*TM 9-2330-202-13&P

TECHNICAL MANUAL
FOR

OPERATOR AND FIELD MAINTENANCE MANUAL INCLUDING REPAIR PARTS AND SPECIAL TOOLS LIST (RPSTL)
FOR
TRAILER, CARGO, 3/4-TON, 2-WHEEL
M101A1 (2330-00-898-6779)
M101A2 (2330-01-102-4697)
M101A3 (2330-01-372-5641)
TRAILER, CHASSIS, 3/4-TON, 2-WHEEL
M116A1 (2330-00-898-6780)
M116A2 (2330-01-101-8434)
TRAILER, CHASSIS, 1-TON, 2-WHEEL
M116A3 (2330-01-359-0080)

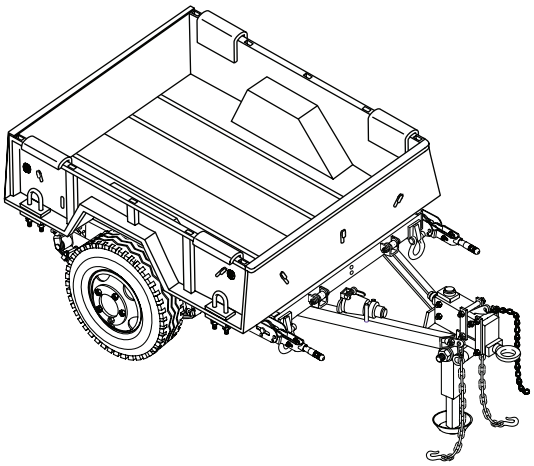

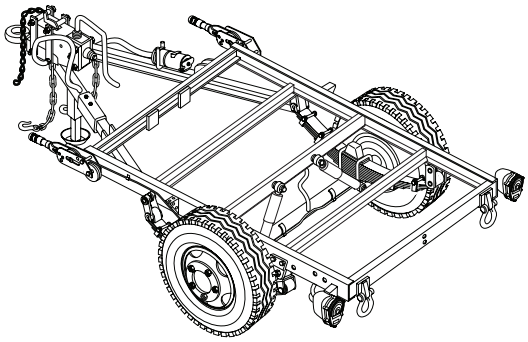

*TM 9-2330-202-13&P dated 30 December 2011 supersedes TM 9-2330-202-14&P, dated 12 May 1997, including all changes.

DISTRIBUTION STATEMENT A - Approved for public release; distribution is unlimited.

HEADQUARTERS, DEPARTMENTS OF THE ARMY
30 DECEMBER 2011

WARNING SUMMARY

This warning summary contains safety precautions and instructions that must be understood and applied during the operation and maintenance of the 3/4-Ton, 2-Wheel Cargo Trailer: M101A1, M101A2 and M101A3, 3/4-Ton, 2-Wheel Chassis Trailer: M116A1 and M116A2 and 1-Ton, 2-Wheel Chassis Trailer: M116A3. These warnings are here to protect personnel against injury, long-term health hazards, or death. Failure to observe these precautions could result in death or serious injury to personnel. Also included are explanations of safety and hazardous materials icons used within the technical manual.

For First Aid information, refer to FM 4-25.11.

EXPLANATION OF SAFETY WARNING ICONS

ELECTRICAL - electrical wire to hand with electricity symbol running through hand shows that shock hazard is present.

FALLING PARTS - arrow bouncing off human shoulder and head shows that falling parts present a danger to life or limb.

FLYING PARTICLES - arrows bouncing off face with face shield shows that particles flying through the air will harm face.

HEAVY OBJECT - human figure stooping over heavy object shows physical injury potential from improper lifting technique.

HEAVY PARTS - hand with heavy object on top shows that heavy parts can crush and harm.

HEAVY PARTS - heavy object pinning human figure against wall shows that heavy, moving parts present a danger to life or limb.

WARNING SUMMARY

SAFETY WARNING DESCRIPTION

WARNING

When troubleshooting electrical system or electrical components, be certain MASTER switch is OFF between every step unless otherwise directed. To prevent injury due to electrical shock, remove all jewelry and metal objects when working on electrical system. Failure to comply may result in death or injury to personnel. Seek medical attention in the event of an injury.

WARNING

Hold tailgate in place before removing or installing straight headed pins. If tailgate is not properly supported it may fall. Failure to comply may result in death or injury to personnel. Seek medical attention in the event of an injury.

WARNING

Wipe excess lubricant from the area of brake shoe linings to prevent grease from soaking the linings. If brake shoe linings become soaked, have Field Maintenance replace them. Failure to comply may cause brakes to malfunction resulting in death or injury to personnel. Seek medical attention in the event of an injury.

WARNING SUMMARY

SAFETY WARNING DESCRIPTION - Continued

WARNING

- Side rack assembly weighs 100 lb (45 kg). Use extreme caution and get assistance when handling. Failure to comply may result in death or injury to personnel. Seek medical attention in the event of an injury.
- Wheel assembly weighs 200 lb (90.8 kg). Two people are required to lift wheel. Failure to comply may result in death or injury to personnel. Seek medical attention in the event of an injury.
- Cargo body weighs over 500 lb (226.8 kg). Use suitable lifting device. Failure to comply may result in death or injury to personnel. Seek medical attention in the event of an injury.
- Tailgate weighs over 100 lb (45 kg). Use suitable lifting device. Failure to comply may result in death or injury to personnel. Seek medical attention in the event of an injury.
- Axle weighs over 100 lb (45 kg). Use suitable lifting device. Failure to comply may result in death or injury to personnel. Seek medical attention in the event of an injury.
- Spring weighs over 100 lb (45 kg). Use suitable lifting device. Failure to comply may result in death or injury to personnel. Seek medical attention in the event of an injury.
- Canvas cover weighs over 100 lb (45 kg). Use suitable lifting device. Failure to comply may result in death or injury to personnel. Seek medical attention in the event of an injury.

WARNING

- Wear eye protection when driving heads off screws or rivets. Failure to comply may result in death or injury to personnel. Seek medical attention in the event of an injury.
- Compressed air used for cleaning or drying purposes, or for clearing restrictions, should never exceed 30 psi (207 kPa). Wear protective clothing (goggles/shield, gloves, etc.) and use caution to avoid injury to personnel. Failure to comply may result in death or injury to personnel. Seek medical attention in the event of an injury.

WARNING SUMMARY

SAFETY WARNING DESCRIPTION - Continued

WARNING


- If trailer is not coupled to prime mover, make sure handbrakes are applied and wheels are chocked securely. Failure to comply may result in death or injury to personnel. Seek medical attention in the event of an injury.
- Rear stabilizer must be used if trailer is carrying a load. Failure to comply may cause trailer to tip, resulting in death or injury to personnel. Seek medical attention in the event of an injury.
- Make sure load weight is evenly distributed. Too much weight at the front will make trailer difficult to lift. Too much weight at the rear will cause trailer to tip backward. Failure to comply may result in death or injury to personnel. Seek medical attention in the event of an injury.
- Do not stand between prime mover and trailer when backing prime mover. Failure to comply may result in death or injury to personnel. Seek medical attention in the event of an injury.
- If load has shifted, make sure it is evenly distributed before removing drawbar coupler from pintle hook. Failure to comply may result in death or injury to personnel. Seek medical attention in the event of an injury.
- DO NOT use a brake drum that exceeds maximum wear specifications. Failure to comply may result in death or injury to personnel. Seek medical attention in the event of an injury.
- When performing maintenance on brake system, make sure wheels are securely chocked. Failure to comply may cause trailer to roll, resulting in death or injury to personnel. Seek medical attention in the event of an injury.
- Trailer must be supported by blocking or support stands placed under axle or frame throughout maintenance procedure. Failure to comply may result in death or injury to personnel. Seek medical attention in the event of an injury.

WARNING SUMMARY

SAFETY WARNING DESCRIPTION - Continued

WARNING


- If one brake shoe is being replaced, replace all brake shoes on axle. The combination of old brake shoes with new brake shoes will cause uneven braking. Failure to comply may result in death or injury to personnel. Seek medical attention in the event of an injury.
- Rear stabilizer MUST be used during loading and unloading when trailer is not coupled to prime mover. Failure to comply may cause trailer to tip, resulting in death or injury to personnel. Seek medical attention in the event of an injury.
- Make sure that weight of trailer is on front support (landing) leg or trailer is coupled to prime mover before raising rear stabilizer. Failure to comply may cause trailer to tip, resulting in death or injury to personnel. Seek medical attention in the event of an injury.
- All personnel must stand clear of prime mover and trailer during coupling operation. Failure to comply may result in death or injury to personnel. Seek medical attention in the event of an injury.
- DO NOT move trailer laterally (push/pull) using the landing leg as a third wheel. Failure to comply may result in death or injury to personnel. Seek medical attention in the event of an injury.
- Use ground guides and back prime mover to the trailer lunette. Failure to comply may result in death or injury to personnel. Seek medical attention in the event of an injury.
- Two personnel are required to help guide the cargo body to and from frame. Failure to comply may result in death or injury to personnel. Seek medical attention in the event of an injury.
- DO NOT move trailer laterally (push/pull) using the landing leg as a third wheel. Failure to comply may result in death or injury to personnel. Seek medical attention in the event of an injury.
- Use ground guides and back prime mover to the trailer lunette. Failure to comply may result in death or injury to personnel. Seek medical attention in the event of an injury.
- Two personnel are required to help guide the cargo body to and from frame. Failure to comply may result in death or injury to personnel. Seek medical attention in the event of an injury.

WARNING SUMMARY

SAFETY WARNING DESCRIPTION - Continued

WARNING

- Drawbar weighs up to 280 lb (127 kg) loaded tongue weight. Use front support (landing) leg crank to raise and lower trailer drawbar. If support leg assembly is inoperative, use suitable lifting device to lift the drawbar. If a suitable lifting device is not available, remove load from trailer and use four or more persons to lift drawbar. Failure to comply may result in death or injury to personnel. Seek medical attention in the event of an injury.
- Keep hands away from lunette ring during coupling operations. Use the landing leg crank to lower or raise lunette. Realign prime mover tow pintle with lunette as necessary. Failure to comply may result in death or injury to personnel. Seek medical attention in the event of an injury.

WARNING SUMMARY

EXPLANATION OF HAZARDOUS MATERIAL ICONS

CHEMICAL - drops of liquid on hand shows that the material will cause burns or irritation to human skin or tissue.

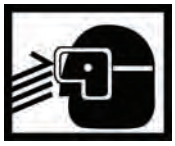

EYE PROTECTION - person with goggles shows that the material will injure the eyes.

FIRE - flame shows that a material may ignite and cause burns.

VAPOR - human figure in a cloud shows that material vapors present a danger to life or health.

WARNING SUMMARY

HAZARDOUS MATERIAL WARNING DESCRIPTION

WARNING


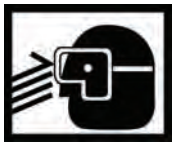

- Solvent cleaning compound MIL-PRF-680 may be irritating to the eyes and skin. Use protective gloves and goggles. First aid for skin contact: remove contaminated clothing. Wash skin thoroughly with soap and water. First aid for eye contact: flush with water until irritation subsides. If symptoms persist, seek medical attention. Failure to comply may result in death or injury to personnel. Seek medical attention in the event of an injury.
- Use solvent cleaning compound MIL-PRF-680 in a well ventilated area. Use respirator as needed. Accidental ingestion can cause irritation of digestive tract and respiratory tract. May cause lung and central nervous system damage. Can be fatal if swallowed. Inhalation of high/massive concentrations can cause coma or be fatal. First aid for ingestion: do not induce vomiting. Seek immediate medical attention. First aid for inhalation: move to fresh air. If not breathing, provide artificial respiration. If symptoms persist, seek medical attention. Failure to comply may result in death or injury to personnel. Seek medical attention in the event of an injury.
- MIL-PRF-680 solvent is combustible; DO NOT use or store near heat, sparks, flame, or other ignition sources. Use mechanical ventilation whenever product is used in a confined space, heated above ambient temperatures, or agitated. Keep container sealed when not in use. Failure to comply may result in death or injury to personnel. Seek medical attention in the event of an injury.
- Improper cleaning methods and use of unauthorized cleaning liquids or solvents can injure personnel and damage equipment. Failure to comply may result in death or injury to personnel. Seek medical attention in the event of an injury.
- Rags saturated with solvent cleaning compound must be disposed of IAW authorized facility procedures. Failure to comply may result in death or injury to personnel. Seek medical attention in the event of an injury.
- Solvent cleaning compound MIL-PRF-680 is toxic and flammable. Always wear protective goggles and gloves, and use only in a well-ventilated area. Avoid contact with skin, eyes, and clothes, and DO NOT breathe vapors. DO NOT use near open flame or excessive heat. Failure to comply may result in death or injury to personnel. Seek medical attention in the event of an injury.

WARNING SUMMARY

HAZARDOUS MATERIAL WARNING DESCRIPTION - Continued

WARNING


- DO NOT handle brake shoes, brake drums, or other brake components unless area has been properly cleaned. Dust, which can be dangerous if you breathe it, may be on these components. Wear an approved filter mask and gloves. NEVER use compressed air or a dry brush to clean brake components. Clean dust or mud away from brake components with water and a wet, soft brush or cloth. Failure to comply may result in death or injury to personnel. Seek medical attention in the event of an injury.
- Accidental or intentional introduction of liquid contaminants into the environment is a violation of state, federal, and military regulations. Refer to local environmental office for information concerning storage, use, and disposal of these liquids. Failure to comply may cause damage to environment and health of personnel. Seek medical attention in the event of an injury.

WARNING


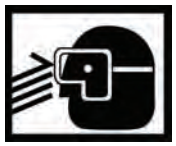

Avoid contact with live steam, which can burn skin, cause blindness, and cause other serious injury. Be sure to wear protective apron, gloves, and safety goggles around live steam. Failure to comply may result in death or injury to personnel. Seek medical attention in the event of an injury.

LIST OF EFFECTIVE PAGES/WORK PACKAGES

NOTE: TM 9-2330-202-13&P, dated 30 December 2011 supersedes TM 9-2330-202-14&P, dated 12 May 1997, including all changes. Zero in the "Change No." column indicates an original page or work package.

Date of issue for the original manual is:

Original 30 December 2011

TOTAL NUMBER OF PAGES FOR FRONT AND REAR MATTER IS 47 AND THE TOTAL NUMBER OF WORK PACKAGES IS 115, CONSISTING OF THE FOLLOWING:

Page/WP No.	Change No.	Page/WP No.	Change No.
Front Cover (2 pages)	0	WP 0033 (2 pages)	0
Warning Summary (10 pages)	0	Chp 6 title page	0
i-xvi (16 pages)	0	WP 0034 (2 pages)	0
Chp 1 title page	0	Chp 7 title page	0
WP 0001 (4 pages)	0	WP 0035 (4 pages)	0
WP 0002 (12 pages)	0	WP 0036 (8 pages)	0
WP 0003 (4 pages)	0	WP 0037 (4 pages)	0
Chp 2 title page	0	WP 0038 (6 pages)	0
WP 0004 (2 pages)	0	WP 0039 (6 pages)	0
WP 0005 (22 pages)	0	WP 0040 (4 pages)	0
WP 0006 (4 pages)	0	WP 0041 (4 pages)	0
WP 0007 (2 pages)	0	WP 0042 (4 pages)	0
Chp 3 title page	0	WP 0043 (2 pages)	0
WP 0008 (2 pages)	0	WP 0044 (8 pages)	0
WP 0009 (2 pages)	0	WP 0045 (10 pages)	0
WP 0010 (2 pages)	0	WP 0046 (8 pages)	0
WP 0011 (2 pages)	0	WP 0047 (2 pages)	0
WP 0012 (2 pages)	0	WP 0048 (2 pages)	0
WP 0013 (2 pages)	0	WP 0049 (4 pages)	0
WP 0014 (2 pages)	0	WP 0050 (16 pages)	0
Chp 4 title page	0	WP 0051 (4 pages)	0
WP 0015 (2 pages)	0	WP 0052 (8 pages)	0
WP 0016 (2 pages)	0	WP 0053 (4 pages)	0
WP 0017 (4 pages)	0	WP 0054 (8 pages)	0
WP 0018 (4 pages)	0	WP 0055 (8 pages)	0
WP 0019 (2 pages)	0	WP 0056 (2 pages)	0
WP 0020 (2 pages)	0	WP 0057 (2 pages)	0
WP 0021 (2 pages)	0	WP 0058 (8 pages)	0
WP 0022 (2 pages)	0	WP 0059 (2 pages)	0
WP 0023 (2 pages)	0	WP 0060 (2 pages)	0
WP 0024 (2 pages)	0	WP 0061 (4 pages)	0
WP 0025 (2 pages)	0	WP 0062 (4 pages)	0
WP 0026 (2 pages)	0	WP 0063 (4 pages)	0
WP 0027 (2 pages)	0	WP 0064 (2 pages)	0
WP 0028 (2 pages)	0	WP 0065 (8 pages)	0
WP 0029 (4 pages)	0	WP 0066 (4 pages)	0
WP 0030 (2 pages)	0	WP 0067 (4 pages)	0
Chp 5 title page	0	WP 0068 (4 pages)	0
WP 0031 (2 pages)	0	WP 0069 (2 pages)	0
WP 0032 (8 pages)	0	WP 0070 (2 pages)	0

LIST OF EFFECTIVE PAGES/WORK PACKAGES

Page/WP No.	Change No.	Page/WP No.	Change No.
WP 0071 (2 pages)	0	WP 0095 (4 pages)	0
WP 0072 (2 pages)	0	WP 0096 (4 pages)	0
WP 0073 (4 pages)	0	WP 0097 (4 pages)	0
WP 0074 (2 pages)	0	WP 0098 (4 pages)	0
WP 0075 (4 pages)	0	WP 0099 (4 pages)	0
WP 0076 (4 pages)	0	WP 0100 (4 pages)	0
WP 0077 (10 pages)	0	WP 0101 (6 pages)	0
WP 0078 (10 pages)	0	WP 0102 (4 pages)	0
WP 0079 (6 pages)	0	WP 0103 (4 pages)	0
WP 0080 (2 pages)	0	WP 0104 (4 pages)	0
Chp 8 title page	0	WP 0105 (4 pages)	0
WP 0081 (8 pages)	0	WP 0106 (2 pages)	0
WP 0082 (8 pages)	0	WP 0107 (6 pages)	0
WP 0083 (4 pages)	0	WP 0108 (6 pages)	0
WP 0084 (4 pages)	0	Chp 9 title page	0
WP 0085 (4 pages)	0	WP 0109 (4 pages)	0
WP 0086 (4 pages)	0	WP 0110 (4 pages)	0
WP 0087 (4 pages)	0	WP 0111 (6 pages)	0
WP 0088 (4 pages)	0	WP 0112 (2 pages)	0
WP 0089 (4 pages)	0	WP 0113 (2 pages)	0
WP 0090 (4 pages)	0	WP 0114 (4 pages)	0
WP 0091 (4 pages)	0	WP 0115 (2 pages)	0
WP 0092 (4 pages)	0	INDEX-1 – INDEX-4	0
WP 0093 (4 pages)	0	Back Cover	0
WP 0094 (4 pages)	0		

HEADQUARTERS,
DEPARTMENTS OF THE ARMY
Washington, DC, 30 December 2011

TECHNICAL MANUAL

FOR OPERATOR AND FIELD MAINTENANCE MANUAL
INCLUDING REPAIR PARTS AND SPECIAL TOOLS LIST (RPSTL) FOR

TRAILER, CARGO, 3/4-TON, 2-WHEEL
M101A1
NSN 2330-00-898-6779
M101A2
NSN 2330-01-102-4697
M101A3
NSN 2330-01-372-5641

TRAILER, CHASSIS, 3/4-TON, 2-WHEEL
M116A1
NSN 2330-00-898-6780
M116A2
NSN 2330-01-101-8434

TRAILER, CHASSIS, 1-TON, 2-WHEEL
M116A3
NSN 2330-01-359-0080

REPORTING ERRORS AND RECOMMENDING IMPROVEMENTS

You can help improve this publication. If you find any errors, or if you would like to recommend any improvements to the procedures in this publication, please let us know. The preferred method is to submit your DA Form 2028 (Recommended Changes to Publications and Blank Forms) through the Internet on the TACOM Unique Logistics Support Applications (TULSA) Web site. The Internet address is https://tulsa.tacom.army.mil. Access to all applications requires CAC authentication, and you must complete the Access Request form the first time you use it. The DA Form 2028 is located under the TULSA Applications on the left-hand navigation bar. Fill out the form and click on SUBMIT. Using this form on the TULSA Web site will enable us to respond more quickly to your comments and to better manage the DA Form 2028 program. You may also mail, e-mail, or fax your comments or DA Form 2028 directly to the U.S. Army TACOM Life Cycle Management Command. The postal mail address is U.S. Army TACOM Life Cycle Management Command, ATTN: AMSTA-LCL-MPP / TECH PUBS, MS 727, 6501 E. 11 Mile Road, Warren, MI 48397-5000. The e-mail address is tacomlcmc.daform2028@us.army.mil. The fax number is DSN 786-1856 or Commercial (586) 282-1856. A reply will be furnished to you.

CURRENT AS OF - 01 August 2011.

***SUPERSEDURE NOTICE** - *TM 9-2330-202-13&P, dated 30 December 2011 supersedes TM 9-2330-202-14&P, dated 12 May 1997, including all changes.

TABLE OF CONTENTS

TABLE OF CONTENTS - Continued

TABLE OF CONTENTS - Continued

TABLE OF CONTENTS - Continued

Page No.
WP Sequence No.

TABLE OF CONTENTS - Continued

TABLE OF CONTENTS - Continued

Page No.
WP Sequence No.

TABLE OF CONTENTS - Continued

TABLE OF CONTENTS - Continued

Page No.
WP Sequence No.

TABLE OF CONTENTS - Continued

TABLE OF CONTENTS - Continued

Page No.
WP Sequence No.

TABLE OF CONTENTS - Continued

TABLE OF CONTENTS - Continued

HOW TO USE THIS MANUAL

This manual contains instructions for safe and efficient operation of M101 Series and M116 Series trailers. These instructions provide the user with a general knowledge of the equipment, characteristics, and operating procedures. Troubleshooting and maintenance procedures are provided at Operator and Field Maintenance levels. Supporting Information WPs at the rear of the manual serve the same function and contain the same information as appendices in older manuals.

WARNINGS, CAUTIONS, AND NOTES

Warning, caution, and note headings, and certain essential information, are printed in bold type for clarity. This is critical data to ensure personal safety, prevent damage to the vehicle, and clarify unique data or procedures used.

CHAPTER 1 - GENERAL INFORMATION, EQUIPMENT DESCRIPTION, AND THEORY OF OPERATION

This chapter describes, locates, and illustrates M101 Series and M116 Series trailers and its components. General information needed for maintaining records and reporting equipment recommendations are listed. Also listed in this chapter is a table of specific equipment data.

CHAPTER 2 - OPERATOR INSTRUCTIONS

This chapter describes, locates, and illustrates the M101 Series and M116 Series trailers' controls and indicators. There are instructions for coupling, driving, stopping, and backing in both usual and unusual conditions, and other information to help you understand and better operate the M101 Series and M116 Series trailers.

CHAPTER 3 - TROUBLESHOOTING PROCEDURES

The troubleshooting index lists the common malfunctions/symptoms, which you find during use of the M101 Series and M116 Series trailers. You should perform the troubleshooting and corrective actions in the order listed within each individual work package. The troubleshooting index is a quick reference to the troubleshooting work packages.

CHAPTER 4 - PMCS MAINTENANCE INSTRUCTIONS

This chapter contains Preventive Maintenance Checks and Services (PMCS) instructions to provide the required care to keep the M101 Series and M116 Series trailers in good operating condition.

CHAPTER 5 - OPERATOR MAINTENANCE INSTRUCTIONS

This chapter contains operator maintenance detailed instructions.

CHAPTER 6 - FIELD MAINTENANCE INSTRUCTIONS

This chapter contains all of the maintenance authorized to be performed by Field Maintenance. Included are Service Upon Request of Material, Field Preventive Maintenance Instructions, and detailed maintenance tasks that Field Maintenance personnel may perform to maintain the M101 Series and M116 Series trailers.

HOW TO USE THIS MANUAL

CHAPTER 7 - PARTS INFORMATION

This chapter covers the Repair Parts and Special Tools List (RPSTL) for the M101 Series and M116 Series trailers. It includes instructions and descriptions needed to effectively use this RPSTL.

CHAPTER 8 - SUPPORTING INFORMATION

This chapter includes supporting information pertaining to the M101 Series and M116 Series trailers. It includes the Maintenance Allocation Chart, Components of End Item and Basic Issue Items Lists, along with other important information.

CHAPTER 1

GENERAL INFORMATION, EQUIPMENT DESCRIPTION, AND THEORY OF OPERATION

OPERATOR MAINTENANCE
GENERAL INFORMATION

SCOPE

This manual describes Operator and Field Maintenance and contains the Repair Parts and Special Tools List (RPSTL) for the following:

Trailer, Cargo: 3/4-Ton, 2-Wheel, M101A1, M101A2 and M101A3;
Trailer, Chassis: 3/4-Ton, 2-Wheel, M116A1 and M116A2;
Trailer, Chassis: 1-Ton, 2-Wheel, M116A3.

All M101 Series cargo trailers use the M116 Series chassis.

Throughout this manual, the terms "curbside" and "roadside" are used to describe views of the trailer. As viewed from the rear, curbside is the right side and roadside is the left side.

The trailers are used to carry payloads over highway or cross-country.

MAINTENANCE FORMS, RECORDS AND REPORTS

Department of the Army forms and procedures used for equipment maintenance will be those prescribed by DA PAM 750-8, The Army Maintenance Management System (TAMMS) Users Manual.

REPORTING EQUIPMENT IMPROVEMENT RECOMMENDATIONS (EIR)

If your trailer needs improvement, let us know. Send us an EIR. You, the user, are the only one who can tell us what you do not like about your equipment. Let us know why you do not like the design or performance. If you have Internet access, the easiest and fastest way to report problems or suggestions is to follow the instructions and links below:

For ALL non-Aviation/Missile Warranty, EIR and PQDRs must be submitted through the Web Product Quality Deficiency Reporting (PQDR) site. Note that all CECOM managed (B16), including aviation, items must also be submitted through the following site.

The Web PQDR Web site is:
http://www.nslcptsmh.csd.disa.mil/webpqdr/webpqdr.htm
New accounts can be established at the following address:
http://www.nslcptsmh.csd.disa.mil/accessforms/uarform.htm

All AMCOM (Aviation and Missile Command) Deficiency Reports (DRs), (Warranty, EIR, and PQDRs) must be submitted through the Joint Deficiency Reporting System (JDRS) at:
https://jdrs.mil/DR_Initiate.cfm?service=AR

You may also submit your information using an SF 368 (Product Quality Deficiency Report). You can send your SF 368 using e-mail, regular mail, or fax using the addresses/fax numbers specified in DA PAM 750-8, The Army Maintenance Management System (TAMMS) Users Manual. We will send you a reply.

DESTRUCTION OF MATERIEL TO PREVENT ENEMY USE

For information and instructions covering destruction of Army Materiel, refer to TM 750-244-6 Procedures for Destruction of Equipment to Prevent Enemy Use (Mobility Equipment Command).

PREPARATION FOR STORAGE OR SHIPMENT

For information on preparing the trailers for storage or shipment, refer to (WP 0075).

REFERENCE INFORMATION

List of Abbreviations/Acronyms

AAL	Additional Authorization List
BII	Basic Issue Items
BOI	Basis of Issue
CAGEC	Commercial and Government Entity Code
CARC	Chemical Agent Resistant Coating
COEI	Components of End Item
CPC	Corrosion Prevention and Control
CTC	Common Table of Allowances
CUCV	Commercial Utility Cargo Vehicle
DA	Department of Army
DoD	Department of Defense
E	Empty
EIR	Equipment Improvement Recommendation
GAA	Grease, Automotive and Artillery
HMMWV	High-Mobility Multipurpose Wheeled Vehicle
hr	Hour
IAW	In Accordance With
in	Inch
JTA	Joint Table of Allowances
kph	Kilometers Per Hour
l	Liter
lb	Pound
LED	Light-Emitting Diode
MAC	Maintenance Allocation Chart
MOS	Military Occupational Specialty
mph	Miles Per Hour
MTOE	Modified Table of Organization and Equipment
MWO	Modification Work Order
N•m	Newton Meter
NBC	Nuclear, Biological and Chemical
NIIN	National Item Identification Number
NSN	National Stock Number
OC	On Condition
PMCS	Preventive Maintenance Checks and Services
qty	Quantity
QTY. RECM	Quantity Recommended
QTY. RQR	Quantity Required
RPSTL	Repair Parts and Special Tools List
SMR	Source, Maintenance, and Recoverability
SN	Serial Number
SOP	Standard Operating Procedure
SRA	Specialized Repair Activity
TAMMS	The Army Maintenance Management System
TB	Technical Bulletin
TDA	Table of Distribution and Allowances
TM	Technical Manual
TMDE	Test, Measurement, and Diagnostic Equipment
TOE	Table of Organization and Equipment
U/M	Unit of Measure
UOC	Usable-On Code

REFERENCE INFORMATION - Continued

VDC	Volts, Direct Current
W/	With
W/O	Without

QUALITY ASSURANCE

No specific quality assurance manual pertains to the M101 or M116 Series of trailers.

Defective material received through the supply system should be reported on an SF Form 368. Instructions for preparing the reports are provided in AR 702-7, Product Quality Deficiency Report Program (DLAR 4155.24; SECNAVINST 4855.5A; AFR 74-6). Mail your completed form directly to:

Commander
U.S. Army Tank-automotive and Armaments Command
ATTN: AMSTA-TR-E/MPA
Warren, MI 48397-5000

WARRANTY INFORMATION

The M101 and M116 Series trailers are not warranted.

SAFETY, CARE AND HANDLING

For information on general safety precautions and regulations, review the warning summary at the front of this manual preceding the table of contents. Observe all WARNINGs and CAUTIONs that appear in the maintenance procedures.

CORROSION PREVENTION AND CONTROL

Corrosion prevention and control (CPC) of Army materiel is a continuing concern. It is important that any corrosion problem with this item be reported so the problem can be corrected and improvements can be made to prevent the problem in future items.

While corrosion is typically associated with the rusting of metals, it can also include deterioration of other materials, such as rubber and plastic. Unusual cracking, softening, swelling, or breaking of these materials may be a corrosion problem.

If a corrosion problem is identified, it can be reported using an SF Form 368. The use of key words, such as "corrosion,""rust," "deterioration," and "cracking," will ensure that the information is identified as a CPC problem. The form should be submitted to the address specified in DA PAM 750-8.

END OF WORK PACKAGE

OPERATOR MAINTENANCE
EQUIPMENT DESCRIPTION AND DATA

EQUIPMENT CHARACTERISTICS, CAPABILITIES AND FEATURES

a. Characteristics

1. All trailers are designed to be towed by a prime mover without air brake connections. A handbrake lever and cable assembly located on each side of the trailer activates a handbrake at each wheel. Control of each handbrake is independent.
2. In addition to handbrake lever-activated handbrakes, the trailers are equipped with an inertia-actuated hydraulic brake system. For principles of operation of this system, refer to (WP 0003).
3. All trailers have a single axle with two wheels.
4. The trailer suspension consists of two leaf spring assemblies and shock absorbers.
5. The M116A3 is equipped with a dropped axle, frame, and spring assemblies that allow for a greater payload than the other models. M101A1 is equipped with tube type, bias ply tires with 5 lug mounted wheels. A2 and A3 models are equipped with surge brakes. A2 models use the 8 lug CUCV style tubeless wheels and tires. A3 models use run flat tires.
6. The cargo body, which is a feature of M101 Series trailers, can be easily removed. The old-style cargo body is being phased out. The new-style cargo body adds reinforcements and U-bolt lift points to ensure that the cargo body can be lifted without danger and without using spreader bars.
7. A rear stabilizer may be added to provide greater stability when the trailer is carrying generator sets. Use of the stabilizer is optional for all other applications.

b. Capabilities and Features

1. Maximum towing speeds with maximum payload evenly distributed are: highway, 50 mph (80 kph); and cross-country, 6 mph (10 kph).
2. Maximum payload varies with model designation.
3. The cargo capacity of the M101 Series trailers may be increased by installing a rack and tailgate assembly. A canvas cover assembly may be used to protect cargo from the weather.

b. Capabilities and Features - Continued

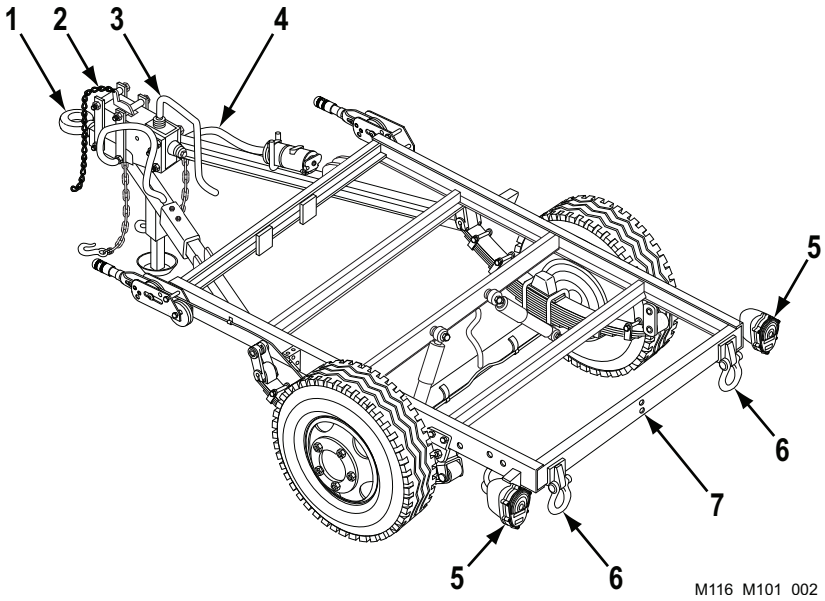

Figure 1. Chassis.

Table 1. Chassis Components.

Key	Component	Description
1	Drawbar Coupler	Couples trailer to prime mover pintle.
2	Breakaway Chain (All except M101A1 and M116A1)	Provides for emergency braking of trailer. Attaches to prime mover and applies brakes in the event trailer breaks away from prime mover.
3	Hydraulic Brake Actuator Assembly	Transmits braking forces from prime mover to trailer and service brakes by means of a drawbar coupler, master cylinder, hydraulic brake tubes and hose, and wheel cylinders.
4	Intervehicular Cable	Provides electrical connection between trailer and prime mover.
5	Composite Light	Indicates trailer presence to vehicles traveling behind. Consists of blackout light, service light, turn signal, and stoplight. Located at each side of trailer rear.
6	Tiedown Shackles	Secures trailer during shipment. Located at each front and rear corner of chassis.
7	Chassis	Provides mounting for cargo body of M101 Series trailers. Frame assembly common to all models.

b. Capabilities and Features - Continued

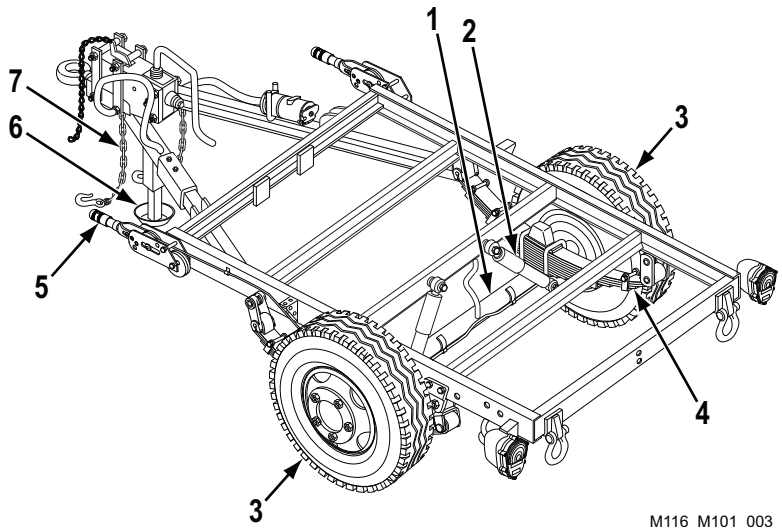

Figure 2. Suspension.

Table 2. Suspension Components.

Key	Component	Description
1	Axle	Carries wheels and allows wheels to rotate. Tubular weldment on which trailer wheels and suspension components are mounted.
2	Shock Absorber	Dampens spring action. Located on each end of axle.
3	Wheel Assembly	Supports trailer load. Attached to each end of axle.
4	Spring Assembly	Supports trailer load and absorbs road shock. Located on each side of frame.
5	Handbrake Lever	Applies handbrake when trailer is stopped or parked. Located on each side of chassis.
6	Front Support Leg	Supports trailer when uncoupled from prime mover. All trailers have an adjustable front support leg.
7	Safety Chain	Prevents trailer from fully breaking away. Hooks to prime mover shackles. Located on each side of drawbar assembly.

b. Capabilities and Features - Continued

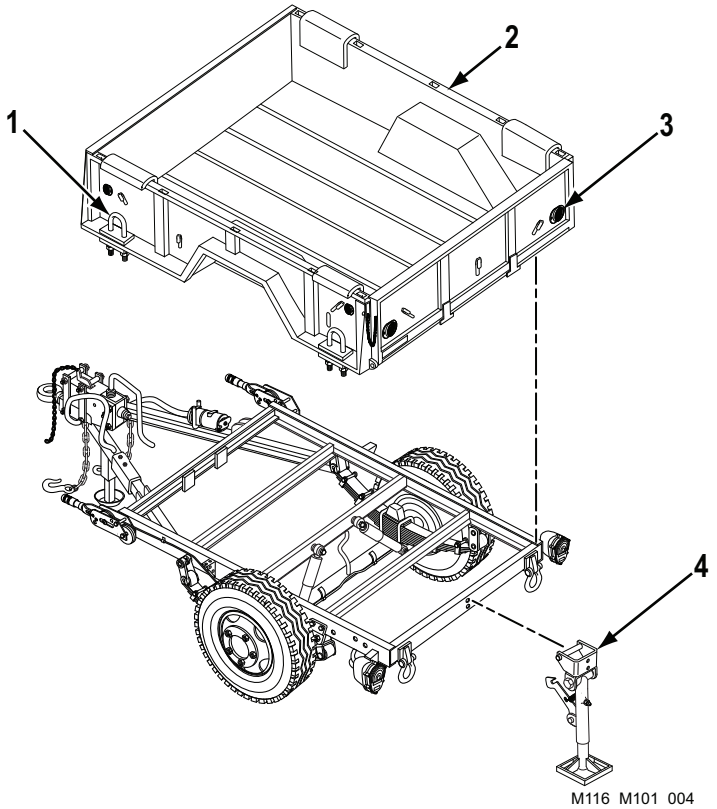

Figure 3. Stabilizer and Cargo Body.

Table 3. Stabilizer and Cargo Body Components.

Key	Component	Description
1	U-bolt (M101A2 and M101A3)	Provides lift points for new-style cargo body. Located at each of four lower corners of cargo body.
2	Cargo Body (M101A2 and M101A3)	Carries cargo. A welded box assembly attached to frame.
3	Reflector (M101A2 and M101A3)	Indicates trailer presence to vehicles traveling behind. Located at lower corners of all sides of cargo body.
4	Rear Stabilizer	Prevents trailer from tipping over when loading and unloading cargo. Required when trailer is carrying a load.

b. Capabilities and Features - Continued

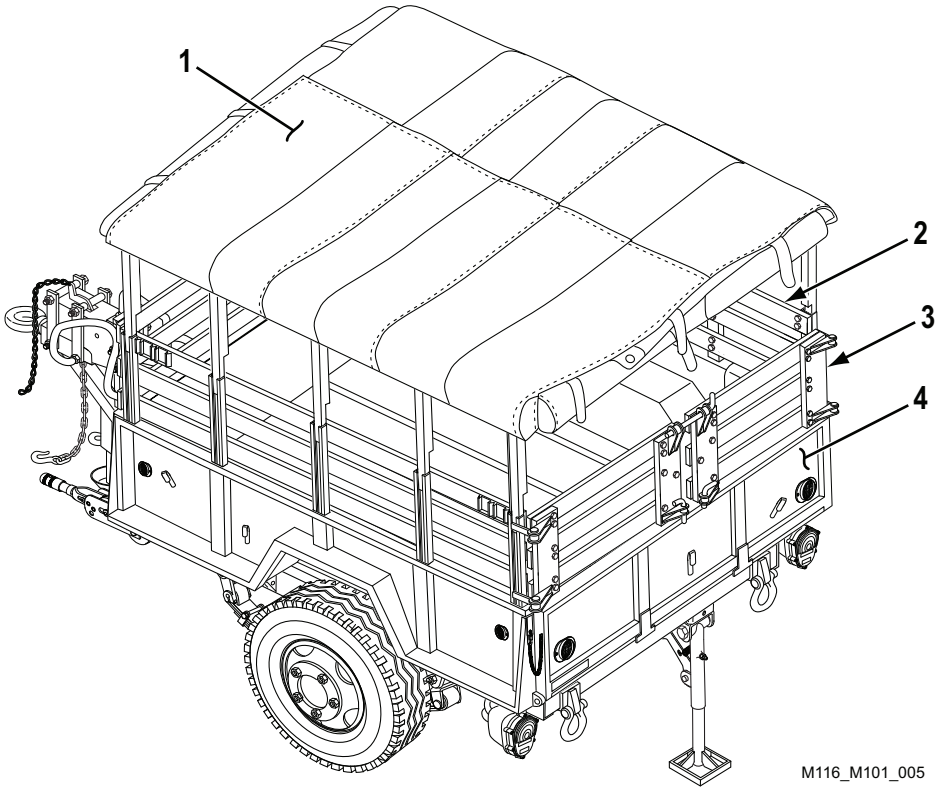

Figure 4. Cover and Tailgate Assembly.

Table 4. Cover and Tailgate Components.

Key	Component	Description
1	Canvas Cover Assembly (M101A2 and M101A3)	Protects cargo from weather.
2	Rack Assembly (M101A2 and M101A3)	Increases cargo volume capacity. Consists of one front rack assembly, two side rack assemblies, and a two-section rear assembly. Earlier-model rack assemblies are wooden. Newer-model rack assemblies are made of composite material.
3	Rear Rack Assembly (M101A2 and M101A3)	Opens outward from center for ease in loading and unloading cargo. This two-section hinged assembly is a component of the rack assembly. Earlier-model assemblies are wooden. Newer-model assemblies are made of composite material.
4	Tailgate (M101A2 and M101A3)	Swings down for ease in loading and unloading cargo. This one-piece tailgate is secured in position by two chain and pin assemblies.

b. Capabilities and Features - Continued

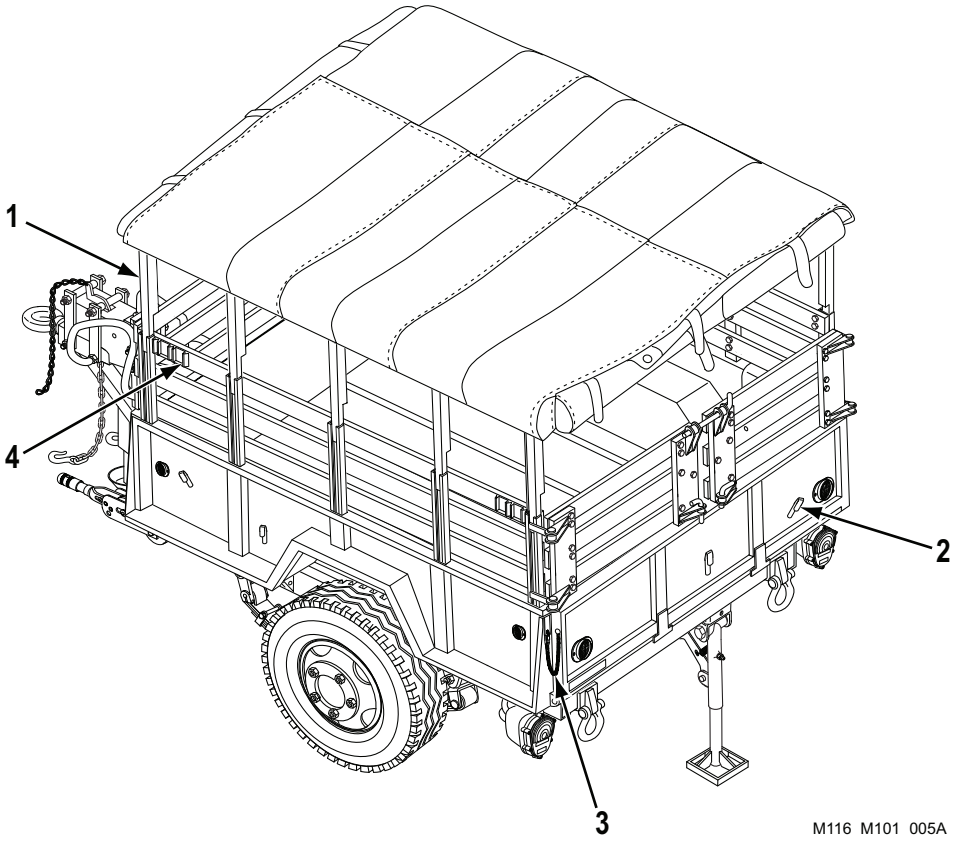

Figure 5. Bow Assembly.

Table 5. Bow Assembly Components.

Key	Component	Description
1	Bow Assembly (M101A2 and M101A3)	Supports canvas cover assembly. Five bow assemblies fit across rack assembly. Earlier-model bow assemblies are wooden. Newer-model bow assemblies are made of steel.
2	Cargo Hook (M101A2 and M101A3)	Secures canvas cover assembly to the cargo body. Located on all four sides of cargo body (six on front and rear, eight on roadside and curbside).
3	Chain and Pin Assembly (M101A2 and M101A3)	Secures cargo body tailgate in position. Located at both upper rear corners of cargo body.
4	Bow Clip (M101A2 and M101A3)	Stows bow assemblies. Located on front corner of each side rack assembly.

c. Differences Between Models

1. Differences between trailers consist of configuration variations in the electrical system, axle, brakes, wheels, frame, and suspension.
2. The major trailer differences are summarized in Table 6.

Table 6. Differences Between Models.

Model	Axle	Inertia Brake System	Wheels/Tires	Frame	Spring Leaves
M101A1	Straight	No	Tubeless/Radial	3 in (7.62 cm)	5
M101A2	Straight	Yes	Tubeless/Radial	3 in (7.62 cm)	5
M101A3	Offset	Yes	Tubeless/ Runflat/Radial	4 in (10.16 cm)	6
M116A1	Straight	No	Tubeless/Radial	3 in (7.62 cm)	5
M116A2	Straight	Yes	Tubeless/Radial	3 in (7.62 cm)	5
M116A3	Offset	Yes	Tubeless/ Runflat/Radial	4 in (10.16 cm)	6

d. Equipment Data

Table 7. Equipment Data.

DESCRIPTION	DATA
DATA COMMON TO ALL MODELS	
ELECTRICAL SYSTEM	24 VDC
AXLE	Tubular Weldment
ANGLE OF DEPARTURE	30°
TIRES	
Quantity	2
Ply	8
Size	9 x 16 in (23 x 41 cm)
Inflation Pressure Sand and Highway:	
M101A1, M101A2, M116A1, M116A2 (Tubeless/Radial)	30 psi (207 kPa)
M101A3, M116A3 (Runflat)	27 psi (186 kPa)

d. Equipment Data - Continued

Table 7. Equipment Data - Continued.

DESCRIPTION	DATA
WHEELS	
Rim Size	16 x 6.5 in (43 x 16 cm)
SUSPENSION	
Spring Assemblies	Semi-elliptical
Shock Absorbers	Hydraulic, Double-acting
HANDBRAKES	
Actuation	Mechanical
Location	Front of Frame
Quantity	2
TOWING INFORMATION	
Towing Attachment	Drawbar Coupler
Prime Mover	CUCV Series, HMMWV Series, 2-1/2 Ton series, 5 Ton series
TOWING SPEEDS	
Highway	50 mph (80 kph)
Cross-country	6 mph (10 kph)
M101A1, M101A2, M101A3, M116A1, AND M116A2	
GENERAL	
Center of Gravity (Measured from Center of Rear Axle):	
Empty	45-3/4 in (116.21 cm)
Loaded	36-1/4 in (92.08 cm)
Shipping Volume of Chassis Trailer	213 cu ft (5.96 cu m)
Shipping Volume of Cargo Trailer	520 cu ft (14.56 cu m)

d. Equipment Data - Continued

Table 7. Equipment Data - Continued.

DESCRIPTION	DATA
DIMENSIONS	
Overall:	
Length	147 in (373.38 cm)
Width	73.5 in (186.69 cm)
Height of Chassis	35 in (88.9 cm)
Height of Cargo Trailer (M101A1, M101A2 and M101A3):	
Empty	83 in (210.82 cm)
Loaded	79 in (200.66 cm)
Cargo Body (Old Style):	
Length	76 in (193.04 cm)
Width	65.5 in (166.37 cm)
Height	18 in (45.72 cm)
Tread	72 in (182.88 cm)
Cargo Body (New Style) (M101A2 and M101A3):	
Length	100 in (254 cm)
Width	73.5 in (186.69 cm)
Height	19.84 in (50.39 cm)
WEIGHTS	
Payload (Maximum):	
Cross-country	1500 lb (681 kg)
Highway	2250 lb (1021.5 kg)

d. Equipment Data - Continued

Table 7. Equipment Data - Continued.

DESCRIPTION	DATA
Empty:	
Wheels	1225 lb (556.15 kg)
Front Support Leg	115 lb (52.21 kg)
Total	1340 lb (608.36 kg)
With Payload:	
Wheels	
Cross-country	2640 lb (1198.56 kg)
Highway	3360 lb (1525.44 kg)
Front Support Leg	
Cross-country	200 lb (90.8 kg)
Highway	230 lb (104.42 kg)
Total	
Cross-country	2840 lb (1289.36 kg)
Highway	3590 lb (1629.86 kg)
M116A3	
GENERAL	
Center of Gravity:	
Empty	16 in (40.64 cm)
Loaded	8.2 in (20.83 cm)
Shipping Volume of Chassis Trailer	189 cu ft (5.29 cu m)
DIMENSIONS	
Length	145.7 in (370.08 cm)
Width	81.5 in (207.01 cm)
Height of Chassis	36 in (91.44 cm)

d. Equipment Data - Continued

Table 7. Equipment Data - Continued.

DESCRIPTION	DATA
Tread	81.5 in (207.01 cm)
WEIGHTS	
Payload (Maximum):	2360 lb (1071.44 kg)
Empty:	
Wheels	675 lb (306.45 kg)
Lunette	125 lb (56.75 kg)
Total	800 lb (363.2 kg)
Loaded:	
Wheels	2905 lb (1 318.87 kg)
Lunette	255 lb (115.77 kg)
Total	3160 lb (1434.64 kg)

END OF WORK PACKAGE

OPERATOR MAINTENANCE
THEORY OF OPERATION

Hydraulic Brake System (M101A2, M101A3, M116A2, and M116A3)

1. The handbrake levers are located at the front corners of the frame. Adjustment of one of these levers is made at the lever itself.
2. Brakes are applied automatically by the hydraulic brake system when the prime mover slows or stops, or when the trailer breaks away from the prime mover.
3. The major components of the hydraulic brake system and their functions are as follows:
    a. Hydraulic Brake Actuator Assembly. This assembly transmits the braking forces of the prime mover to the trailer by inertia. It consists of a drawbar coupler, master cylinder, breakaway chain and lever, and leaf spring.
    b. Drawbar Coupler. The drawbar coupler attaches to the prime mover and controls the master cylinder. When the prime mover goes forward, the drawbar coupler is pulled and the brakes are released. When the prime mover slows down, the trailer pushes the drawbar ring into the prime mover and applies the brakes.
    c. Master Cylinder. The master cylinder changes the mechanical motion of the drawbar coupler and breakaway lever into hydraulic pressure. It has a built-in shock absorber to prevent jerky drawbar coupler movement. The shock absorber prevents hydraulic pressure from building up when the prime mover backs up.
    d. Breakaway Chain. The breakaway chain is attached to the prime mover. If the trailer breaks away from the prime mover, the breakaway chain will pull up on the breakaway lever and apply the brakes.

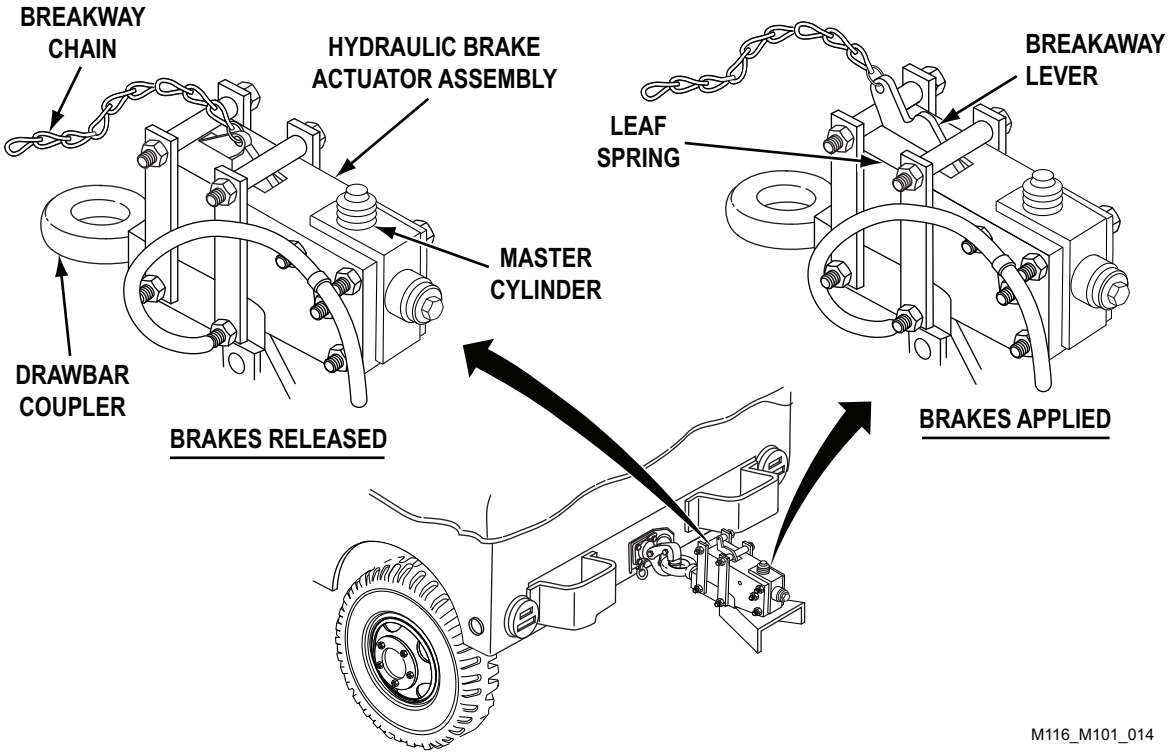

Figure 1. Major Components of Hydraulic Brake System.

Hydraulic Brake System (M101A2, M101A3, M116A2, and M116A3) - Continued

e. Breakaway Lever. The breakaway lever is activated by the breakaway chain and controls the master cylinder. When the breakaway lever is up, the brakes are applied. When the breakaway lever is down, the drawbar coupler movement controls the master cylinder.
f. Leaf Spring. The leaf spring holds the breakaway lever up. The breakaway lever must be reset any time it has been pulled up.
g. Hydraulic Brake Tube Assemblies and Hose Assembly. These components transfer hydraulic pressure from the master cylinder to the wheel cylinders.
h. Wheel Cylinders. One wheel cylinder is located at each wheel. The wheel cylinder changes hydraulic pressure into mechanical motion. When the wheel cylinder is pressurized, it pushes the primary and secondary brakes hoes against the brake drum.
i. Primary Brake Shoe. The primary brake shoe is pushed against the brake drum by the wheel cylinder. The brake drum pushes the primary brake shoe down and into the secondary brake shoe.
j. Secondary Brake Shoe. The secondary brake shoe provides braking action. It is pushed into the brake drum by the primary brake shoe.

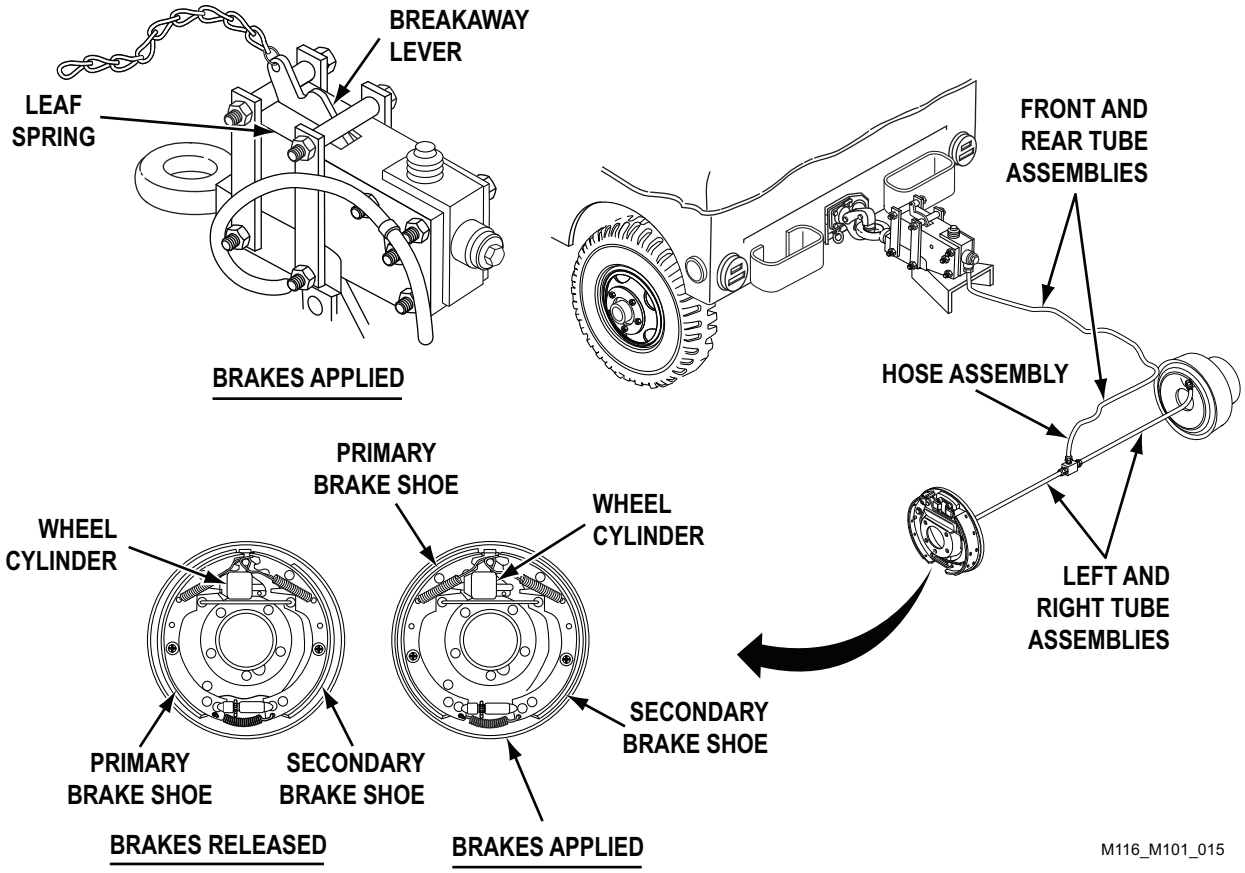

Figure 2. Components of Hydraulic Brake System.

Electrical System

1. Trailers are equipped with a chassis wiring harness (Figure 3, Item 1) that terminates at a covered junction box (Figure 3, Item 2) on the roadside drawbar. The intervehicular cable (Figure 3, Item 3) is fixed to the trailer.
2. Trailers are equipped with a two-light composite stoplight-taillight configuration that may have standard lamps or LEDs.

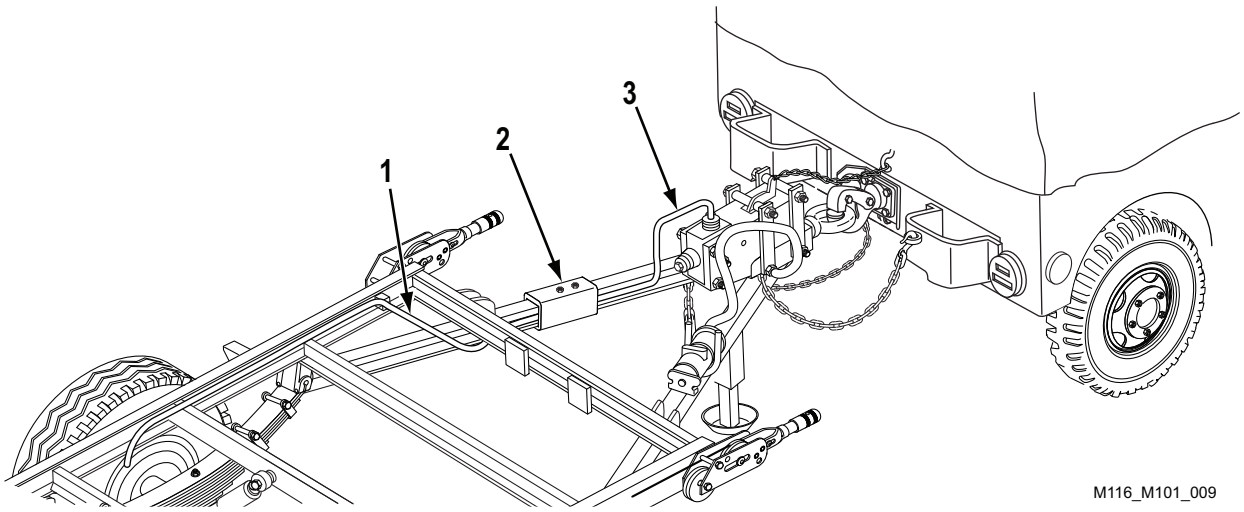

Figure 3. Electrical System.

Axle, Frame, And Suspension

The M116A3 is a variant of the M116A2. Heavy-duty axles, four-inch frames, and spring assemblies allow for a greater payload than the M116A2. In addition, the M116A3 uses the HMMWV radial runflat wheel assemblies.

END OF WORK PACKAGE

CHAPTER 2

OPERATOR INSTRUCTIONS

OPERATOR MAINTENANCE
DESCRIPTION AND USE OF OPERATOR CONTROLS AND INDICATORS

GENERAL

This section shows the location and describes the function of all controls and indicators. Review this section thoroughly before operating the trailer.

Table 1. Controls and Indicators.

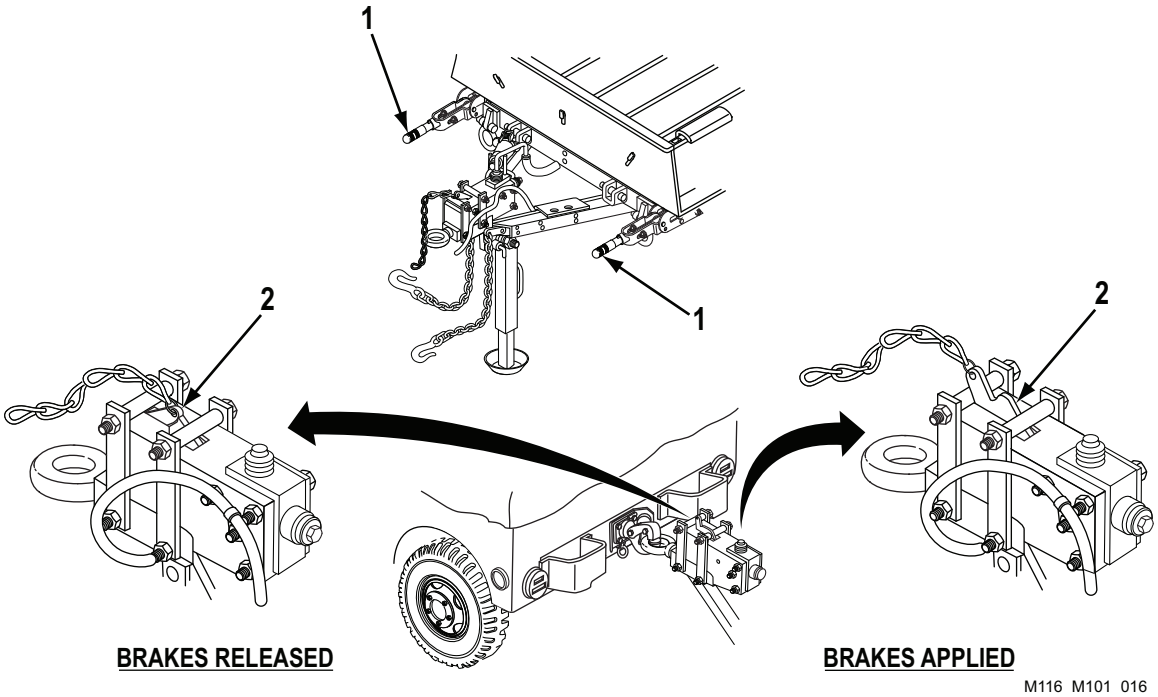

Figure 1. Breakaway and Handbrake Levers Controls.

Key	Control/Indicator	Function
1	Handbrake Levers	Apply and release handbrakes.
2	Breakaway Lever (All except M101A1 and M116A1)	Applies brakes in emergency situations. May be reset to release brakes.

Table 2. Controls and Indicators (Continued).

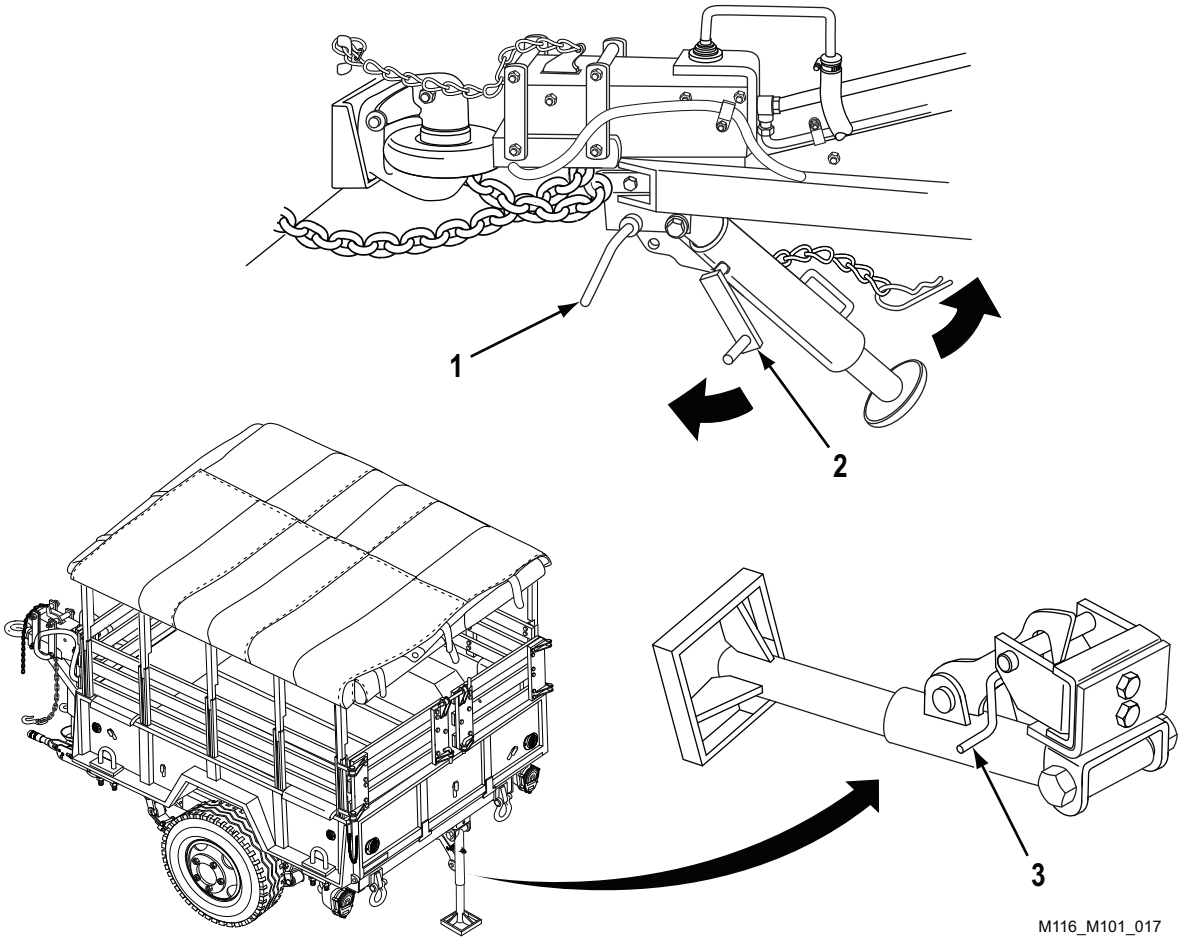

Figure 2. Hand Crank, Handle, and Lever Controls.

Key	Control/Indicator	Function
1	Release Lever	Holds or locks adjustable front support leg in raised or lowered position.
2	Hand Crank	Rotates to adjust height of adjustable front support leg.
3	Release Handle	Holds or locks rear stabilizer in raised or lowered position.

END OF WORK PACKAGE

OPERATOR MAINTENANCE
OPERATION UNDER USUAL CONDITIONS

INITIAL SETUP:

Personnel Required
Two

References
TC 21-305-20

References (cont.)
WP 0002
WP 0006
WP 0032

GENERAL

This section contains instructions for safely operating the M101 and M116 Series trailers under usual conditions. Unusual operating conditions are defined and described in (WP 0006) of this chapter.

Before operating a trailer, make sure Field Maintenance services the vehicle.

Perform all *Before PMCS* listed in (WP 0032) before operating the trailer.

Before coupling and uncoupling the trailer, review all towing instructions in the operator's manual for the prime mover.

OPERATING HANDBRAKES

WARNING

If trailer is not coupled to prime mover, make sure handbrakes are applied and wheels are chocked securely. Failure to comply may result in death or injury to personnel. Seek medical attention in the event of an injury.

1. Pull handbrake levers (Figure 1, Item 1) forward and down to apply handbrakes.
2. Push handbrake levers (Figure 1, Item 1) to an upright position to release handbrakes.

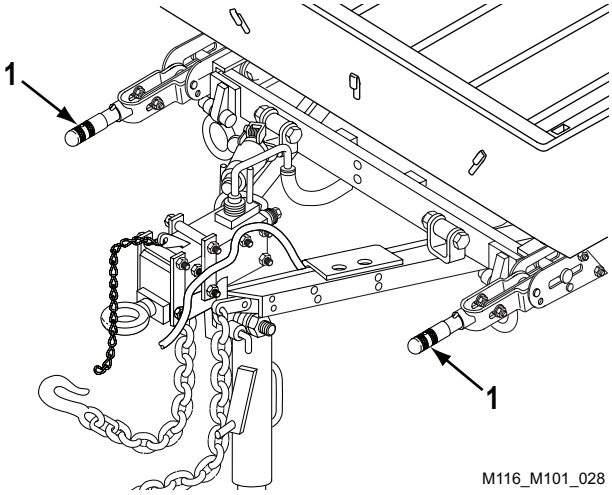

Figure 1. Handbrakes Operation.

END OF TASK

INSTALLING RACK AND CANVAS COVER ASSEMBLIES (M101A2 AND M101A3)

WARNING

Side rack assembly weighs 100 lb (45 kg). Use extreme caution and get assistance when handling. Failure to comply may result in death or injury to personnel. Seek medical attention in the event of an injury.

NOTE

Two persons are required when performing this task.

INSTALLING RACK AND CANVAS COVER ASSEMBLIES (M101A2 AND M101A3) - Continued

1. Apply handbrakes. See OPERATING HANDBRAKES (WP 0005-1).
2. Lift roadside side rack assembly (Figure 2, Item 3) into position above cargo body (Figure 2, Item 4), with bow clips (Figure 2, Item 2) toward front of trailer.
3. Align five stakes (Figure 2, Item 1) with five stake pockets (Figure 2, Item 5) in cargo body (Figure 2, Item 4). Push stakes (Figure 2, Item 1) evenly into stake pockets (Figure 2, Item 5) until roadside side rack assembly (Figure 2, Item 3) is fully installed in cargo body (Figure 2, Item 4).
4. Repeat Steps 2 and 3 to install curbside side rack assembly (Figure 2, Item 3).

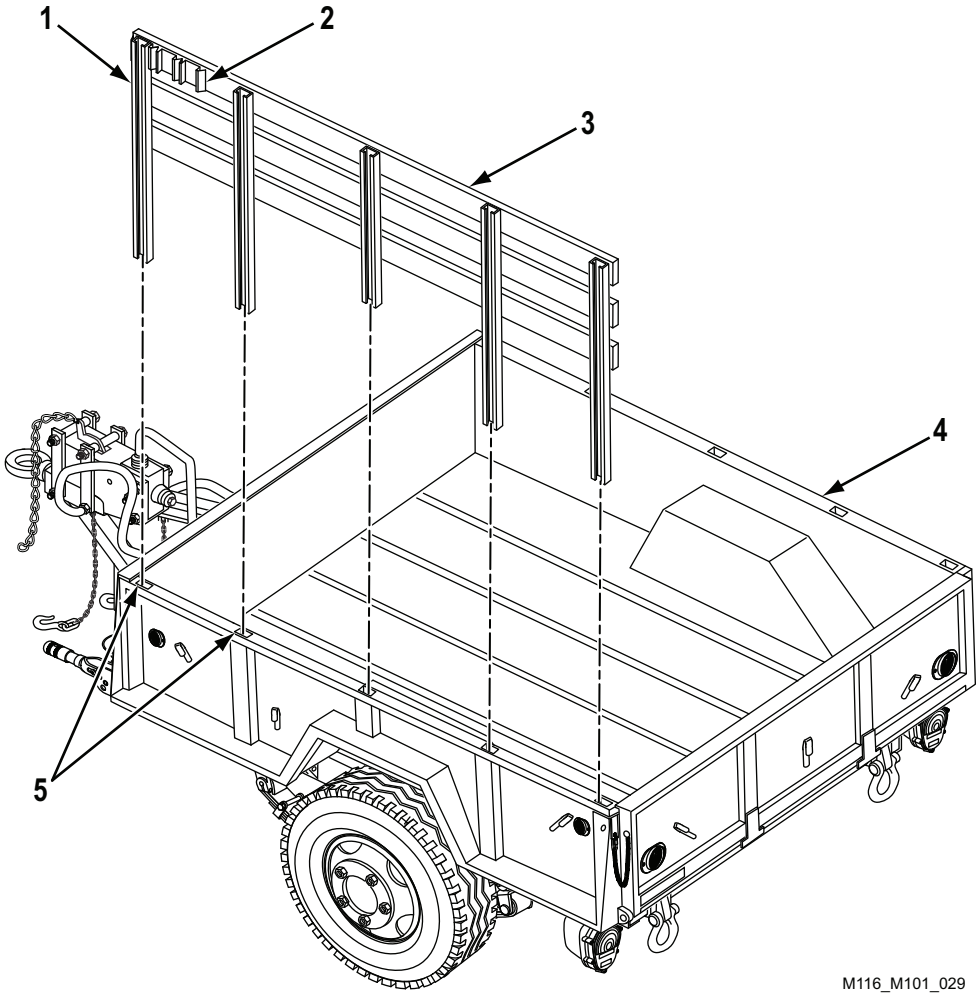

Figure 2. Side Rack Assembly Installation.

INSTALLING RACK AND CANVAS COVER ASSEMBLIES (M101A2 AND M101A3) - Continued

5. Position front rack assembly (Figure 3, Item 3) between roadside and curbside side rack assemblies (Figure 3, Item 1).
6. At roadside corner, align two strap hinge assemblies (Figure 3, Item 4) on front rack assembly (Figure 3, Item 3) with two hinges (Figure 3, Item 6) on roadside side rack assembly (Figure 3, Item 1).
7. Install two straight headed pins (Figure 3, Item 2), with heads facing up, in two strap hinge assemblies (Figure 3, Item 4) and hinges (Figure 3, Item 6). Install two cotter pins (Figure 3, Item 5) in straight headed pins (Figure 3, Item 2).
8. At curbside corner, repeat Steps 6 and 7 to install front rack assembly (Figure 3, Item 3) on curbside side rack assembly (Figure 3, Item 1).

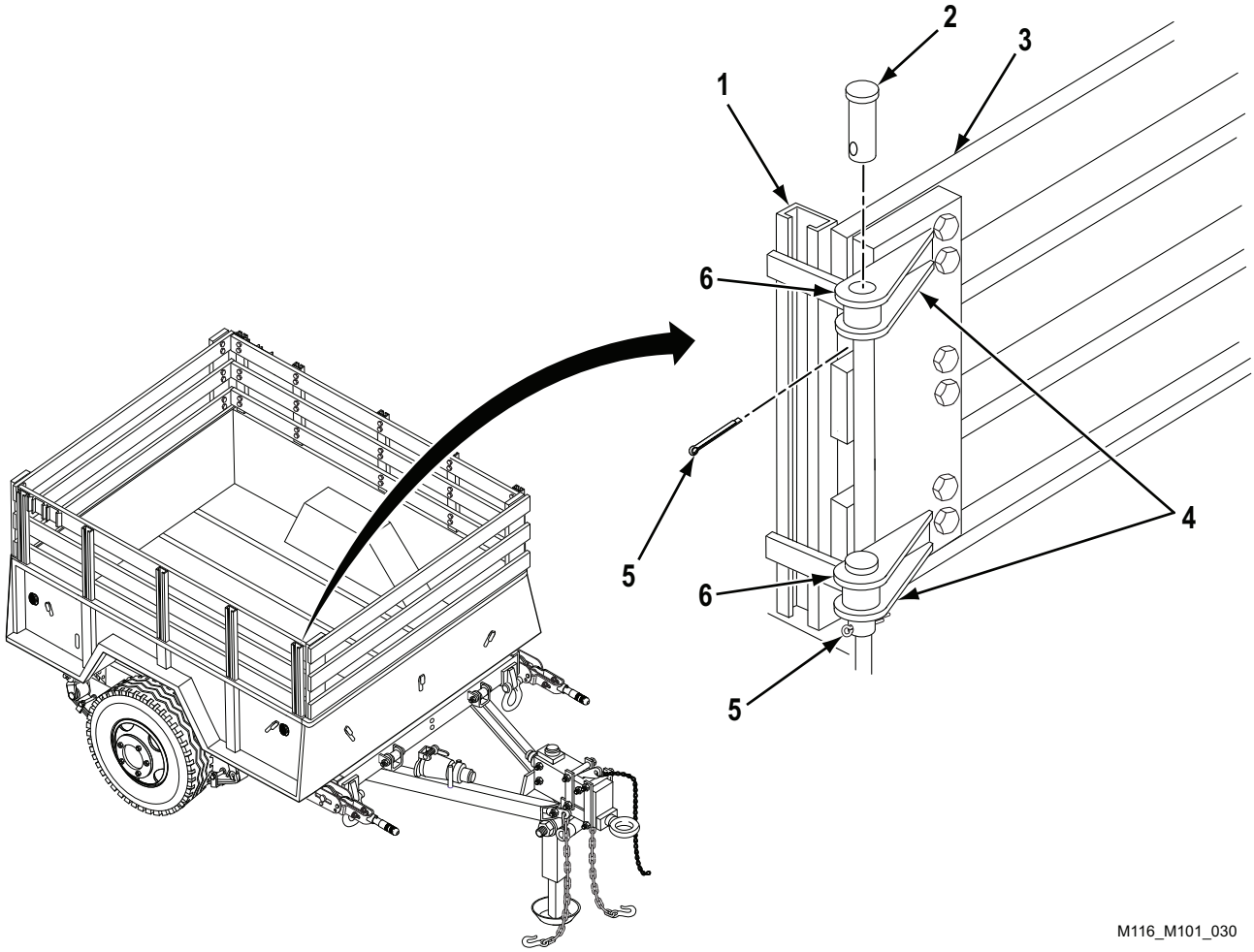

Figure 3. Side Rack Corner Assembly Installation.

INSTALLING RACK AND CANVAS COVER ASSEMBLIES (M101A2 AND M101A3) - Continued

9. At rear of trailer, align two strap hinge assemblies (Figure 4, Item 2) on rear rack assembly (Figure 4, Item 3) with two hinges (Figure 4, Item 11) on roadside side rack assembly (Figure 4, Item 12).
10. Install two straight headed pins (Figure 4, Item 1), with heads facing up, in two strap hinge assemblies (Figure 4, Item 2) and hinges (Figure 4, Item 11). Install two cotter pins (Figure 4, Item 10) in two straight headed pins (Figure 4, Item 1).
11. At curbside, repeat Steps 9 and 10 to install curbside rear rack assembly (Figure 4, Item 5) on curbside side rack assembly (Figure 4, Item 12).
12. Close both rear rack assemblies (Figure 4, Items 3 and 5).
13. Install connecting link (Figure 4, Item 6) in two top strap latch assemblies (Figure 4, Item 4) of both rear rack assemblies (Figure 4, Items 3 and 5).
14. Install two connecting links (Figure 4, Item 7) in two bottom strap latch assemblies (Figure 4, Item 9) on both rear rack assemblies (Figure 4, Items 3 and 5) and two holes in cargo body (Figure 4, Item 8).
15. Align one of five bow assemblies (Figure 4, Item 13) with two stakes (Figure 4, Item 14) in both side rack assemblies (Figure 4, Item 12). Push bow assembly (Figure 4, Item 13) evenly into stakes (Figure 4, Item 14) until fully installed in side rack assemblies (Figure 4, Item 12).
16. Repeat Step 15 to install remaining four bow assemblies (Figure 4, Item 13).

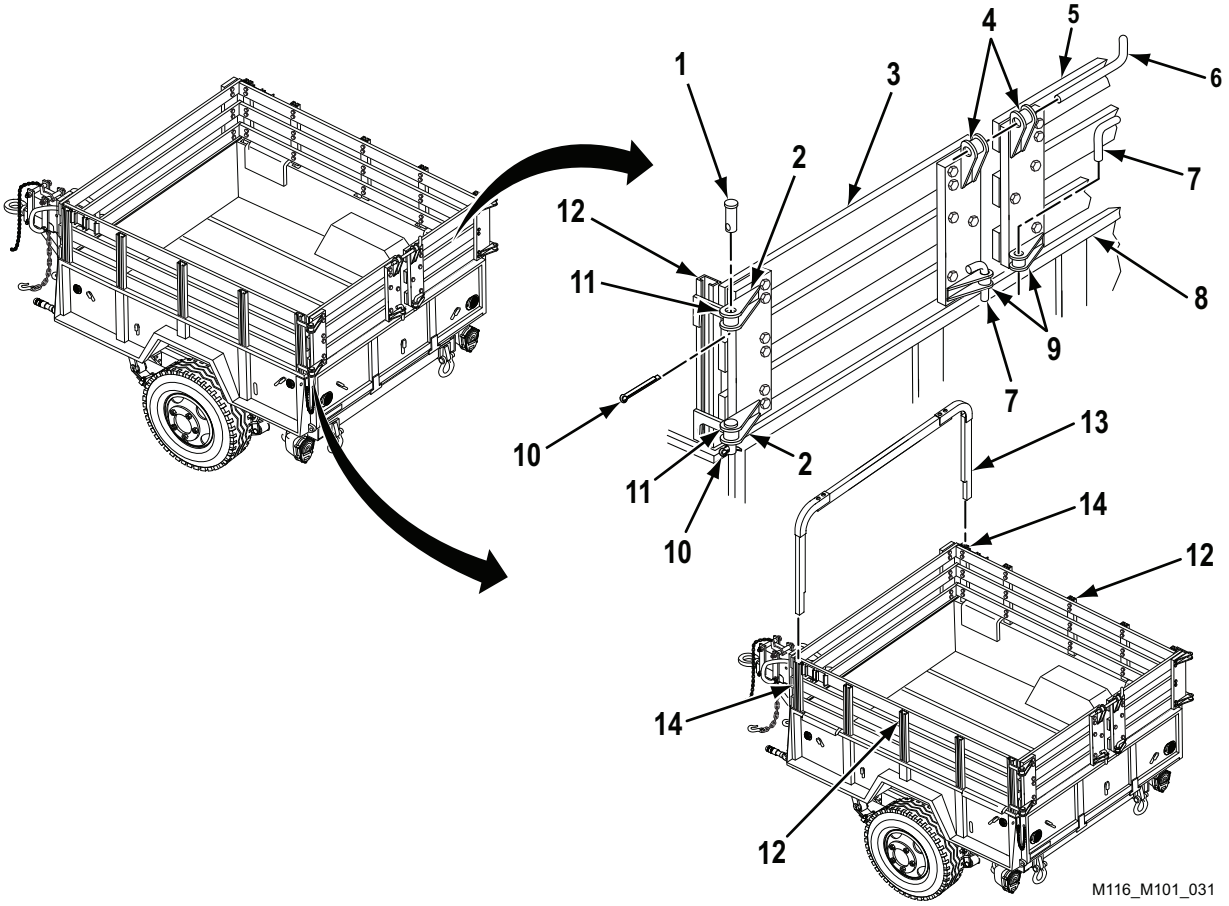

Figure 4. Rear Rack and Bow Assembly Installation.

INSTALLING RACK AND CANVAS COVER ASSEMBLIES (M101A2 AND M101A3) - Continued

WARNING

Canvas cover weighs over 100 lb (45 kg). Use suitable lifting device. Failure to comply may result in death or injury to personnel. Seek medical attention in the event of an injury.

NOTE

Canvas cover assembly should be positioned so that the side marked "FRONT" faces the front of the trailer.

17. Spread canvas cover assembly (Figure 5, Item 1) over five bow assemblies (Figure 5, Item 2).
18. Unfold front curtain (Figure 5, Item 4) and two side curtains (Figure 5, Item 3).
19. From inside, attach top of canvas cover assembly (Figure 5, Item 1) to five bow assemblies (Figure 5, Item 2) by securing 10 tiedown straps (Figure 5, Item 5) using 10 snap fasteners (Figure 5, Item 11).
20. Unfold back curtain (Figure 5, Item 6).
21. Attach 14 ropes (Figure 5, Item 7) to 14 cargo hooks (Figure 5, Item 8) on cargo body (Figure 5, Item 10). Fasten eight straps (Figure 5, Item 9) on canvas cover assembly (Figure 5, Item 1).

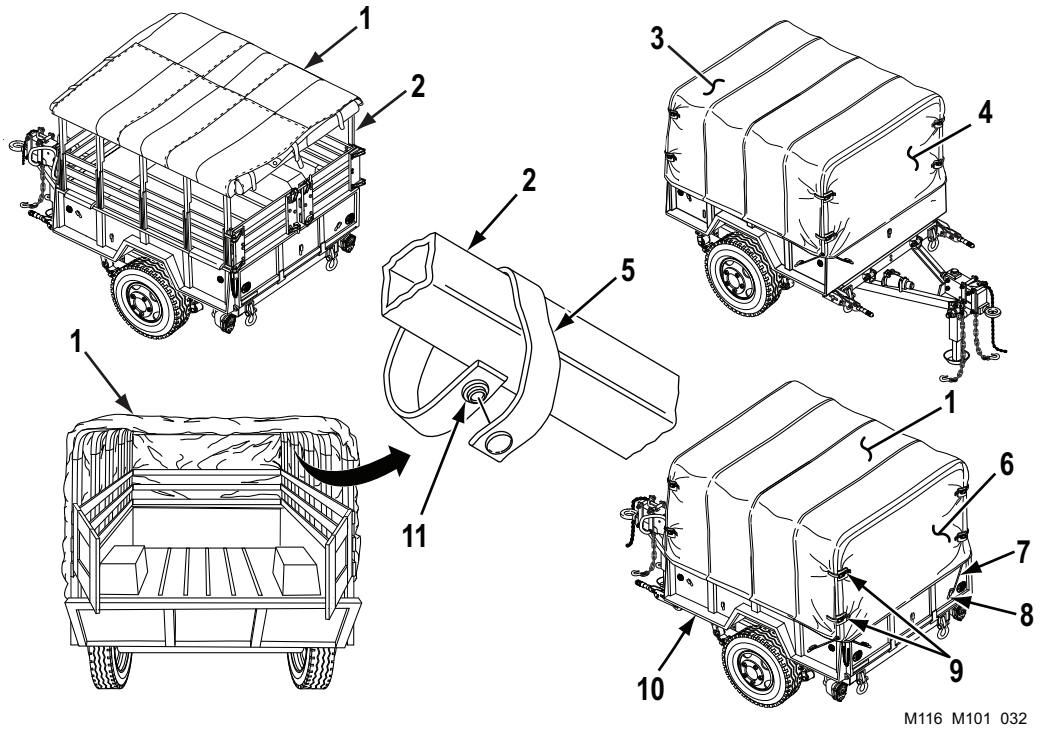

Figure 5. Canvas Cover Assembly Installation.

END OF TASK

LOADING THE TRAILER

WARNING

If trailer is not coupled to prime mover, make sure handbrakes are applied and wheels are chocked securely. Failure to comply may result in death or injury to personnel. Seek medical attention in the event of an injury.

1. Operate handbrake levers (Figure 6, Item 2) to apply handbrakes. See OPERATING HANDBRAKES (WP 0005-1).

WARNING


Rear stabilizer must be used if trailer is carrying a load. Failure to comply may cause trailer to tip, resulting in death or injury to personnel. Seek medical attention in the event of an injury.

2. If equipped with rear stabilizer (Figure 6, Item 4), pull out on release handle (Figure 6, Item 1) and lower rear stabilizer (Figure 6, Item 4). Turn foot assembly (Figure 6, Item 3) until it firmly contacts ground.

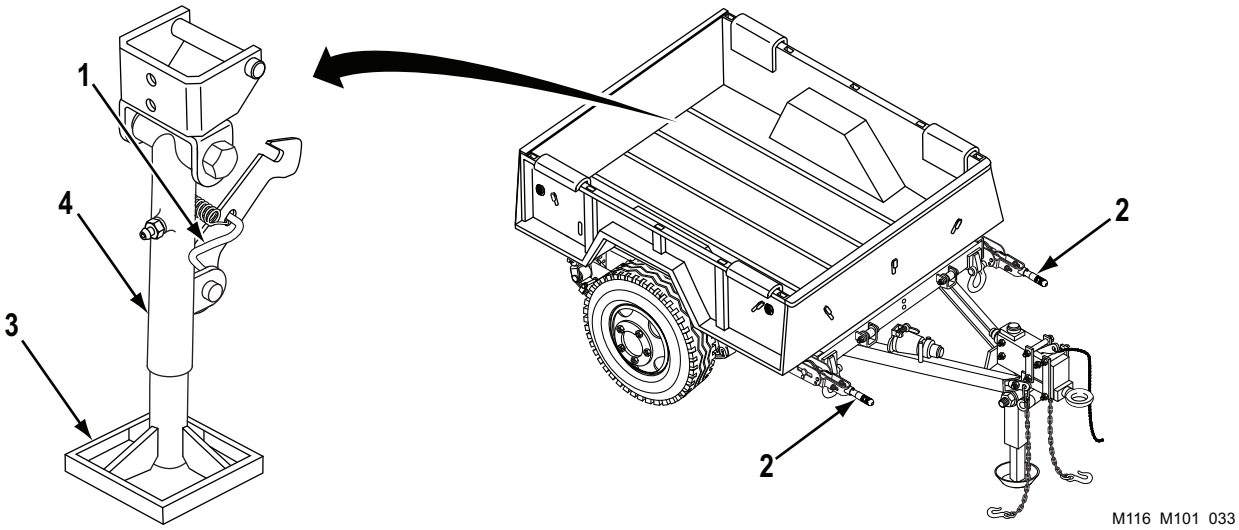

Figure 6. Engage Rear Stabilizer.

LOADING THE TRAILER - Continued

WARNING


Make sure load weight is evenly distributed. Too much weight at the front will make trailer difficult to lift. Too much weight at the rear will cause trailer to tip backward. Failure to comply may result in death or injury to personnel. Seek medical attention in the event of an injury.

3. Distribute load evenly over trailer. Do not exceed maximum allowable payload (WP 0002).

END OF TASK

COUPLING TRAILER TO PRIME MOVER

NOTE

Make sure prime mover and trailer are on level ground before coupling.

1. Apply handbrakes. See OPERATING HANDBRAKES (WP 0005-1).

WARNING


- Rear stabilizer MUST be used during loading and unloading when trailer is not coupled to prime mover. Failure to comply may cause trailer to tip, resulting in death or injury to personnel. Seek medical attention in the event of an injury.
- Make sure that weight of trailer is on front support (landing) leg or trailer is coupled to prime mover before raising rear stabilizer. Failure to comply may cause trailer to tip, resulting in death or injury to personnel. Seek medical attention in the event of an injury.

2. If equipped with rear stabilizer (Figure 7, Item 3), turn foot assembly (Figure 7, Item 4) as far as it will go into rear stabilizer (Figure 7, Item 3). Swing rear stabilizer (Figure 7, Item 3) up until latch hook (Figure 7, Item 2) hooks onto up-latch pin (Figure 7, Item 1).

COUPLING TRAILER TO PRIME MOVER - Continued

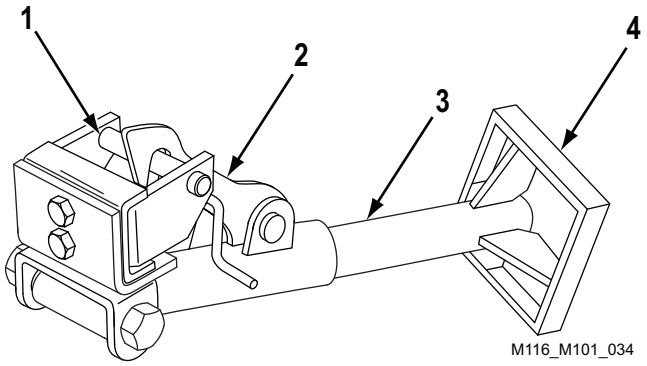

Figure 7. Disengage Rear Stabilizer.

3. Remove safety pin (Figure 8, Item 3) from pintle hook (Figure 8, Item 2) of prime mover.
4. Pull up on locking latch (Figure 8, Item 1) to open pintle hook (Figure 8, Item 2).

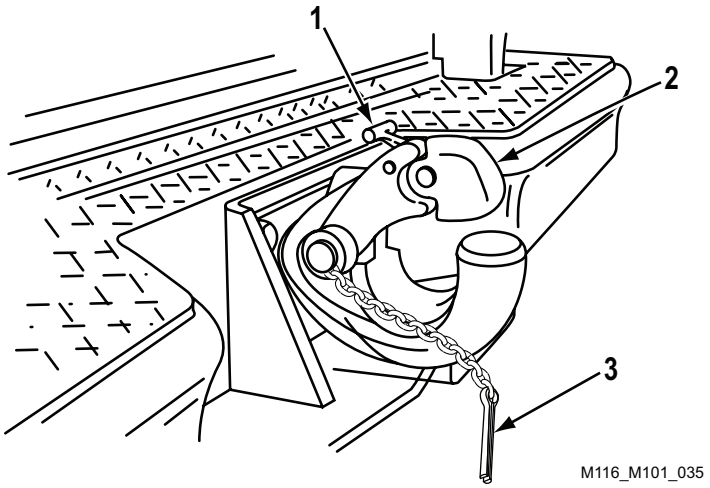

Figure 8. Open Pintle Hook.

COUPLING TRAILER TO PRIME MOVER - Continued

WARNING

- All personnel must stand clear of prime mover and trailer during coupling operation. Failure to comply may result in death or injury to personnel. Seek medical attention in the event of an injury.
- DO NOT move trailer laterally (push/pull) using the landing leg as a third wheel. Failure to comply may result in death or injury to personnel. Seek medical attention in the event of an injury.
- Use ground guides and back prime mover to the trailer lunette. Failure to comply may result in death or injury to personnel. Seek medical attention in the event of an injury.

5. Back prime mover in front of drawbar coupler (Figure 9, Item 1).

WARNING

- Drawbar weighs up to 280 lb (127 kg) loaded tongue weight. Use front support (landing) leg crank to raise and lower trailer drawbar. If support leg assembly is inoperative, use suitable lifting device to lift the drawbar. If a suitable lifting device is not available, remove load from trailer and use four or more persons to lift drawbar. Failure to comply may result in death or injury to personnel. Seek medical attention in the event of an injury.
- Keep hands away from lunette ring during coupling operations. Use the landing leg crank to lower or raise lunette. Realign prime mover tow pintle with lunette as necessary. Failure to comply may result in death or injury to personnel. Seek medical attention in the event of an injury.

6. Use hand crank to adjust height of drawbar coupler (Figure 9, Item 1). Place drawbar coupler (Figure 9, Item 1) in pintle hook (Figure 9, Item 4).
7. Close pintle hook (Figure 9, Item 4). Check to see that locking latch (Figure 9, Item 3) is locked by pulling up on pintle hook (Figure 9, Item 4). Pintle hook (Figure 9, Item 4) should not come up. Install safety pin (Figure 9, Item 2) in pintle hook (Figure 9, Item 4).
8. Cross two safety chains (Figure 9, Item 6) under drawbar coupler (Figure 9, Item 1) and hook to two prime mover tow shackles (Figure 9, Item 5).

COUPLING TRAILER TO PRIME MOVER - Continued

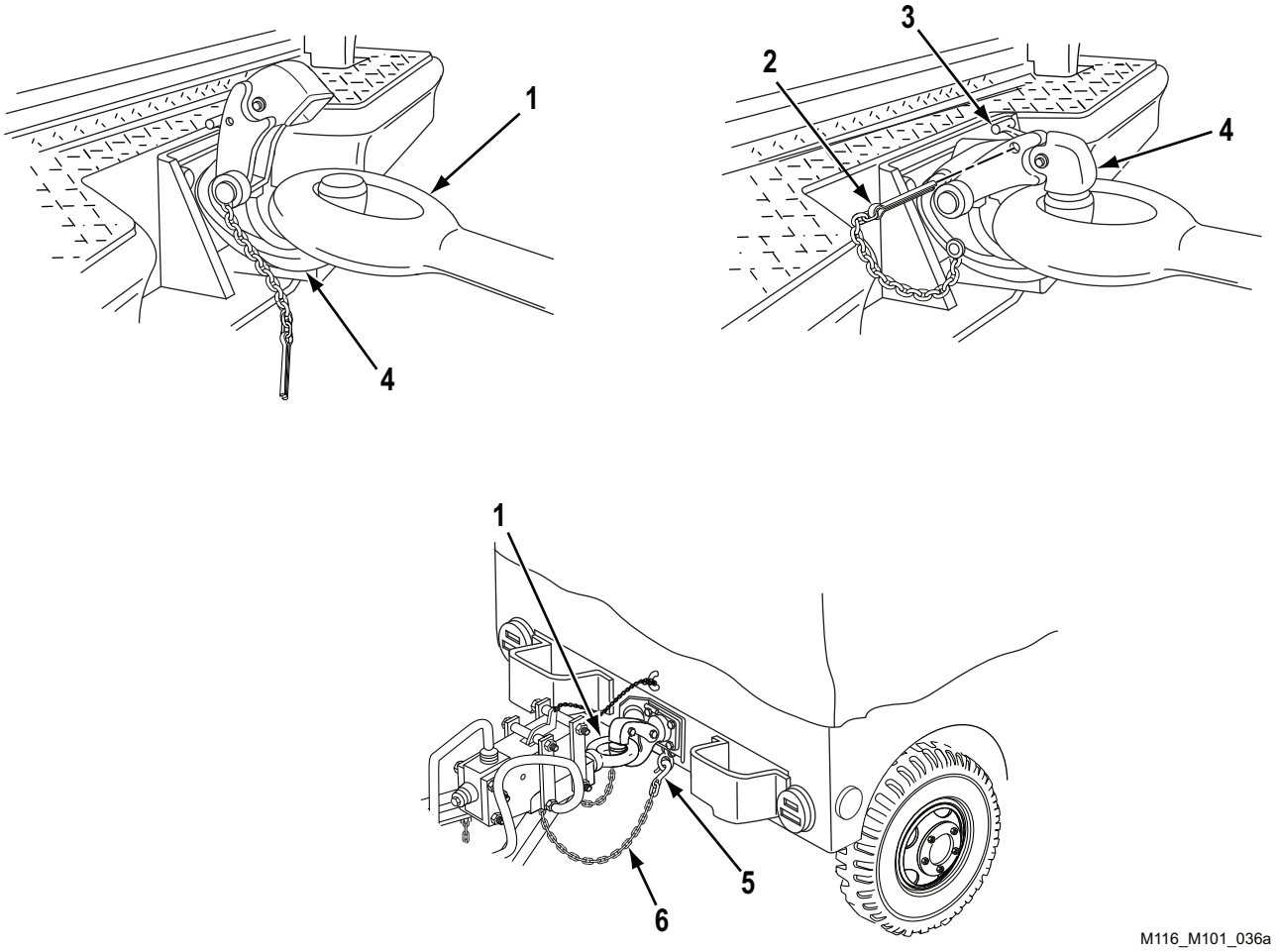

Figure 9. Couple Trailer to Prime Mover.

COUPLING TRAILER TO PRIME MOVER - Continued

NOTE

Step 9 does not apply to Models M101A1 and M116A1.

9. Attach breakaway chain (Figure 10, Item 3) to prime mover. Make sure there is enough slack in breakaway chain (Figure 10, Item 3) to allow trailer to make full turns.

CAUTION

Make sure breakaway lever is fully released. If breakaway lever is not fully released trailer brakes will drag, heat up, and burn out. Failure to comply may result in damage to, or destruction of, equipment or mission.

NOTE

Step 10 does not apply to Models M101A1 and M116A1.

10. Make sure breakaway lever (Figure 10, Item 1) is pushed all the way back toward trailer and that ratchet teeth (Figure 10, Item 4) are not engaged in leaf spring (Figure 10, Item 2). If ratchet teeth (Figure 10, Item 4) are engaged in leaf spring (Figure 10, Item 2), lift leaf spring (Figure 10, Item 2) and push breakaway lever (Figure 10, Item 1) all the way back toward trailer.

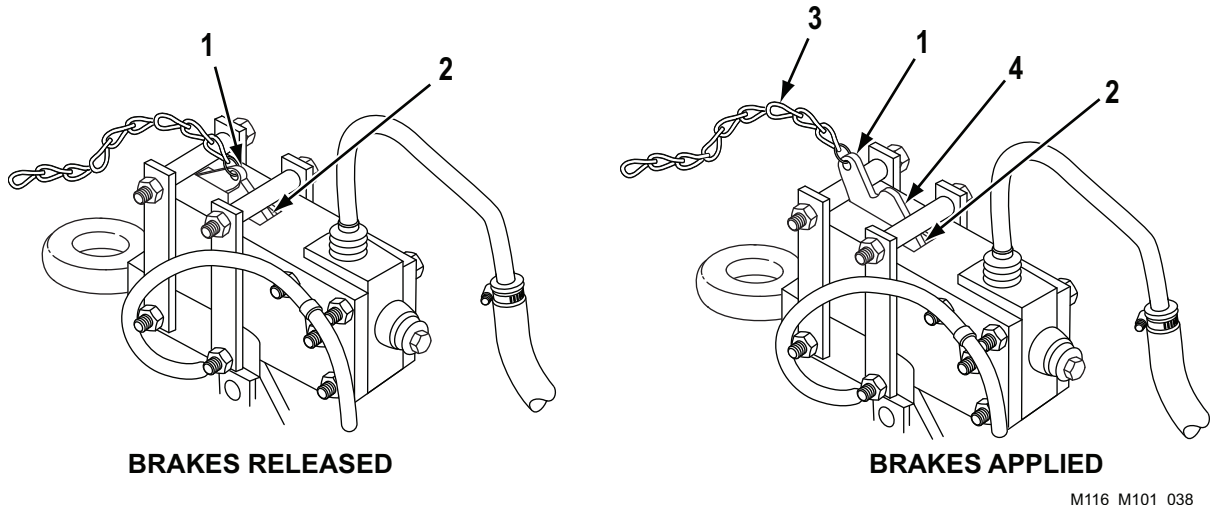

Figure 10. Breakaway Lever Assembly Operation.

11. Open latch cover (Figure 11, Item 1) of intervehicular cable (Figure 11, Item 7) and push latch (Figure 11, Item 8) to hold latch cover (Figure 11, Item 1) open.

12. Lift receptacle cover (Figure 11, Item 3) of prime mover. Push plug (Figure 11, Item 5) of intervehicular cable (Figure 11, Item 7) all the way into prime mover receptacle (Figure 11, Item 4). Release receptacle cover (Figure 11, Item 3). Make sure tab (Figure 11, Item 2) rests in slot (Figure 11, Item 6).

COUPLING TRAILER TO PRIME MOVER - Continued

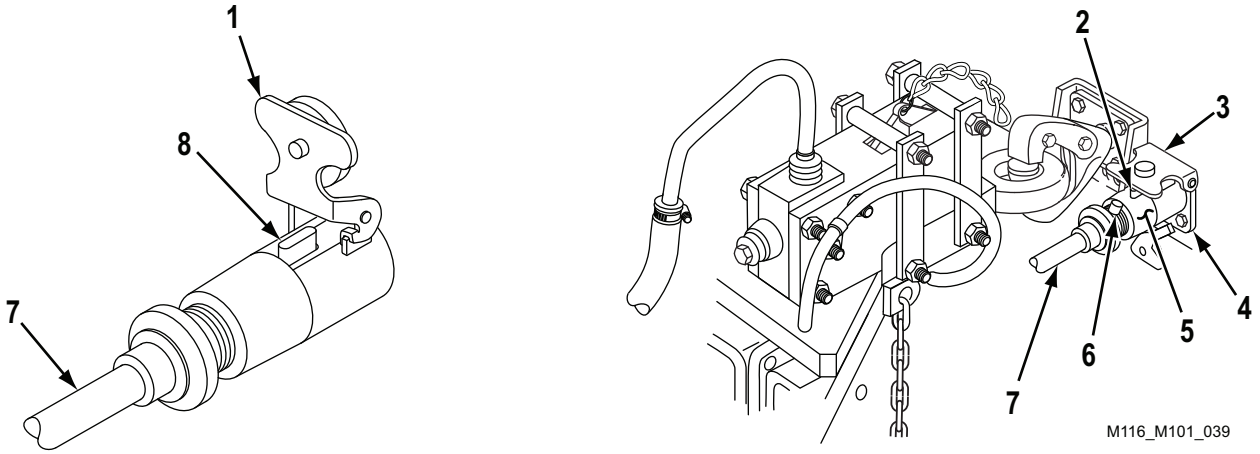

Figure 11. Intervehicular Cable Installation.

13. Pull out on release lever (Figure 12, Item 4) and raise front support leg (Figure 12, Item 2). Lock front support leg (Figure 12, Item 2) in raised position by pushing in release lever (Figure 12, Item 4) all the way.
14. Stow hand crank (Figure 12, Item 3) on front support leg (Figure 12, Item 2) with chain and cotter pin (Figure 12, Item 1).
15. Release handbrakes. See OPERATING HANDBRAKES (WP 0005-1).

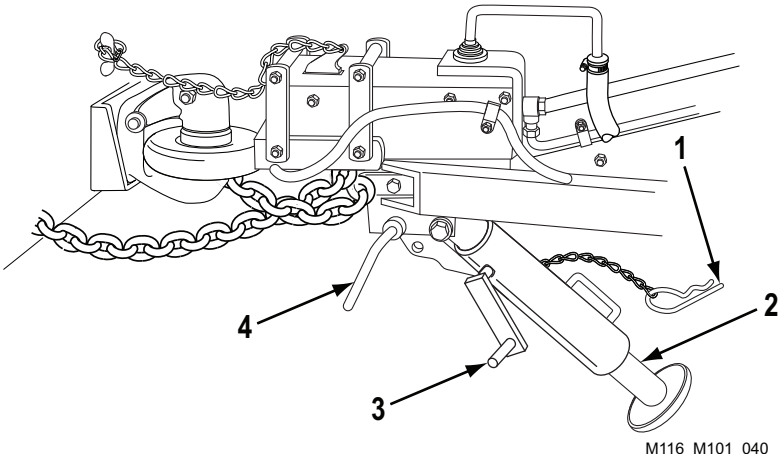

Figure 12. Raise Front Support Leg.

END OF TASK

TOWING INSTRUCTIONS

WARNING

Do not stand between prime mover and trailer when backing prime mover. Failure to comply may result in death or injury to personnel. Seek medical attention in the event of an injury.

NOTE

Refer to TC 21-305-20 for further information on proper towing practices.

1. DRIVING

CAUTION

Sudden stops may cause drawbar to bend or buckle and may cause damage to hydraulic brake actuator assembly. Failure to comply may result in damage to, or destruction of, equipment or mission.

a. When trailer is coupled, always start and stop prime mover slowly and gradually. Do this whether or not trailer is loaded.

b. Sudden and fast acceleration will cause hydraulic brakes to apply.

c. Never exceed maximum speed of 50 miles per hour (80 kph) highway and 6 miles per hour (10 kph) cross-country.

d. When driving prime mover and trailer, overall length of unit must be kept in mind when turning and passing other vehicles. Because unit is hinged in the middle, turning and backing are also affected. Heavier payloads will increase stopping distance and decrease off-road maneuverability.

2. TURNING

CAUTION

Tight turns may cause damage to hydraulic brake actuator assembly. Failure to comply may result in damage to, or destruction of, equipment or mission.

a. When turning corners, allow for the fact that trailer wheels turn inside the turning radius of prime mover.

b. To make a right turn at an intersection, drive prime mover partway into intersection, then cut sharply to the right. This will allow for turning radius of trailer to keep trailer wheels off the curb.

3. BACKING

CAUTION

Jackknifing when backing may cause damage to hydraulic brake actuator assembly. Failure to comply may result in damage to, or destruction of, equipment or mission.

a. Always back prime mover slowly and gradually.

b. Whenever possible, have an assistant driver or another person act as a ground guide.

c. Adjust all prime mover rearview mirrors before backing.

d. When backing, rear of trailer will move in opposite direction in which prime mover is turned. When prime mover is turned to the right, rear of trailer will go left. When prime mover has turned and backing in a

TOWING INSTRUCTIONS - Continued

straight line is required, turn prime mover in direction trailer is moving. This will slowly bring prime mover and trailer into a straight line.

4. STOPPING

CAUTION

Sudden stops may cause drawbar to bend or buckle and may cause damage to hydraulic brake actuator assembly. Failure to comply may result in damage to, or destruction of, equipment or mission.

Always stop prime mover by applying brakes gradually and smoothly. Do this whether or not trailer is loaded.

5. PARKING
   a. When prime mover and trailer are to be left unattended, set prime mover parking brakes, turn off engine, and set wheel chocks.
   b. Apply handbrakes. See OPERATING HANDBRAKES (WP 0005-1).

END OF TASK

UNCOUPLING TRAILER FROM PRIME MOVER

1. Apply handbrakes. See OPERATING HANDBRAKES (WP 0005-1).
2. Position chock blocks.
   a. Remove chock blocks from prime mover.
   b. Place chock blocks behind tires on level ground or uphill slope. On downhill slope, place chock blocks in front of tires.
3. Pull out on release lever (Figure 13, Item 1) and lower front support leg (Figure 13, Item 2). Lock front support leg (Figure 13, Item 2) in lowered position by pushing in release lever (Figure 13, Item 1) all the way.

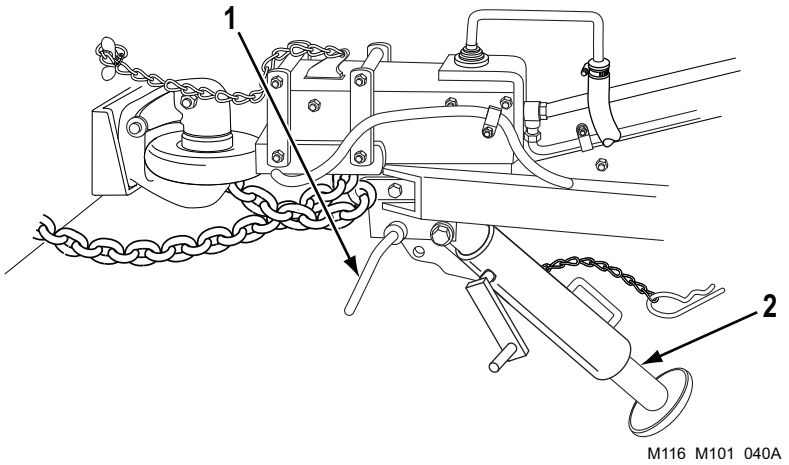

Figure 13. Lower Front Support Leg.

UNCOUPLING TRAILER FROM PRIME MOVER - Continued

4. Lift receptacle cover (Figure 14, Item 4) of prime mover from slot (Figure 14, Item 3), and disconnect plug (Figure 14, Item 6) of intervehicular cable (Figure 14, Item 7) from prime mover receptacle (Figure 14, Item 5).
5. Pull back latch (Figure 14, Item 8). Latch cover (Figure 14, Item 19) of intervehicular cable (Figure 14, Item 7) is spring-loaded to close.

NOTE

Models M101A1 and M116A1 do not have a breakaway chain.

6. Remove breakaway chain (Figure 14, Item 2) from prime mover.

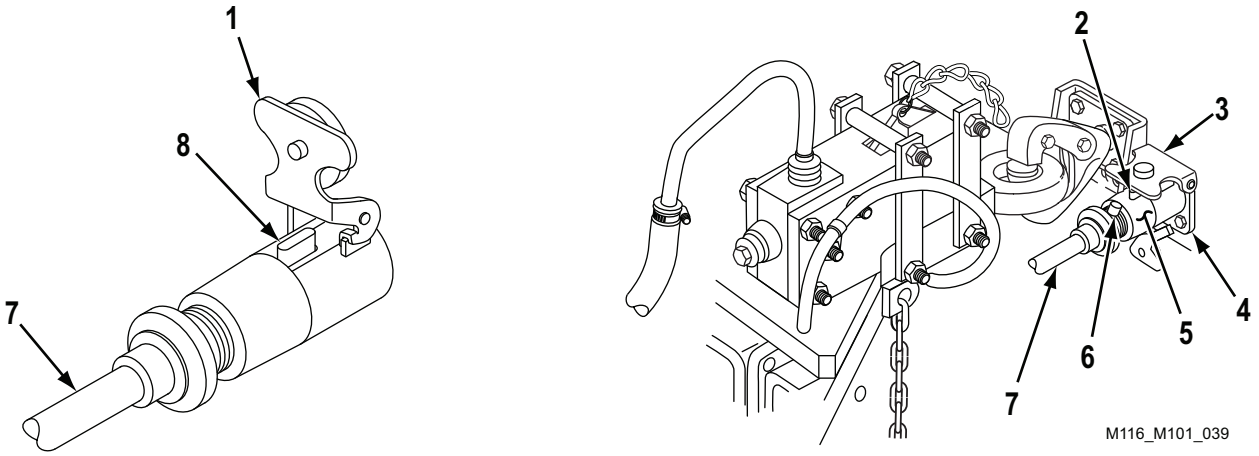

Figure 14. Intervehicular Cable Disconnection.

7. Remove two safety chains (Figure 15, Item 1) from two prime mover tow shackles (Figure 15, Item 2).

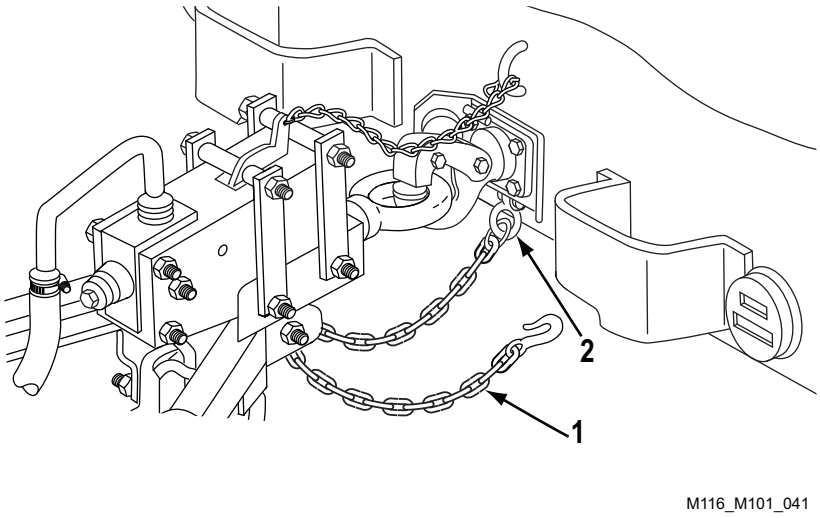

Figure 15. Safety Chains Removal.

UNCOUPLING TRAILER FROM PRIME MOVER - Continued

WARNING


- If load has shifted, make sure it is evenly distributed before removing drawbar coupler from pintle hook. Failure to comply may result in death or injury to personnel. Seek medical attention in the event of an injury.
- Rear stabilizer must be used if trailer is carrying a load. Failure to comply may cause trailer to tip, resulting in death or injury to personnel. Seek medical attention in the event of an injury.

8. Pull out on release handle (Figure 16, Item 2), and lower rear stabilizer (Figure 16, Item 3). Turn foot assembly (Figure 16, Item 4) until it firmly contacts ground.
9. Remove safety pin (Figure 16, Item 5) from pintle hook (Figure 16, Item 6).
10. Pull up on locking latch (Figure 16, Item 1) and open pintle hook (Figure 16, Item 6).

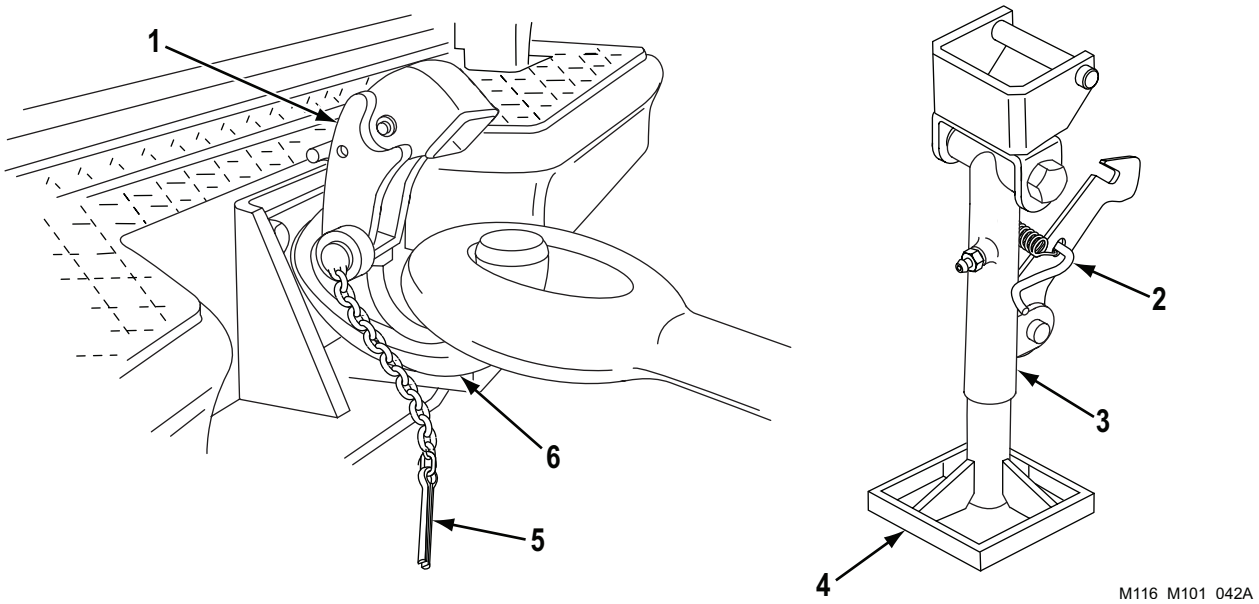

Figure 16. Uncouple Trailer from Prime Mover.

UNCOUPLING TRAILER FROM PRIME MOVER - Continued

WARNING

- Drawbar weighs up to 280 lb (127 kg) loaded tongue weight. Use front support (landing) leg crank to raise and lower trailer drawbar. If support leg assembly is inoperative, use suitable lifting device to lift the drawbar. If a suitable lifting device is not available, remove load from trailer and use four or more persons to lift drawbar. Failure to comply may result in death or injury to personnel. Seek medical attention in the event of an injury.
- Keep hands away from lunette ring during coupling operations. Use the landing leg crank to lower or raise lunette. Realign prime mover tow pintle with lunette as necessary. Failure to comply may result in death or injury to personnel. Seek medical attention in the event of an injury.

11. Use hand crank to adjust height of drawbar coupler (Figure 17, Item 2). Remove drawbar coupler (Figure 17, Item 2) from pintle hook (Figure 17, Item 3).
12. Close pintle hook (Figure 17, Item 3). Pull up on pintle hook (Figure 17, Item 3) to ensure that locking latch (Figure 17, Item 1) is engaged. Install safety pin (Figure 17, Item 4) in pintle hook (Figure 17, Item 3).

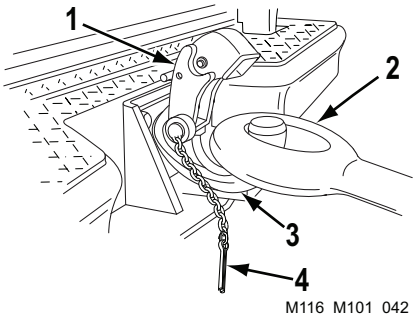

Figure 17. Secure Pintle Hook.

END OF TASK

REMOVING CANVAS COVER AND RACK ASSEMBLIES (M101A2 AND M101A3)

NOTE

Two persons are required when performing this task.

1. Apply handbrakes. See OPERATING HANDBRAKES (WP 0005-1).
2. Remove 14 ropes (Figure 18, Item 9) from 14 cargo hooks (Figure 18, Item 10) on cargo body (Figure 18, Item 11).
3. Unfasten eight straps (Figure 18, Item 7) on canvas cover assembly (Figure 18, Item 1).
4. Fold back curtain (Figure 18, Item 8) over top of canvas cover assembly (Figure 18, Item 1).
5. From inside trailer, unsnap 10 snap fasteners (Figure 18, Item 4) and remove 10 tiedown straps (Figure 18, Item 3) from five bow assemblies (Figure 18, Item 2).

REMOVING CANVAS COVER AND RACK ASSEMBLIES (M101A2 AND M101A3) - Continued

WARNING

Canvas cover weighs over 100 lb (45 kg). Use suitable lifting device. Failure to comply may result in death or injury to personnel. Seek medical attention in the event of an injury.

6. Remove canvas cover assembly (Figure 18, Item 1) from five bow assemblies (Figure 18, Item 2). Fold canvas cover assembly (Figure 18, Item 1) and stow.
7. Remove five bow assemblies (Figure 18, Item 2) from 10 stakes (Figure 18, Item 5).

NOTE

Skip Step 8 if rack assemblies are being removed. Bow assemblies are stowed in bow clips only if side rack and rear rack assemblies are not removed.

8. Stow five bow assemblies (Figure 18, Item 2) in 10 bow clips (Figure 18, Item 6).

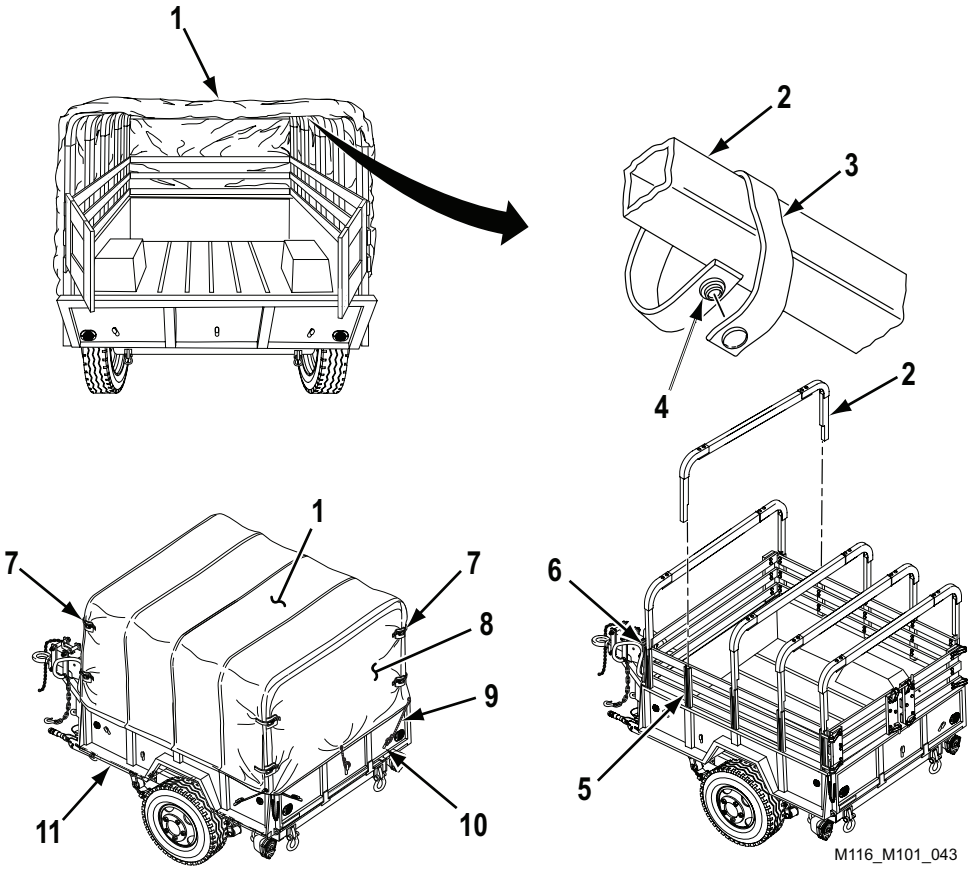

Figure 18. Canvas Cover and Bow Removal.

REMOVING CANVAS COVER AND RACK ASSEMBLIES (M101A2 AND M101A3) - Continued

9. Remove connecting link (Figure 19, Item 4) from two top strap latch assemblies (Figure 19, Item 3) of roadside and curbside rear rack assemblies (Figure 19, Items 5 and 11).
10. Remove two connecting links (Figure 19, Item 7) from two bottom strap latch assemblies (Figure 19, Item 8) and holes in cargo body (Figure 19, Item 6).
11. At roadside rear rack assembly (Figure 19, Item 11), remove two cotter pins (Figure 19, Item 9) and straight headed pins (Figure 19, Item 1) from two strap hinge assemblies (Figure 19, Item 2) and hinges (Figure 19, Item 10). Remove roadside rear rack assembly (Figure 19, Item 11) from curbside rear rack assembly (Figure 19, Item 5).
12. At curbside, repeat Step 11 to remove curbside rear rack assembly (Figure 19, Item 5).

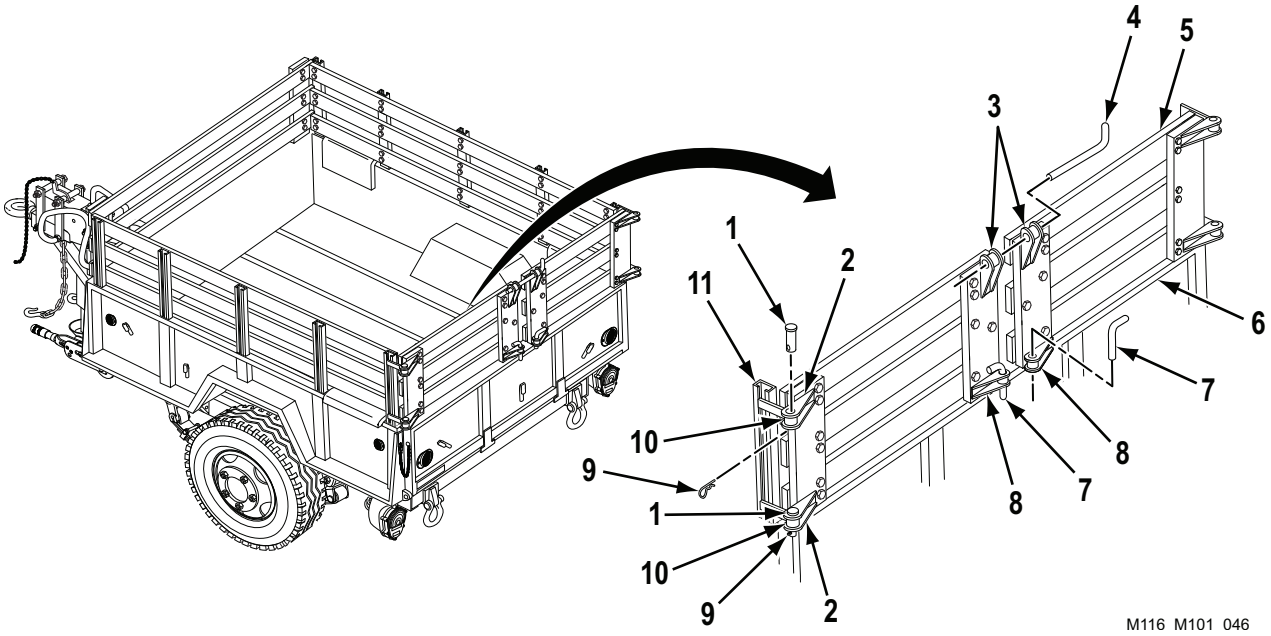

Figure 19. Rear Rack Assembly Removal.

REMOVING CANVAS COVER AND RACK ASSEMBLIES (M101A2 AND M101A3) - Continued

13. At roadside front rack assembly (Figure 20, Item 3), remove two cotter pins (Figure 20, Item 5) and straight headed pins (Figure 20, Item 1) from two strap hinge assemblies (Figure 20, Item 2) and hinges (Figure 20, Item 6) on roadside side rack assembly (Figure 20, Item 7).
14. Repeat Step 13 at curbside front rack assembly (Figure 20, Item 3).
15. Remove front rack assembly (Figure 20, Item 3) from roadside and curbside rack assemblies (Figure 20, Items 4 and 7).

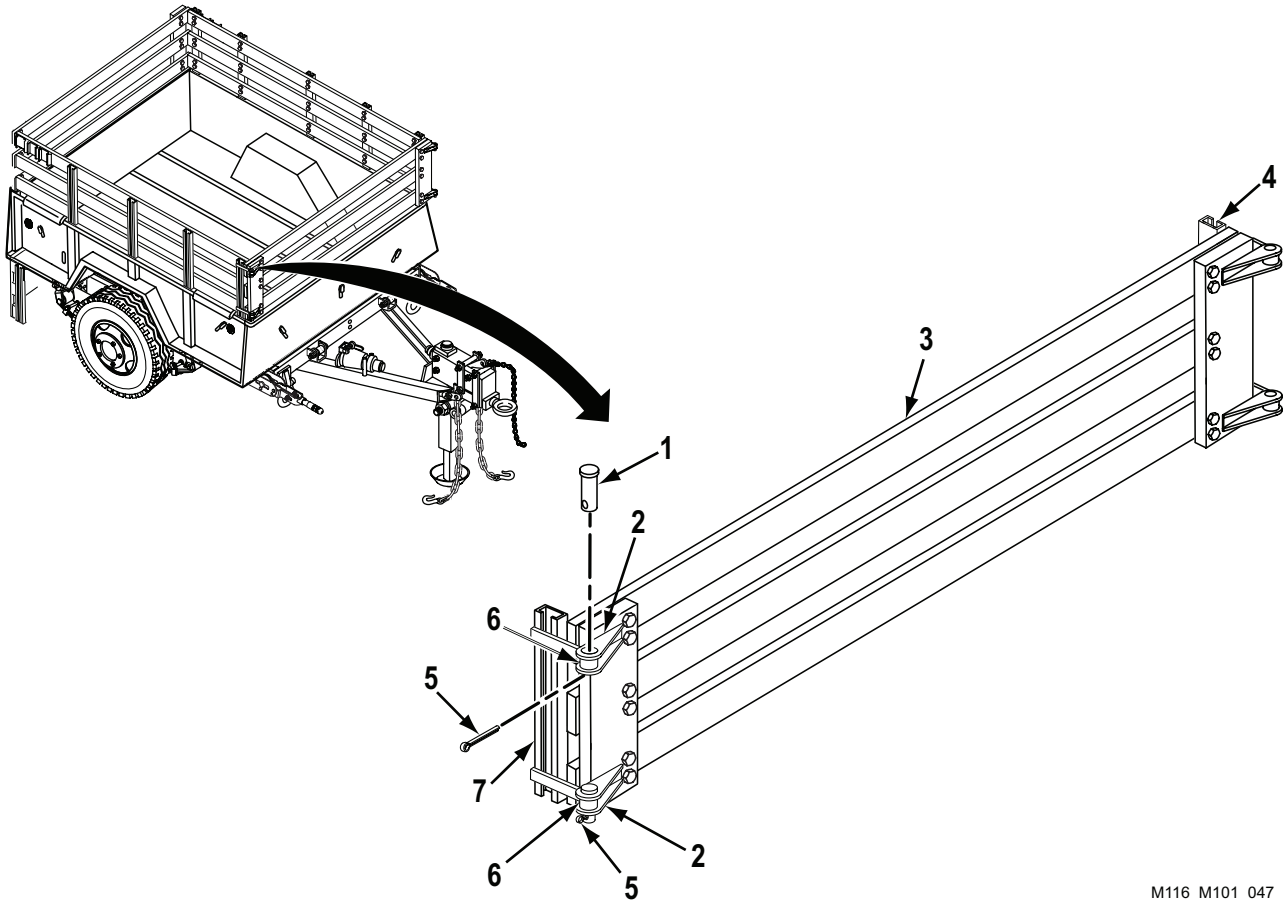

Figure 20. Front Rack Assembly Removal.

REMOVING CANVAS COVER AND RACK ASSEMBLIES (M101A2 AND M101A3) - Continued

WARNING

Side rack assembly weighs 100 lb (45 kg). Use extreme caution and get assistance when handling. Failure to comply may result in death or injury to personnel. Seek medical attention in the event of an injury.

16. Lift roadside side rack assembly (Figure 21, Item 2) from five stake pockets (Figure 21, Item 4) in cargo body (Figure 21, Item 3).
17. Repeat Step 16 for curbside side rack assembly (Figure 21, Item 1).

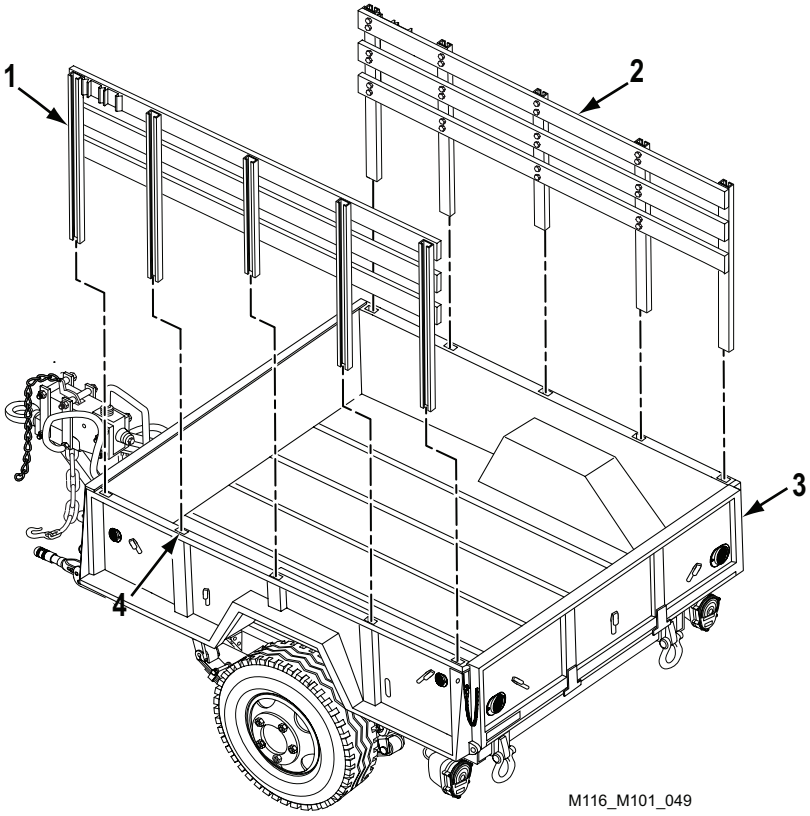

Figure 21. Side Rack Assembly Removal.

END OF TASK

END OF WORK PACKAGE

OPERATOR MAINTENANCE
OPERATION UNDER UNUSUAL CONDITIONS

INITIAL SETUP:

Materials/Parts
Degreasing solvent
(WP 0114, Table 1, Item 9)
Grease
(WP 0114, Table 1, Item 11)

References (cont.)
FM 9-207
TC 21-305-20
WP 0002
WP 0077

References
DA PAM 750-8

GENERAL

This section contains instructions for safely operating the M101 and M116 Series trailers under unusual conditions.

In addition to normal preventive maintenance, special care must be taken in regard to cleaning and lubrication to keep the trailers operational in extreme temperatures and humidity. Proper cleaning, lubrication, storage, and handling ensure proper operation and function and also guard against excessive wear.

Chronic failure of materiel resulting from exposure to extreme conditions must be reported in accordance with DA PAM 750-8, The Army Maintenance Management System (TAMMS) Users Manual.

OPERATION IN EXTREME COLD

1. For proper lubricants to use in extreme cold weather conditions, refer to the lubrication instructions in (WP 0077).
2. For special instructions on driving hazards that may be encountered during extreme cold weather conditions, refer to Operation and Maintenance of Ordnance Materiel in Cold Weather FM 9-207 and Manual for the Wheeled Vehicle Operator TC 21-305-20.
3. Extreme cold can cause insulation material on electrical harnesses and wires to crack, causing short circuits. Other materials can become hard, brittle, and easily damaged or broken.
4. Make sure tires are properly inflated (WP 0002). Tires may freeze to the ground or have flat spots if underinflated.
5. Brake shoes may freeze to the brake drum and will require preheating to prevent damage FM 9-207.

END OF TASK

OPERATION IN EXTREME HEAT

1. For proper lubrication during extreme heat conditions, refer to (WP 0077). Adequate lubrication is essential. Extreme heat will cause oil films to evaporate, resulting in inadequate lubrication.
2. Keep tires covered from direct sunlight to prevent increases in air pressure and deterioration of rubber.

END OF TASK

OPERATION IN HIGH HUMIDITY AND SALTWATER AREAS

1. Moist and salty areas can destroy the rust preventive qualities of oils and greases. When equipment is active, exposed surfaces should be cleaned and lubricated daily. For proper lubrication in high humidity and saltwater areas, refer to (WP 0077).
2. When equipment is inactive, unpainted parts should be coated with grease. All covers and caps should be in place.

END OF TASK

OPERATION IN MUD AND SNOW

1. After operation in mud or snow, have Field Maintenance pack wheel bearings as required (WP 0077).
2. For special instructions on driving hazards in snow, refer to TC 21-305-20. For better traction, reduce air pressure to 25 psi (172 kPa).
3. If one or more tires sink into mud or snow, it may be necessary to raise the tire and insert planking or matting beneath it.
4. Immediately after operation in mud and snow, thoroughly clean, inspect, and lubricate if tactical situation permits. For proper lubrication instructions, refer to (WP 0077).

END OF TASK

OPERATION IN DUSTY OR SANDY AREAS

1. Inspect, clean, and lubricate frequently when operating in sandy or dusty areas (WP 0077). For proper lubrication instructions, refer to (WP 0077).
2. Make sure no dust or sand enters exposed mechanisms or lubrication fittings during inspections and repair operations. Cover exposed parts with tarpaulins or other suitable cover during disassembly and assembly.
3. When beginning operation in dusty or sandy areas, remove lubricants from exposed components, such as landing gear, if tactical situation permits. Grease and oil will cause dust and sand to accumulate and act as an abrasive, which will cause rapid wear.
4. Reduce tire pressure to 30 psi (207 kPa) for emergency use on beach or desert sand. Return tire pressure to normal after emergency operation (WP 0002).

END OF TASK

OPERATION IN ROCKY TERRAIN

Use extreme caution when operating in rocky terrain. Make sure tires are fully inflated to minimize damage to tires and tubes (WP 0002).

END OF TASK

AT HALT/PARKING

1. For short shutdown periods, park in a sheltered spot out of the wind. For long shutdown periods, prepare a footing of planks or brush if high, dry ground is not available.
2. Remove all buildup of ice and snow as soon as possible after shutdown.

AT HALT/PARKING - Continued

3. Cover trailer with canvas cover assembly or tarpaulin, keeping the ends of the canvas off the ground to prevent freezing.

END OF TASK

FORDING

1. Refer to operating instructions in prime mover technical manual for information about fording operations.
2. Fording depth of the M101 and M116 Series trailers is limited to 30 inches (76.2 cm).
3. If tactical situation permits, perform the following services immediately after fording the trailer:

WARNING




- Solvent cleaning compound MIL-PRF-680 may be irritating to the eyes and skin. Use protective gloves and goggles. First aid for skin contact: remove contaminated clothing. Wash skin thoroughly with soap and water. First aid for eye contact: flush with water until irritation subsides. If symptoms persist, seek medical attention. Failure to comply may result in death or injury to personnel. Seek medical attention in the event of an injury.
- Use solvent cleaning compound MIL-PRF-680 in a well ventilated area. Use respirator as needed. Accidental ingestion can cause irritation of digestive tract and respiratory tract. May cause lung and central nervous system damage. Can be fatal if swallowed. Inhalation of high/massive concentrations can cause coma or be fatal. First aid for ingestion: do not induce vomiting. Seek immediate medical attention. First aid for inhalation: move to fresh air. If not breathing, provide artificial respiration. If symptoms persist, seek medical attention. Failure to comply may result in death or injury to personnel. Seek medical attention in the event of an injury.
- MIL-PRF-680 solvent is combustible; DO NOT use or store near heat, sparks, flame, or other ignition sources. Use mechanical ventilation whenever product is used in a confined space, heated above ambient temperatures, or agitated. Keep container sealed when not in use. Failure to comply may result in death or injury to personnel. Seek medical attention in the event of an injury.
- Improper cleaning methods and use of unauthorized cleaning liquids or solvents can injure personnel and damage equipment. Failure to comply may result in death or injury to personnel. Seek medical attention in the event of an injury.
- Rags saturated with solvent cleaning compound must be disposed of IAW authorized facility procedures. Failure to comply may result in death or injury to personnel. Seek medical attention in the event of an injury.
- Solvent cleaning compound MIL-PRF-680 is toxic and flammable. Always wear protective goggles and gloves, and use only in a well-ventilated area. Avoid contact with skin, eyes, and clothes, and DO NOT breathe vapors. DO NOT use near open flame or excessive heat. Failure to comply may result in death or injury to personnel. Seek medical attention in the event of an injury.

FORDING - Continued

a. Notify Field Maintenance to remove wheel and rim assemblies and clean them thoroughly with cleaning solvent. Dry all working components of handbrakes and wheel bearings. Lubricate handbrakes and underbody (WP 0077).

b. Immersion in saltwater greatly increases rusting and corrosion, especially on unpainted surfaces. Remove all traces of saltwater and salt deposits from all areas of the trailer. Apply grease to exposed areas of trailer. Notify Field Maintenance that complete disassembly and assembly may be needed.

END OF TASK

END OF WORK PACKAGE

OPERATOR MAINTENANCE
LOCATION AND CONTENTS OF DATA PLATES

M101A1, M101A2, AND M101A3 CARGO TRAILERS

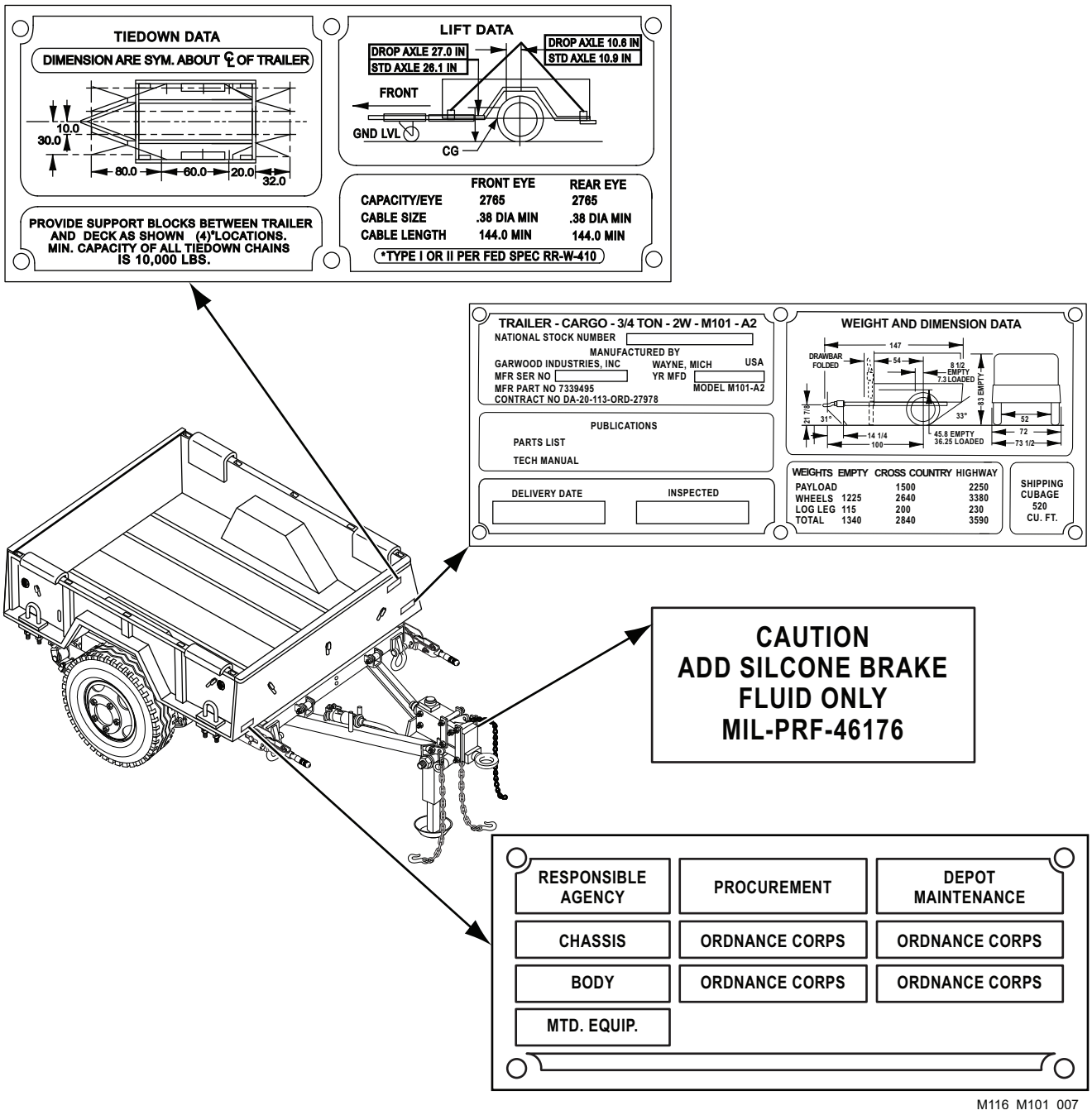

Figure 1. M101A1, M101A2, and M101A3 Cargo Trailers.

M116A1, M116A2, AND M116A3 CHASSIS TRAILERS

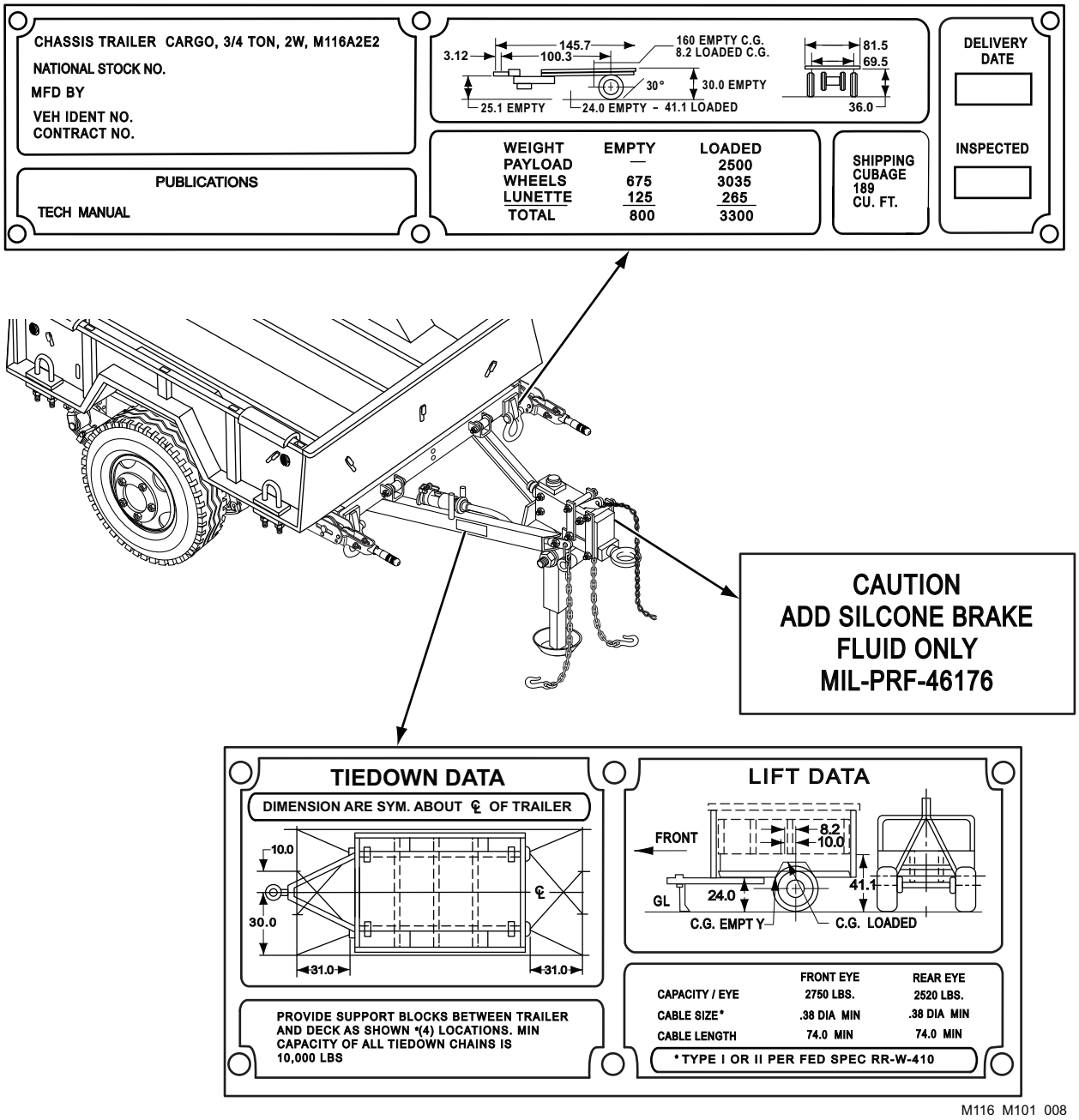

Figure 2. M116A1, M116A2, and M116A3 Chassis Trailers.

END OF WORK PACKAGE

CHAPTER 3

OPERATOR TROUBLESHOOTING PROCEDURES

OPERATOR MAINTENANCE
OPERATER INTRODUCTION TO TROUBLESHOOTING

GENERAL

This chapter provides information for identifying and correcting malfunctions that you may find while operating the trailer.

The Troubleshooting Index (WP 0009) lists common malfunctions that may occur and refers you to the proper page for a troubleshooting procedure. You should perform the tests/inspections and corrective actions in the order listed.

If you are unaware of the location of an item mentioned in troubleshooting, refer to (WP 0002) or (WP 0004).

Before performing troubleshooting, read and follow all safety instructions found in the Warning Summary at the front of this manual.

This chapter cannot list all malfunctions that may occur, nor all tests or inspections and corrective actions. If a malfunction is not listed, or is not corrected by the listed corrective actions, notify Field Maintenance.

When troubleshooting a malfunction:

1. Locate the symptom or symptoms in (WP 0009) that best describes the malfunction. If the appropriate symptom is not listed, notify Field Maintenance.
2. Troubleshooting procedures for the malfunction in question are described in explanation of columns listed below. Headings at the top of each page show how each troubleshooting procedure is organized: **Symptom, Malfunction**, and **Corrective Action**.
3. Perform each step in the order listed until the malfunction is corrected and the item being inspected is operational. DO NOT perform any maintenance task unless the troubleshooting procedure tells you to do so.

EXPLANATION OF COLUMNS

The columns in (WP 0010) through (WP 0014) are defined as follows:

SYMPTOM. A visual or operational indication that something is wrong with the equipment.

MALFUNCTION. Equipment defect that may cause the symptom.

CORRECTIVE ACTION. A procedure to correct the problem.

END OF WORK PACKAGE

OPERATOR MAINTENANCE
OPERATOR TROUBLESHOOTING INDEX

Malfunction/Symptom **Troubleshooting Procedure**

OPERATOR TROUBLESHOOTING INDEX

END OF WORK PACKAGE

OPERATOR MAINTENANCE
ONE OR BOTH TAILLIGHTS DO NOT WORK

INITIAL SETUP:

References
WP 0005

Equipment Condition
Trailer coupled to prime mover (WP 0005)

TROUBLESHOOTING PROCEDURE

WARNING

When troubleshooting electrical system or electrical components, be certain MASTER switch is OFF between every step unless otherwise directed. To prevent injury due to electrical shock, remove all jewelry and metal objects when working on electrical system. Failure to comply may result in death or injury to personnel. Seek medical attention in the event of an injury.

SYMPTOM

ONE OR BOTH TAILLIGHTS DO NOT WORK

MALFUNCTION

LIGHT PANEL SWITCH IN PRIME MOVER IN OFF POSITION

CORRECTIVE ACTION

1. Place the light panel switch in ON position in prime mover.
2. Verify problem is solved.

MALFUNCTION

INTERVEHICULAR CABLE IS NOT PROPERLY CONNECTED OR SECURED

CORRECTIVE ACTION

1. Disconnect intervehicular cable plug from prime mover receptacle and reconnect properly (WP 0005).
2. Verify problem is solved.
3. If one or both taillights still do not work, notify Field Maintenance.

END OF WORK PACKAGE

OPERATOR MAINTENANCE
BRAKES WILL NOT RELEASE

INITIAL SETUP:

References
WP 0005

Equipment Condition
Trailer coupled to prime mover (WP 0005)

TROUBLESHOOTING PROCEDURE

SYMPTOM

BRAKES WILL NOT RELEASE

MALFUNCTION

HANDBRAKES NOT FULLY RELEASED

CORRECTIVE ACTION

1. Fully release handbrake lever (WP 0005).
2. Verify problem is solved.

MALFUNCTION

BREAKAWAY LEVER IS RELEASED

CORRECTIVE ACTION

If breakaway lever is released, notify Field Maintenance.

END OF WORK PACKAGE

OPERATOR MAINTENANCE
TIRE WEAR IS ABNORMAL OR UNEVEN

INITIAL SETUP:

References
WP 0002

Equipment Condition
Trailer coupled to prime mover (WP 0005)

TROUBLESHOOTING PROCEDURE

SYMPTOM

TIRE WEAR IS ABNORMAL OR UNEVEN

MALFUNCTION

TIRE PRESSURE IS INCORRECT

CORRECTIVE ACTION

1. Inflate tires to proper pressure (WP 0002).
2. Verify problem is solved.

MALFUNCTION

TRAILER IS OVERLOADED

CORRECTIVE ACTION

1. Reduce load to proper payload (WP 0002).
2. Verify problem is solved.

END OF WORK PACKAGE

OPERATOR MAINTENANCE
FRAME RESTS ON SPRING BUMPER

INITIAL SETUP:

References
WP 0002

Equipment Condition
Trailer coupled to prime mover (WP 0005)

TROUBLESHOOTING PROCEDURE

SYMPTOM

FRAME RESTS ON SPRING BUMPER

MALFUNCTION

TRAILER IS OVERLOADED

CORRECTIVE ACTION

1. Reduce load to proper payload (WP 0002).
2. Verify problem is solved.

END OF WORK PACKAGE

OPERATOR MAINTENANCE
TRAILER SWAYS

INITIAL SETUP:

References
WP 0002

Equipment Condition
Trailer coupled to prime mover (WP 0005)

TROUBLESHOOTING PROCEDURE

SYMPTOM

TRAILER SWAYS

MALFUNCTION

TRAILER IS OVERLOADED

CORRECTIVE ACTION

1. Reduce load to proper payload (WP 0002).
2. Verify problem is solved.

MALFUNCTION

UNEVEN LOAD DISTRIBUTION

CORRECTIVE ACTION

1. Distribute evenly.
2. Verify problem is solved.

END OF WORK PACKAGE

CHAPTER 4

FIELD TROUBLESHOOTING PROCEDURES

FIELD MAINTENANCE
FIELD INTRODUCTION TO TROUBLESHOOTING

GENERAL

This chapter provides information for identifying and correcting malfunctions that you may find while operating the trailer.

The Troubleshooting Index (WP 0016) lists common malfunctions that may occur and refers you to the proper page for a troubleshooting procedure. You should perform the tests/inspections and corrective actions in the order listed.

If you are unaware of the location of an item mentioned in troubleshooting, refer to (WP 0002) or (WP 0004).

Before performing troubleshooting, read and follow all safety instructions found in the Warning Summary at the front of this manual.

This chapter cannot list all malfunctions that may occur, nor all tests or inspections and corrective actions. If a malfunction is not listed, or is not corrected by the listed corrective actions, notify Field Maintenance.

When troubleshooting a malfunction:

1. Locate the symptom or symptoms in (WP 0016) that best describes the malfunction. If the appropriate symptom is not listed, notify Supervisor.
2. Troubleshooting procedures for the malfunction in question are described in explanation of columns listed below. Headings at the top of each page show how each troubleshooting procedure is organized: **Symptom, Malfunction**, and **Corrective Action**.
3. Perform each step in the order listed until the malfunction is corrected and the item being inspected is operational. DO NOT perform any maintenance task unless the troubleshooting procedure tells you to do so.

EXPLANATION OF COLUMNS

The columns in (WP 0017) through (WP 0030) are defined as follows:

SYMPTOM. A visual or operational indication that something is wrong with the equipment.

MALFUNCTION. Equipment defect that may cause the symptom.

CORRECTIVE ACTION. A procedure to correct the problem.

END OF WORK PACKAGE

FIELD MAINTENANCE
FIELD TROUBLESHOOTING INDEX

Malfunction/Symptom **Troubleshooting Procedure**

FIELD TROUBLESHOOTING INDEX

END OF WORK PACKAGE

FIELD MAINTENANCE
ONE OR BOTH TAILLIGHTS DO NOT WORK

INITIAL SETUP:

References
WP 0037
WP 0040
WP 0041

Equipment Condition
Trailer coupled to prime mover (WP 0005)

TROUBLESHOOTING PROCEDURE

WARNING

When troubleshooting electrical system or electrical components, be certain MASTER switch is OFF between every step unless otherwise directed. To prevent injury due to electrical shock, remove all jewelry and metal objects when working on electrical system. Failure to comply may result in death or injury to personnel. Seek medical attention in the event of an injury.

SYMPTOM

BOTH TAILLIGHTS DO NOT WORK

MALFUNCTION

PRIME MOVER LIGHTS ARE NOT WORKING

CORRECTIVE ACTION

1. Refer to technical manual (TM) for prime mover to troubleshoot prime mover's lights.
2. Verify problem is solved.

MALFUNCTION

TRIPPED CIRCUIT BREAKERS IN PRIME MOVER

CORRECTIVE ACTION

1. Reset circuit breakers according to procedures in TM for prime mover.
2. Verify problem is solved.

MALFUNCTION

PRIME MOVER RECEPTACLE HAS INCORRECT VOLTAGE

CORRECTIVE ACTION

1. Check prime mover receptacle for correct voltage (refer to TM for prime mover).
2. If prime mover voltage is correct, reconnect harness.
3. If prime mover voltage is incorrect, troubleshoot prime mover wiring harness or electrical system (refer to TM for prime mover).
4. Verify problem is solved.

MALFUNCTION

INTERVEHICULAR CABLE HAS INCORRECT VOLTAGE

CORRECTIVE ACTION

1. Disconnect intervehicular wiring harness from chassis wiring harness. Check intervehicular wiring harness for correct voltage (24 VDC).
2. If voltage is 24 VDC, reconnect harness.
3. If voltage is not 24 VDC, repair or replace intervehicular cable (WP 0041).
4. Verify problem is solved.

MALFUNCTION

DISCONNECT CHASSIS WIRING HARNESS FROM TAILLIGHT CONNECTORS. CHECK CHASSIS WIRING HARNESS FOR CORRECT VOLTAGE (24 VDC)

CORRECTIVE ACTION

1. Disconnect chassis wiring harness from taillight connectors. Check chassis wiring harness for correct voltage (24 VDC).
2. If 24 VDC is present, repair or replace composite stoplight-taillight (WP 0037).
3. If 24 VDC is not present, repair or replace chassis wiring harness (WP 0040).
4. Verify problem is solved.

SYMPTOM

ONE TAILLIGHT DOES NOT WORK

MALFUNCTION

DAMAGED CONNECTORS OR WIRES AT NONFUNCTIONING TAILLIGHT

CORRECTIVE ACTION

1. Repair or replace damaged wires or connectors at taillight (WP 0037).
2. Verify problem is solved.

MALFUNCTION

CHASSIS WIRING HARNESS VOLTAGE NOT CONSISTENT

CORRECTIVE ACTION

1. Check ground wire for proper connection.
2. Verify problem is solved.
3. If light is still not working, disconnect chassis wiring harness from nonfunctioning taillight. Check chassis wiring harness for correct voltage (24 VDC).
4. If 24 VDC is present, replace composite stoplight taillight (WP 0037).
5. If 24 VDC is not present, repair or replace chassis wiring harness from splice to taillight.
6. Verify problem is solved.

END OF WORK PACKAGE

FIELD MAINTENANCE
LAMPS/LED'S ARE DIM OR FLICKERING

INITIAL SETUP:

References
WP 0037
WP 0040
WP 0041

Equipment Condition
Trailer coupled to prime mover (WP 0005)

TROUBLESHOOTING PROCEDURE

WARNING

When troubleshooting electrical system or electrical components, be certain MASTER switch is OFF between every step unless otherwise directed. To prevent injury due to electrical shock, remove all jewelry and metal objects when working on electrical system. Failure to comply may result in death or injury to personnel. Seek medical attention in the event of an injury.

SYMPTOM

LAMPS/LED'S ARE DIM OR FLICKERING

MALFUNCTION

TAILLIGHT HOUSING IS LOOSE

CORRECTIVE ACTION

1. Secure composite stoplight-taillight to bracket (WP 0037).
2. Verify problem is solved.

MALFUNCTION

DAMAGED CONNECTORS OR WIRES AT TAILLIGHT

CORRECTIVE ACTION

1. Repair or replace damaged connectors or wires (WP 0037).
2. Verify problem is solved.

MALFUNCTION

CORRECT VOLTAGE NOT PRESENT AT PRIME MOVER RECEPTACLE

CORRECTIVE ACTION

1. Disconnect intervehicular cable at prime mover receptacle.
2. Check prime mover receptacle for correct voltage (24 VDC). Repair or replace intervehicular cable if voltage is incorrect (WP 0041).
3. Reconnect intervehicular cable to prime mover receptacle.
4. Verify problem is solved.
5. If lamps/LED'S are still dim or flickering, troubleshoot prime mover electrical system (refer to TM for prime mover).
6. Verify problem is solved.

MALFUNCTION

CHASSIS WIRING HARNESS CONNECTORS ARE DIRTY, CORRODED, OR HAVE BENT PINS

CORRECTIVE ACTION

1. Disconnect intervehicular cable from chassis wiring harness.
2. Check chassis wiring harness connectors for dirt or corrosion. Clean chassis wiring harness connectors if dirt or corrosion is present.
3. Check chassis wiring harness connectors for bent pins. Repair or replace chassis wiring harness connectors if pins are bent.
4. Reconnect intervehicular cable to chassis wiring harness.
5. Verify problem is solved.

MALFUNCTION

INTERVEHICULAR CABLE GROUND TERMINAL IS DAMAGED OR DISCONNECTED

CORRECTIVE ACTION

1. Check to see if ground terminal lug at junction on roadside drawbar is connected and in good condition.
2. Check ground terminal wire for continuity. If no continuity, repair or replace ground terminal (WP 0041).
3. Verify problem is solved.

MALFUNCTION

DEFECTIVE OR BROKEN LAMPS OR LED'S INSIDE TAILLIGHT

CORRECTIVE ACTION

1. Replace defective or broken lamps or LED'S.
2. Verify problem is solved.

MALFUNCTION

CHASSIS WIRING HARNESS IS DEFECTIVE

CORRECTIVE ACTION

1. Disconnect chassis wiring harness from taillights and intervehicular cable.
2. Check chassis wiring harness for continuity. If no continuity, repair or replace chassis wiring harness (WP 0040).
3. Reconnect chassis wiring harness to taillight and intervehicular cable.
4. Verify problem is solved.

END OF WORK PACKAGE

FIELD MAINTENANCE
AXLE IS LOOSE OR OUT OF ALIGNMENT

INITIAL SETUP:

References
WP 0042
WP 0058
WP 0065

TROUBLESHOOTING PROCEDURE

SYMPTOM

AXLE IS LOOSE OR OUT OF ALIGNMENT

MALFUNCTION

LOOSE U-BOLTS AT SPRING ASSEMBLY AND AXLE

CORRECTIVE ACTION

1. Tighten U-bolts (WP 0065).
2. Verify problem is solved.

MALFUNCTION

BROKEN U-BOLTS AT SPRING ASSEMBLY AND AXLE

CORRECTIVE ACTION

1. Replace broken U-bolts (WP 0065).
2. Verify problem is solved.

MALFUNCTION

BENT OR BROKEN SHACKLES AT REAR SPRING HANGERS

CORRECTIVE ACTION

1. Replace bent or broken shackles (WP 0058).
2. Verify problem is solved.

MALFUNCTION

BENT OR BROKEN SPRING HANGER

CORRECTIVE ACTION

1. Replace bent or broken spring hanger (WP 0058).
2. Verify problem is solved.

MALFUNCTION

BENT AXLE

CORRECTIVE ACTION

1. Replace bent axle (WP 0042).
2. Verify problem is solved.

END OF WORK PACKAGE

FIELD MAINTENANCE
HANDBRAKES WILL NOT OPERATE

INITIAL SETUP:

References
WP 0044
WP 0047

References (cont.)
WP 0048
WP 0077

TROUBLESHOOTING PROCEDURE

SYMPTOM

HANDBRAKES WILL NOT OPERATE

MALFUNCTION

SEIZED OR DAMAGED HANDBRAKE LEVER(S)

CORRECTIVE ACTION

1. Lubricate seized handbrake lever(s) (WP 0077).
2. Replace damaged handbrake lever(s) (WP 0044).
3. Verify problem is solved.

MALFUNCTION

SEIZED OR BROKEN CABLE ASSEMBLY

CORRECTIVE ACTION

1. Lubricate cable assembly if seized (WP 0077).
2. Replace cable assembly if damaged (WP 0044).
3. Verify problem is solved.

MALFUNCTION

HANDBRAKE LEVERS DO NOT OPERATE SERVICE BRAKE

CORRECTIVE ACTION

1. Adjust service brake (WP 0047) or (WP 0048).
2. Verify problem is solved.

END OF WORK PACKAGE

FIELD MAINTENANCE
BRAKES WILL NOT RELEASE

INITIAL SETUP:

References
WP 0043
WP 0044
WP 0045
WP 0046

References (cont.)
WP 0047
WP 0048
WP 0055
WP 0077

TROUBLESHOOTING PROCEDURE

SYMPTOM

BRAKES WILL NOT RELEASE

MALFUNCTION

HANDBRAKE LEVER IS OUT OF ADJUSTMENT

CORRECTIVE ACTION

1. Adjust handbrake lever (WP 0043)
2. Verify problem is solved.

MALFUNCTION

SEIZED OR DAMAGED HANDBRAKE LEVER(S)

CORRECTIVE ACTION

1. Lubricate seized handbrake lever(s) (WP 0077).
2. Verify problem is solved.
3. Replace damaged handbrake lever(s) (WP 0044).
4. Verify problem is solved.

MALFUNCTION

SERVICE BRAKE IS OUT OF ADJUSTMENT

CORRECTIVE ACTION

1. Adjust service brake (WP 0047) or (WP 0048).
2. Verify problem is solved.

MALFUNCTION

SERVICE BRAKE IS DAMAGED

CORRECTIVE ACTION

1. Replace damaged service brake (WP 0045) or (WP 0046).
2. Verify problem is solved.
3. If brakes still will not release, notify Supervisor.

END OF WORK PACKAGE

FIELD MAINTENANCE
BRAKES DO NOT HOLD TRAILER

INITIAL SETUP:

References
WP 0043
WP 0047
WP 0048
WP 0054
WP 0055

Equipment Condition
Trailer coupled to prime mover (WP 0005)

TROUBLESHOOTING PROCEDURE

SYMPTOM

BRAKES DO NOT HOLD TRAILER

MALFUNCTION

HANDBRAKE LEVER IS OUT OF ADJUSTMENT

CORRECTIVE ACTION

1. Adjust handbrake lever (WP 0043).
2. Verify problem is solved.

MALFUNCTION

SERVICE BRAKE OUT OF ADJUSTMENT

CORRECTIVE ACTION

1. Adjust service brake (WP 0047) or (WP 0048).
2. Verify problem is solved.

MALFUNCTION

SERVICE BRAKE DAMAGED

CORRECTIVE ACTION

1. Replace damaged service brake (WP 0047) or (WP 0048).
2. Verify problem is solved.

MALFUNCTION

SCORED BRAKE DRUM(S)

CORRECTIVE ACTION

1. Replace scored brake drum (WP 0054) or (WP 0055).
2. Verify problem is solved.

END OF WORK PACKAGE

FIELD MAINTENANCE
HYDRAULIC BRAKE SYSTEM WILL NOT OPERATE

INITIAL SETUP:

References
WP 0050
WP 0051
WP 0052
WP 0053

Equipment Condition
Trailer coupled to prime mover (WP 0005)

TROUBLESHOOTING PROCEDURE

SYMPTOM

HYDRAULIC BRAKE SYSTEM WILL NOT OPERATE

MALFUNCTION

BRAKE FLUID LOW IN MASTER CYLINDER

CORRECTIVE ACTION

1. Service master cylinder (WP 0051).
2. Verify problem is solved.

MALFUNCTION

HYDRAULIC BRAKE LINES OR FITTINGS LEAKING

CORRECTIVE ACTION

1. Tighten or replace hydraulic brake line and fitting assemblies (WP 0052). Bleed hydraulic brake system (WP 0053).
2. Verify problem is solved.

MALFUNCTION

HYDRAULIC BRAKE ACTUATOR ASSEMBLY DAMAGED

CORRECTIVE ACTION

1. Repair or replace hydraulic brake actuator assembly (WP 0050).
2. Verify problem is solved.

END OF WORK PACKAGE

FIELD MAINTENANCE
TIRE WEAR IS ABNORMAL OR UNEVEN

INITIAL SETUP:

References
WP 0034
WP 0042
WP 0054
WP 0055
WP 0058

References (cont.)
WP 0061
WP 0065

Equipment Condition
Trailer coupled to prime mover (WP 0005)

TROUBLESHOOTING PROCEDURE

SYMPTOM

TIRE WEAR IS ABNORMAL OR UNEVEN

MALFUNCTION

WHEELS ARE BENT

CORRECTIVE ACTION

1. Replace wheel assembly (WP 0034).
2. Verify problem is solved.

MALFUNCTION

WHEEL BEARINGS NOT PROPERLY ADJUSTED

CORRECTIVE ACTION

1. Adjust wheel bearings (WP 0054) or (WP 0055).
2. Verify problem is solved.

MALFUNCTION

WHEEL BEARINGS ARE DAMAGED

CORRECTIVE ACTION

1. Replace damaged wheel bearings (WP 0054) or (WP 0055).
2. Verify problem is solved.

MALFUNCTION

LOOSE U-BOLTS AT SPRING ASSEMBLY AND AXLE

CORRECTIVE ACTION

1. Tighten U-bolts (WP 0065).
2. Verify problem is solved.

MALFUNCTION

BROKEN U-BOLTS AT SPRING ASSEMBLY AND AXLE

CORRECTIVE ACTION

1. Replace broken U-bolts (WP 0065).
2. Verify problem is solved.

MALFUNCTION

BENT OR BROKEN SPRING SHACKLES OR SPRING HANGERS

CORRECTIVE ACTION

1. Replace bent or broken shackles or spring hangers (WP 0058).
2. Verify problem is solved.

MALFUNCTION

BENT, TWISTED, OR DAMAGED DRAWBAR

CORRECTIVE ACTION

1. Replace drawbar (WP 0061).
2. Verify problem is solved.

MALFUNCTION

BENT OR DAMAGED AXLE

CORRECTIVE ACTION

1. Replace axle (WP 0042).
2. Verify problem is solved.

END OF WORK PACKAGE

FIELD MAINTENANCE
WHEEL IS WOBBLY

INITIAL SETUP:

References
WP 0034
WP 0054
WP 0055

Equipment Condition
Trailer coupled to prime mover (WP 0005)

TROUBLESHOOTING PROCEDURE

SYMPTOM

WHEEL IS WOBBLY

MALFUNCTION

MISSING OR LOOSE WHEEL NUTS

CORRECTIVE ACTION

1. Replace missing nuts or tighten loose nuts (WP 0034).
2. Verify problem is solved.

MALFUNCTION

WHEEL IS BENT

CORRECTIVE ACTION

1. Replace bent wheel assembly (WP 0034).
2. Verify problem is solved.

MALFUNCTION

WHEEL BEARINGS NOT PROPERLY ADJUSTED

CORRECTIVE ACTION

1. Adjust wheel bearings (WP 0054) or (WP 0055).
2. Verify problem is solved.

MALFUNCTION

WHEEL BEARINGS ARE DAMAGED

CORRECTIVE ACTION

1. Replace damaged wheel bearings and adjust new wheel bearings (WP 0054) or (WP 0055).
2. Verify problem is solved.

END OF WORK PACKAGE

FIELD MAINTENANCE
FRONT SUPPORT LEG WILL NOT SWING UP OR DOWN

INITIAL SETUP:

References
WP 0062
WP 0063
WP 0077

Equipment Condition
Trailer coupled to prime mover (WP 0005)

TROUBLESHOOTING PROCEDURE

SYMPTOM

FRONT SUPPORT LEG WILL NOT SWING UP OR DOWN

MALFUNCTION

RELEASE LEVER DOES NOT OPERATE

CORRECTIVE ACTION

1. Lubricate release lever (WP 0077).
2. Verify problem is solved.

MALFUNCTION

RELEASE LEVER IS DAMAGED

CORRECTIVE ACTION

1. If release lever is damaged, replace bracket and release lever assembly (WP 0062) or (WP 0063).
2. Verify problem is solved.

END OF WORK PACKAGE

FIELD MAINTENANCE
REAR STABILIZER WILL NOT OPERATE

INITIAL SETUP:

References
WP 0073
WP 0077

Equipment Condition
Trailer coupled to prime mover (WP 0005)

TROUBLESHOOTING PROCEDURE

SYMPTOM

REAR STABILIZER WILL NOT OPERATE

MALFUNCTION

RELEASE HANDLE DOES NOT OPERATE

CORRECTIVE ACTION

1. Lubricate release handle (WP 0077).
2. Verify problem is solved.

MALFUNCTION

THREADED LEG DOES NOT WORK WHEN FOOT ASSEMBLY IS TURNED

CORRECTIVE ACTION

1. Lubricate threaded leg (WP 0077).
2. Verify problem is solved.
3. Replace damaged rear stabilizer (WP 0073).
4. Verify problem is solved.

END OF WORK PACKAGE

FIELD MAINTENANCE
FRAME RESTS ON SPRING BUMPER

INITIAL SETUP:

References
WP 0065
WP 0066

Equipment Condition
Trailer coupled to prime mover (WP 0005)

TROUBLESHOOTING PROCEDURE

SYMPTOM

FRAME RESTS ON SPRING BUMPER

MALFUNCTION

DAMAGED SHOCK ABSORBER

CORRECTIVE ACTION

1. Replace shock absorber (WP 0066).
2. Verify problem is solved.

MALFUNCTION

DAMAGED SPRING ASSEMBLY

CORRECTIVE ACTION

1. Replace spring assembly (WP 0065).
2. Verify problem is solved.

END OF WORK PACKAGE

FIELD MAINTENANCE
TRAILER SWAYS

INITIAL SETUP:

References
WP 0042
WP 0061
WP 0065
WP 0066
WP 0077

Equipment Condition
Trailer coupled to prime mover (WP 0005)

TROUBLESHOOTING PROCEDURE

SYMPTOM

TRAILER SWAYS

MALFUNCTION

DRY SPRING SHACKLES

CORRECTIVE ACTION

1. Lubricate shackle pins (WP 0077).
2. Verify problem is solved.

MALFUNCTION

LOOSE SELF-LOCKING NUTS ON DRAWBAR

CORRECTIVE ACTION

1. Tighten self-locking nuts on drawbar (WP 0061).
2. Verify problem is solved.

MALFUNCTION

LOOSE SELF-LOCKING NUTS THAT MOUNT SHOCK ABSORBERS

CORRECTIVE ACTION

1. Tighten self-locking nuts (WP 0066).
2. Verify problem is solved.

MALFUNCTION

LEAKING OR DAMAGED SHOCK ABSORBERS

CORRECTIVE ACTION

1. Replace shock absorbers (WP 0066).
2. Verify problem is solved.

MALFUNCTION

LOOSE U-BOLTS AT SPRING ASSEMBLY AND AXLE

CORRECTIVE ACTION

1. Tighten loose U-bolts at spring assembly and axle (WP 0065) and (WP 0042).
2. Verify problem is solved.

MALFUNCTION

LOOSE PINS AT SPRING SHACKLES

CORRECTIVE ACTION

1. Tighten loose spring shackles (WP 0065).
2. Verify problem is solved.

MALFUNCTION

BROKEN SPRING SHACKLE

CORRECTIVE ACTION

1. Replace spring shackles (WP 0065).
2. Verify problem is solved.

CORRECTIVE ACTION - Continued

MALFUNCTION

BROKEN U-BOLTS AT SPRING ASSEMBLY AND AXLE

CORRECTIVE ACTION

1. Replace broken U-bolts at spring assembly and axle (WP 0065) and (WP 0042).
2. Verify problem is solved.

MALFUNCTION

BROKEN SPRING LEAVES

CORRECTIVE ACTION

1. Replace spring assembly (WP 0065).
2. Verify problem is solved.

END OF WORK PACKAGE

FIELD MAINTENANCE
SPRING ASSEMBLY IS NOISY

INITIAL SETUP:

References
WP 0065
WP 0077

Equipment Condition
Trailer coupled to prime mover (WP 0005)

TROUBLESHOOTING PROCEDURE

SYMPTOM

SPRING ASSEMBLY IS NOISY

MALFUNCTION

SPRING SHACKLES ARE DRY

CORRECTIVE ACTION

1. Lubricate shackle pins (WP 0077).
2. Verify problem is solved.

MALFUNCTION

LOOSE U-BOLTS AT SPRING ASSEMBLY AND AXLE

CORRECTIVE ACTION

1. Tighten U-bolts (WP 0065).
2. Verify problem is solved.

MALFUNCTION

LOOSE SHACKLE PINS

CORRECTIVE ACTION

1. Check for loose nuts.
2. Tighten nuts (WP 0065).
3. Verify problem is solved.
4. Replace loose shackle pins (WP 0065).
5. Verify problem is solved.

MALFUNCTION

SPRING ASSEMBLY COMPONENTS WORN OR DAMAGED

CORRECTIVE ACTION

1. Inspect spring assembly for broken spring leaves, loose or broken center bolt head, and worn or loose bushings.
2. Replace spring assembly components (WP 0065).
3. Verify problem is solved.

END OF WORK PACKAGE

CHAPTER 5

PMCS MAINTENANCE INSTRUCTIONS

OPERATOR MAINTENANCE
PREVENTIVE MAINTENANCE CHECKS AND SERVICES (PMCS) INTRODUCTION

GENERAL

To ensure that the M101 and M116 Series trailers are ready for operation at all times, they must be inspected on a regular basis so that defects may be found before they result in serious damage, equipment failure, or injury to personnel. This section contains systematic instructions on inspections, adjustments, and corrections to be performed by the Operator and Field Maintenance personnel.

While performing preventive maintenance checks and services (PMCS), read and follow all safety instructions found in the warning summary at the beginning of this manual. Keep in mind all WARNINGs and CAUTIONs.

SERVICE INTERVALS

Perform the PMCS procedures listed in (WP 0032) or (WP 0033) at the following intervals:

Perform **Before** PMCS just before operating the trailer.
Perform **During** PMCS while operating the trailer.
Perform **Weekly** PMCS once each week.
Perform **Monthly** PMCS once each month.
Perform **Semiannual** PMCS procedures once every six months.
Perform **Annual** PMCS procedures once each year.

REPORTING REPAIRS

All defects that the operator cannot fix must be reported on a DA Form 2404, Equipment Inspection and Maintenance Worksheet, immediately after completing PMCS. If a serious problem is found, IMMEDIATELY report it to your Supervisor.

GENERAL PMCS PROCEDURES

Keep equipment clean. Dirt, oil, and debris may cover up a serious problem. Clean as you work and as needed. Use cleaning solvent (WP 0114, Table 1, Item 9) on all metal surfaces. Use general purpose detergent (WP 0114, Table 1, Item 8) and water on rubber, plastic, and painted surfaces.

While performing specific PMCS procedures, inspect the following components:

Bolts, Nuts, and Screws. Make sure they are not loose, missing, bent, or broken. Tighten any that are loose. Report loose or missing bolts, nuts, and screws to Field Maintenance.

Welds. Inspect for gaps where parts are welded together. Check for loose or chipped paint, rust, and cracks. Report bad welds to Field Maintenance.

Wiring Harness, Wires, and Connectors. Inspect for cracked or broken wiring harness insulation, bare wires, and loose or broken connectors. Repair or replace as necessary. Report loose connections and faulty wiring to Field Maintenance.

Hydraulic Brake Lines and Fittings. Inspect for wear, damage, and leaks. Make sure fittings are tight. Report any damage, leaks, or loose fittings to Field Maintenance. If a leak originates from a loose fitting, tighten it. If a component is broken or worn, correct the problem if authorized by the Maintenance Allocation Chart (MAC) (WP 0111). If not authorized, report it to your Supervisor.

Check to see that components are adequately lubricated in accordance with Lubrication Instructions (WP 0077).

SPECIFIC PMCS PROCEDURES

Operator and Field PMCS procedures are provided in (WP 0032) and (WP 0033). Always perform PMCS procedures in the order listed. Once the procedures become routine, problems can be easily recognized.

Before performing PMCS, read all the checks required for the applicable interval and prepare all the tools needed for the task. Have several soft cloth rags (WP 0114, Table 1, Item 24) ready for use. Perform ALL inspections at the applicable intervals.

If any problems are discovered through PMCS, perform the appropriate troubleshooting task (WP 0009). If any component or system is not serviceable, or if a given service does not correct the problem, notify your Supervisor.

Explanations of the column headings in (WP 0032) and (WP 0033) are as follows:

Item No. The item number column of your PMCS table is to be used for reference. When completing DA Form 2404, include the item number for the check/service indicating a fault. Item numbers also appear in the order that you must do checks and services for the interval listed.

Interval. This column of your PMCS table tells you when to do a certain check or service.

Item To Check/Service. This column names the item to be checked or serviced.

Procedure. This column tells you how to do the required checks and services. Follow these instructions carefully. If tools are not available or if the procedure says to, have Field Maintenance do the work.

NOTE

The term mission capable refers to equipment being on hand and able to perform its combat mission, refer to AR 700-138, Army Logistics Readiness and Sustainability.

Not Fully Mission Capable If: Information in this column tells you what faults will keep the equipment from being capable of performing its mission. If PMCS reveals faults listed in this column, do not operate the equipment. Follow standard operating procedures for maintaining the equipment or reporting equipment failures.

LEAKAGE DEFINITIONS

It is important to know how fluid leakage affects the status of the trailer. The following are types/classes of leakage an operator must know to determine if the trailer is mission capable. Learn these leakage definitions. When in doubt, notify Supervisor.

1. Class I Seepage of fluid (as indicated by wetness or discoloration) not great enough to form drops.
2. Class II Leakage of fluid great enough to form drops, but not enough to cause drops to drip from item being checked/inspected.
3. Class III Leakage of fluid great enough to form drops that fall from item being checked/inspected.

Equipment operation is allowed with minor (Class I or II) leakage. Fluid levels in an item/system affected with such leakage must be checked more frequently than required in PMCS. When in doubt, notify Supervisor.

Report Class III leaks IMMEDIATELY to Supervisor or Field Maintenance.

END OF WORK PACKAGE

OPERATOR MAINTENANCE
OPERATOR PREVENTIVE MAINTENANCE CHECKS AND SERVICES (PMCS) PROCEDURES

INITIAL SETUP:

References
WP 0002
WP 0005
WP 0034

Table 1. Operator Preventive Maintenance Checks and Services (PMCS) for the M101 and M116 Series Trailers.

ITEM NO.	INTERVAL	ITEM TO BE CHECKED OR SERVICED	PROCEDURE	EQUIPMENT NOT READY/ AVAILABLE IF:
			NOTE Perform Weekly as well as Before PMCS if you are the assigned operator but have not operated the trailer since the last Weekly PMCS, or if you are operating the trailer for the first time.	
1	Before	Wheel Assembly	**NOTE** Lug nuts are turned clockwise to tighten and counterclockwise to loosen.	
			a. Check wheels for damage and loose or missing lug nuts (WP 0034).	a. One wheel is damaged. One lug nut is loose or missing.
			b. Check tires for cuts, foreign objects, or unusual tread wear. Remove any stones from between treads.	b. One tire is flat, missing, or unserviceable.

Table 1. Operator Preventive Maintenance Checks and Services (PMCS) for the M101 and M116 Series Trailers - Continued.

ITEM NO.	INTERVAL	ITEM TO BE CHECKED OR SERVICED	PROCEDURE	EQUIPMENT NOT READY/ AVAILABLE IF:
2	Before	Drawbar Coupler, Intervehicular Cable, and Safety Chains	a. Check drawbar coupler (Figure 1, Item 1) for secure mounting and obvious damage.	a. Drawbarcoupler is loose or bent; missing nuts/bolts or mounting hardware.
			b. Check intervehicular cable (Figure 1, Item 3) for cuts and breaks.	
			c. Check safety chains (Figure 1, Item 2) for secure mounting and obvious damage.	c. Safety chains are missing or unsecured.
3	Before	Brake System	a. Test brake system by coupling trailer to prime mover (WP 0005).	a. Service brakes fail to operate.
			b. Check for brake fluid leakage from master cylinder, hydraulic brake tube assemblies, hydraulic brake hoses, and fittings (WP 0002).	b. Any leaks are found.

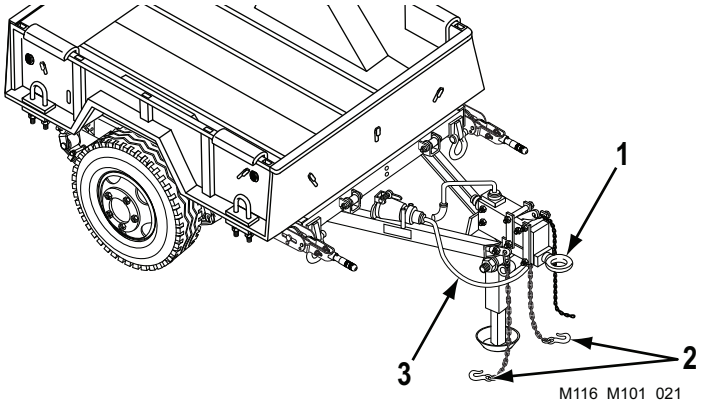

Figure 1. Drawbar Coupler, Intervehicular Cable, and Safety Chain Check.

Table 1. Operator Preventive Maintenance Checks and Services (PMCS) for the M101 and M116 Series Trailers - Continued.

ITEM NO.	INTERVAL	ITEM TO BE CHECKED OR SERVICED	PROCEDURE	EQUIPMENT NOT READY/ AVAILABLE IF:
4	Before	Handbrakes	With trailer coupled to prime mover, apply handbrakes (WP 0005). Move trailer slightly to see if handbrakes hold the wheels.	
5	Before	Canvas Cover Assembly	a. Check for missing or unserviceable tiedown straps and snap fasteners (Figure 2, Item 1). b. Check for missing or unserviceable ropes (Figure 2, Item 3). c. Check for missing or unserviceable straps and buckles (Figure 2, Item 2). d. Check for ripped seams and tears.	

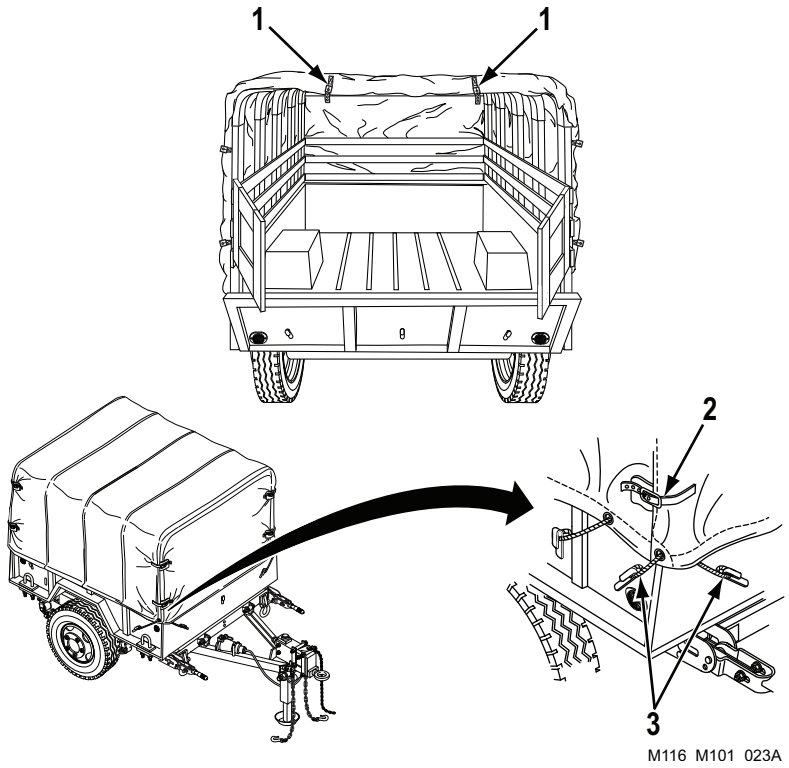

Figure 2. Rope, Tiedown Strap, and Snap Fastener Check.

Table 1. Operator Preventive Maintenance Checks and Services (PMCS) for the M101 and M116 Series Trailers - Continued.

ITEM NO.	INTERVAL	ITEM TO BE CHECKED OR SERVICED	PROCEDURE	EQUIPMENT NOT READY/ AVAILABLE IF:
6	Before	Rear Rack Assembly (M101A2 and M101A3)	a. Check for unserviceable slats (Figure 3, Item 1). b. Check for missing or unserviceable strap hinge assemblies (Figure 3, Item 2). c. Check for missing or unserviceable strap latch assemblies (Figure 3, Item 3).	
7	Before	Front Rack (M101A2 and M101A3)	a. Check for unserviceable slats (Figure 3, Item 1). b. Check for missing or unserviceable strap hinge assemblies (Figure 3, Item 2).	
8	Before	Bow Assembly (M101A2 and M101A3)	Inspect for unserviceable bow assemblies (Figure 3, Item 4).	

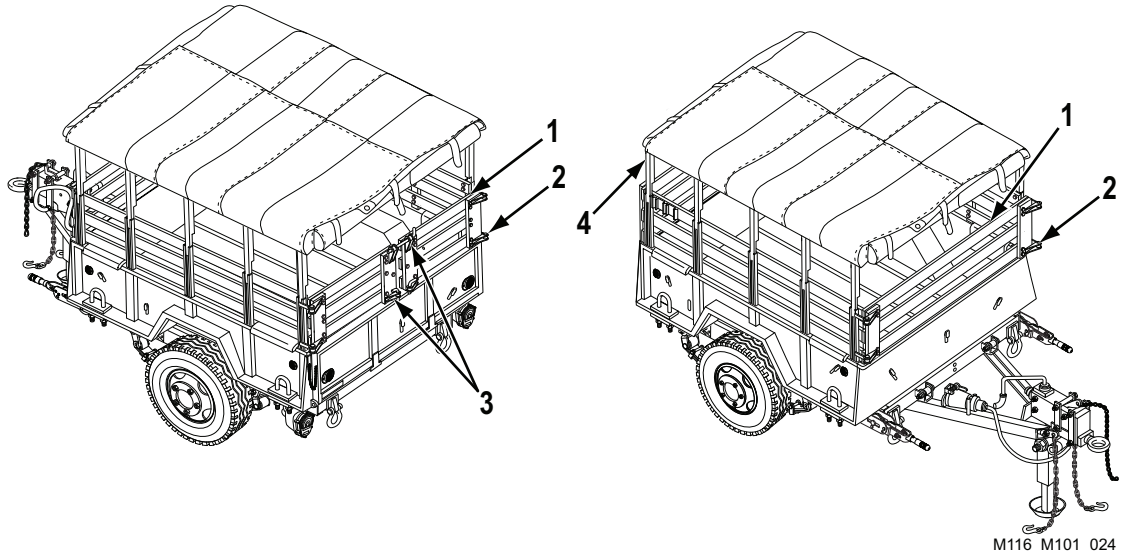

Figure 3. Tailgate, Front Rack, and Bow Assembly Check.

Table 1. Operator Preventive Maintenance Checks and Services (PMCS) for the M101 and M116 Series Trailers - Continued.

ITEM NO.	INTERVAL	ITEM TO BE CHECKED OR SERVICED	PROCEDURE	EQUIPMENT NOT READY/ AVAILABLE IF:
9	Before	Side Rack Assembly (M101A2 and M101A3)	a. Check for missing or unserviceable bow clips (Figure 4, Item 1). b. Check for unserviceable stakes (Figure 4, Item 4). c. Check for unserviceable slats (Figure 4, Item 3). d. Check for missing or unserviceable strap hinge assemblies (Figure 4, Item 2).	

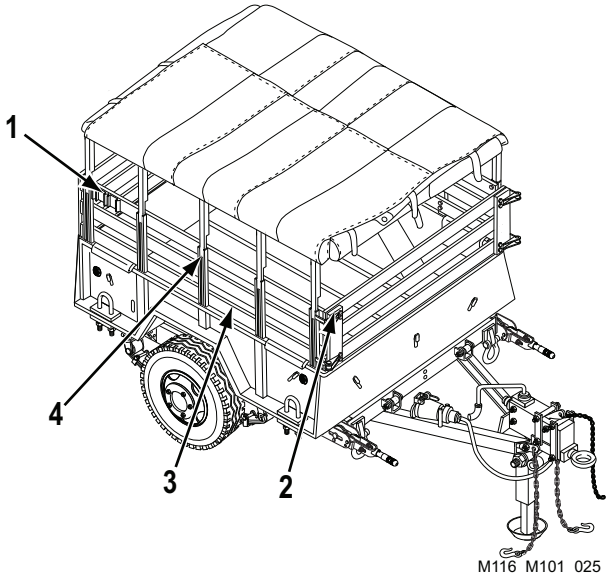

Figure 4. Slide Rack Assembly Check.

Table 1. Operator Preventive Maintenance Checks and Services (PMCS) for the M101 and M116 Series Trailers - Continued.

ITEM NO.	INTERVAL	ITEM TO BE CHECKED OR SERVICED	PROCEDURE	EQUIPMENT NOT READY/ AVAILABLE IF:
10	Before	Front Support Leg	With trailer coupled to prime mover, check front support leg (Figure 5, Item 1) for ease of operation.	Front support leg will not secure in stowed position or will not support trailer.
			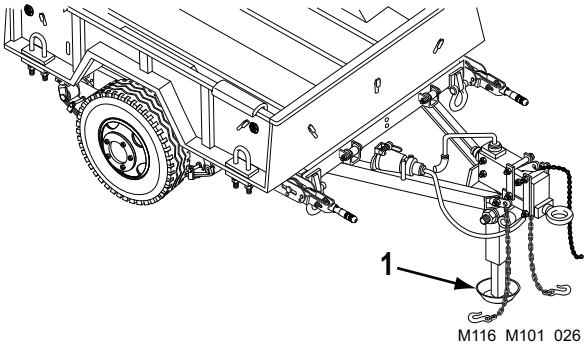 *Figure 5. Front Support Leg Check.*	
11	Before	Stoplight Taillights	**NOTE** An assistant is required while checking stoplight taillights. a. Connect intervehicular cable to prime mover (WP 0005). b. Operate prime mover light switch through all settings and check stoplight taillights (WP 0002).	
12	During	Trailer Operation	a. Be alert for any unusual noise while towing trailer. Stop and investigate any unusual noises. b. Make sure trailer is tracking correctly behind prime mover, with no side pull.	
13	Weekly	Wheel Assembly	Check for proper tire pressure when tires are cool (WP 0002).	One tire is flat, missing, or unserviceable.

Table 1. Operator Preventive Maintenance Checks and Services (PMCS) for the M101 and M116 Series Trailers - Continued.

ITEM NO.	INTERVAL	ITEM TO BE CHECKED OR SERVICED	PROCEDURE	EQUIPMENT NOT READY/ AVAILABLE IF:
14	Weekly	Reflectors	On cargo trailers, check for damage and presence of reflectors (WP 0002).	
15	Monthly	Frame	When trailer is loaded, inspect entire chassis frame (Figure 6, Item 1) for damage, cracks, and broken welds.	Frame is broken or cracked.

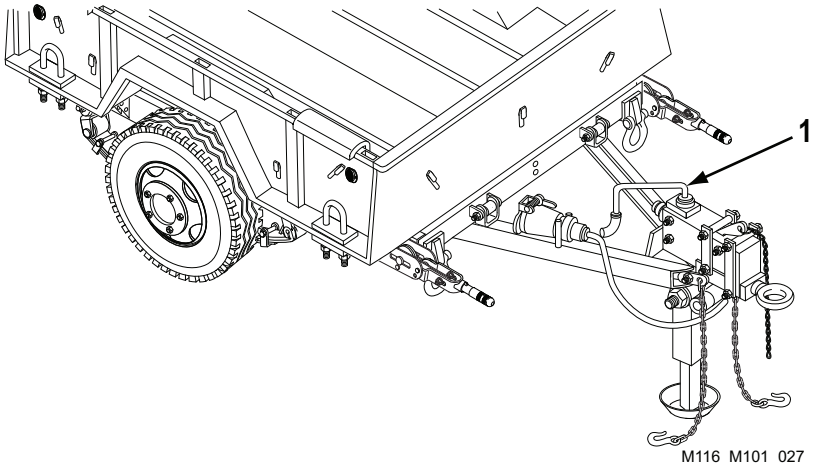

Figure 6. Chassis Frame Inspection.

END OF TASK

END OF WORK PACKAGE

FIELD MAINTENANCE
FIELD PREVENTIVE MAINTENANCE CHECKS AND SERVICES (PMCS) PROCEDURES

INITIAL SETUP:

References
- TM 9-2610-200-14
- WP 0002
- WP 0037
- WP 0045
- WP 0046
- WP 0047

References (cont.)
- WP 0048
- WP 0054
- WP 0055
- WP 0072
- WP 0073
- WP 0077

Table 1. Field Preventive Maintenance Checks and Services (PMCS) for the M101 and M116 Series Trailers.

ITEM NO.	INTERVAL	ITEM TO BE CHECKED OR SERVICED	PROCEDURE	EQUIPMENT NOT READY/ AVAILABLE IF:
			NOTE Perform Operator PMCS prior to or along with Field PMCS.	
1	Semiannual	Composite Stoplight-Taillights	Check for broken or cracked lenses or damaged composite stoplight taillights and replace as required (WP 0037).	
2	Semiannual	Intervehicular Cable	Check for cuts, breaks, frayed wires, or damaged plug. Replace defective components as required.	
3	Semiannual	Hydraulic Brake System	Service master cylinder (WP 0077).	
4	Semiannual	Drawbar Coupler	Check for security of mounting and proper mounting hardware. Make sure drawbar coupler is not excessively worn at the end.	Loose or missing nuts and bolts.
5	Semiannual	Safety Chains	Check for missing or broken safety chains.	Loose or missing chains.
6	Semiannual	Front Support Leg	Inspect brackets and front support leg for bent or broken parts.	
7	Semiannual	Reflectors	Check for cracked or broken reflectors and replace as required (WP 0072).	
8	Annual	Axle	a. Inspect for damaged axle tube. b. Inspect for loose or missing U-bolts or self-locking nuts.	
9	Annual	Service Brake system	a. Perform service brake maintenance (WP 0045) or (WP 0046). b. Adjust service brakes (WP 0047) or (WP 0048).	

Table 1. Field Preventive Maintenance Checks and Services (PMCS) for the M101 and M116 Series Trailers - Continued.

ITEM NO.	INTERVAL	ITEM TO BE CHECKED OR SERVICED	PROCEDURE	EQUIPMENT NOT READY/ AVAILABLE IF:
10	Annual	Hydraulic Brake System	a. Inspect wheel cylinders for leaks. b. Check hydraulic brake actuator assembly for damage and security of mounting. c. Check hydraulic brake lines and fittings for dents, cracks, loose connections, and leaks.	Any leaks are found. Any leaks are found.
11	Annual	Wheel Assemblies	a. Inspect tires for wear and damage. Check tread depth TM 9-2610-200-14. b. Check tire pressure when tires are cool (WP 0002). **NOTE** • Turn lug nuts clockwise to tighten and counterclockwise to loosen. • If vehicle is equipped with runflat tires, torque lug nuts between 112 – 138 lb-ft (152 – 187 N•m). For other tire configurations, torque lug nuts between 110 – 120 lb-ft (149 – 163 N•m). c. Check wheels for damage and lug nuts for tightness and presence.	
12	Annual	Wheel Bearings	Replace wheel bearings (WP 0054) or (WP 0055).	
13	Annual	Frame	Inspect frame for cracks, bent members, and broken welds.	
14	Annual	Suspension Assemblies	a. Inspect shackles, bushings, shackle pins, and spring eyes for damage or broken parts. b. Inspect spring assemblies for cracked or shifted leaves. c. Inspect spring hangers for obvious damage. d. Inspect shock absorbers for leaking, damage, and security of mounting.	
15	Annual	Data Plates	Make sure data plates can be read and are firmly attached. Replace if damaged or disfigured (WP 0073).	
16	Annual	Road Test	Perform road test. Give special attention to items that were repaired or adjusted. Be alert for unusual or excessive noises that may indicate damage, looseness, defects, or deficient lubrication in attachments or wheels.	

END OF TASK

END OF WORK PACKAGE

CHAPTER 6

OPERATOR MAINTENANCE INSTRUCTIONS

OPERATOR MAINTENANCE
WHEEL ASSEMBLY REPLACEMENT

INITIAL SETUP:

Equipment Condition
Handbrakes applied (WP 0005)

WARNING

Trailer must be supported by blocking or support stands placed under axle or frame throughout maintenance procedure. Failure to comply may result in death or injury to personnel. Seek medical attention in the event of an injury.

NOTE

- This procedure shows replacement of the M116A2 wheel assembly.
- Lug wrench and lifting device needed will come from prime mover.

REMOVAL

1. Chock wheel assembly (Figure 1, Item 1) opposite side being removed.

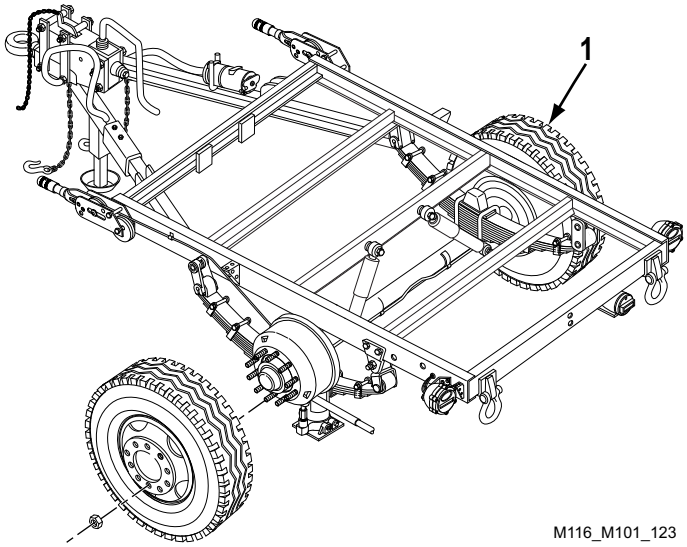

Figure 1. Wheel Assembly Removal.

REMOVAL - Continued

2. Loosen eight nuts (Figure 2, Item 4) on wheel assembly (Figure 2, Item 1).
3. Raise and support axle (Figure 2, Item 2) on side where wheel assembly (Figure 2, Item 1) is being removed.
4. Remove eight nuts (Figure 2, Item 4) from wheel assembly (Figure 2, Item 1). Remove wheel assembly (Figure 2, Item 1) from shoulder bolts (Figure 2, Item 3).

END OF TASK

INSTALLATION

1. Install wheel assembly (Figure 2, Item 1) on shoulder bolts (Figure 2, Item 3).
2. Install eight nuts (Figure 2, Item 4) on wheel assembly (Figure 2, Item 1) and tighten alternately and evenly.
3. Remove support from axle (Figure 2, Item 2) and lower wheel assembly (Figure 2, Item 1) to the ground.

NOTE

When mission permits, have Field Maintenance torque eight nuts alternately and evenly between 110 – 120 Ib-ft (149 – 163 N•m).

4. Recheck lug nut tightness alternately and evenly.

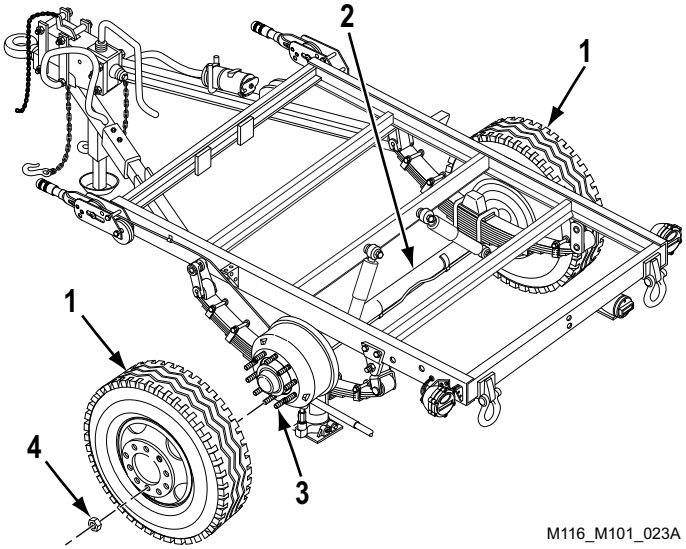

Figure 2. Wheel Assembly Replacement.

END OF TASK

END OF WORK PACKAGE

CHAPTER 7

FIELD MAINTENANCE INSTRUCTIONS

FIELD MAINTENANCE
SERVICE UPON RECEIPT

INITIAL SETUP:

Materials/Parts
Degreasing solvent
(WP 0114, Table 1, Item 9)
Rag, wiping (WP 0114, Table 1, Item 24)

References
DA Form 2407
DD Form 1397

References (cont.)
DD Form 314
DA PAM 750-8
WP 0009
WP 0032
WP 0033
WP 0077

GENERAL

When a new, used, or reconditioned trailer is received, determine whether it has been properly prepared for service and is capable of performing its mission by following the inspection instructions and the servicing instructions.

INSPECTION INSTRUCTIONS

1. Refer to DD Form 1397, Processing and Deprocessing Record for Shipment, Storage and Issue of Vehicles and Spare Engines for procedures on unpacking the trailer.
2. Remove all straps, plywood, tape, seals, and wrappings.

INSPECTION INSTRUCTIONS - Continued

WARNING


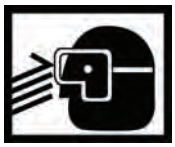

- Solvent cleaning compound MIL-PRF-680 may be irritating to the eyes and skin. Use protective gloves and goggles. First aid for skin contact: remove contaminated clothing. Wash skin thoroughly with soap and water. First aid for eye contact: flush with water until irritation subsides. If symptoms persist, seek medical attention. Failure to comply may result in death or injury to personnel. Seek medical attention in the event of an injury.
- Use solvent cleaning compound MIL-PRF-680 in a well ventilated area. Use respirator as needed. Accidental ingestion can cause irritation of digestive tract and respiratory tract. May cause lung and central nervous system damage. Can be fatal if swallowed. Inhalation of high/massive concentrations can cause coma or be fatal. First aid for ingestion: do not induce vomiting. Seek immediate medical attention. First aid for inhalation: move to fresh air. If not breathing, provide artificial respiration. If symptoms persist, seek medical attention. Failure to comply may result in death or injury to personnel. Seek medical attention in the event of an injury.
- MIL-PRF-680 solvent is combustible; DO NOT use or store near heat, sparks, flame, or other ignition sources. Use mechanical ventilation whenever product is used in a confined space, heated above ambient temperatures, or agitated. Keep container sealed when not in use. Failure to comply may result in death or injury to personnel. Seek medical attention in the event of an injury.
- Improper cleaning methods and use of unauthorized cleaning liquids or solvents can injure personnel and damage equipment. Failure to comply may result in death or injury to personnel. Seek medical attention in the event of an injury.
- Rags saturated with solvent cleaning compound must be disposed of IAW authorized facility procedures. Failure to comply may result in death or injury to personnel. Seek medical attention in the event of an injury.
- Solvent cleaning compound MIL-PRF-680 is toxic and flammable. Always wear protective goggles and gloves, and use only in a well-ventilated area. Avoid contact with skin, eyes, and clothes, and DO NOT breathe vapors. DO NOT use near open flame or excessive heat. Failure to comply may result in death or injury to personnel. Seek medical attention in the event of an injury.

3. Remove rust preventive compound from coated exterior parts of the trailer using cleaning solvent and a soft cloth rag.
4. Inspect the trailer for damage incurred during shipment. Check also to see if the equipment has been modified.
5. Check the equipment against the packing list to see if shipment is complete. Report any discrepancies in accordance with instructions in DA PAM 750-8, The Army Maintenance Management System (TAMMS) Users Manual.

END OF TASK

SERVICING INSTRUCTIONS

1. Perform all Operator and Field Preventive Maintenance Checks and Services (PMCS) listed in (WP 0032) and (WP 0033). Schedule the next Field PMCS on DD Form 314, Preventive Maintenance Schedule and Record.
2. Lubricate all lubrication points regardless of interval (WP 0077).
3. If any system of the trailer does not operate properly, refer to the troubleshooting index (WP 0009).
4. Perform a break-in road test of 25 miles (40 km) at a maximum speed of 50 miles per hour (80 kph).
5. Report all problems on DA Form 2407, Maintenance Request.

END OF TASK

END OF WORK PACKAGE

FIELD MAINTENANCE
GENERAL MAINTENANCE INSTRUCTIONS

INITIAL SETUP:

Materials/Parts
- Brush (WP 0114, Table 1, Item 4)
- Brush, scrub (WP 0114, Table 1, Item 5)
- Cloth, abrasive (WP 0114, Table 1, Item 6)
- Detergent, general purpose (WP 0114, Table 1, Item 8)
- Degreasing solvent (WP 0114, Table 1, Item 9)
- Lubricating oil, engine (WP 0114, Table 1, Item 21)

Materials/Parts (cont.)
- Rag, wiping (WP 0114, Table 1, Item 24)
- Tag, marker (WP 0114, Table 1, Item 27)

References
- FM 20-3
- TB 43-0209
- TM 9-214
- TM 43-0139
- WP 0080

GENERAL

These general maintenance instructions contain general shop practices and specific procedures you must be familiar with to properly maintain your M101 and M116 Series trailers. You should read and understand these practices and procedures before performing any maintenance task.

Before beginning a task find out how much repair, modification, or replacement is needed to fix the equipment. Sometimes the reason for equipment failure can be seen right away and complete teardown is not necessary. Disassemble equipment only as far as necessary to repair or replace damaged parts.

The following Initial Setup information applies to all procedures:
- Resources are not listed unless they apply to the procedure.
- Personnel Required is listed only if more than one technician is required to complete the task.

All tags and forms attached to equipment must be checked to learn the reason for removal of equipment from service. Modification work orders and technical bulletins must also be checked for equipment changes and updates.

In some cases, a part may be damaged by removal. If the part appears to be good and other parts behind it are not defective, leave it on and continue with the procedure. Here are a few simple rules:
- Do not remove dowel pins or studs unless loose, bent, broken, or otherwise damaged.
- Do not remove bearings or bushings unless damaged. If you need to remove them to access parts, carefully pull out bearings and bushings.
- Replace all gaskets, lockwashers, self-locking nuts, seals, cotter pins, preformed packing, and other locking hardware.

WORK SAFETY

Before beginning a procedure, think about the safety risks and hazards to yourself and others. Wear protective gear, such as a shield, safety goggles or lenses, safety shoes, rubber apron, and gloves.

Observe all WARNINGs and CAUTIONs.

Clean up spilled fluids immediately, to avoid slipping.

When lifting a heavy part, have someone help you. Make sure that lifting/jacking equipment is working properly, meets the weight requirement of the part being lifted, and is securely fastened to the part.

Always use power tools carefully.

All maintenance should be performed with:

- Trailer parking brake engaged;
- Rear stabilizer extended as required;
- Prime mover in neutral with parking brake engaged, if attached; and
- Prime mover engine stopped, if attached.

CLEANING INSTRUCTIONS

WARNING


Improper cleaning methods and the use of unauthorized cleaning liquids or solvents can injure personnel and damage equipment. Failure to comply may result in death or injury to personnel. Seek medical attention in the event of an injury.

General.

Cleaning instructions will be the same for the majority of parts and components that make up the trailer. The following applies to all cleaning operations:

- Clean all parts before inspection, after repair, and before assembly.
- Keep hands free of grease, which can collect dust, dirt, and grit.
- After cleaning, cover or wrap all parts to protect them from dust and dirt. Parts that are subject to rust should be lightly oiled.

Steam Cleaning.

WARNING


Avoid contact with live steam, which can burn skin, cause blindness, and cause other serious injury. Be sure to wear protective apron, gloves, and safety goggles around live steam. Failure to comply may result in death or injury to personnel. Seek medical attention in the event of an injury.

Before steam cleaning trailer, protect all electrical components that could be damaged by steam or moisture.

Place disassembled parts in a suitable container to steam-clean. Parts that are subject to rust should be dried and lightly oiled after cleaning.

Castings, Forgings, and Machined Metal Parts.

WARNING


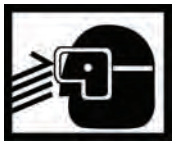

- Solvent cleaning compound MIL-PRF-680 may be irritating to the eyes and skin. Use protective gloves and goggles. First aid for skin contact: remove contaminated clothing. Wash skin thoroughly with soap and water. First aid for eye contact: flush with water until irritation subsides. If symptoms persist, seek medical attention. Failure to comply may result in death or injury to personnel. Seek medical attention in the event of an injury.
- Use solvent cleaning compound MIL-PRF-680 in a well ventilated area. Use respirator as needed. Accidental ingestion can cause irritation of digestive tract and respiratory tract. May cause lung and central nervous system damage. Can be fatal if swallowed. Inhalation of high/massive concentrations can cause coma or be fatal. First aid for ingestion: do not induce vomiting. Seek immediate medical attention. First aid for inhalation: move to fresh air. If not breathing, provide artificial respiration. If symptoms persist, seek medical attention. Failure to comply may result in death or injury to personnel. Seek medical attention in the event of an injury.
- MIL-PRF-680 solvent is combustible; DO NOT use or store near heat, sparks, flame, or other ignition sources. Use mechanical ventilation whenever product is used in a confined space, heated above ambient temperatures, or agitated. Keep container sealed when not in use. Failure to comply may result in death or injury to personnel. Seek medical attention in the event of an injury.
- Improper cleaning methods and use of unauthorized cleaning liquids or solvents can injure personnel and damage equipment. Failure to comply may result in death or injury to personnel. Seek medical attention in the event of an injury.
- Rags saturated with solvent cleaning compound must be disposed of IAW authorized facility procedures. Failure to comply may result in death or injury to personnel. Seek medical attention in the event of an injury.
- Solvent cleaning compound MIL-PRF-680 is toxic and flammable. Always wear protective goggles and gloves, and use only in a well-ventilated area. Avoid contact with skin, eyes, and clothes, and DO NOT breathe vapors. DO NOT use near open flame or excessive heat. Failure to comply may result in death or injury to personnel. Seek medical attention in the event of an injury.

Clean inner and outer surfaces with cleaning solvent.

Remove grease and accumulated deposits with a scrub brush.

WARNING

Compressed air used for cleaning or drying purposes, or for clearing restrictions, should never exceed 30 psi (207 kPa). Wear protective clothing (goggles/shield, gloves, etc.) and use caution to avoid injury to personnel. Failure to comply may result in death or injury to personnel. Seek medical attention in the event of an injury.

Clear out all threaded holes with compressed air to remove dirt and cleaning fluids.

CAUTION

DO NOT wash oil seals, electrical cables, and flexible hoses with cleaning solvent or mineral spirits. Serious damage or destruction of material will result. Failure to comply may result in damage to, or destruction of, equipment or mission.

Oil Seals, Electrical Cables, and Flexible Hoses.

Wash electrical cables and flexible hoses with a solution of detergent and water and wipe dry.

Bearings.

Clean bearings in accordance with TM 9-214.

INSPECTION INSTRUCTIONS

NOTE

All damaged areas should be marked for repair or replacement.

All components and parts must be carefully checked to determine if they are serviceable, can be repaired, or must be scrapped.

Inspect drilled and tapped (threaded) holes for the following:
- In or around holes-wear, distortion (stretching), cracks, and any other damage.
- Threaded areas-wear, distortion (stretching), and evidence of cross-threading.

Inspect metal lines, flexible lines (hoses), and metal fittings and connectors for the following:
- Metal lines-sharp kinks, cracks, bad bends, and dents.
- Flexible lines-fraying, evidence of leakage, and loose metal fittings or connectors.
- Metal fittings and connectors-thread damage and worn or rounded hex heads.

Inspect castings, forgings, and machined metal parts for the following:
- Machined surfaces-nicks, burrs, raised metal, wear, and other damage.
- Inner and outer surfaces-breaks and cracks.

Inspect fittings and connectors for leaks by coating fittings and connectors with solution of detergent and water. No leakage is permissible.

Inspect bearings in accordance with TM 9-214.

TAGGING PARTS

Use marker tags to identify all electrical wires, hydraulic lines, and any other parts that may be hard to identify or replace later. Fasten a tag to the part during removal by wrapping a wire fastener around or through the part and twisting the ends together. Position tags to be out of the way during cleaning, inspection, and repair. Mark tags with a pencil, pen, or marker.

Whenever possible, identify each electrical wire with the number of the terminal or wire to which it connects. If no markings can be found, tag both wires or wire and terminal using the same identifying mark for both. If you cannot tag a wire because it must fit through a small hole or you cannot reach it, write down a description of the wire and the point at which it connects or draw a simple diagram on paper. Be sure to write down enough information so you will be able to properly connect wires (or wire and terminal) during assembly. If you need to identify a loose wire, look for identifying numbers near the end of the wire, stamped on a permanent metal tag. Compare this number to the wire numbers on the wiring diagram (WP 0080).

Identify and tag other parts as required by name and location.

Remove all tags when finished.

PRESERVATION OF PARTS

Unpainted metal parts that will not be installed immediately after cleaning should be covered with a thin coat of lubricating oil.

PAINTING

On areas where paint has been removed, paint in accordance with the procedures outlined in TM 43-0139 and TB 43-0209. For camouflage painting instructions, refer to FM 20-3.

ELECTRICAL GROUND POINTS

Many electrical problems are the result of poor ground connections. You can ensure that ground connections are good by performing the following steps:

- Remove hardware connecting ground cable terminal lug to ground point.

WARNING

- Solvent cleaning compound MIL-PRF-680 may be irritating to the eyes and skin. Use protective gloves and goggles. First aid for skin contact: remove contaminated clothing. Wash skin thoroughly with soap and water. First aid for eye contact: flush with water until irritation subsides. If symptoms persist, seek medical attention. Failure to comply may result in death or injury to personnel. Seek medical attention in the event of an injury.
- Use solvent cleaning compound MIL-PRF-680 in a well ventilated area. Use respirator as needed. Accidental ingestion can cause irritation of digestive tract and respiratory tract. May cause lung and central nervous system damage. Can be fatal if swallowed. Inhalation of high/massive concentrations can cause coma or be fatal. First aid for ingestion: do not induce vomiting. Seek immediate medical attention. First aid for inhalation: move to fresh air. If not breathing, provide artificial respiration. If symptoms persist, seek medical attention. Failure to comply may result in death or injury to personnel. Seek medical attention in the event of an injury.
- MIL-PRF-680 solvent is combustible; DO NOT use or store near heat, sparks, flame, or other ignition sources. Use mechanical ventilation whenever product is used in a confined space, heated above ambient temperatures, or agitated. Keep container sealed when not in use. Failure to comply may result in death or injury to personnel. Seek medical attention in the event of an injury.
- Improper cleaning methods and use of unauthorized cleaning liquids or solvents can injure personnel and damage equipment. Failure to comply may result in death or injury to personnel. Seek medical attention in the event of an injury.
- Rags saturated with solvent cleaning compound must be disposed of IAW authorized facility procedures. Failure to comply may result in death or injury to personnel. Seek medical attention in the event of an injury.
- Solvent cleaning compound MIL-PRF-680 is toxic and flammable. Always wear protective goggles and gloves, and use only in a well-ventilated area. Avoid contact with skin, eyes, and clothes, and DO NOT breathe vapors. DO NOT use near open flame or excessive heat. Failure to comply may result in death or injury to personnel. Seek medical attention in the event of an injury.

- Clean mounting hardware, mounting surfaces, ground terminal lug, and ground point with cleaning solvent and scrub brush.
- Remove any rust with wire brush and abrasive cloth.
- Look for cracks, loose terminal lugs, and stripped threads. Replace any defective parts.
- Install hardware connecting ground cable terminal lug to ground point. Make sure all hardware is tight.

HYDRAULIC BRAKE LINES AND PORTS

To keep dirt from contaminating the hydraulic brake system when removing and installing hydraulic brake lines, perform the following steps:

- Clean fittings and surrounding area before disconnecting lines.
- Cover lines and ports after disconnecting lines to prevent dirt from entering system.
- Make sure new and used parts are clean before connecting.
- Wait to uncover lines and ports until just before connecting lines.

FLUID DISPOSAL

Refer to local procedures for storage and disposal of drained fluids.

END OF WORK PACKAGE

FIELD MAINTENANCE
COMPOSITE STOPLIGHT-TAILLIGHT MAINTENANCE

INITIAL SETUP:

Tools and Special Tools
Tool Kit, General Mechanic's
(WP 0115, Table 1, Item 1)

Equipment Condition
Intervehicular cable disconnected from prime mover (WP 0005)

Materials/Parts
Packing, preformed (WP 0082, Figure 1, Item 3)
Two lockwashers (WP 0082, Figure 1, Item 4)
Tag, marker (as needed)
(WP 0114, Table 1, Item 25)

LAMP/LED REMOVAL

NOTE

Both 12 VDC and 24 VDC lamps are available. If prime mover is a CUCV, 12 VDC lamps should be used.

1. Loosen six captive screws (Figure 1, Item 3), and remove lens (Figure 1, Item 4) from body (Figure 1, Item 7).
2. Inspect preformed packing (Figure 1, Item 2) for damage. If damaged, remove preformed packing (Figure 1, Item 2) and discard.
3. Remove two lamps (Figure 1, Items 5 and 6) from sockets (Figure 1, Item 1) by pushing in and turning counterclockwise.

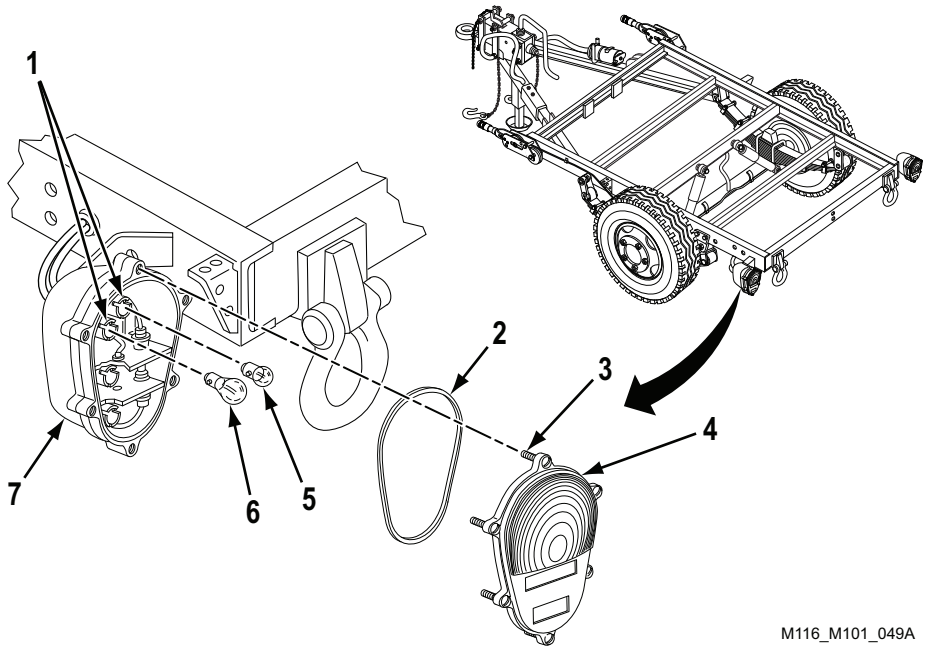

Figure 1. Lamp Removal.

LAMP/LED REMOVAL - Continued

NOTE

- If lamps are present, perform Step 4.
- If LEDs are present, perform Steps 5 and 6.

4. Remove two lamps (Figure 2, Item 8) from sockets (Figure 2, Item 9) by pushing in and turning counterclockwise.
5. Insert screwdriver into slot inside center hole in LED (Figure 2, Item 8). Push in firmly, turn counterclockwise, and remove LED (Figure 2, Item 8) from socket (Figure 2, Item 10).
6. Insert screwdriver into slot on left side of LED (Figure 2, Item 9) and open LED cover, allowing access to inside slot in center hole. Push in firmly in center hole slot, turn counterclockwise slightly, and remove LED (Figure 2, Item 9) from socket (Figure 2, Item 10).

END OF TASK

LAMP/LED INSTALLATION

NOTE

- LEDs can be used to replace lamps that were removed.
- To install LEDs, perform Step 1.
- To install lamps, perform Step 2.

1. Install two LEDs (Figure 2, Items 8 and 9) in sockets (Figure 2, Item 10) by snapping into place by hand.
2. Install two lamps (Figure 2, Item 7) in sockets (Figure 2, Item 10) by pushing in and turning clockwise.
3. Install two lamps (Figure 2, Items 5 and 6) in sockets (Figure 2, Item 1) by pushing in and turning clockwise.
4. If removed, install new preformed packing (Figure 2, Item 2) in lens (Figure 2, Item 4).
5. Install lens (Figure 2, Item 4) on body (Figure 2, Item 11) and tighten six captive screws (Figure 2, Item 3).

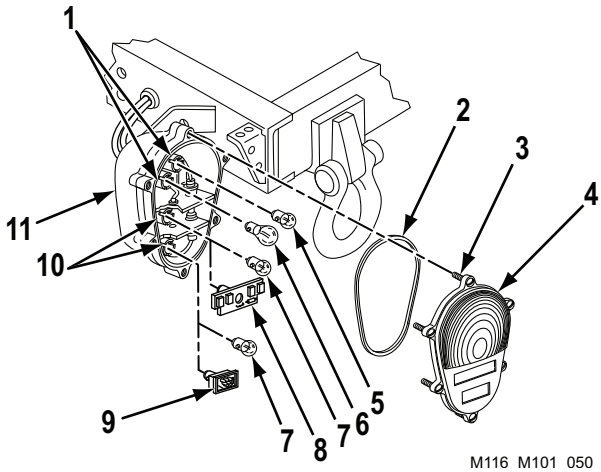

Figure 2. Lamp/LED Replacement.

END OF TASK

COMPOSITE STOPLIGHT-TAILLIGHT REMOVAL

NOTE

If marker bands are missing or illegible, tag wires for installation purposes.

1. Remove four composite stoplight-taillight connectors (Figure 3, Item 3) and chassis wiring harness connectors (Figure 3, Item 4) from clip (Figure 3, Item 2) and disconnect connectors (Figure 3, Items 3 and 4).
2. Remove grommet (Figure 3, Item 1) from hole (Figure 3, Item 13) in frame.
3. Pull four wires (Figure 3, Item 12) of composite stoplight-taillight (Figure 3, Item 7) through hole (Figure 3, Item 13) in frame.
4. Remove two cap screws (Figure 3, Item 11), lockwashers (Figure 3, Item 10), and washers (Figure 3, Item 9) and composite stoplight-taillight (Figure 3, Item 7) from bracket (Figure 3, Item 8). Discard lockwashers (Figure 3, Item 10) and washers (Figure 3, Item 9).
5. If bracket (Figure 3, Item 8) is damaged, remove two self-locking nuts (Figure 3, Item 5) and cap screws (Figure 3, Item 6) and bracket (Figure 3, Item 8) from frame. Discard self-locking nuts (Figure 3, Item 5).

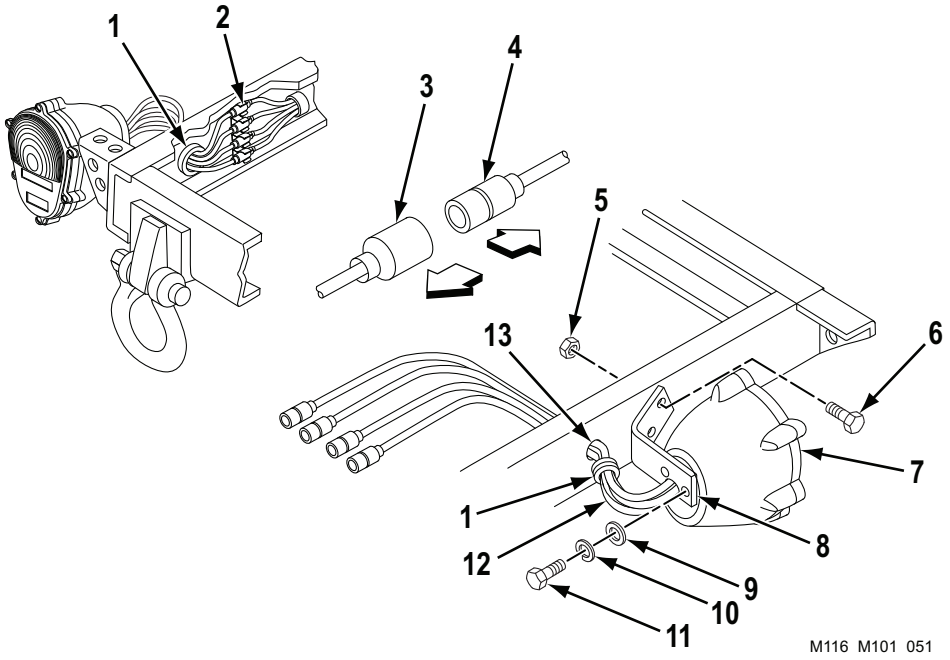

Figure 3. Composite Stoplight-Taillight Removal.

END OF TASK

COMPOSITE STOPLIGHT-TAILLIGHT INSTALLATION

1. If bracket (Figure 4, Item 8) is removed, install bracket (Figure 4, Item 8) on frame with two cap screws (Figure 4, Item 6) and new self-locking nuts (Figure 4, Item 5).
2. Install composite stoplight-taillight (Figure 4, Item 7) on bracket (Figure 4, Item 8) with two new washers (Figure 4, Item 9), new lockwashers (Figure 4, Item 10), and cap screws (Figure 4, Item 11).
3. Feed four wires (Figure 4, Item 12) of composite stoplight-taillight (Figure 4, Item 7) through hole (Figure 4, Item 14) in frame.
4. Position grommet (Figure 4, Item 1) around four wires (Figure 4, Item 12), and install grommet (Figure 4, Item 1) through hole (Figure 4, Item 13) in frame.
5. Connect four composite stoplight-taillight connectors (Figure 4, Item 3) on four chassis wiring harness connectors (Figure 4, Item 4). Place connectors (Figure 4, Items 3 and 4) in clip (Figure 4, Item 2).

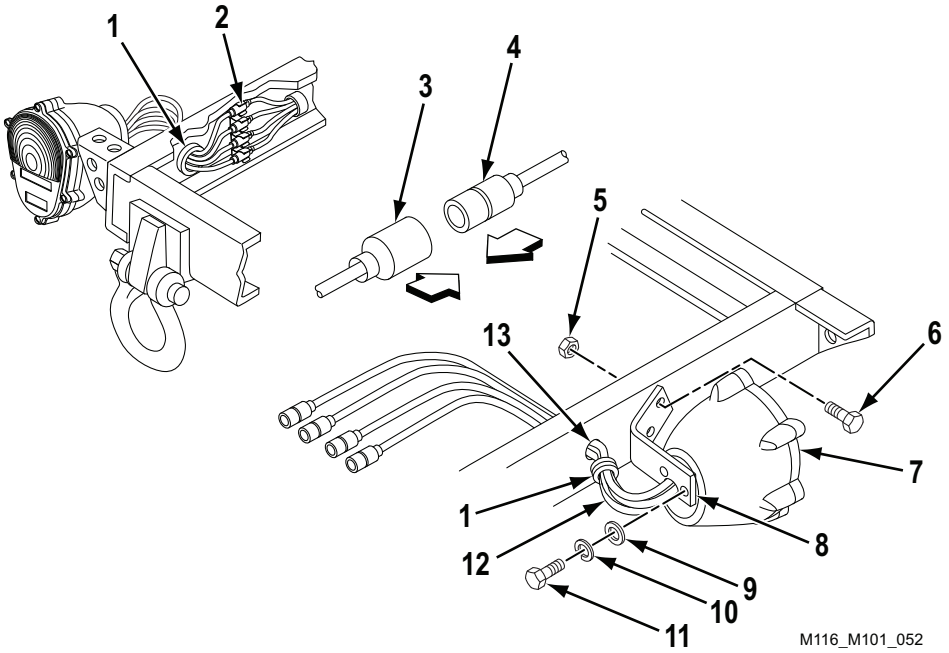

Figure 4. Composite Stoplight-Taillight Installation.

END OF TASK

FOLLOW ON TASK

Connect intervehicular cable to prime mover (WP 0005).

END OF TASK

END OF WORK PACKAGE

FIELD MAINTENANCE
BLACKOUT STOPLIGHT MAINTENANCE (M101A1 AND M116A1)

INITIAL SETUP:

Tools and Special Tools
Tool Kit, General Mechanic's
(WP 0115, Table 1, Item 1)

Materials/Parts
Lockwasher (WP 0082, Figure 1, Item 27)
Gasket (WP 0082, Figure 1, Item 32)
Cloth, abrasive
(WP 0114, Table 1, Item 7)
Detergent, general purpose
(WP 0114, Table 1, Item 8)

Materials/Parts (cont.)
Rag, wiping
(WP 0114, Table 1, Item 24)
Tag, marker (as needed)
(WP 0114, Table 1, Item 27)

References
TM 43-0139

Equipment Condition
Intervehicular cable disconnected from prime mover (WP 0005)

LAMP REPLACEMENT

1. Remove two screws (Figure 1, Item 3), lens retainer (Figure 1, Item 2), and gasket (Figure 1, Item 1). Discard gasket (Figure 1, Item 1).
2. Remove lamp (Figure 1, Item 4) from socket (Figure 1, Item 5) by pushing in and turning counterclockwise.
3. Install lamp (Figure 1, Item 4) in socket (Figure 1, Item 5) by pushing in and turning clockwise.
4. Install new gasket (Figure 1, Item 1), lens retainer (Figure 1, Item 2), and two screws (Figure 1, Item 3).

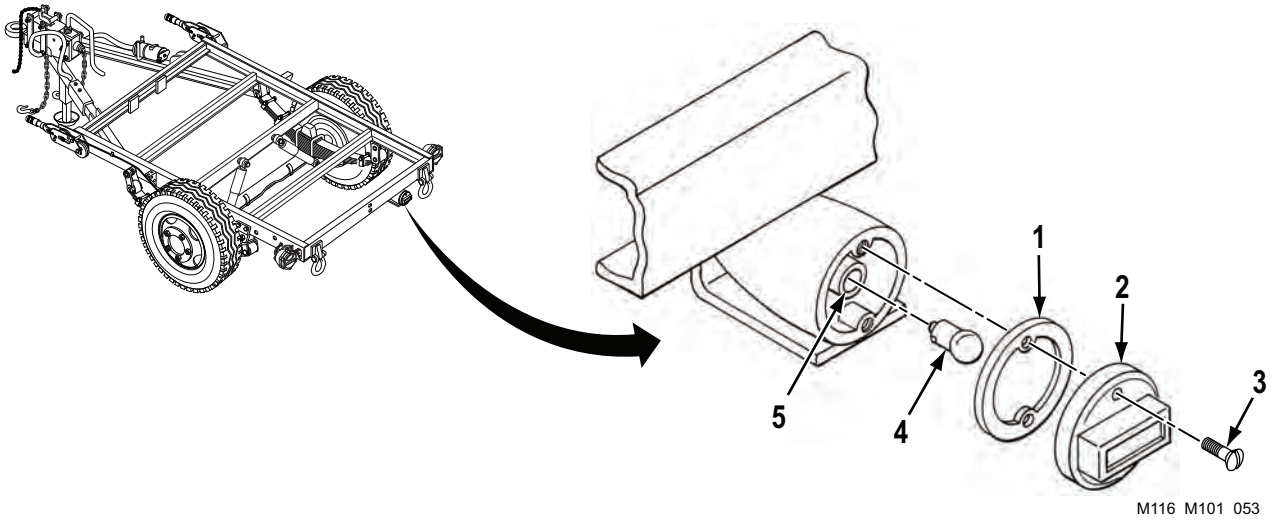

Figure 1. Lamp Replacement.

END OF TASK

BLACKOUT STOPLIGHT REMOVAL

1. Disconnect connector (Figure 2, Item 1) from connector (Figure 2, Item 2) in blackout stoplight (Figure 2, Item 3).
2. Remove bolt (Figure 2, Item 5), lockwasher (Figure 2, Item 4), and blackout stoplight (Figure 2, Item 3). Discard lockwasher (Figure 2, Item 4).

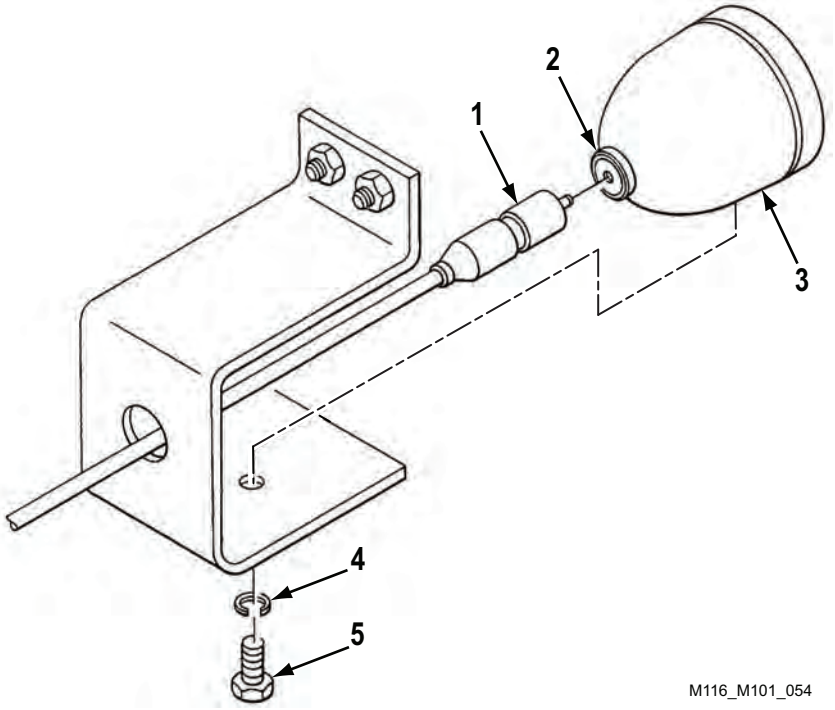

Figure 2. Blackout Stoplight Removal.

END OF TASK

BLACKOUT STOPLIGHT DISASSEMBLY

1. Remove two screws (Figure 3, Item 9), lens retainer (Figure 3, Item 8), and gasket (Figure 3, Item 1). Discard gasket (Figure 3, Item 1).
2. Remove lamp (Figure 3, Item 2) from socket (Figure 3, Item 4) by pushing in and turning counterclockwise.
3. Remove two screws (Figure 3, Item 3), disconnect terminal (Figure 3, Item 5), and remove socket (Figure 3, Item 4) from housing (Figure 3, Item 6).
4. Remove two grommets (Figure 3, Item 7) from housing (Figure 3, Item 6).

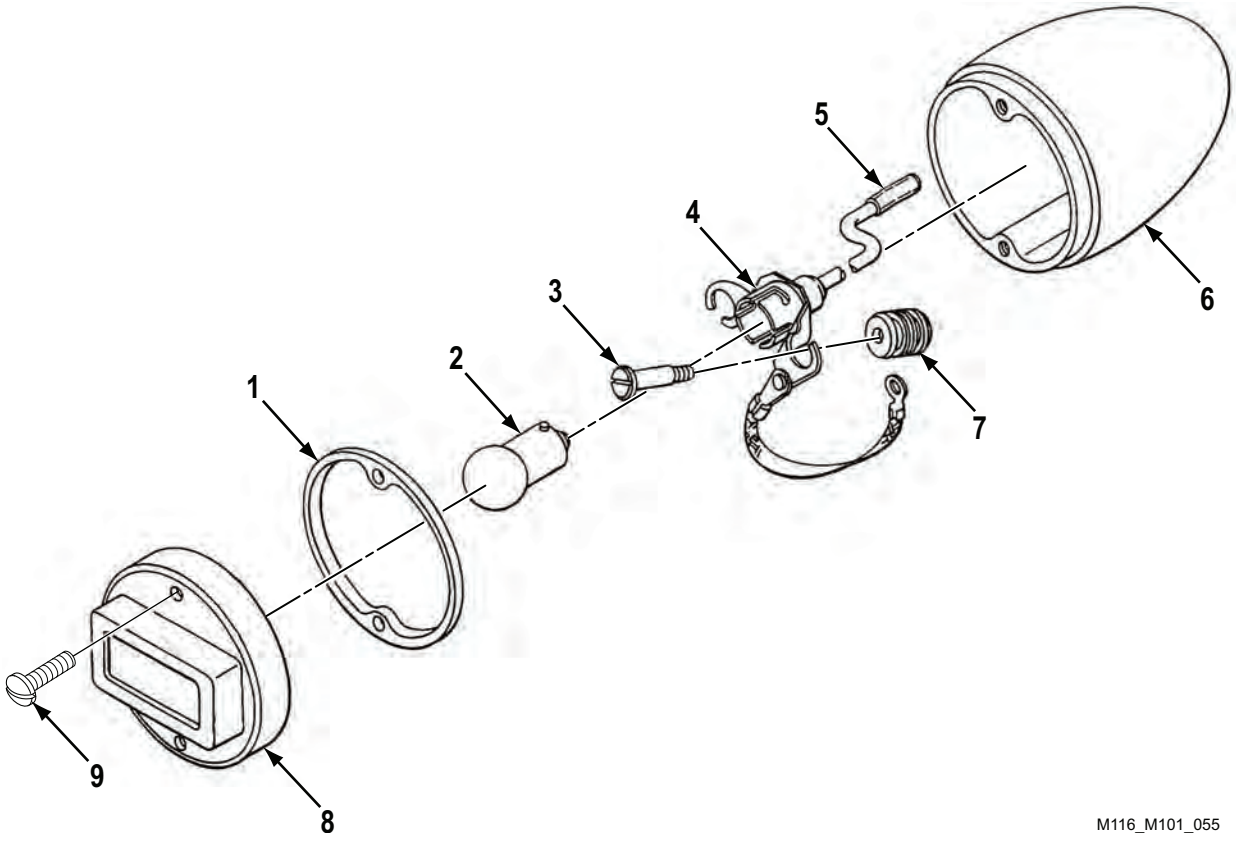

Figure 3. Blackout Stoplight Disassembly.

END OF TASK

CLEANING AND INSPECTION

1. Use detergent and water to clean housing. Dry thoroughly.
2. Use abrasive cloth to remove corrosion.
3. Touch up paint, refer to TM 43-0139.
4. Inspect lens retainer for signs of moisture leakage, cracks, and warpage. Inspect lens for cracks or breaks. Replace lens retainer if lens retainer or lens is damaged.
5. Inspect housing for cracks and dents. Inspect connector for being electrically and mechanically good. Replace housing if damaged.

CLEANING AND INSPECTION - Continued

6. Inspect grommets for damage and deterioration. Replace grommets if damaged.
7. Inspect socket assembly for good electrical and mechanical connections; cracked or deteriorated insulation; broken wires; and corroded lug, terminal, or socket. Replace socket assembly if damaged.

END OF TASK

BLACKOUT STOPLIGHT ASSEMBLY

1. Install two grommets (Figure 4, Item 7) in housing (Figure 4, Item 6).
2. Install socket (Figure 4, Item 4), connect terminal (Figure 4, Item 5), and install two screws (Figure 4, Item 3) in housing (Figure 4, Item 6).
3. Install lamp (Figure 4, Item 2) in socket (Figure 4, Item 4) by pushing in and turning clockwise.
4. Install new gasket (Figure 4, Item 1), lens retainer (Figure 4, Item 8), and two screws (Figure 4, Item 9).

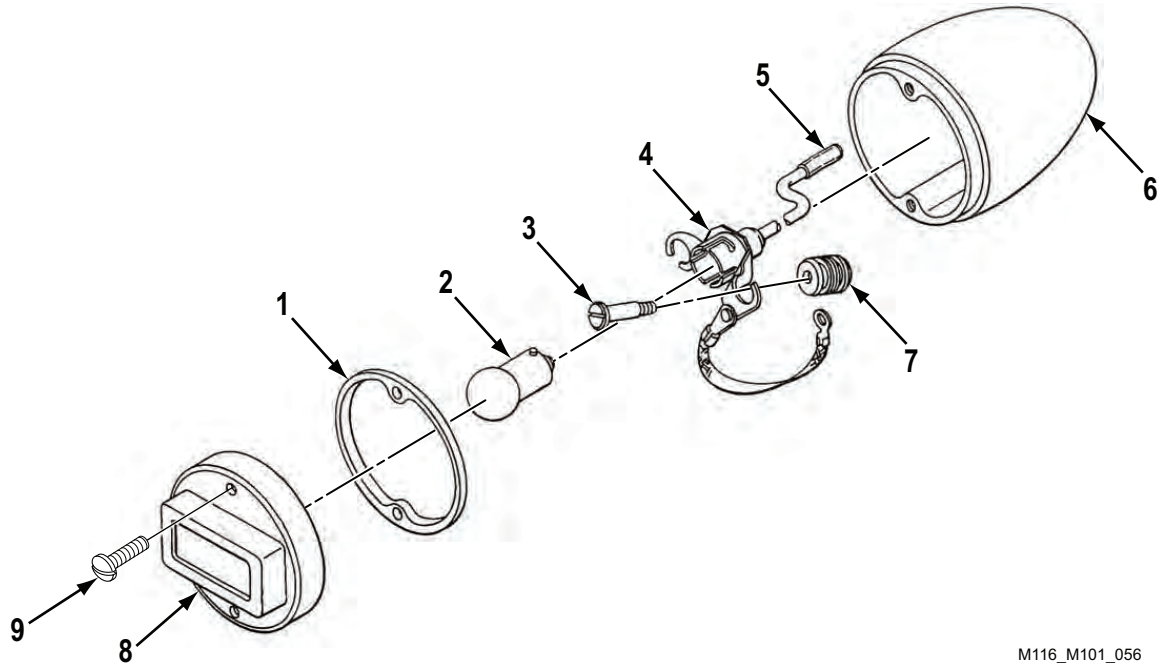

Figure 4. Blackout Stoplight Assembly.

END OF TASK

BLACKOUT STOPLIGHT INSTALLATION

1. Install blackout stoplight (Figure 5, Item 3), new lockwasher (Figure 5, Item 4), and bolt (Figure 5, Item 5).
2. Push connector (Figure 5, Item 1) into connector (Figure 5, Item 2) of blackout stoplight (Figure 5, Item 3) until they lock.

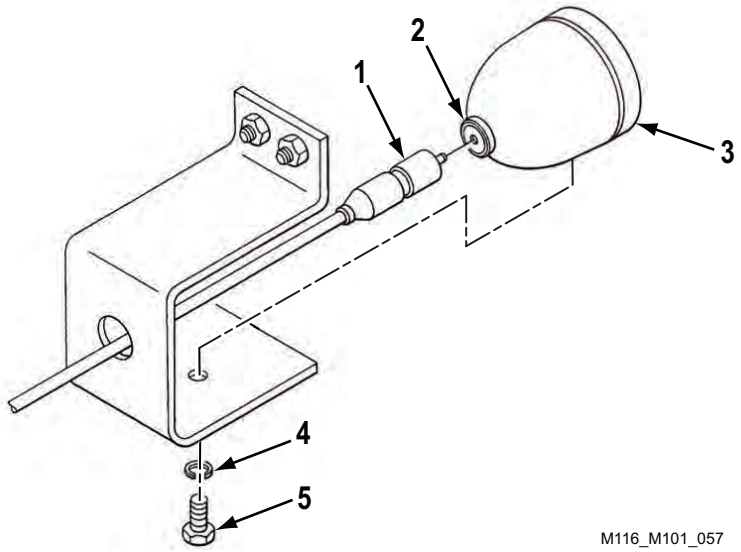

Figure 5. Blackout Stoplight Installation.

END OF TASK

FOLLOW ON TASK

Connect intervehicular cable to prime mover (WP 0005).

END OF TASK

END OF WORK PACKAGE

FIELD MAINTENANCE
STOPLIGHT MAINTENANCE (M101A1 AND M116A1)

INITIAL SETUP:

Tools and Special Tools
Tool Kit, General Mechanic's
(WP 0115, Table 1, Item 1)

Materials/Parts
Two starwashers (WP 0082, Figure 1, Item 15)
Two lockwashers (WP 0082, Figure 1, Item 18)
Packing, preformed (WP 0082, Figure 1, Item 22)
Cloth, abrasive (WP 0114, Table 1, Item 7)
Detergent, general purpose
(WP 0114, Table 1, Item 8)

Materials/Parts (cont.)
Rag, wiping (WP 0114, Table 1, Item 24)
Tag, marker (as needed)
(WP 0114, Table 1, Item 27)

References
TM 43-0139

Equipment Condition
Intervehicular cable disconnected from prime mover (WP 0005)

LAMP REPLACEMENT

NOTE

Screws are held in lens retainer by retainers.

1. Loosen six screws (Figure 1, Item 3) and remove lens retainer (Figure 1, Item 2) and preformed packing (Figure 1, Item 1). Discard preformed packing (Figure 1, Item 1).

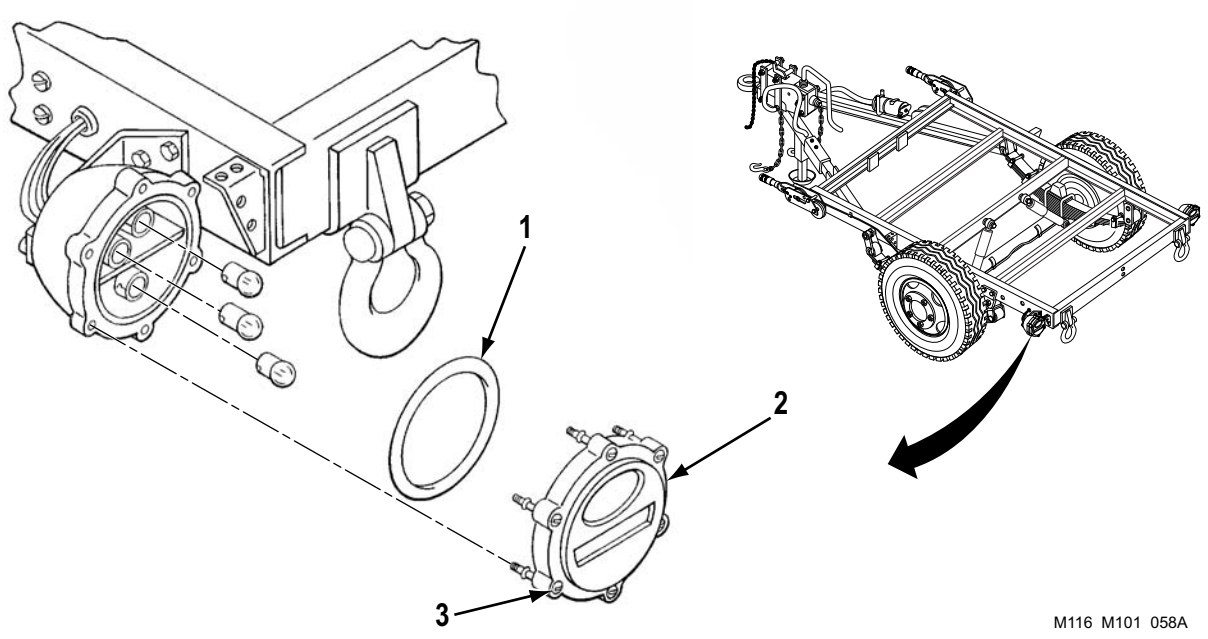

Figure 1. Lens Retainer Removal.

LAMP REPLACEMENT - Continued

2. Remove lamp (Figure 2, Item 2) and two lamps (Figure 2, Item 3) from sockets (Figure 2, Item 1) by pushing in and turning counterclockwise.
3. Install two lamps (Figure 2, Item 3) and lamp (Figure 2, Item 2) in sockets (Figure 2, Item 1) by pushing in and turning clockwise.
4. Install new preformed packing (Figure 2, Item 4) and lens retainer (Figure 2, Item 5) and tighten six screws (Figure 2, Item 6).

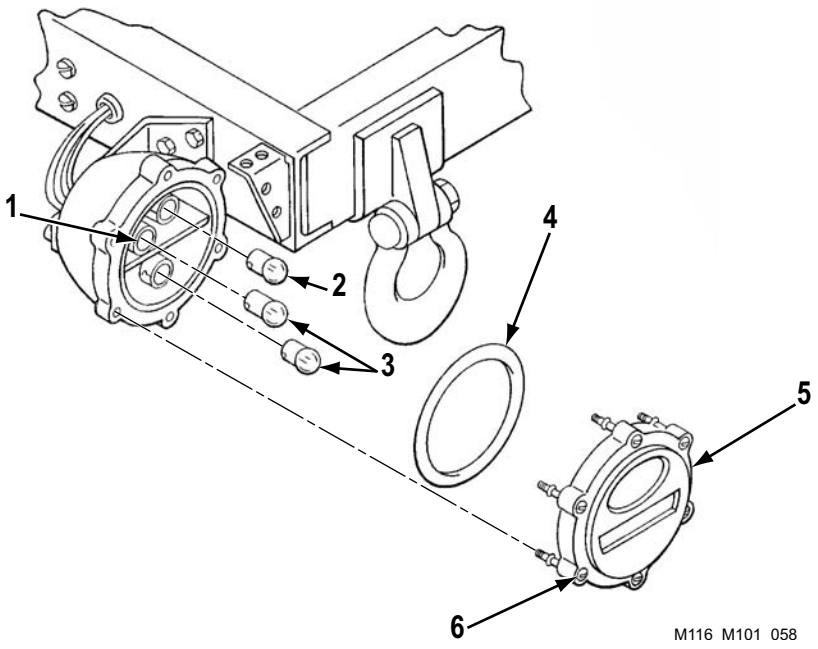

Figure 2. Lamp Replacement.

END OF TASK

STOPLIGHT REMOVAL

1. Pull connectors (Figure 3, Items 2 and 4) from support clip (Figure 3, Item 3).
2. Pull apart connectors (Figure 3, Items 2 and 4).
3. Remove grommet (Figure 3, Item 1) and pull cable (Figure 3, Item 10) through hole in chassis.
4. Remove two cap screws (Figure 3, Item 9), starwashers (Figure 3, Item 8), and stoplight (Figure 3, Item 6) from bracket (Figure 3, Item 7). Discard starwashers (Figure 3, Item 8).

NOTE

Remove bracket only if damaged.

5. Remove two nuts (Figure 3, Item 11), cap screws (Figure 3, Item 5), and bracket (Figure 3, Item 7).

STOPLIGHT REMOVAL - Continued

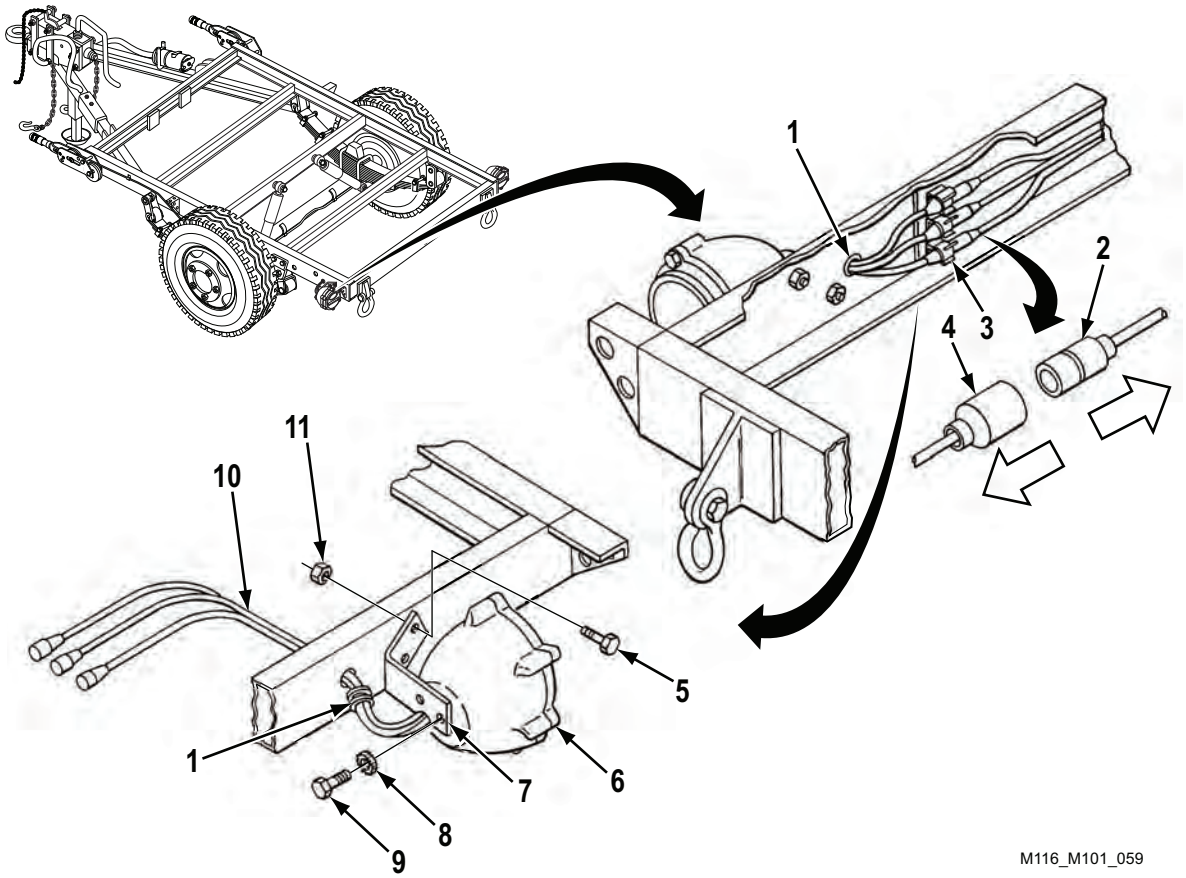

Figure 3. Stoplight Removal.

END OF TASK

STOPLIGHT DISASSEMBLY

1. Push back three shells (Figure 4, Item 2) and remove slotted washers (Figure 4, Item 3) and shells (Figure 4, Item 2) off wire.

NOTE

Screws are held in lens retainer by retainers.

2. Loosen six screws (Figure 4, Item 10), remove lens retainer (Figure 4, Item 11), and preformed packing (Figure 4, Item 9). Discard preformed packing (Figure 4, Item 9).
3. Remove lamp (Figure 4, Item 12) and two lamps (Figure 4, Item 8) from sockets (Figure 4, Item 7) by pushing in and turning counterclockwise.
4. Remove two screws (Figure 4, Item 6) and lockwashers (Figure 4, Item 5). Discard lockwashers (Figure 4, Item 5).
5. Remove three screws (Figure 4, Item 13) and pull socket and wiring assembly (Figure 4, Item 4), retaining plate (Figure 4, Item 14), and grommet (Figure 4, Item 15) out of housing (Figure 4, Item 1).

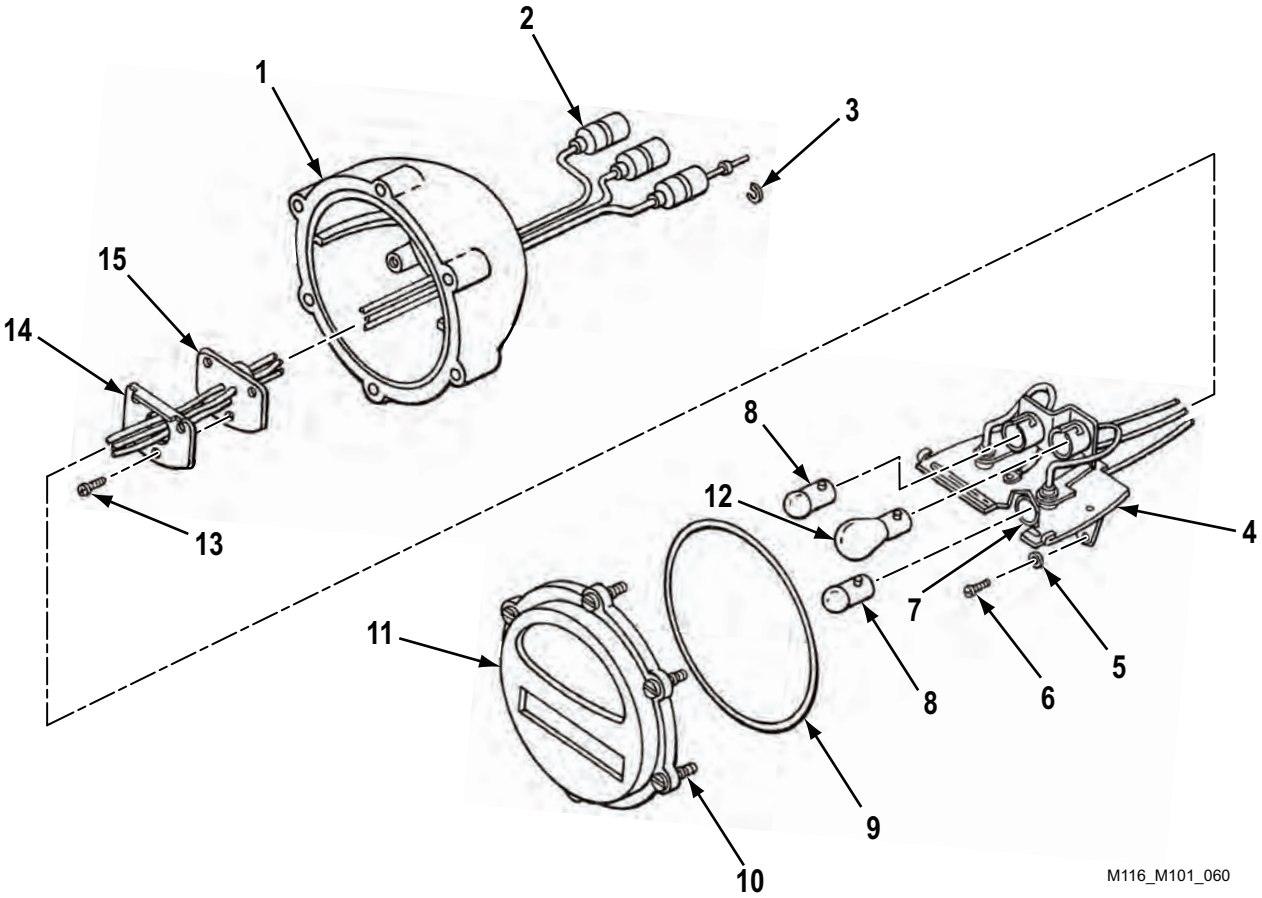

Figure 4. Stoplight Disassembly.

END OF TASK

CLEANING AND INSPECTION

1. Use detergent and water to clean housing. Dry thoroughly.
2. Use abrasive cloth to remove corrosion from lens retainer and housing.
3. Touch up paint, refer to TM 43-0139.
4. Inspect lens retainer for signs of moisture leakage, cracks, warpage, and damaged screwdriver slots or threads on screws, Inspect lenses for cracks or breaks. Replace lens retainer if lens retainer or lenses are damaged.
5. Inspect housing for cracks and dents. Replace housing if damaged.
6. Inspect grommet for damage. Inspect retaining plate for cracks and distortion. Inspect socket and wiring assembly for good electrical and mechanical connections, cracked or bad insulation, broken wires, corroded sockets or terminals, and cracked isolators. Replace socket and wiring assembly, retaining plate, and grommet as an assembly if grommet, retaining plate, or socket and wiring assembly is damaged.

END OF TASK

STOPLIGHT ASSEMBLY

1. Slip wires through hole in housing (Figure 4, Item 1).
2. Position grommet (Figure 4, Item 15), retaining plate (Figure 4, Item 14), and socket and wiring assembly (Figure 4, Item 4) inside housing (Figure 4, Item 1) with double socket at top. Install three screws (Figure 4, Item 13).
3. Install two new lockwashers (Figure 4, Item 5) and screws (Figure 4, Item 6).
4. Install lamp (Figure 4, Item 8) in top-left socket (Figure 4, Item 7) and lamp (Figure 4, Item 8) in bottom socket (Figure 4, Item 7) by pushing in and turning clockwise.
5. Install lamp (Figure 4, Item 12) in top-right socket (Figure 4, Item 7) by pushing in and turning clockwise.
6. Slip three shells (Figure 4, Item 2) over electrical contacts and wires. Install three slotted washers (Figure 4, Item 3) in back of electrical contacts and pull shells (Figure 4, Item 2) over slotted washers (Figure 4, Item 3) and electrical contacts.

END OF TASK

STOPLIGHT INSTALLATION

1. Install bracket (Figure 5, Item 7), two cap screws (Figure 5, Item 5), and nuts (Figure 5, Item 11) to trailer.
2. Install stoplight (Figure 5, Item 6), two new starwashers (Figure 5, Item 8), and cap screws (Figure 5, Item 9) to bracket (Figure 5, Item 7).
3. Push cable (Figure 5, Item 10) through hole in chassis and install grommet (Figure 5, Item 1).
4. Push together connectors (Figure 5, Items 4 and 2) until they lock.
5. Push connectors (Figure 5, Items 4 and 2) into support clip (Figure 5, Item 3).

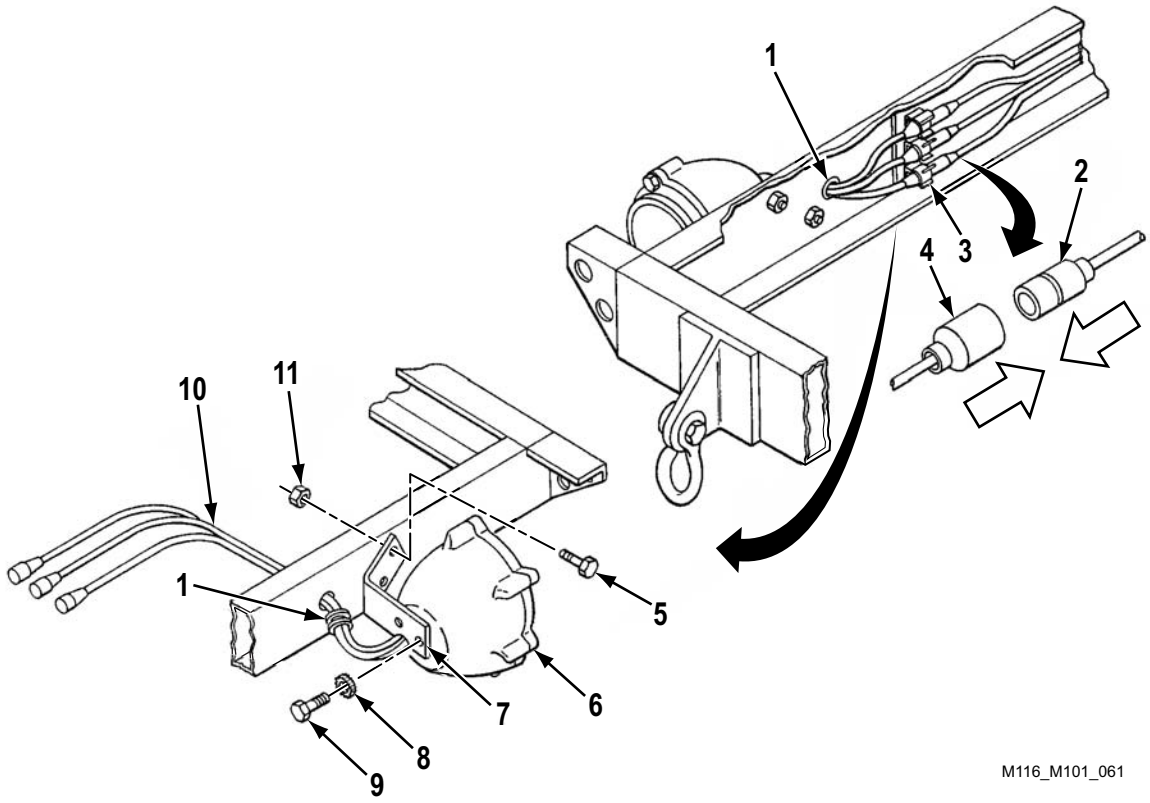

Figure 5. Stoplight Installation.

END OF TASK

FOLLOW ON TASK

Connect intervehicular cable to prime mover (WP 0005).

END OF TASK

END OF WORK PACKAGE

FIELD MAINTENANCE
CHASSIS WIRING HARNESS REPLACEMENT

INITIAL SETUP:

Tools and Special Tools
Tool Kit, General Mechanic's
(WP 0115, Table 1, Item 1)

Materials/Parts
Fifteen lockwashers
(WP 0085, Figure 4, Item 2)
Two electrical tiedown straps

Materials/Parts (cont.)
(WP 0085, Figure 4, Item 5)
Lockwasher (WP 0085, Figure 4, Item 8)
Tag, marker (as needed)
(WP 0114, Table 1, Item 27)

Equipment Condition
Intervehicular cable disconnected from prime mover (WP 0005)

NOTE

Configuration of chassis wiring harness varies slightly with model. The M116A2 chassis trailer is shown.

REMOVAL

1. Remove four screws (Figure 1, Item 2), lockwashers (Figure 1, Item 1), and cover (Figure 1, Item 5) from junction box (Figure 1, Item 3) at roadside drawbar (Figure 1, Item 4). Discard lockwashers (Figure 1, Item 1).

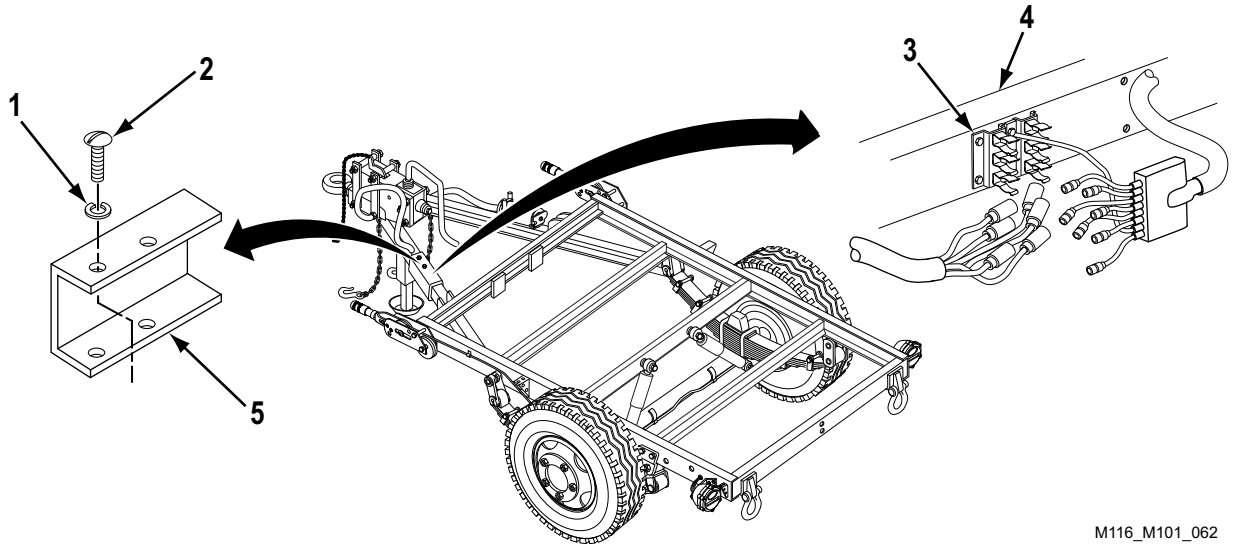

Figure 1. Junction Box Cover Removal.

REMOVAL - Continued

NOTE

If marker bands are missing or illegible, tag wires for installation.

2. At junction box (Figure 2, Item 4) at roadside drawbar (Figure 2, Item 5), remove chassis wiring harness connectors (Figure 2, Item 2) and intervehicular cable connectors (Figure 2, Item 6) from clips (Figure 2, Item 3) and disconnect connectors (Figure 2, Items 2 and 6).
3. At curbside and roadside rear of trailer, remove chassis wiring harness connectors (Figure 2, Item 12) and light connectors (Figure 2, Item 13) from clips (Figure 2, Item 11) and disconnect connectors (Figure 2, Items 12 and 13).
4. Remove electrical tiedown straps (Figure 2, Item 10) from chassis wiring harness (Figure 2, Item 1). Discard tiedown straps (Figure 2, Item 10).

NOTE

The M116A3 has no lockwashers at loop clamp mountings on rear crossmember and roadside frame. A lockwasher is used at loop clamp mounting on roadside drawbar.

5. Remove 11 screws (Figure 2, Item 9) and lockwashers (Figure 2, Item 8) from 11 loop clamps (Figure 2, Item 7) securing chassis wiring harness (Figure 2, Item 1) to rear crossmember, roadside frame, and roadside drawbar (Figure 2, Item 5). Discard lockwashers (Figure 2, Item 8).
6. At front roadside corner of frame, remove nut (Figure 2, Item 14), screw (Figure 2, Item 17), and lockwasher (Figure 2, Item 16) from loop clamp (Figure 2, Item 15) and frame. Discard lockwasher (Figure 2, Item 16).
7. Remove chassis wiring harness (Figure 2, Item 1) from frame. Remove 11 loop clamps (Figure 2, Item 7) and loop clamp (Figure 2, Item 15) from chassis wiring harness (Figure 2, Item 1).

END OF TASK

INSTALLATION

1. Place 11 loop clamps (Figure 2, Item 7) and loop clamp (Figure 2, Item 15) on chassis wiring harness (Figure 2, Item 1). Position chassis wiring harness (Figure 2, Item 1) along rear crossmember, roadside frame, and roadside drawbar (Figure 2, Item 5). Make sure chassis wiring harness connectors (Figure 2, Items 2 and 12) reach their points of connection.
2. At front roadside corner of frame, install loop clamp (Figure 2, Item 15) on frame with new lockwasher (Figure 2, Item 16), screw (Figure 2, Item 17), and nut (Figure 2, Item 14) securing chassis wiring harness (Figure 2, Item 1) to frame.

NOTE

The M116A3 has no lockwashers at loop clamp mountings on rear crossmember and roadside frame. A lockwasher is used at loop clamp mounting on roadside drawbar.

3. Install 11 loop clamps (Figure 2, Item 7) securing chassis wiring harness (Figure 2, Item 1) to rear crossmember, roadside frame, and roadside drawbar (Figure 2, Item 5) with 11 new lockwashers (Figure 2, Item 8) and screws (Figure 2, Item 9).
4. Loop excess chassis wiring harness (Figure 2, Item 1) and secure with new electrical tiedown straps (Figure 2, Item 10).
5. At curbside and roadside rear of trailer, connect chassis wiring harness connectors (Figure 2, Item 12) to light connectors (Figure 2, Item 13). Place connectors (Figure 2, Items 12 and 13) in clips (Figure 2, Item 11).

INSTALLATION - Continued

6. At junction box (Figure 2, Item 4) at roadside drawbar (Figure 2, Item 5), connect chassis wiring harness connectors (Figure 2, Item 2) to intervehicular cable connectors (Figure 2, Item 6). Place connectors (Figure 2, Items 2 and 6) in clips (Figure 2, Item 3).
7. Install cover (Figure 2, Item 18) on roadside drawbar (Figure 2, Item 5) with four new lockwashers (Figure 2, Item 19) and screws (Figure 2, Item 20).

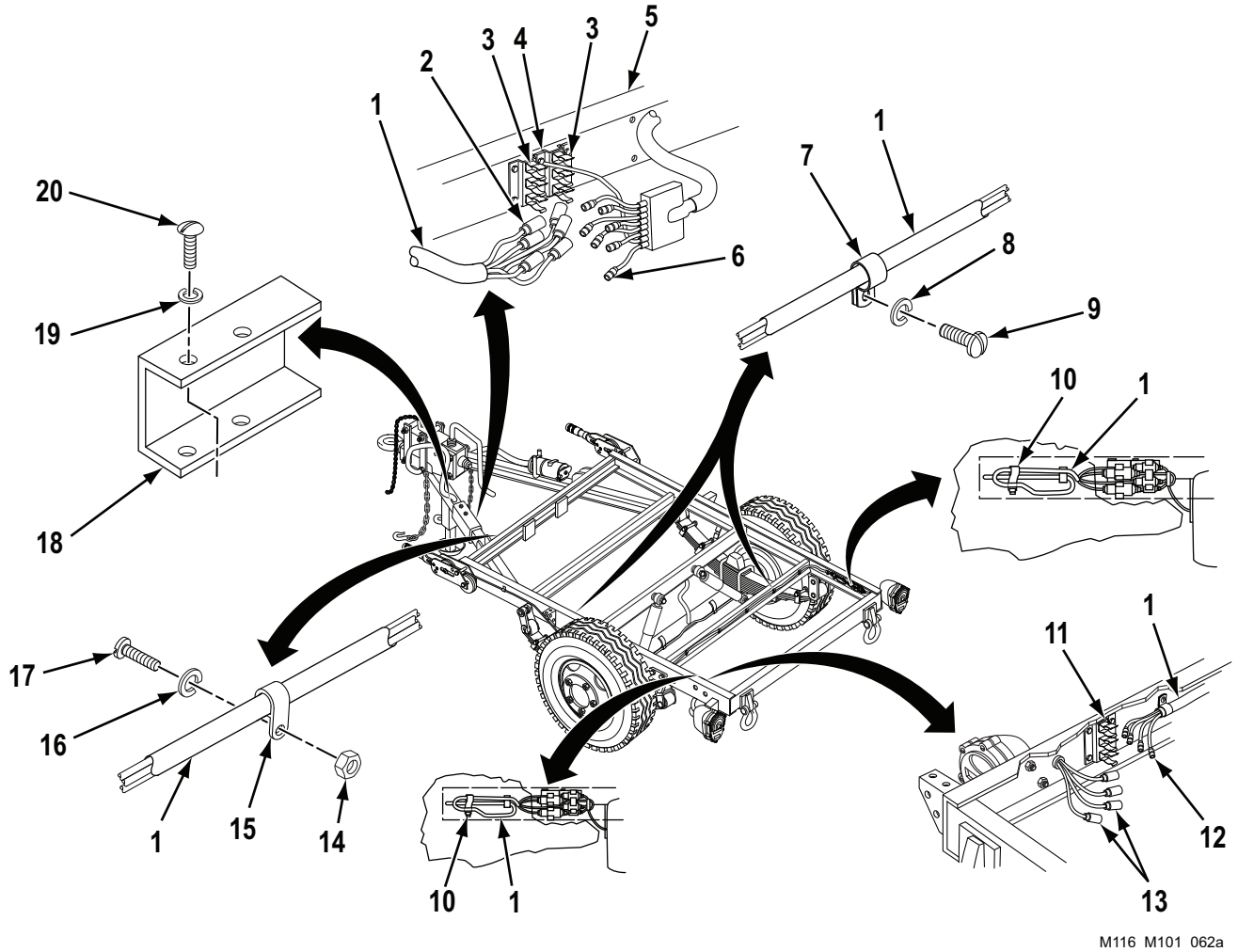

Figure 2. Chassis Wiring Harness Replacement.

END OF TASK

FOLLOW ON TASK

Connect intervehicular cable to prime mover (WP 0005).

END OF TASK

END OF WORK PACKAGE

FIELD MAINTENANCE
INTERVEHICULAR CABLE REPLACEMENT

INITIAL SETUP:

Tools and Special Tools
Tool Kit, General Mechanic's
(WP 0115, Table 1, Item 1)

Equipment Condition
Intervehicular cable disconnected from prime mover (WP 0005)

Materials/Parts
Seven lockwashers (WP 0085, Figure 4, Item 2)
Self-locking nut (WP 0091, Figure 10, Item 13)
Tag, marker (as needed)
(WP 0114, Table 1, Item 25)

NOTE

Configuration of intervehicular cable and mounting varies slightly with model.

REMOVAL

1. Remove four screws (Figure 1, Item 1) and lockwashers (Figure 1, Item 2) and cover (Figure 1, Item 3) from junction box (Figure 1, Item 8) at roadside drawbar (Figure 1, Item 4). Discard lockwashers (Figure 1, Item 2).

NOTE

If marker bands are missing or illegible, tag wires for installation.

2. At junction box (Figure 1, Item 8) at roadside drawbar (Figure 1, Item 4), remove chassis wiring harness connectors (Figure 1, Item 7) and intervehicular cable connectors (Figure 1, Item 6) from clips (Figure 1, Item 5) and disconnect connectors (Figure 1, Items 6 and 7).

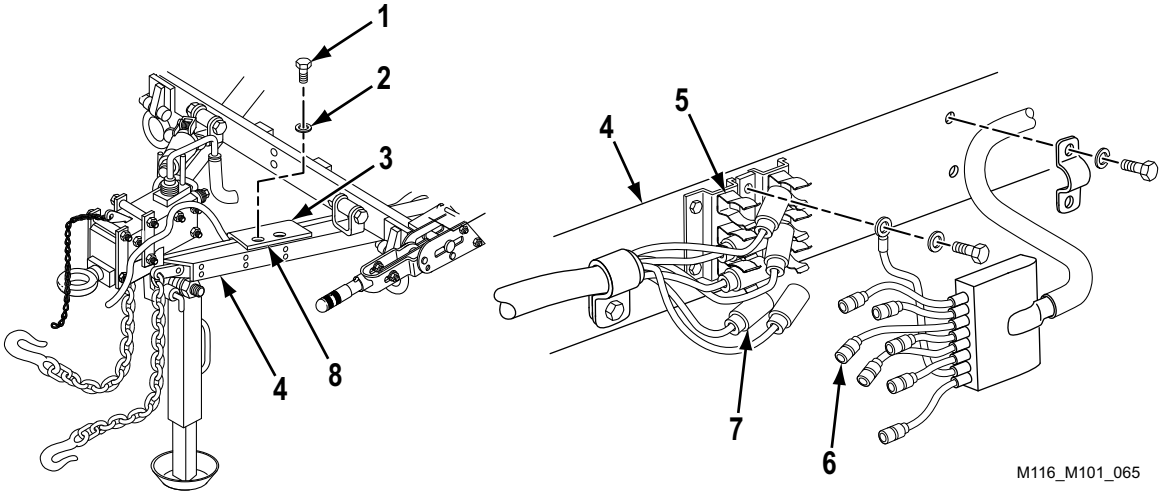

Figure 1. Intervehicular Cable Junction Box Connections Removal.

REMOVAL - Continued

3. Remove screw (Figure 2, Item 9), lockwasher (Figure 2, Item 8), and ground terminal (Figure 2, Item 7) from roadside drawbar (Figure 2, Item 4). Discard lockwasher (Figure 2, Item 8).
4. Remove two screws (Figure 2, Item 13) and lockwashers (Figure 2, Item 12) and retaining strap (Figure 2, Item 11) from intervehicular cable (Figure 2, Item 10) and roadside drawbar (Figure 2, Item 4). Discard lockwashers (Figure 2, Item 12).
5. Remove self-locking nut (Figure 2, Item 18) and loop clamp (Figure 2, Item 17) from hydraulic brake actuator assembly (Figure 2, Item 16). Remove loop clamp (Figure 2, Item 17) from intervehicular cable (Figure 2, Item 10). Discard self-locking nut (Figure 2, Item 18).

END OF TASK

INSTALLATION

1. Position intervehicular cable (Figure 2, Item 10) along roadside drawbar (Figure 2, Item 4).
2. Install ground terminal (Figure 2, Item 7) on drawbar (Figure 2, Item 4) with new lockwasher (Figure 2, Item 8) and screw (Figure 2, Item 9).
3. Connect chassis wiring harness connectors (Figure 2, Item 15) to intervehicular cable connectors (Figure 2, Item 14). Place connectors (Figure 2, Items 14 and 15) in clips (Figure 2, Item 5).
4. Install retaining strap (Figure 2, Item 11) on intervehicular cable (Figure 2, Item 10) and roadside drawbar (Figure 2, Item 4) with two new lockwashers (Figure 2, Item 12) and screws (Figure 2, Item 13).
5. Install loop clamp (Figure 2, Item 17) on intervehicular cable (Figure 2, Item 10). Install loop clamp (Figure 2, Item 17) on hydraulic brake actuator assembly (Figure 2, Item 16) with new self-locking nut (Figure 2, Item 18).
6. Install cover (Figure 2, Item 3) on junction box (Figure 2, Item 6) at roadside drawbar (Figure 2, Item 4) with four new lockwashers (Figure 2, Item 2) and screws (Figure 2, Item 1).

INSTALLATION - Continued

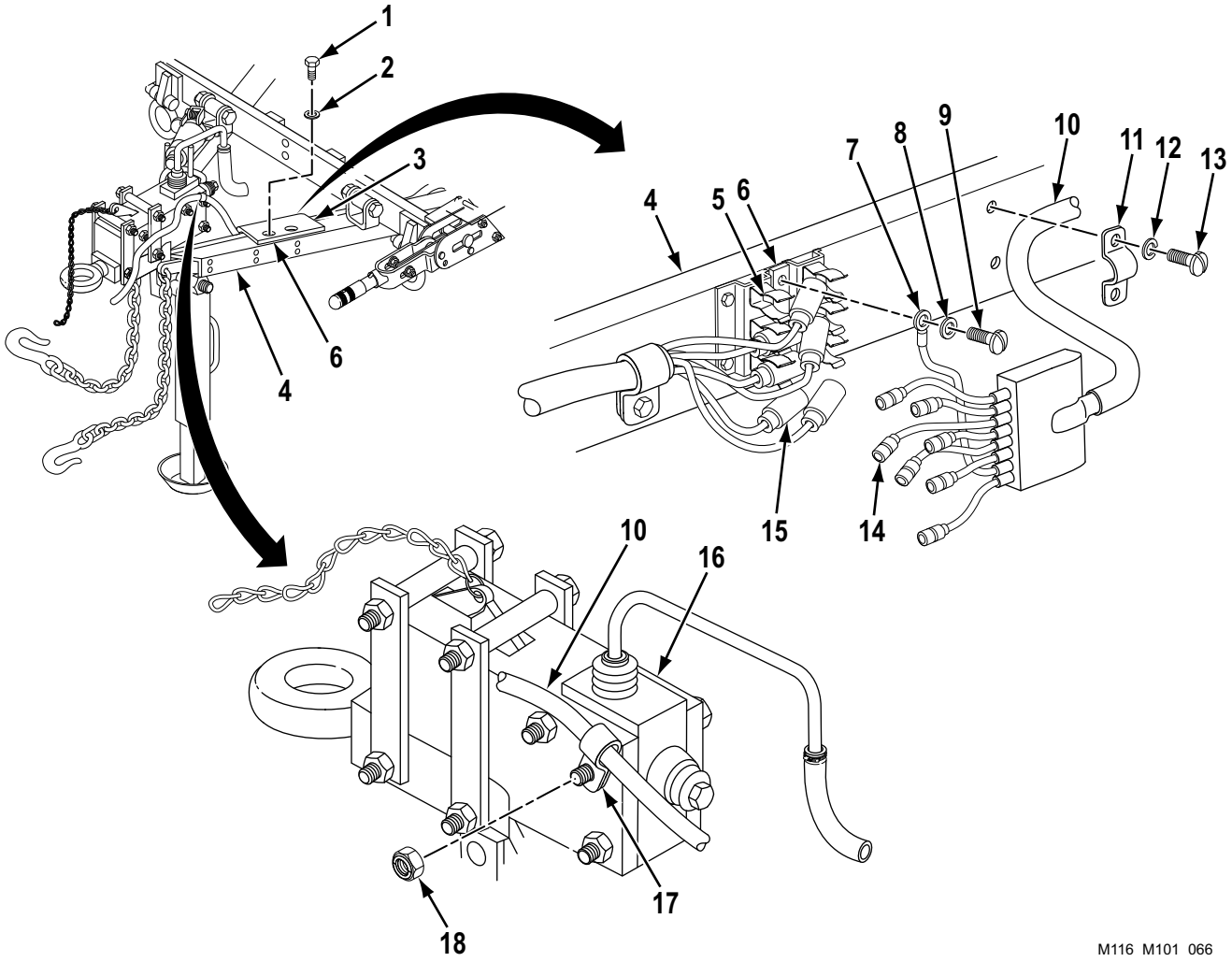

Figure 2. Intervehicular Cable Replacement.

END OF TASK

FOLLOW ON TASK

Connect intervehicular cable to prime mover (WP 0005).

END OF TASK

END OF WORK PACKAGE

FIELD MAINTENANCE
AXLE REPLACEMENT

INITIAL SETUP:

Tools and Special Tools
Tool Kit, General Mechanic's
(WP 0115, Table 1, Item 1)

Materials/Parts
Eight self-locking nuts
(WP 0099, Figure 18, Item 9)

Personnel Required
Two

Equipment Condition
Shock absorbers removed (WP 0066)

Equipment Condition (cont.)
Hydraulic brake lines removed from axle
(WP 0052)
Service brakes removed
(WP 0045) or (WP 0046)

WARNING


Trailer must be supported by blocking or support stands placed under axle or frame throughout maintenance procedure. Failure to comply may result in death or injury to personnel. Seek medical attention in the event of an injury.

NOTE

Replacement of axle is the same for all models. This procedure shows replacement of the M116A2 axle.

REMOVAL

1. Block and support frame securely, front and rear.
2. Place lifting device under midpoint of axle (Figure 1, Item 7) to provide a balanced support.
3. At each end of axle (Figure 1, Item 7), remove four self-locking nuts (Figure 1, Item 6) and washers (Figure 1, Item 5), two U-bolts (Figure 1, Item 1), and bumper (Figure 1, Item 2) from spring assembly (Figure 1, Item 3) and spring plate (Figure 1, Item 4). Discard self-locking nuts (Figure 1, Item 6).

WARNING

Axle weighs over 100 lb (45 kg). Use suitable lifting device. Failure to comply may result in death or injury to personnel. Seek medical attention in the event of an injury.

4. Remove axle (Figure 1, Item 7) from under trailer and from lifting device.

END OF TASK

INSTALLATION

WARNING

Axle weighs over 100 lb (45 kg). Use suitable lifting device. Failure to comply may result in death or injury to personnel. Seek medical attention in the event of an injury.

1. Place midpoint of axle (Figure 1, Item 7) on lifting device and position axle (Figure 1, Item 7) under trailer.
2. Raise axle (Figure 1, Item 7) until it contacts underside of spring assembly (Figure 1, Item 3). At each end of axle (Figure 1, Item 7), engage spring assembly center bolt head (Figure 1, Item 8) with hole in pad on bumper (Figure 1, Item 2).
3. Install bumper (Figure 1, Item 2) on each spring assembly (Figure 1, Item 3).
4. At each end of axle (Figure 1, Item 7), install two U-bolts (Figure 1, Item 1) into grooves of bumper (Figure 1, Item 2) and through holes in spring plate (Figure 1, Item 4).
5. At each end of axle (Figure 1, Item 7), install four washers (Figure 1, Item 5) and new self-locking nuts (Figure 1, Item 6) on two U-bolts (Figure 1, Item 1).
6. Remove lifting device from under axle (Figure 1, Item 7).

INSTALLATION - Continued

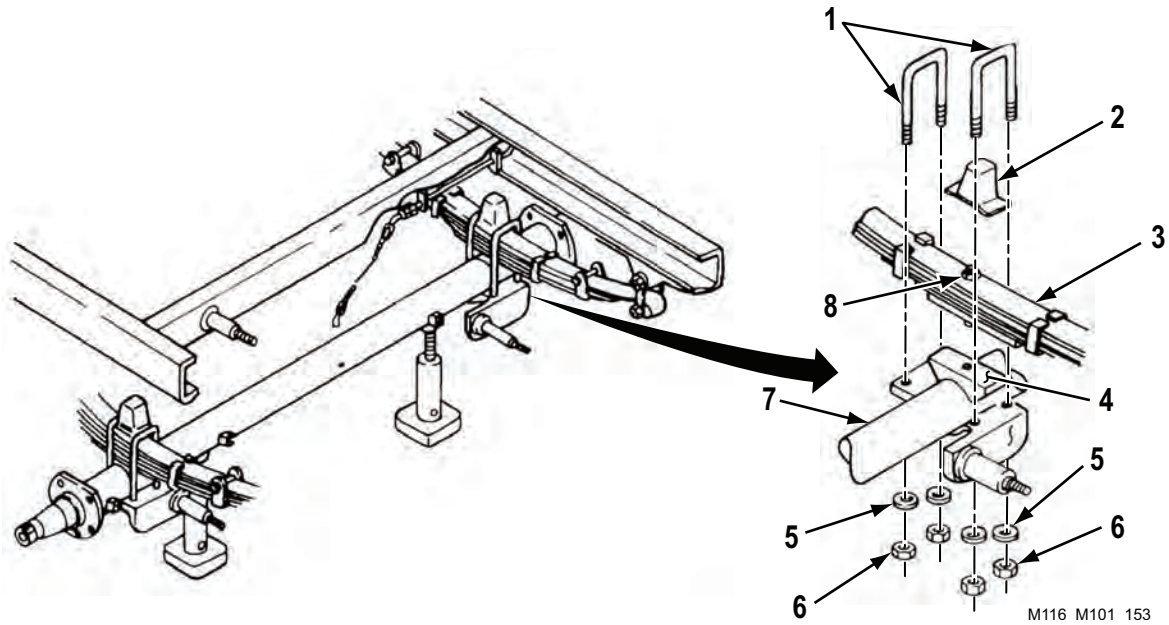

Figure 1. Axle Replacement.

END OF TASK

FOLLOW ON TASK

1. Install service brakes (WP 0045) or (WP 0046).
2. Install hydraulic brake lines on axle (WP 0052).
3. Install shock absorbers (WP 0066).

END OF TASK

END OF WORK PACKAGE

FIELD MAINTENANCE
HANDBRAKE ADJUSTMENT

INITIAL SETUP:

Tools and Special Tools
Tool Kit, General Mechanic's

Tools and Special Tools (cont.)
(WP 0115, Table 1, Item 1)

WARNING


- When performing maintenance on brake system, make sure wheels are securely chocked. Failure to comply may cause trailer to roll, resulting in death or injury to personnel. Seek medical attention in the event of an injury.
- Trailer must be supported by blocking or support stands placed under axle or frame throughout maintenance procedure. Failure to comply may result in death or injury to personnel. Seek medical attention in the event of an injury.

ADJUSTMENT

1. Chock wheel on side of trailer opposite side being adjusted.
2. Place lifting device under axle (Figure 1, Item 1) on side where handbrake is to be adjusted. Raise axle (Figure 1, Item 1) until wheel assembly (Figure 1, Item 2) is off the ground.

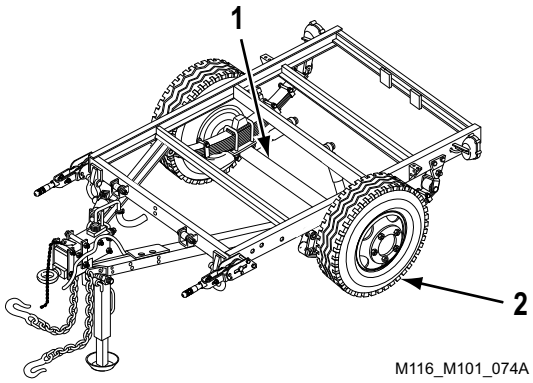

Figure 1. Raising Wheel Assembly.

ADJUSTMENT - Continued

3. Release handbrake lever (Figure 2, Item 3) on side to be adjusted.
4. Loosen lockscrew (Figure 2, Item 2) at adjusting knob (Figure 2, Item 4).
5. Turn adjusting knob (Figure 2, Item 4) clockwise until wheel assembly (Figure 2, Item 5) locks when handbrake lever (Figure 2, Item 3) is no more than two-thirds applied.
6. Release handbrake lever (Figure 2, Item 3) and make sure wheel assembly (Figure 2, Item 5) turns freely.
7. Fully tighten lockscrew (Figure 2, Item 2) at adjusting knob (Figure 2, Item 4).
8. Lower axle (Figure 2, Item 1).
9. Remove chock from wheel.
10. Repeat Steps 1 through 9 for other side.

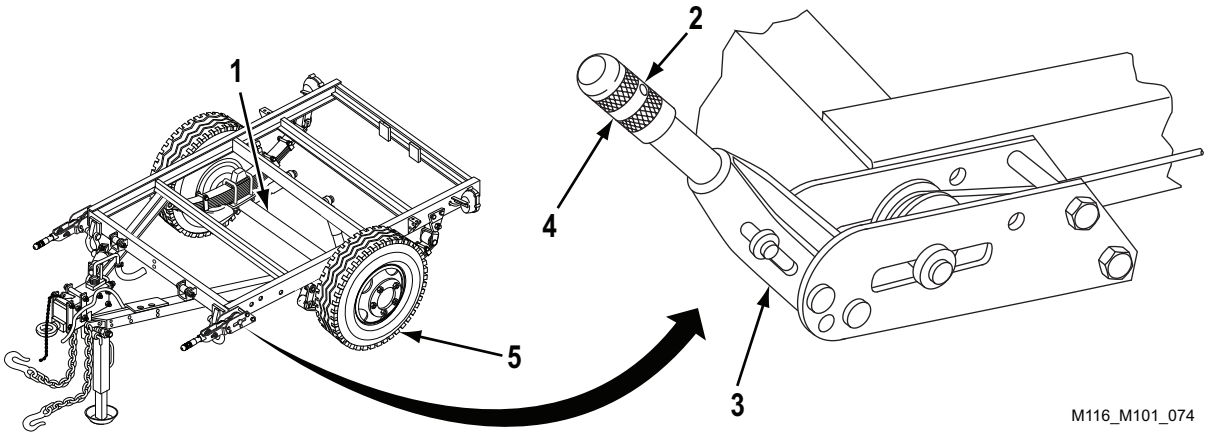

Figure 2. Handbrake Adjustment.

END OF TASK

END OF WORK PACKAGE

FIELD MAINTENANCE
HANDBRAKE LEVER AND LINKAGE MAINTENANCE

INITIAL SETUP:

Tools and Special Tools
Tool Kit, General Mechanic's
(WP 0115, Table 1, Item 1)

Materials/Parts
Four self-locking nuts (WP 0088, Figure 7, Item 1)
Two lockwashers (WP 0088, Figure 7, Item 11)
Degreasing solvent
(WP 0114, Table 1, Item 9)
Rag, wiping (WP 0114, Table 1, Item 24)

References
WP 0034

References (cont.)
WP 0043
WP 0077

Equipment Condition
Hub and brake drum removed
(WP 0054) or (WP 0055)

REMOVAL

1. At wheel brake, pull spring (Figure 1, Item 4) away from swaged sleeve (Figure 1, Item 3) and unhook swaged sleeve (Figure 1, Item 3) of cable assembly (Figure 1, Item 1) from handbrake lever (Figure 1, Item 2).

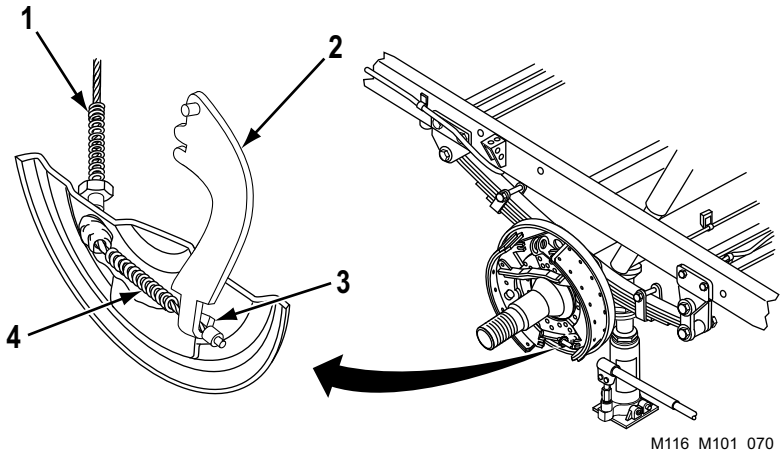

Figure 1. Brake Cable Assembly Removal From Wheel Brake Lever.

REMOVAL - Continued

2. Compress lock tabs (Figure 2, Item 4).
3. Remove cable assembly (Figure 2, Item 1) from handbrake lever (Figure 2, Item 2) through backing plate (Figure 2, Item 3).

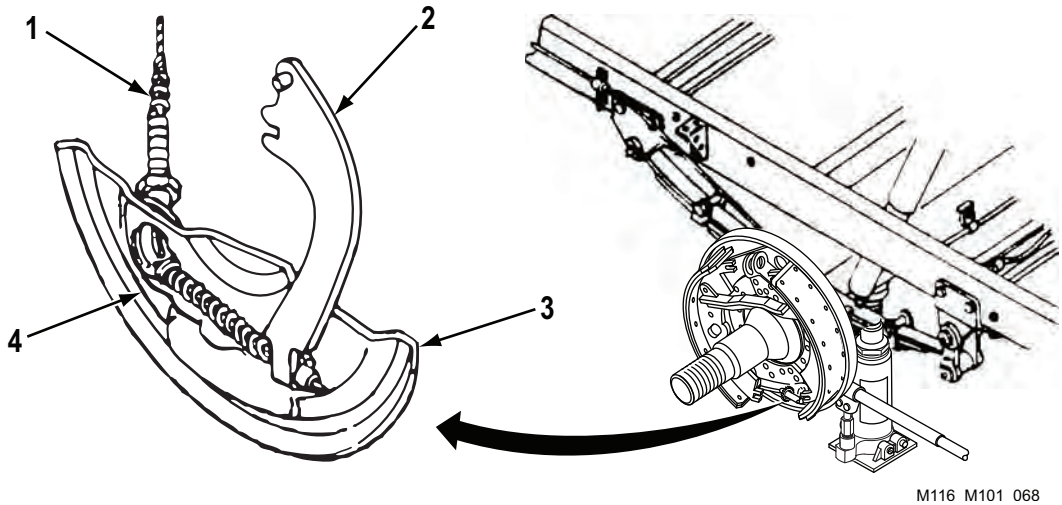

Figure 2. Brake Cable Assembly Removal From Wheel Brake.

NOTE

Configuration varies. Perform Step 4 or 5 as applicable.

4. Remove two self-locking nuts (Figure 3, Item 6) and machine screws (Figure 3, Item 1), retaining strap (Figure 3, Item 2), cable assembly (Figure 3, Item 3), and spacer plate (Figure 3, Item 4) from frame (Figure 3, Item 5). Discard self-locking nuts (Figure 3, Item 6).
5. Remove two nuts (Figure 3, Item 7), lockwashers (Figure 3, Item 8), and U-bolt (Figure 3, Item 9). Discard lockwashers (Figure 3, Item 8).

REMOVAL - Continued

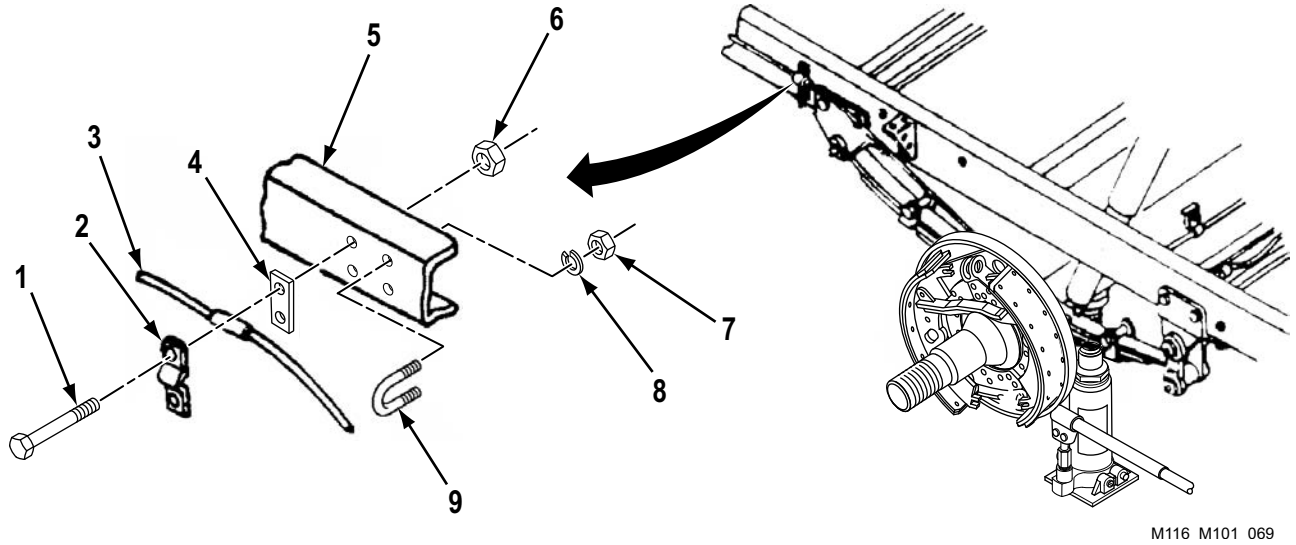

Figure 3. Brake Cable Assembly Removal From Frame.

6. Remove two self-locking nuts (Figure 4, Item 1), cap screws (Figure 4, Item 6), and spacers (Figure 4, Item 5), handbrake lever (Figure 4, Item 7), and two washers (Figure 4, Item 3) from frame (Figure 4, Item 2). Discard self-locking nuts (Figure 4, Item 1).
7. Disconnect cable assembly (Figure 4, Item 4) from handbrake lever (Figure 4, Item 7).
8. Repeat Steps 1 through 7 for removal of other handbrake lever and linkage.

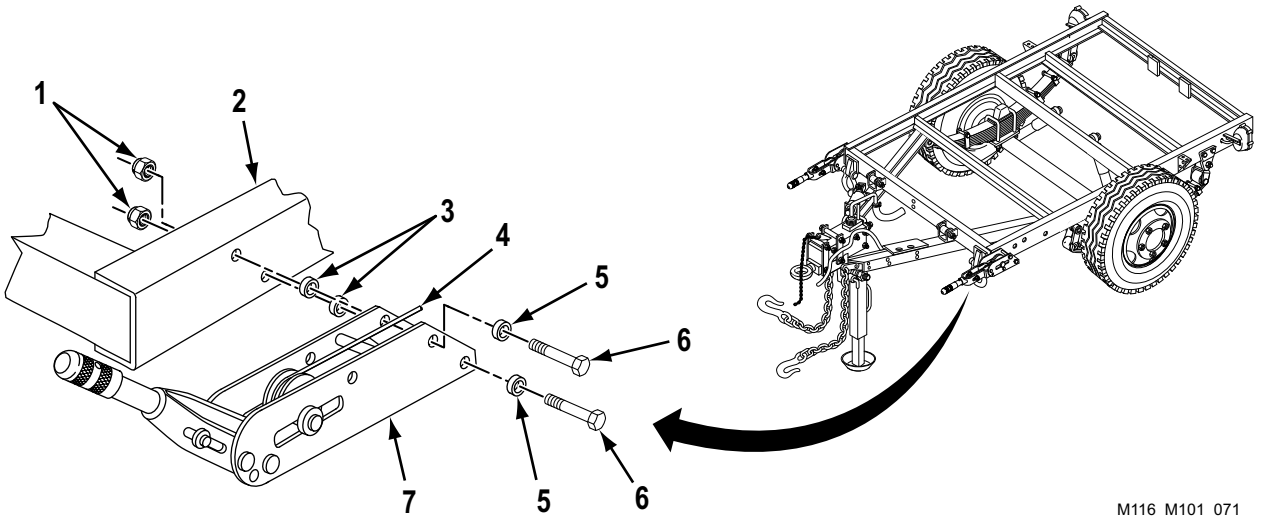

Figure 4. Handbrake Lever Removal.

END OF TASK

CLEANING AND INSPECTION

WARNING


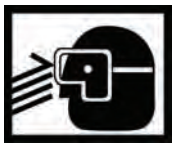

- Solvent cleaning compound MIL-PRF-680 may be irritating to the eyes and skin. Use protective gloves and goggles. First aid for skin contact: remove contaminated clothing. Wash skin thoroughly with soap and water. First aid for eye contact: flush with water until irritation subsides. If symptoms persist, seek medical attention. Failure to comply may result in death or injury to personnel. Seek medical attention in the event of an injury.
- Use solvent cleaning compound MIL-PRF-680 in a well ventilated area. Use respirator as needed. Accidental ingestion can cause irritation of digestive tract and respiratory tract. May cause lung and central nervous system damage. Can be fatal if swallowed. Inhalation of high/massive concentrations can cause coma or be fatal. First aid for ingestion: do not induce vomiting. Seek immediate medical attention. First aid for inhalation: move to fresh air. If not breathing, provide artificial respiration. If symptoms persist, seek medical attention. Failure to comply may result in death or injury to personnel. Seek medical attention in the event of an injury.
- MIL-PRF-680 solvent is combustible; DO NOT use or store near heat, sparks, flame, or other ignition sources. Use mechanical ventilation whenever product is used in a confined space, heated above ambient temperatures, or agitated. Keep container sealed when not in use. Failure to comply may result in death or injury to personnel. Seek medical attention in the event of an injury.
- Improper cleaning methods and use of unauthorized cleaning liquids or solvents can injure personnel and damage equipment. Failure to comply may result in death or injury to personnel. Seek medical attention in the event of an injury.
- Rags saturated with solvent cleaning compound must be disposed of IAW authorized facility procedures. Failure to comply may result in death or injury to personnel. Seek medical attention in the event of an injury.
- Solvent cleaning compound MIL-PRF-680 is toxic and flammable. Always wear protective goggles and gloves, and use only in a well-ventilated area. Avoid contact with skin, eyes, and clothes, and DO NOT breathe vapors. DO NOT use near open flame or excessive heat. Failure to comply may result in death or injury to personnel. Seek medical attention in the event of an injury.

1. Clean all removed components with cleaning solvent and soft cloth rag and allow to dry.
2. Inspect handbrake lever for bends, breaks, corrosion, and freedom of action. Replace handbrake lever if damaged.
3. Inspect cable assembly for frays, cracks, distortion, corrosion, and freedom of movement in conduit. Replace cable assembly if damaged.
4. Inspect all mounting hardware for damage. Replace if damaged.

END OF TASK

INSTALLATION

1. Connect cable assembly (Figure 5, Item 4) to handbrake lever (Figure 5, Item 7).

INSTALLATION - Continued

2. Position two washers (Figure 5, Item 3) at frame (Figure 5, Item 2) and install handbrake lever (Figure 5, Item 7) with two spacers (Figure 5, Item 5), cap screws (Figure 5, Item 6), and new self-locking nuts (Figure 5, Item 1).

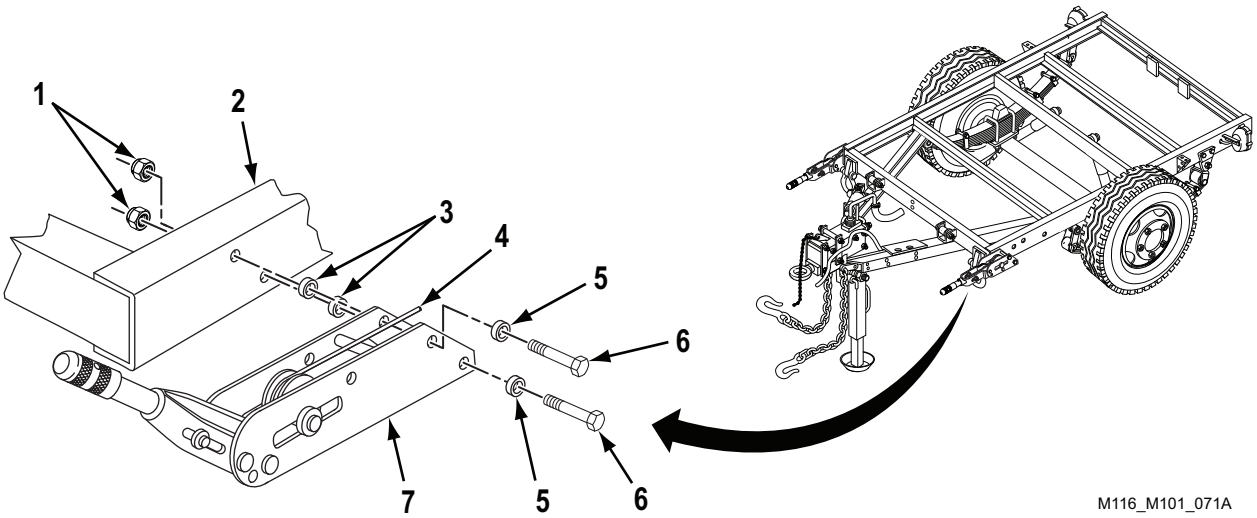

Figure 5. Handbrake Lever Installation.

INSTALLATION - Continued

CAUTION

Cable must be positioned below top spacer. To do otherwise causes cable to jump off pulley, resulting in damage to cable. Failure to comply may result in damage to, or destruction of, equipment or mission.

3. Feed cable assembly (Figure 6, Item 1) through backing plate (Figure 6, Item 4) and position at handbrake lever (Figure 6, Item 2).
4. Make sure lock tabs (Figure 6, Item 6) are spread and hold cable assembly (Figure 6, Item 1) in backing plate (Figure 6, Item 4).
5. Pull spring (Figure 6, Item 5) away from swaged sleeve (Figure 6, Item 3), and hook swaged sleeve (Figure 6, Item 3) to handbrake lever (Figure 6, Item 4).

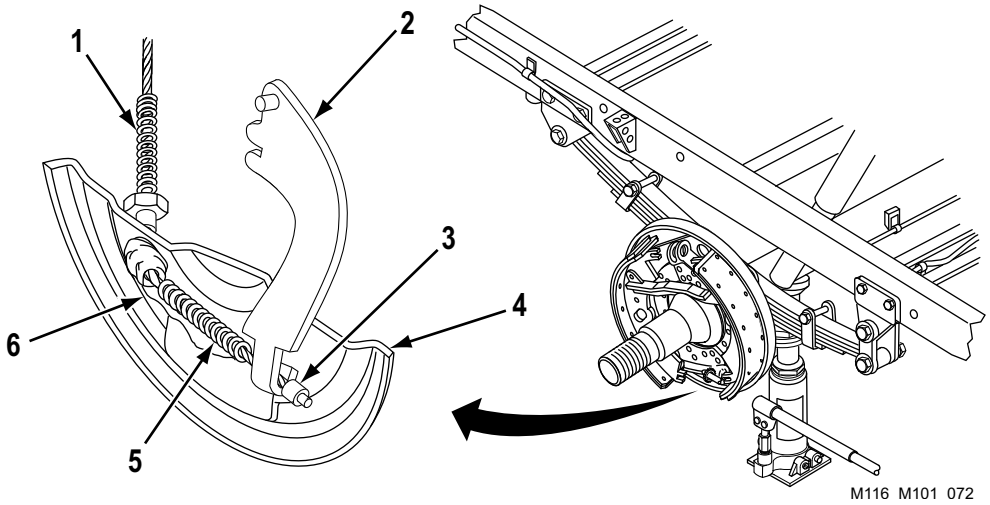

Figure 6. Brake Cable Assembly to Wheel Brake Installation

NOTE

Configuration varies. If installing new cable and U-bolt, perform Steps 6 and 7.

6. Drill two new 5/16 in (12.7 cm) holes (Figure 7, Item 9) 1 in (2.54 cm) apart and 1 in (2.54 cm) behind existing mounting holes in frame side.

NOTE

Align U-bolt in groove of cable end.

7. Install U-bolt (Figure 7, Item 10), two new lockwashers (Figure 7, Item 8), and nuts (Figure 7, Item 7).
8. Install spacer plate (Figure 7, Item 4), cable assembly (Figure 7, Item 3), and retaining strap (Figure 7, Item 2) on frame (Figure 7, Item 5) with two machine screws (Figure 7, Item 1) and new self-locking nuts (Figure 7, Item 6).
9. Repeat Steps 1 through 8 for installation of other handbrake lever and linkage.

INSTALLATION - Continued

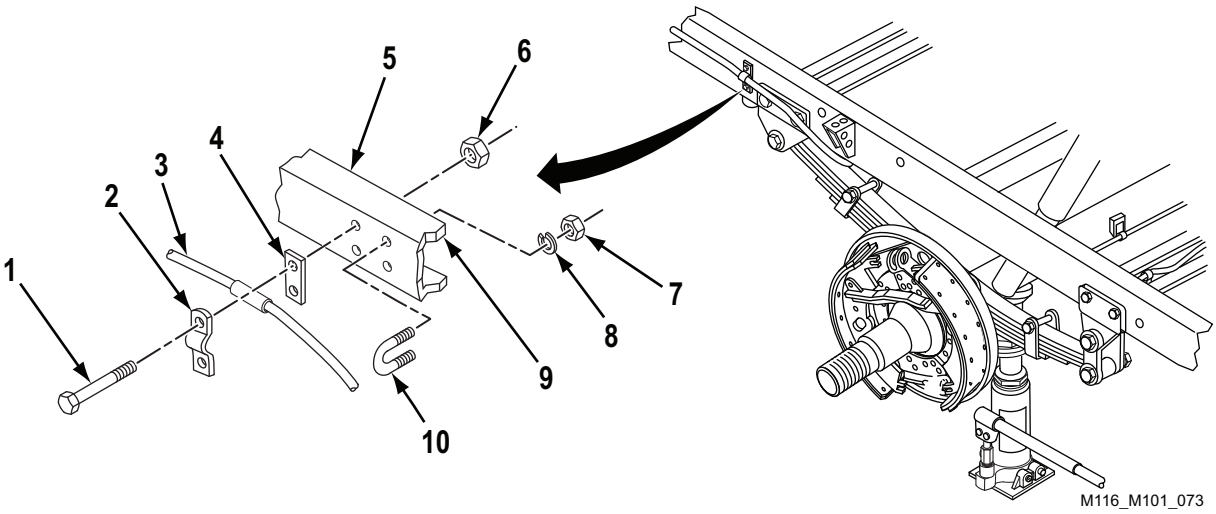

Figure 7. Brake Cable Assembly to Frame Installation.

END OF TASK

FOLLOW ON TASK

1. Install hub and brake drum (WP 0054) or (WP 0055).
2. Install wheel assembly (WP 0034).
3. Lubricate handbrake lever and linkage (WP 0077).
4. Adjust handbrake (WP 0043).

END OF TASK

END OF WORK PACKAGE

FIELD MAINTENANCE
SERVICE BRAKE MAINTENANCE (ALL EXCEPT M101A1 AND M116A1)

INITIAL SETUP:

Tools and Special Tools
Tool Kit, General Mechanic's
(WP 0115, Table 1, Item 1)
Wrench, Torque (WP 0115, Table 1, Item 2)

Materials/Parts
Five lockwashers (WP 0089, Figure 8, Item 5)
Clamp (WP 0089, Figure 8, Item 9)
Lockwasher (WP 0090, Figure 9, Item 4)
Degreasing solvent

Materials/Parts (cont.)
(WP 0114, Table 1, Item 9)
Rag, wiping
(WP 0114, Table 1, Item 24)

References
WP 0043
WP 0048
WP 0053

Equipment Condition
Hub and brake drum removed (WP 0055)

REMOVAL

WARNING


DO NOT handle brake shoes, brake drums, or other brake components unless area has been properly cleaned. Dust, which can be dangerous if you breathe it, may be on these components. Wear an approved filter mask and gloves. NEVER use compressed air or a dry brush to clean brake components. Clean dust or mud away from brake components with water and a wet, soft brush or cloth. Failure to comply may result in death or injury to personnel. Seek medical attention in the event of an injury.

NOTE

It is not necessary to remove backing plate and service brake assembly from axle in order to disassemble service brake assembly. Disassembly may be performed with service brake assembly on axle or on work bench.

REMOVAL - Continued

1. At wheel brake, pull spring (Figure 1, Item 2) away from swaged sleeve (Figure 1, Item 5) and unhook swaged sleeve (Figure 1, Item 5) of handbrake cable assembly (Figure 1, Item 1) from lever (Figure 1, Item 4).
2. Compress lock tabs (Figure 1, Item 6).
3. Remove handbrake cable assembly (Figure 1, Item 1) from lever (Figure 1, Item 4) through backing plate (Figure 1, Item 3).

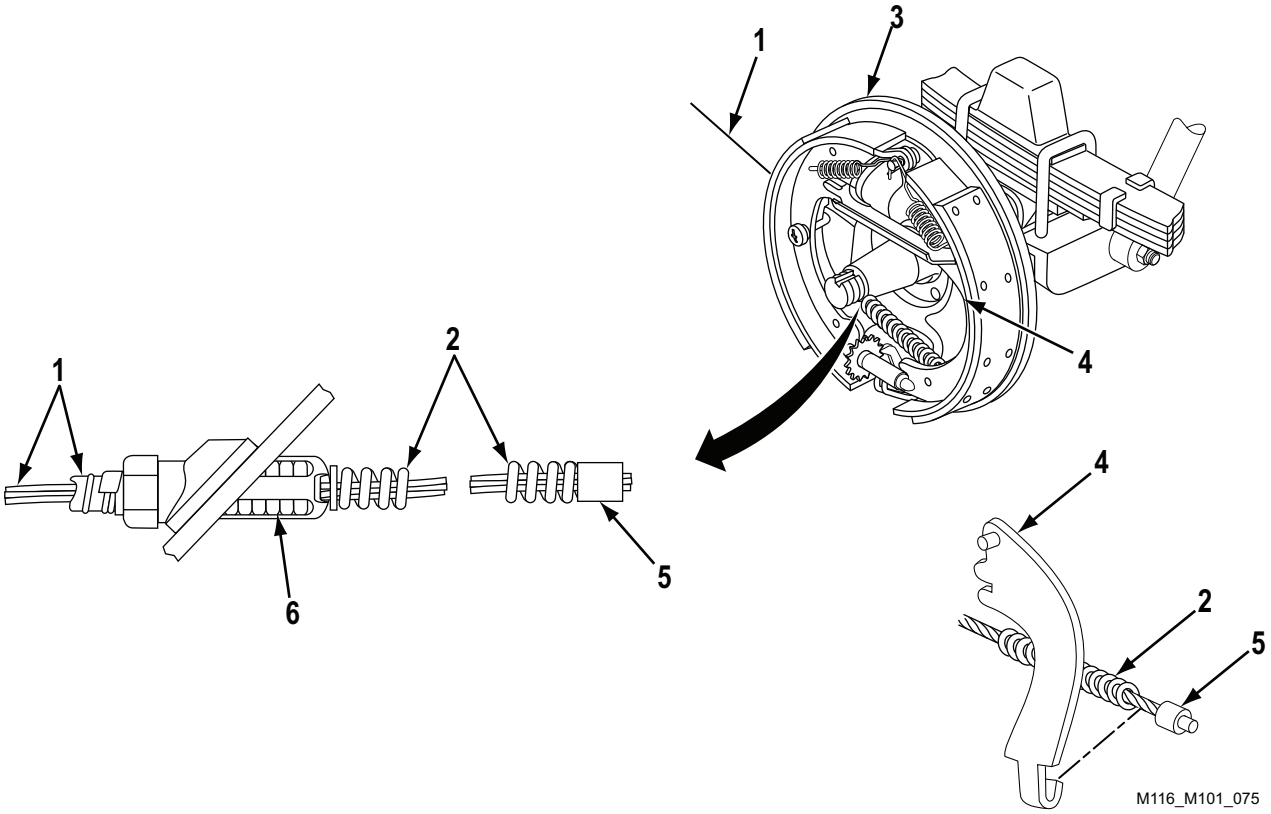

Figure 1. Handbrake Cable Assembly Removal.

REMOVAL - Continued

NOTE

Use a suitable container to catch any draining brake fluid. Make sure all spills are cleaned up. Refer to local procedures for responding to fluid spills and disposal of clean up materials. Refer to local procedures for storage and disposal of drained fluids.

4. Disconnect hydraulic tube assembly (Figure 2, Item 3) from wheel cylinder (Figure 2, Item 2) at backing plate (Figure 2, Item 1).
5. Remove five nuts (Figure 2, Item 7), lockwashers (Figure 2, Item 6), and cap screws (Figure 2, Item 5) and backing plate (Figure 2, Item 1) from axle (Figure 2, Item 4). Discard lockwashers (Figure 2, Item 6).

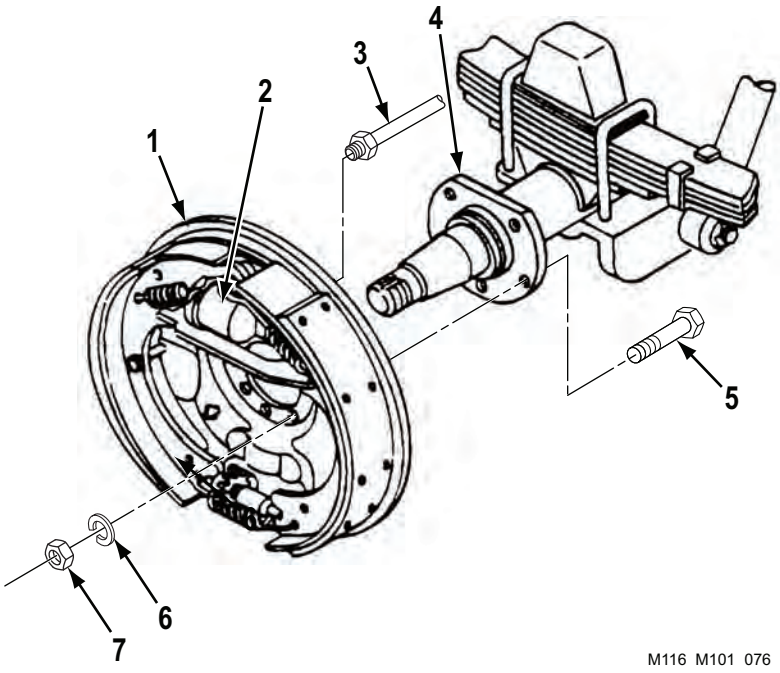

Figure 2. Backing Plate Removal.

END OF TASK

DISASSEMBLY

1. Remove two springs (Figure 3, Item 1) from two brake shoes (Figure 3, Items 5 and 13) and anchor pin (Figure 3, Item 6). Remove plate (Figure 3, Item 4) from anchor pin (Figure 3, Item 6).
2. Remove spring (Figure 3, Item 16) and adjusting screw (Figure 3, Item 17) from two brake shoes (Figure 3, Items 5 and 13).
3. Remove two retainers (Figure 3, Item 2), springs (Figure 3, Item 3), and pins (Figure 3, Item 7) from two brake shoes (Figure 3, Items 5 and 13) and backing plate (Figure 3, Item 10).
4. Remove two brake shoes (Figure 3, Items 5 and 13), strut (Figure 3, Item 18), and spring (Figure 3, Item 19) from backing plate (Figure 3, Item 10).
5. Remove clamp (Figure 3, Items 15), spring tension washer (Figure 3, Item 14), and lever (Figure 3, Item 12) from brake shoe (Figure 3, Item 13). Discard clamp (Figure 3, Item 15).
6. Remove bolt (Figure 3, Item 8), lockwasher (Figure 3, Item 9), and wheel cylinder (Figure 3, Item 11) from backing plate (Figure 3, Item 10). Discard lockwasher (Figure 3, Item 9).

DISASSEMBLY - Continued

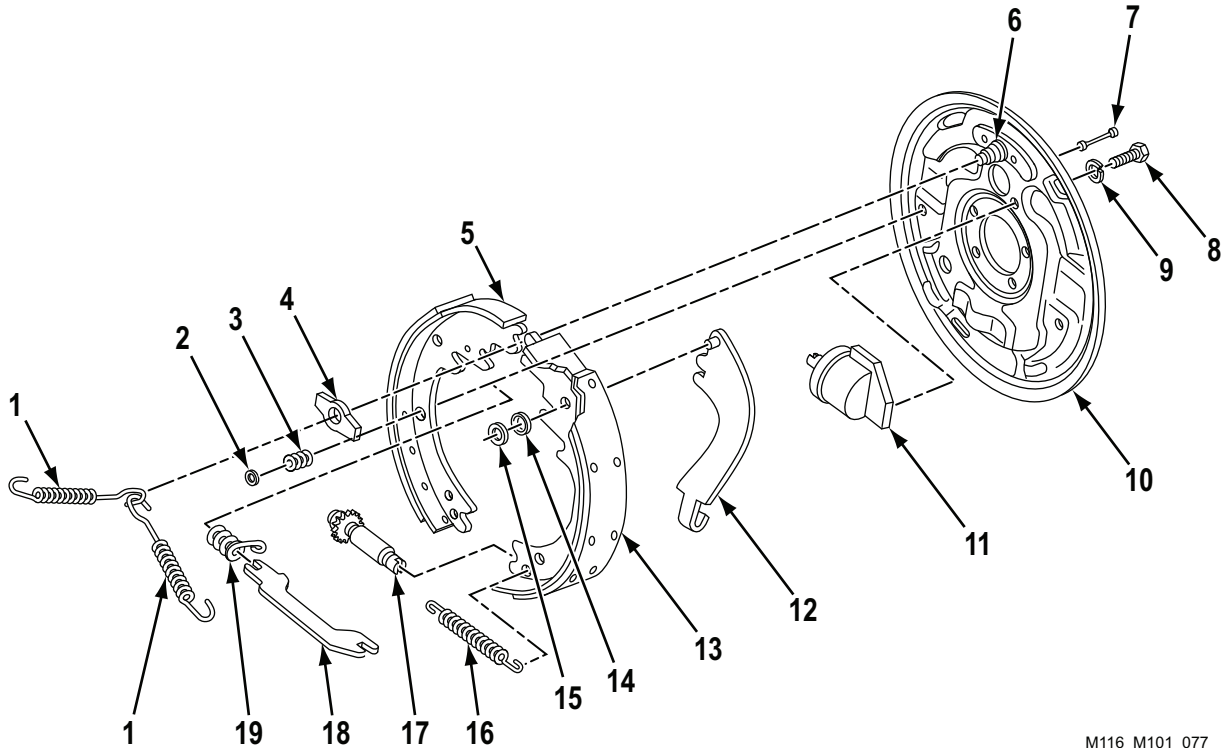

Figure 3. Service Brake Disassembly.

END OF TASK

CLEANING AND INSPECTION

WARNING


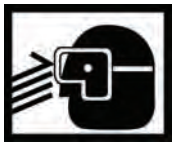

- Solvent cleaning compound MIL-PRF-680 may be irritating to the eyes and skin. Use protective gloves and goggles. First aid for skin contact: remove contaminated clothing. Wash skin thoroughly with soap and water. First aid for eye contact: flush with water until irritation subsides. If symptoms persist, seek medical attention. Failure to comply may result in death or injury to personnel. Seek medical attention in the event of an injury.
- Use solvent cleaning compound MIL-PRF-680 in a well ventilated area. Use respirator as needed. Accidental ingestion can cause irritation of digestive tract and respiratory tract. May cause lung and central nervous system damage. Can be fatal if swallowed. Inhalation of high/massive concentrations can cause coma or be fatal. First aid for ingestion: do not induce vomiting. Seek immediate medical attention. First aid for inhalation: move to fresh air. If not breathing, provide artificial respiration. If symptoms persist, seek medical attention. Failure to comply may result in death or injury to personnel. Seek medical attention in the event of an injury.
- MIL-PRF-680 solvent is combustible; DO NOT use or store near heat, sparks, flame, or other ignition sources. Use mechanical ventilation whenever product is used in a confined space, heated above ambient temperatures, or agitated. Keep container sealed when not in use. Failure to comply may result in death or injury to personnel. Seek medical attention in the event of an injury.
- Improper cleaning methods and use of unauthorized cleaning liquids or solvents can injure personnel and damage equipment. Failure to comply may result in death or injury to personnel. Seek medical attention in the event of an injury.
- Rags saturated with solvent cleaning compound must be disposed of IAW authorized facility procedures. Failure to comply may result in death or injury to personnel. Seek medical attention in the event of an injury.
- Solvent cleaning compound MIL-PRF-680 is toxic and flammable. Always wear protective goggles and gloves, and use only in a well-ventilated area. Avoid contact with skin, eyes, and clothes, and DO NOT breathe vapors. DO NOT use near open flame or excessive heat. Failure to comply may result in death or injury to personnel. Seek medical attention in the event of an injury.

1. Clean all removed components with cleaning solvent and soft cloth rag and allow to dry.
2. Inspect backing plate for cracks, breaks, corrosion, or other damage. Replace backing plate if damaged.

CLEANING AND INSPECTION - Continued

WARNING

If one brake shoe is being replaced, replace all brake shoes on axle. The combination of old brake shoes with new brake shoes will cause uneven braking. Failure to comply may result in death or injury to personnel. Seek medical attention in the event of an injury.

3. Inspect brake shoe linings for cracks or grease. Measure lining thickness. Lining thickness must be at least 1/8 in (3.18 mm). Replace brake shoes if damaged, grease soaked, or worn.
4. Inspect strut and lever for cracks and wear. Replace if damaged.
5. Inspect adjusting screw for corrosion or wear on teeth. Replace adjusting screw if corroded or worn.
6. Inspect wheel cylinder for leakage and corrosion. Replace if damaged.
7. Inspect all other removed components for cracks, breaks, distortion, corrosion, or other damage. Replace any damaged components.

END OF TASK

ASSEMBLY

1. Install wheel cylinder (Figure 4, Item 11) on backing plate (Figure 4, Item 10) with new lockwasher (Figure 4, Item 9) and bolt (Figure 4, Item 8). Torque bolt between 130 – 230 lb-in (15 – 26 N•m).
2. Install lever (Figure 4, Item 12) on brake shoe (Figure 4, Item 13) with spring tension washer (Figure 4, Item 14) and new clamp (Figure 4, Item 15). Pinch ends of clamp (Figure 4, Item 15) to retain it securely in place.
3. Install two brake shoes (Figure 4, Items 5 and 13), pins (Figure 4, Item 7), and springs (Figure 4, Item 3) on backing plate (Figure 4, Item 10). Install two retainers (Figure 4, Item 2), spring (Figure 4, Item 19), and strut (Figure 4, Item 18) on backing plate (Figure 4, Item 10).
4. Turn in adjusting screw (Figure 4, Item 17) fully. Install adjusting screw (Figure 4, Item 17) and spring (Figure 4, Item 16) between two brake shoes (Figure 4, Items 5 and 13).
5. Install plate (Figure 4, Item 4) on anchor pin (Figure 4, Item 6).
6. Install two springs (Figure 4, Item 1) on anchor pin (Figure 4, Item 6) and brake shoes (Figure 4, Items 5 and 13).

ASSEMBLY - Continued

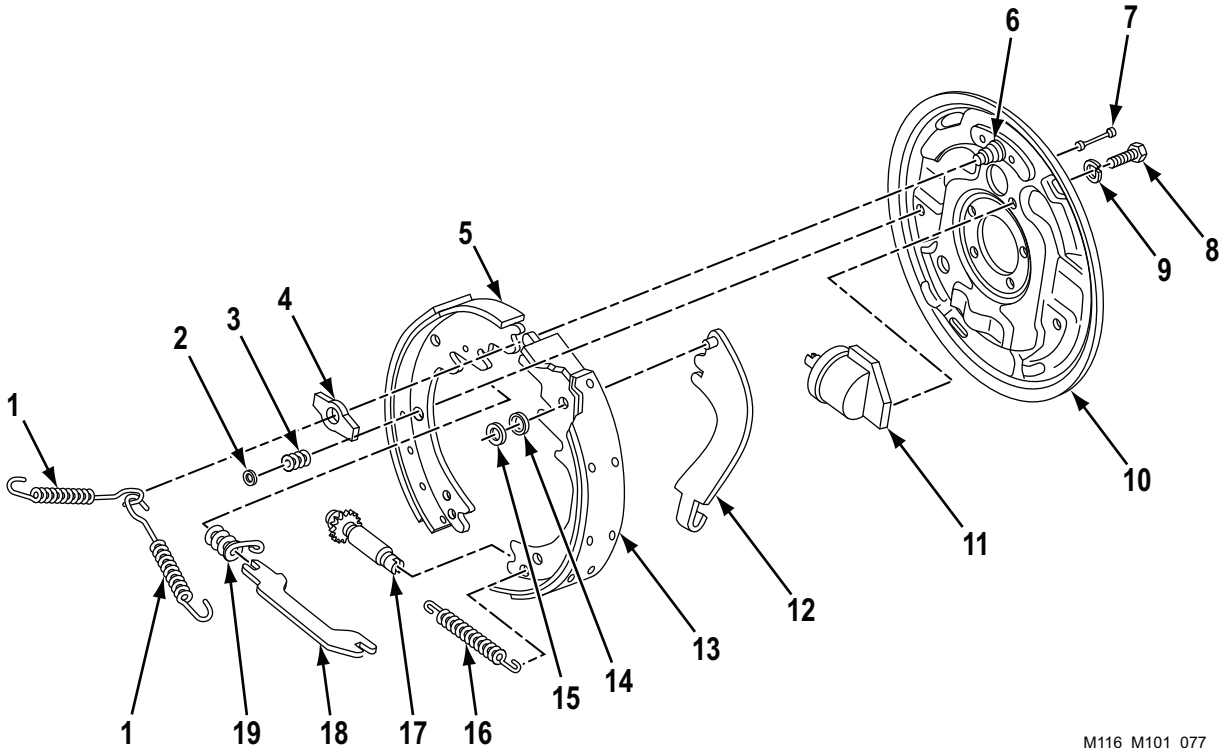

Figure 4. Service Brake Assembly.

END OF TASK

INSTALLATION

1. Install backing plate (Figure 5, Item 1) and service brake assembly on axle (Figure 5, Item 4) with five cap screws (Figure 5, Item 5), new lockwashers (Figure 5, Item 6), and nuts (Figure 5, Item 7).
2. Connect hydraulic tube assembly (Figure 5, Item 3) to wheel cylinder (Figure 5, Item 2) at backing plate (Figure 5, Item 1).

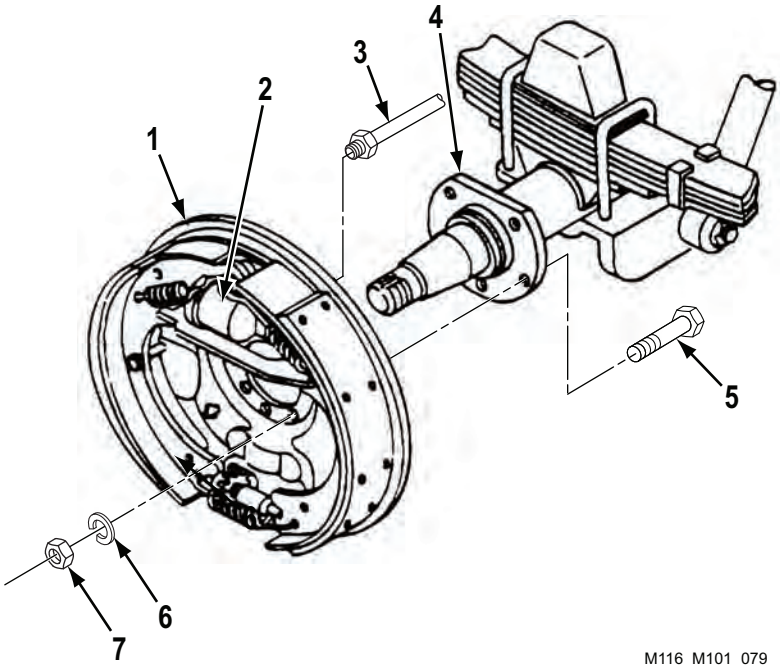

Figure 5. Backing Plate Installation.

INSTALLATION - Continued

3. Feed handbrake cable assembly (Figure 6, Item 1) through backing plate (Figure 6, Item 3) and position at lever (Figure 6, Item 4). Make sure lock tabs (Figure 6, Item 6) are spread and hold handbrake cable assembly (Figure 6, Item 1) securely in backing plate (Figure 6, Item 3).
4. Pull spring (Figure 6, Item 2) away from swaged sleeve (Figure 6, Item 5), and hook swaged sleeve (Figure 6, Item 5) to lever (Figure 6, Item 4).

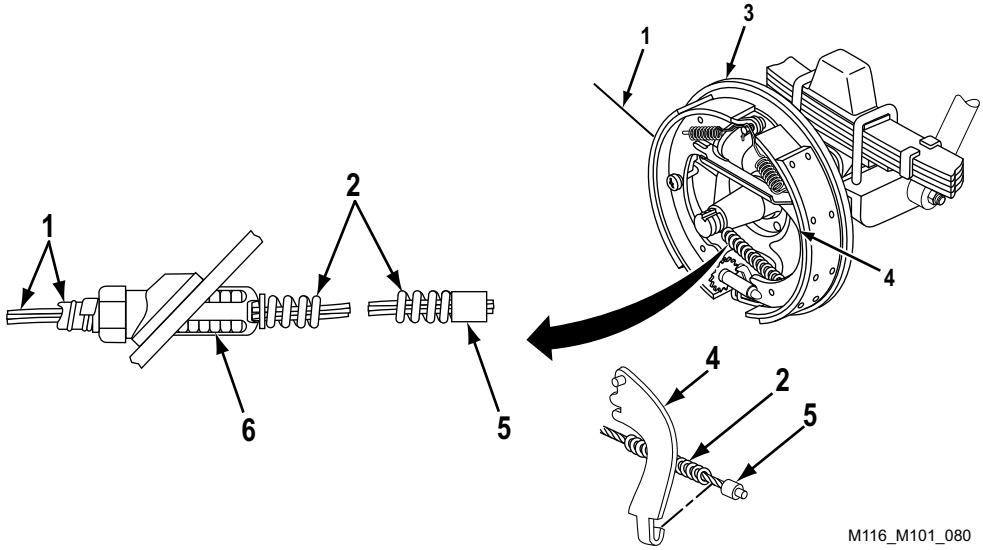

Figure 6. Handbrake Cable Assembly Installation.

END OF TASK

FOLLOW ON TASK

1. Install hub and brake drum (WP 0055).
2. Bleed hydraulic brake system (WP 0053).
3. Adjust service brakes (WP 0048).
4. Adjust handbrakes (WP 0043).

END OF TASK

END OF WORK PACKAGE

FIELD MAINTENANCE
SERVICE BRAKE MAINTENANCE (M101A1 AND M116A1)

INITIAL SETUP:

Tools and Special Tools
Tool Kit, General Mechanic's
(WP 0115, Table 1, Item 1)

Materials/Parts
Three clips (WP 0089, Figure 8, Item 20)
Degreasing solvent

Materials/Parts (cont.)
(WP 0114, Table 1, Item 9)
Rag, wiping (WP 0114, Table 1, Item 24)

References
WP 0043
WP 0048

Equipment Condition
Hub and brake drum removed (WP 0055)

REMOVAL

WARNING


DO NOT handle brake shoes, brake drums, or other brake components unless area has been properly cleaned. Dust, which can be dangerous if you breathe it, may be on these components. Wear an approved filter mask and gloves. NEVER use compressed air or a dry brush to clean brake components. Clean dust or mud away from brake components with water and a wet, soft brush or cloth. Failure to comply may result in death or injury to personnel. Seek medical attention in the event of an injury.

NOTE

It is not necessary to remove backing plate and service brake assembly from axle in order to disassemble service brake assembly. Disassembly may be performed with service brake assembly on axle or on work bench.

REMOVAL - Continued

1. Unhook swaged sleeve (Figure 1, Item 2) from parking brake lever (Figure 1, Item 1).
2. Remove five nuts (Figure 1, Item 4), cap screws (Figure 1, Item 6), and backing plate (Figure 1, Item 3) from axle (Figure 1, Item 5).

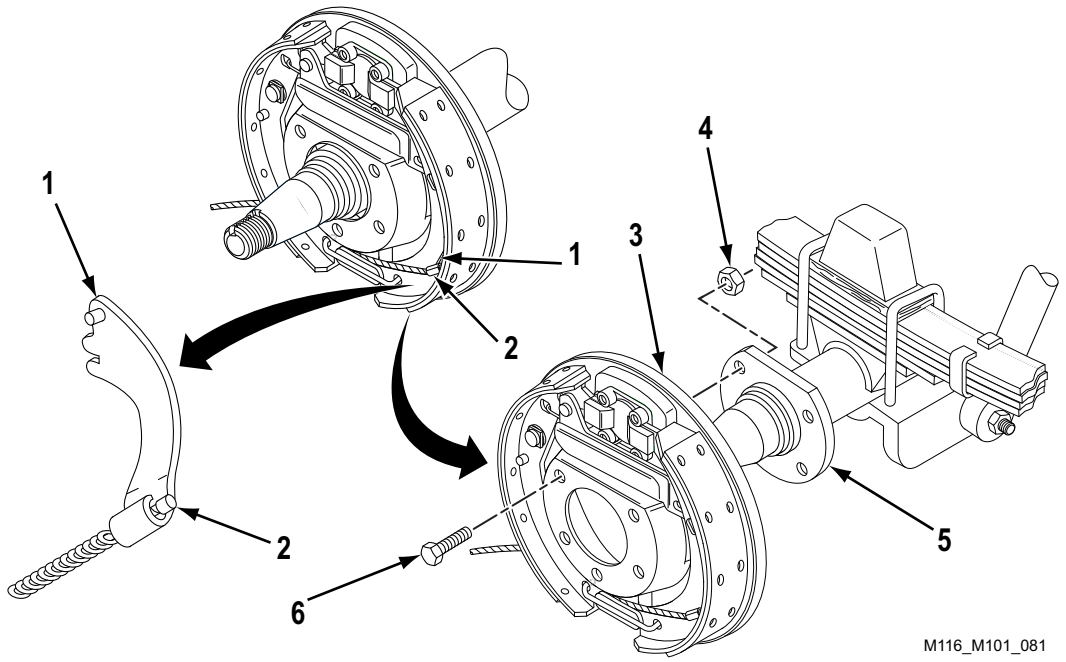

Figure 1. Backing Plate Removal.

END OF TASK

DISASSEMBLY

1. Remove two spring clips (Figure 2, Item 9) and springs (Figure 2, Item 13).
2. Remove cap (Figure 2, Item 5), nut (Figure 2, Item 15), washer (Figure 2, Item 16), pin (Figure 2, Item 8), and brake lever (Figure 2, Item 7).
3. Remove clip (Figure 2, Item 11), washer (Figure 2, Item 12), and brake shoe (Figure 2, Item 1). Discard clip (Figure 2, Item 11).
4. Remove clip (Figure 2, Item 2) and strut (Figure 2, Item 10). Discard clip (Figure 2, Item 2).
5. Remove clip (Figure 2, Item 18), washer (Figure 2, Item 17), and brake shoe (Figure 2, Item 6). Discard clip (Figure 2, Item 18).
6. Remove four cap screws (Figure 2, Item 4) and brake guide (Figure 2, Item 14).
7. Remove two brake guide washers (Figure 2, Item 3).

DISASSEMBLY - Continued

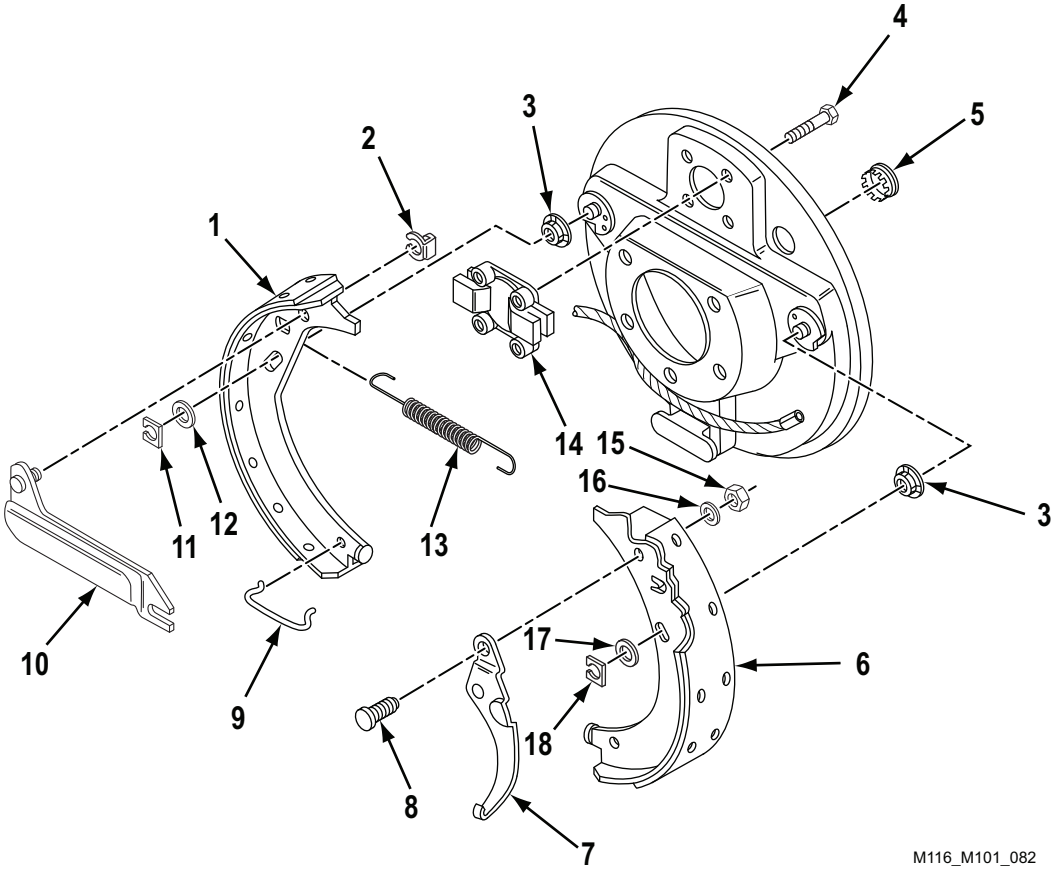

Figure 2. Service Brake Disassembly.

END OF TASK

CLEANING AND INSPECTION

WARNING


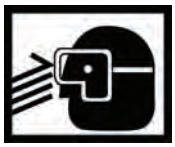

- Solvent cleaning compound MIL-PRF-680 may be irritating to the eyes and skin. Use protective gloves and goggles. First aid for skin contact: remove contaminated clothing. Wash skin thoroughly with soap and water. First aid for eye contact: flush with water until irritation subsides. If symptoms persist, seek medical attention. Failure to comply may result in death or injury to personnel. Seek medical attention in the event of an injury.
- Use solvent cleaning compound MIL-PRF-680 in a well ventilated area. Use respirator as needed. Accidental ingestion can cause irritation of digestive tract and respiratory tract. May cause lung and central nervous system damage. Can be fatal if swallowed. Inhalation of high/massive concentrations can cause coma or be fatal. First aid for ingestion: do not induce vomiting. Seek immediate medical attention. First aid for inhalation: move to fresh air. If not breathing, provide artificial respiration. If symptoms persist, seek medical attention. Failure to comply may result in death or injury to personnel. Seek medical attention in the event of an injury.
- MIL-PRF-680 solvent is combustible; DO NOT use or store near heat, sparks, flame, or other ignition sources. Use mechanical ventilation whenever product is used in a confined space, heated above ambient temperatures, or agitated. Keep container sealed when not in use. Failure to comply may result in death or injury to personnel. Seek medical attention in the event of an injury.
- Improper cleaning methods and use of unauthorized cleaning liquids or solvents can injure personnel and damage equipment. Failure to comply may result in death or injury to personnel. Seek medical attention in the event of an injury.
- Rags saturated with solvent cleaning compound must be disposed of IAW authorized facility procedures. Failure to comply may result in death or injury to personnel. Seek medical attention in the event of an injury.
- Solvent cleaning compound MIL-PRF-680 is toxic and flammable. Always wear protective goggles and gloves, and use only in a well-ventilated area. Avoid contact with skin, eyes, and clothes, and DO NOT breathe vapors. DO NOT use near open flame or excessive heat. Failure to comply may result in death or injury to personnel. Seek medical attention in the event of an injury.

CLEANING AND INSPECTION - Continued

1. Clean all removed components with cleaning solvent and soft cloth rag and allow to dry.
2. Inspect backing plate for cracks, breaks, corrosion, or other damage. Replace backing plate if damaged.

WARNING

If one brake shoe is being replaced, replace all brake shoes on axle. The combination of old brake shoes with new brake shoes will cause uneven braking. Failure to comply may result in death or injury to personnel. Seek medical attention in the event of an injury.

3. Inspect brake shoe linings for cracks or grease. Measure lining thickness. Lining thickness must be at least 1/8 in (3.18 mm). Replace brake shoes if damaged, grease soaked, or worn.
4. Inspect parking brake lever, strut, and brake guide for cracks or wear.
5. Inspect all other removed components for cracks, breaks, distortion, corrosion, or other damage. Replace any damaged components.

END OF TASK

ASSEMBLY

1. Install two brake guide washers (Figure 3, Item 3).
2. Install brake guide (Figure 3, Item 14) and four cap screws (Figure 3, Item 4).
3. Install brake shoe (Figure 3, Item 6), washer (Figure 3, Item 17), and new clip (Figure 3, Item 18).
4. Install strut (Figure 3, Item 10) and new clip (Figure 3, Item 2).
5. Install brake shoe (Figure 3, Item 1), washer (Figure 3, Item 12), and new clip (Figure 3, Item 11).
6. Install brake lever (Figure 3, Item 7), pin (Figure 3, Item 8), washer (Figure 3, Item 16), nut (Figure 3, Item 15), and cap (Figure 3, Item 5).
7. Install two springs (Figure 3, Item 13) and spring clips (Figure 3, Item 9).

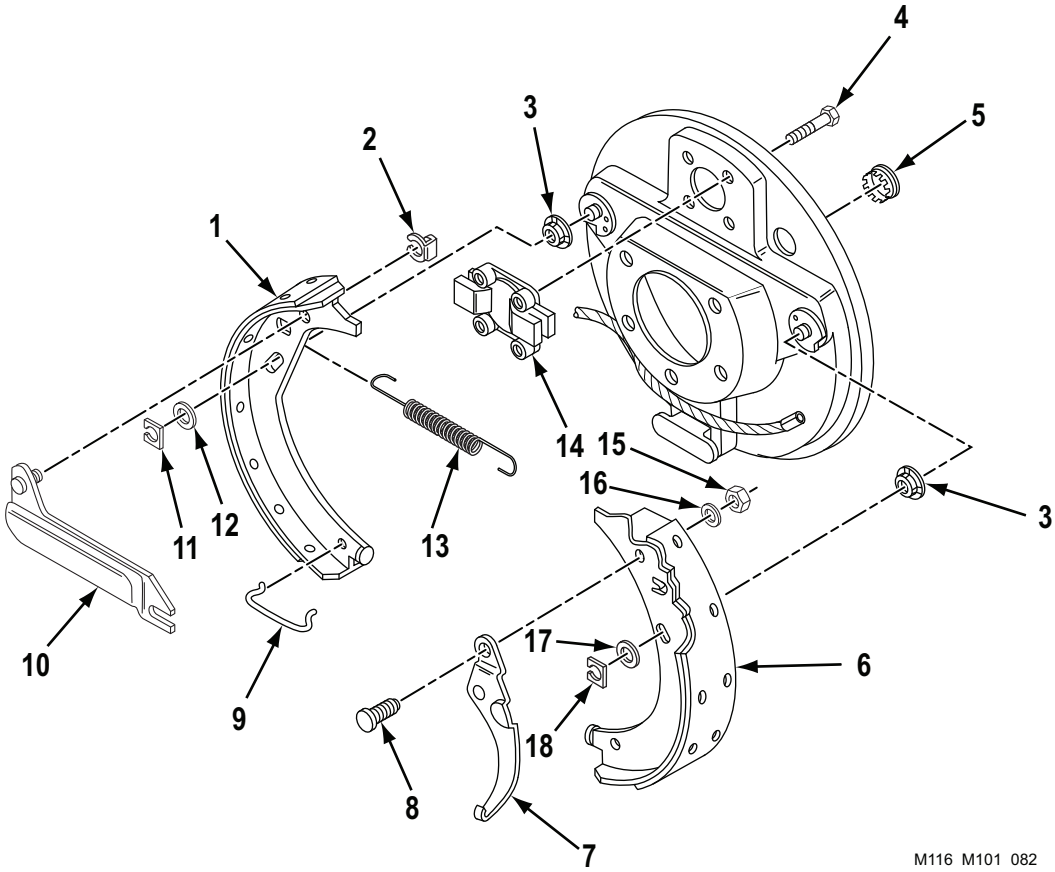

Figure 3. Service Brake Assembly.

END OF TASK

INSTALLATION

1. Install backing plate (Figure 4, Item 3), five cap screws (Figure 4, Item 6), and nuts (Figure 4, Item 4) on axle (Figure 4, Item 5).
2. Route swaged sleeve (Figure 4, Item 2) through backing plate (Figure 4, Item 3).
3. Pull spring away from swaged sleeve (Figure 4, Item 2) and hook swaged sleeve (Figure 4, Item 2) on parking brake lever (Figure 4, Item 1).

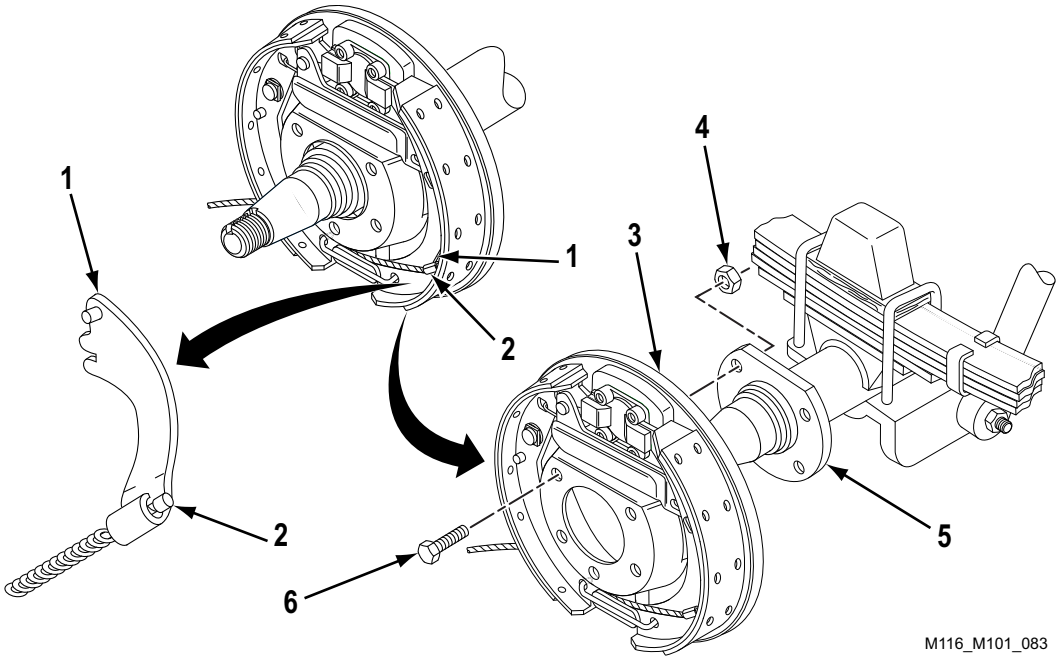

Figure 4. Service Brake Installation.

END OF TASK

FOLLOW ON TASK

1. Install hub and brake drum (WP 0055).
2. Adjust service brakes (WP 0048).
3. Adjust handbrakes (WP 0043).

END OF TASK

END OF WORK PACKAGE

FIELD MAINTENANCE
SERVICE BRAKE ADJUSTMENT (ALL EXCEPT M101A1 AND M116A1)

INITIAL SETUP:

Tools and Special Tools
Tool Kit, General Mechanic's
(WP 0115, Table 1, Item 1)

References
WP 0005
WP 0043

ADJUSTMENT

WARNING


Trailer must be supported by blocking or support stands placed under axle or frame throughout maintenance procedure. Failure to comply may result in death or injury to personnel. Seek medical attention in the event of an injury.

NOTE

The procedure for adjusting service brake is the same for roadside and curbside.

1. Apply handbrake (WP 0005). Chock wheel assembly (Figure 1, Item 1) on opposite side of service brake being adjusted.
2. Raise axle (Figure 1, Item 2) on side being adjusted until wheel assembly (Figure 1, Item 1) is off the ground.

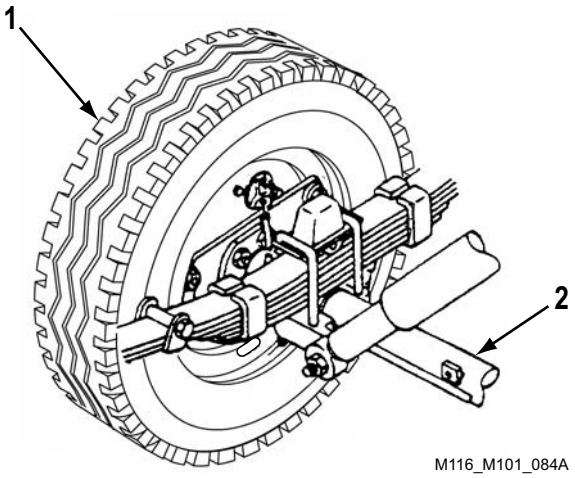

Figure 1. Raising Wheel Assembly.

ADJUSTMENT - Continued

3. Release handbrake on side being adjusted (WP 0005).
4. Remove cover (Figure 2, Item 3) from backing plate (Figure 2, Item 5).
5. While turning wheel assembly (Figure 2, Item 1), turn adjusting screw (Figure 2, Item 4) until brakes drag lightly. Then turn adjusting screw (Figure 2, Item 4) in opposite direction one click.
6. Install cover (Figure 2, Item 3) in backing plate (Figure 2, Item 5).
7. Lower axle (Figure 2, Item 2). Apply handbrake on adjusted side (WP 0005).
8. Remove chock from wheel assembly (Figure 2, Item 1).

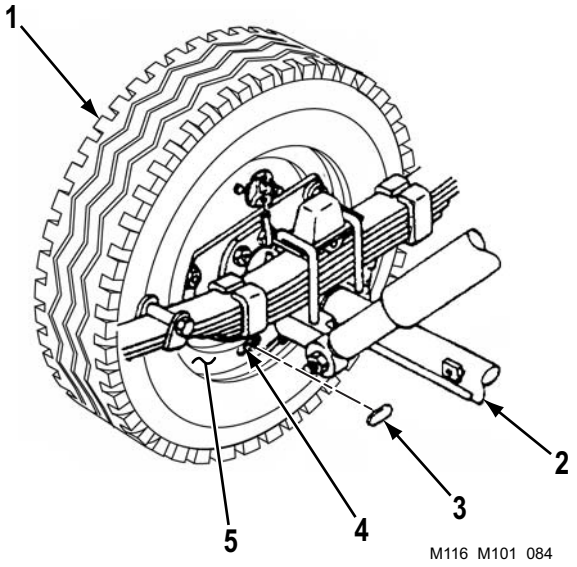

Figure 2. Service Brake Adjustment.

END OF TASK

FOLLOW ON TASK

Adjust handbrakes (WP 0043).

END OF TASK

END OF WORK PACKAGE

FIELD MAINTENANCE
SERVICE BRAKE ADJUSTMENT (M101A1 AND M116A1)

INITIAL SETUP:

Tools and Special Tools
Tool Kit, General Mechanic's
(WP 0115, Table 1, Item 1)

References
WP 0005
WP 0043

ADJUSTMENT

WARNING


Trailer must be supported by blocking or support stands placed under axle or frame throughout maintenance procedure. Failure to comply may result in death or injury to personnel. Seek medical attention in the event of an injury.

NOTE

The procedure for adjusting the service brake is the same for roadside and curbside.

1. Apply handbrakes (WP 0005). Chock wheel assembly (Figure 1, Item 1) on opposite side of service brake being adjusted.
2. Raise axle (Figure 1, Item 2) on side being adjusted until wheel assembly (Figure 1, Item 1) is off the ground.

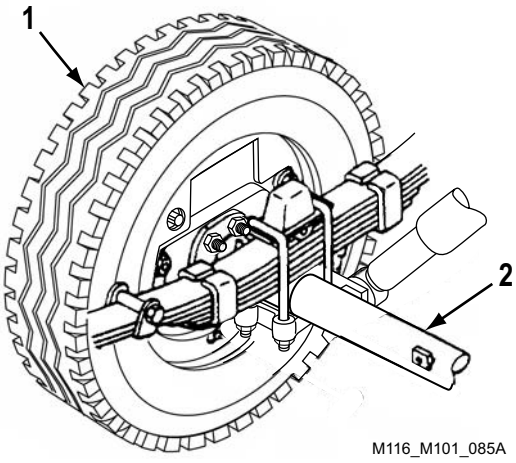

Figure 1. Raising Wheel Assembly.

ADJUSTMENT - Continued

3. Release handbrake on side being adjusted (WP 0005).
4. While turning wheel assembly (Figure 2, Item 2), turn cam stud (Figure 2, Item 6) until brake drags. Turn cam stud (Figure 2, Item 6) in opposite direction just enough to remove drag.
5. Repeat Step 4 for other cam stud (Figure 2, Item 4).
6. Remove button plug (Figure 2, Item 3).
7. Loosen nut (Figure 2, Item 1) and turn eccentric pin (Figure 2, Item 7) until it binds. Tighten nut (Figure 2, Item 1).
8. Install button plug (Figure 2, Item 3).
9. Lower axle (Figure 2, Item 5). Apply handbrake on adjusted side (WP 0005).
10. Remove chock from wheel assembly (Figure 2, Item 2).

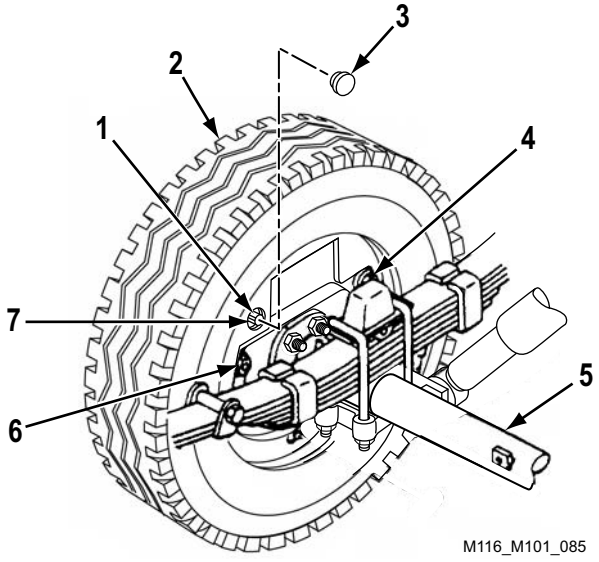

Figure 2. Service Brake Adjustment.

END OF TASK

FOLLOW ON TASK

Adjust handbrakes (WP 0043).

END OF TASK

END OF WORK PACKAGE

FIELD MAINTENANCE
WHEEL CYLINDER MAINTENANCE (M101 SERIES IF EQUIPPED)

INITIAL SETUP:

Tools and Special Tools
Tool Kit, General Mechanic's
(WP 0115, Table 1, Item 1)
Wrench, Torque
(WP 0115, Table 1, Item 2)

Materials/Parts
Lockwasher
(WP 0090, Figure 9, Item 4)
Degreasing solvent

Materials/Parts (cont.)
(WP 0114, Table 1, Item 9)
Rag, wiping
(WP 0114, Table 1, Item 24)

References
WP 0043
WP 0048
WP 0053

Equipment Condition
Hub and brake drum
removed (WP 0055)

WARNING


Accidental or intentional introduction of liquid contaminants into the environment is a violation of state, federal, and military regulations. Refer to local environmental office for information concerning storage, use, and disposal of these liquids. Failure to comply may cause damage to environment and health of personnel. Seek medical attention in the event of an injury.

REMOVAL

NOTE

- Use a suitable container to catch any draining brake fluid. Make sure all spills are cleaned up. Refer to local procedures for responding to fluid spills and disposal of clean up materials. Refer to local procedures for storage and disposal of drained fluids.
- If removing or replacing wheel cylinder, do Steps 1 and 2 only. If removing or replacing bleeder valve only, do Step 3 only.

1. Disconnect hydraulic brake tube assembly (Figure 1, Item 1) at inlet to wheel cylinder (Figure 1, Item 6).
2. Remove bolt (Figure 1, Item 4), lockwasher (Figure 1, Item 3), wheel cylinder (Figure 1, Item 6), and link (Figure 1, Item 7) from backing plate (Figure 1, Item 8). Discard lockwasher (Figure 1, Item 3).
3. Remove bleeder valve (Figure 1, Item 2) from wheel cylinder (Figure 1, Item 6).

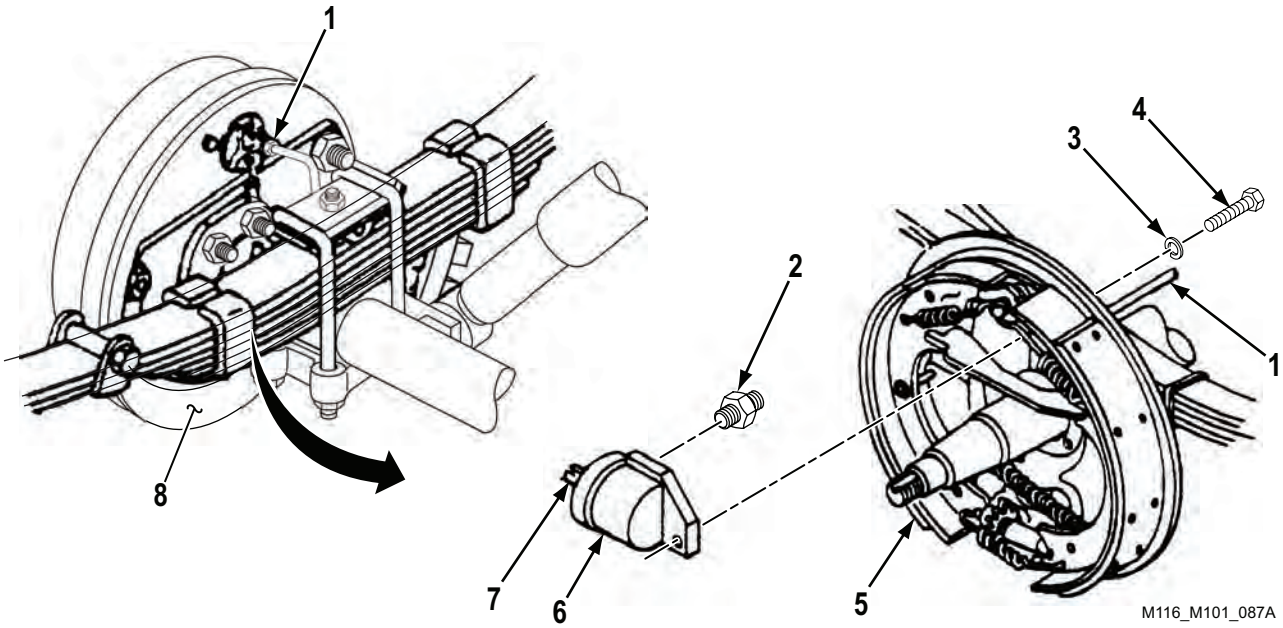

Figure 1. Wheel Cylinder Removal.

END OF TASK

CLEANING AND INSPECTION

WARNING


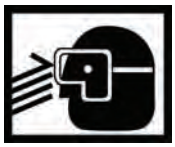

- Solvent cleaning compound MIL-PRF-680 may be irritating to the eyes and skin. Use protective gloves and goggles. First aid for skin contact: remove contaminated clothing. Wash skin thoroughly with soap and water. First aid for eye contact: flush with water until irritation subsides. If symptoms persist, seek medical attention. Failure to comply may result in death or injury to personnel. Seek medical attention in the event of an injury.
- Use solvent cleaning compound MIL-PRF-680 in a well ventilated area. Use respirator as needed. Accidental ingestion can cause irritation of digestive tract and respiratory tract. May cause lung and central nervous system damage. Can be fatal if swallowed. Inhalation of high/massive concentrations can cause coma or be fatal. First aid for ingestion: do not induce vomiting. Seek immediate medical attention. First aid for inhalation: move to fresh air. If not breathing, provide artificial respiration. If symptoms persist, seek medical attention. Failure to comply may result in death or injury to personnel. Seek medical attention in the event of an injury.
- MIL-PRF-680 solvent is combustible; DO NOT use or store near heat, sparks, flame, or other ignition sources. Use mechanical ventilation whenever product is used in a confined space, heated above ambient temperatures, or agitated. Keep container sealed when not in use. Failure to comply may result in death or injury to personnel. Seek medical attention in the event of an injury.
- Improper cleaning methods and use of unauthorized cleaning liquids or solvents can injure personnel and damage equipment. Failure to comply may result in death or injury to personnel. Seek medical attention in the event of an injury.
- Rags saturated with solvent cleaning compound must be disposed of IAW authorized facility procedures. Failure to comply may result in death or injury to personnel. Seek medical attention in the event of an injury.
- Solvent cleaning compound MIL-PRF-680 is toxic and flammable. Always wear protective goggles and gloves, and use only in a well-ventilated area. Avoid contact with skin, eyes, and clothes, and DO NOT breathe vapors. DO NOT use near open flame or excessive heat. Failure to comply may result in death or injury to personnel. Seek medical attention in the event of an injury.

1. Clean all removed components, except wheel cylinder, with cleaning solvent and soft cloth rag and allow to dry. Wipe wheel cylinder with a clean soft cloth rag.
2. Inspect components for cracks, breaks, corrosion, or damaged threads. Replace if damaged.

END OF TASK

INSTALLATION

1. If removed, install bleeder valve (Figure 2, Item 2) on wheel cylinder (Figure 2, Item 6).

CAUTION

Make sure boot of wheel cylinder is dry before installing wheel cylinder. Failure to follow this caution may cause brake fluid to damage brake shoe linings. Failure to comply may result in damage to, or destruction of, equipment or mission.

2. Assemble wheel cylinder (Figure 2, Item 6) and link (Figure 2, Item 7) at backing plate (Figure 2, Item 8), with link (Figure 2, Item 7) engaged in primary brake shoe (Figure 2, Item 5). Install new lockwasher (Figure 2, Item 3) and bolt (Figure 2, Item 4) on wheel cylinder (Figure 2, Item 6). Torque bolt (Figure 2, Item 4) between 130 – 280 lb-in (15 – 32 N•m).
3. Connect hydraulic brake tube assembly (Figure 2, Item 1) to inlet of wheel cylinder (Figure 2, Item 6).

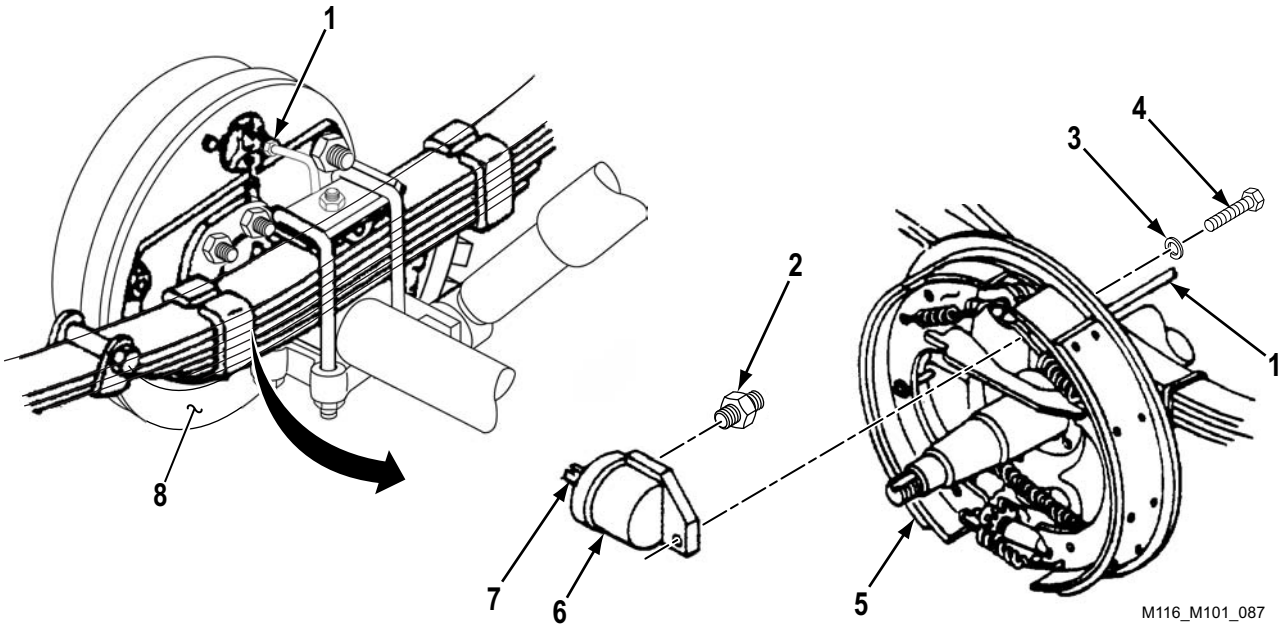

Figure 2. Wheel Cylinder Replacement.

END OF TASK

FOLLOW ON TASK

1. Install hub and brake drum (WP 0055).
2. Bleed hydraulic brake system (WP 0053).
3. Adjust service brake (WP 0048).
4. Adjust handbrakes (WP 0043).

END OF TASK

END OF WORK PACKAGE

FIELD MAINTENANCE
HYDRAULIC BRAKE ACTUATOR ASSEMBLY REPLACEMENT

INITIAL SETUP:

Tools and Special Tools
- Tool Kit, General Mechanic's (WP 0115, Table 1, Item 1)
- Wrench, Torque (WP 0115, Table 1, Item 2)
- Wrench, Torque (WP 0115, Table 1, Item 3)

Materials/Parts
- Eight self-locking nuts (WP 0091, Figure 10, Item 2)
- Five self-locking nuts (WP 0091, Figure 10, Item 13)
- Self-locking nut (WP 0091, Figure 10, Item 14)
- Self-locking nut (WP 0091, Figure 10, Item 16)
- Gasket (WP 0091, Figure 10, Item 35)
- Gasket (WP 0091, Figure 10, Item 38)
- Four self-locking nuts (WP 0097, Figure 16, Item 11)
- Self-locking nut (WP 0097, Figure 16, Item 13)

Materials/Parts (cont.)
- Self-locking nut (WP 0097, Figure 16, Item 15)
- Four lockwashers (WP 0097, Figure 16, Item 27)
- Brush, wire (WP 0114, Table 1, Item 4)
- Detergent, general purpose (WP 0114, Table 1, Item 8)
- Degreasing solvent (WP 0114, Table 1, Item 9)
- Rag, wiping (WP 0114, Table 1, Item 24)

References
- WP 0007
- WP 0053
- WP 0077

Equipment Condition
- Handbrakes applied (WP 0005)

WARNING


- When performing maintenance on brake system, make sure wheels are securely chocked. Failure to comply may cause trailer to roll, resulting in death or injury to personnel. Seek medical attention in the event of an injury.
- Trailer must be supported by blocking or support stands placed under axle or frame throughout maintenance procedure. Failure to comply may result in death or injury to personnel. Seek medical attention in the event of an injury.

REMOVAL

1. Place lifting device under drawbar (Figure 1, Item 12) at each front corner of frame.

WARNING


Accidental or intentional introduction of liquid contaminants into the environment is a violation of state, federal, and military regulations. Refer to local environmental office for information concerning storage, use, and disposal of these liquids. Failure to comply may cause damage to environment and health of personnel. Seek medical attention in the event of an injury.

NOTE

Use a suitable container to catch any draining brake fluid. Make sure all spills are cleaned up. Refer to local procedures for responding to fluid spills and disposal of clean up materials. Refer to local procedures for storage and disposal of drained fluids.

2. Remove self-locking nut (Figure 1, Item 2) and loop clamp (Figure 1, Item 3), with intervehicular cable (Figure 1, Item 7) from hydraulic brake actuator assembly (Figure 1, Item 1). Discard self-locking nut (Figure 1, Item 2).
3. Disconnect hydraulic brake front tube assembly (Figure 1, Item 6) from connector (Figure 1, Item 5) at master cylinder (Figure 1, Item 4).
4. Remove self-locking nut (Figure 1, Item 16), cap screw (Figure 1, Item 8), and safety chain (Figure 1, Item 9) from each of two drawbars (Figure 1, Item 12). Discard self-locking nuts (Figure 1, Item 16).

NOTE

Bracket and adjustable front support leg is a one-piece welded assembly.

5. Remove self-locking nut (Figure 1, Item 15), cap screw (Figure 1, Item 17), and bracket with front support leg (Figure 1, Item 13) drawbar bracket assembly (Figure 1, Item 14). Discard self-locking nut (Figure 1, Item 15).
6. Remove two screws (Figure 1, Item 11) and loosen hydraulic line (Figure 1, Item 10) from curbside drawbar (Figure 1, Item 12).

REMOVAL - Continued

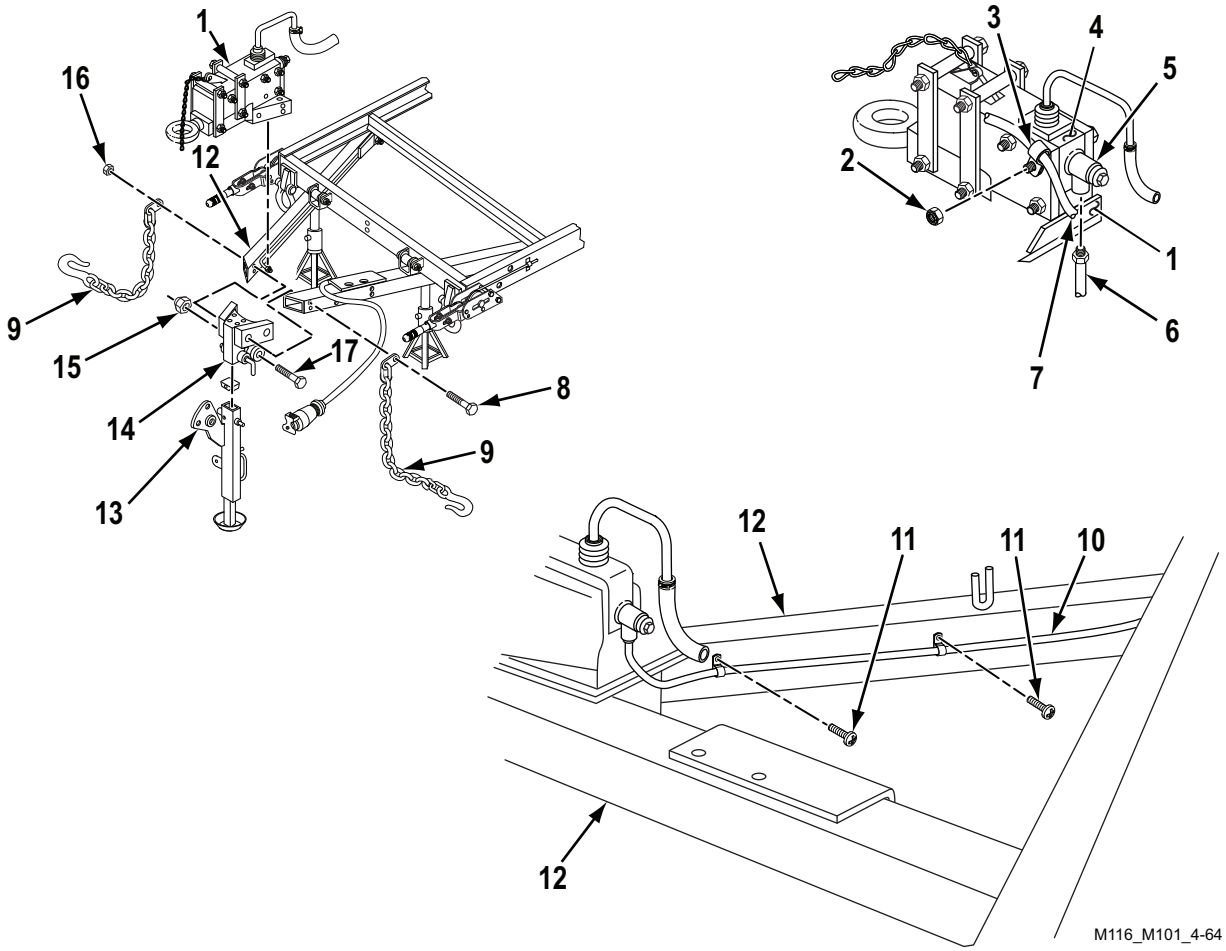

Figure 1. Hydraulic Brake Lines Removal.

7. Remove fluid passage bolt (Figure 2, Item 5), washer (Figure 2, Item 4), connector (Figure 2, Item 3), and washer (Figure 2, Item 2) from master cylinder (Figure 2, Item 1).

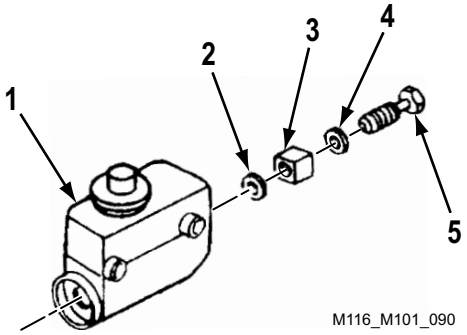

Figure 2. Fluid Passage Bolt Removal.

REMOVAL - Continued

8. Remove four self-locking nuts (Figure 3, Item 3) and cap screws (Figure 4, Item 5) from hydraulic brake actuator assembly (Figure 3, Item 1), drawbar bracket assembly (Figure 3, Item 10), and two drawbars (Figure 3, Item 4). Discard self-locking nuts (Figure 3, Item 3).
9. Remove drawbar bracket assembly (Figure 3, Item 10), with hydraulic brake actuator assembly (Figure 3, Item 1), from two drawbars (Figure 3, Item 4).
10. Remove two nuts (Figure 3, Item 7), lockwashers (Figure 3, Item 6), and cap screws (Figure 3, Item 2) from drawbar bracket assembly (Figure 3, Item 10) and hydraulic brake actuator assembly (Figure 3, Item 1). Discard lockwashers (Figure 3, Item 6).
11. Remove two cap screws (Figure 3, Item 9) and lockwashers (Figure 3, Item 8) from drawbar bracket assembly (Figure 3, Item 10), and separate hydraulic brake actuator assembly (Figure 3, Item 1) from drawbar bracket assembly (Figure 3, Item 10). Discard lockwashers (Figure 3, Item 8).

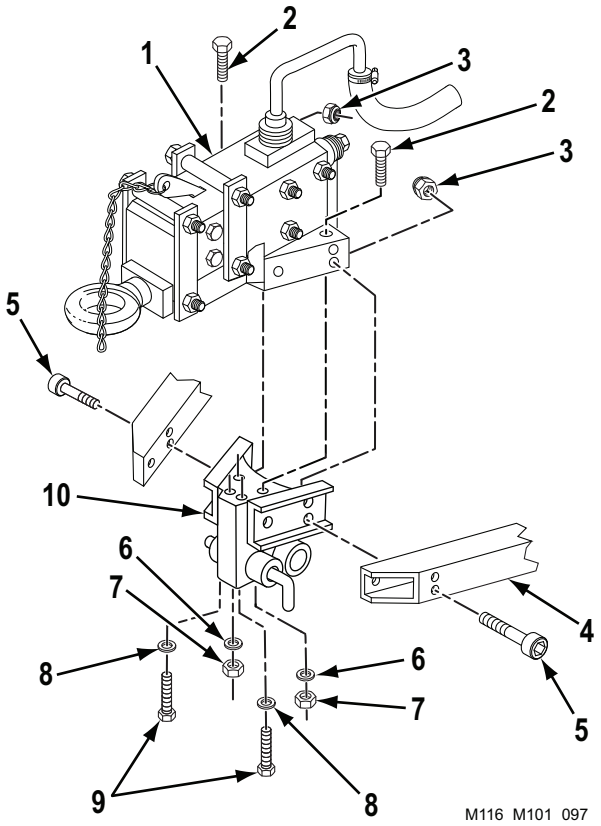

Figure 3. Hydraulic Brake Actuator Assembly Removal.

END OF TASK

DISASSEMBLY

1. Remove self-locking nut (Figure 4, Item 7) and cap screw (Figure 4, Item 1) from channel (Figure 4, Item 5). Discard self-locking nut (Figure 4, Item 7).

NOTE

On newer-model trailers, spacers are welded to inside of channel.

2. Remove two self-locking nuts (Figure 4, Item 6), cap screws (Figure 4, Item 2), four spacers (Figure 4, Item 3), and master cylinder (Figure 4, Item 4) from channel (Figure 4, Item 5). Discard self-locking nuts (Figure 4, Item 6).

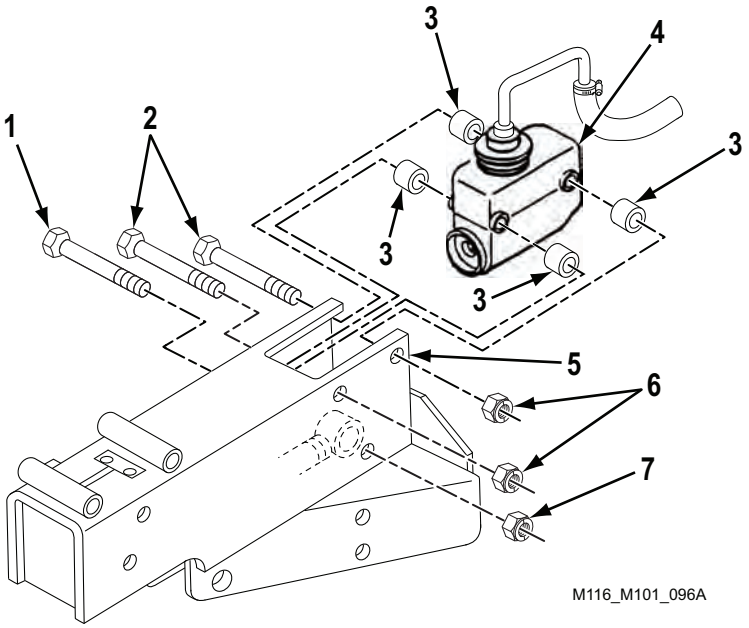

Figure 4. Master Cylinder Disassembly.

DISASSEMBLY - Continued

3. Remove eight self-locking nuts (Figure 5, Item 1), four links (Figure 5, Item 2) and shafts (Figure 5, Item 3), eight bearings (Figure 5, Item 4), and drawbar coupler (Figure 5, Item 11) from channel (Figure 5, Item 5). Discard self-locking nuts (Figure 5, Item 1).
4. Remove self-locking nut (Figure 5, Item 12), cap screw (Figure 5, Item 10), and shock absorber (Figure 5, Item 8) from drawbar coupler (Figure 5, Item 11). Discard self-locking nut (Figure 5, Item 12).

NOTE

Boot may be in master cylinder.

5. Remove self-locking nut (Figure 5, Item 13) and socket head screw (Figure 5, Item 9) from drawbar coupler (Figure 5, Item 11) and pushrod (Figure 5, Item 16). Remove washer (Figure 5, Item 14), spring (Figure 5, Item 15), pushrod (Figure 5, Item 16), and boot (Figure 5, Item 7) from drawbar coupler (Figure 5, Item 11). Discard self-locking nut (Figure 5, Item 13).
6. Remove self-locking nut (Figure 5, Item 6), cap screw (Figure 5, Item 19), and breakaway lever (Figure 5, Item 17), with chain (Figure 5, Item 18) from channel (Figure 5, Item 5). Discard self-locking nut (Figure 5, Item 6).
7. If damaged, remove chain (Figure 5, Item 18) from breakaway lever (Figure 5, Item 17).

DISASSEMBLY - Continued

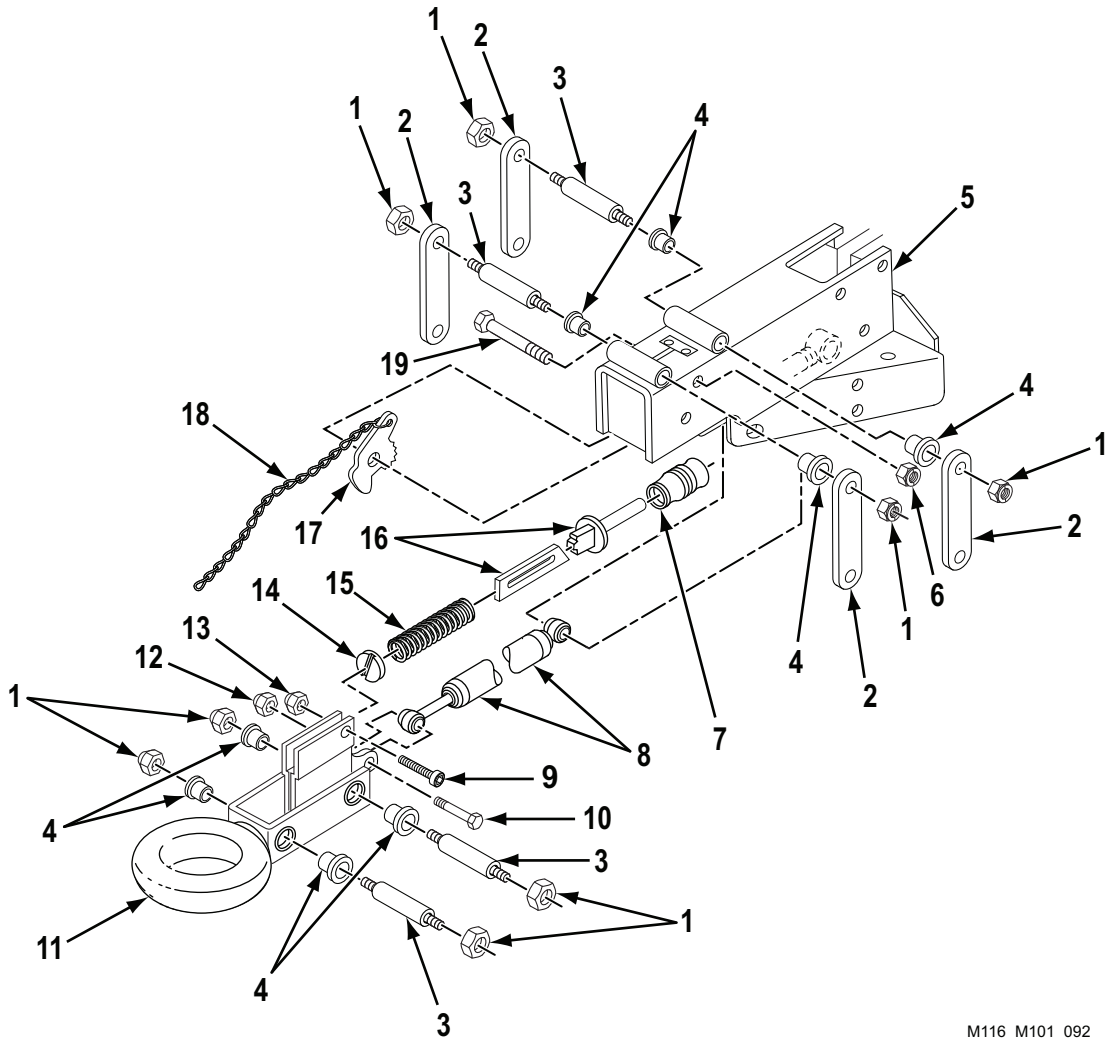

Figure 5. Channel and Drawbar Coupler Disassembly.

DISASSEMBLY - Continued

NOTE

For trailers with master cylinder cap, do Step 8. For trailers with drain hose, do Steps 9 and 10.

8. Remove cap (Figure 6, Item 2) and gasket (Figure 6, Item 3) from master cylinder (Figure 6, Item 1). Discard gasket (Figure 6, Item 3).
9. Loosen clamp (Figure 6, Item 6) and remove drain hose (Figure 6, Item 7) from vent tube (Figure 6, Item 5).
10. Remove vent tube (Figure 6, Item 5), filler cap (Figure 6, Item 4), baffle (Figure 6, Item 9), and gasket (Figure 6, Item 8) from master cylinder (Figure 6, Item 1). Discard gasket (Figure 6, Item 8).

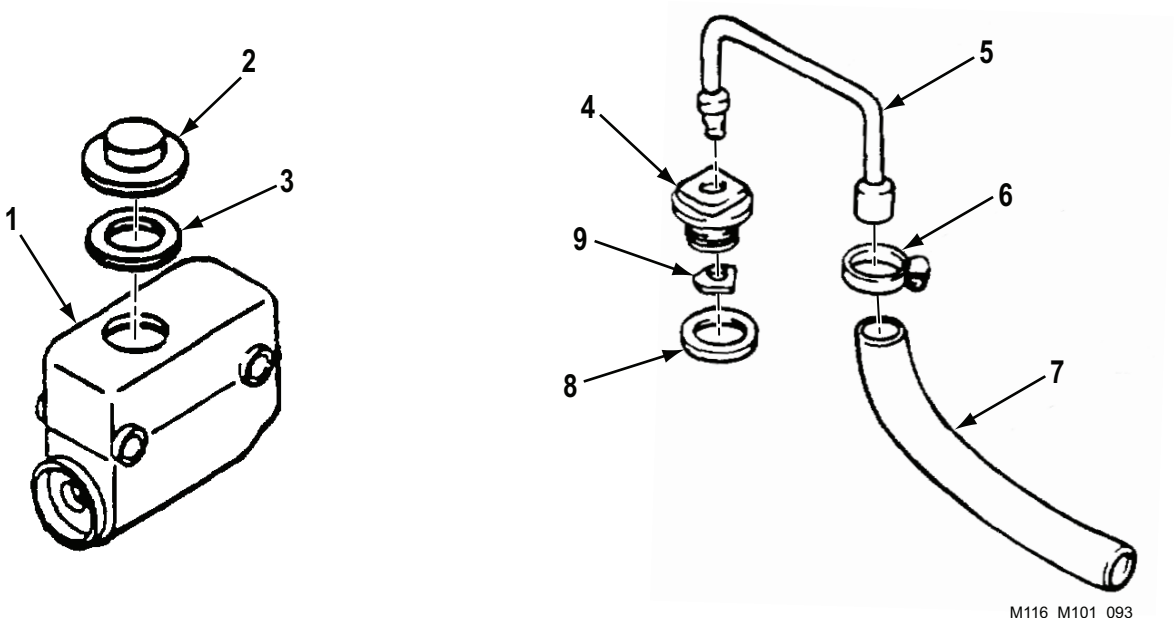

Figure 6. Master Cylinder Cap or Drain Hose Disassembly.

END OF TASK

CLEANING AND INSPECTION

WARNING


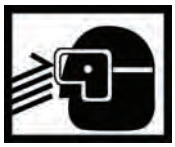

- Solvent cleaning compound MIL-PRF-680 may be irritating to the eyes and skin. Use protective gloves and goggles. First aid for skin contact: remove contaminated clothing. Wash skin thoroughly with soap and water. First aid for eye contact: flush with water until irritation subsides. If symptoms persist, seek medical attention. Failure to comply may result in death or injury to personnel. Seek medical attention in the event of an injury.
- Use solvent cleaning compound MIL-PRF-680 in a well ventilated area. Use respirator as needed. Accidental ingestion can cause irritation of digestive tract and respiratory tract. May cause lung and central nervous system damage. Can be fatal if swallowed. Inhalation of high/massive concentrations can cause coma or be fatal. First aid for ingestion: do not induce vomiting. Seek immediate medical attention. First aid for inhalation: move to fresh air. If not breathing, provide artificial respiration. If symptoms persist, seek medical attention. Failure to comply may result in death or injury to personnel. Seek medical attention in the event of an injury.
- MIL-PRF-680 solvent is combustible; DO NOT use or store near heat, sparks, flame, or other ignition sources. Use mechanical ventilation whenever product is used in a confined space, heated above ambient temperatures, or agitated. Keep container sealed when not in use. Failure to comply may result in death or injury to personnel. Seek medical attention in the event of an injury.
- Improper cleaning methods and use of unauthorized cleaning liquids or solvents can injure personnel and damage equipment. Failure to comply may result in death or injury to personnel. Seek medical attention in the event of an injury.
- Rags saturated with solvent cleaning compound must be disposed of IAW authorized facility procedures. Failure to comply may result in death or injury to personnel. Seek medical attention in the event of an injury.
- Solvent cleaning compound MIL-PRF-680 is toxic and flammable. Always wear protective goggles and gloves, and use only in a well-ventilated area. Avoid contact with skin, eyes, and clothes, and DO NOT breathe vapors. DO NOT use near open flame or excessive heat. Failure to comply may result in death or injury to personnel. Seek medical attention in the event of an injury.

1. Clean all removed components with cleaning solvent and soft cloth rag and allow to dry. Clean boot with detergent and water.
2. Inspect all removed components for wear, breaks, cracks, damaged welds, corrosion, or other damage. Replace if damaged.
3. Inspect breakaway lever for worn ratchet teeth. Replace if damaged.
4. Remove any corrosion with a wire brush.
5. Inspect for a worn slot in pushrod. Replace pushrod if slot is worn.
6. Inspect for a weak or broken spring. Replace if damaged.
7. Inspect shock absorber for leaks or bad rubber bushings. Replace if damaged.
8. Inspect master cylinder for leaks. Replace if damaged.

CLEANING AND INSPECTION - Continued

9. Inspect channel for broken leaf spring (Figure 7, Item 1). If leaf spring (Figure 7, Item 1) is damaged, replace hydraulic brake actuator assembly (Figure 7, Item 2).

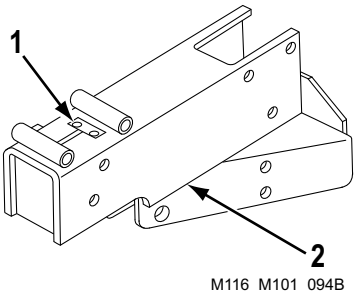

Figure 7. Leaf Spring Inspection.

END OF TASK

ASSEMBLY

NOTE

For trailers with master cylinder cap, do Step 1. For trailers with drain hose, do Steps 2 and 3.

1. Install new gasket (Figure 8, Item 3) and cap (Figure 8, Item 2) on master cylinder (Figure 8, Item 1) and finger-tighten.
2. Install new gasket (Figure 8, Item 8), baffle (Figure 8, Item 9), filler cap (Figure 8, Item 4), and vent tube (Figure 8, Item 5) on master cylinder (Figure 8, Item 1).
3. Install drain hose (Figure 8, Item 7) on vent tube (Figure 8, Item 5) and tighten clamp (Figure 8, Item 6).

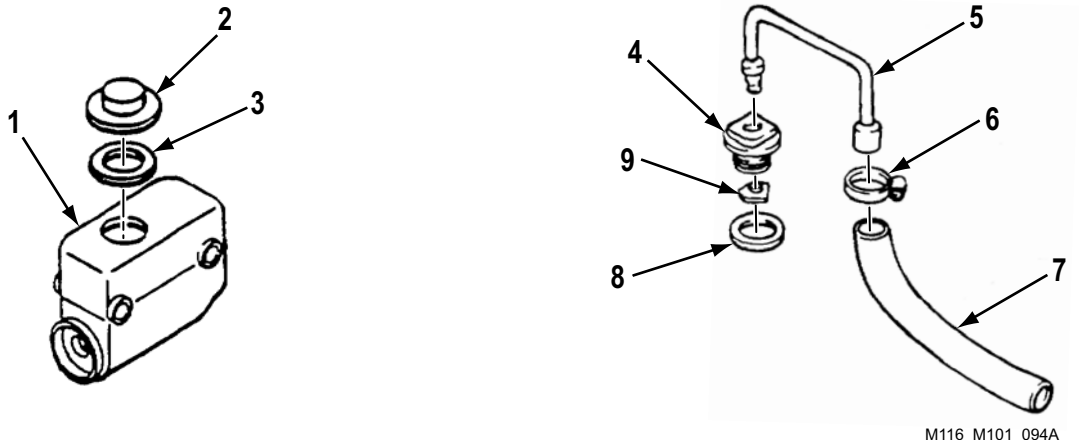

Figure 8. Master Cylinder Cap or Drain Hose Assembly.

4. If removed, install chain (Figure 9, Item 19) on breakaway lever (Figure 9, Item 18).
5. Position breakaway lever (Figure 9, Item 18) in channel (Figure 9, Item 6) with ratchet teeth facing leaf spring (Figure 9, Item 5). Install cap screw (Figure 9, Item 20) and new self-locking nut (Figure 9, Item 7) on breakaway lever (Figure 9, Item 18). Torque self-locking nut (Figure 9, Item 7) between 10 – 15 lb-ft (14 – 20 N•m).

ASSEMBLY - Continued

6. If removed, attach boot (Figure 9, Item 8) to rod end of pushrod (Figure 9, Item 17). Assemble spring (Figure 9, Item 16) and washer (Figure 9, Item 15) on slot end of pushrod (Figure 9, Item 17). Install slot end of pushrod (Figure 9, Item 17) on drawbar coupler (Figure 9, Item 12) with socket head screw (Figure 9, Item 10) and new self-locking nut (Figure 9, Item 14). Torque self-locking nut (Figure 9, Item 14) between 20 – 25 lb-ft (27 – 34 N•m).
7. Install piston rod end of shock absorber (Figure 9, Item 9) on drawbar coupler (Figure 9, Item 12) with cap screw (Figure 9, Item 11) and new self-locking nut (Figure 9, Item 13). Torque self-locking nut (Figure 9, Item 13) between 20 – 25 lb-ft (27 – 34 N•m).
8. Install drawbar coupler (Figure 9, Item 12) on channel (Figure 9, Item 6) with eight bearings (Figure 9, Item 4), four shafts (Figure 9, Item 3) and links (Figure 9, Item 2), and eight new self-locking nuts (Figure 9, Item 1). Torque self-locking nuts (Figure 9, Item 1) between 35 – 40 lb-ft (47 – 54 N•m).

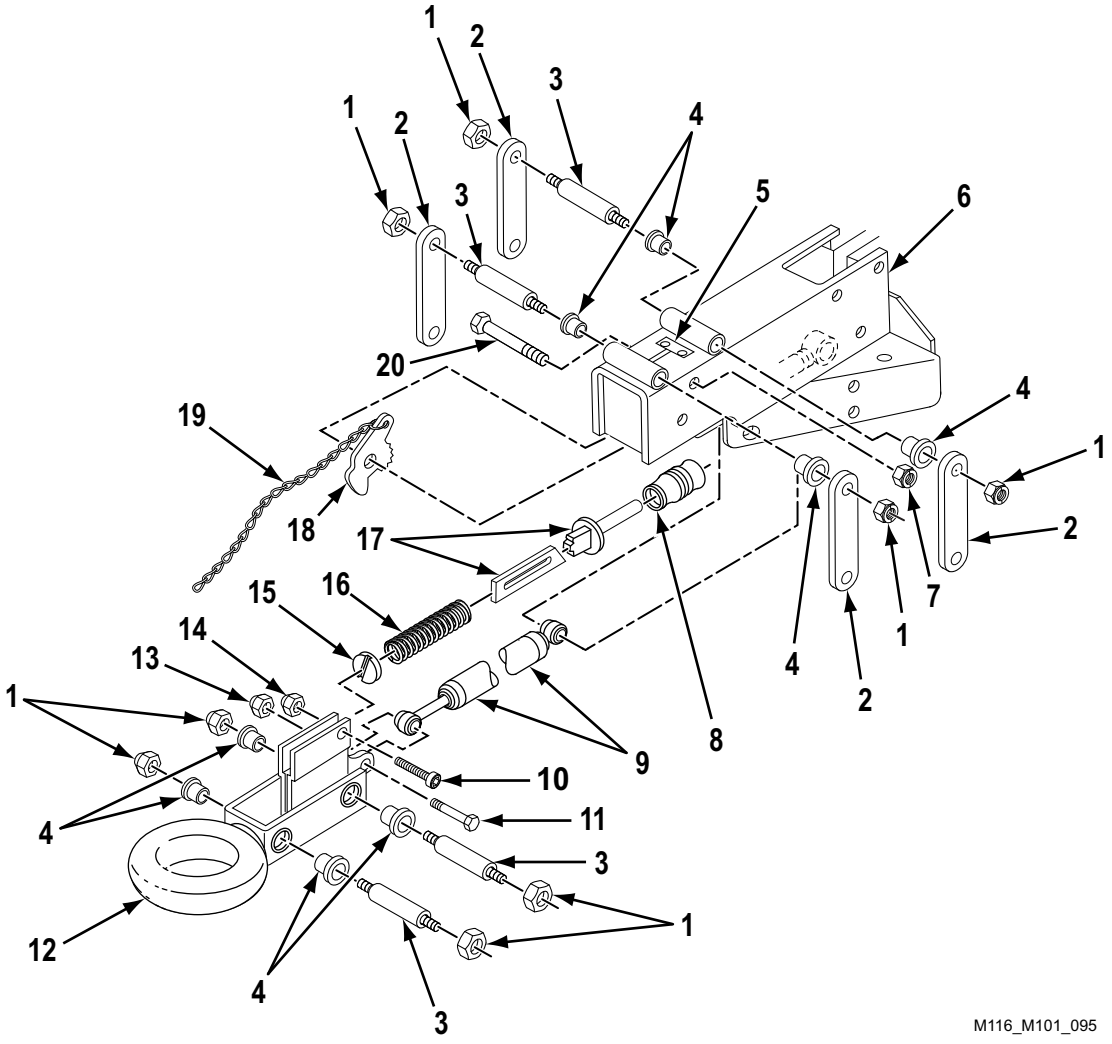

Figure 9. Channel and Drawbar Coupler Assembly.

ASSEMBLY - Continued

9. Install other end of shock absorber (Figure 10, Item 8) on channel (Figure 10, Item 5) with cap screw (Figure 10, Item 1) and new self-locking nut (Figure 10, Item 7). Torque self-locking nut (Figure 10, Item 7) between 20 – 25 lb-ft (27 – 34 N•m).

NOTE

On newer-model trailers, spacers are welded to inside of channel.

10. Position master cylinder (Figure 10, Item 4) and four spacers (Figure 10, Item 3) in channel (Figure 10, Item 5) with boot engaged in pushrod. Install two cap screws (Figure 10, Item 2) and new self-locking nuts (Figure 10, Item 6) on master cylinder (Figure 10, Item 4). Torque self-locking nuts (Figure 10, Item 6) between 10 – 15 lb-ft (14 – 20 N•m).

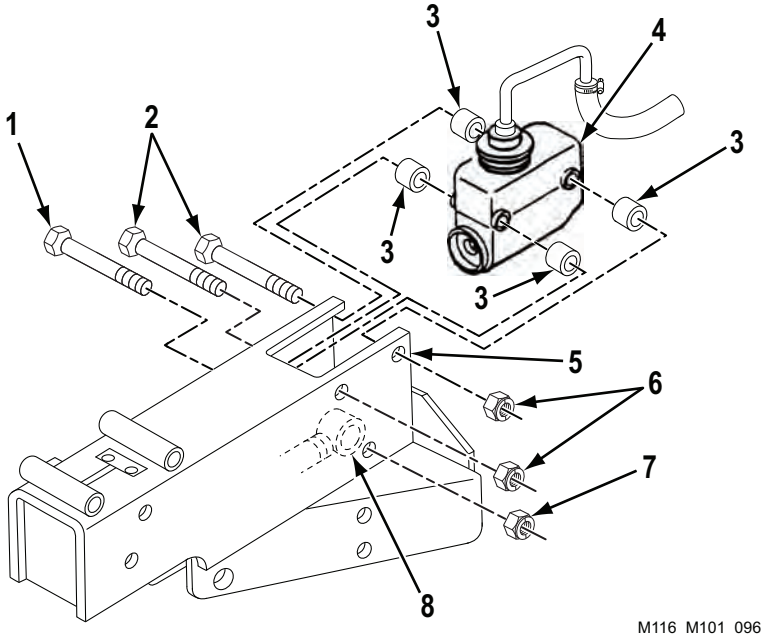

Figure 10. Master Cylinder Assembly.

END OF TASK

INSTALLATION

1. Install hydraulic brake actuator assembly (Figure 11, Item 1) on drawbar bracket assembly (Figure 11, Item 10) with two new lockwashers (Figure 11, Item 8) and cap screws (Figure 11, Item 9). Torque cap screws (Figure 11, Item 9) between 44 – 54 lb-ft (60 – 73 N•m). Install two cap screws (Figure 11, Item 2), new lockwashers (Figure 11, Item 6), and nuts (Figure 11, Item 7) on drawbar bracket assembly (Figure 11, Item 10). Torque nuts (Figure 11, Item 7) between 106 – 120 lb-ft (144 – 163 N•m).
2. Position hydraulic brake actuator assembly (Figure 11, Item 1) with drawbar bracket assembly (Figure 11, Item 10) at two drawbars (Figure 11, Item 4).
3. Install four cap screws (Figure 11, Item 5) and new self-locking nuts (Figure 11, Item 3) on hydraulic brake actuator assembly (Figure 11, Item 1), drawbar bracket assembly (Figure 11, Item 10), and two drawbars (Figure 11, Item 4). Torque self-locking nuts (Figure 11, Item 3) between 44 – 54 lb-ft (60 – 73 N•m).

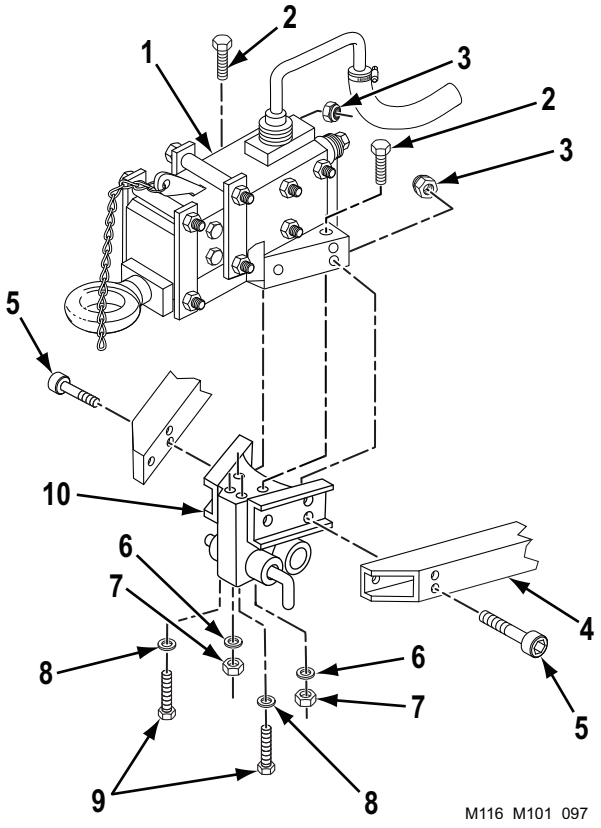

Figure 11. Hydraulic Brake Actuator Assembly Installation.

INSTALLATION - Continued

4. Install washer (Figure 12, Item 2), connector (Figure 12, Item 3), washer (Figure 12, Item 4), and fluid passage bolt (Figure 12, Item 5) on master cylinder (Figure 12, Item 1). Torque fluid passage bolt (Figure 12, Item 5) between 35 – 40 lb-ft (47 – 54 N•m).

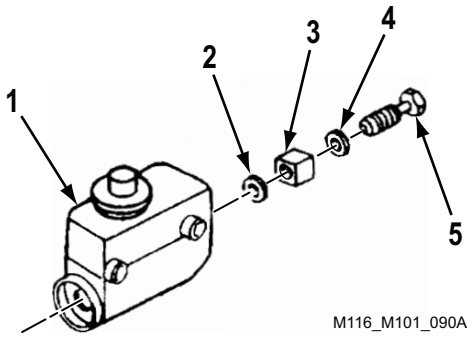

Figure 12. Fluid Passage Bolt Installation.

5. Install hydraulic line (Figure 13, Item 3) on curbside drawbar (Figure 13, Item 1) with two screws (Figure 13, Item 2).

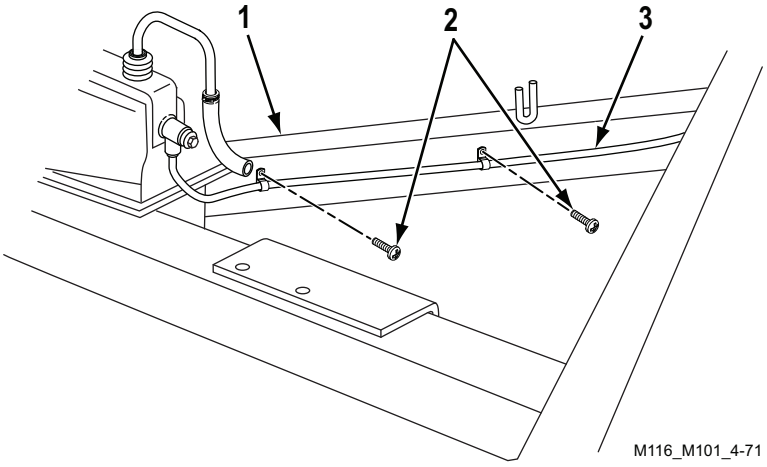

Figure 13. Hydraulic Line to Drawbar Installation.

INSTALLATION - Continued

NOTE

Bracket and adjustable front support leg is a one-piece welded assembly.

6. Install bracket with front support leg (Figure 14, Item 11) on drawbar bracket assembly (Figure 14, Item 12) with cap screw (Figure 14, Item 10) and new self-locking nut (Figure 14, Item 13).
7. Install two safety chains (Figure 14, Item 9) on hydraulic brake actuator assembly (Figure 14, Item 1), drawbar bracket assembly (Figure 14, Item 12), and two drawbars (Figure 14, Item 15) with two cap screws (Figure 14, Item 8) and new self-locking nuts (Figure 14, Item 14). Torque self-locking nut (Figure 14, Item 14) between 165 – 175 lb-ft (224 – 237 N•m).
8. Connect hydraulic brake front tube assembly (Figure 14, Item 6) to connector (Figure 14, Item 5) at master cylinder (Figure 14, Item 4).
9. Install loop clamp (Figure 14, Item 3), with intervehicular cable (Figure 14, Item 7) on hydraulic brake actuator assembly (Figure 14, Item 1) with new self-locking nut (Figure 14, Item 2).
10. Make sure front support leg (Figure 14, Item 11) is locked in lowered position. Remove lifting devices from under two drawbars (Figure 14, Item 15).
11. If a new hydraulic brake actuator assembly (Figure 14, Item 1) was installed, install new brake fluid caution decal to hydraulic brake actuator assembly (Figure 14, Item 11) (WP 0007).

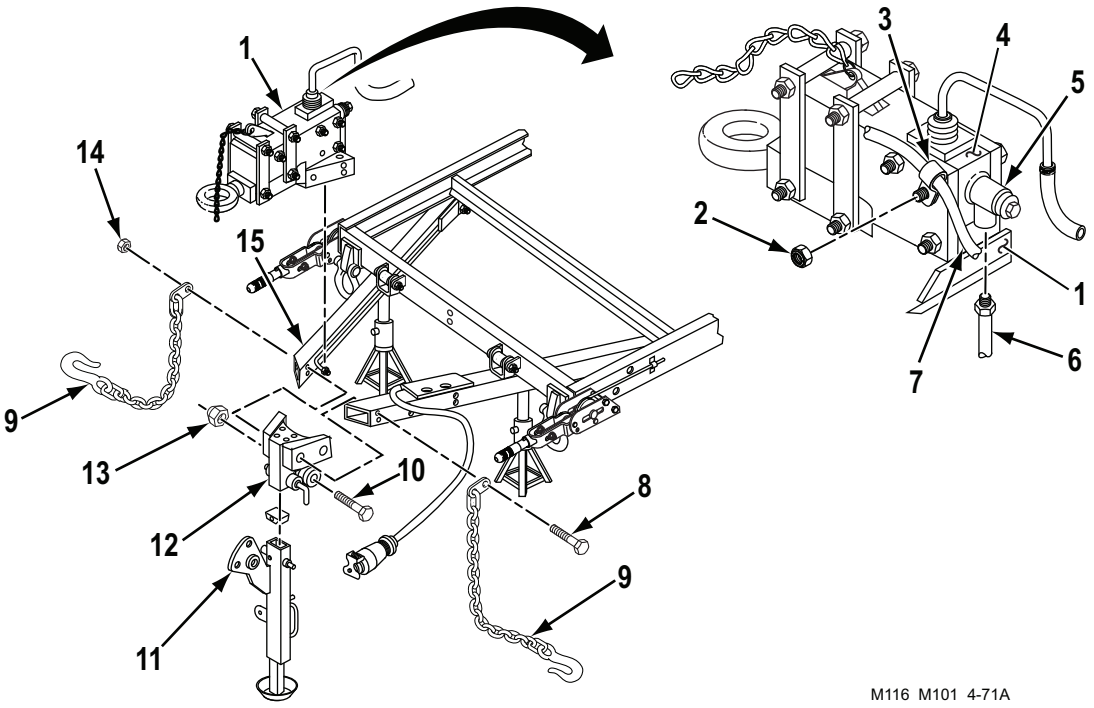

Figure 14. Front Support Leg Installation.

END OF TASK

FOLLOW ON TASK

1. Lubricate hydraulic brake actuator assembly and service master cylinder as required (WP 0077).
2. Bleed hydraulic brake system (WP 0053).

END OF TASK

END OF WORK PACKAGE

FIELD MAINTENANCE
MASTER CYLINDER MAINTENANCE

INITIAL SETUP:

Tools and Special Tools
Tool Kit, General Mechanic's
(WP 0115, Table 1, Item 1)
Wrench, Torque
(WP 0115, Table 1, Item 2)

Materials/Parts
Two self-locking nuts
(WP 0091, Figure 10, Item 13)
Gasket (WP 0091, Figure 10, Item 35)
Gasket (WP 0091, Figure 10, Item 38)
Degreasing solvent

Materials/Parts (cont.)
(WP 0114, Table 1, Item 9)
Detergent, general purpose
(WP 0114, Table 1, Item 11)
Rag, wiping (WP 0114, Table 1, Item 24)

References
WP 0053
WP 0077

Equipment Condition
Handbrakes applied (WP 0005)

WARNING



- Accidental or intentional introduction of liquid contaminants into the environment is a violation of state, federal, and military regulations. Refer to local environmental office for information concerning storage, use, and disposal of these liquids. Failure to comply may cause damage to environment and health of personnel. Seek medical attention in the event of an injury.
- When performing maintenance on brake system, make sure wheels are securely chocked. Failure to comply may cause trailer to roll, resulting in death or injury to personnel. Seek medical attention in the event of an injury.

NOTE

Use a suitable container to catch any draining brake fluid. Make sure all spills are cleaned up. Refer to local procedures for responding to fluid spills and disposal of clean up materials. Refer to local procedures for storage and disposal of drained fluids.

REMOVAL

1. Disconnect hydraulic brake front tube assembly (Figure 1, Item 10) from connector (Figure 1, Item 7) at master cylinder (Figure 1, Item 5).

NOTE

On newer-model trailers, spacers are welded to inside of channel.

2. Remove two self-locking nuts (Figure 1, Item 17) and cap screws (Figure 1, Item 19), four spacers (Figure 1, Item 2), and master cylinder (Figure 1, Item 5) from channel (Figure 1, Item 18). Discard self-locking nuts (Figure 1, Item 17).

NOTE

The boot may be inside hydraulic brake actuator assembly.

3. Remove boot (Figure 1, Item 20) from master cylinder (Figure 1, Item 5) or from inside hydraulic brake actuator assembly (Figure 1, Item 1).
4. Remove fluid passage bolt (Figure 1, Item 9), washer (Figure 1, Item 8), connector (Figure 1, Item 7), and washer (Figure 1, Item 6) from master cylinder (Figure 1, Item 5).

NOTE

For trailers with master cylinder cap, do Step 5. For trailers with drain hose, do Step 6.

5. Remove cap (Figure 1, Item 4) and gasket (Figure 1, Item 3) from master cylinder (Figure 1, Item 5). Discard gasket (Figure 1, Item 3).
6. Loosen clamp (Figure 1, Item 12) and remove drain hose (Figure 1, Item 13) from vent tube (Figure 1, Item 11).
7. Remove vent tube (Figure 1, Item 11), filler cap (Figure 1, Item 16), baffle (Figure 1, Item 15), and gasket (Figure 1, Item 14) from master cylinder (Figure 1, Item 5). Discard gasket (Figure 1, Item 14).

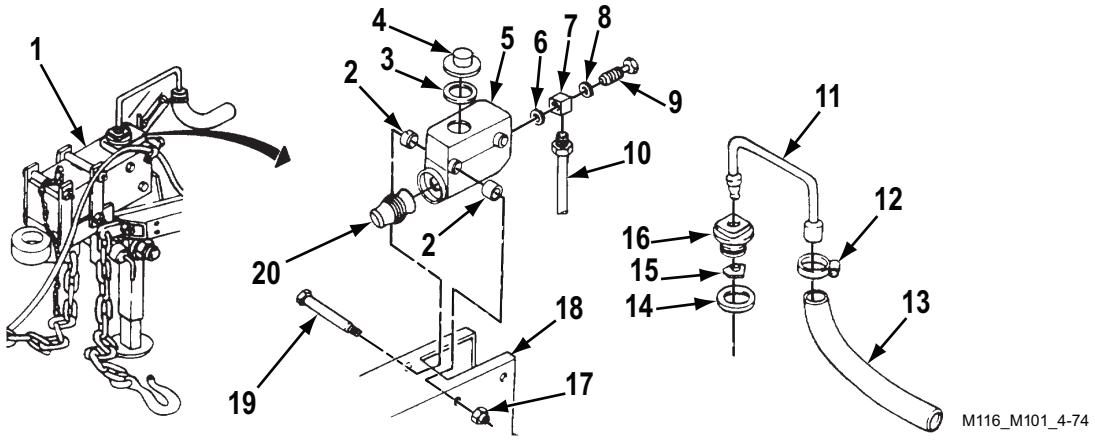

Figure 1. Master Cylinder Removal.

END OF TASK

CLEANING AND INSPECTION

WARNING


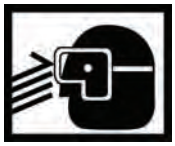

- Solvent cleaning compound MIL-PRF-680 may be irritating to the eyes and skin. Use protective gloves and goggles. First aid for skin contact: remove contaminated clothing. Wash skin thoroughly with soap and water. First aid for eye contact: flush with water until irritation subsides. If symptoms persist, seek medical attention. Failure to comply may result in death or injury to personnel. Seek medical attention in the event of an injury.
- Use solvent cleaning compound MIL-PRF-680 in a well ventilated area. Use respirator as needed. Accidental ingestion can cause irritation of digestive tract and respiratory tract. May cause lung and central nervous system damage. Can be fatal if swallowed. Inhalation of high/massive concentrations can cause coma or be fatal. First aid for ingestion: do not induce vomiting. Seek immediate medical attention. First aid for inhalation: move to fresh air. If not breathing, provide artificial respiration. If symptoms persist, seek medical attention. Failure to comply may result in death or injury to personnel. Seek medical attention in the event of an injury.
- MIL-PRF-680 solvent is combustible; DO NOT use or store near heat, sparks, flame, or other ignition sources. Use mechanical ventilation whenever product is used in a confined space, heated above ambient temperatures, or agitated. Keep container sealed when not in use. Failure to comply may result in death or injury to personnel. Seek medical attention in the event of an injury.
- Improper cleaning methods and use of unauthorized cleaning liquids or solvents can injure personnel and damage equipment. Failure to comply may result in death or injury to personnel. Seek medical attention in the event of an injury.
- Rags saturated with solvent cleaning compound must be disposed of IAW authorized facility procedures. Failure to comply may result in death or injury to personnel. Seek medical attention in the event of an injury.
- Solvent cleaning compound MIL-PRF-680 is toxic and flammable. Always wear protective goggles and gloves, and use only in a well-ventilated area. Avoid contact with skin, eyes, and clothes, and DO NOT breathe vapors. DO NOT use near open flame or excessive heat. Failure to comply may result in death or injury to personnel. Seek medical attention in the event of an injury.

1. Clean all removed components except boot with cleaning solvent and allow to dry. Clean boot with detergent and water.
2. Inspect boot for tears. Replace if damaged.
3. Inspect master cylinder and mounting hardware for cracks, damaged threads, or other damage. Replace if damaged.

END OF TASK

INSTALLATION

NOTE

For trailers with master cylinder cap, do Steps 1 and 2. For trailers with drain hose, do Steps 3 and 4.

1. Install new gasket (Figure 2, Item 3) and cap (Figure 2, Item 4) on master cylinder (Figure 2, Item 5).
2. Install fluid passage bolt (Figure 2, Item 9), washer (Figure 2, Item 8), connector (Figure 2, Item 7), and washer (Figure 2, Item 6) on master cylinder (Figure 2, Item 5).
3. Install new gasket (Figure 2, Item 14), baffle (Figure 2, Item 15), filler cap (Figure 2, Item 16), and vent tube (Figure 2, Item 11) on master cylinder (Figure 2, Item 5).
4. Install drain hose (Figure 2, Item 13) on vent tube (Figure 2, Item 11) and tighten clamp (Figure 2, Item 12).

NOTE

On newer-model trailers, spacers are welded to inside of channel.

5. Position boot (Figure 2, Item 20), master cylinder (Figure 2, Item 5), and four spacers (Figure 2, Item 2) in channel (Figure 2, Item 18) with boot (Figure 2, Item 20) engaged inside hydraulic brake actuator assembly (Figure 2, Item 1). Install two cap screws (Figure 2, Item 19) and new self-locking nuts (Figure 2, Item 17) on master cylinder (Figure 2, Item 5). Torque self-locking nuts (Figure 2, Item 17) between 10 – 15 lb-ft (14 – 20 N•m).
6. Connect hydraulic brake front tube assembly (Figure 2, Item 10) to connector (Figure 2, Item 7) at master cylinder (Figure 2, Item 5).

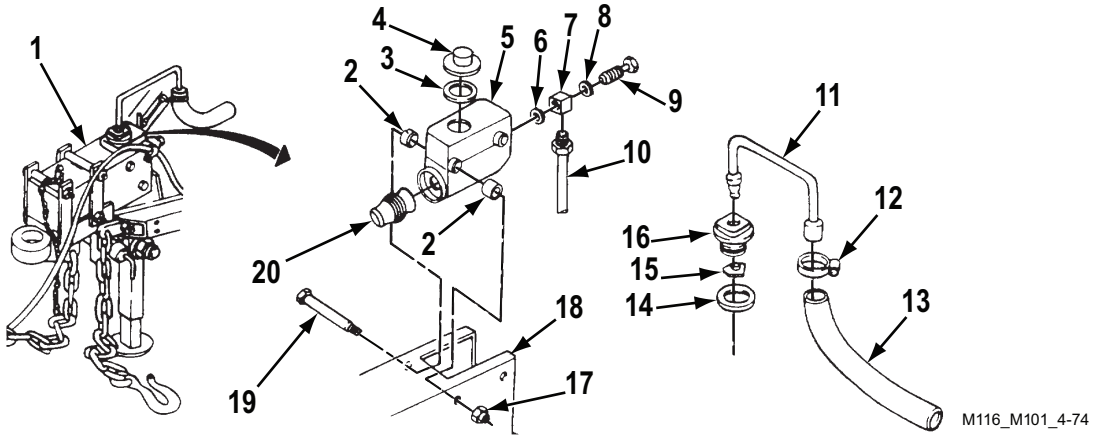

Figure 2. Master Cylinder Installation.

END OF TASK

FOLLOW ON TASK

1. Service master cylinder (WP 0077).
2. Bleed hydraulic brake system (WP 0053).

END OF TASK

END OF WORK PACKAGE

FIELD MAINTENANCE
HYDRAULIC BRAKE LINES REPLACEMENT

INITIAL SETUP:

Tools and Special Tools
Tool Kit, General Mechanic's
(WP 0115, Table 1, Item 1)

Materials/Parts
Self-locking nut (M101A2 and M116A2)
(WP 0092, Figure 11, Item 11)
Lockwasher
(WP 0092, Figure 11, Item 25)
Gasket, copper (WP 0092, Figure 11, Item 26)
Rag, wiping
(WP 0114, Table 1, Item 24)

References
WP 0053
WP 0078

Equipment Condition
Handbrakes applied (WP 0005)

WARNING



- Accidental or intentional introduction of liquid contaminants into the environment is a violation of state, federal, and military regulations. Refer to local environmental office for information concerning storage, use, and disposal of these liquids. Failure to comply may cause damage to environment and health of personnel. Seek medical attention in the event of an injury.
- When performing maintenance on brake system, make sure wheels are securely chocked. Failure to comply may cause trailer to roll, resulting in death or injury to personnel. Seek medical attention in the event of an injury.

NOTE

- Use a suitable container to catch any draining brake fluid. Make sure all spills are cleaned up. Refer to local procedures for responding to fluid spills and disposal of clean up materials. Refer to local procedures for storage and disposal of drained fluids.
- For information on manufacturing tube assemblies refer to (WP 0078).

FRONT TUBE ASSEMBLY REMOVAL

NOTE

Quantity of mounting hardware varies slightly with model. Quantities indicated in task are for the M101A3 and the M116A3.

1. Remove five screws (Figure 1, Item 5) from five loop clamps (Figure 1, Item 3) along curbside drawbar (Figure 1, Item 2).
2. Disconnect front tube assembly (Figure 1, Item 4) from connector (Figure 1, Item 7) at master cylinder (Figure 1, Item 1).
3. Disconnect front tube assembly (Figure 1, Item 4) from coupling (Figure 1, Item 6). Remove front tube assembly from curbside drawbar (Figure 1, Item 2).
4. Remove five loop clamps (Figure 1, Item 3) from front tube assembly (Figure 1, Item 4).

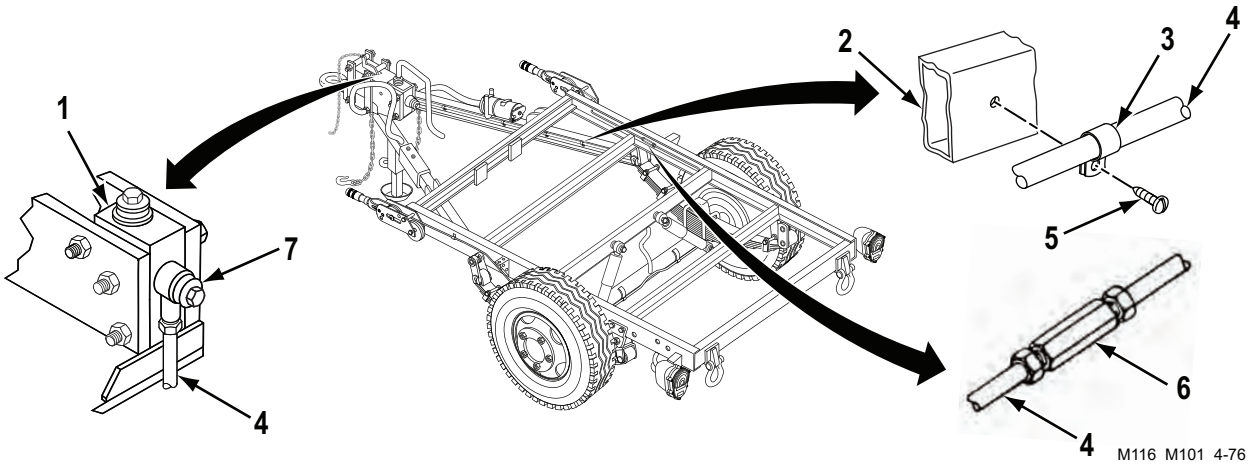

Figure 1. Front Tube Assembly.

END OF TASK

FRONT TUBE ASSEMBLY INSTALLATION

NOTE

Quantity of mounting hardware varies slightly with model. Quantities indicated in task are for the M101A3 and the M116A3.

1. Install five loop clamps (Figure 1, Item 3) on front tube assembly (Figure 1, Item 4).
2. Position front tube assembly (Figure 1, Item 4) along curbside drawbar (Figure 1, Item 2) and connect to coupling (Figure 1, Item 6).
3. Connect front tube assembly (Figure 1, Item 4) to connector (Figure 1, Item 7) at master cylinder (Figure 1, Item 1).
4. Install five loop clamps (Figure 1, Item 3) on curbside drawbar (Figure 1, Item 2) with five screws (Figure 1, Item 5).

END OF TASK

REAR TUBE ASSEMBLY REMOVAL

1. Remove two screws (Figure 2, Item 8) from two loop clamps (Figure 2, Item 7) along curbside frame (Figure 2, Item 6).
2. Disconnect rear tube assembly (Figure 2, Item 2) from coupling (Figure 2, Item 5).
3. On the M101A2 and M116A2, remove self-locking nut (Figure 2, Item 3) and screw (Figure 2, Item 11) from loop clamp (Figure 2, Item 4) along crossmember. Disconnect rear tube assembly (Figure 2, Item 2) from hose assembly (Figure 2, Item 10) and remove. Discard self-locking nut (Figure 2, Item 3).
4. On the M101A3 and M116A3, remove rear tube assembly (Figure 2, Item 13) from hose assembly (Figure 2, Item 10) at retaining ring (Figure 2, Item 9).
5. On the M101A2 and M116A2, remove two loop clamps (Figure 2, Item 7) and loop clamp (Figure 2, Item 4) from rear tube assembly (Figure 2, Item 2).

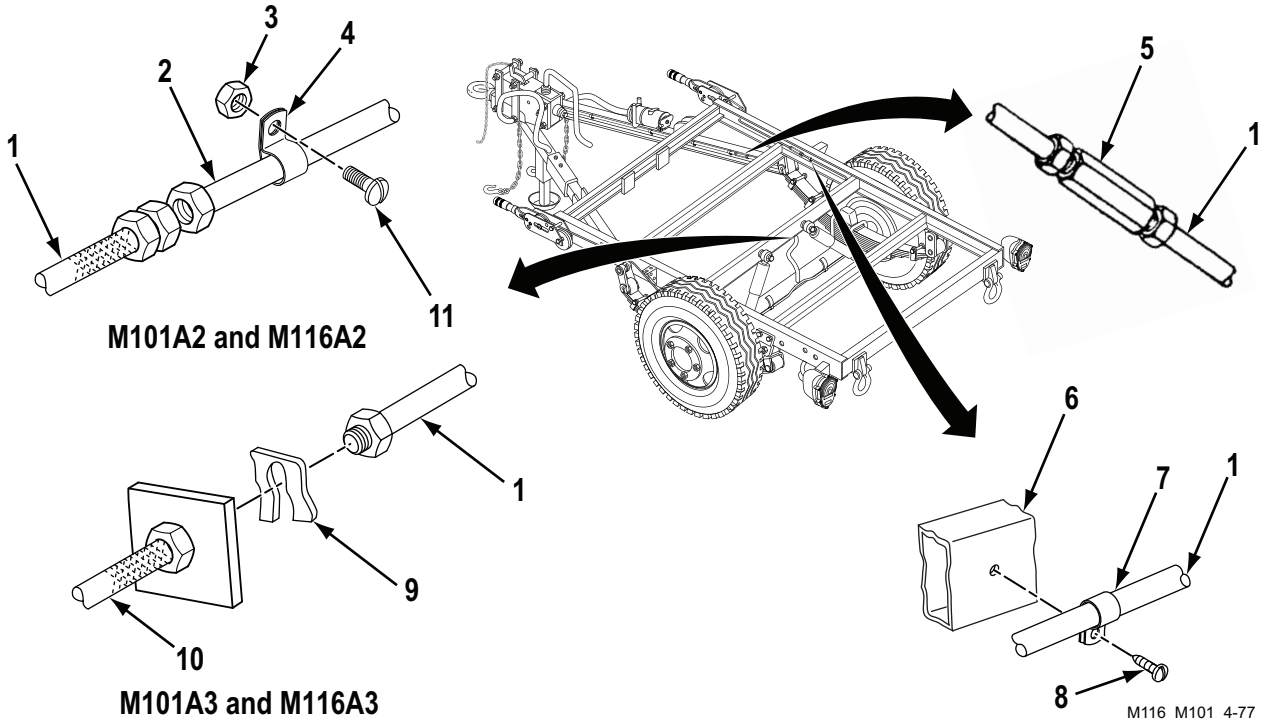

Figure 2. Rear Tube Assembly Removal.

END OF TASK

REAR TUBE ASSEMBLY INSTALLATION

1. On the M101A2 and M116A2, install two loop clamps (Figure 3, Item 7) and loop clamp (Figure 3, Item 4) on rear tube assembly (Figure 3, Item 2).
2. Position rear tube assembly (Figure 3, Item 2) along curbside frame (Figure 3, Item 6) and crossmember.
3. On the M101A3 and M116A3, connect rear tube assembly (Figure 3, Item 2) to hose assembly (Figure 3, Item 1) at retaining ring (Figure 3, Item 9).
4. On the M101A2 and M116A2, connect rear tube assembly (Figure 3, Item 2) to hose assembly (Figure 3, Item 1). Secure loop clamp (Figure 3, Item 4) to crossmember with screw (Figure 3, Item 11) and new self-locking nut (Figure 3, Item 3).
5. Connect rear tube assembly (Figure 3, Item 2) to coupling (Figure 3, Item 5).
6. Install two loop clamps (Figure 3, Item 7) on curbside frame (Figure 3, Item 6) with two screws (Figure 3, Item 8).

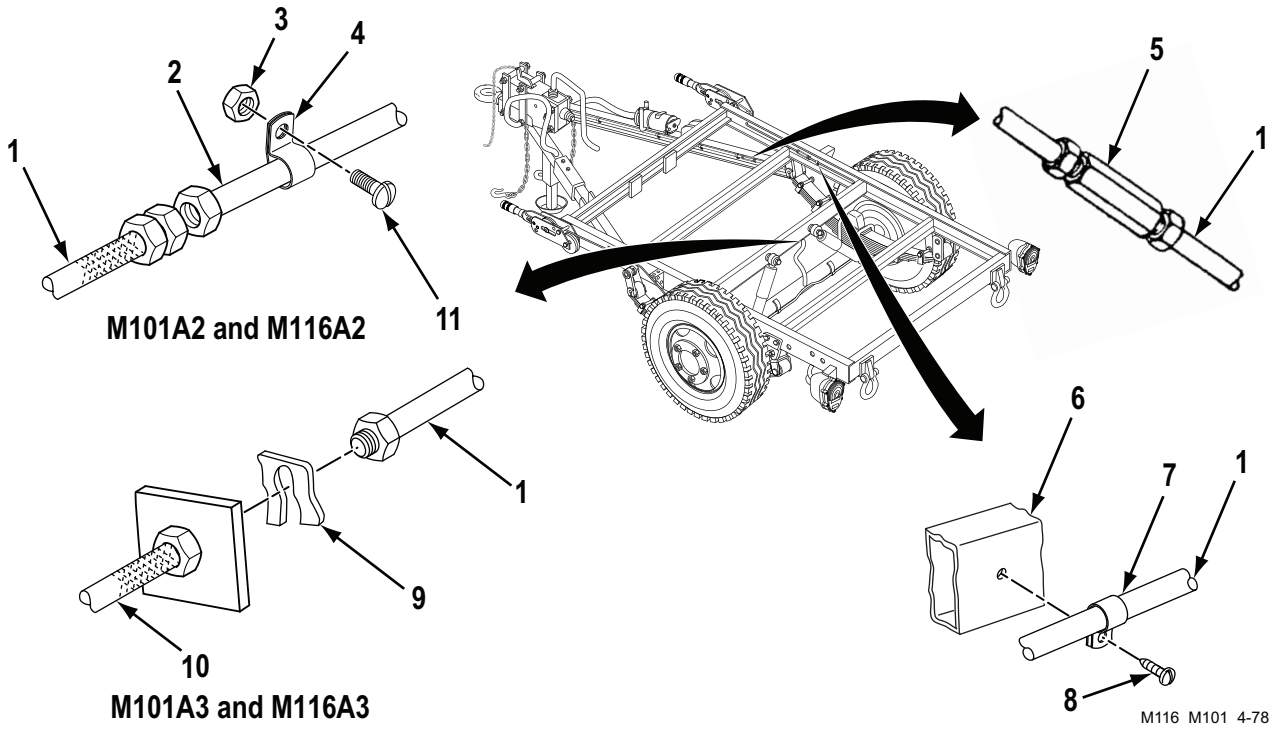

Figure 3. Rear Tube Assembly Installation.

END OF TASK

HOSE ASSEMBLY REMOVAL

1. Disconnect hose assembly (Figure 4, Item 1) from tee (Figure 4, Item 4) at axle.
2. Remove copper gasket (Figure 4, Item 3), if present, from hose assembly (Figure 4, Item 1). Discard copper gasket (Figure 4, Item 3).
3. On the M101A3 and M116A3, remove retaining ring (Figure 4, Item 5) from hose assembly (Figure 4, Item 1) and release hose assembly (Figure 4, Item 1) from bracket (Figure 4, Item 6) on crossmember.

HOSE ASSEMBLY REMOVAL - Continued

4. Remove hose assembly (Figure 4, Item 1) from rear tube assembly (Figure 4, Item 2).

END OF TASK

HOSE ASSEMBLY INSTALLATION

1. Connect hose assembly (Figure 4, Item 1) to rear tube assembly (Figure 4, Item 2).
2. On the M101A3 and M116A3, secure hose assembly (Figure 4, Item 1) to bracket (Figure 4, Item 5) on crossmember with retaining ring (Figure 4, Item 5).
3. Install new copper gasket (Figure 4, Item 3), if present, on hose assembly (Figure 4, Item 1).
4. Connect hose assembly (Figure 4, Item 1) to tee (Figure 4, Item 4) at axle.

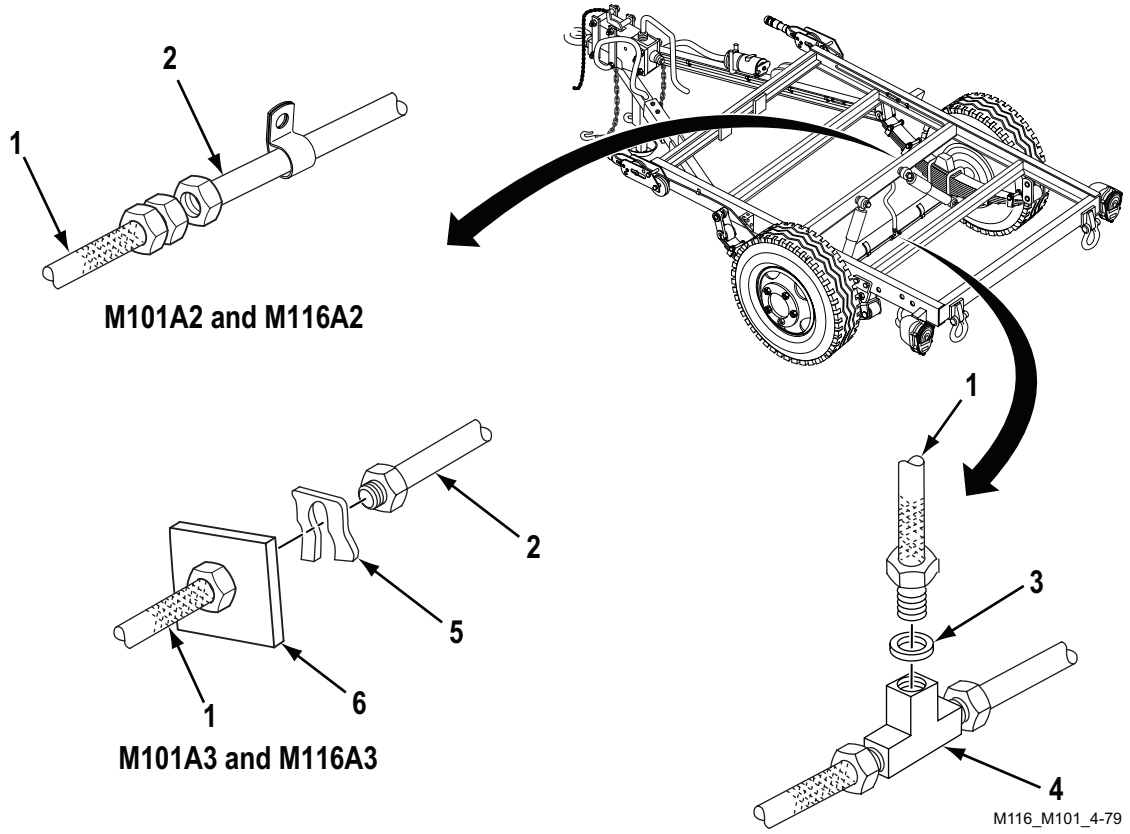

Figure 4. Hose Assembly Installation.

END OF TASK

ROADSIDE AND CURBSIDE TUBE ASSEMBLIES REMOVAL

1. Disconnect tube assembly (Figure 5, Item 5) from wheel cylinder (Figure 5, Item 4).
2. Disconnect tube assembly (Figure 5, Item 5) from tee (Figure 5, Item 8) and remove from axle.

NOTE

Do Steps 3 and 4 to remove tee from axle.

3. Disconnect hose assembly (Figure 5, Item 2) from tee (Figure 5, Item 8). Remove copper gasket (Figure 5, Item 3), if present, from hose assembly (Figure 5, Item 2). Discard copper gasket (Figure 5, Item 3)
4. Remove cap screw (Figure 5, Item 6), washer (Figure 5, Item 7), tee (Figure 5, Item 8), and lockwasher (Figure 5, Item 1) from axle. Discard lockwasher (Figure 5, Item 1).

END OF TASK

ROADSIDE AND CURBSIDE TUBE ASSEMBLIES INSTALLATION

NOTE

- Do Steps 1 and 2 to install tee on axle.
- The procedure for installing assemblies is the same for roadside and curbside.

1. Install new lockwasher (Figure 5, Item 1), tee (Figure 5, Item 8), washer (Figure 5, Item 7), and cap screw (Figure 5, Item 6) on axle.
2. Install new copper gasket (Figure 5, Item 3), if present, on hose assembly (Figure 5, Item 2). Connect hose assembly (Figure 5, Item 2) to tee (Figure 5, Item 8).
3. Position tube assembly (Figure 5, Item 5) along axle and connect to tee (Figure 5, Item 8).
4. Connect tube assembly (Figure 5, Item 5) to wheel cylinder (Figure 5, Item 4).

ROADSIDE AND CURBSIDE TUBE ASSEMBLIES INSTALLATION - Continued

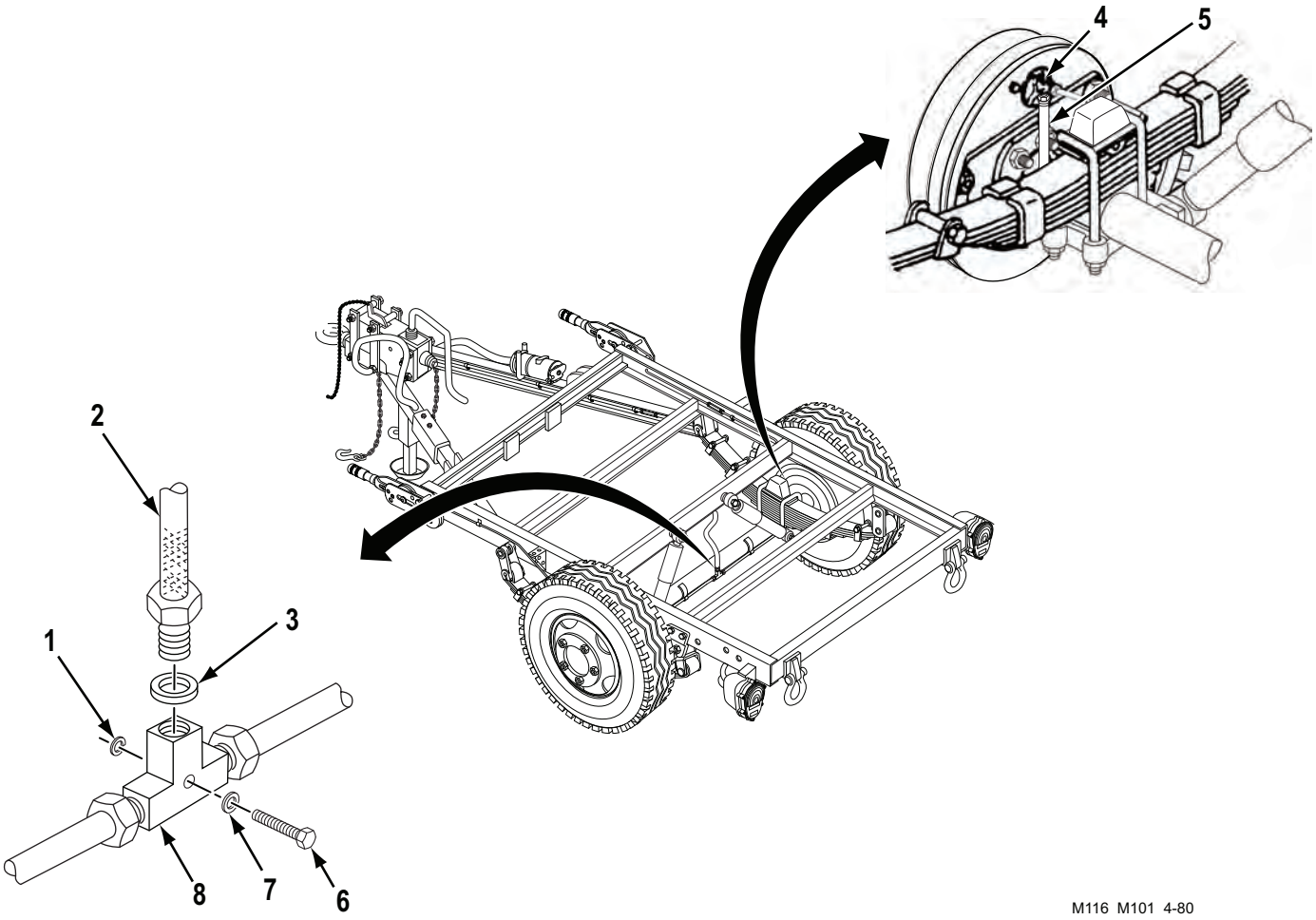

Figure 5. Roadside and Curbside Tube Assemblies Installation.

END OF TASK

FOLLOW ON TASK

Bleed hydraulic brake system (WP 0053).

END OF TASK

END OF WORK PACKAGE

FIELD MAINTENANCE
BLEEDING HYDRAULIC BRAKE SYSTEM

INITIAL SETUP:

Tools and Special Tools
Tool Kit, General Mechanic's
(WP 0115, Table 1, Item 1)

Materials/Parts
Brake fluid, automotive
(WP 0114, Table 1, Item 1)

Materials/Parts (cont.)
Hose, nonmetallic
(WP 0114, Table 1, Item 14)
Rag, wiping (WP 0114, Table 1, Item 24)

Equipment Condition
Handbrakes applied (WP 0005)

WARNING



- Accidental or intentional introduction of liquid contaminants into the environment is a violation of state, federal, and military regulations. Refer to local environmental office for information concerning storage, use, and disposal of these liquids. Failure to comply may cause damage to environment and health of personnel. Seek medical attention in the event of an injury.
- When performing maintenance on brake system, make sure wheels are securely chocked. Failure to comply may cause trailer to roll, resulting in death or injury to personnel. Seek medical attention in the event of an injury.

BLEEDING

1. Release breakaway lever (Figure 1, Item 1) by pulling up on leaf spring (Figure 1, Item 2) and pushing down on breakaway lever (Figure 1, Item 1). Release leaf spring (Figure 1, Item 2).

NOTE

Replace gasket if damaged.

2. Remove cap (Figure 1, Item 4) and gasket (Figure 1, Item 3) from master cylinder (Figure 1, Item 5).
3. Fill master cylinder (Figure 1, Item 5) with brake fluid to within 1/4 in (6.35 mm) of top. Install gasket (Figure 1, Item 3) and cap (Figure 1, Item 4) on master cylinder (Figure 1, Item 5) and finger-tighten.

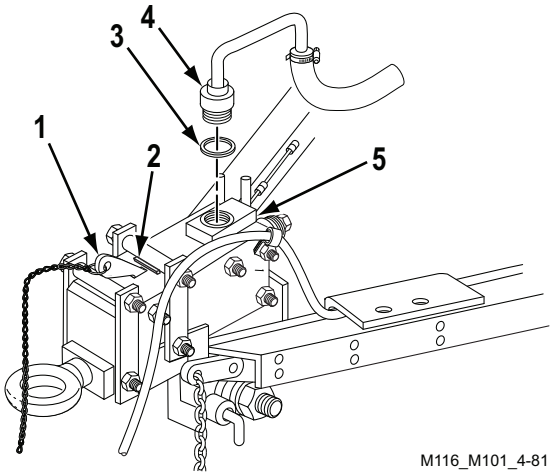

Figure 1. Fill Master Cylinder.

4. Install one end of hose (Figure 2, Item 1) over bleeder valve (Figure 2, Item 2) at wheel cylinder (Figure 2, Item 3). Place free end of hose (Figure 2, Item 1) in clean, clear container (Figure 2, Item 4).
5. Fill clear container (Figure 2, Item 4) half full with brake fluid. Make sure free end of hose (Figure 2, Item 1) is below the level of brake fluid.

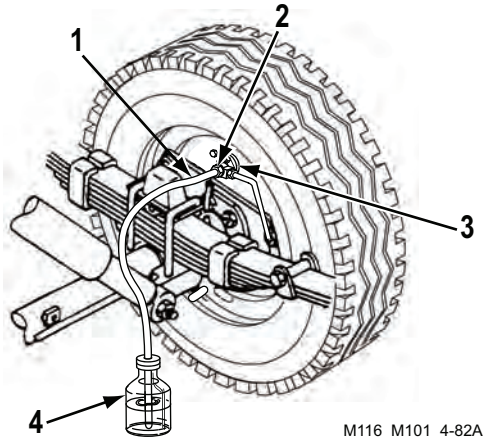

Figure 2. Bleeder Hose Installation.

BLEEDING - Continued

NOTE

Make sure master cylinder is kept full of brake fluid at all times during bleeding or air will enter the system, making it necessary to bleed the system again.

6. Apply and release breakaway lever (Figure 3, Item 1) four to five times, to apply pressure to brake system.
7. Leave breakaway lever (Figure 3, Item 1) in applied position.
8. Open bleeder valve (Figure 2, Item 2) to release air from brake system. Air is being released if there are air bubbles in clear container (Figure 2, Item 4).
9. Close bleeder valve (Figure 2, Item 2). Remove hose (Figure 2, Item 1) from bleeder valve (Figure 2, Item 2).
10. Repeat Steps 6 through 9 until fluid in clear container (Figure 2, Item 4) is free of air bubbles.
11. Release breakaway lever (Figure 3, Item 1).
12. Remove cap (Figure 3, Item 3) and gasket (Figure 3, Item 2) from master cylinder (Figure 3, Item 4). Discard gasket (Figure 3, Item 2) if damaged.
13. Fill master cylinder (Figure 3, Item 4) with brake fluid.
14. Install gasket (Figure 3, Item 2) and cap (Figure 3, Item 3) on master cylinder (Figure 3, Item 4).

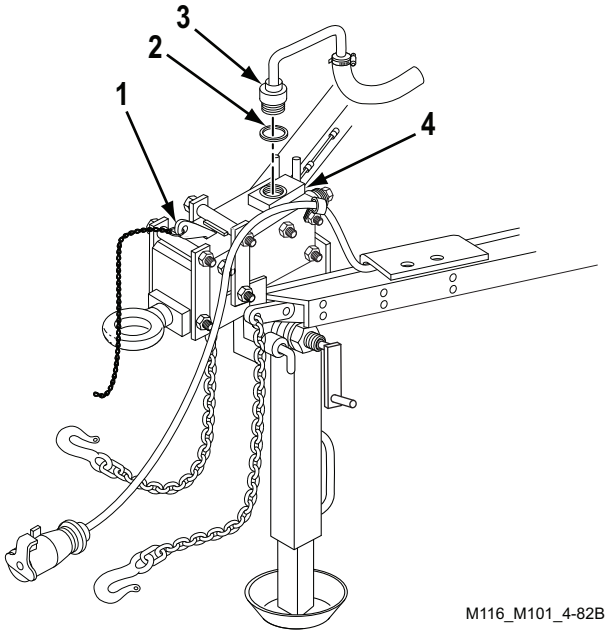

Figure 3. Hydraulic Brake System Bleeding.

END OF TASK

END OF WORK PACKAGE

FIELD MAINTENANCE
HUB, BRAKE DRUM, AND WHEEL BEARINGS MAINTENANCE
(ALL EXCEPT M101A1 AND M116A1)

INITIAL SETUP:

Tools and Special Tools
Tool Kit, General Mechanic's
(WP 0115, Table 1, Item 1)
Wrench, Torque (WP 0115, Table 1, Item 3)

Materials/Parts
Cotter pin (WP 0093, Figure 12, Item 3)
Seal (WP 0093, Figure 12, Item 8)
Eight shoulder bolts
(WP 0093, Figure 12, Item 10)
Cloth, abrasive
(WP 0114, Table 1, Item 6)
Degreasing solvent

Materials/Parts (cont.)
(WP 0114, Table 1, Item 9)
Grease, automotive and artillery
(WP 0114, Table 1, Item 10)
Rag, wiping (WP 0114, Table 1, Item 24)

References
TM 9-214

Equipment Condition
Wheels chocked and handbrake released
(WP 0005)
Wheel assembly removed (WP 0055)

WARNING



- When performing maintenance on brake system, make sure wheels are securely chocked. Failure to comply may cause trailer to roll, resulting in death or injury to personnel. Seek medical attention in the event of an injury.
- Trailer must be supported by blocking or support stands placed under axle or frame throughout maintenance procedure. Failure to comply may result in death or injury to personnel. Seek medical attention in the event of an injury.
- DO NOT handle brake shoes, brake drums, or other brake components unless area has been properly cleaned. Dust, which can be dangerous if you breathe it, may be on these components. Wear an approved filter mask and gloves. NEVER use compressed air or a dry brush to clean brake components. Clean dust or mud away from brake components with water and a wet, soft brush or cloth. Failure to comply may result in death or injury to personnel. Seek medical attention in the event of an injury.

REMOVAL

1. Support vehicle with suitable lifting devices at front and rear corners on side being maintained.
2. Remove grease cap (Figure 1, Item 1) from hub (Figure 1, Item 7).
3. Remove cotter pin (Figure 1, Item 2) from spindle (Figure 1, Item 8). Discard cotter pin (Figure 1, Item 2).

NOTE

Configurations may vary. If trailer has castellated nuts, do Step 4. If trailer is equipped with retainers and nuts, do Step 5.

4. Remove castellated nut (Figure 1, Item 3), flat washer (Figure 1, Item 4), and outer bearing (Figure 1, Item 5) from spindle (Figure 1, Item 8).
5. Remove retainer (Figure 1, Item 10), nut (Figure 1, Item 9), flat washer (Figure 1, Item 4), and outer bearing (Figure 1, Item 5) from spindle (Figure 1, Item 8).
6. Remove hub (Figure 1, Item 7) and brake drum (Figure 1, Item 6), as an assembly, from spindle (Figure 1, Item 8).

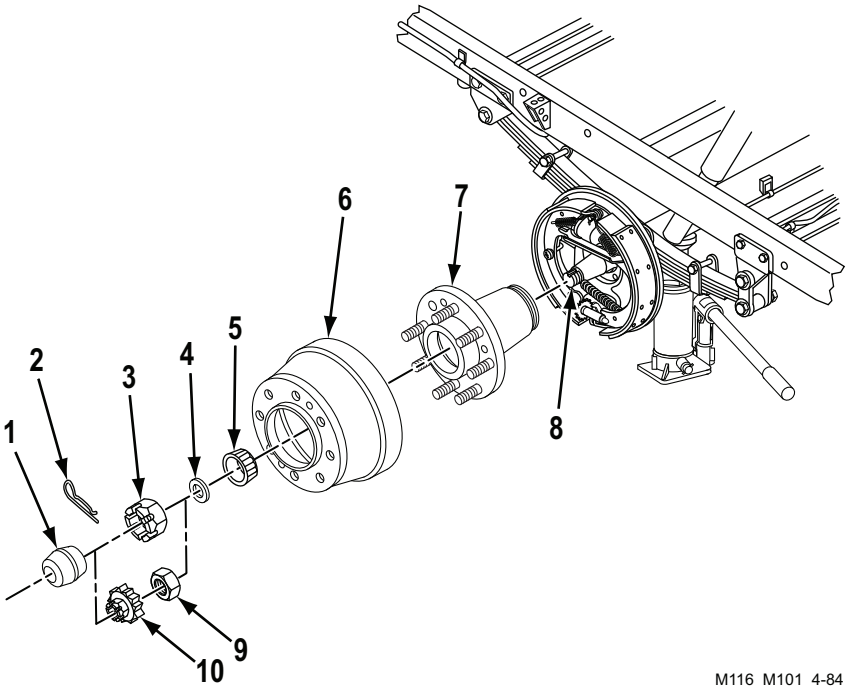

Figure 1. Hub, Brake Drum, and Wheel Bearing Removal.

END OF TASK

DISASSEMBLY

1. Remove seal (Figure 2, Item 6) and inner bearing (Figure 2, Item 7) from hub (Figure 2, Item 4). Discard seal (Figure 2, Item 6).
2. Remove two machine screws (Figure 2, Item 1) from hub (Figure 2, Item 4) and brake drum (Figure 2, Item 2). Separate hub (Figure 2, Item 4) and brake drum (Figure 2, Item 2).
3. Remove outer and inner caps (Figure 2, Items 3 and 8) from hub (Figure 2, Item 4).
4. If damaged, drive out eight shoulder bolts (Figure 2, Item 5) from hub (Figure 2, Item 4). Discard bolts (Figure 2, Item 5).

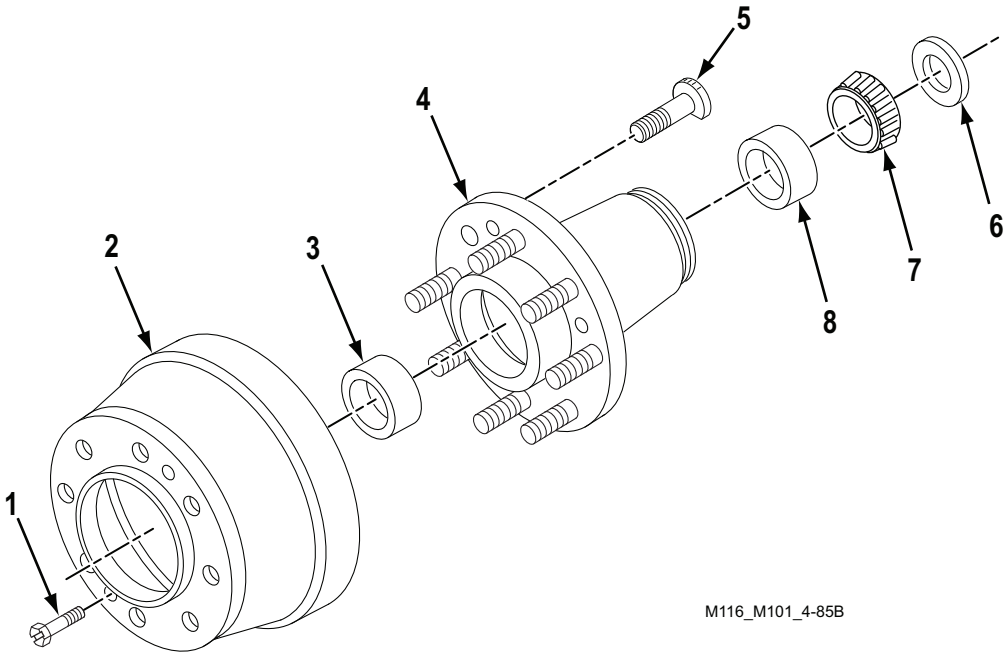

Figure 2. Hub, Brake Drum, and Wheel Bearing Disassembly.

END OF TASK

CLEANING AND INSPECTION

WARNING


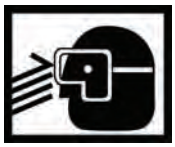

- Solvent cleaning compound MIL-PRF-680 may be irritating to the eyes and skin. Use protective gloves and goggles. First aid for skin contact: remove contaminated clothing. Wash skin thoroughly with soap and water. First aid for eye contact: flush with water until irritation subsides. If symptoms persist, seek medical attention. Failure to comply may result in death or injury to personnel. Seek medical attention in the event of an injury.
- Use solvent cleaning compound MIL-PRF-680 in a well ventilated area. Use respirator as needed. Accidental ingestion can cause irritation of digestive tract and respiratory tract. May cause lung and central nervous system damage. Can be fatal if swallowed. Inhalation of high/massive concentrations can cause coma or be fatal. First aid for ingestion: do not induce vomiting. Seek immediate medical attention. First aid for inhalation: move to fresh air. If not breathing, provide artificial respiration. If symptoms persist, seek medical attention. Failure to comply may result in death or injury to personnel. Seek medical attention in the event of an injury.
- MIL-PRF-680 solvent is combustible; DO NOT use or store near heat, sparks, flame, or other ignition sources. Use mechanical ventilation whenever product is used in a confined space, heated above ambient temperatures, or agitated. Keep container sealed when not in use. Failure to comply may result in death or injury to personnel. Seek medical attention in the event of an injury.
- Improper cleaning methods and use of unauthorized cleaning liquids or solvents can injure personnel and damage equipment. Failure to comply may result in death or injury to personnel. Seek medical attention in the event of an injury.
- Rags saturated with solvent cleaning compound must be disposed of IAW authorized facility procedures. Failure to comply may result in death or injury to personnel. Seek medical attention in the event of an injury.
- Solvent cleaning compound MIL-PRF-680 is toxic and flammable. Always wear protective goggles and gloves, and use only in a well-ventilated area. Avoid contact with skin, eyes, and clothes, and DO NOT breathe vapors. DO NOT use near open flame or excessive heat. Failure to comply may result in death or injury to personnel. Seek medical attention in the event of an injury.

1. Clean and inspect inner and outer bearings and cups in accordance with TM 9-214. If any bearing or cup needs replacing, all bearings and cups must be replaced.
2. Clean all other removed components with cleaning solvent and soft cloth rag and allow to dry.
3. Wipe spindle clean with cleaning solvent and soft cloth rag. Inspect spindle for cracks, bends, and scored or discolored bearing surfaces. If threads are damaged, restore. Notify Supervisor if spindle is damaged beyond repair.
4. Inspect hub for cracks, breaks, and burrs. Remove burrs with abrasive cloth. Replace hub if damaged.
5. Inspect stud holes of brake drum for cracks. Discard brake drum if stud holes are cracked.

CLEANING AND INSPECTION - Continued

WARNING

DO NOT use a brake drum that exceeds maximum wear specifications. Failure to comply may result in death or injury to personnel. Seek medical attention in the event of an injury.

6. Measure inside diameter of brake drum. Discard and replace brake drum if inside diameter exceeds 12.065 in (30.65 cm).
7. Inspect braking surface of brake drum for cracks, hot spots, and scoring. Discard and replace brake drum if damaged.
8. Inspect braking surface for out-of-round at 45 degree intervals. Out-of-round should not exceed 0.015 in (0.38 mm). If runout exceeds 0.015 in (0.38 mm), replace brake drum.
9. Inspect all remaining components for damage. Replace if damaged.

END OF TASK

ASSEMBLY

1. If removed, drive eight new shoulder bolts (Figure 3, Item 5) into hub (Figure 3, Item 4).
2. Install outer and inner cups (Figure 3, Items 3 and 8) in hub (Figure 3, Item 4).
3. Align holes in brake drum (Figure 3, Item 2) with holes in hub (Figure 3, Item 4). Loosely install two machine screws (Figure 3, Item 1) in brake drum (Figure 3, Item 2).
4. Tap brake drum (Figure 3, Item 2) against hub (Figure 3, Item 4) with soft-faced hammer. Fully tighten two machine screws (Figure 3, Item 1).
5. Pack inner bearing (Figure 3, Item 7) with grease and install in hub (Figure 3, Item 4).
6. Install new seal (Figure 3, Item 6) in hub (Figure 3, Item 4).

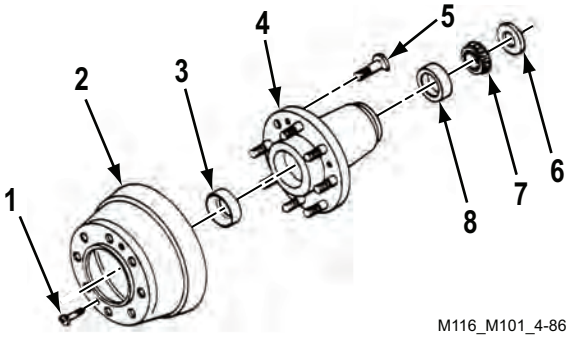

Figure 3. Hub, Brake Drum, and Wheel Bearing Assembly.

END OF TASK

INSTALLATION

1. Lightly coat spindle (Figure 4, Item 8) with grease.
2. Install hub (Figure 4, Item 7) and brake drum (Figure 4, Item 6), as an assembly, on spindle (Figure 4, Item 8).
3. Pack outer bearing (Figure 4, Item 5) with grease and install on spindle (Figure 4, Item 8).

NOTE

Configurations may vary. If trailer has castellated nuts, do Step 4. If trailer is equipped with retainers and nuts, do Step 5.

4. Install flat washer (Figure 4, Item 4) and castellated nut (Figure 4, Item 3) on spindle (Figure 4, Item 8).
5. Install flat washer (Figure 4, Item 4), nut (Figure 4, Item 9), and retainer (Figure 4, Item 10) on spindle (Figure 4, Item 8).
6. Perform wheel bearing adjustment.

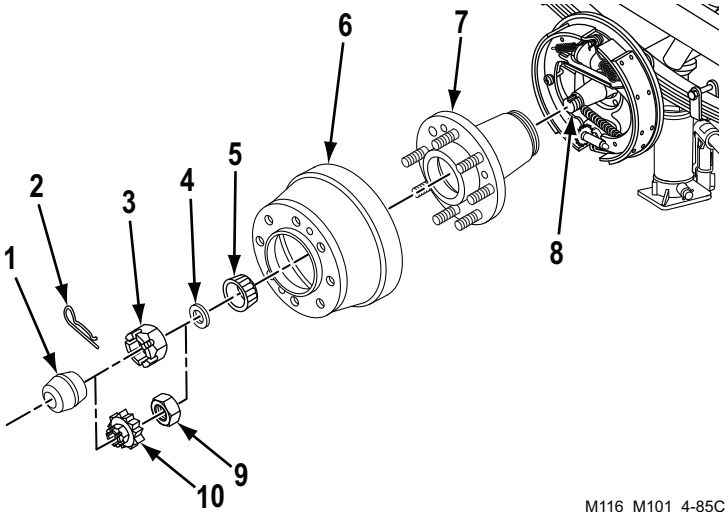

Figure 4. Hub, Brake Drum, and Wheel Bearing Replacement.

END OF TASK

WHEEL BEARING ADJUSTMENT

NOTE

- If performing wheel bearing adjustment as part of troubleshooting when wheel assembly has not been removed, perform Steps 1 through 12.
- If performing wheel bearing adjustment as a follow-on to hub, brake drum, and wheel bearings maintenance, perform Steps 5 through 12 only.

1. Apply handbrakes. Chock wheel assembly opposite the side being adjusted. Raise vehicle at front and rear corners of side being maintained until wheel assembly is clear of ground. Support vehicle with suitable support stand.
2. Release handbrake on side being adjusted (WP 0005).
3. Remove grease cap (Figure 5, Item 1) from hub (Figure 5, Item 4).
4. Remove cotter pin (Figure 5, Item 2) from spindle (Figure 5, Item 5). Discard cotter pin (Figure 5, Item 2).
5. Loosen nut (Figure 5, Item 3) on spindle (Figure 5, Item 5) until hub (Figure 5, Item 4) and brake drum (Figure 5, Item 6) turn freely.
6. Torque nut (Figure 5, Item 3) to 30 lb-ft (41 N•m) while turning hub (Figure 5, Item 4) and brake drum (Figure 5, Item 6), to seat bearings.
7. Back off nut (Figure 5, Item 3) 1/16 turn. Finger-tighten nut.
8. Install new cotter pin (Figure 5, Item 2) in spindle (Figure 5, Item 5) and bend back ends. Make sure hub (Figure 5, Item 4) and brake drum (Figure 5, Item 6) turn freely.
9. Install grease cap (Figure 5, Item 1) on hub (Figure 5, Item 4).
10. Apply handbrakes (WP 0005).
11. If removed, install wheel assembly (WP 0055).
12. Remove lifting devices and lower vehicle.

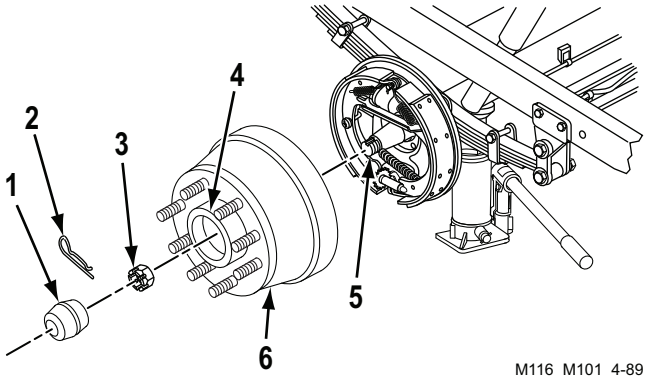

Figure 5. Wheel Bearing Adjustment.

END OF TASK

END OF WORK PACKAGE

FIELD MAINTENANCE
HUB, BRAKE DRUM, AND WHEEL BEARINGS MAINTENANCE (M101A1 AND M116A1)

INITIAL SETUP:

Tools and Special Tools
Tool Kit, General Mechanic's
(WP 0115, Table 1, Item 1)

Materials/Parts
Six lockwashers (WP 0093, Figure 12, Item 17)
Gasket (WP 0093, Figure 12, Item 19)
Seal (WP 0093, Figure 12, Item 25)
Oil (WP 0114, Table 1, Item 21)
Cloth, abrasive (WP 0114, Table 1, Item 6)
Degreasing solvent
(WP 0114, Table 1, Item 9)

Materials/Parts (cont.)
Grease, automotive and artillery
(WP 0114, Table 1, Item 10)
Rag, wiping (WP 0114, Table 1, Item 24)

References
TM 9-214
WP 0034

Equipment Condition
Wheels chocked and handbrake released
(WP 0005)
Wheel assembly removed (WP 0055)

WARNING



- When performing maintenance on brake system, make sure wheels are securely chocked. Failure to comply may cause trailer to roll, resulting in death or injury to personnel. Seek medical attention in the event of an injury.
- Trailer must be supported by blocking or support stands placed under axle or frame throughout maintenance procedure. Failure to comply may result in death or injury to personnel. Seek medical attention in the event of an injury.
- DO NOT handle brake shoes, brake drums, or other brake components unless area has been properly cleaned. Dust, which can be dangerous if you breathe it, may be on these components. Wear an approved filter mask and gloves. NEVER use compressed air or a dry brush to clean brake components. Clean dust or mud away from brake components with water and a wet, soft brush or cloth. Failure to comply may result in death or injury to personnel. Seek medical attention in the event of an injury.

REMOVAL

1. Raise trailer with lifting device. Position a suitable support stand under axle. Lower and remove lifting device.
2. Remove six cap screws (Figure 1, Item 1), lockwashers (Figure 1, Item 2), access cover (Figure 1, Item 3), and paper gasket (Figure 1, Item 4). Discard lockwashers (Figure 1, Item 2) and paper gasket (Figure 1, Item 4).
3. Remove outer bearing sleeve nut (Figure 1, Item 5), adjusting nut (Figure 1, Item 6), key washer (Figure 1, Item 7), outer bearing hub cone and roller (Figure 1, Item 8), and wheel hub and brake drum assembly (Figure 1, Item 9).

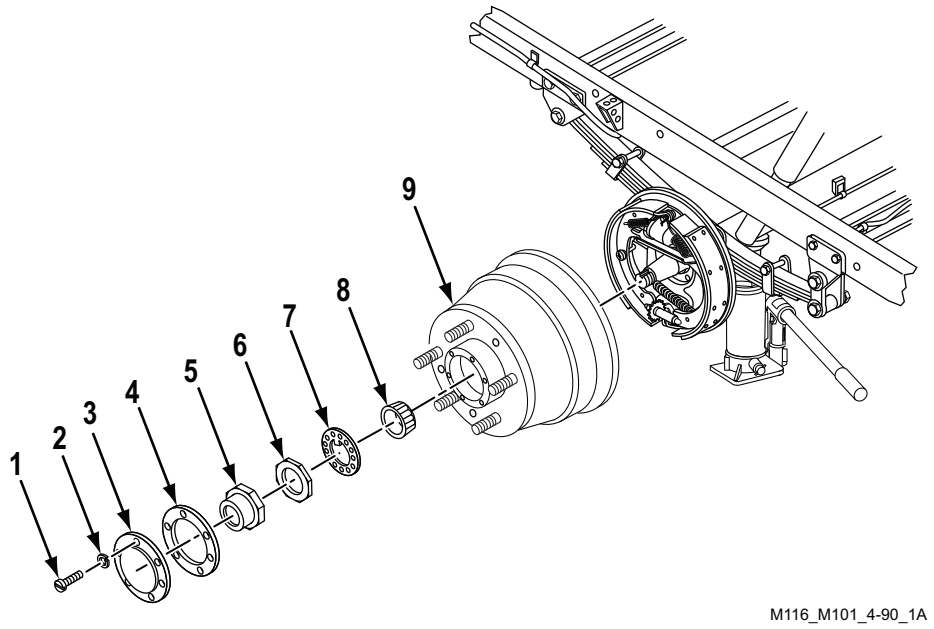

Figure 1. Hub, Brake Drum, and Bearing Removal.

END OF TASK

DISASSEMBLY

1. Remove retaining ring (Figure 2, Item 1), seal (Figure 2, Item 2), and inner bearing hub cone and roller (Figure 2, Item 3). Discard seal (Figure 2, Item 2).

DISASSEMBLY - Continued

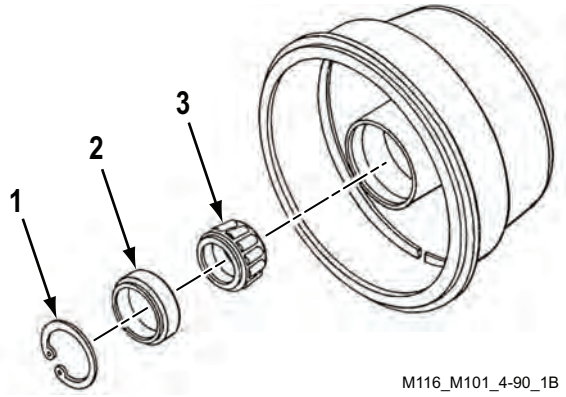

Figure 2. Retaining Ring, Seal, and Inner Bearing Disassembly.

2. Place wheel hub and brake drum assembly (Figure 3, Item 2) on work bench.
3. Remove three screws (Figure 3, Item 1).
4. Screw three retaining cap screws (Figure 3, Item 3) evenly into tapped holes (Figure 3, Item 4) to drive out wheel hub (Figure 3, Item 5) from brake drum (Figure 3, Item 6).
5. Place wheel hub (Figure 3, Item 5) on work bench. If damaged, drive out five shoulder bolts (Figure 3, Item 7) and discard.

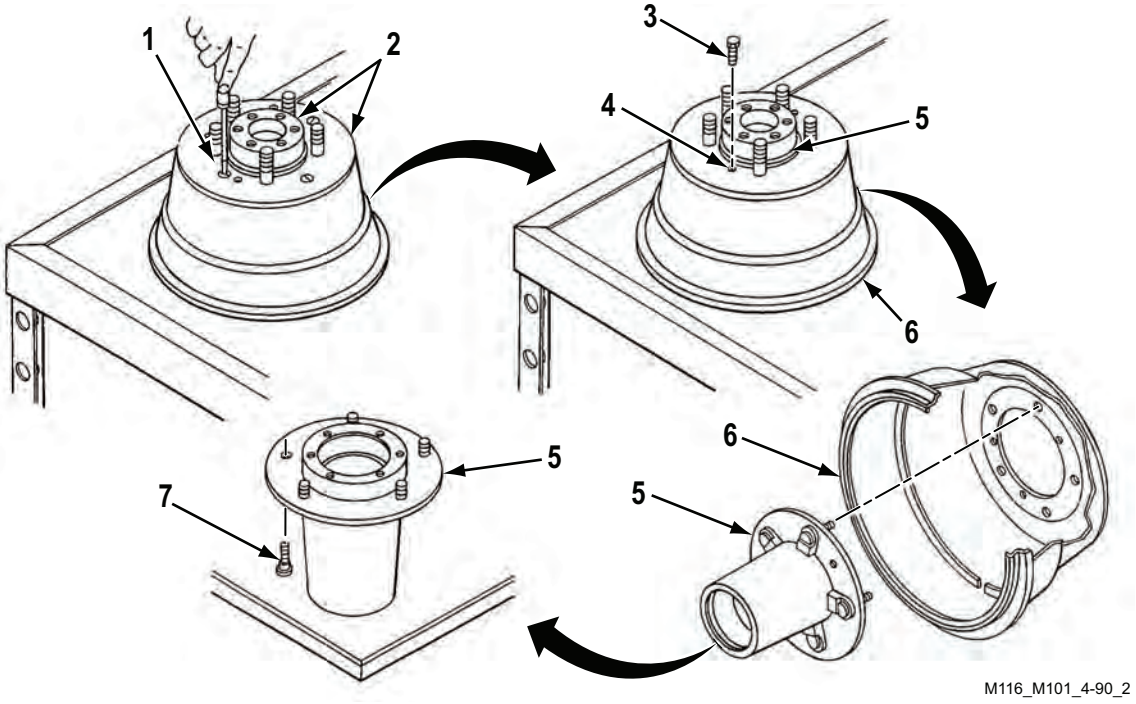

Figure 3. Hub and Brake Drum Disassembly.

END OF TASK

CLEANING AND INSPECTION

WARNING


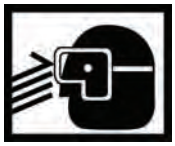

- Solvent cleaning compound MIL-PRF-680 may be irritating to the eyes and skin. Use protective gloves and goggles. First aid for skin contact: remove contaminated clothing. Wash skin thoroughly with soap and water. First aid for eye contact: flush with water until irritation subsides. If symptoms persist, seek medical attention. Failure to comply may result in death or injury to personnel. Seek medical attention in the event of an injury.
- Use solvent cleaning compound MIL-PRF-680 in a well ventilated area. Use respirator as needed. Accidental ingestion can cause irritation of digestive tract and respiratory tract. May cause lung and central nervous system damage. Can be fatal if swallowed. Inhalation of high/massive concentrations can cause coma or be fatal. First aid for ingestion: do not induce vomiting. Seek immediate medical attention. First aid for inhalation: move to fresh air. If not breathing, provide artificial respiration. If symptoms persist, seek medical attention. Failure to comply may result in death or injury to personnel. Seek medical attention in the event of an injury.
- MIL-PRF-680 solvent is combustible; DO NOT use or store near heat, sparks, flame, or other ignition sources. Use mechanical ventilation whenever product is used in a confined space, heated above ambient temperatures, or agitated. Keep container sealed when not in use. Failure to comply may result in death or injury to personnel. Seek medical attention in the event of an injury.
- Improper cleaning methods and use of unauthorized cleaning liquids or solvents can injure personnel and damage equipment. Failure to comply may result in death or injury to personnel. Seek medical attention in the event of an injury.
- Rags saturated with solvent cleaning compound must be disposed of IAW authorized facility procedures. Failure to comply may result in death or injury to personnel. Seek medical attention in the event of an injury.
- Solvent cleaning compound MIL-PRF-680 is toxic and flammable. Always wear protective goggles and gloves, and use only in a well-ventilated area. Avoid contact with skin, eyes, and clothes, and DO NOT breathe vapors. DO NOT use near open flame or excessive heat. Failure to comply may result in death or injury to personnel. Seek medical attention in the event of an injury.

1. Clean and inspect inner and outer bearing hub cones and rollers in accordance with TM 9-214. If any cone or roller needs replacing, all cones and rollers must be replaced.
2. Clean all other removed components with cleaning solvent and soft cloth rag and allow to dry.
3. Wipe spindle clean with cleaning solvent and soft cloth rag. Inspect spindle for cracks, bends, and scored or discolored bearing surfaces. If threads are damaged, restore. Notify Supervisor if spindle is damaged beyond repair.
4. Inspect wheel hub for cracks, breaks, and burrs. Remove burrs with abrasive cloth. Replace wheel hub if damaged.
5. Inspect brake drum for cracks, scoring, pitting, and grooves. Notify Supervisor if brake drum is damaged.
6. Inspect all remaining components for damage. Replace if damaged.

END OF TASK

ASSEMBLY

NOTE

- Use left shoulder bolts on left wheel hub and right shoulder bolts on right wheel hub.
- Align flat on shoulder bolt with flat on wheel hub flange.

1. If removed, drive five shoulder bolts (Figure 4, Item 1) into wheel hub (Figure 4, Item 2).
2. Coat mating surface (Figure 4, Item 3) of wheel hub (Figure 4, Item 2) and mating surface (Figure 4, Item 5) of brake drum (Figure 4, Item 7) with clean oil.
3. Align countersunk holes (Figure 4, Item 6) in brake drum (Figure 4, Item 7) with tapped holes (Figure 4, Item 8) in wheel hub (Figure 4, Item 2).

NOTE

Do not tighten screws at this time.

4. Install three screws (Figure 4, Item 4) loosely.
5. Using soft-face mallet, tap brake drum (Figure 4, Item 7) against wheel hub (Figure 4, Item 2).
6. Tighten three screws (Figure 4, Item 4).

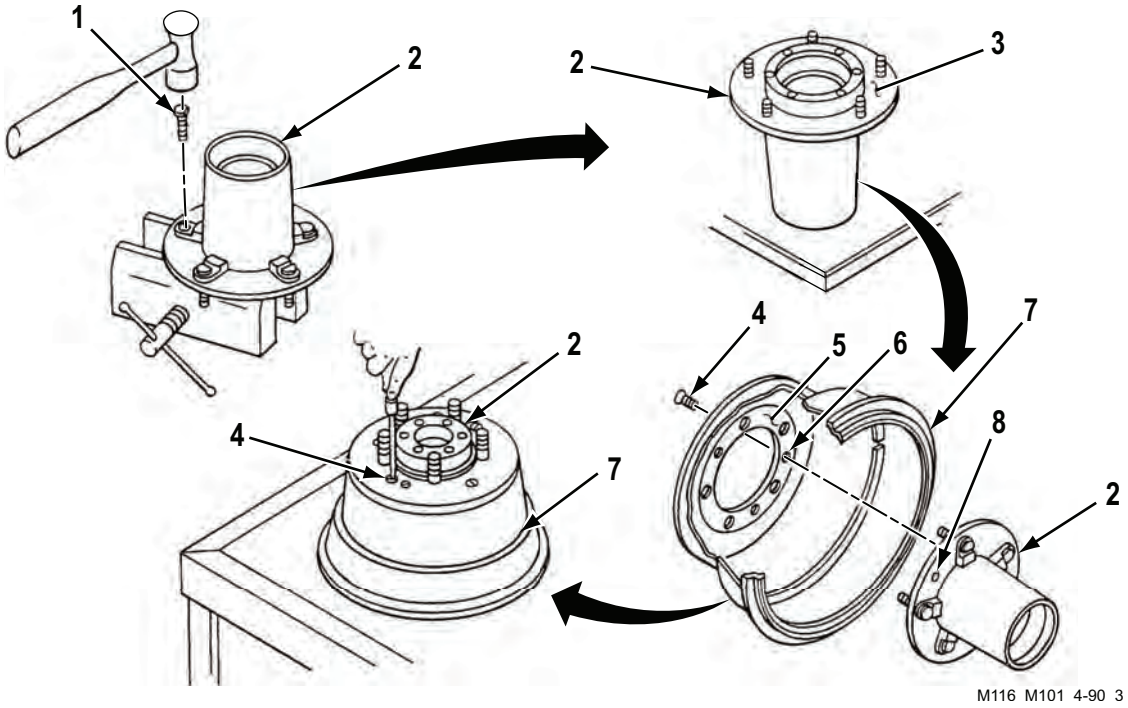

Figure 4. Hub and Brake Drum Assembly.

ASSEMBLY - Continued

7. Pack inner bearing hub cone and roller (Figure 5, Item 3) with grease and install.
8. Install new seal (Figure 5, Item 2) and retaining ring (Figure 5, Item 1).

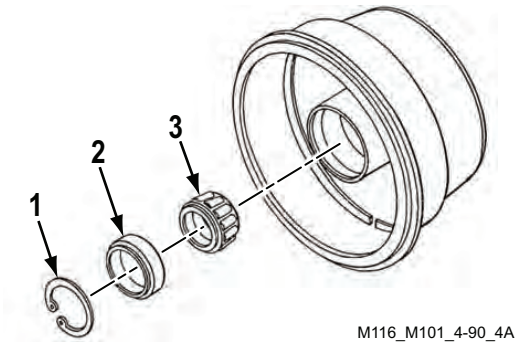

Figure 5. Retaining Ring, Seal, and Inner Bearing Assembly.

END OF TASK

INSTALLATION

1. Lightly coat spindle with grease and install wheel hub and brake drum assembly (Figure 6, Item 9).
2. Pack outer bearing hub cone and roller (Figure 6, Item 8) with grease and install on spindle.
3. Install key washer (Figure 6, Item 7), adjusting nut (Figure 6, Item 6), and outer bearing sleeve nut (Figure 6, Item 5) on wheel hub and brake drum assembly (Figure 6, Item 9).
4. Install new paper gasket (Figure 6, Item 4), access cover (Figure 6, Item 3), six new lockwashers (Figure 6, Item 2), and cap screws (Figure 6, Item 1) on wheel hub and brake drum assembly (Figure 6, Item 9).

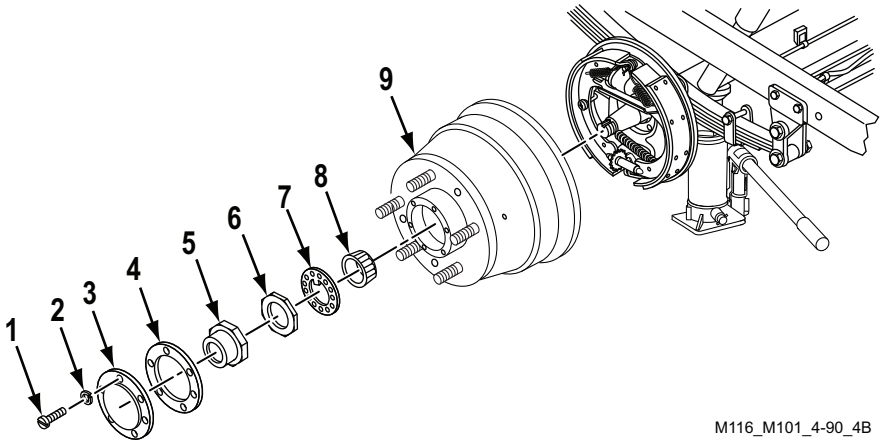

Figure 6. Hub, Brake Drum, and Bearing Installation.

END OF TASK

WHEEL BEARING ADJUSTMENT

1. Install wheel assembly (WP 0034) but leave support stand under axle.
2. Remove six cap screws (Figure 7, Item 1), lockwashers (Figure 7, Item 2), access cover (Figure 7, Item 3), and paper gasket (Figure 7, Item 4). Discard lockwashers (Figure 7, Item 2) and paper gasket (Figure 7, Item 4).
3. Remove outer bearing sleeve nut (Figure 7, Item 9) and key washer (Figure 7, Item 8).
4. Loosen adjusting nut (Figure 7, Item 5). Turn wheel assembly (Figure 7, Item 6) until wheel assembly binds. Loosen adjusting nut 1/6 turn or until wheel assembly does not bind.
5. Try to move wheel assembly (Figure 7, Item 6) by rocking. Wheel assembly should not move. If it does move, repeat Step 4.
6. Mate key washer (Figure 7, Item 8) and spindle. Slide key washer against adjusting nut (Figure 7, Item 5). Dowel pin (Figure 7, Item 7) should enter one of the holes in key washer (Figure 7, Item 8). If dowel pin (Figure 7, Item 7) does not enter hole in key washer (Figure 7, Item 8), perform Step 7.
7. Remove key washer (Figure 7, Item 8). Turn it over and reinstall. If dowel pin (Figure 7, Item 7) does not enter hole in key washer (Figure 7, Item 8), perform Step 8.
8. Loosen adjusting nut (Figure 7, Item 5) and repeat Steps 4 through 7.
9. Install outer bearing sleeve nut (Figure 7, Item 9), new paper gasket (Figure 7, Item 4), access cover (Figure 7, Item 3), six new lockwashers (Figure 7, Item 2), and cap screws (Figure 7, Item 1).
10. Raise trailer with lifting device and remove support stand. Lower trailer to ground.

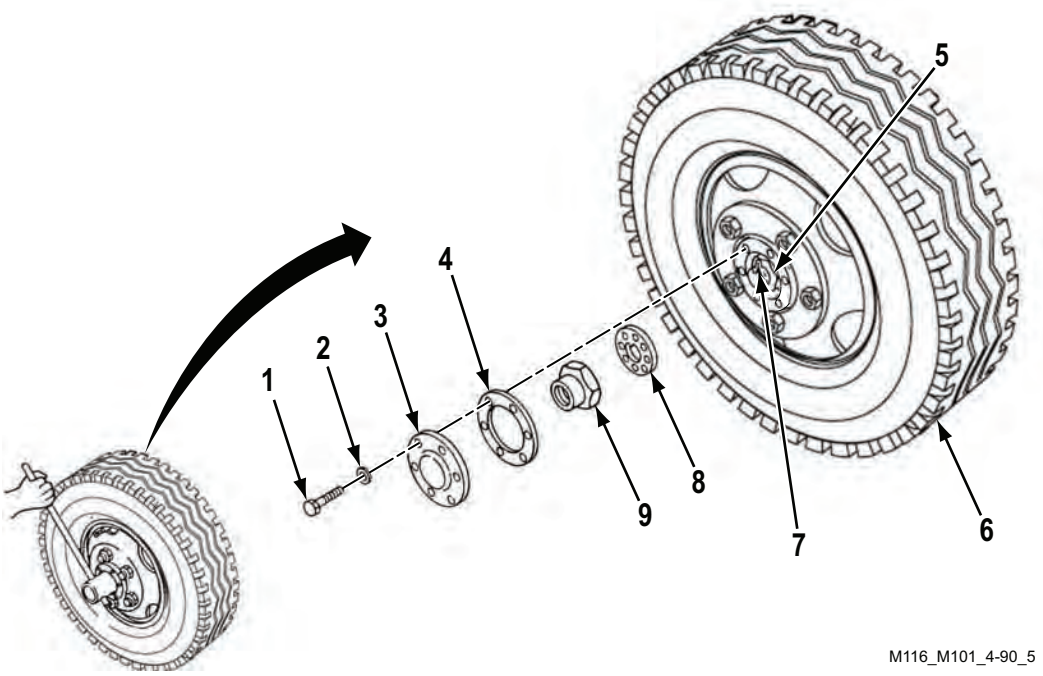

Figure 7. Wheel Bearing Adjustment.

END OF TASK

END OF WORK PACKAGE

FIELD MAINTENANCE
WHEEL ASSEMBLY MAINTENANCE

INITIAL SETUP:

References
TM 9-2610-200-14

To remove tire from wheel, to repair tire, or to repair wheel and run flat assembly (M101A3 and M116A3), refer to TM 9-2610-200-14, Operators, Unit, Direct Support, and General Maintenance Manual for Care, Maintenance, Repair and Inspection of Pneumatic Tires and Inner Tubes (This item is included on EM 0178).

END OF TASK

END OF WORK PACKAGE

FIELD MAINTENANCE
FRAME ASSEMBLY MAINTENANCE

INITIAL SETUP:

References
TB 9-2300-247-40

Refer to TB 9-2300-247-40, Tactical Wheeled Vehicles: Repair of Frames (This item is included on EM 0178), for instructions on frame assembly repair.

END OF TASK

END OF WORK PACKAGE

FIELD MAINTENANCE
SPRING HANGER MAINTENANCE

INITIAL SETUP:

Tools and Special Tools
- Tool Kit, General Mechanic's (WP 0115, Table 1, Item 1)
- Wrench, Torque (WP 0115, Table 1, Item 2)
- Wrench, Torque (WP 0115, Table 1, Item 3)

Materials/Parts
- Eight self-locking nuts (4 for rear spring hanger, 4 for front spring hanger) (WP 0096, Figure 15, Item 10)
- Self-locking nut (front spring hanger) (WP 0097, Figure 16, Item 11)
- Two cotter pins

Materials/Parts (cont.)
- (M101A1, M101A3, M116A1, M116A2) (WP 0099, Figure 18, Item 1)
- Two cotter pins (M116A3) (WP 0099, Figure 18, Item 1)
- Two lubrication fittings (WP 0099, Figure 18, Item 3)
- Degreasing solvent (WP 0114, Table 1, Item 9)
- Rag, wiping (WP 0114, Table 1, Item 24)

References
- WP 0077

WARNING


Trailer must be supported by blocking or support stands placed under axle or frame throughout maintenance procedure. Failure to comply may result in death or injury to personnel. Seek medical attention in the event of an injury.

FRONT SPRING HANGER REMOVAL

1. Place lifting device under vehicle on side where front spring hanger (Figure 1, Item 1) is being removed. Use lifting device to raise trailer. Place suitable support under front corner of vehicle.
2. Lower vehicle until weight of trailer rests on support at the front corner. Some weight will be on lifting device.

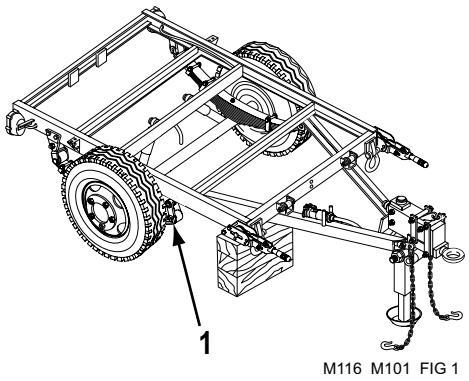

Figure 1. Trailer Support.

FRONT SPRING HANGER REMOVAL - Continued

3. Remove cotter pin (Figure 2, Item 3), slotted nut (Figure 2, Item 2), and shackle pin (Figure 2, Item 13) from spring (Figure 2, Item 11) and front spring hanger (Figure 2, Item 1). Remove lubrication fitting (Figure 2, Item 12) from shackle pin (Figure 2, Item 13). Discard cotter pin (Figure 2, Item 3) and lubrication fitting (Figure 2, Item 12).
4. Lower lifting device until spring (Figure 2, Item 11) is clear of front spring hanger (Figure 2, Item 1).
5. Remove self-locking nut (Figure 2, Item 7) and cap screw (Figure 2, Item 10) from drawbar (Figure 2, Item 9) and front spring hanger (Figure 2, Item 1). Discard self-locking nut (Figure 2, Item 7).
6. Remove four self-locking nuts (Figure 2, Item 6), washers (Figure 2, Item 5), and cap screws (Figure 2, Item 8) and front spring hanger (Figure 2, Item 1) from frame (Figure 2, Item 4). Discard self-locking nuts (Figure 2, Item 6).

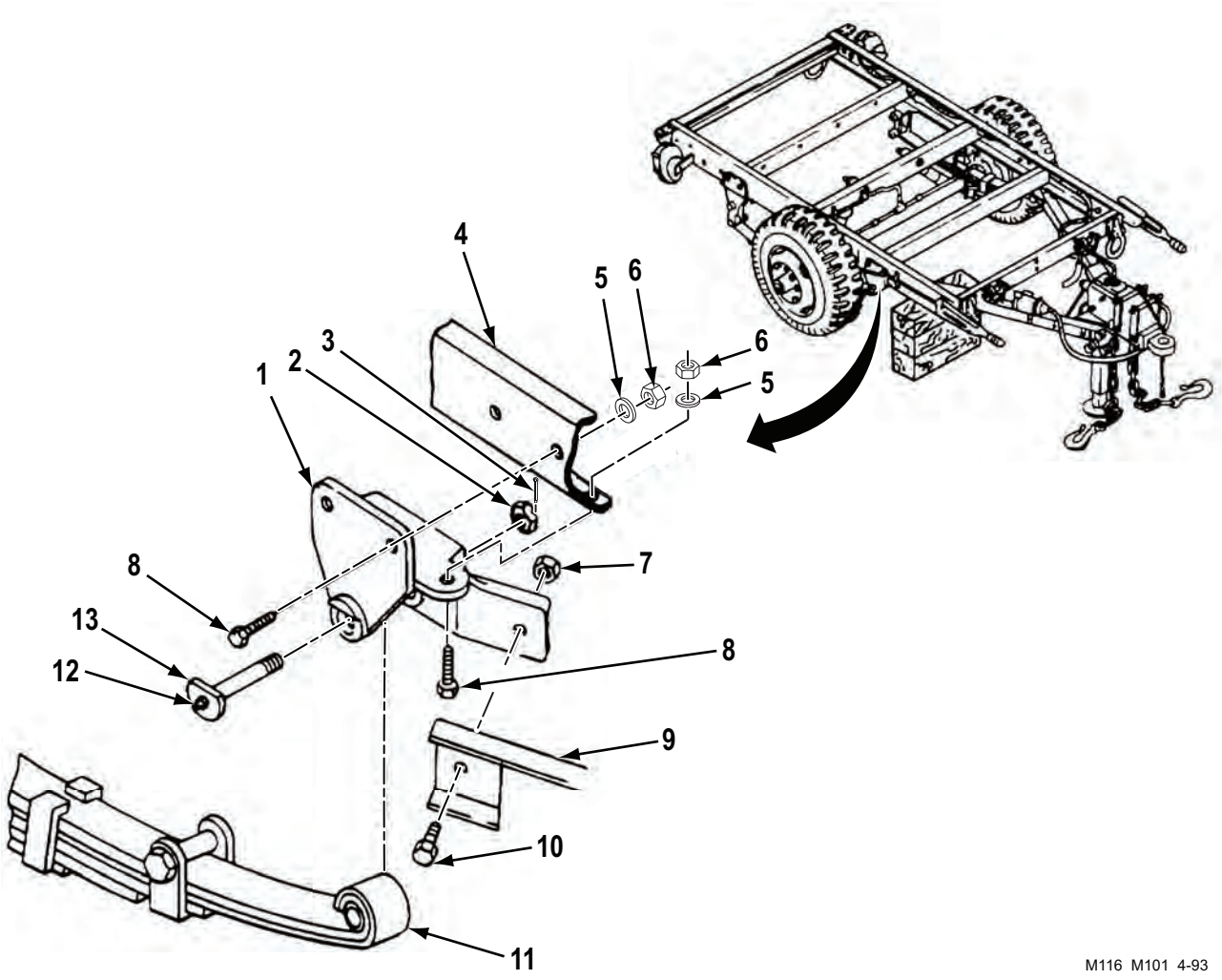

Figure 2. Front Spring Hanger Removal.

END OF TASK

REAR SPRING HANGER REMOVAL

1. Place lifting device under vehicle on side where rear spring hanger (Figure 3, Item 10) is being removed. Use lifting device to raise trailer. Place suitable support under rear corner of vehicle.
2. Lower vehicle until weight of trailer rests on support at the rear corner. Some weight will be on lifting device.
3. Remove cotter pin (Figure 3, Item 4), slotted nut (Figure 3, Item 5), and shackle pin (Figure 3, Item 7) from shackle (Figure 3, Item 6) and rear spring hanger (Figure 3, Item 10). Remove lubrication fitting (Figure 3, Item 8) from shackle pin (Figure 3, Item 7). Discard cotter pin (Figure 3, Item 4) and lubrication fitting (Figure 3, Item 8).
4. Lower lifting device until shackle (Figure 3, Item 6) is clear of rear spring hanger (Figure 3, Item 10).
5. Remove four self-locking nuts (Figure 3, Item 3), washers (Figure 3, Item 2), and cap screws (Figure 3, Item 9) and rear spring hanger (Figure 3, Item 10) from frame (Figure 3, Item 1). Discard self-locking nuts (Figure 3, Item 3).

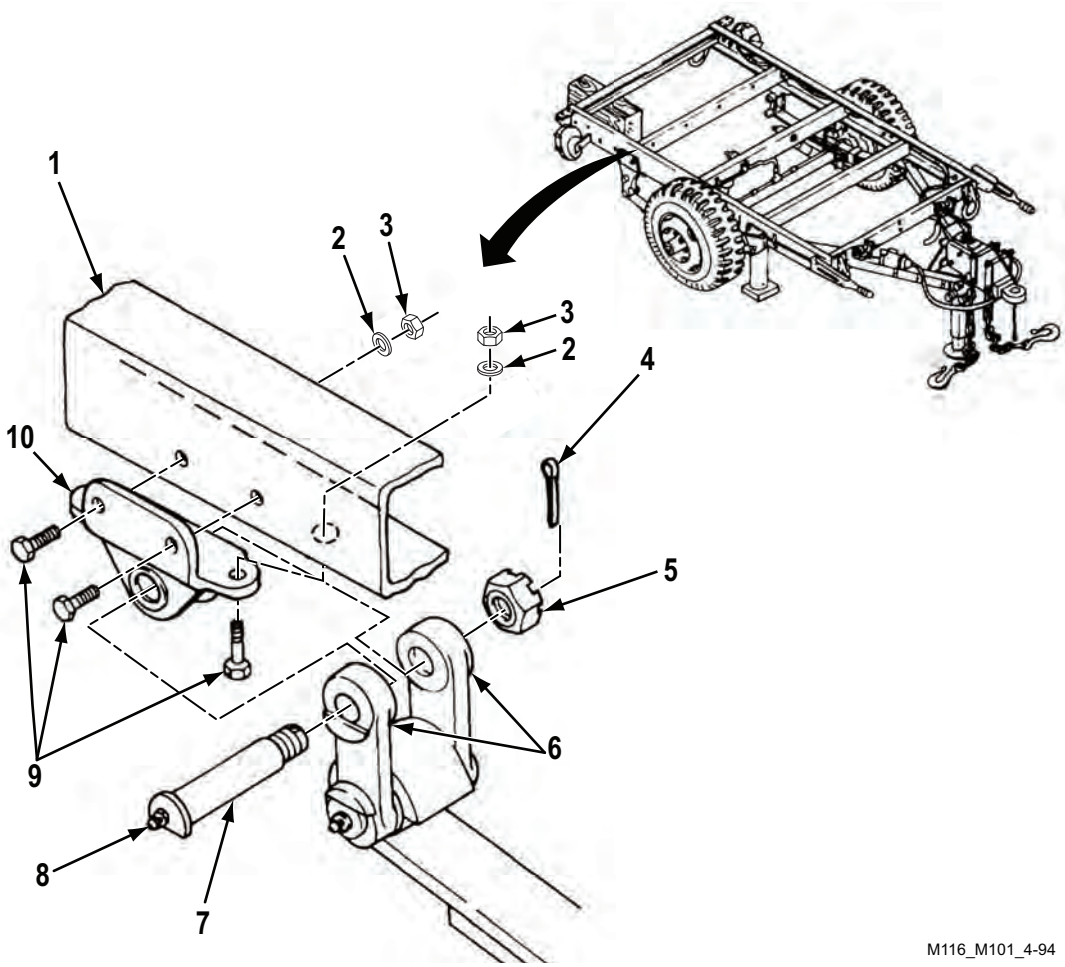

Figure 3. Rear Spring Hanger Removal.

REAR SPRING HANGER REMOVAL - Continued

NOTE

Remove bushing only if damaged.

6. Remove bushing (Figure 4, Item 2) from rear spring hanger (Figure 4, Item 1).

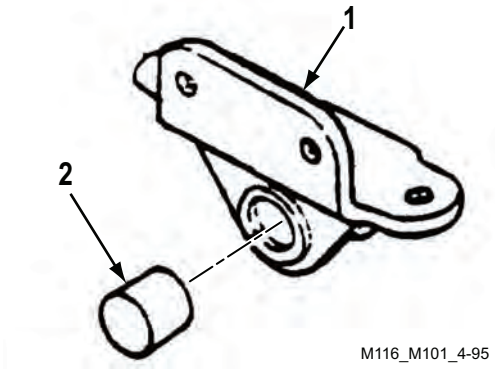

Figure 4. Bushing Removal.

END OF TASK

CLEANING AND INSPECTION

WARNING


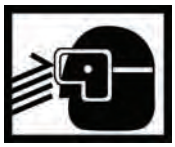

- Solvent cleaning compound MIL-PRF-680 may be irritating to the eyes and skin. Use protective gloves and goggles. First aid for skin contact: remove contaminated clothing. Wash skin thoroughly with soap and water. First aid for eye contact: flush with water until irritation subsides. If symptoms persist, seek medical attention. Failure to comply may result in death or injury to personnel. Seek medical attention in the event of an injury.
- Use solvent cleaning compound MIL-PRF-680 in a well ventilated area. Use respirator as needed. Accidental ingestion can cause irritation of digestive tract and respiratory tract. May cause lung and central nervous system damage. Can be fatal if swallowed. Inhalation of high/massive concentrations can cause coma or be fatal. First aid for ingestion: do not induce vomiting. Seek immediate medical attention. First aid for inhalation: move to fresh air. If not breathing, provide artificial respiration. If symptoms persist, seek medical attention. Failure to comply may result in death or injury to personnel. Seek medical attention in the event of an injury.
- MIL-PRF-680 solvent is combustible; DO NOT use or store near heat, sparks, flame, or other ignition sources. Use mechanical ventilation whenever product is used in a confined space, heated above ambient temperatures, or agitated. Keep container sealed when not in use. Failure to comply may result in death or injury to personnel. Seek medical attention in the event of an injury.
- Improper cleaning methods and use of unauthorized cleaning liquids or solvents can injure personnel and damage equipment. Failure to comply may result in death or injury to personnel. Seek medical attention in the event of an injury.
- Rags saturated with solvent cleaning compound must be disposed of IAW authorized facility procedures. Failure to comply may result in death or injury to personnel. Seek medical attention in the event of an injury.
- Solvent cleaning compound MIL-PRF-680 is toxic and flammable. Always wear protective goggles and gloves, and use only in a well-ventilated area. Avoid contact with skin, eyes, and clothes, and DO NOT breathe vapors. DO NOT use near open flame or excessive heat. Failure to comply may result in death or injury to personnel. Seek medical attention in the event of an injury.

1. Clean all removed components with cleaning solvent and soft cloth rag and allow to dry. Make sure lubrication passages in shackle pins are free of grease.
2. Inspect all removed components for cracks, breaks, corrosion, and damaged threads. Replace if damaged.

END OF TASK

REAR SPRING HANGER INSTALLATION

1. If removed, install bushing (Figure 5, Item 2) in rear spring hanger (Figure 5, Item 1).

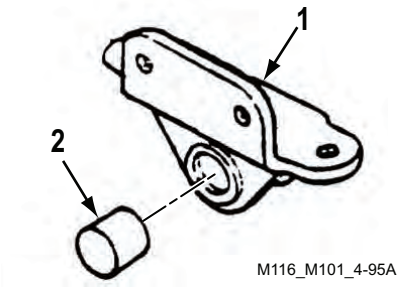

Figure 5. Bushing Installation.

2. Install rear spring hanger (Figure 6, Item 10) on frame (Figure 6, Item 1) with four cap screws (Figure 6, Item 9), washers (Figure 6, Item 2), and new self-locking nuts (Figure 6, Item 3). Torque self-locking nuts (Figure 6, Item 3) to 30 lb-ft (41 N•m).
3. Use lifting device to raise vehicle until shackle (Figure 6, Item 6) is aligned with rear spring hanger (Figure 6, Item 10).
4. Install shackle pin (Figure 6, Item 7) through shackle (Figure 6, Item 6) and rear spring hanger (Figure 6, Item 10).
5. Install slotted nut (Figure 6, Item 5) on shackle (Figure 6, Item 6) and tighten. Install new cotter pin (Figure 6, Item 4) on shackle (Figure 6, Item 6).
6. Install new lubrication fitting (Figure 6, Item 8) in shackle pin (Figure 6, Item 7).
7. Remove support from rear corner of vehicle. Remove lifting device from under vehicle.

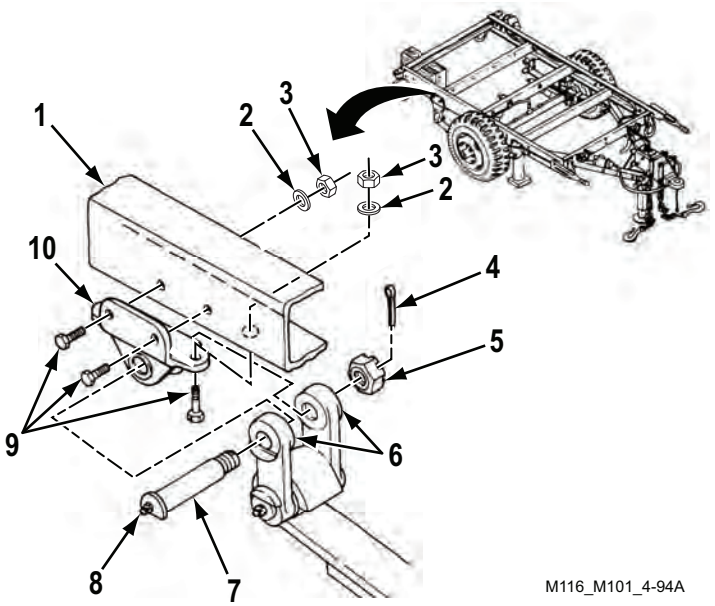

Figure 6. Rear Spring Hanger Installation.

END OF TASK

FRONT SPRING HANGER INSTALLATION

1. Install front spring hanger (Figure 7, Item 1) on frame (Figure 7, Item 4) with four cap screws (Figure 7, Item 8), washers (Figure 7, Item 5), and new self-locking nuts (Figure 7, Item 6). Torque self-locking nuts (Figure 7, Item 6) to 30 lb-ft (41 N•m).
2. Install drawbar (Figure 7, Item 9) on front spring hanger (Figure 7, Item 1) with cap screw (Figure 7, Item 10) and new self-locking nut (Figure 7, Item 7). Torque self-locking nut (Figure 7, Item 7) between 140 – 150 lb-ft (190 – 203 N•m).
3. Use lifting device to raise vehicle until spring (Figure 7, Item 11) is aligned with front spring hanger (Figure 7, Item 1).
4. Install shackle pin (Figure 7, Item 13) through spring (Figure 7, Item 11) and front spring hanger (Figure 7, Item 1).
5. Install slotted nut (Figure 7, Item 2) on shackle pin (Figure 7, Item 13) and tighten. Install new cotter pin (Figure 7, Item 3) on shackle pin (Figure 7, Item 13).
6. Install new lubrication fitting (Figure 7, Item 12) in shackle pin (Figure 7, Item 13).
7. Remove support from front corner of vehicle. Remove lifting device from under vehicle.

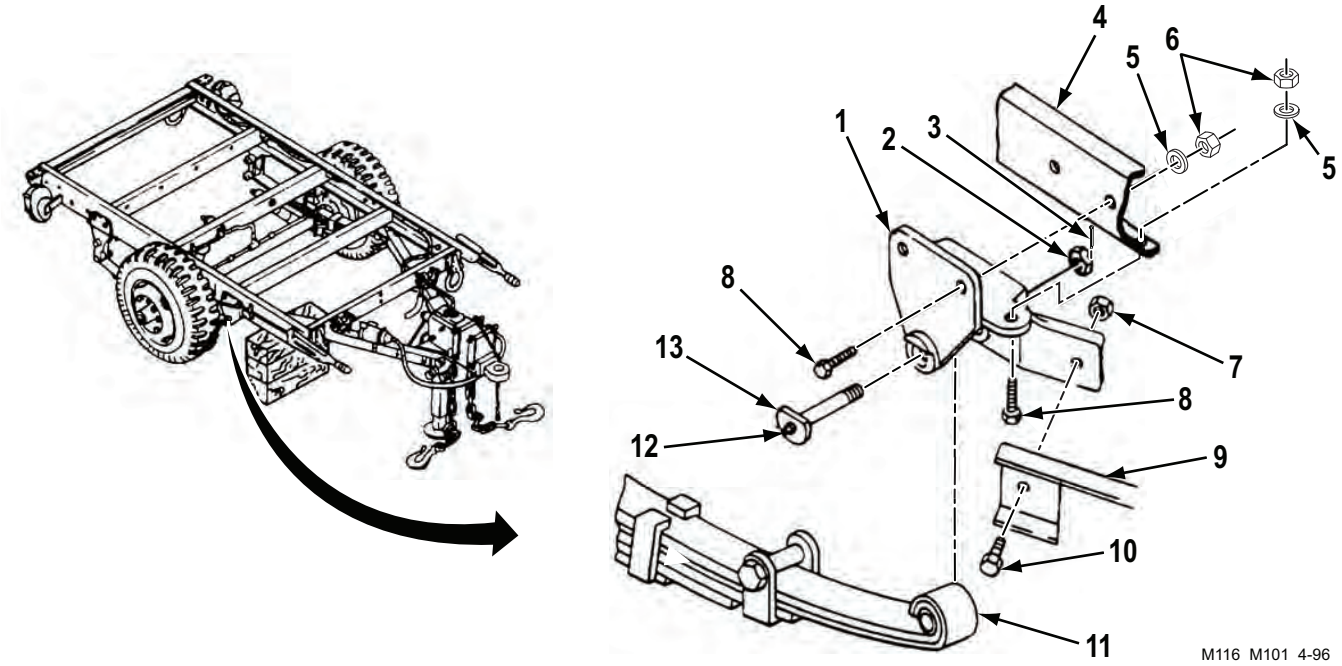

Figure 7. Front Spring Hanger Installation.

END OF TASK

FOLLOW ON TASK

Lubricate shackle pins (WP 0077).

END OF TASK

END OF WORK PACKAGE

FIELD MAINTENANCE
LIFT SHACKLE REPLACEMENT

INITIAL SETUP:

Tools and Special Tools
Tool Kit, General Mechanic's
(WP 0115, Table 1, Item 1)

Materials/Parts
Cotter pin (WP 0096, Figure 15, Item 7)
Self-locking nut (WP 0096, Figure 15, Item 7)

REMOVAL

1. On the M101A2 and M116A2, remove cotter pin (Figure 1, Item 6), straight headed pin (Figure 1, Item 5), and lift shackle (Figure 1, Item 3) from bracket (Figure 1, Item 1). Discard cotter pin (Figure 1, Item 6).
2. On the M101A3 and M116A3, remove self-locking nut (Figure 1, Item 4), cap screw (Figure 1, Item 2), and lift shackle (Figure 1, Item 3) from bracket (Figure 1, Item 1). Discard self-locking nut (Figure 1, Item 4).

END OF TASK

INSTALLATION

1. On the M101A2 and M116A2, install lift shackle (Figure 1, Item 3) on bracket (Figure 1, Item 1) with straight headed pin (Figure 1, Item 5) and new cotter pin (Figure 1, Item 6).
2. On the M101A3 and M116A3, install lift shackle (Figure 1, Item 3) on bracket (Figure 1, Item 1) with cap screw (Figure 1, Item 2) and new self-locking nut (Figure 1, Item 4).

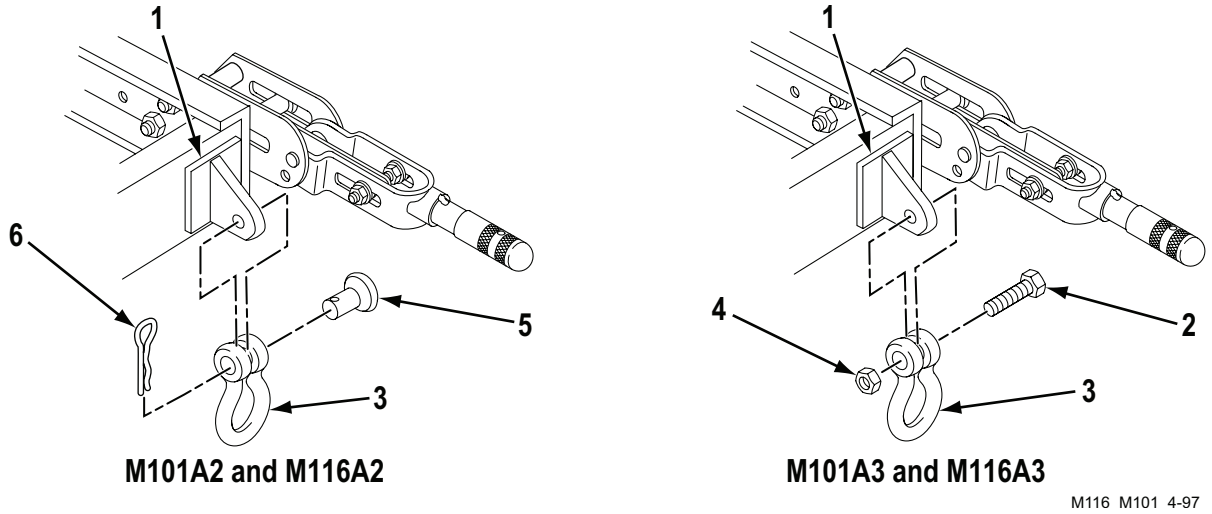

Figure 1. Lift Shackle Replacement.

END OF TASK

END OF WORK PACKAGE

FIELD MAINTENANCE
TOW SHACKLE REPLACEMENT

INITIAL SETUP:

Tools and Special Tools
Tool Kit, General Mechanic's
(WP 0115, Table 1, Item 1)

Materials/Parts
Two self-locking nuts
(WP 0097, Figure 16, Item 1)

REMOVAL

1. Remove self-locking nut (Figure 1, Item 3), cap screw (Figure 1, Item 1), and spacer (Figure 1, Item 2) from tow shackle (Figure 1, Item 6) and drawbar (Figure 1, Item 7). Discard self-locking nut (Figure 1, Item 3).
2. Remove self-locking nut (Figure 1, Item 4) and tow shackle (Figure 1, Item 6) from frame (Figure 1, Item 5). Discard self-locking nut (Figure 1, Item 4).

END OF TASK

INSTALLATION

1. Install tow shackle (Figure 1, Item 6) on frame (Figure 1, Item 5) with new self-locking nut (Figure 1, Item 4).
2. Install spacer (Figure 1, Item 2), cap screw (Figure 1, Item 1), and new self-locking nut (Figure 1, Item 3) on tow shackle (Figure 1, Item 6) and drawbar (Figure 1, Item 7).

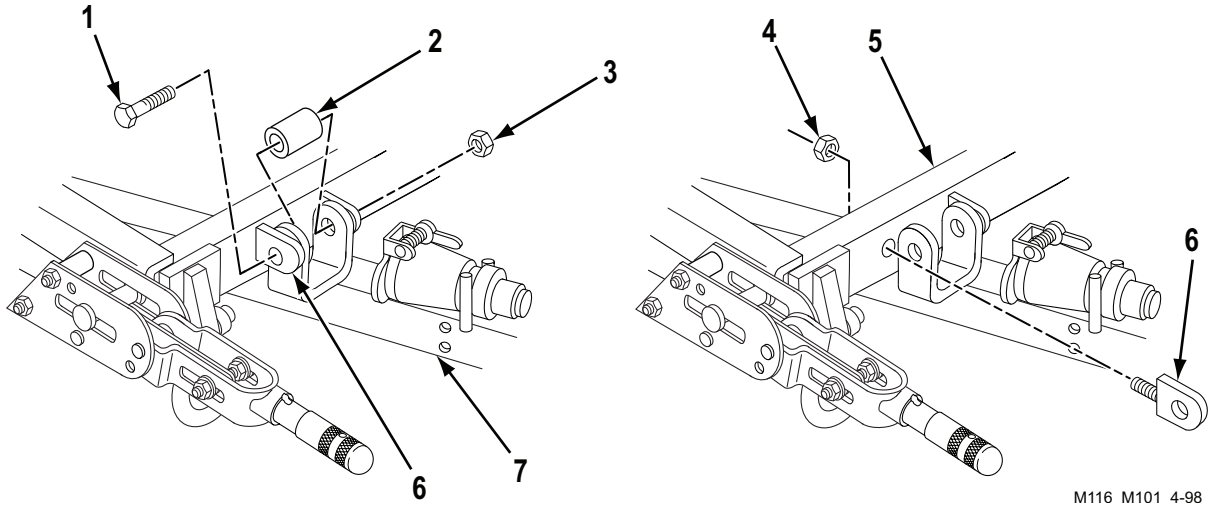

Figure 1. Tow Shackle Replacement.

END OF TASK

END OF WORK PACKAGE

FIELD MAINTENANCE
DRAWBAR REPLACEMENT

INITIAL SETUP:

Tools and Special Tools
Tool Kit, General Mechanic's (WP 0115, Table 1, Item 1)
Wrench, Torque (WP 0115, Table 1, Item 2)
Wrench, Torque (WP 0115, Table 1, Item 3)

Materials/Parts
Self-locking nut (WP 0097, Figure 16, Item 1)
Self-locking nut (WP 0097, Figure 16, Item 4)

References
WP 0072

Equipment Condition
Hydraulic brake actuator assembly removed (as applicable) (WP 0050)

Equipment Condition (cont.)
Fixed front support leg removed (as applicable) (WP 0062)
Intervehicular cable removed from roadside drawbar (WP 0041)
Chassis wiring harness removed from roadside drawbar, if removing roadside drawbar (WP 0040)
Hydraulic brake lines removed from curbside drawbar, if removing curbside drawbar (WP 0052)

WARNING


Trailer must be supported by blocking or support stands placed under axle or frame throughout maintenance procedure. Failure to comply may result in death or injury to personnel. Seek medical attention in the event of an injury.

NOTE

The procedure for removing and installing drawbars is the same for roadside and curbside.

REMOVAL

1. Raise trailer and place suitable support at rear corners and at midpoint of vehicle.

REMOVAL - Continued

2. Place lifting device under drawbar (Figure 1, Item 5) being removed.
3. Remove self-locking nut (Figure 1, Item 2) and cap screw (Figure 1, Item 3) from drawbar (Figure 1, Item 5) and front spring hanger (Figure 1, Item 1). Discard self-locking nut (Figure 1, Item 2).
4. Remove self-locking nut (Figure 1, Item 7), cap screw (Figure 1, Item 4), and spacer (Figure 1, Item 6) from drawbar (Figure 1, Item 5) and two tow shackles (Figure 1, Item 8). Discard self-locking nut (Figure 1, Item 7).
5. Pull drawbar (Figure 1, Item 5) forward, away from vehicle, and remove.
6. If replacing drawbar (Figure 1, Item 5), remove data plate.

END OF TASK

INSTALLATION

1. If removed, install data plate.
2. Position drawbar (Figure 1, Item 5) under frame and support with lifting device.
3. Loosely install drawbar (Figure 1, Item 5) on two tow shackles (Figure 1, Item 8) with spacer (Figure 1, Item 6), cap screw (Figure 1, Item 4), and new self-locking nut (Figure 1, Item 7). Torque self-locking nut (Figure 1, Item 7) between 35 – 40 lb-ft (47 – 54 N•m).
4. Loosely install drawbar (Figure 1, Item 5) on front spring hanger (Figure 1, Item 1) with cap screw (Figure 1, Item 3) and new self-locking nut (Figure 1, Item 2). Torque self-locking nut (Figure 1, Item 2) between 140 – 150 lb-ft (190 – 203 N•m).
5. Remove supports from rear of vehicle.

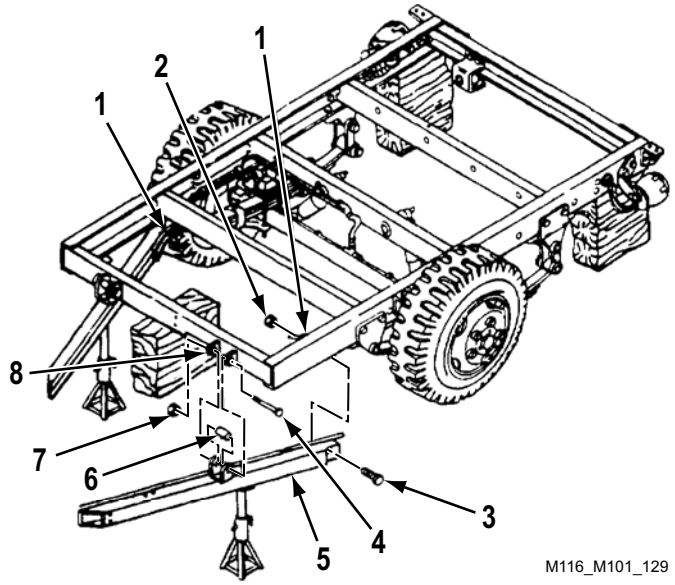

Figure 1. Drawbar Replacement.

END OF TASK

FOLLOW ON TASK

1. Install hydraulic brake lines on curbside drawbar, if installing curbside drawbar (WP 0052).
2. Install chassis wiring harness on roadside drawbar, if installing roadside drawbar (WP 0040).
3. Install intervehicular cable on roadside drawbar (WP 0041).
4. Install hydraulic brake actuator assembly if removed (WP 0050).
5. Install fixed front support leg if removed (WP 0062).

END OF TASK

END OF WORK PACKAGE

FIELD MAINTENANCE
ADJUSTABLE FRONT SUPPORT LEG MAINTENANCE (OLD STYLE)

INITIAL SETUP:

Tools and Special Tools
Tool Kit, General Mechanic's
(WP 0115, Table 1, Item 1)

Materials/Parts
Two self-locking nuts
(WP 0097, Figure 16, Item 1)
Four self-locking nuts
(WP 0097, Figure 16, Item 11)
Self-locking nut (WP 0097, Figure 16, Item 13)
Cotter pin (WP 0097, Figure 16, Item 15)
Self-locking nut
(WP 0097, Figure 16, Item 23)

Materials/Parts (cont.)
Brush, wire (WP 0114, Table 1, Item 4)
Degreasing solvent
(WP 0114, Table 1, Item 9)
Oil, lubricating
(WP 0114, Table 1, Item 21)
Rag, wiping (WP 0114, Table 1, Item 24)

References
TM 43-0139

WARNING


Trailer must be supported by blocking or support stands placed under axle or frame throughout maintenance procedure. Failure to comply may result in death or injury to personnel. Seek medical attention in the event of an injury.

REMOVAL

1. Raise trailer with lifting device. Position suitable supports (Figure 1, Item 3) under both drawbars (Figure 1, Item 4). Lower and remove lifting device.
2. Remove cotter pin (Figure 1, Item 8), nut (Figure 1, Item 17), and drawbar ring (Figure 1, Item 15). Discard cotter pin (Figure 1, Item 8).
3. Remove two self-locking nuts (Figure 1, Item 10), cap screws (Figure 1, Item 13), and support leg (Figure 1, Item 12). Discard self-locking nuts (Figure 1, Item 10).
4. Remove self-locking nut (Figure 1, Item 16), bolt (Figure 1, Item 9), and bracket (Figure 1, Item 11). Discard self-locking nut (Figure 1, Item 16).
5. Remove self-locking nut (Figure 1, Item 1), cap screw (Figure 1, Item 6), and safety chains (Figure 1, Items 7 and 18). Discard self-locking nut (Figure 1, Item 1).
6. Remove four self-locking nuts (Figure 1, Item 2), cap screws (Figure 1, Item 5), and drawbar bracket assembly (Figure 1, Item 14). Discard self-locking nuts (Figure 1, Item 2).

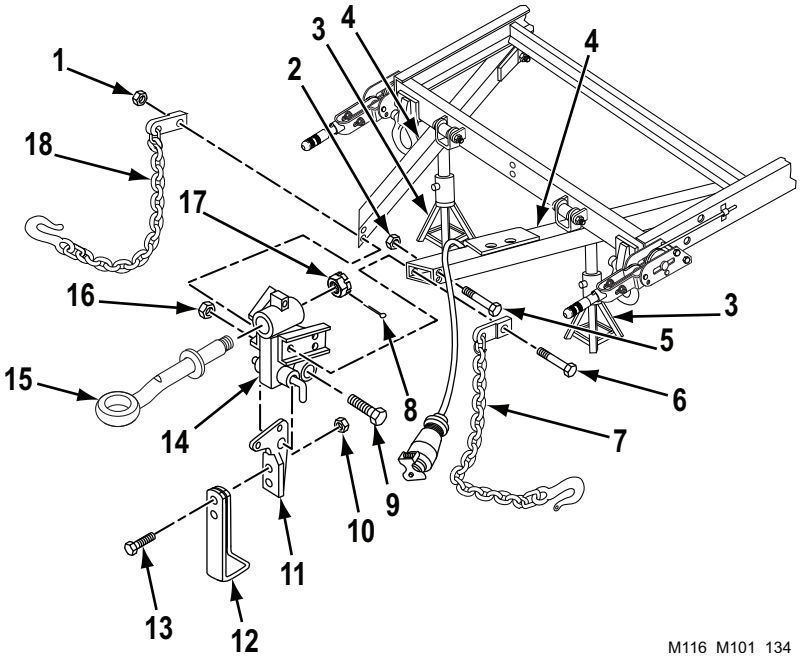

Figure 1. Adjustable Front Support Leg Removal.

END OF TASK

CLEANING AND INSPECTION

WARNING


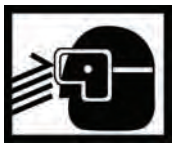

- Solvent cleaning compound MIL-PRF-680 may be irritating to the eyes and skin. Use protective gloves and goggles. First aid for skin contact: remove contaminated clothing. Wash skin thoroughly with soap and water. First aid for eye contact: flush with water until irritation subsides. If symptoms persist, seek medical attention. Failure to comply may result in death or injury to personnel. Seek medical attention in the event of an injury.
- Use solvent cleaning compound MIL-PRF-680 in a well ventilated area. Use respirator as needed. Accidental ingestion can cause irritation of digestive tract and respiratory tract. May cause lung and central nervous system damage. Can be fatal if swallowed. Inhalation of high/massive concentrations can cause coma or be fatal. First aid for ingestion: do not induce vomiting. Seek immediate medical attention. First aid for inhalation: move to fresh air. If not breathing, provide artificial respiration. If symptoms persist, seek medical attention. Failure to comply may result in death or injury to personnel. Seek medical attention in the event of an injury.
- MIL-PRF-680 solvent is combustible; DO NOT use or store near heat, sparks, flame, or other ignition sources. Use mechanical ventilation whenever product is used in a confined space, heated above ambient temperatures, or agitated. Keep container sealed when not in use. Failure to comply may result in death or injury to personnel. Seek medical attention in the event of an injury.
- Improper cleaning methods and use of unauthorized cleaning liquids or solvents can injure personnel and damage equipment. Failure to comply may result in death or injury to personnel. Seek medical attention in the event of an injury.
- Rags saturated with solvent cleaning compound must be disposed of IAW authorized facility procedures. Failure to comply may result in death or injury to personnel. Seek medical attention in the event of an injury.
- Solvent cleaning compound MIL-PRF-680 is toxic and flammable. Always wear protective goggles and gloves, and use only in a well-ventilated area. Avoid contact with skin, eyes, and clothes, and DO NOT breathe vapors. DO NOT use near open flame or excessive heat. Failure to comply may result in death or injury to personnel. Seek medical attention in the event of an injury.

1. Use wire brush to remove all corrosion.
2. Clean all components with cleaning solvent and soft cloth rag and allow to dry.
3. Touch up paint, refer to TM 43-0139.
4. Use lubricating oil to coat mating surfaces of drawbars, drawbar ring, and drawbar bracket assembly.
5. Inspect all components for wear, cracks, broken welds, and other damage. Replace if damaged.

END OF TASK

INSTALLATION

1. Install drawbar bracket assembly (Figure 2, Item 14), four cap screws (Figure 2, Item 5), and new self-locking nuts (Figure 2, Item 2).
2. Install safety chains (Figure 2, Items 7 and 18), cap screw (Figure 2, Item 6), and new self-locking nut (Figure 2, Item 1).
3. Install bracket (Figure 2, Item 11), bolt (Figure 2, Item 9), and new self-locking nut (Figure 2, Item 16).
4. Install support leg (Figure 2, Item 12), two cap screws (Figure 2, Item 13), and new self-locking nuts (Figure 2, Item 10).
5. Install drawbar ring (Figure 2, Item 15), nut (Figure 2, Item 17), and new cotter pin (Figure 2, Item 8).
6. Raise trailer with lifting device and remove supports (Figure 2, Item 3) from drawbars (Figure 2, Item 4). Lower trailer to ground.

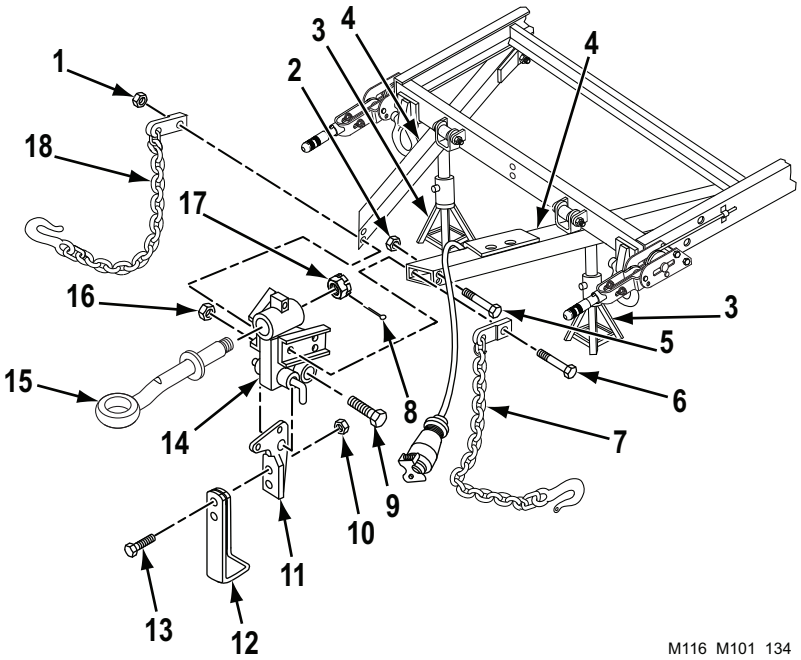

Figure 2. Adjustable Front Support Leg Installation.

END OF TASK

END OF WORK PACKAGE

FIELD MAINTENANCE
ADJUSTABLE FRONT SUPPORT LEG MAINTENANCE

INITIAL SETUP:

Tools and Special Tools
Tool Kit, General Mechanic's
(WP 0115, Table 1, Item 1)

Materials/Parts
Self-locking nut (WP 0098, Figure 17, Item 1)
Cotter pin (WP 0098, Figure 17, Item 9)

Materials/Parts (cont.)
Degreasing solvent
(WP 0114, Table 1, Item 9)
Grease, automotive and artillery
(WP 0114, Table 1, Item 10)
Rag, wiping
(WP 0114, Table 1, Item 24)

WARNING


Trailer must be supported by blocking or support stands placed under axle or frame throughout maintenance procedure. Failure to comply may result in death or injury to personnel. Seek medical attention in the event of an injury.

REMOVAL

1. Place lifting device under both drawbars (Figure 1, Item 1) to support front of trailer.
2. Remove self-locking nut (Figure 1, Item 13) and cap screw (Figure 1, Item 2) from adjustable front support leg (Figure 1, Item 5) and drawbar bracket assembly (Figure 1, Item 12). Discard self-locking nut (Figure 1, Item 13).
3. Pull out release lever (Figure 1, Item 11) and remove adjustable front support leg (Figure 1, Item 5) from drawbar bracket assembly (Figure 1, Item 12).

END OF TASK

DISASSEMBLY

1. Remove hand crank (Figure 1, Item 6) from stowage bracket (Figure 1, Item 9) by removing cotter pin (Figure 1, Item 8) from stowage bracket (Figure 1, Item 9).
2. If damaged, remove cotter pin (Figure 1, Item 8) from chain (Figure 1, Item 7). Discard cotter pin (Figure 1, Item 8).
3. Remove two screws (Figure 1, Item 10) and cap (Figure 1, Item 4) from adjustable front support leg (Figure 1, Item 5).

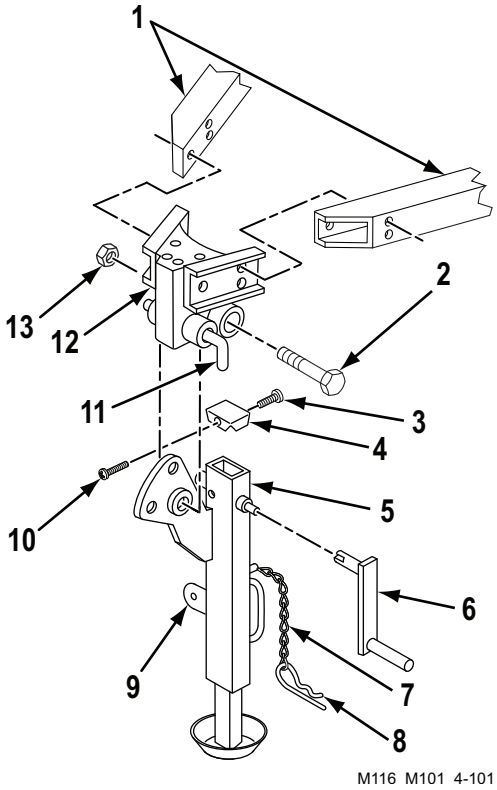

Figure 1. Adjustable Front Support Leg Removal.

END OF TASK

CLEANING AND INSPECTION

WARNING


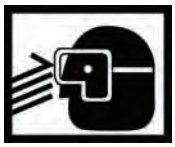

- Solvent cleaning compound MIL-PRF-680 may be irritating to the eyes and skin. Use protective gloves and goggles. First aid for skin contact: remove contaminated clothing. Wash skin thoroughly with soap and water. First aid for eye contact: flush with water until irritation subsides. If symptoms persist, seek medical attention. Failure to comply may result in death or injury to personnel. Seek medical attention in the event of an injury.
- Use solvent cleaning compound MIL-PRF-680 in a well ventilated area. Use respirator as needed. Accidental ingestion can cause irritation of digestive tract and respiratory tract. May cause lung and central nervous system damage. Can be fatal if swallowed. Inhalation of high/massive concentrations can cause coma or be fatal. First aid for ingestion: do not induce vomiting. Seek immediate medical attention. First aid for inhalation: move to fresh air. If not breathing, provide artificial respiration. If symptoms persist, seek medical attention. Failure to comply may result in death or injury to personnel. Seek medical attention in the event of an injury.
- MIL-PRF-680 solvent is combustible; DO NOT use or store near heat, sparks, flame, or other ignition sources. Use mechanical ventilation whenever product is used in a confined space, heated above ambient temperatures, or agitated. Keep container sealed when not in use. Failure to comply may result in death or injury to personnel. Seek medical attention in the event of an injury.
- Improper cleaning methods and use of unauthorized cleaning liquids or solvents can injure personnel and damage equipment. Failure to comply may result in death or injury to personnel. Seek medical attention in the event of an injury.
- Rags saturated with solvent cleaning compound must be disposed of IAW authorized facility procedures. Failure to comply may result in death or injury to personnel. Seek medical attention in the event of an injury.
- Solvent cleaning compound MIL-PRF-680 is toxic and flammable. Always wear protective goggles and gloves, and use only in a well-ventilated area. Avoid contact with skin, eyes, and clothes, and DO NOT breathe vapors. DO NOT use near open flame or excessive heat. Failure to comply may result in death or injury to personnel. Seek medical attention in the event of an injury.

1. Clean all removed components with cleaning solvent and soft cloth rag and allow to dry.
2. Inspect all components for wear, cracks, broken welds, or corrosion. Replace if damaged.

END OF TASK

ASSEMBLY

1. Fill cavity of adjustable front support leg (Figure 2, Item 5) with grease. Install cap (Figure 2, Item 4) on adjustable front support leg (Figure 2, Item 5) with two screws (Figure 2, Item 3).
2. If removed, install new cotter pin (Figure 2, Item 8) on chain (Figure 2, Item 7).

END OF TASK

INSTALLATION

1. Pullout release lever (Figure 2, Item 11) and position adjustable front support leg (Figure 2, Item 5) at drawbar bracket assembly (Figure 2, Item 12). Push in release lever (Figure 2, Item 11) to hold leg (Figure 2, Item 5).
2. Install cap screw (Figure 2, Item 2) and new self-locking nut (Figure 2, Item 13) on adjustable front support leg (Figure 2, Item 5) and drawbar bracket assembly (Figure 2, Item 12).
3. Use hand crank (Figure 2, Item 6) to make sure adjustable front support leg (Figure 2, Item 5) is in fully lowered position. Push in release lever (Figure 2, Item 11) to lock it in position.
4. Stow hand crank (Figure 2, Item 6) on stowage bracket (Figure 2, Item 9) with cotter pin (Figure 2, Item 8).
5. Remove lifting devices from both drawbars (Figure 2, Item 1).

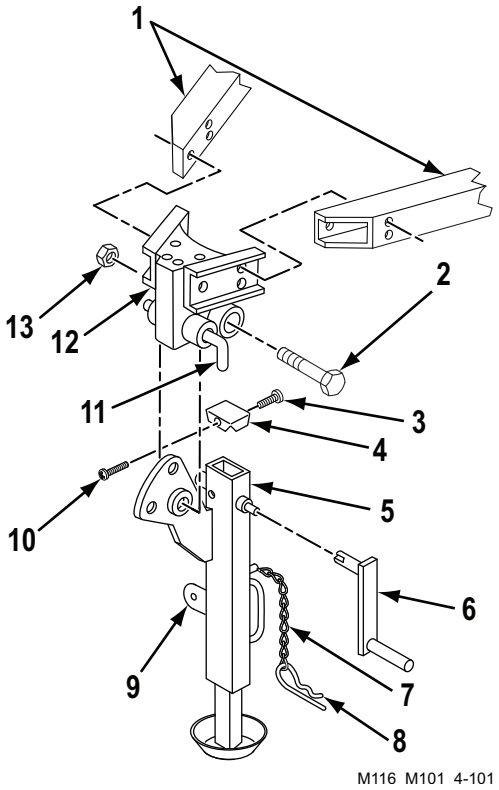

Figure 2. Adjustable Front Support Leg Installation.

END OF TASK

END OF WORK PACKAGE

FIELD MAINTENANCE
SAFETY CHAINS REPLACEMENT

INITIAL SETUP:

Tools and Special Tools
Tool Kit, General Mechanic's
(WP 0115, Table 1, Item 1)
Wrench, Torque (WP 0115, Table 1, Item 3)

Materials/Parts
Self-locking nut
(WP 0097, Figure 16, Item 13)

NOTE

Mounting cap screw for safety chains passes through hydraulic brake actuator assembly components.

REMOVAL

Remove self-locking nut (Figure 1, Item 5), cap screw (Figure 1, Item 1), and two safety chains (Figure 1, Item 2) from two drawbars (Figure 1, Item 3) and drawbar bracket assembly (Figure 1, Item 4). Discard self-locking nut (Figure 1, Item 5).

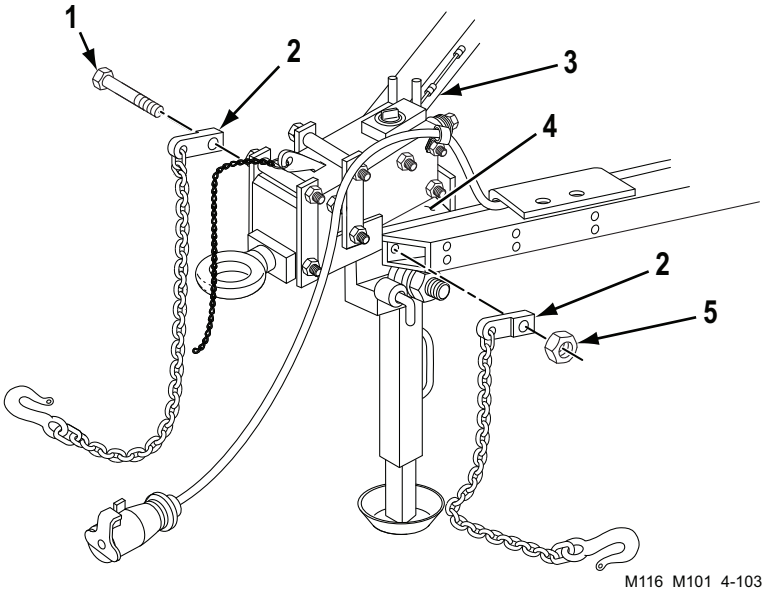

Figure 1. Safety Chain Removal.

END OF TASK

INSTALLATION

Install two safety chains (Figure 1, Item 2) on two drawbars Figure 1, Item 3) and drawbar bracket assembly (Figure 1, Item 4) with cap screw (Figure 1, Item 1) and new self-locking nut (Figure 1, Item 5). Torque self-locking nut (Figure 1, Item 5) between 165 – 175 lb-ft (224 – 237 N•m).

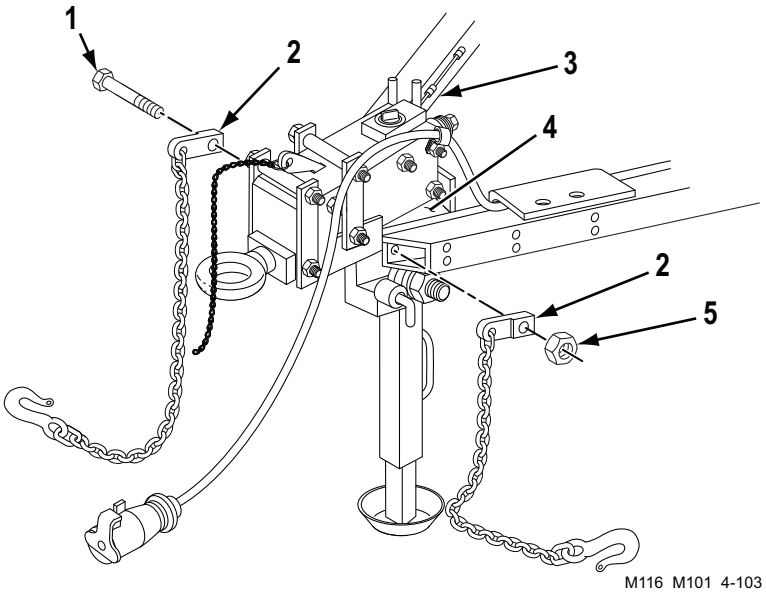

Figure 2. Safety Chain Installation.

END OF TASK

END OF WORK PACKAGE

FIELD MAINTENANCE
SPRING ASSEMBLY MAINTENANCE

INITIAL SETUP:

Tools and Special Tools
Tool Kit, General Mechanic's
(WP 0115, Table 1, Item 1)

Materials/Parts
Three cotter pins (WP 0099, Figure 18, Item 1)
Three lubrication fittings
(WP 0099, Figure 18, Item 3)
Four self-locking nuts
(WP 0099, Figure 18, Item 9)
Degreasing solvent

Materials/Parts (cont.)
(WP 0114, Table 1, Item 9)
Rag, wiping
(WP 0114, Table 1, Item 24)

Personnel Required
Two

References
WP 0077

Equipment Condition
Wheel assembly removed (WP 0034)

WARNING


- Spring weighs over 100 lb (45 kg). Use suitable lifting device. Failure to comply may result in death or injury to personnel. Seek medical attention in the event of an injury.
- Trailer must be supported by blocking or support stands placed under axle or frame throughout maintenance procedure. Failure to comply may result in death or injury to personnel. Seek medical attention in the event of an injury.

REMOVAL

1. Place lifting device under axle (Figure 1, Item 12), raise trailer, and place suitable support at rear of trailer.
2. Lower axle (Figure 1, Item 12) until weight of trailer rests on support at rear of trailer. Some weight will be on lifting device.
3. Remove four self-locking nuts (Figure 1, Item 11) and washers (Figure 1, Item 10), two U-bolts (Figure 1, Item 16), and bumper (Figure 1, Item 15) from axle (Figure 1, Item 12) and spring assembly (Figure 1, Item 13). Discard self-locking nuts (Figure 1, Item 11).
4. Remove screw (Figure 1, Item 6) from handbrake cable clip (Figure 1, Item 5) on frame (Figure 1, Item 4).
5. Lower axle (Figure 1, Item 12) approximately 4 inches (10 cm) to take weight off spring assembly (Figure 1, Item 13).

WARNING

Spring weighs over 100 lb (45 kg). Use suitable lifting device. Failure to comply may result in death or injury to personnel. Seek medical attention in the event of an injury.

6. At rear spring hanger (Figure 1, Item 17), remove cotter pin (Figure 1, Item 19), slotted nut (Figure 1, Item 20), and shackle pin (Figure 1, Item 9) from two shackles (Figure 1, Items 7 and 18) and, with the aid of an assistant, remove spring assembly (Figure 1, Item 13). Discard cotter pin (Figure 1, Item 19).
7. At front spring hanger (Figure 1, Item 2), remove cotter pin (Figure 1, Item 1), slotted nut (Figure 1, Item 14), and shackle pin (Figure 1, Item 3) from front spring hanger (Figure 1, Item 2) and spring assembly (Figure 1, Item 13). Discard cotter pin (Figure 1, Item 1).
8. Remove spring assembly (Figure 1, Item 13) from frame (Figure 1, Item 4).

END OF TASK

DISASSEMBLY

NOTE

Shackle pin should fit in rear spring hanger with slight resistance.

1. At rear spring hanger (Figure 1, Item 17), check play between shackle pin (Figure 1, Item 8) and rear spring hanger (Figure 1, Item 17). Looseness indicates a damaged shackle pin (Figure 1, Item 8) inside rear spring hanger (Figure 1, Item 17).
2. Remove cotter pin (Figure 1, Item 22), slotted nut (Figure 1, Item 21), shackle pin (Figure 1, Item 8), and two shackles (Figure 1, Items 7 and 18) from rear spring hanger (Figure 1, Item 17). Discard cotter pin (Figure 1, Item 22).

DISASSEMBLY - Continued

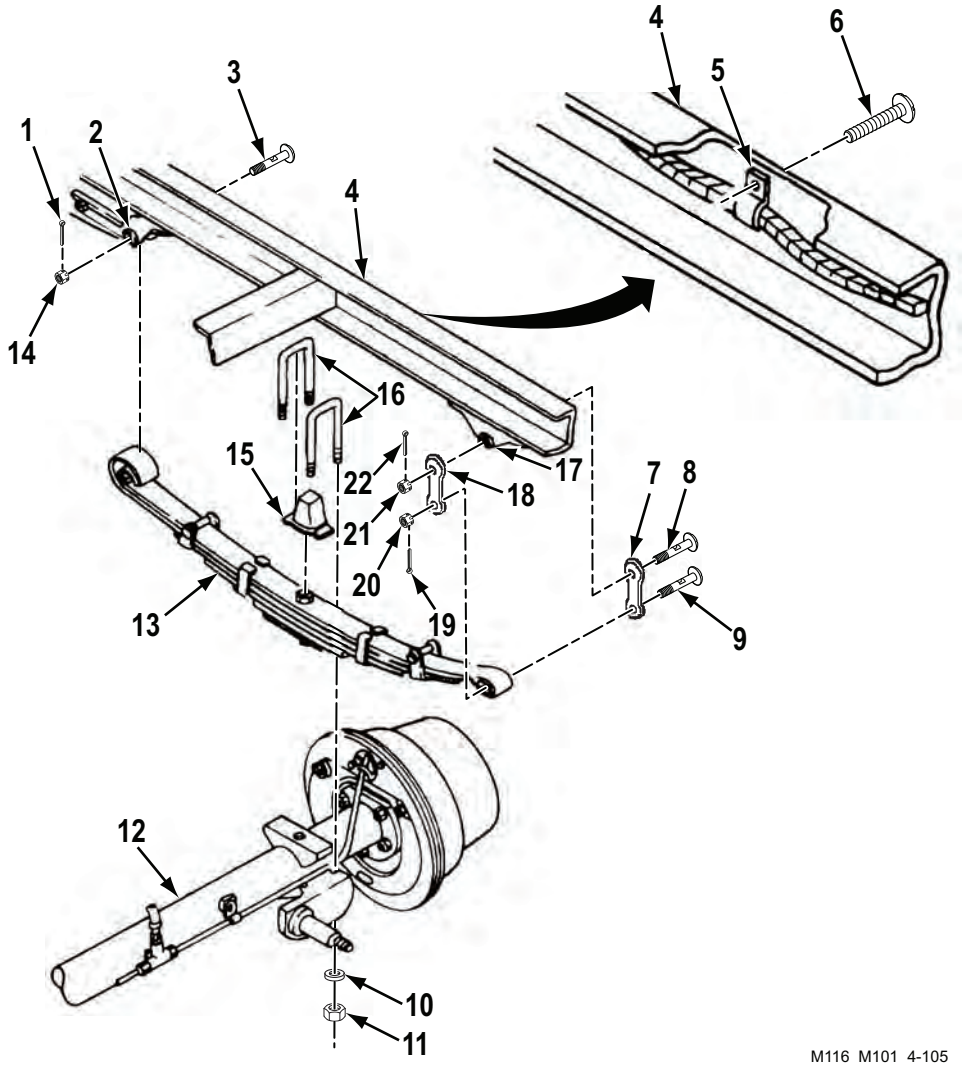

Figure 1. Spring Assembly Removal.

3. Remove lubrication fitting (Figure 2, Item 4) from each of three shackle pins (Figure 2, Items 1, 2, and 3). Discard lubrication fittings (Figure 2, Item 4).

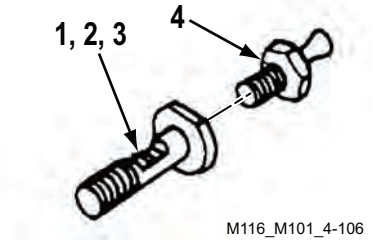

Figure 2. Lubrication Fitting Removal.

END OF TASK

CLEANING AND INSPECTION

WARNING


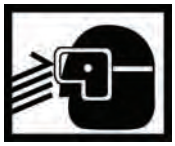

- Solvent cleaning compound MIL-PRF-680 may be irritating to the eyes and skin. Use protective gloves and goggles. First aid for skin contact: remove contaminated clothing. Wash skin thoroughly with soap and water. First aid for eye contact: flush with water until irritation subsides. If symptoms persist, seek medical attention. Failure to comply may result in death or injury to personnel. Seek medical attention in the event of an injury.
- Use solvent cleaning compound MIL-PRF-680 in a well ventilated area. Use respirator as needed. Accidental ingestion can cause irritation of digestive tract and respiratory tract. May cause lung and central nervous system damage. Can be fatal if swallowed. Inhalation of high/massive concentrations can cause coma or be fatal. First aid for ingestion: do not induce vomiting. Seek immediate medical attention. First aid for inhalation: move to fresh air. If not breathing, provide artificial respiration. If symptoms persist, seek medical attention. Failure to comply may result in death or injury to personnel. Seek medical attention in the event of an injury.
- MIL-PRF-680 solvent is combustible; DO NOT use or store near heat, sparks, flame, or other ignition sources. Use mechanical ventilation whenever product is used in a confined space, heated above ambient temperatures, or agitated. Keep container sealed when not in use. Failure to comply may result in death or injury to personnel. Seek medical attention in the event of an injury.
- Improper cleaning methods and use of unauthorized cleaning liquids or solvents can injure personnel and damage equipment. Failure to comply may result in death or injury to personnel. Seek medical attention in the event of an injury.
- Rags saturated with solvent cleaning compound must be disposed of IAW authorized facility procedures. Failure to comply may result in death or injury to personnel. Seek medical attention in the event of an injury.
- Solvent cleaning compound MIL-PRF-680 is toxic and flammable. Always wear protective goggles and gloves, and use only in a well-ventilated area. Avoid contact with skin, eyes, and clothes, and DO NOT breathe vapors. DO NOT use near open flame or excessive heat. Failure to comply may result in death or injury to personnel. Seek medical attention in the event of an injury.

1. Clean all removed components with cleaning solvent and soft cloth rag and allow to dry. Make sure lubrication passages in shackle pins are clear.
2. Inspect all removed components for cracks, breaks, corrosion, or damaged threads. Replace if damaged.

END OF TASK

ASSEMBLY

Loosely install two shackles (Figure 3, Items 4 and 15) on rear spring hanger (Figure 3, Item 7) with shackle pin (Figure 3, Item 5) and slotted nut (Figure 3, Item 14).

END OF TASK

INSTALLATION

WARNING

Spring weighs over 100 lb (45 kg). Use suitable lifting device. Failure to comply may result in death or injury to personnel. Seek medical attention in the event of an injury.

1. Position spring assembly (Figure 3, Item 11) above axle (Figure 3, Item 8).
2. At front spring hanger (Figure 3, Item 1), loosely install spring assembly (Figure 3, Item 11) on frame (Figure 3, Item 3) with shackle pin (Figure 3, Item 2) and slotted nut (Figure 3, Item 12).
3. At rear spring hanger (Figure 3, Item 7), loosely install spring assembly (Figure 3, Item 11) on two shackles (Figure 3, Items 4 and 15) with shackle pin (Figure 3, Item 6) and slotted nut (Figure 3, Item 13).
4. Use lifting device to raise axle (Figure 3, Item 8) until it contacts underside of spring assembly (Figure, 3, Item 11). Engage spring assembly center bolt head (Figure 3, Item 10) with hole in spring mounting pad (Figure 3, Item 9).

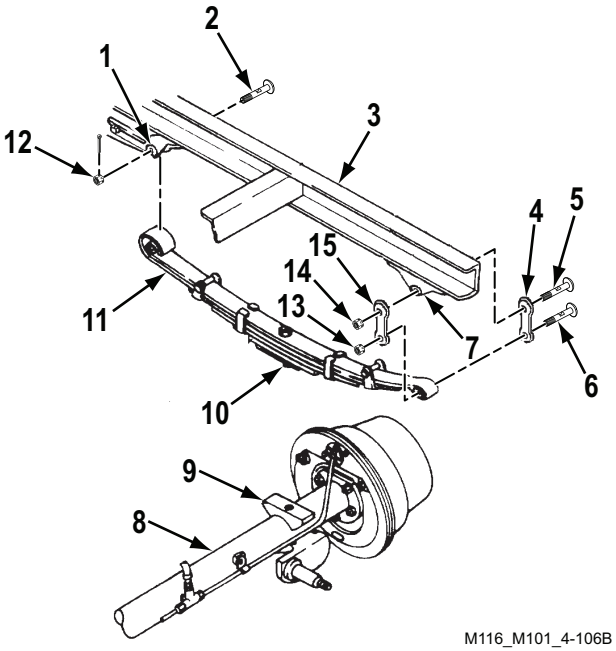

Figure 3. Spring Assembly Installation.

INSTALLATION - Continued

5. Install bumper (Figure 4, Item 2) on spring assembly (Figure 4, Item 15). Install two U-bolts (Figure 4, Item 3) into grooves of bumper (Figure 4, Item 2) and through holes in spring plate (Figure 4, Item 10).
6. Install four washers (Figure 4, Item 11) and new self-locking nuts (Figure 4, Item 12) on two U-bolts (Figure 4, Item 3).
7. Tighten slotted nuts (Figure 4, Items 6, 8, and 16).
8. Align holes for three cotter pins (Figure 4, Items 1, 5, and 9) with slots in slotted nuts (Figure 4, Items 6, 8, and 16) and install three new cotter pins (Figure 4, Items 1, 5, and 9).
9. Install new lubrication fitting (Figure 4, Item 7) in each of three shackle pins (Figure 4, Items 13, 14, and 17).
10. Install screw (Figure 4, Item 18) into handbrake cable clip (Figure 4, Item 19) on frame (Figure 4, Item 4) and tighten.

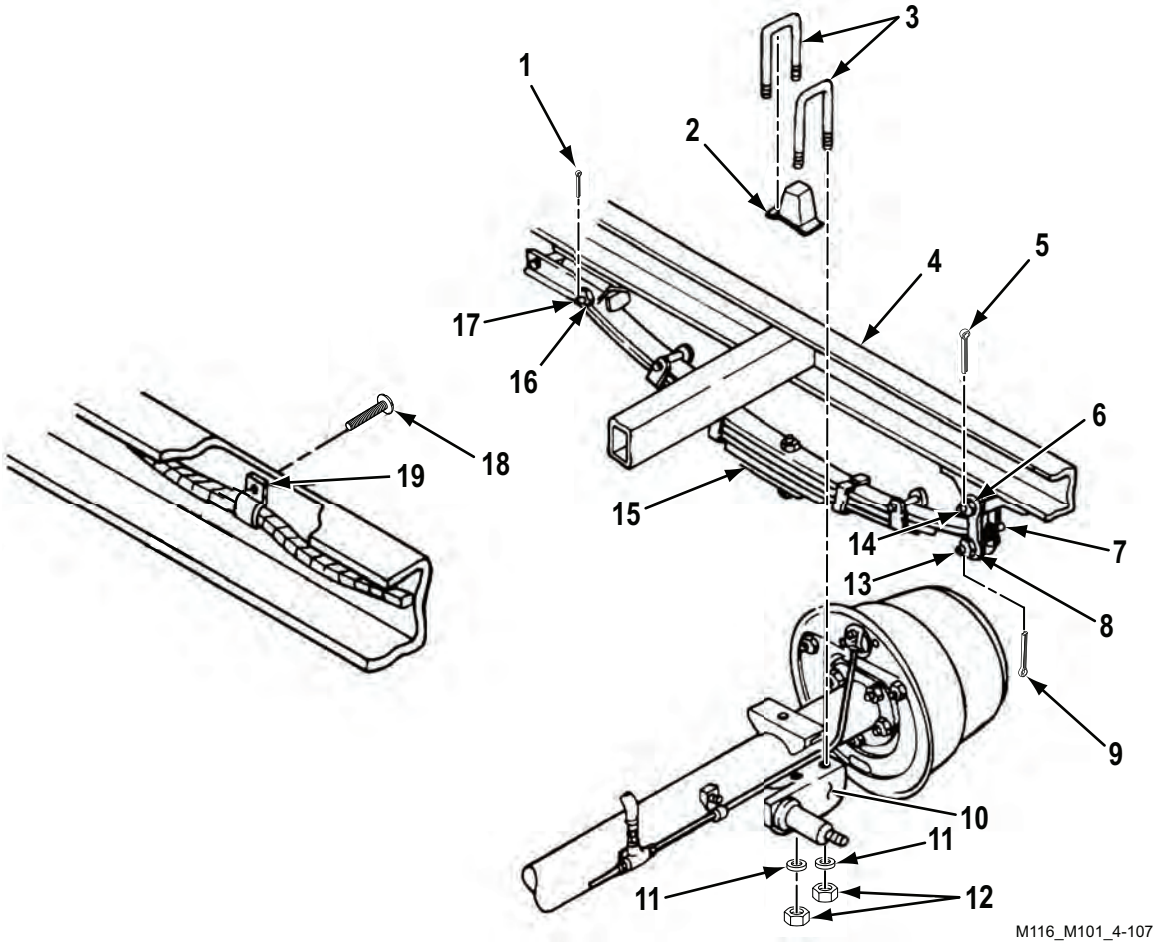

Figure 4. Bumper and Lubrication Fittings Installation.

END OF TASK

FOLLOW ON TASK

1. Lubricate shackle pins (WP 0077).
2. Install wheel assembly (WP 0034).

END OF TASK

END OF WORK PACKAGE

FIELD MAINTENANCE
SHOCK ABSORBERS MAINTENANCE

INITIAL SETUP:

Tools and Special Tools
Tool Kit, General Mechanic's
(WP 0115, Table 1, Item 1)
Wrench, Torque (WP 0115, Table 1, Item 2)

Materials/Parts
Two self-locking nuts

Materials/Parts (cont.)
(WP 0100, Figure 19, Item 3)
Detergent, general purpose
(WP 0114, Table 1, Item 8)
Degreasing solvent
(WP 0114, Table 1, Item 9)
Rag, wiping
(WP 0114, Table 1, Item 24)

WARNING


Trailer must be supported by blocking or support stands placed under axle or frame throughout maintenance procedure. Failure to comply may result in death or injury to personnel. Seek medical attention in the event of an injury.

REMOVAL

1. Remove two self-locking nuts (Figure 1, Item 5) from upper and lower mounting studs (Figure 1, Items 1 and 7). Discard self-locking nuts (Figure 1, Item 5).
2. Remove two recessed washers (Figure 1, Item 4) and bushings (Figure 1, Item 3), shock absorber (Figure 1, Item 2), and two bushings (Figure 1, Item 6) from upper and lower mounting studs (Figure 1, Items 1 and 7).

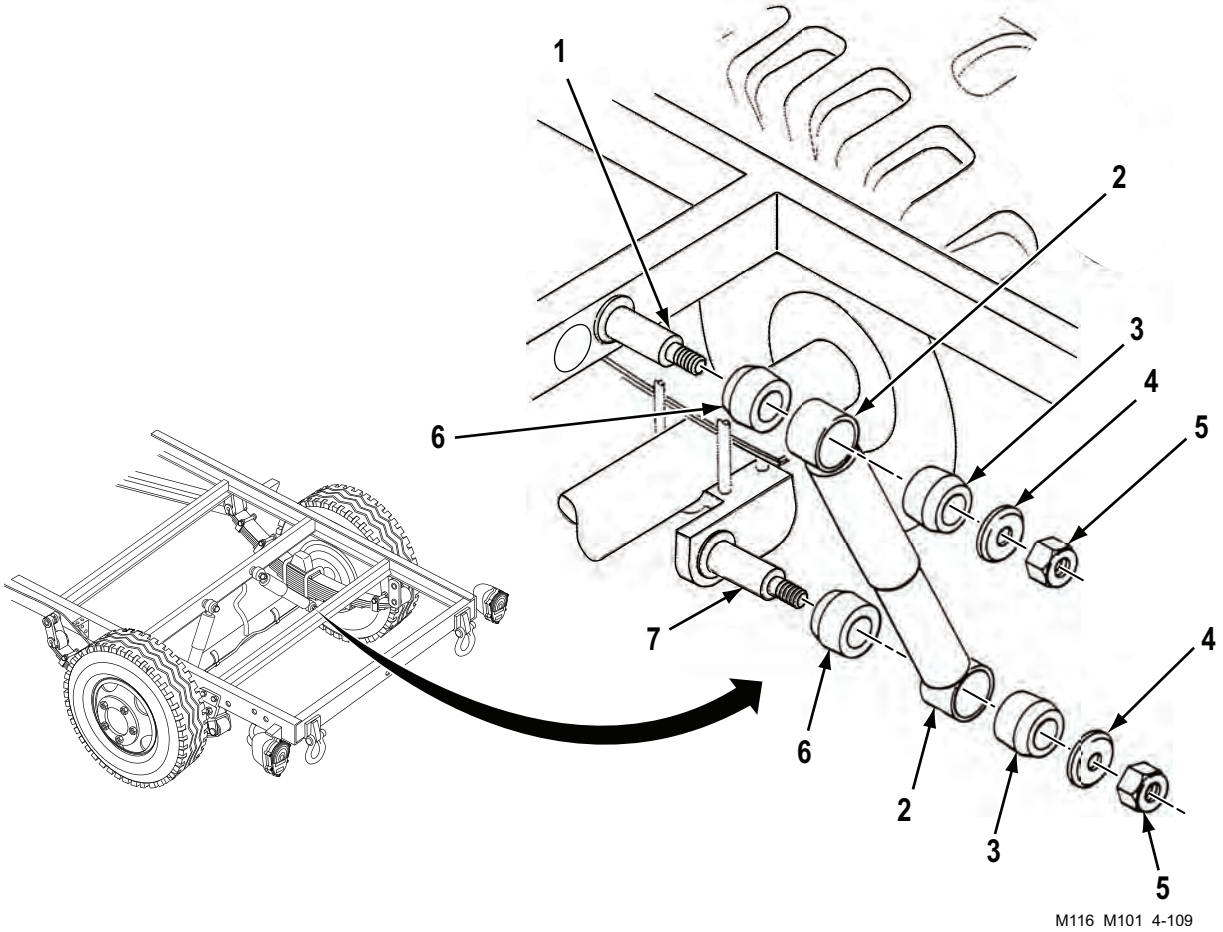

Figure 1. Shock Absorber Removal.

END OF TASK

CLEANING AND INSPECTION

WARNING


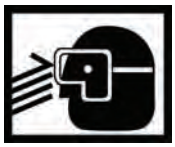

- Solvent cleaning compound MIL-PRF-680 may be irritating to the eyes and skin. Use protective gloves and goggles. First aid for skin contact: remove contaminated clothing. Wash skin thoroughly with soap and water. First aid for eye contact: flush with water until irritation subsides. If symptoms persist, seek medical attention. Failure to comply may result in death or injury to personnel. Seek medical attention in the event of an injury.
- Use solvent cleaning compound MIL-PRF-680 in a well ventilated area. Use respirator as needed. Accidental ingestion can cause irritation of digestive tract and respiratory tract. May cause lung and central nervous system damage. Can be fatal if swallowed. Inhalation of high/massive concentrations can cause coma or be fatal. First aid for ingestion: do not induce vomiting. Seek immediate medical attention. First aid for inhalation: move to fresh air. If not breathing, provide artificial respiration. If symptoms persist, seek medical attention. Failure to comply may result in death or injury to personnel. Seek medical attention in the event of an injury.
- MIL-PRF-680 solvent is combustible; DO NOT use or store near heat, sparks, flame, or other ignition sources. Use mechanical ventilation whenever product is used in a confined space, heated above ambient temperatures, or agitated. Keep container sealed when not in use. Failure to comply may result in death or injury to personnel. Seek medical attention in the event of an injury.
- Improper cleaning methods and use of unauthorized cleaning liquids or solvents can injure personnel and damage equipment. Failure to comply may result in death or injury to personnel. Seek medical attention in the event of an injury.
- Rags saturated with solvent cleaning compound must be disposed of IAW authorized facility procedures. Failure to comply may result in death or injury to personnel. Seek medical attention in the event of an injury.
- Solvent cleaning compound MIL-PRF-680 is toxic and flammable. Always wear protective goggles and gloves, and use only in a well-ventilated area. Avoid contact with skin, eyes, and clothes, and DO NOT breathe vapors. DO NOT use near open flame or excessive heat. Failure to comply may result in death or injury to personnel. Seek medical attention in the event of an injury.

1. Clean upper and lower mounting studs and all mounting hardware except bushings with cleaning solvent and soft cloth rag and allow to dry.
2. Clean bushings with detergent and water solution.
3. Inspect upper and lower mounting studs for cracks, bends, or bad threads. Notify Supervisor if damaged.
4. Replace all damaged components.

END OF TASK

INSTALLATION

1. Install two bushings (Figure 2, Item 6), shock absorber (Figure 2, Item 2) with thicker dust shield end at top, and two bushings (Figure 2, Item 3) on upper and lower mounting studs (Figure 2, Items 1 and 7).
2. Install two recessed washers (Figure 2, Item 4) and new self-locking nuts (Figure 2, Item 5) on upper and lower mounting studs (Figure 2, Items 1 and 7). Torque self-locking nuts (Figure 2, Item 5) between 20 – 25 lb-ft (27 – 34 N•m).

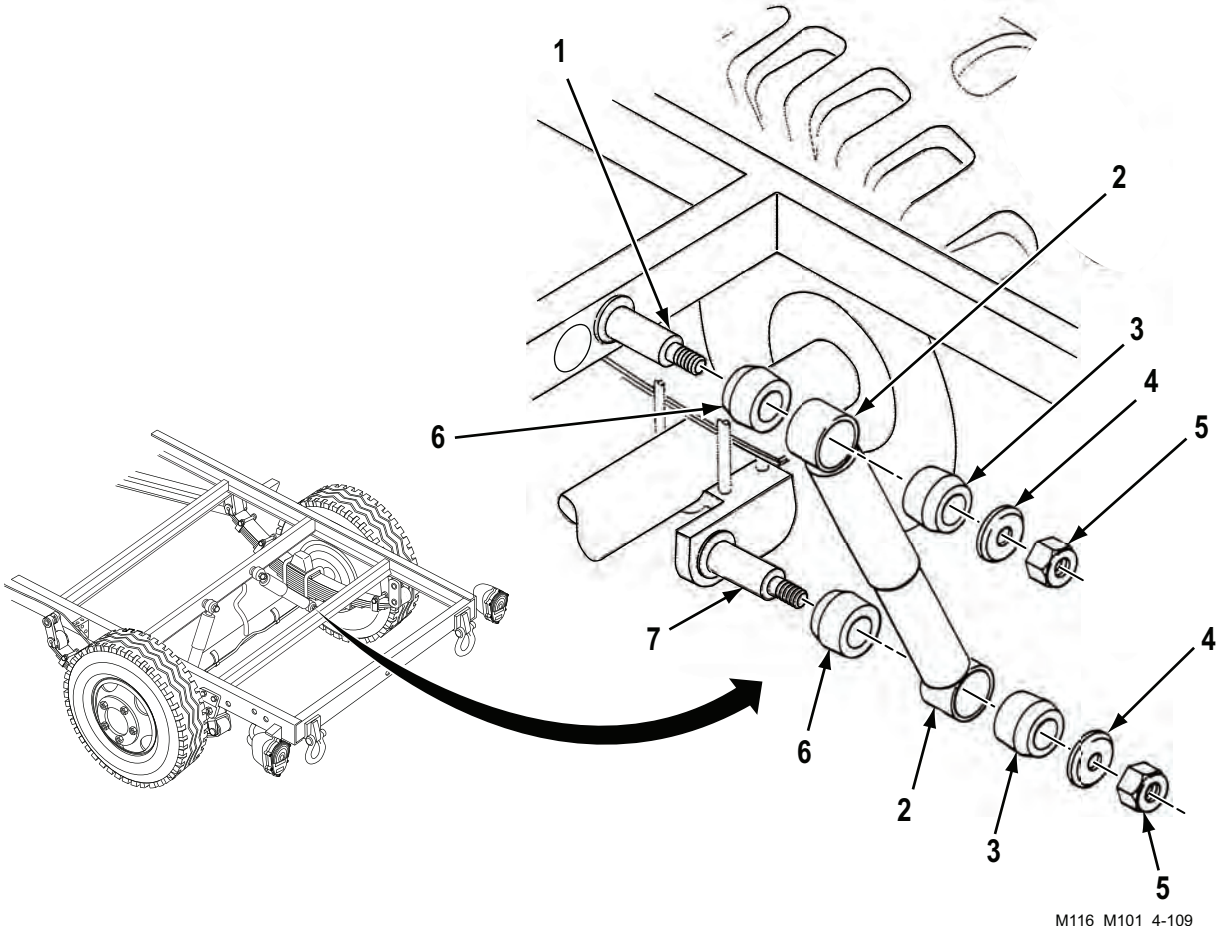

Figure 2. Shock Absorber Installation.

END OF TASK

END OF WORK PACKAGE

FIELD MAINTENANCE
CARGO BODY REPLACEMENT

INITIAL SETUP:

Tools and Special Tools
Tool Kit, General Mechanic's
(WP 0115, Table 1, Item 1)
Wrench, Torque (WP 0115, Table 1, Item 3)

Personnel Required
Two

Materials/Parts
Eighteen self-locking nuts (M101A2 and M101A3)
(WP 0101, Figure 20, Item 18)
Eighteen self-locking nuts (M101A1)
(WP 0101, Figure 20, Item 47)

WARNING

Cargo body weighs over 500 lb (226.8 kg). Use suitable lifting device. Failure to comply may result in death or injury to personnel. Seek medical attention in the event of an injury.

REMOVAL

1. Attach a suitable lifting device to cargo body (Figure 1, Item 1).
2. Remove eight self-locking nuts (Figure 1, Item 5), square neck bolts (Figure 1, Item 3), and clamps (Figure 1, Item 4) securing cargo body (Figure 1, Item 1) to frame (Figure 1, Item 2). Discard self-locking nuts (Figure 1, Item 1).

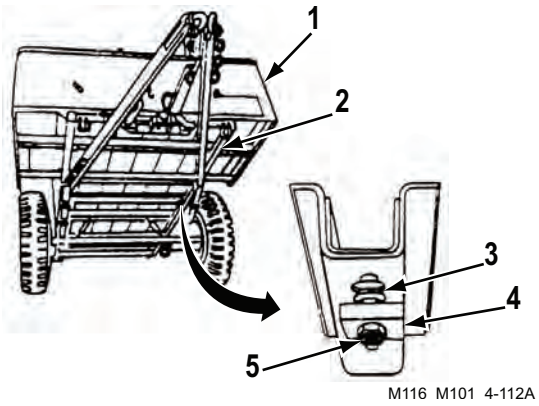

Figure 1. Clamp Removal

REMOVAL - Continued

3. At each of two rear corner mounting brackets (Figure 2, Item 13), remove two self-locking nuts (Figure 2, Item 14) and cap screws (Figure 2, Item 12) from mounting bracket (Figure 2, Item 13). Discard self-locking nuts (Figure 2, Item 14).
4. At rear chassis sill, remove self-locking nut (Figure 2, Item 10) and cap screw (Figure 2, Item 11) from cargo body (Figure 2, Item 3) and frame (Figure 2, Item 5). Discard self-locking nut (Figure 2, Item 10).
5. At each of two midchassis mounting brackets (Figure 2, Item 1), remove self-locking nut (Figure 2, Item 15) and cap screw (Figure 2, Item 2) from mounting brackets (Figure 2, Item 1). Discard self-locking nuts (Figure 2, Item 15).
6. At front chassis sill, remove three self-locking nuts (Figure 2, Item 6) and cap screws (Figure 2, Item 4) from cargo body (Figure 2, Item 3) and frame (Figure 2, Item 5). Discard self-locking nuts (Figure 2, Item 6).

WARNING

Two personnel are required to help guide the cargo body to and from frame. Failure to comply may result in death or injury to personnel. Seek medical attention in the event of an injury.

7. Lift cargo body (Figure 2, Item 3) from frame (Figure 2, Item 5) with lifting device and secure. Remove lifting device from cargo body (Figure 2, Item 3).

END OF TASK

INSTALLATION

1. Attach a suitable lifting device to cargo body (Figure 2, Item 3).

WARNING

Two personnel are required to help guide the cargo body to and from frame. Failure to comply may result in death or injury to personnel. Seek medical attention in the event of an injury.

2. Lift cargo body (Figure 2, Item 3) onto frame (Figure 2, Item 5) and align mounting holes.
3. At front chassis sill, loosely install three cap screws (Figure 2, Item 4) and new self-locking nuts (Figure 2, Item 6) on cargo body (Figure 2, Item 3) and frame (Figure 2, Item 5).
4. At each of two midchassis mounting brackets (Figure 2, Item 1), loosely install cap screw (Figure 2, Item 2) and new self-locking nut (Figure 2, Item 15) on mounting brackets (Figure 2, Item 1).
5. At rear chassis sill, loosely install cap screw (Figure 2, Item 11) and new self-locking nut (Figure 2, Item 10) on cargo body (Figure 2, Item 3) and frame (Figure 2, Item 5).
6. At each of two rear corner mounting brackets (Figure 2, Item 13), loosely install two cap screws (Figure 2, Item 12) and new self-locking nuts (Figure 2, Item 14) on mounting brackets (Figure 2, Item 13).

INSTALLATION - Continued

7. Insert eight square neck bolts (Figure 2, Item 7), clamps (Figure 2, Item 8), and new self-locking nuts (Figure 2, Item 9) into cargo body (Figure 2, Item 3).
8. Torque 18 self-locking nuts (Figure 2, Items 6, 9, 10, 14, and 15) between 26 – 31 lb-ft (35 – 42 N•m).
9. Remove lifting device from cargo body (Figure 2, Item 3).

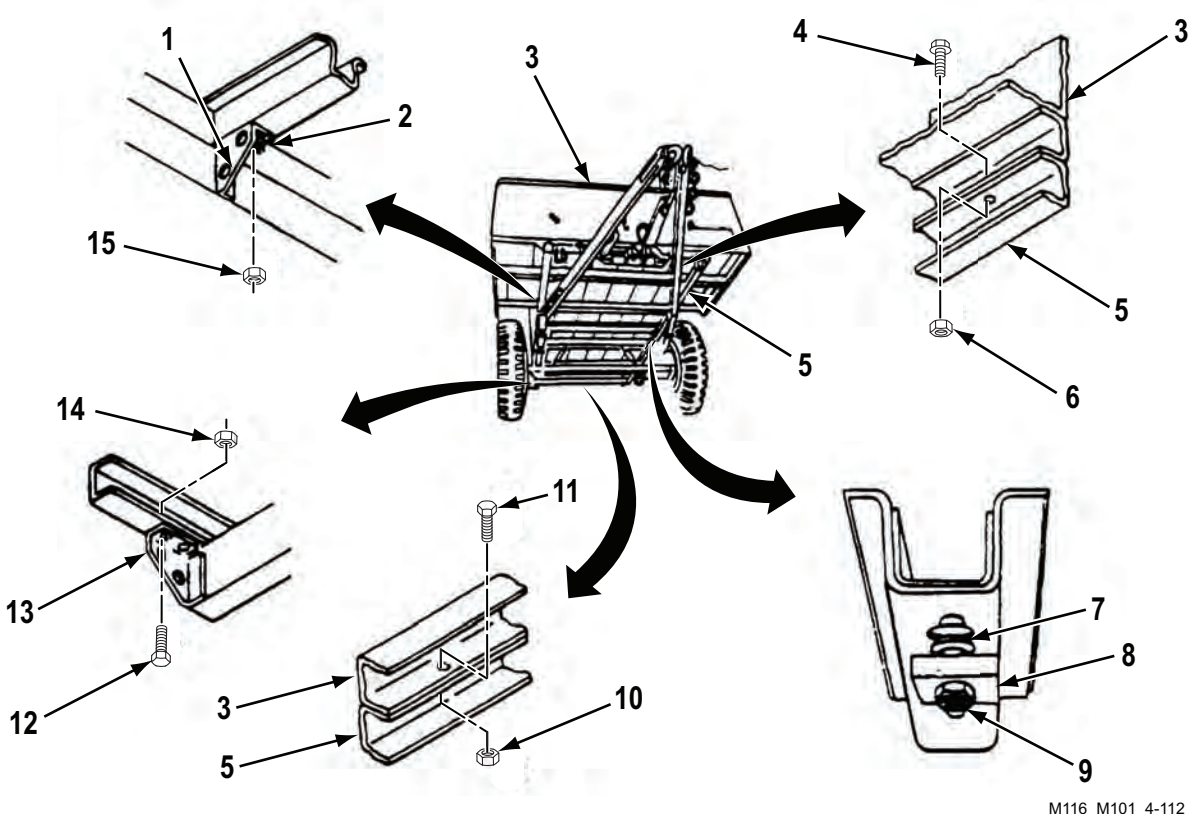

Figure 2. Cargo Body Installation.

END OF TASK

END OF WORK PACKAGE

FIELD MAINTENANCE
TAILGATE REPLACEMENT

INITIAL SETUP:

Tools and Special Tools
Tool Kit, General Mechanic's
(WP 0115, Table 1, Item 1)

Materials/Parts
Four cotter pins (M101A2 and M101A3)

Materials/Parts (cont.)
(WP 0101, Figure 20, Item 11)
Four cotter pins (M101A1)
(WP 0101, Figure 20, Item 41)

Personnel Required
Two

WARNING

Tailgate weighs over 100 lb (45 kg). Use suitable lifting device. Failure to comply may result in death or injury to personnel. Seek medical attention in the event of an injury.

REMOVAL

1. Remove two latch pins (Figure 1, Item 3) from cargo body (Figure 1, Item 1) and release top corners of tailgate (Figure 1, Item 2) from cargo body (Figure 1, Item 1).
2. Open and lower tailgate (Figure 1, Item 2) and support it with wood blocks.

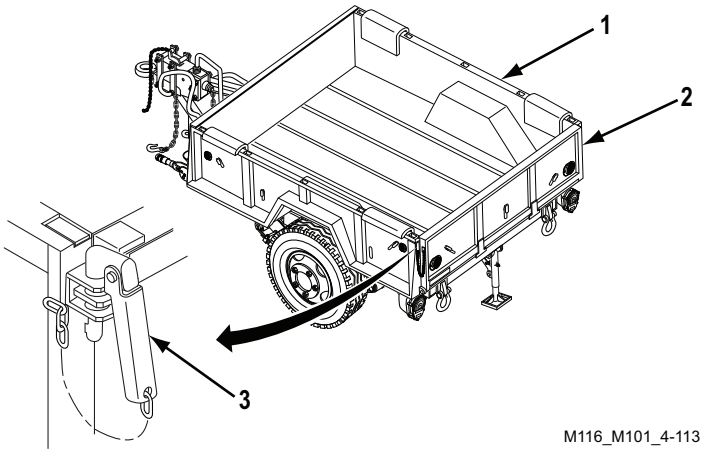

Figure 1. Tailgate Removal.

REMOVAL - Continued

WARNING

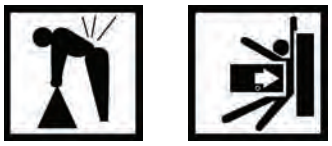

- Tailgate weighs over 100 lb (45 kg). Use suitable lifting device. Failure to comply may result in death or injury to personnel. Seek medical attention in the event of an injury.
- Hold tailgate in place before removing or installing straight headed pins. If tailgate is not properly supported it may fall. Failure to comply may result in death or injury to personnel. Seek medical attention in the event of an injury.

3. Remove four cotter pins (Figure 2, Item 4) and straight headed pins (Figure 2, Item 6) from four hinges (Figure 2, Item 3) and eyebolts (Figure 2, Item 5). Discard cotter pins (Figure 2, Item 4).
4. Remove tailgate (Figure 2, Item 2) from cargo body (Figure 2, Item 1).

END OF TASK

INSTALLATION

WARNING

- Tailgate weighs over 100 lb (45 kg). Use suitable lifting device. Failure to comply may result in death or injury to personnel. Seek medical attention in the event of an injury.
- Hold tailgate in place before removing or installing straight headed pins. If tailgate is not properly supported it may fall. Failure to comply may result in death or injury to personnel. Seek medical attention in the event of an injury.

1. Position tailgate (Figure 2, Item 2) at cargo body (Figure 2, Item 1) and support tailgate (Figure 2, Item 2) with wood blocks.
2. Align four hinges (Figure 2, Item 3) with eyebolts (Figure 2, Item 5) and install four straight headed pins (Figure 2, Item 6) through hinges (Figure 2, Item 3) with heads facing away from center of tailgate (Figure 2, Item 2).
3. Install four new cotter pins (Figure 2, Item 4) in four straight headed pins (Figure 2, Item 6).
4. Raise tailgate (Figure 2, Item 2) and secure to top corners of cargo body (Figure 2, Item 1) with two latch pins (Figure 2, Item 7).

INSTALLATION - Continued

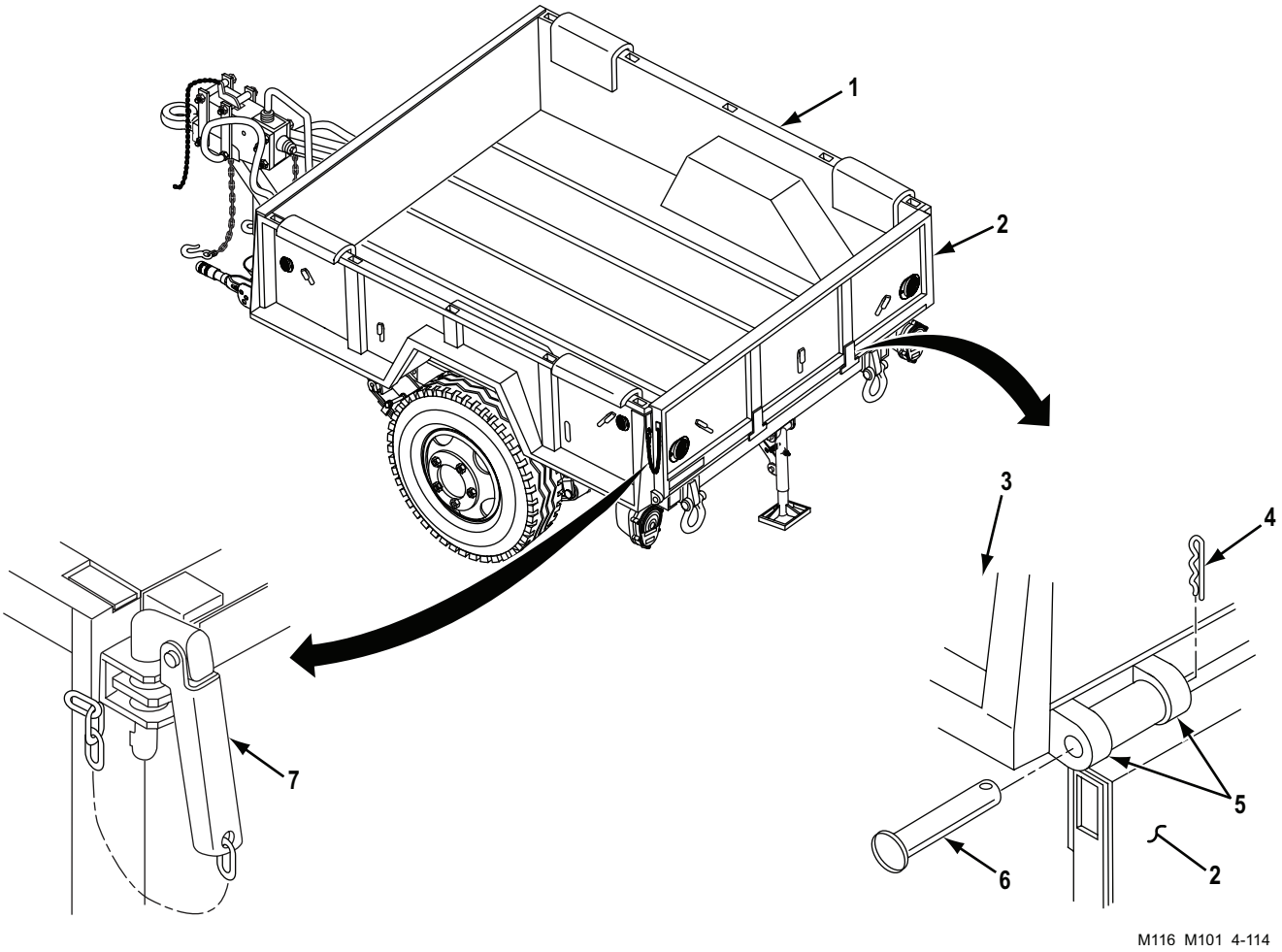

Figure 2. Tailgate Replacement.

END OF TASK

END OF WORK PACKAGE

FIELD MAINTENANCE
U-BOLT REPLACEMENT

INITIAL SETUP:

Tools and Special Tools
Tool Kit, General Mechanic's
(WP 0115, Table 1, Item 1)

Materials/Parts
Two lockwashers
(WP 0101, Figure 20, Item 24)

REMOVAL

Remove two nuts (Figure 1, Item 3), lockwashers (Figure 1, Item 4), and washers (Figure 1, Item 5), plate (Figure 1, Item 6), and U-bolt (Figure 1, Item 1) from cargo body (Figure 1, Item 2).
Discard lockwashers (Figure 1, Item 4).

END OF TASK

INSTALLATION

Install U-bolt (Figure 1, Item 1) on cargo body (Figure 1, Item 2) with plate (Figure 1, Item 6) and two washers (Figure 1, Item 5), new lockwashers (Figure 1, Item 4), and nuts (Figure 1, Item 3).

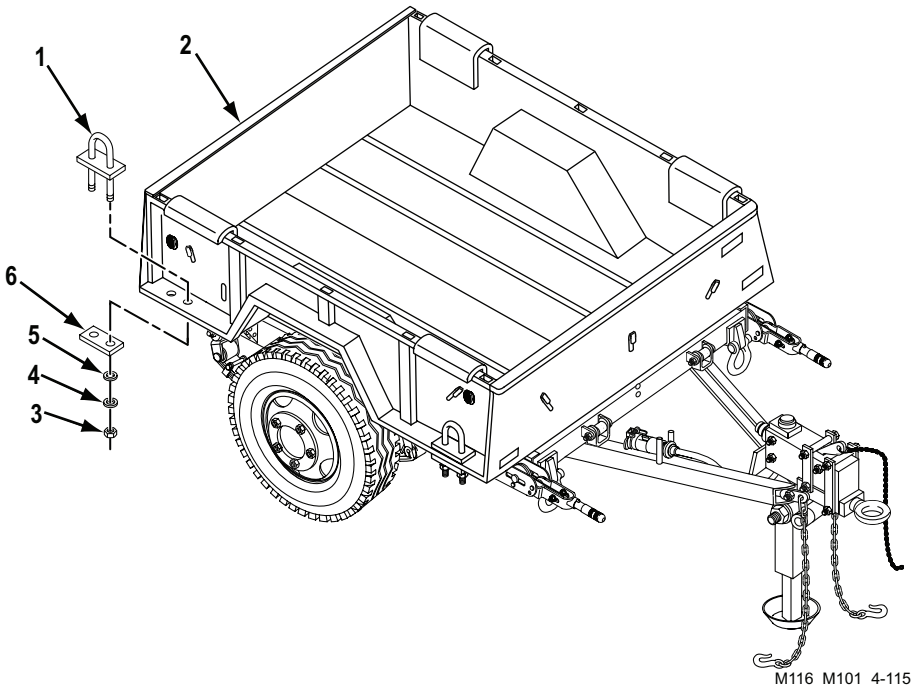

Figure 1. U-Bolt Replacement.

END OF TASK

END OF WORK PACKAGE

FIELD MAINTENANCE
CANVAS COVER ASSEMBLY ROPE REPLACEMENT

INITIAL SETUP:

Tools and Special Tools
Tool Kit, General Mechanic's

Tools and Special Tools (cont.)
(WP 0115, Table 1, Item 1)

REMOVAL

Cut rope (Figure 1, Item 3) from canvas cover assembly (Figure 1, Item 1). Discard rope (Figure 1, Item 3).

END OF TASK

INSTALLATION

1. Feed new rope (Figure 1, Item 3) through grommet (Figure 1, Item 2) and loop securely around grommet (Figure 1, Item 2). Install clip (Figure 1, Item 4) on rope (Figure 1, Item 3) and crimp.
2. Install end clip (Figure 1, Item 5) on end of rope (Figure 1, Item 3) and crimp.

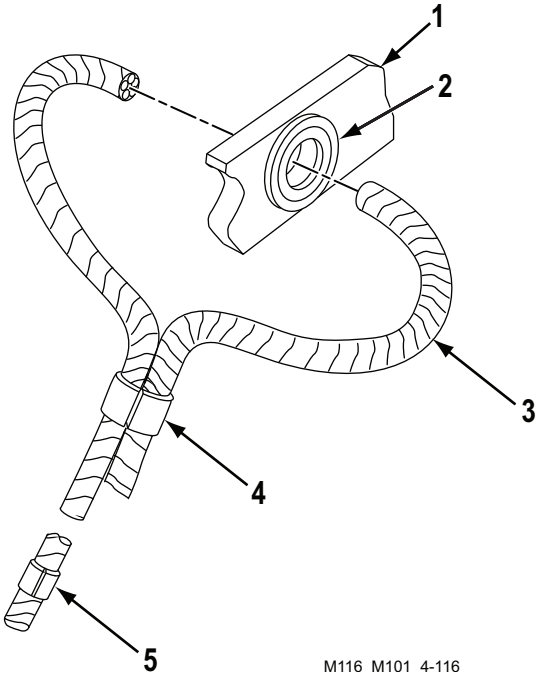

Figure 1. Rope Replacement.

END OF TASK

END OF WORK PACKAGE

FIELD MAINTENANCE
REFLECTOR REPLACEMENT

INITIAL SETUP:

Tools and Special Tools
Tool Kit, General Mechanic's
(WP 0115, Table 1, Item 1)

Materials/Parts
Two lockwashers
(WP 0103, Figure 22, Item 3)

REMOVAL

Remove two nuts (Figure 1, Item 5), lockwashers (Figure 1, Item 4), and screws (Figure 1, Item 3) and reflector (Figure 1, Item 1) from cargo body (Figure 1, Item 2). Discard lockwashers (Figure 1, Item 4).

END OF TASK

INSTALLATION

NOTE

Reflector should be installed on cargo body with heads of screws on inside of cargo body.

Install reflector (Figure 1, Item 1) on cargo body (Figure 1, Item 2) with two screws (Figure 1, Item 3), new lockwashers (Figure 1, Item 4), and nuts (Figure 1, Item 5).

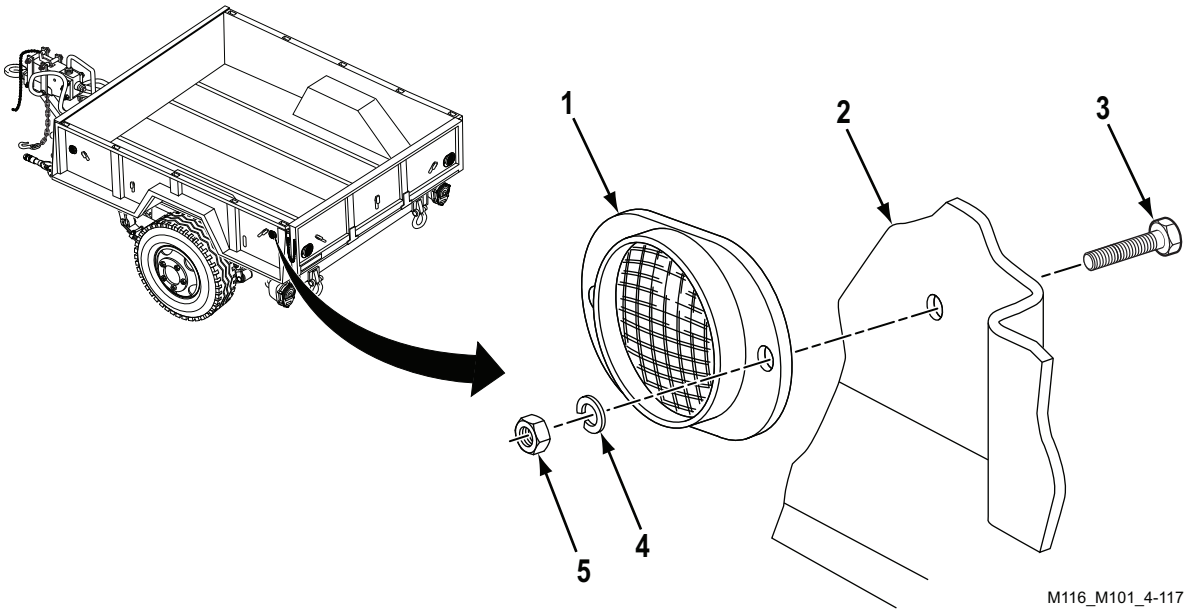

Figure 1. Reflector Replacement.

END OF TASK

END OF WORK PACKAGE

FIELD MAINTENANCE
DATA PLATE REPLACEMENT

INITIAL SETUP:

Tools and Special Tools
Tool Kit, General Mechanic's
(WP 0115, Table 1, Item 1)

Materials/Parts
Six screws
(WP 0104, Figure 23, Item 5)

REMOVAL

WARNING

Wear eye protection when driving heads off screws or rivets. Failure to comply may result in death or injury to personnel. Seek medical attention in the event of an injury.

NOTE

Newer-model trailers may use rivets instead of screws.

Drive heads off six rivets or remove six screws (Figure 1, Item 1) and data plate (Figure 1, Item 2) from cargo body or frame. Discard screws (Figure 1, Item 1) or rivets.

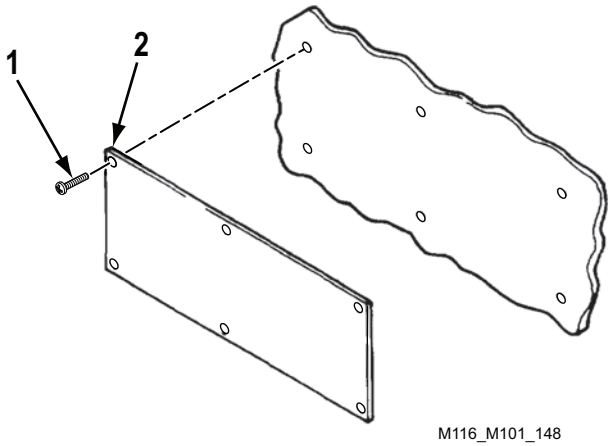

Figure 1. Data Plate Removal.

END OF TASK

INSTALLATION

1. If serial number is missing, add to data plate (Figure 2, Item 2).
2. Install data plate (Figure 2, Item 2) on cargo body or frame with six new screws (Figure 2, Item 1).

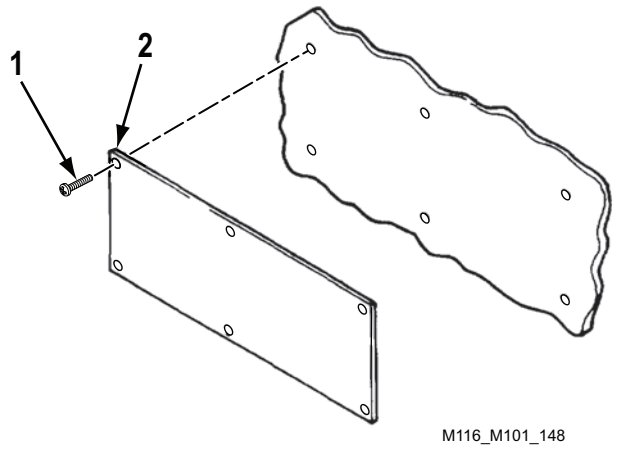

Figure 2. Data Plate Installation.

END OF TASK

END OF WORK PACKAGE

FIELD MAINTENANCE
REAR STABILIZER REPLACEMENT

INITIAL SETUP:

Tools and Special Tools
Tool Kit, General Mechanic's
(WP 0115, Table 1, Item 1)

Materials/Parts
Four lockwashers (WP 0105, Figure 24, Item 5)

Materials/Parts (cont.)
Self-locking nut (WP 0105, Figure 24, Item 7)
Cotter pin (WP 0105, Figure 24, Item 12)

References
WP 0077

REMOVAL

1. Release latch hook (Figure 1, Item 3) from up-latch pin (Figure 1, Item 2). Lower rear stabilizer (Figure 1, Item 1) to the ground.
2. Remove self-locking nut (Figure 1, Item 4), shoulder bolt (Figure 1, Item 10), and rear stabilizer (Figure 1, Item 1) from bracket (Figure 1, Item 8). Discard self-locking nut (Figure 1, Item 4).
3. Remove cotter pin (Figure 1, Item 6), straight pin (Figure 1, Item 9), and latch hook (Figure 1, Item 3) from rear stabilizer (Figure 1, Item 1). Discard cotter pin (Figure 1, Item 6).
4. Remove spring (Figure 1, Item 5) and latch hook (Figure 1, Item 3) from rear stabilizer (Figure 1, Item 1).
5. Remove lubrication fitting (Figure 1, Item 7) from rear stabilizer (Figure 1, Item 1).

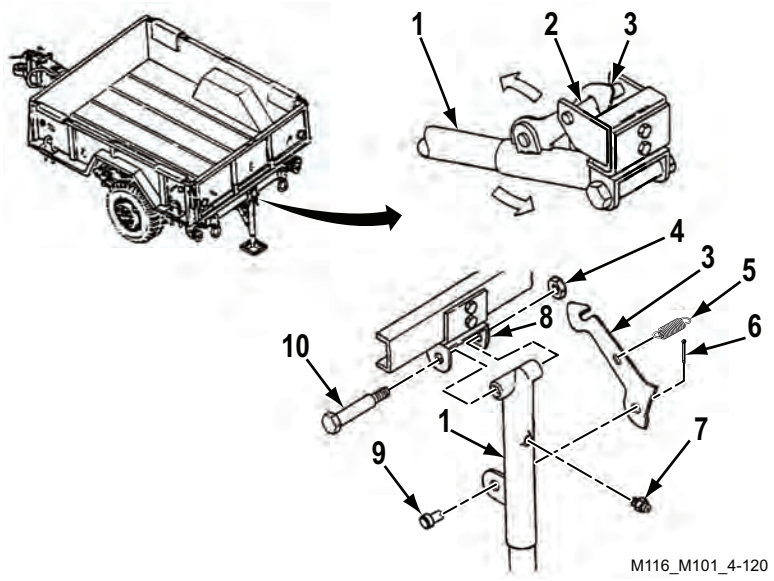

Figure 1. Latch Hook Removal.

REMOVAL - Continued

6. Remove two nuts (Figure 2, Item 19), cap screws (Figure 2, Item 17), lockwashers (Figure 2, Item 18), and bracket (Figure 2, Item 9) from frame (Figure 2, Item 3) and bracket (Figure 2, Item 4). Discard lockwashers (Figure 2, Item 18).
7. Remove two nuts (Figure 2, Item 1), cap screws (Figure 2, Item 6), lockwashers (Figure 2, Item 5), and brackets (Figure 2, Items 4 and 2) from frame (Figure 2, Item 3). Discard lockwashers (Figure 2, Item 5).

END OF TASK

INSTALLATION

1. Install brackets (Figure 2, Items 2 and 4) on frame (Figure 2, Item 3) with two cap screws (Figure 2, Item 6), new lockwashers (Figure 2, Item 5), and nuts (Figure 2, Item 1).
2. Install bracket (Figure 2, Item 9) on frame (Figure 2, Item 3) and bracket (Figure 2, Item 4) with two cap screws (Figure 2, Item 17), new lockwashers (Figure 2, Item 18), and nuts (Figure 2, Item 19).
3. Install lubrication fitting (Figure 2, Item 14) on rear stabilizer (Figure 2, Item 13).
4. Install spring (Figure 2, Item 11) and latch hook (Figure 2, Item 10) on rear stabilizer (Figure 2, Item 13).
5. Install latch hook (Figure 2, Item 10) on rear stabilizer (Figure 2, Item 13) with straight pin (Figure 2, Item 15) and new cotter pin (Figure 2, Item 12).
6. Install rear stabilizer (Figure 2, Item 13) on bracket (Figure 2, Item 9) with shoulder bolt (Figure 2, Item 7) and new self-locking nut (Figure 2, Item 8).
7. Swing rear stabilizer (Figure 2, Item 13) up until latch hook (Figure 2, Item 10) hooks onto up-latch pin (Figure 2, Item 16).

INSTALLATION - Continued

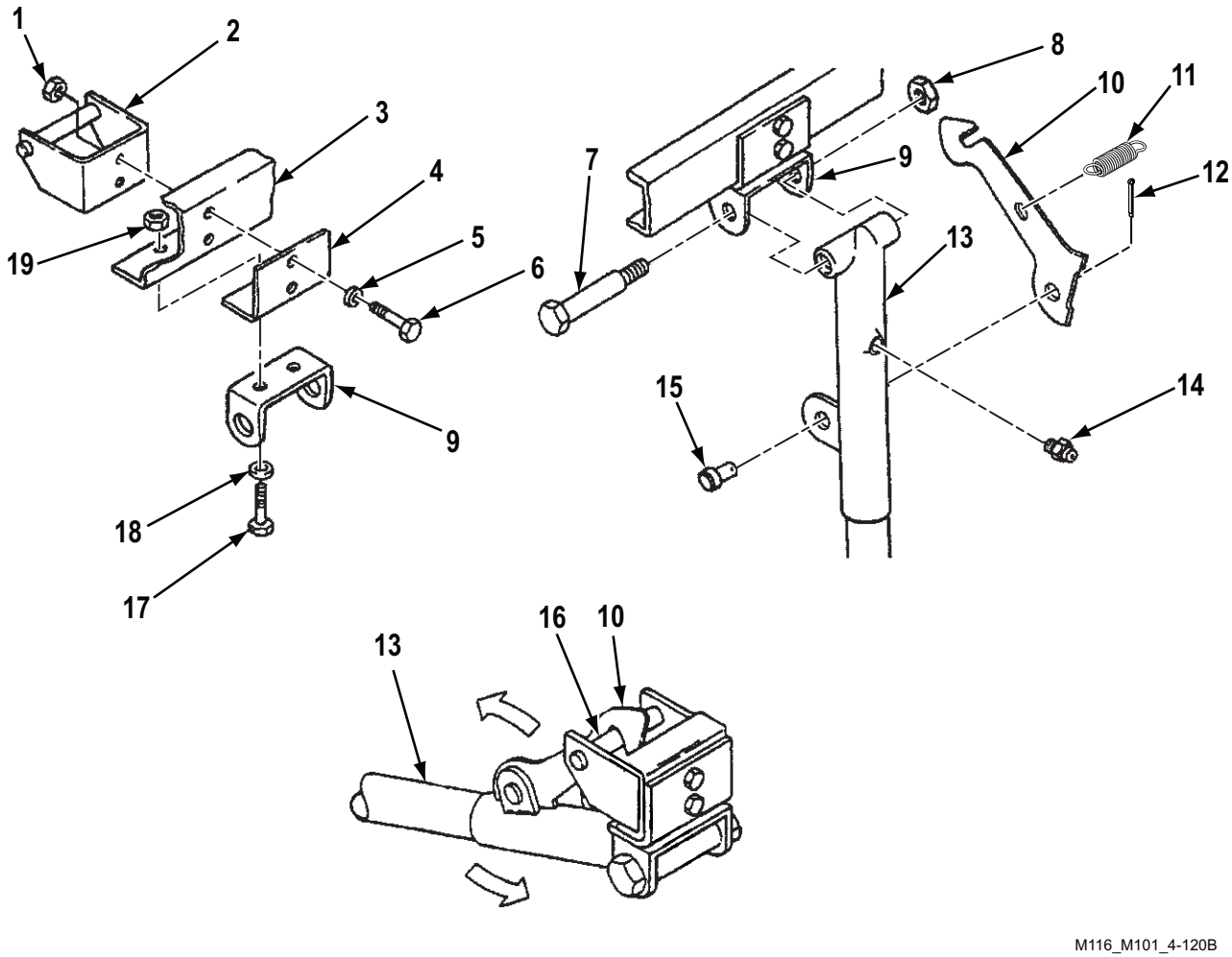

Figure 2. Rear Stabilizer Replacement.

END OF TASK

FOLLOW ON TASK

Lubricate rear stabilizer (WP 0077).

END OF TASK

END OF WORK PACKAGE

FIELD MAINTENANCE
PAINTING AND IDENTIFICATION MARKING

INITIAL SETUP:

References
ATTP 3–34.39
TB 43-0209
TM 43-0139

PAINTING

1. Instructions for the preparation of materiel for painting, methods of painting, and materials to be used are contained in TM 43-0139.
2. Instructions for camouflage painting are contained in ATTP 3–34.39.

END OF TASK

STENCILING

Refer to TB 43-0209 for instructions on the application of stencils.

END OF TASK

END OF WORK PACKAGE

FIELD MAINTENANCE
PREPARATION FOR STORAGE AND SHIPMENT

INITIAL SETUP:

References
AR 200-1
DA PAM 750-8
SB 740-98-1

References (cont.)
TB 43-0209
WP 0005
WP 0077

GENERAL

1. This section contains requirements and procedures for the administrative storage of equipment that is issued to and in use by Army activities worldwide.
2. The requirements specified herein are necessary to maintain equipment in administrative storage in such a way as to achieve maximum readiness condition.
3. Equipment that is placed in administrative storage should be capable of being readied to perform its mission within a 24-hour period, or as otherwise prescribed by the approving authority. Before equipment is placed in administrative storage, current PMCS procedures should be completed and deficiencies corrected.
4. Report equipment in administrative storage as prescribed for all reportable equipment, refer to AR 200-1, Environmental Protection and Enhancement.
5. Perform inspections, maintenance services, and lubrication as specified herein.
6. Records and reports to be maintained for equipment in administrative storage are those prescribed by DA PAM 750-8, for equipment in use.
7. A 10 percent variance is acceptable on time, running hours, or mileage used to determine the required maintenance actions.
8. Accomplishment of applicable PMCS, as mentioned throughout this section, will be on a semiannual basis.

END OF TASK

DEFINITION OF ADMINISTRATIVE STORAGE

The placement of equipment in administrative storage can be for short periods of time when a shortage of maintenance effort exists. Items should be ready for use within the time factors determined by the directing authority. During the storage period, appropriate maintenance records will be kept.

END OF TASK

PREPARATION OF EQUIPMENT FOR ADMINISTRATIVE STORAGE

Storage Site

1. Select the best available site for administrative storage. Separate stored equipment from equipment in use. Conspicuously mark the area Administrative Storage.
2. Covered space is preferred.
3. Open sites should be improved hardstand, if available. Unimproved sites should be firm, well drained, and free of excessive vegetation.

PREPARATION OF EQUIPMENT FOR ADMINISTRATIVE STORAGE - Continued

Storage Plan

1. Store equipment so as to provide maximum protection from the elements and access for inspection, maintenance, and exercising. Anticipate removal or deployment problems and take suitable precautions.
2. Take into consideration environmental conditions, such as extreme heat and cold; high humidity; blowing sand, dust, or loose debris; soft ground; mud; heavy snows; or any combination thereof. Take adequate precautions in regard to environmental conditions.
3. Establish a fire plan and provide for adequate fire-fighting equipment and personnel.

NOTE

Steps 4 and 5 apply to the M101A2 and M101A3 trailers.

4. Remove, fold, and stow the canvas cover assembly (WP 0005).
5. Remove and stow the rack and tailgate assembly (WP 0005).

Maintenance Services and Inspection

1. Prior to storage, perform the next scheduled Field PMCS.
2. Inspect and approve the equipment prior to storage. Do not place in storage equipment that is not mission capable.

Auxiliary Equipment and Basic Issue Items

1. Process auxiliary equipment and basic issue items (BII) simultaneously with the major item to which they are assigned.
2. If possible, store auxiliary equipment and BII with the major item.
3. If stored apart from the major item, mark auxiliary equipment and BII with tags indicating the major item and its registration or serial number and location, and store in protective-type enclosures. In addition, place a tag or list indicating the location of the removed items in a conspicuous place on the major item.

Correction of Shortcomings and Deficiencies

Correct all shortcomings and deficiencies prior to storage, or obtain a deferment from the approving authority.

Lubrication

Lubricate equipment in accordance with instructions in (WP 0077).

General Cleaning, Painting, and Preservation

CAUTION

Do not direct water or steam, under pressure, against unsealed electrical systems or any exterior opening. Failure to comply may result in damage to, or destruction of, equipment or mission.

1. Clean dirt, grease, and other contaminants from the equipment, but do not use vapor degreasing.

PREPARATION OF EQUIPMENT FOR ADMINISTRATIVE STORAGE - Continued

General Cleaning, Painting, and Preservation - Continued

2. Remove rust and damaged paint by scraping, wire brushing, sanding, or buffing. Sand to a smooth finish and spot-paint as necessary, refer to TB 43-0209.
3. After cleaning and drying, immediately coat unpainted metal surfaces with oil or grease, as appropriate (WP 0077). For information on the proper preservation of M101A2 and M101A3 trailers, refer to SB 740-98-1, Storage Serviceability Standard: Tracked Vehicles, Wheeled Vehicles, and Component Parts (IL).

END OF TASK

END OF WORK PACKAGE

FIELD MAINTENANCE
SPECIAL INSTRUCTIONS FOR ADMINISTRATIVE STORAGE

INITIAL SETUP:

References
- DA Form 2404
- DA Form 2407
- DA Form 2408
- DA Form 5988-E
- DA Form 5990-E

References (cont.)
- DD Form 1397
- SF Form 364
- TM 38-400
- WP 0032
- WP 0077

CARE OF EQUIPMENT IN ADMINISTRATIVE STORAGE

Maintenance Services

After equipment has been placed in administrative storage, inspect, service, and exercise as specified in this section.

INSPECTION

Inspection will usually be visual and must consist of at least a walk-around examination of all equipment to detect any deficiencies. Inspect equipment in open storage weekly, and inspect equipment in covered storage monthly. Inspect all equipment immediately after any severe storm or environmental change. The following are examples of things to look for during a visual inspection:

1. Low or flat tires.
2. Condition of preservatives, seals, and wraps.
3. Corrosion or other deterioration.
4. Missing or damaged parts.
5. Water in compartments.
6. Any other readily recognizable shortcomings or deficiencies.

Repair During Administrative Storage

Keep equipment in an optimum state of readiness. Accomplish the required services and repairs as quickly as possible. Whenever possible, perform all maintenance on-site.

Exercising

Exercise equipment in accordance with Table 1 and the following instructions:

1. Depreserve equipment by removing only that material restricting exercise. Remove blocks and perform all before- operation checks. Couple trailer to prime mover and drive for at least 25 miles (40 km). Make several right and left 90-degree turns. Make several hard braking stops without skidding. During exercise when it is convenient and safe, operate all other functional components and perform all during- and after-operation checks.
2. Scheduled services will include inspection per the Inspection section and will be conducted in accordance with Table 1. Lubricate in accordance with the instructions in (WP 0077).

CARE OF EQUIPMENT IN ADMINISTRATIVE STORAGE - Continued

Exercising - Continued

3. Immediately take action to correct shortcomings and deficiencies noted. Record inspection and exercise results on DA Form 2404 or DA Form 5988-E. Record and report all maintenance actions on DA Form 2407. After exercising, restore the preservation to the original condition. Replenish lubricants used during exercising and note the amount on DA Form 2408 or DA Form 5990-E, Equipment Log Assembly (Records).

Table 1. Exercise Schedule.

Weeks	**2**	**4**	**6**	**8**	**10**	**12**	**14**	**16**	**18**	**20**	**22**	**24**
PMCS						X						X
Scheduled Services		X		X		X		X		X		
Major Exercises												X

Rotation

Rotate items in accordance with any rotational plan that will keep the equipment in operational condition and reduce the maintenance effort.

END OF TASK

PROCEDURES FOR COMMON COMPONENTS AND MISCELLANEOUS ITEMS

Tires

Visually inspect tires during each walk-around inspection. This inspection includes checking tires with a tire gauge. Inflate, repair, or replace as necessary those tires found to be low, damaged, or excessively worn. Mark inflated and repaired tires with a crayon for checking at the next inspection.

Seals

Seals may develop leaks during storage or shortly thereafter. If leaking persists, refer to the applicable maintenance section in this manual for corrective maintenance procedures.

END OF TASK

REMOVAL OF EQUIPMENT FROM ADMINISTRATIVE STORAGE

Activation

Restore equipment to normal operating condition in accordance with the instructions contained in (WP 0032).

Servicing

Resume the maintenance service schedule in effect at the commencement of storage, or service the equipment before the scheduled dates in order to produce a staggered workload.

END OF TASK

PREPARATION OF EQUIPMENT FOR SHIPMENT

1. Refer to TM 38-400 for additional instructions on processing, storage, and shipment of materiel.
2. Trailers shipped on flatcars require wheel blocking in accordance with the Association of American Railroads' rules governing the loading of commodities on open top cars.
3. Trailers that have been removed from storage for shipment do not have to be reprocessed if they will reach their destination within the administrative storage period. Reprocess only if inspection reveals any corrosion or if intransit weather conditions make it necessary.
4. When a trailer is received and has already been processed for domestic shipment, as indicated on DD Form 1397, the trailer does not have to be reprocessed for storage unless corrosion and deterioration are found during the inspection upon receipt. List, on SF Form 364, Report of Discrepancy (ROD), all discrepancies found because of poor preservation, packaging, packing, marking, handling, loading, storage, or excessive preservation. Repairs that cannot be handled by the receiving unit must have tags attached listing needed repairs. A report of these conditions will be submitted by the Unit commander for action by an ordnance Maintenance Unit.

END OF TASK

END OF WORK PACKAGE

FIELD MAINTENANCE
LUBRICATION INSTRUCTIONS

INITIAL SETUP:

Materials/Parts
Degreasing solvent
(WP 0114, Table 1, Item 9)

References
FM 9-207

References (cont.)
DA PAM 750-8
TM 9-214
WP 0054
WP 0063

GENERAL

NOTE

These instructions are MANDATORY.

1. The M101 and M116 Series trailers must receive lubrication with approved lubricants at recommended intervals in order to be mission-ready at all times.
2. The KEY lists lubricants to be used in all temperature ranges and shows the intervals.
3. The Lubrication Chart shows lubrication points, items to be lubricated, required lubricants, and recommended intervals for lubrication. Any special lubricating instructions for specific components are contained in NOTES.
4. Recommended intervals are based on normal conditions of operation; under extreme conditions, lubricants should always be changed more frequently. When in doubt, notify your Supervisor.

LUBRICATION INSTRUCTIONS

1. Keep all lubricants in a closed container and store in a clean, dry place away from extreme heat. Keep container covers clean and do not allow dust, dirt, or other foreign material to mix with lubricants. Keep all lubrication equipment clean and ready for use.
2. Maintain a record of lubrication performed and report any problems noted during lubrication. Refer to DA PAM 750-8 for maintenance forms and procedures for recording and reporting any findings.

WARNING

Wipe excess lubricant from the area of brake shoe linings to prevent grease from soaking the linings. If brake shoe linings become soaked, have Field Maintenance replace them. Failure to comply may cause brakes to malfunction resulting in death or injury to personnel. Seek medical attention in the event of an injury.

3. Keep all external parts not requiring lubrication free of lubricants. After lubrication, wipe off excess oil or grease to prevent accumulation of foreign matter.
4. After parts are cleaned, rinse and dry them thoroughly. Apply a light grade of oil to all polished metal surfaces to prevent rusting.

LUBRICATION INSTRUCTIONS - Continued

5. When authorized to install new parts, remove any preservative materials, such as rust preventive compound or protective grease, prior to installation. Apply lubricant prescribed in lubrication instructions if required.
6. Clean and lubricate bearings as specified in TM 9-214.
7. Refer to FM 9-207 for lubrication instructions in cold weather.
8. After operation in mud or in sandy or dusty conditions, clean and inspect all points of lubrication for fouled lubricants. Change lubricants as required.
9. After any fording operation, lubricate vehicle in accordance with lubrication instructions.

WARNING


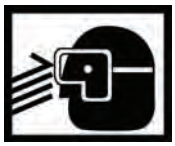

- Solvent cleaning compound MIL-PRF-680 may be irritating to the eyes and skin. Use protective gloves and goggles. First aid for skin contact: remove contaminated clothing. Wash skin thoroughly with soap and water. First aid for eye contact: flush with water until irritation subsides. If symptoms persist, seek medical attention. Failure to comply may result in death or injury to personnel. Seek medical attention in the event of an injury.
- Use solvent cleaning compound MIL-PRF-680 in a well ventilated area. Use respirator as needed. Accidental ingestion can cause irritation of digestive tract and respiratory tract. May cause lung and central nervous system damage. Can be fatal if swallowed. Inhalation of high/massive concentrations can cause coma or be fatal. First aid for ingestion: do not induce vomiting. Seek immediate medical attention. First aid for inhalation: move to fresh air. If not breathing, provide artificial respiration. If symptoms persist, seek medical attention. Failure to comply may result in death or injury to personnel. Seek medical attention in the event of an injury.
- MIL-PRF-680 solvent is combustible; DO NOT use or store near heat, sparks, flame, or other ignition sources. Use mechanical ventilation whenever product is used in a confined space, heated above ambient temperatures, or agitated. Keep container sealed when not in use. Failure to comply may result in death or injury to personnel. Seek medical attention in the event of an injury.
- Improper cleaning methods and use of unauthorized cleaning liquids or solvents can injure personnel and damage equipment. Failure to comply may result in death or injury to personnel. Seek medical attention in the event of an injury.
- Rags saturated with solvent cleaning compound must be disposed of IAW authorized facility procedures. Failure to comply may result in death or injury to personnel. Seek medical attention in the event of an injury.
- Solvent cleaning compound MIL-PRF-680 is toxic and flammable. Always wear protective goggles and gloves, and use only in a well-ventilated area. Avoid contact with skin, eyes, and clothes, and DO NOT breathe vapors. DO NOT use near open flame or excessive heat. Failure to comply may result in death or injury to personnel. Seek medical attention in the event of an injury.

10. Clean all fittings and the area around lubrication points with cleaning solvent or the equivalent before lubricating equipment. After lubrication, wipe off excess oil grease to prevent accumulation of foreign matter.

LUBRICATION CHART LEGEND

1. The Lubrication Chart covers lubrication points for the M101A1, M101A2, and M101A3 two-wheel, 3/4-ton cargo trailers; the M116A1 and M116A2 two-wheel, 3/4-ton chassis trailers; and the M116A3 two-wheel, 1-ton chassis trailer. The lubrication points shown are for all models unless otherwise noted.
2. Intervals (on-condition or hard time) and related man-hour times are based on normal operation. The man-hour time specified is the time you need to do all the services prescribed for a particular interval. Decrease the intervals if your lubricants are contaminated or if you are operating equipment under adverse conditions, including longer than usual operating hours. The intervals may be extended during periods of low activity. If extended, adequate preservation precautions must be taken.
3. The lowest level of maintenance authorized to lubricate a point is indicated in parentheses by use of the following: (C) Operator or (O) Field maintenance.

LUBRICATION CHART LEGEND - Continued

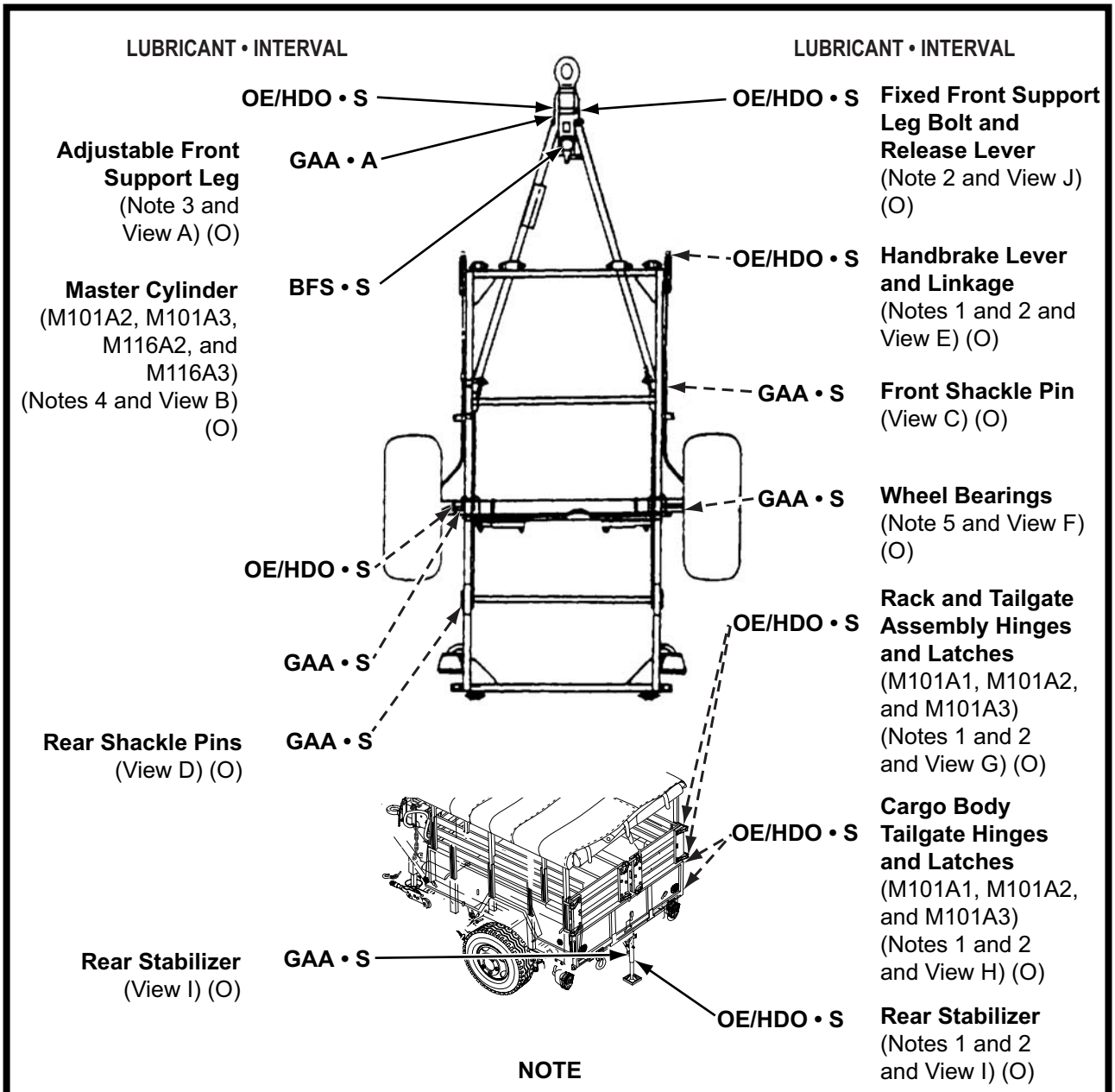

NOTE

Dotted leader lines indicate that lubrication is required on both sides of the equipment.

INTERVAL	MAN-HOURS*
S	1.0
A	2.7

* The man-hour time specified is the time you need to do all services prescribed for the particular interval.

M116 M101 R052

Figure 1. Lubrication Intervals.

LUBRICATION CHART LEGEND - Continued

-KEY-					
LUBRICANTS	EXPECTED TEMPERATURE			FOR ARCTIC OPERATIONS, REFER TO FM 9-207	INTERVALS
	ABOVE +32°F (ABOVE -0°C)	+40°F to -10°F (+4°C to -23°C)	40°F to -65°F (-18°C to -54°C)		
OE/HDO (MIL-PRF-2104) Lubricating Oil, Internal Combustion Engine, Tactical Service	OE/HDO-30	OE/HDO-10	—		S - Semiannual A - Annual
OEA (MIL-PRF-46167) Lubricating Oil, Internal Combustion Engine, Arctic	—	—	OEA		
BFS (MIL-PRF-46176) Brake Fluid, Silicone, Automotive	All Temperatures				
GAA (MIL-PRF-10924E&F) Grease, Automotive and Artillery	All Temperatures				

M116 M101 R054

Figure 2. Lubricants and Temperatures.

NOTES

WARNING


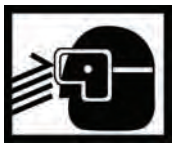

- Solvent cleaning compound MIL-PRF-680 may be irritating to the eyes and skin. Use protective gloves and goggles. First aid for skin contact: remove contaminated clothing. Wash skin thoroughly with soap and water. First aid for eye contact: flush with water until irritation subsides. If symptoms persist, seek medical attention. Failure to comply may result in death or injury to personnel. Seek medical attention in the event of an injury.
- Use solvent cleaning compound MIL-PRF-680 in a well ventilated area. Use respirator as needed. Accidental ingestion can cause irritation of digestive tract and respiratory tract. May cause lung and central nervous system damage. Can be fatal if swallowed. Inhalation of high/massive concentrations can cause coma or be fatal. First aid for ingestion: do not induce vomiting. Seek immediate medical attention. First aid for inhalation: move to fresh air. If not breathing, provide artificial respiration. If symptoms persist, seek medical attention. Failure to comply may result in death or injury to personnel. Seek medical attention in the event of an injury.
- MIL-PRF-680 solvent is combustible; DO NOT use or store near heat, sparks, flame, or other ignition sources. Use mechanical ventilation whenever product is used in a confined space, heated above ambient temperatures, or agitated. Keep container sealed when not in use. Failure to comply may result in death or injury to personnel. Seek medical attention in the event of an injury.
- Improper cleaning methods and use of unauthorized cleaning liquids or solvents can injure personnel and damage equipment. Failure to comply may result in death or injury to personnel. Seek medical attention in the event of an injury.
- Rags saturated with solvent cleaning compound must be disposed of IAW authorized facility procedures. Failure to comply may result in death or injury to personnel. Seek medical attention in the event of an injury.
- Solvent cleaning compound MIL-PRF-680 is toxic and flammable. Always wear protective goggles and gloves, and use only in a well-ventilated area. Avoid contact with skin, eyes, and clothes, and DO NOT breathe vapors. DO NOT use near open flame or excessive heat. Failure to comply may result in death or injury to personnel. Seek medical attention in the event of an injury.

1. For prolonged operation of equipment in extreme cold (temperatures below -10°F (23°C)), remove lubricants prescribed in the KEY for temperatures above -10°F (-23°C). Clean parts with cleaning solvent. Lubricate with lubricants specified in the KEY for temperatures of 0°F to -65°F (18°C to -54°). If OEA lubricant is required to meet the temperature changes prescribed in the KEY, OEA lubricant is to be used in place of OE/HDO-10 lubricant for all temperature ranges where OE/HDO-10 lubricant is specified in the key.

NOTES - Continued

2. Oil Can Points: Semiannually or as required, lubricate the following with OE/HDO: handbrake levers and linkage, adjustable front support leg pivot points and hand crank, rear stabilizer pivot points and latches, cargo body tailgate hinges and latches, and rack and tailgate assembly hinges and latches.
3. Adjustable Front Support Leg: Annually remove, clean, inspect, pack with GAA, and install (WP 0063).
4. Master Cylinder: Semiannually check fluid level. Add fluid to within 1/2 in (13 mm) from top.
5. Wheel Bearings: Annually remove, clean, inspect, pack with GAA, and install (WP 0054). Refer to TM 9-214.
6. Springs: Do not lubricate.

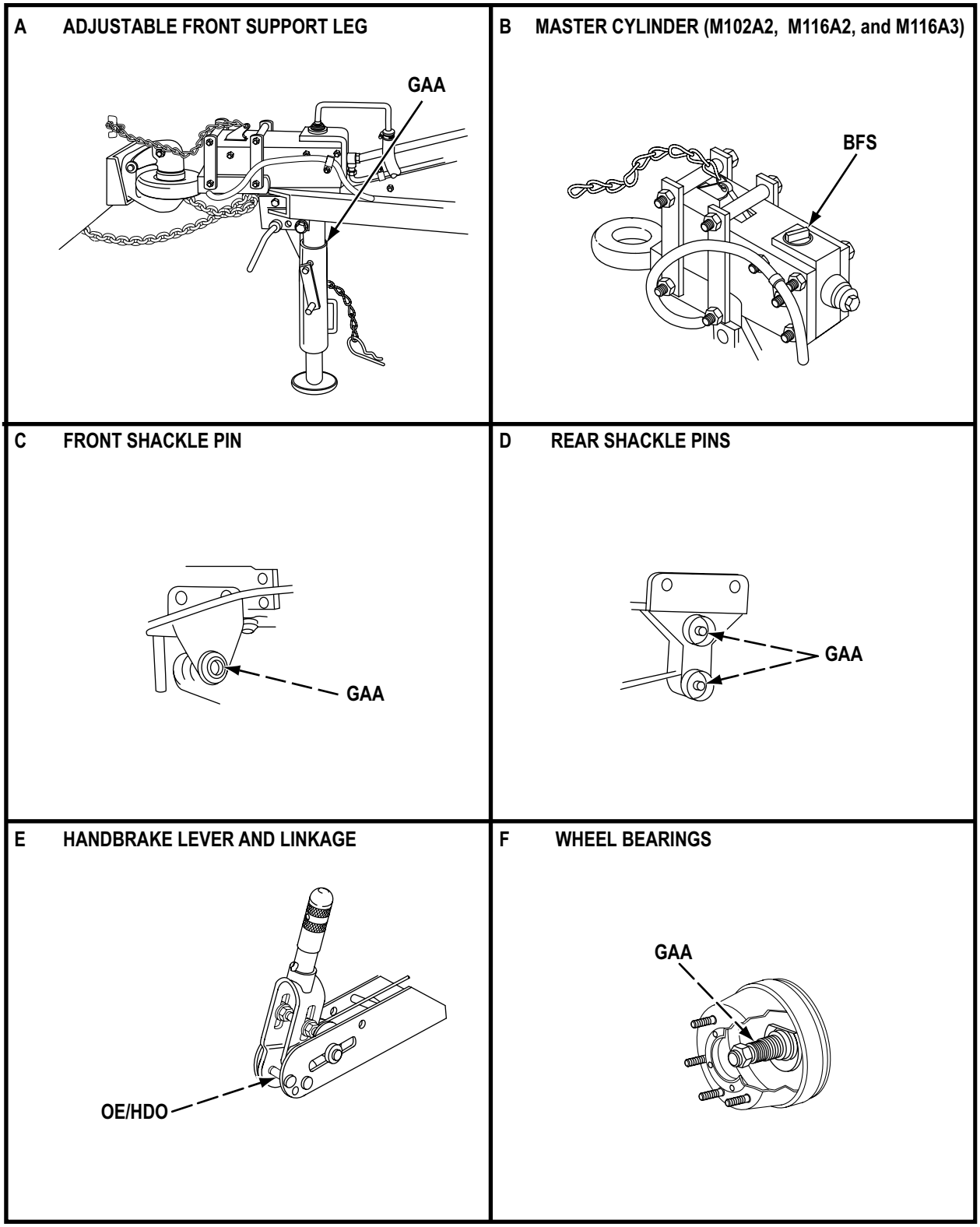

M116 M101 R053

Figure 3. Lubrication Points.

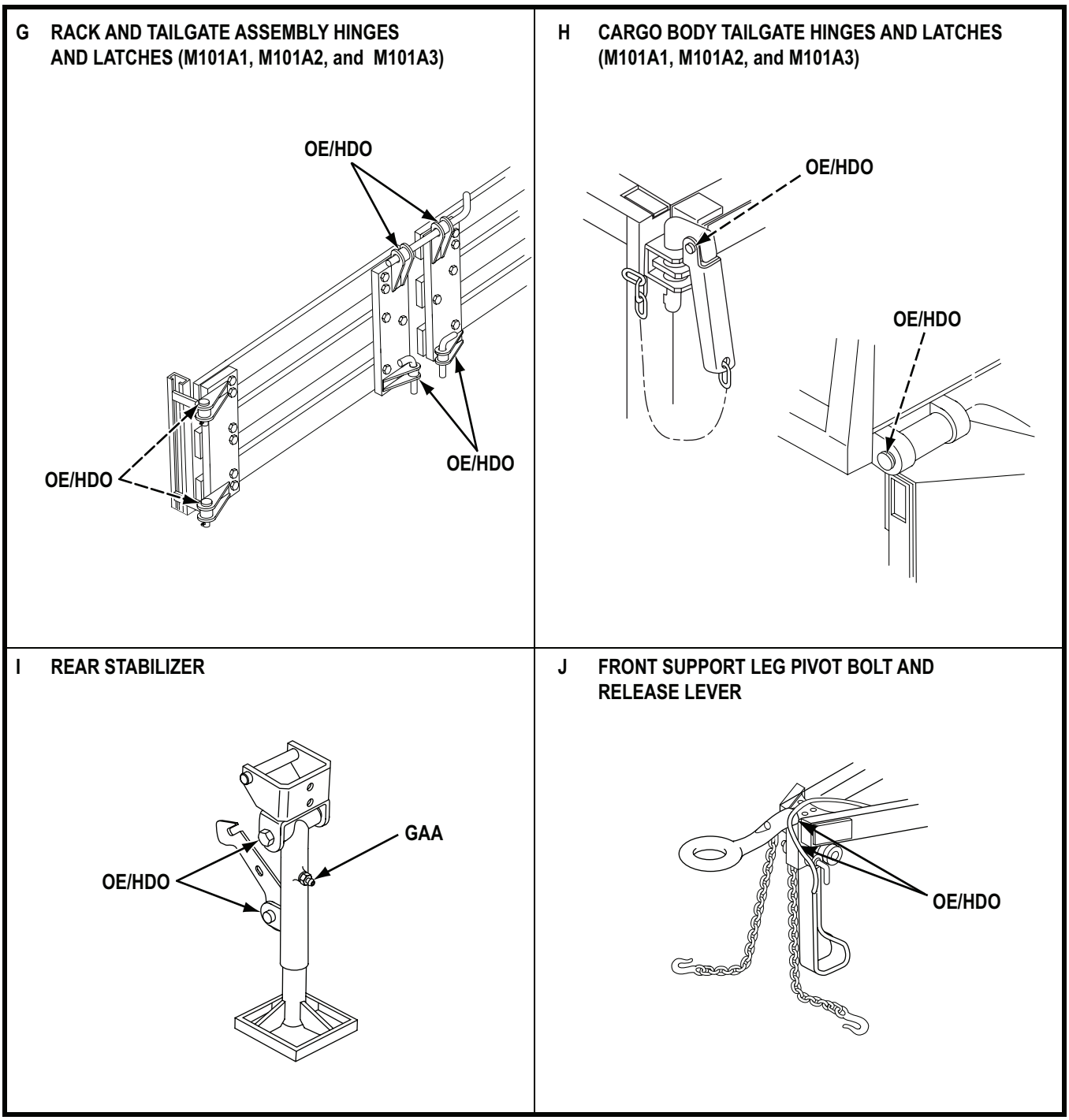

M116 M101 1-4

Figure 4. Lubrication Points - Continued.

END OF WORK PACKAGE

FIELD MAINTENANCE
ILLUSTRATED LIST OF MANUFACTURED ITEMS

INITIAL SETUP:

Not Applicable

Scope

This work package includes complete instructions for making items authorized to be manufactured or fabricated at Field Maintenance level.

How to Use the Index of Manufactured Items

A part number index in alphanumeric order is provided for cross-referencing the part number of the item to be manufactured to the page which covers fabrication criteria.

Explanation of the Illustrations of Manufactured Items

All instructions needed by maintenance personnel to manufacture the item are included on the illustrations. When manufacturing items, make sure the appropriate tools are used to cut, shape, and thread materials. Make sure hoses are clean and free of dust and moisture before installing after fabrication. All dimensions given in the illustrations are in standard units.

MANUFACTURED ITEMS PART NUMBER INDEX

Table 1. Index.

Part Number	Page	Figure
RRC271-8	M0044-8	9
11686100	M0044-2	1
11686102	M0044-3	3
11686103-1	M0044-5	5
11686103-2	M0044-5	5
12354224	M0044-3	2
12354225	M0044-4	4
12362795	M0044-7	7
12362796	M0044-6	6
7339259	M0044-8	8

1. Fabricate from bulk tube, part number M3520-B80B01G, NSN 4710-00-350-9896.
2. Cut to proper length and bend as shown to create part number 11686100-56.5.
3. Install nut, part number 110357, on each end of tube assembly (Figure 1).

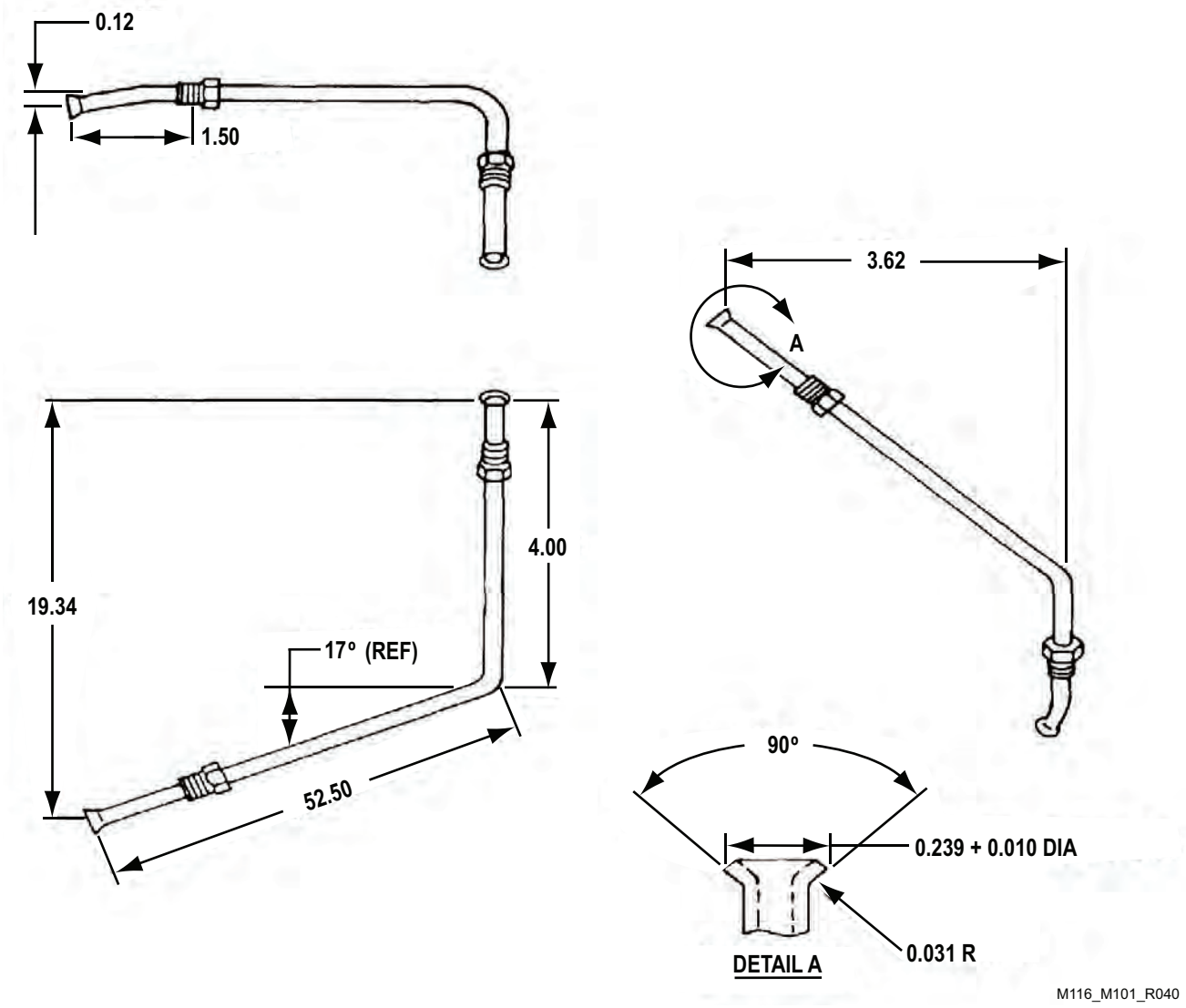

Figure 1. Front Hydraulic Brake Tube Assembly (M101A1, M101A2, and M116A2).

1. Fabricate from bulk tube, part number M3520-B80B01G, NSN 4710-00-350-9896.
2. Cut to proper length and bend as shown to create part number 12354224-1.
3. Install nut, part number 110357, on each end of tube assembly (Figure 2).

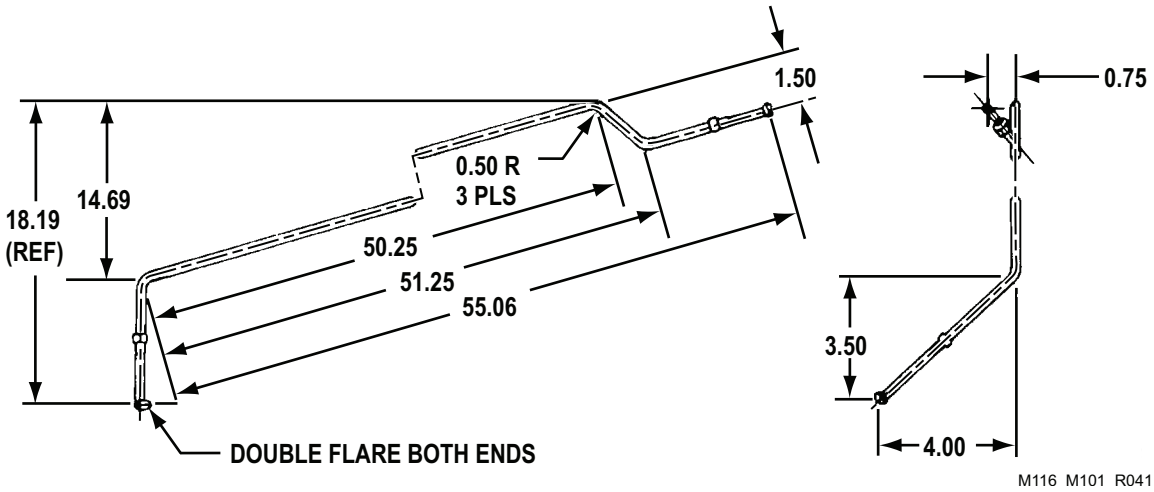

Figure 2. Front Hydraulic Brake Tube Assembly (M101A3 and M116A3).

1. Fabricate from bulk tube, part number M3520-B80B01G, NSN 4710-00-350-9896.
2. Cut to proper length and bend as shown to create part number 11686102-1X.
3. Install nut, part number 110357, on each end of tube assembly (Figure 3).

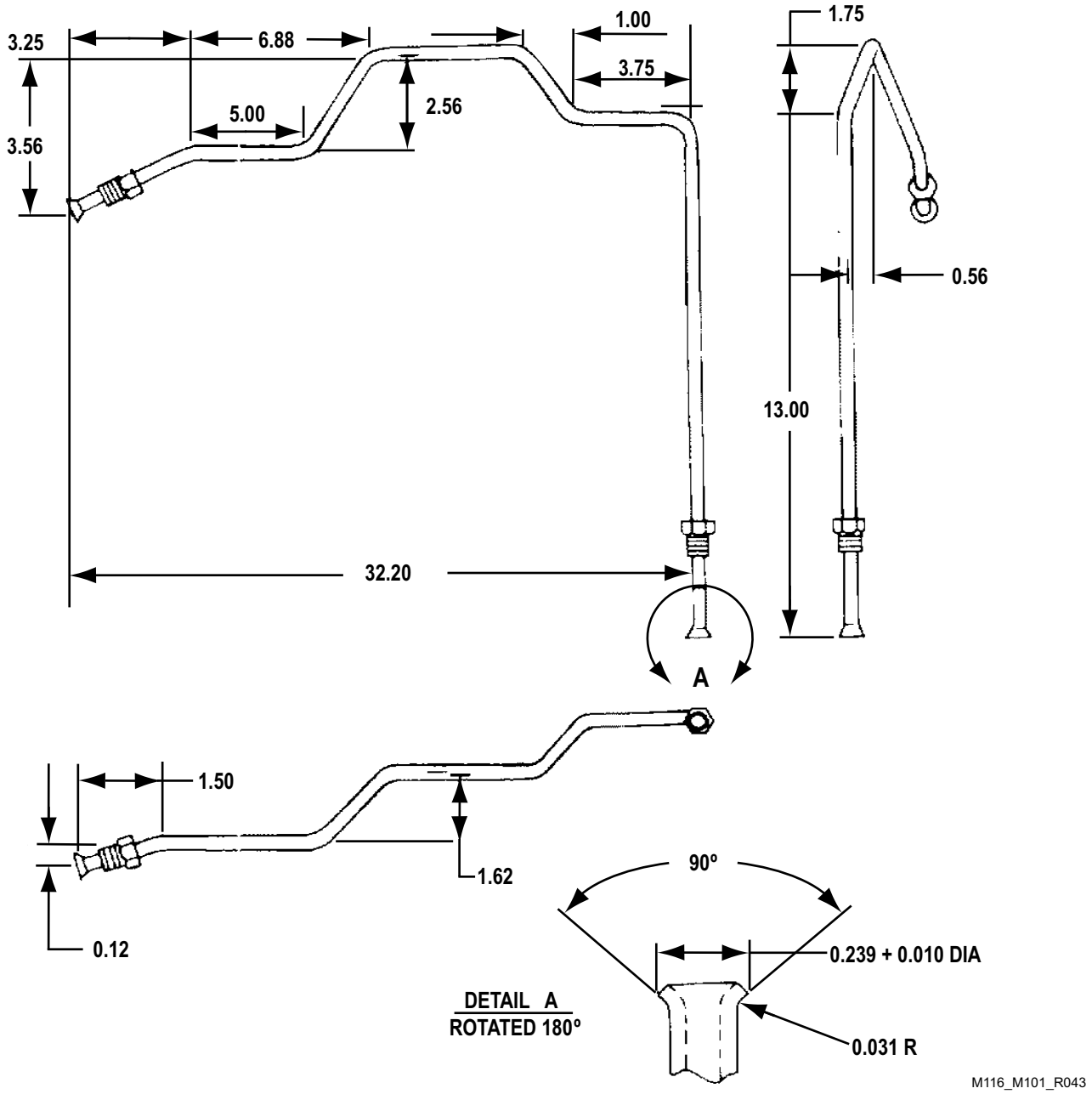

Figure 3. Rear Hydraulic Brake Tube Assembly (M101A2, and M116A2).

1. Fabricate from bulk tube, part number M3520-B80B01G, NSN 4710-00-350-9896.
2. Cut to proper length and bend as shown to create part number 12354225-1.
3. Install nut, part number 110357, on each end of tube assembly (Figure 4).

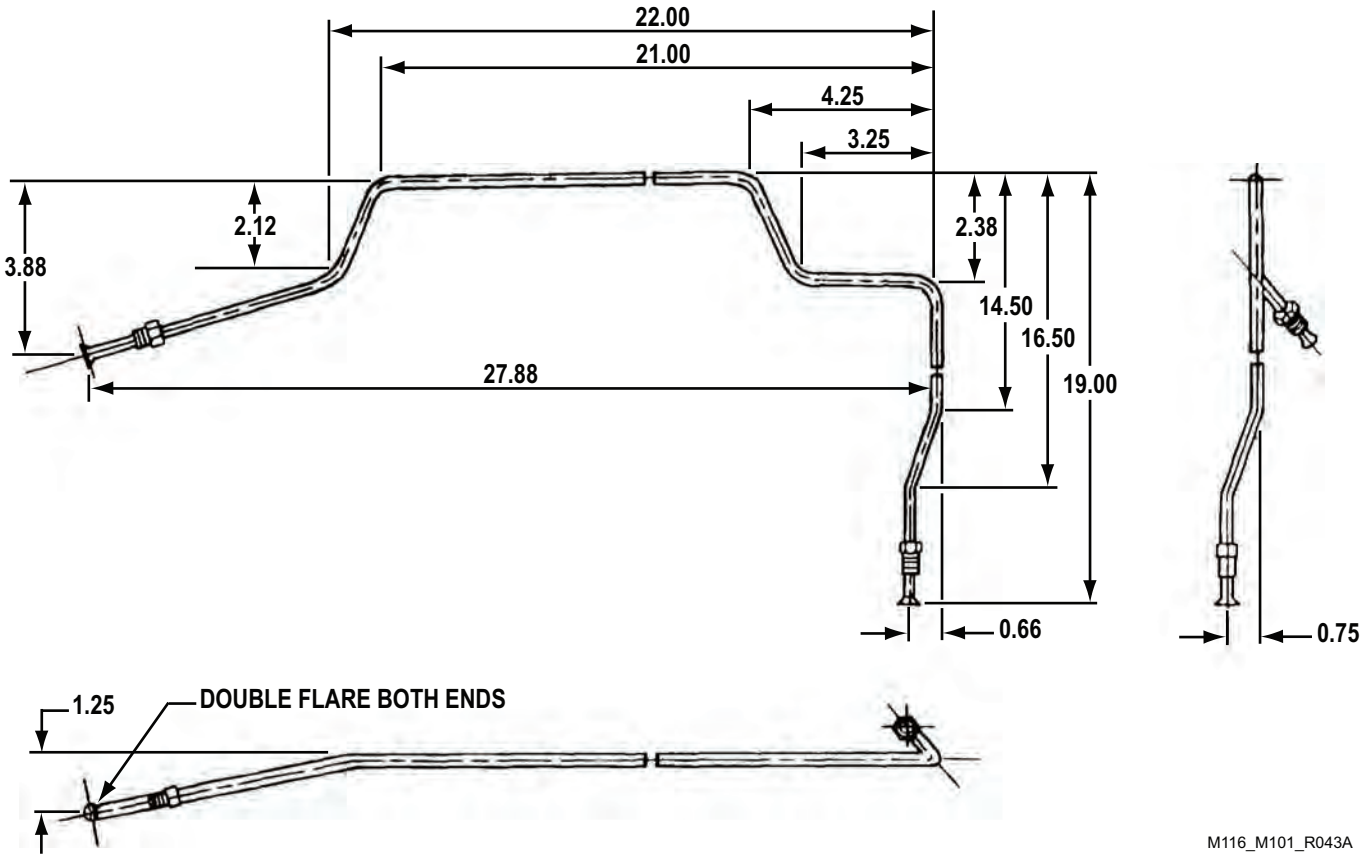

Figure 4. Rear Hydraulic Brake Tube Assembly (M101A1, M101A2, M101A3, and M116A3).

1. Fabricate from bulk tube, part number M3520-B80B01G, NSN 4710-00-350-9896.
2. Cut to proper length and bend (Figure 5).
3. Install nut, part number 110357, on each end of tube assembly (Figure 5).

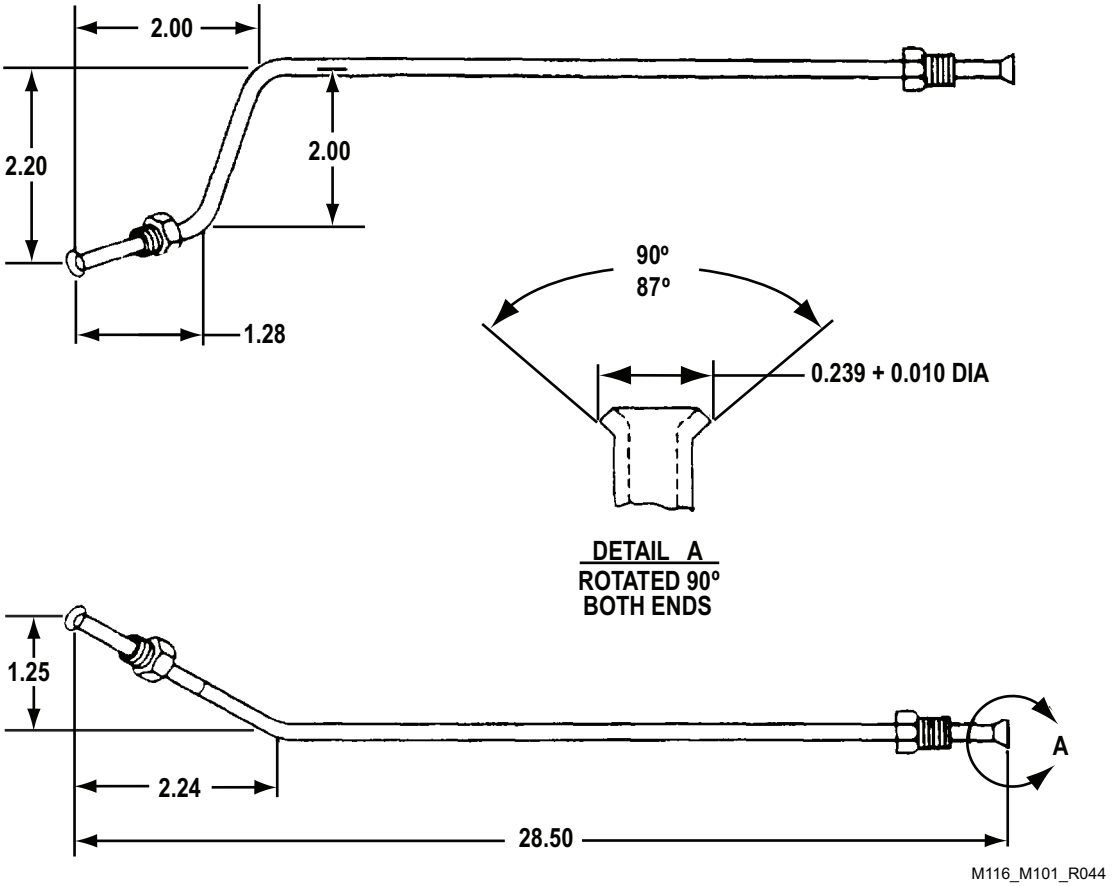

Figure 5. Left and Right Hydraulic Brake Tube Assembly (M101A1, M101A2, and M116A2).

Table 2. Hydraulic Brake Tube Assembly Reference.

PART NUMBER	POSITION
11686103-1	Left Side (As Shown)
11686103-2	Right Side (Opposite of Shown)

1. Fabricate from bulk tube, part number M3520-B80B01G, NSN 4710-00-350-9896.
2. Cut to proper length and bend as shown to create part number 12362796-1.
3. Install nut, part number 110357, on each end of tube assembly (Figure 6).

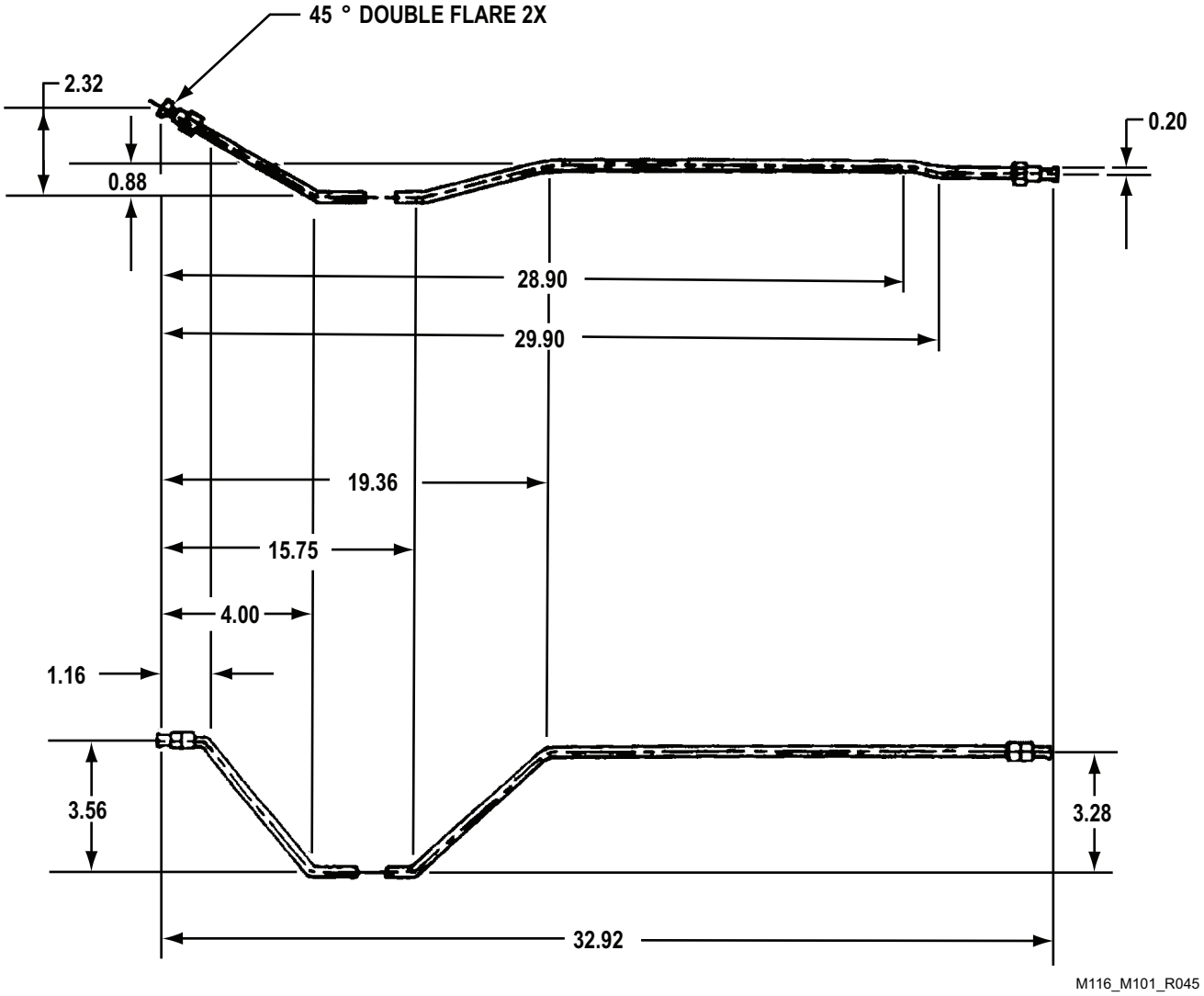

Figure 6. Left Hydraulic Brake Tube Assembly (M101A1, M101A2, M101A3, and M116A3).

1. Fabricate from bulk tube, part number M3520-B80B01G, NSN 4710-00-350-9896.
2. Cut to proper length and bend as shown to create part number 12362795-1.
3. Install nut, part number 110357, on each end of tube assembly (Figure 7).

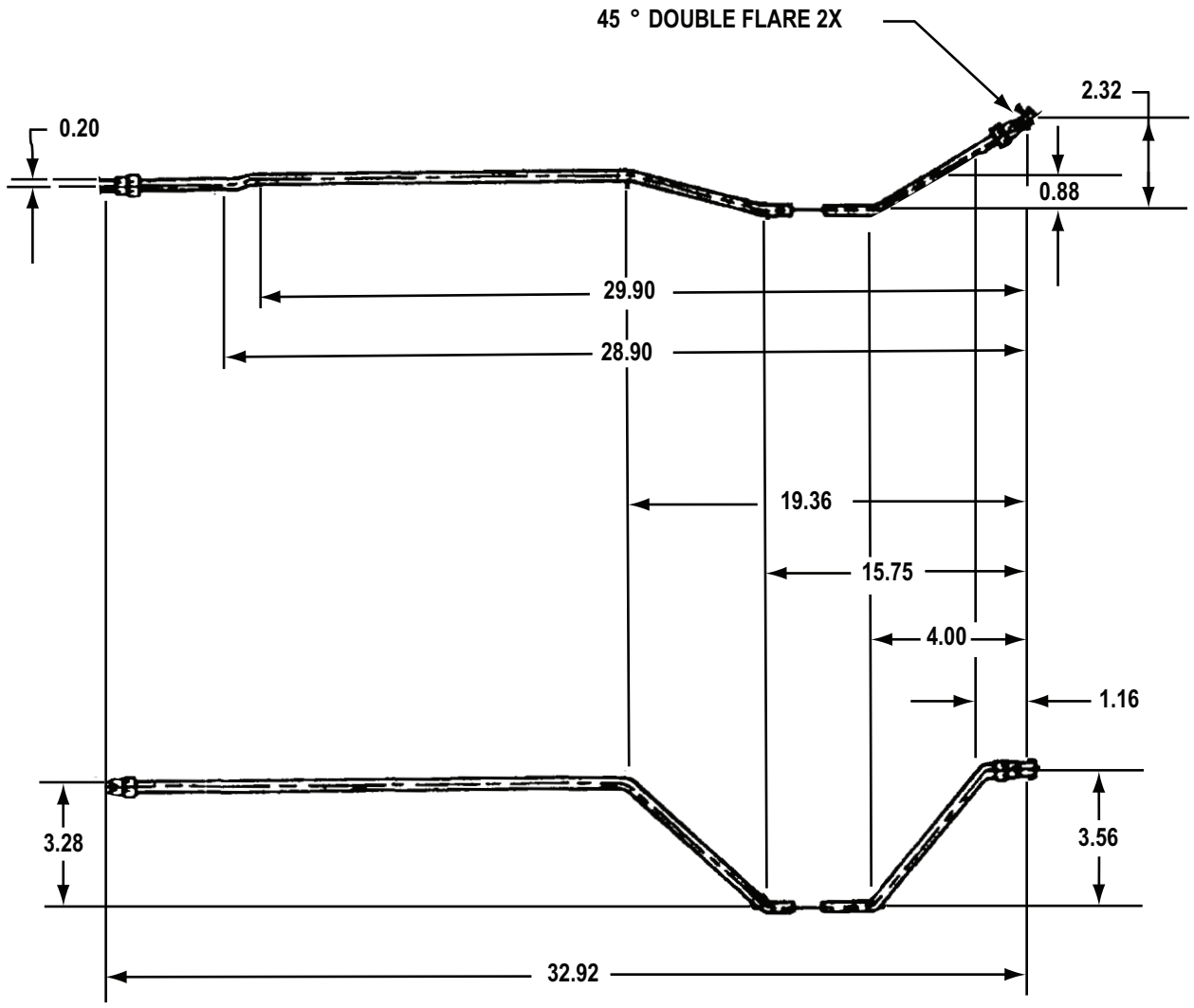

Figure 7. Right Hydraulic Brake Tube Assembly (M101A1, M101A2, M101A3, and M116A3).

1. Fabricate from bulk tube, part number WWP441 Class A, NSN 4710-00-162-1018.
2. Cut to length (Figure 8). Remove burrs.

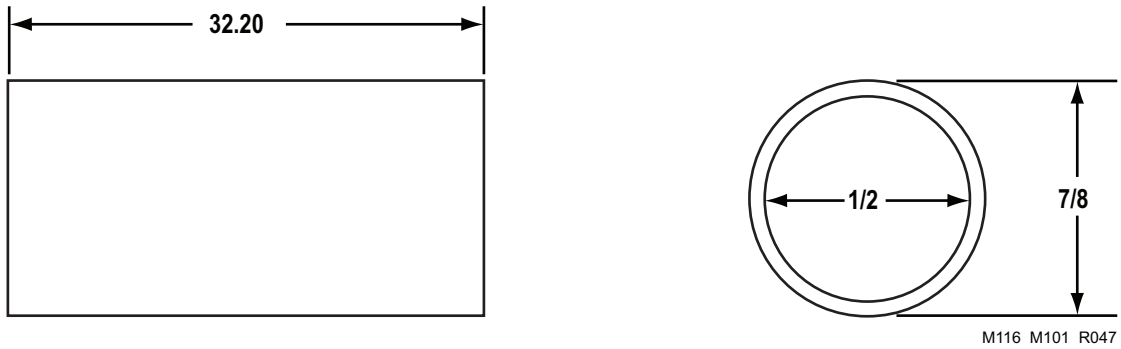

Figure 8. Drawbar Clamp Spacer (M101A2 and M116A2).

1. Fabricate from weldless chain, part number RRC271.
2. Cut to approximately 8 inches (20.32 cm) in length (12 links) (Figure 9), to create part number RRC271-8.

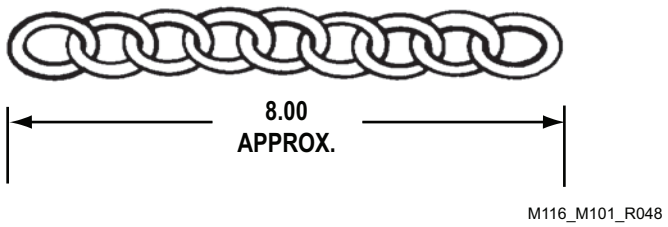

Figure 9. Adjustable Front Support Leg Chain.

END OF WORK PACKAGE

FIELD MAINTENANCE
TORQUE LIMITS

CAUTION

If replacement cap screws are of higher grade than originally supplied, use torque specifications for the original. This will prevent equipment damage due to over torquing. Failure to comply may result in damage to, or destruction of, equipment or mission.

SCOPE

This work package lists standard torque values and provides general information for applying torque. Special torque values and tightening sequences are indicated in the maintenance procedures for applicable components.

GENERAL

1. Always use torque values listed in Figures 3 and 4 when a maintenance procedure does not give a specific torque value.
    a. Figure 3 provides torque limits for SAE standard fasteners.
    b. Figure 4 provides torque limits for metric fasteners.
2. Unless otherwise indicated, standard torque tolerance shall be ±10 percent.
3. Torque values listed are based on clean, dry threads. Reduce torque by 10 percent when engine oil is used as a lubricant. Reduce torque by 20 percent if new plated cap screws are used.

TIGHTENING METAL FASTENERS

When torquing a fastener, select a wrench whose range fits the required torque value. A torque wrench is most accurate from 25 to 75 percent of its stated range. A wrench with a stated range of 0 to 100 lb-ft (0 to 136 N•m) will be most accurate from 25 to 75 lb-ft (34 to 102 N•m). The accuracy of readings will decrease as you approach 0 lb-ft or 100 lb-ft (136 N•m). Ranges in Table 1 are based on this principle.

Table 1. Metal Fasteners.

STATED RANGE		MOST EFFECTIVE RANGE	
0 to 200 lb-in	(0 to 23 N•m)	50 to 150 lb-in	(6 to 17 N•m)
0 to 600 lb-ft	(0 to 813 N•m)	50 to 450 lb-ft	(68 to 610 N•m)
0 to 170 lb-ft	(0 to 230 N•m)	44 to 131 lb-ft	(60 to 178 N•m)
15 to 75 lb-ft	(20 to 102 N•m)	30 to 60 lb-ft	(41 to 81 N•m)

SCOPE - Continued

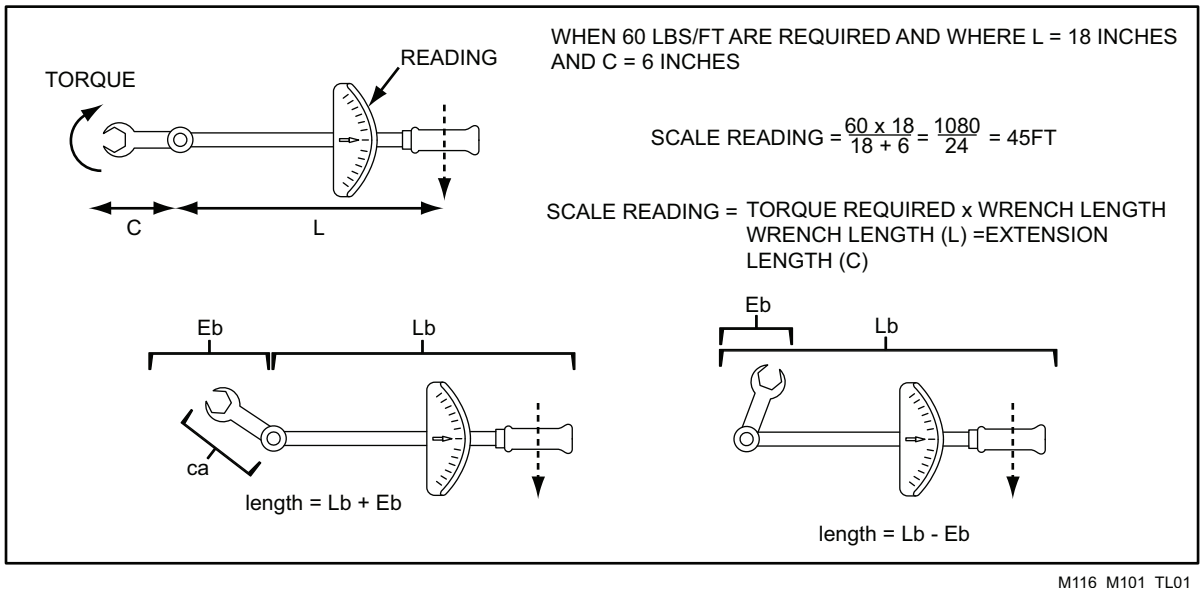

Figure 1. Torque Wrench Formula.

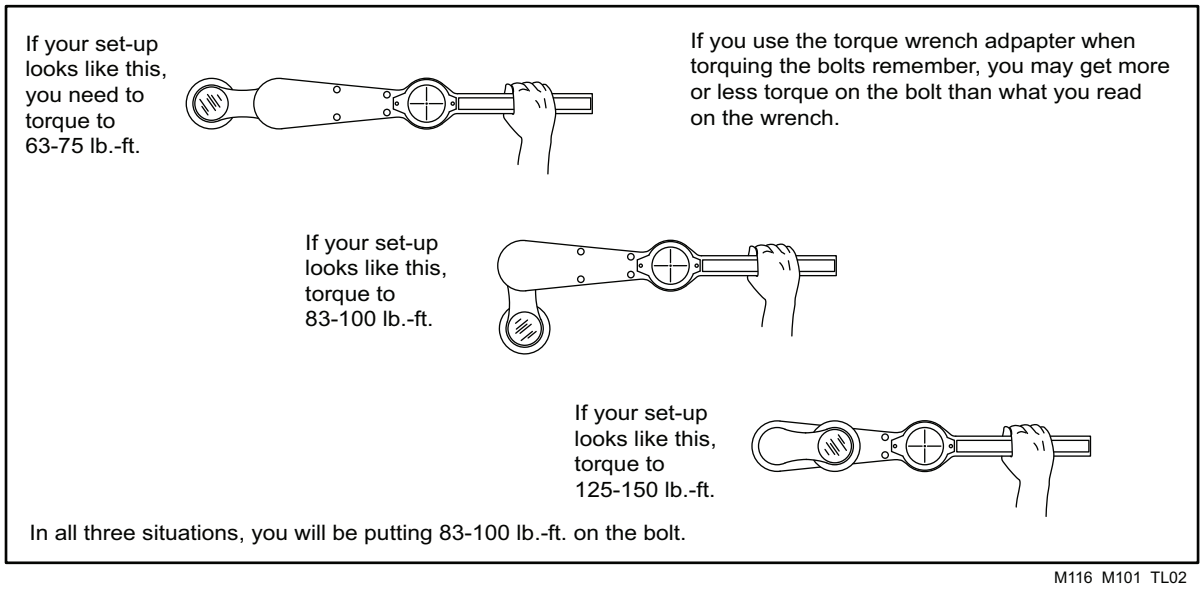

Figure 2. Torque Wrench Adapter Setups.

INSTALLATION AND TORQUING

1. **Matching Nuts.** Matching nuts require a minimum height equal to the basic diameter of the bolt. The same is true of tapped holes. In tapped softer materials, the depth of the tapped hole should be 1-1/2 times the basic diameter of the bolt.

2. **Threaded Protrusion.** In all installations, bolts, studs, and screws must extend through the nut at least a length equivalent to two complete threads. This applies to both self-locking and plain nuts.

3. **Torquing Self-Locking Nuts.** To obtain the correct recommended torque value on self-locking nuts, the nut must be tightened until it is one turn from the beginning of seating. At this point, if the torque is less than 1/3 of the recommended torque, it should be disregarded and the nut tightened to the recommended torque value. If the torque is 1/3 or more of the recommended torque, it should be added to the recommended torque. Example: The recommended torque is 50 – 70 lb-in (6 – 8 N•m). The torque at one turn from seating is 30 lb-in (3 N•m). The correct torque wrench reading would be 80 – 100 lb-in (9 – 11 N•m).

4. **Retorquing Fasteners.** Procedures intended for installing metal fasteners can cause incorrect readings when used to check or retorque already installed fasteners during maintenance. Before checking or retorquing an already installed threaded fastener, first mark the fastener and its companion components so the marks are in line. Second, back it off a 1/4 turn to loosen it. Torque it to the specification with an even steady pull on the torque wrench. The marks should be in line; if not, the marks will indicate the fastener was under- or overtorqued.

5. **Standard Torque Charts.** Standard torque charts have been established for dry and wet torque conditions. Surface variations such as thread roughness, scale paint, lubrication (oil, grease, etc.), hardening, and plating may alter these values considerably. Figures 3 and 4 are standard torque charts. To find the grade of the screw that is to be installed, match the markings on the head to the correct picture of CAP SCREW HEAD MARKINGS in Figures 3 and 4. Manufacturer's marks may vary.

INSTALLATION AND TORQUING - Continued

QUALITY OF MATERIAL		INDETERMINATE		MINIMUM COMMERCIAL		MEDIUM COMMERCIAL		BEST COMMERCIAL	
Sae Grade Number		1 or 2		5		6 or 7		8	
Cap screw Head Markings Manufacturer's Marks May Vary These are all SAE Grade 5 (3 line)		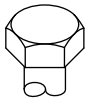		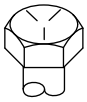				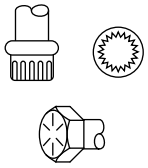	
CAP SCREW BODY SIZE IN – THREAD		**TORQUE LB-FT (N•m)**		**TORQUE LB-FT (N•m)**		**TORQUE LB-FT (N•m)**		**TORQUE LB-FT (N•m)**	
1/4	20	5	(7)	8	(11)	10	(14)	12	(16)
	28	6	(8)	10	(14)			14	(19)
5/16	18	11	(15)	17	(23)	19	(26)	24	(33)
	24	13	(18)	19	(26)			27	(37)
3/8	16	18	(24)	31	(42)	34	(46)	44	(60)
	24	20	(27)	35	(47)			49	(66)
7/16	14	28	(38)	49	(66)	55	(75)	70	(95)
	20	30	(41)	55	(75)			78	(106)
1/2	13	39	(53)	75	(102)	85	(115)	105	(142)
	20	41	(56)	85	(115)			120	(163)
9/16	12	51	(69)	110	(149)	120	(163)	155	(210)
	18	55	(75)	120	(163)			170	(231)
5/8	11	83	(113)	150	(203)	167	(226)	210	(285)
	18	95	(129)	170	(231)			240	(325)
3/4	10	105	(142)	270	(366)	280	(380)	375	(508)
	16	115	(156)	295	(400)			420	(569)
7/8	9	160	(217)	395	(536)	440	(597)	605	(820)
	14	175	(237)	435	(590)			675	(915)
1	8	235	(319)	590	(800)	660	(895)	910	(1,234)
	14	250	(339)	660	(895)			990	(1,342)

M116 M101 TL13

Figure 3. Torque Limits - SAE Fasteners.

INSTALLATION AND TORQUING - Continued

Thread Diameter – Pitch	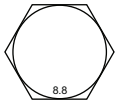 CLASS 8.8 BOLT	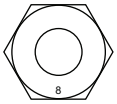 CLASS 8 NUT	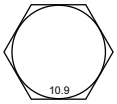 CLASS 10.9 BOLT	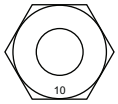
	TORQUE: LB – FT (N•m)		TORQUE: LB – FT (N•m)	
M6 M8 M8 x 1	5 (7) 12 (16) 13 (18)		7 (9) 17 (23) 18 (24)	
M10 M10 x 1.25	24 (33) 27 (37)		34 (46) 38 (52)	
M12 M12 x 1.5	42 (57) 43 (58)		60 (81) 62 (84)	
M14 M14 x 1.5	66 (89) 72 (98)		95 (129) 103 (140)	
M16 M16 x 1.5	103 (140) 110 (149)		148 (201) 157 (213)	
M18 M18 x 1.5	147 (199) 165 (224)		203 (275) 229 (310)	
M20 M20 x 1.5	208 (282) 213 (313)		288 (390) 320 (434)	
M22 M22 x 1.5	283 (384) 315 (427)		392 (531) 431 (584)	
M24 M24 x 2	360 (488) 392 (531)		498 (675) 542 (735)	
M27 M27 x 2	527 (715) 569 (771)		729 (988) 788 (1,068)	
M30 M30 x 2	715 (969) 792 (1,074)		990 (1,342) 1,096 (1,486)	

M116 M101 TL14

Figure 4. Torque Limits - Metric Fasteners.

END OF TASK

END OF WORK PACKAGE

FIELD MAINTENANCE
WIRING DIAGRAM

INITIAL SETUP:

Not Applicable

This wiring diagram is for the chassis wiring harness. Refer to this wiring diagram when performing troubleshooting or maintenance on the electrical system of the M101 and M116 Series trailers.

Table 1. Circuits.

Curb-Side Circuits		Road-Side Circuits	
22-460	Service Stoplight and Turn Signal	22-461	Service Stoplight and Turn Signal
23	Blackout Stoplight	23	Blackout Stoplight
24-483	Blackout Taillight and Turn Signal	24-484	Blackout Taillight and Turn Signal
21	Service Taillight	21	Service Taillight

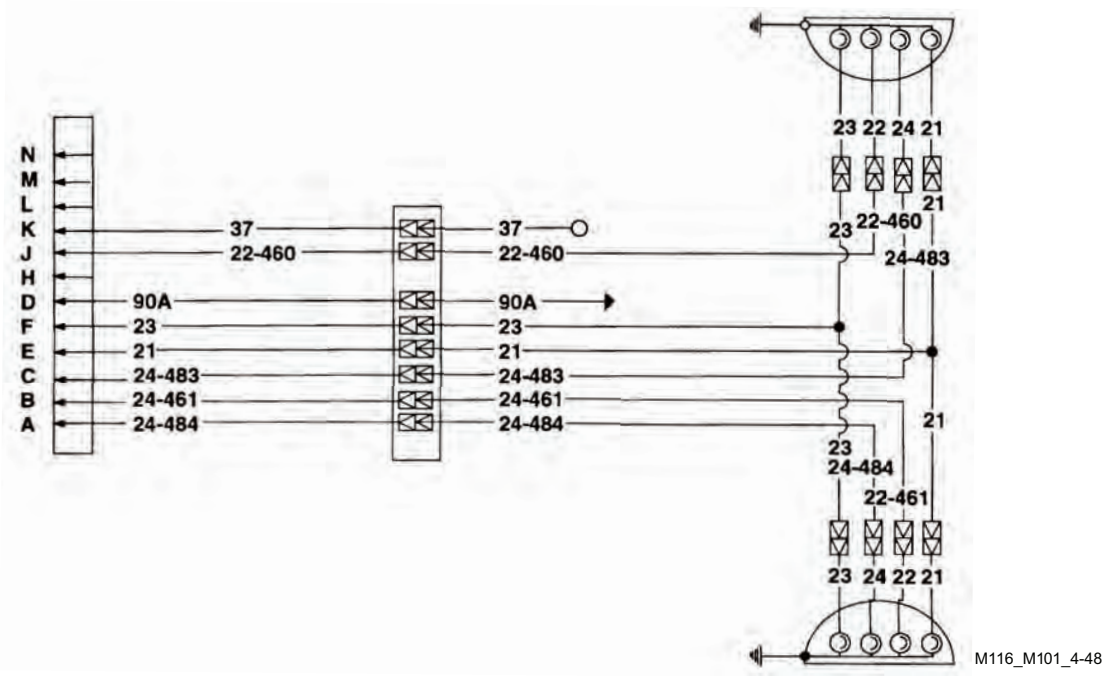

Figure 1. Wiring Diagram.

END OF WORK PACKAGE

CHAPTER 8

REPAIR PARTS AND SPECIAL TOOLS (RPSTL)

FIELD MAINTENANCE
REPAIR PARTS AND SPECIAL TOOLS (RPSTL) INTRODUCTION

INTRODUCTION

SCOPE

This RPSTL lists and authorizes spares and repair parts; special tools; special test, measurement, and diagnostic equipment (TMDE); and other special support equipment required for performance of Maintainer Maintenance of the M101 and M116 series trailers. It authorizes the requisitioning, issue, and disposition of spares, repair parts, and special tools as indicated by the Source, Maintenance, and Recoverability (SMR) codes.

GENERAL

In addition to the Introduction work package, this RPSTL is divided into the following work packages:

1. **Repair Parts List Work Packages.** Work packages containing lists of spares and repair parts authorized by this RPSTL for use for use in the performance of maintenance. These work packages also include parts which must be removed for replacement of the authorized parts. Parts lists are composed of functional groups in ascending alphanumeric sequence, with the parts in each group listed in ascending figure and item number sequence. Sending units, brackets, filters, and bolts are listed with the component they mount on. Bulk materials are listed by item name in FIG. BULK at the end of the work packages. Repair parts kits are listed separately in their own functional group and work package. Repair parts for reparable special tools are also listed in a separate work package. Items listed are shown on the associated illustrations.
2. **Special Tools List Work Packages.** Work packages containing lists of special tools, special TMDE, and special support equipment authorized by this RPSTL (as indicated by Basis of Issue (BOI) information in the DESCRIPTION AND USABLE ON CODE (UOC) column). Tools that are components of common tool sets and/or Class VII are not listed.
3. **Cross-Reference Indexes Work Packages.** There are two cross-reference indexes work packages in this RPSTL: The National Stock Number (NSN) Index work package, and the Part Number (P/N) Index work package. The National Stock Number Index work package refers you to the figure and item number.

EXPLANATION OF ENTRIES IN THE REPAIR PARTS LIST AND SPECIAL TOOLS LIST WORK PACKAGES

ITEM NO. (Column (1)). Indicates the number used to identify items called out in the illustration.

SMR CODE (Column (2)). The SMR code containing supply/requisitioning information, maintenance level authorization criteria, and disposition instruction, as shown in the following breakout. This entry may be subdivided into four subentries, one for each service.

Table 1. SMR Code Explanation.

Source Code	Maintenance Code		Recoverability Code
XX	XX		X
1st two positions: How to get an item.	3rd position: Who can install, replace, or use the item.	4th position: Who can do complete repair* on the item.	5th position: Who determines disposition action on unserviceable items.

NOTE

*Complete Repair: Maintenance capacity, capability, and authority to perform all corrective maintenance tasks of the "Repair" function in a use/user environment in order to restore serviceability to a failed item.

Source Code. The source code tells you how you get an item needed for maintenance, repair, or overhaul of an end item/equipment. Explanations of source codes follow:

Source Code	Application/Explanation
PA	**NOTE** Items coded PC are subject to deterioration. Stock items; use the applicable NSN to requisition/request items with these source codes. They are authorized to the level indicated by the code entered in the third position of the SMR code.
PB	
PC	
PD	
PE	
PF	
PG	
PH	
PR	
PZ	
KD	Items with these codes are not to be requested/requisitioned individually. They are part of a kit that is authorized to the maintenance level indicated in the third position of the SMR code. The complete kit must be requisitioned and applied.
KF	
KB	
MF-Made at field	Items with these codes are not to be requisitioned/requested individually. They must be made from bulk material which is identified by the part number in the DESCRIPTION AND USABLE ON CODE (UOC) column and listed in the bulk material group work package of the RPSTL. If the item is authorized to you by the third position code of the SMR code, but the source code indicates it is made at higher level, order the item from the higher level of maintenance.
MH-Made at below depot/sustainment level	
ML-Made at SRA	
MD-Made at depot	
MG-Navy only	
AF-Assembled by field	Items with these codes are not to be requested/requisitioned individually. The parts that make up the assembled item must be requisitioned or fabricated and assembled at the level of maintenance indicated by the source code. If the third position of the SMR code authorizes you to replace the item, but the source code indicates the item is assembled at a higher level, order the item from the higher level of maintenance.

AH-Assembled by below depot sustainment level	
AL-Assembled by SRA	
AD-Assembled by depot	
AG-Navy only	
XA	Do not requisition an "XA" coded item. Order the next higher assembly. (Refer to NOTE below.)
XB	If an item is not available from salvage, order it using the CAGEC and P/N.
XC	Installation drawings, diagrams, instruction sheets, field service drawings; identified by manufacturer's part number.
XD	Item is not stocked. Order an XD-coded item through local purchase or normal supply channels using the CAGEC and P/N given, if no NSN is available.

NOTE

Cannibalization or controlled exchange, when authorized, may be used as a source of supply for items with the above source codes except for those items source coded "XA" or those aircraft support items restricted by requirements of AR 750-1.

Maintenance Code. Maintenance codes tell you the level(s) of maintenance authorized to use and repair support items. The maintenance codes are entered in the third and fourth positions of the SMR code as follows:

Third Position. The maintenance code entered in the third position tells you the lowest maintenance class authorized to remove, replace, and use an item. The maintenance code entered in the third position will indicate authorization to the following classes of maintenance:

Maintenance Code	Application/Explanation
F -	Maintainer maintenance can remove, replace, and use the item.
H -	Below Depot Sustainment maintenance can remove, replace, and use the item.
L -	Specialized repair activity can remove, replace, and use the item.
G -	Afloat and ashore intermediate maintenance can remove, replace, and use the item (Navy only).
K -	Contractor facility can remove, replace, and use the item.
Z -	Item is not authorized to be removed, replace, or used at any maintenance level.
D -	Depot can remove, replace, and use the item.

NOTE

*Army will use C in the third position. However, for joint service publications, other services may use O.

Fourth Position. The maintenance code entered in the fourth position tells you whether or not the item is to be repaired and identifies the lowest maintenance level with the capability to do complete repair (perform all authorized repair functions).

NOTE

Some limited repair may be done on the item at a lower level of maintenance, if authorized by the Maintenance Allocation chart (MAC) and SMR codes.

Maintenance Code	Application/Explanation
F -	Field is the lowest level that can do complete repair of the item.
L -	Specialized repair activity (enter specialized repair activity or TASMG designator) is the lowest level that can do complete repair of the item.
D -	Depot is the lowest level that can do complete repair of the item.
G -	Both afloat and ashore intermediate levels are capable of complete repair of item (Navy only).
K -	Complete repair is done at contractor facility.
Z -	Nonreparable. No repair is authorized.
B -	No repair is authorized. No parts of special tools are authorized for maintenance of "B" coded item. However, the item may be reconditioned by adjusting, lubricating, etc., at the user level.

Recoverability Code. Recoverability codes are assigned to items to indicate the disposition action on unserviceable items. The recoverability code is shown in the fifth position of the SMR code as follows:

Recoverability Code	Application/Explanation
Z -	Nonreparable item. When unserviceable, condemn and dispose of the item at the level of maintenance shown in the third position of the SMR code.
O -	Reparable item. When uneconomically reparable, condemn and dispose of the item at the AMC level.
F -	Reparable item. When uneconomically reparable, condemn and dispose of the item at the ASB level.
D -	Reparable item. When beyond lower level repair capability, return to depot. Condemnation and disposal of item are not authorized below depot.
L -	Reparable item. Condemnation and disposal not authorized below TASMG.

A -	Item requires handling or condemnation procedures because of specific reasons (such as precious metal content, high dollar value, critical material, or hazardous material). Refer to appropriate manuals/directives for specific instructions.
G -	Filed level reparable item. Condemn and dispose at either afloat or ashore intermediate levels (Navy only).
K -	Reparable item. Condemnation and disposal to be performed at contractor facility.

NSN (Column (3)). The NSN(s) for the item is listed in this column.

CAGEC (Column (4)). The Commercial and Government Entity Code (CAGEC) is a five-digit code which is used to identify the manufacturer, distributor, or Government agency/activity that supplies the item.

PART NUMBER (Column (5)). Indicates the primary number used by the manufacturer (individual, company, firm, corporation, or Government activity), which controls the design and characteristics of the item by means of its engineering drawings, specifications, standards, and inspection requirements to identify an item or range of items.

NOTE

When you use an NSN to requisition an item, the item you receive may have a different part number from the number listed.

DESCRIPTION AND USABLE ON CODE (UOC) (Column (6)). This column includes the following information:

1. The federal item name, and when required, a minimum description to identify the item.
2. Part numbers of bulk materials are referenced in this column in the line entry to be manufactured or fabricated.
3. Hardness Critical Item (HCI). A support item that provides the equipment with special protection from electromagnetic pulse (EMP) damage during a nuclear attack.
4. The statement END OF FIGURE appears just below the last item description in column (6) for a given figure in both the repair parts list and special tools list work packages.

QTY (Column (7)). The QTY (quantity per figure) column indicates the quantity of the item used in the breakout shown on the illustration/figure. A "V" appearing in this column instead of a quantity is variable and quantity may change from application to application.

EXPLANATION OF CROSS-REFERENCE INDEXES WORK PACKAGES FORMAT AND COLUMNS

1. **National Stock Number (NSN) Index Work Package.** NSNs in this index are listed in National Item Identification Number (NIIN) sequence.
   STOCK NUMBER Column. This column lists the NSN in NIIN sequence. The NIIN consists of the last nine digits of the NSN. When using this column to locate an item, ignore the first four digits of the NSN. However, the complete NSN should be used when ordering items by stock number
   For example, if the NSN is 5385-01-574-1476, the NIIN is 01-574-1476.
   FIG. Column. This column lists the number of the figure where the item is identified/located. The figures are in numerical order in the repair parts list and special tools list work packages.
   ITEM Column. The item number is the number assigned with the item as it appears in the adjacent figure number column. This item is also identified by the NSN listed on the same line.
2. **Part Number (P/N) Index Work Package.** Part numbers in this index are listed in ascending alphanumeric sequence (vertical arrangement of letter and number combinations which places the first letter or digit of each group in order A through Z, followed by the numbers 0 through 9 and each following letter or digit in like order).
   PART NUMBER Column. This column indicates the part number assigned to the item.
   FIG. Column. This column lists the number of the figure where the item is identified/located in the repair parts list and special tools list work packages.
   ITEM Column. The item number is the number assigned to the item as it appears in the figure referenced in the adjacent figure number column.

SPECIAL INFORMATION

UOC. The UOC appears in the lower left corner of the Description Column heading. Usable on codes are shown as "UOC:..." in the Description Column (justified left) on the first line under the applicable item/nomenclature. Uncoded items are applicable to all models. Identification of the UOCs used in the RPSTL are:

Code	Used On
257	M101A1
263	M101A2
TC1	M101A3
646	M116A1
258	M116A2
CT1	M116A3

Fabrication Instructions. Bulk materials required to manufacture items are listed in the bulk material functional group of this RPSTL. Part numbers for bulk material are also referenced in the Description Column of the line item entry for the item to be manufactured/fabricated. Detailed fabrication instructions for items source coded to be manufactured or fabricated are found in (TM 9-2330-202-13&P).

Index Numbers. Items which have the word BULK in the figure column will have an index number shown in the item number column. This index number is a cross-reference between the NSN/Part Number (P/N) Index work packages and the bulk material list in the repair parts list work package.

HOW TO LOCATE REPAIR PARTS

1. When NSNs or Part Numbers Are Not Known.
   First. Using the table of contents, determine the assembly group to which the item belongs. This is necessary since figures are prepared for assembly groups and subassembly groups, and lists are divided into the same groups.
   Second. Find the figure covering the functional group or the subfunctional group to which the item belongs.
   Third. Identify the item on the figure and note the number(s).
   Fourth. Look in the repair parts list work packages for the figure and item numbers. The NSNs and part numbers are on the same line as the associated item numbers.
2. When NSN Is Known.
   First. If you have the NSN, look in the STOCK NUMBER column of the NSN/Part Number (P/N) Index work package. The NSN is arranged in NIIN sequence. Note the figure and item number next to the NSN.
   Second. Turn to the figure and locate the item number. Verify that the item is the one you are looking for.
3. When Part Number Is Known.
   First. If you have the part number and not the NSN, look in the PART NUMBER column of the NSN/Part Number (P/N) Index work package. Identify the figure and item number.
   Second. Look up the item on the figure in the applicable repair parts list work package."
4. When Reference Designator Is Known.
   First. If you know the reference designator, look in the REFERENCE DESIGNATOR column of the reference designator index work package. Note the figure and item number.
   Second. Turn to the figure and locate the item number. Verify that the item is the one you are looking for.

END OF WORK PACKAGE

FIELD MAINTENANCE
COMPOSITE STOPLIGHT-TAILLIGHT

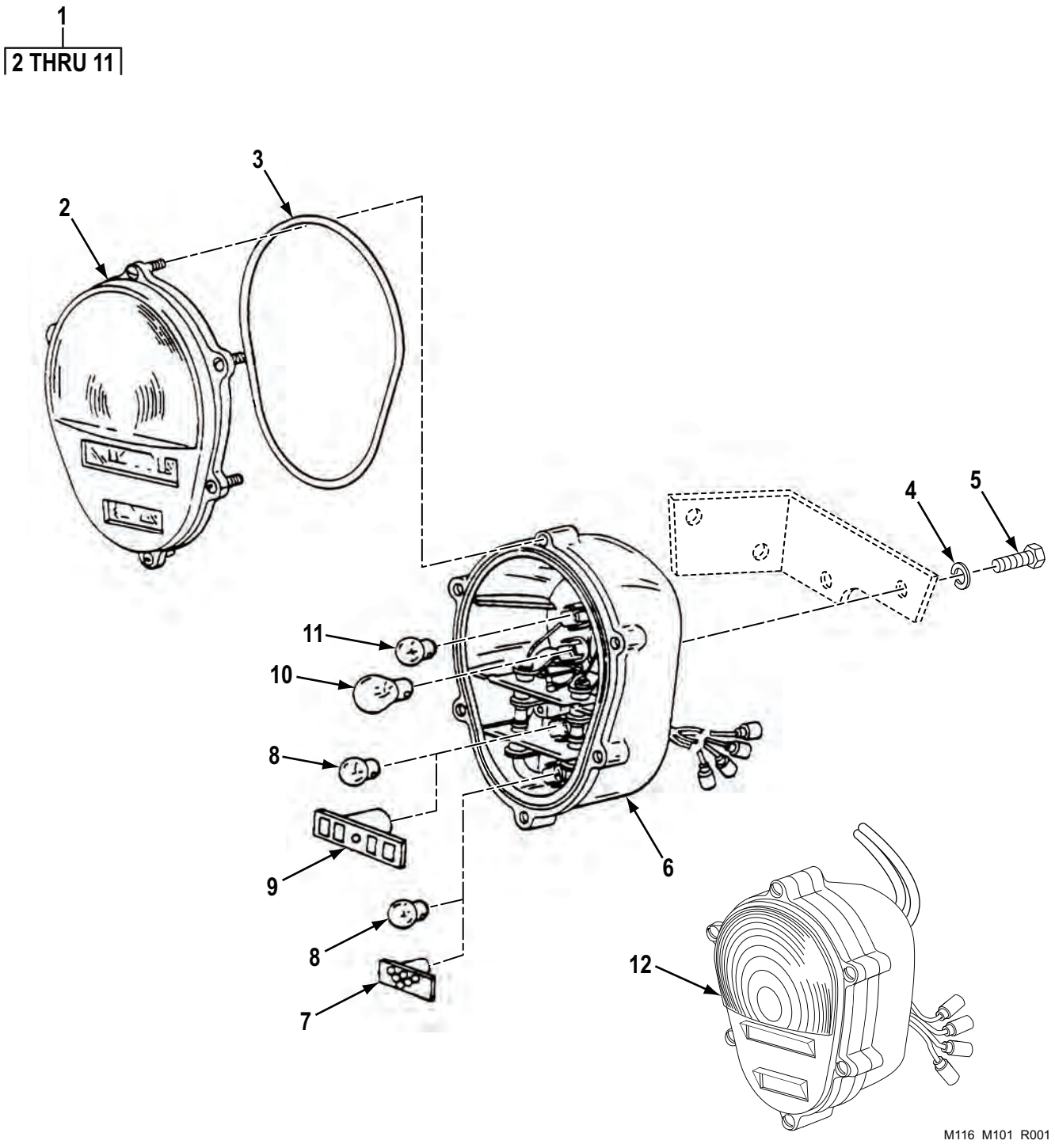

Figure 1. Composite Stoplight - Taillight. (Sheet 1 of 3)

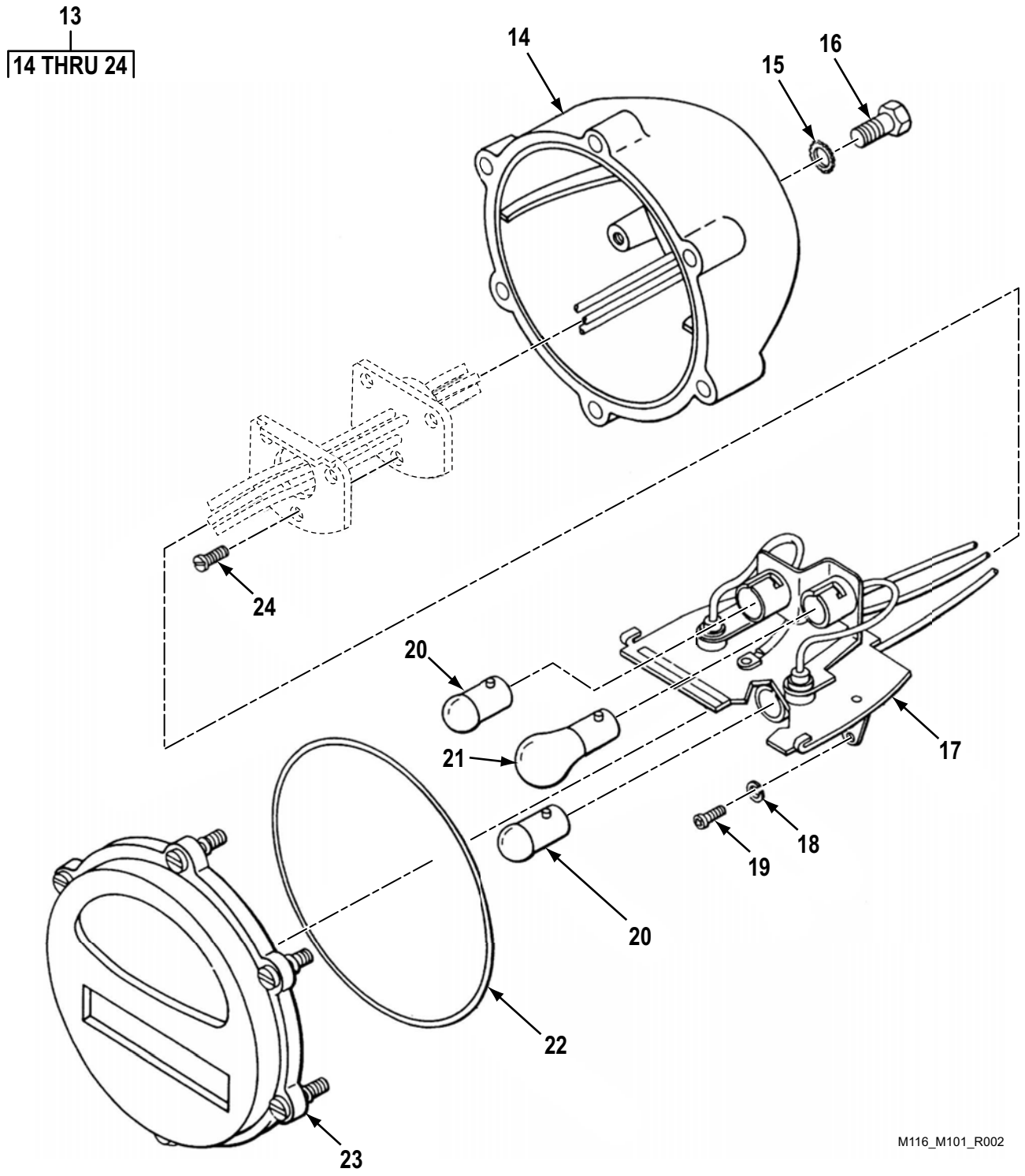

Figure 1. Composite Stoplight - Taillight. (Sheet 2 of 3)

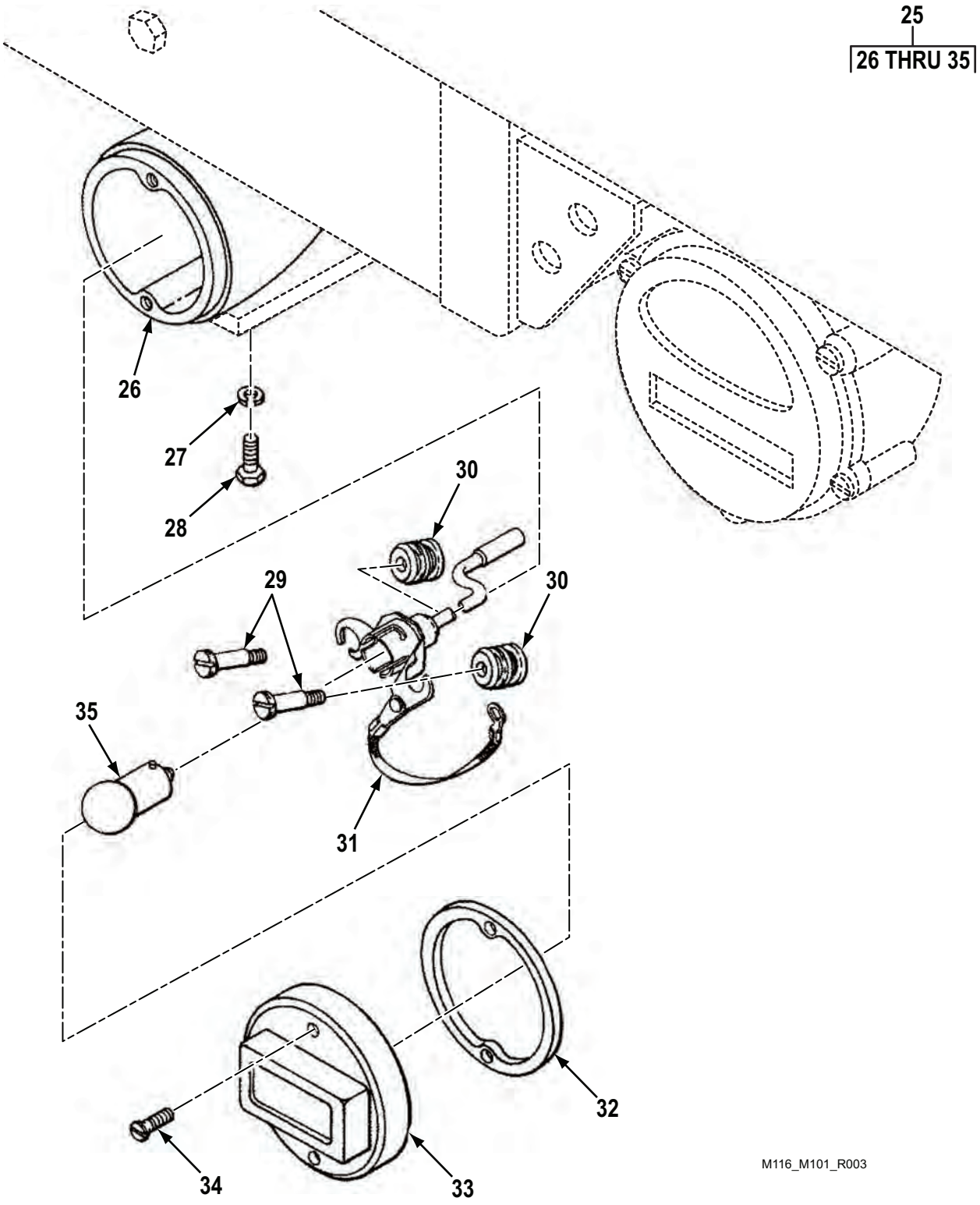

Figure 1. Composite Stoplight - Taillight. (Sheet 3 of 3)

(1) ITEM NO.	(2) SMR CODE	(3) NSN	(4) CAGEC	(5) PART NUMBER	(6) DESCRIPTION AND USABLE ON CODE (UOC)	(7) QTY
					GROUP 0609 LIGHTS	
					FIG. 1. COMPOSITE STOPLIGHT - TAILLIGHT.	
1	PAFFF	6220-01-372-3883	19207	12375837	TAILLIGHT,VEHICULAR COMPOSITE MARKER UOC: CT1,TC1,258,263	1
2	PAFZZ	6220-01-359-2870	19207	12375841	. LENS,LIGHT UOC: CT1,TC1,258,263	1
3	PAFZZ	5331-00-462-0907	19207	11639519-2	. O-RING UOC: CT1,TC1,258,263	1
4	PAFZZ	5310-00-637-9541	96906	MS35338-46	. WASHER,LOCK UOC: CT1,TC1,258,263	2
5	PAFZZ	5305-01-140-9118	80204	B1821BH038C088N	. SCREW,CAP,HEXAGON H UOC: CT1,TC1,258,263	2
6	XAFZZ		19207	12375838	. BODY ASSEMBLY UOC: CT1,TC1,258,263	1
7	PAFZZ	6220-01-293-2627	19207	12360870-1	. STOP LIGHT,VEHICULA 12V UOC: CT1,TC1,258,263	1
7	PAFZZ	6220-01-297-3217	19207	12360870-2	. STOP LIGHT,VEHICULA 24V UOC: CT1,TC1,258,263	1
8	PAFZZ	6240-00-155-8717	58536	AA52463-A04	. LAMP,INCANDESCENT 12V UOC: CT1,258,263	2
8	PAFZZ	6240-00-019-0877	58536	AA52463-A08	. LAMP,INCANDESCENT 24V UOC: CT1,TC1,258,263	2
9	PAFZZ	6220-01-284-2709	19207	12360850-1	. LIGHT,MARKER,CLEARA 24V UOC: CT1,TC1,258,263	1
10	PAFZZ	6240-00-044-6914	08108	1682	. LAMP,INCANDESCENT 24V UOC: CT1,TC1,258,263	1
10	PAFZZ	6240-00-617-0991	58536	A52463-2-13	. LAMP,INCANDESCENT 12V UOC: CT1,258,263	1
11	PAFZZ	6240-00-143-3159	58536	AA52463-A05	. LAMP,INCANDESCENT 12V UOC: CT1,258,263	1
11	PAFZZ	6240-00-019-3093	58536	AA52463-A09	. LAMP,INCANDESCENT 24V UOC: CT1,TC1,258,263	1
12	PAFZZ	6210-01-550-0490	13548	07426	LIGHT EMITTING DIOD UOC: CT1,TC1, 258,263	2
13	PAFFF	6220-00-337-6471	96906	MS51330-1	STOP LIGHT-TAILLIGH RIGHT HAND UOC: 257,646	1
13	PAFFF	6220-00-669-5623	96906	MS51329-1	STOP LIGHT-TAILLIGH LEFT HAND UOC: 257,646	1
14	PAFZZ	6220-00-500-0437	96906	MS53047-1	. LIGHT,PARKING UOC: 257,646	1
15	PAFZZ	5310-00-637-9541	80205	MS35338-46	. WASHER,LOCK UOC: 257,646	4
16	PAFZZ	5305-00-984-7350	96906	MS35191-308	. SCREW,MACHINE UOC: 257,646	2

(1) ITEM NO.	(2) SMR CODE	(3) NSN	(4) CAGEC	(5) PART NUMBER	(6) DESCRIPTION AND USABLE ON CODE (UOC)	(7) QTY
17	PAFZZ	6150-00-693-3452	5A910	8378661	. WIRING HARNESS UOC: 257,646	1
18	PAFZZ	5310-00-045-3299	80205	MS35338-42	. WASHER,LOCK UOC: 257,646	1
19	PAFZZ	5305-00-889-3002	96906	MS35206-242	. SCREW,MACHINE UOC: 257,646	1
20	PAFZZ	6240-00-155-8717	58536	AA52463-A04	. LAMP,INCANDESCENT 12V UOC: 257,646	2
20	PAFZZ	6240-00-019-0877	58536	AA52463-A08	. LAMP,INCANDESCENT 24V UOC: 257,646	2
21	PAFZZ		58536	A52463-2-13	. LAMP, INCANDESCENT 12V UOC: 257,646	1
21	PAFZZ	6240-00-044-6914	08108	1683	. LAMP,INCANDESCENT 24V UOC: 257,646	1
22	PAFZZ	5331-00-297-7106	19207	7320658	. O-RING UOC: 257,258,263	1
23	PAFZZ	6220-00-752-6020	19207	7526020	. RETAINER,LENS LEFT UOC: 257,646	1
23	PAFZZ	6220-00-752-6018	19207	7526018	. RETAINER,LENS RIGHT UOC: 257,646	1
24	PAFZZ	5305-00-984-6191	80205	MS35206-243	. SCREW,MACHINE UOC: 257,646	1
25	PAFFF	6220-00-846-9745	96906	MS51302-1	STOP LIGHT,VEHICULA BLACKOUT UOC: 257,646	1
26	PAFZZ	6220-00-433-5966	19207	8741650	. HOUSING,LIGHT UOC: 257,646	1
27	PAFZZ	5310-00-407-9566	19207	7410218	. WASHER,LOCK UOC: 257,646	1
28	PAFZZ		80205	MS90726-29	. BOLT, MACHINE UOC: 257,646	1
29	PAFZZ	5305-00-633-0785	19207	8335233	. SCREW,SHOULDER UOC: 257,646	2
30	PCFZZ	5325-00-623-0928	56161	10511558	. GROMMET,NONMETALLIC UOC: 257,646	2
31	PAFZZ	6250-00-741-5451	19207	8741651	. LAMPHOLDER UOC: 257,646	1
32	PAFZZ	5330-00-678-9047	73331	5942528	. GASKET UOC: 257,646	1
33	PAFZZ	6220-00-775-2384	19207	8741646	. RETAINER,LENS UOC: 257,646	1
34	PAFZZ	5305-00-764-0070	80205	MS51959-46	. SCREW,MACHINE UOC: 257,646	2
35	PAFZZ	6240-00-019-0877	58536	AA52463-A08	. LAMP,INCANDESCENT 24V UOC: 257,646	1

(1) ITEM NO.	(2) SMR CODE	(3) NSN	(4) CAGEC	(5) PART NUMBER	(6) DESCRIPTION AND USABLE ON CODE (UOC)	(7) QTY
35	PAFZZ	6240-00-155-8717	58536	AA52463-A04	. LAMP,INCANDESCENT 12V UOC: 257,646	1

END OF FIGURE

FIELD MAINTENANCE
CHASSIS WIRING HARNESS (COMPOSITE STOPLIGHT-TAILLIGHT)

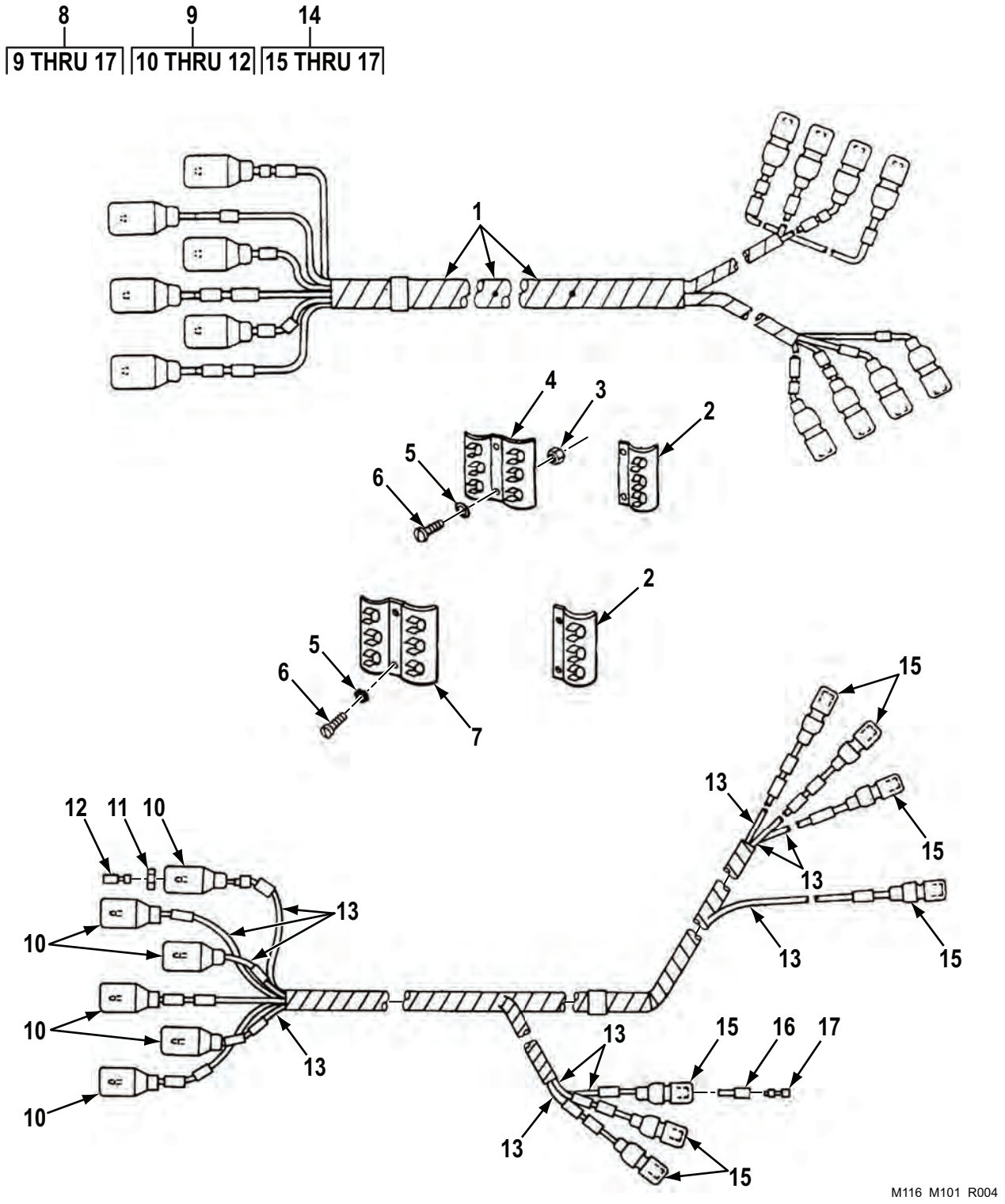

Figure 2. Chassis Wiring Harness (Composite Stoplight - Taillight).

(1) ITEM NO.	(2) SMR CODE	(3) NSN	(4) CAGEC	(5) PART NUMBER	(6) DESCRIPTION AND USABLE ON CODE (UOC)	(7) QTY
					GROUP 0613 HULL OR CHASSIS WIRING HARNESS	
					FIG. 2. CHASSIS WIRING HARNESS (COMPOSITE STOPLIGHT - TAILLIGHT).	
1	PAFFF	6150-01-543-4426	19207	11652180-2	WIRING HARNESS UOC: CT1,TC1	1
1	PAFFF	6150-01-167-1827	19207	11652180	WIRING HARNESS USED ON VEHICLES W/ COMPOSITE STOPLIGHT-TAILIGHT, 118 INCHES LONG UOC: 258,263	1
2	PAFZZ	5342-00-040-2364	19207	8347212	CLIP ASSEMBLY UOC: 257,258,263,646	1
2	PAFZZ	5340-00-860-0555	19207	8722870	CLIP,SPRING TENSION UOC: CT1,TC1	2
2	PAFZZ	2590-00-832-9976	19207	8722943	CLIP ASSEMBLY,CONNE UOC: CT1,TC1	2
3	PAFZZ	5310-00-934-9758	80205	MS35649-202	NUT,PLAIN,HEXAGON UOC: CT1,TC1	4
4	PAFZZ	5340-00-040-2365	19207	8347213	CLIP,SPRING TENSION UOC: 258,263	1
5	PAFZZ	5310-00-285-7037	96906	MS122031	WASHER,LOCK UOC: 257,258,263,646	4
5	PAFZZ	5310-00-045-3296	80205	MS35338-43	WASHER,LOCK UOC: CT1,TC1	4
6	PAFZZ	5305-00-881-3824	19207	171591	SCREW,TAPPING UOC: 257,258,263	4
6	PAFZZ	5305-00-984-6210	80205	MS35206-263	SCREW,MACHINE UOC: CT1,TC1	4
7	PAFZZ	5340-00-040-2365	19207	8347213	CLIP,SPRING TENSION UOC: 257,646	1
8	PAFFF	2590-00-830-6673	19207	8722819	WIRING HARNESS,BRAN USE ON VEHICLES W/ BLACKOUT-STOPLIGHT NSN 6220008469745 UOC: 257,646	1
9	PAFFF	5935-00-462-6603	96906	MS27142-2	. CONNECTOR,PLUG,ELEC UOC: 257,646	6
10	PAFZZ	5935-00-572-9180	19207	8338566	. . SHELL,ELECTRICAL CO UOC: 257,646	1
11	PAFZZ	5310-00-833-8567	19207	8338567	. . WASHER,SLOTTED UOC: 257,646	1
12	PAFZZ	5999-00-057-2929	19204	572929	. . CONTACT,ELECTRICAL UOC: 257,646	1
13	MFFZZ		19207	7720853-1	. WIRE ,ELECTRICAL MAKE FROM WIRE P/N MILC13486/1-5 UOC: 257,646	7

(1) ITEM NO.	(2) SMR CODE	(3) NSN	(4) CAGEC	(5) PART NUMBER	(6) DESCRIPTION AND USABLE ON CODE (UOC)	(7) QTY
14	PAFFF	5935-00-167-7775	96906	MS27144-1	. CONNECTOR,PLUG,ELEC UOC: 257,646	7
15	PAFZZ	5935-00-833-8561	19207	8338561	. . SHELL,ELECTRICAL CO UOC: 257,646	1
16	PAFZZ	5970-00-833-8562	19207	8338562	. . INSULATOR,BUSHING UOC: 257,646	1
17	PAFZZ	5940-00-399-6676	19207	8338564	. . TERMINAL SET,QUICK UOC: 257,646	1

END OF FIGURE

FIELD MAINTENANCE
INTERVEHICULAR CABLE

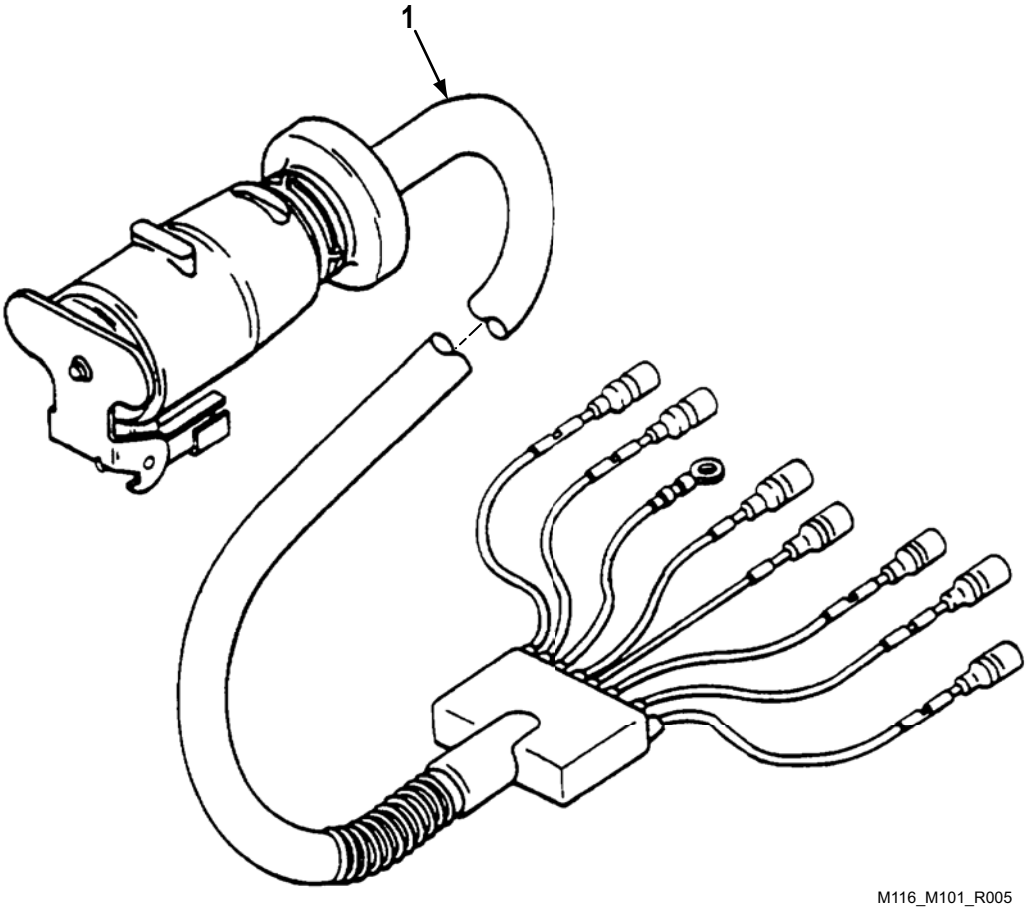

Figure 3. Intervehicular Cable.

(1) ITEM NO.	(2) SMR CODE	(3) NSN	(4) CAGEC	(5) PART NUMBER	(6) DESCRIPTION AND USABLE ON CODE (UOC)	(7) QTY
					GROUP 0613 HULL OR CHASSIS WIRING HARNESS	
					FIG. 3. INTERVEHICULAR CABLE.	
1	PAFZZ	6150-00-830-6672	19207	8722865	CABLE ASSEMBLY,SPEC INTERVEHICULAR	1
					END OF FIGURE	

FIELD MAINTENANCE
WIRING HARNESS AND INTERVEHICULAR CABLE ATTACHMENTS

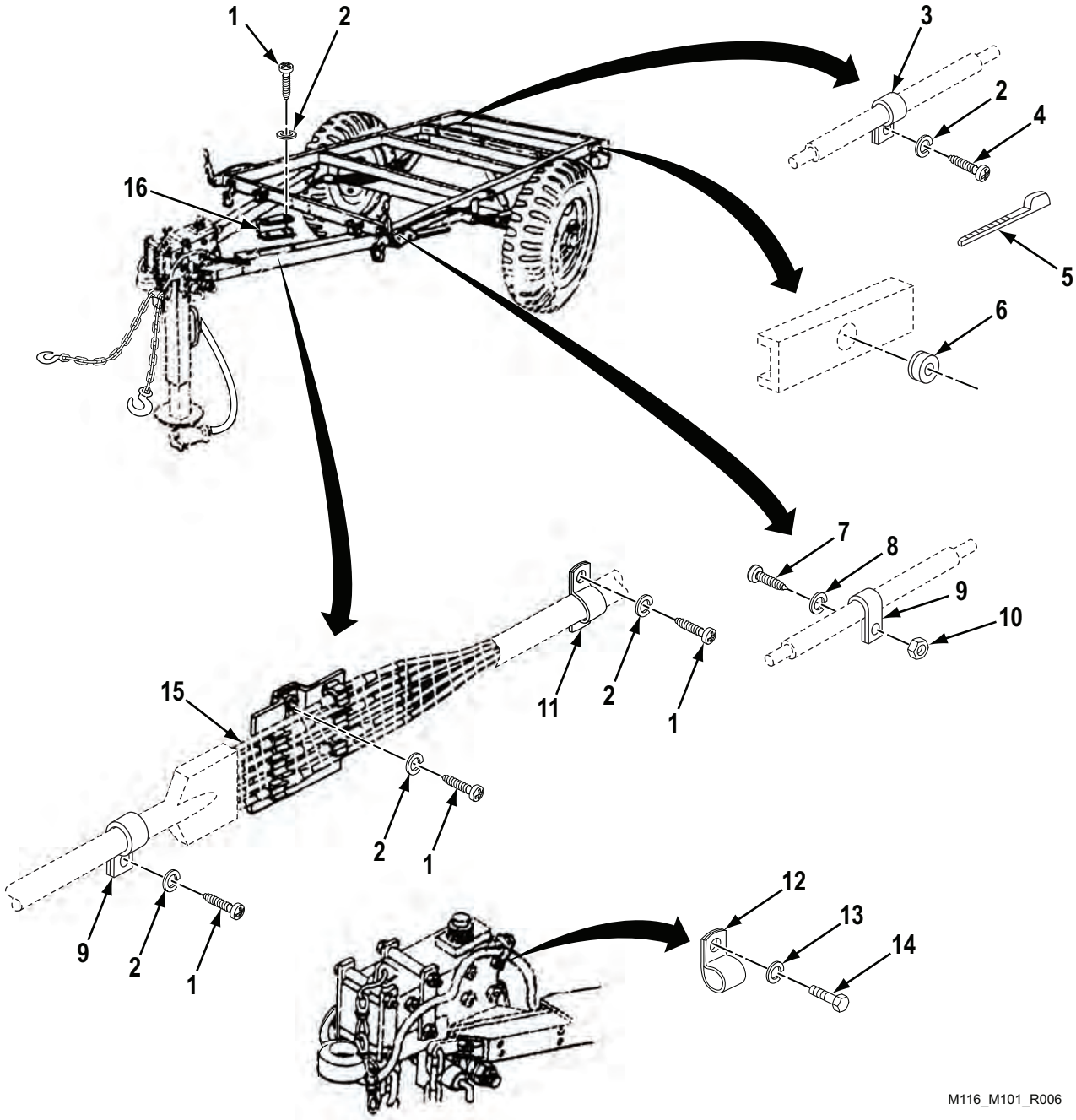

Figure 4. Wiring Harness and Intervehicular Cable Attachments. (Sheet 1 of 2)

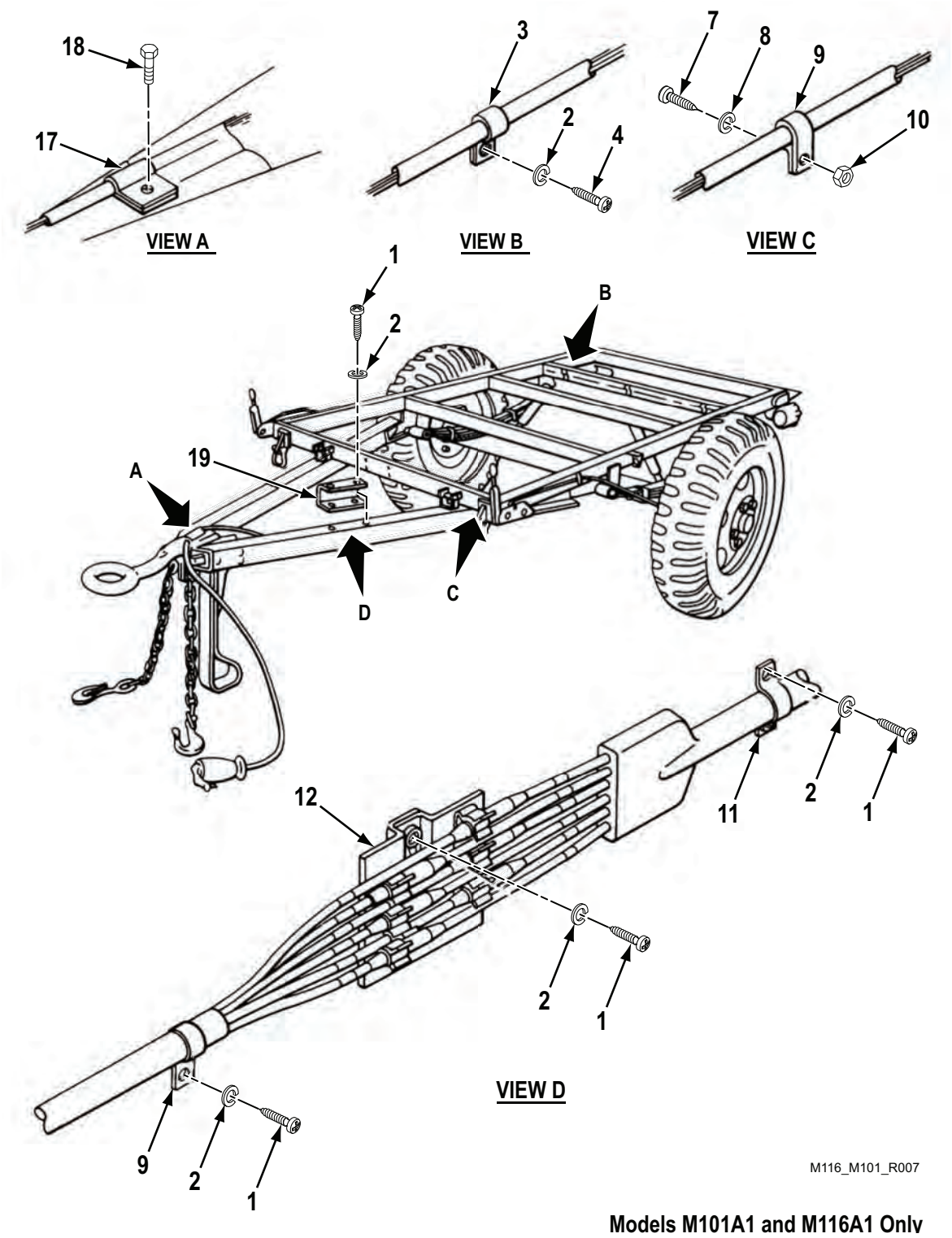

Figure 4. Wiring Harness and Intervehicular Cable Attachments. (Sheet 2 of 2)

(1) ITEM NO.	(2) SMR CODE	(3) NSN	(4) CAGEC	(5) PART NUMBER	(6) DESCRIPTION AND USABLE ON CODE (UOC)	(7) QTY
					GROUP 0613 HULL OR CHASSIS WIRING HARNESS	
					FIG. 4. WIRING HARNESS AND INTERVEHICULAR CABLE ATTACHMENTS.	
1	PAFZZ	5305-00-855-0957	45152	2477HX	SCREW,TAPPING	11
2	PAFZZ	5310-00-395-2948	96906	MS45904-64	WASHER,LOCK	11
3	PAFZZ	5340-00-385-3288	19207	7979250	CLAMP,LOOP	10
4	PAFZZ	5305-00-432-4203	96906	MS51861-47	SCREW,TAPPING	10
5	PAFZZ	5975-00-074-2072	81343	MS3367-1-9	STRAP,TIEDOWN,ELECT UOC: CT1,TC1	2
6	PCFZZ	5325-00-185-0001	96906	MS35489-46	GROMMET,NONMETALLIC UOC: CT1,TC1,258,263	2
7	PAFZZ	5305-00-984-6210	80205	MS35206-263	SCREW,MACHINE	1
8	PAFZZ	5310-00-045-3296	80205	MS35338-43	WASHER,LOCK	1
9	PAFZZ	5340-00-282-7515	80205	MS21333-37	CLAMP,LOOP	2
10	PAFZZ	5310-00-934-9758	80205	MS35649-202	NUT,PLAIN,HEXAGON	1
11	PAFZZ	5340-00-177-7832	19207	8382973	STRAP,RETAINING	1
12	PAFZZ	5340-01-132-1175	19207	7336030	CLAMP,LOOP UOC: CT1,TC1,258,263	1
13	PAFZZ	5310-00-637-9541	80205	MS35338-46	WASHER,LOCK UOC: CT1,TC1,258,263	1
14	PAFZZ	5305-00-269-3234	80204	B1821BH038F075N	SCREW,CAP,HEXAGON H UOC: CT1,TC1,258,263	1
15	PAFZZ	5340-00-860-0555	19207	8722870	CLIP,SPRING TENSION	2
16	PAFZZ	5975-01-170-3480	19207	10924576	COVER,JUNCTION BOX UOC: CT1,TC1,258,263	1
17	PAFZZ	5340-00-912-8871	96906	MS21333-43	CLAMP,LOOP UOC: 257,646	1
18	PAFZZ	5305-00-068-0500	51436	95053070	SCREW,CAP,HEXAGON H UOC: 257,646	1
19	PAFZZ	5975-00-040-2363	19207	8330140	COVER,WIRING JUNCTI UOC: 257,646	1

END OF FIGURE

FIELD MAINTENANCE
REAR AXLE ASSEMBLY

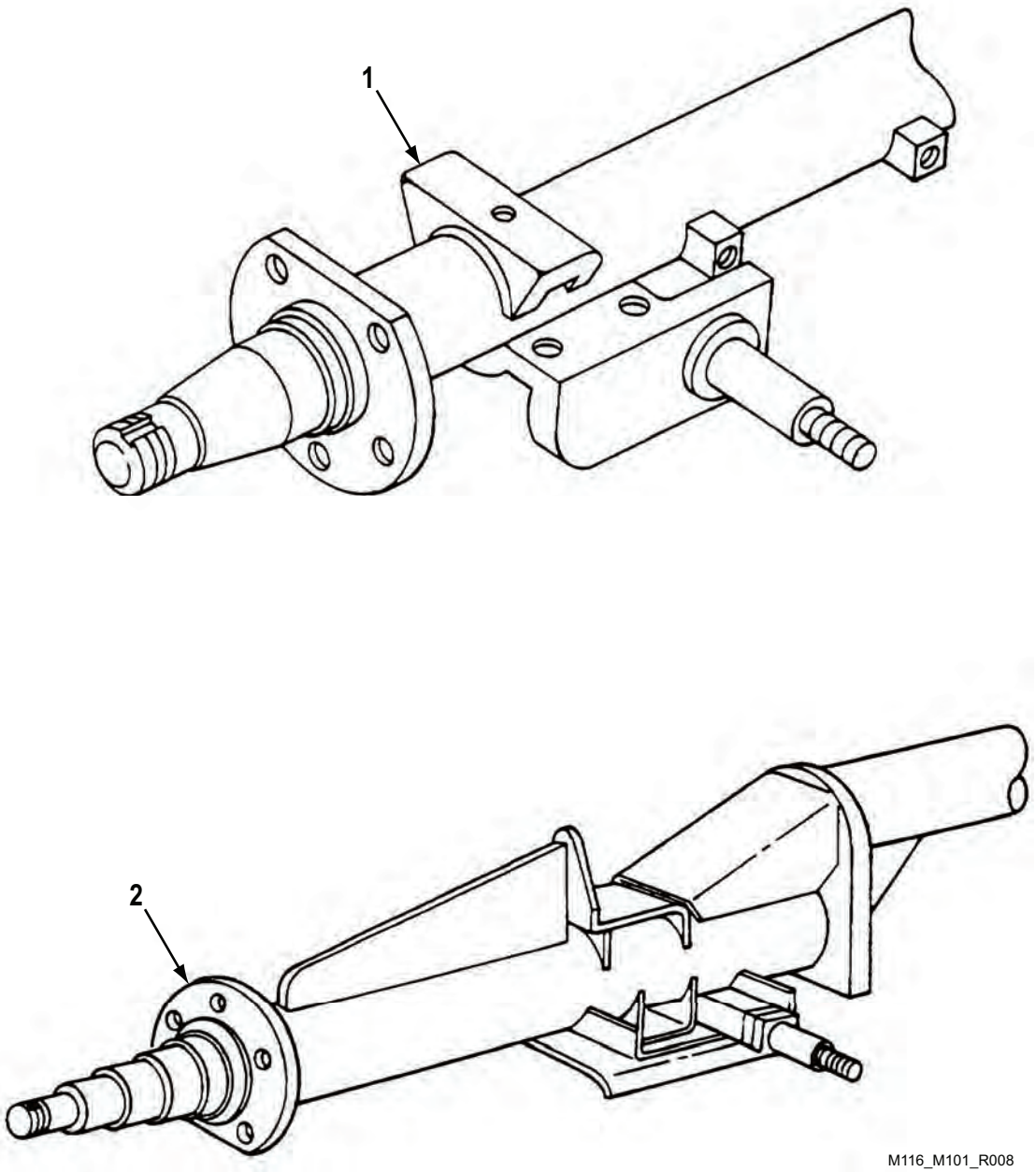

Figure 5. Rear Axle Assembly. (Sheet 1 of 2)

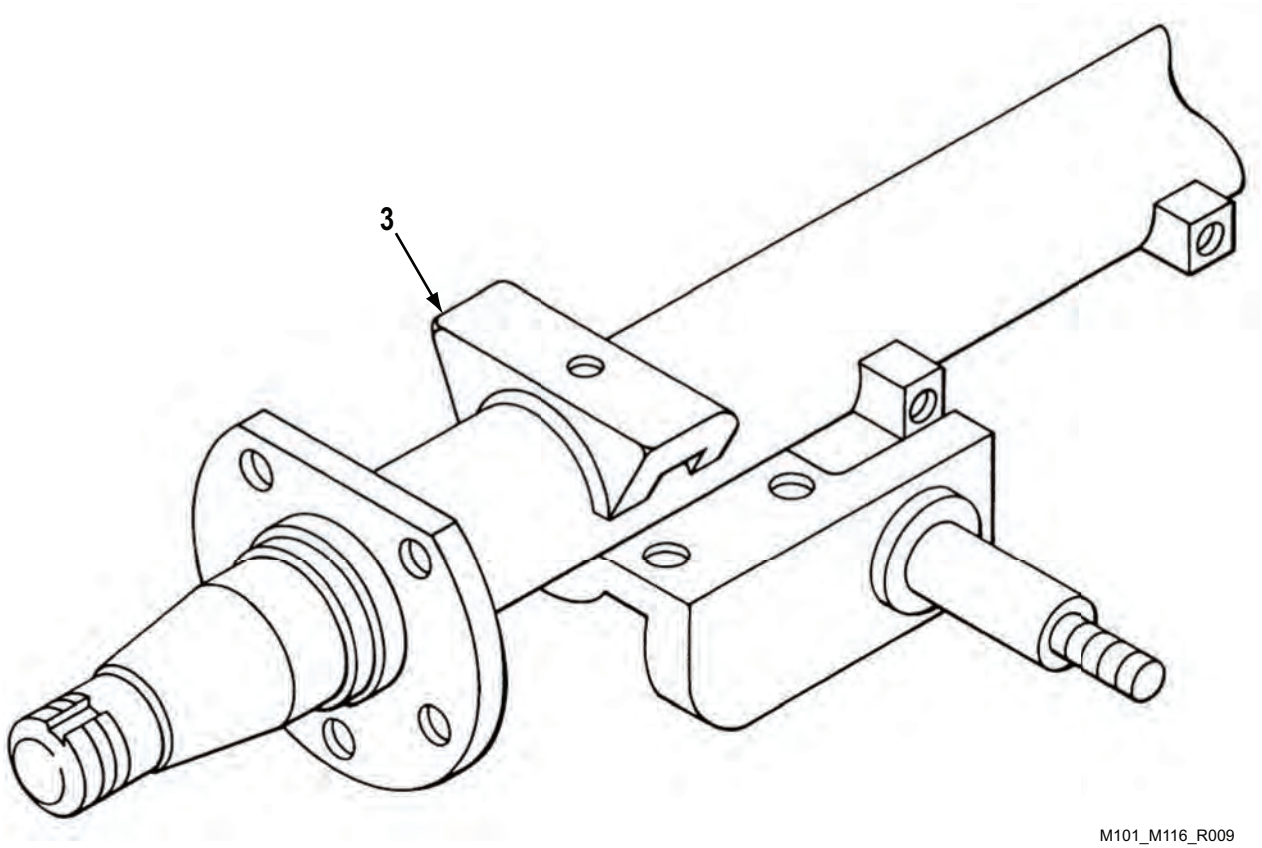

Models M101A1 and M116A1 Only

Figure 5. Rear Axle Assembly. (Sheet 2 of 2)

(1) ITEM NO.	(2) SMR CODE	(3) NSN	(4) CAGEC	(5) PART NUMBER	(6) DESCRIPTION AND USABLE ON CODE (UOC)	(7) QTY
					GROUP 1100 REAR AXLE ASSEMBLY	
					FIG. 5. REAR AXLE ASSEMBLY.	
1	PAFZZ	2530-01-138-9385	19207	12313006	AXLE,VEHICULAR,NOND W/FLANGE AND SPRING SEAT ASSEMBLY UOC: 258,263	1
2	PAFZZ	2530-01-390-4684	19207	12362791	AXLE,VEHICULAR,NOND OFFSET UOC: CT1,TC1	1
3	PAFZZ	2530-00-064-8102	19207	10919707	AXLE,VEHICULAR,NOND W/FLANGE AND SPRING SEAT ASSEMBLY UOC: 257,646	1

END OF FIGURE

FIELD MAINTENANCE
CABLE AND CONDUIT ASSEMBLY

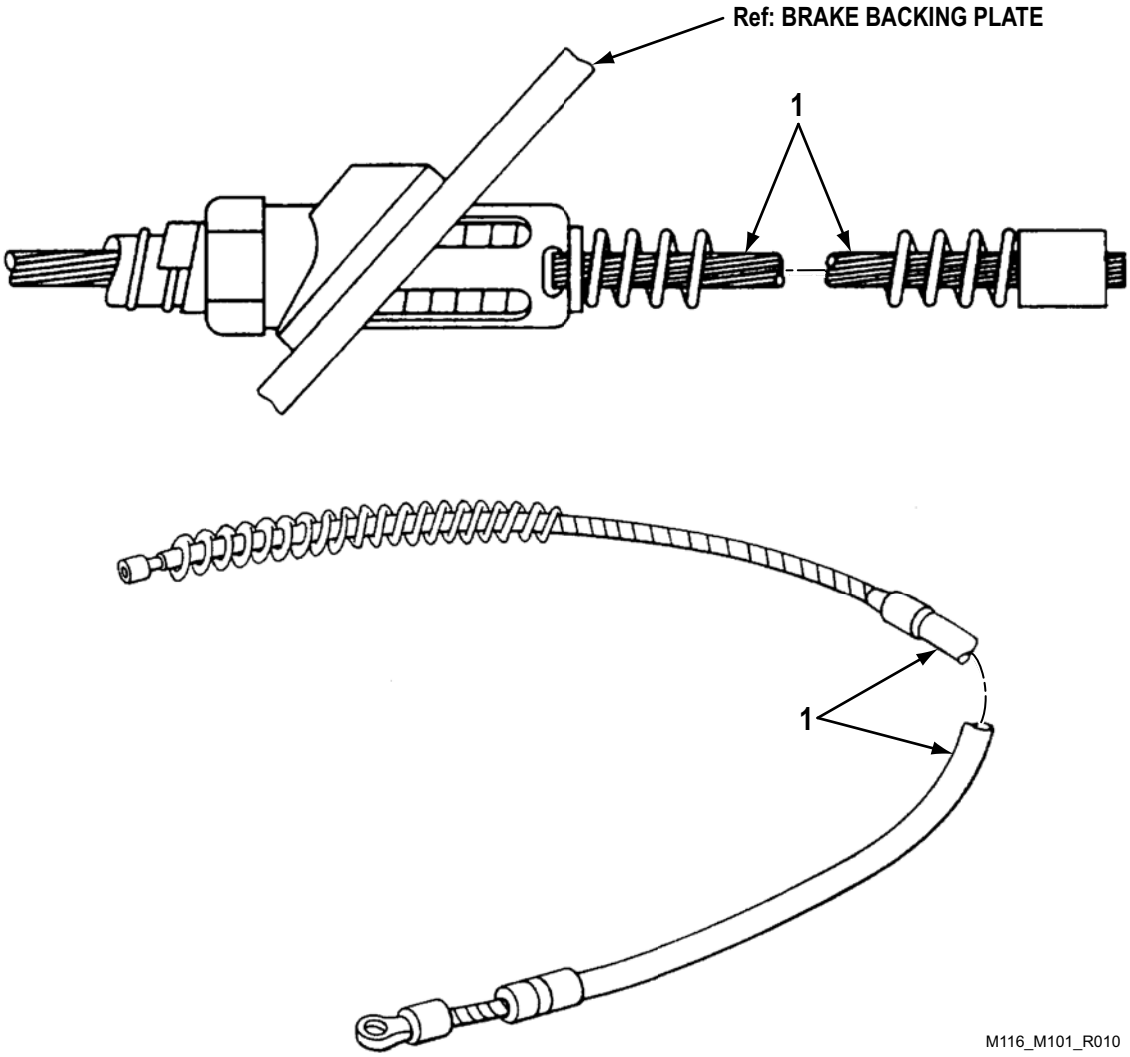

Figure 6. Cable and Conduit Assembly.

(1) ITEM NO.	(2) SMR CODE	(3) NSN	(4) CAGEC	(5) PART NUMBER	(6) DESCRIPTION AND USABLE ON CODE (UOC)	(7) QTY
					GROUP 1201 HANDBRAKES	
					FIG. 6. CABLE AND CONDUIT ASSEMBLY.	
1	PAFZZ	2530-01-429-8346	92867	15641501	CABLE AND CONDUIT A 74 INCHES LONG UOC: CT1,TC1	1
1	PAFZZ	2530-00-967-6278	92867	15785800	CONTROL ASSEMBLY,PU HAND BRAKE 67.125" LONG UOC: 257,646	2
1	PAFZZ	2530-01-168-7906	19207	11686101	CABLE AND CONDUIT A 69 INCHES LONG UOC: 258,263	1

END OF FIGURE

FIELD MAINTENANCE
HANDBRAKE LEVER

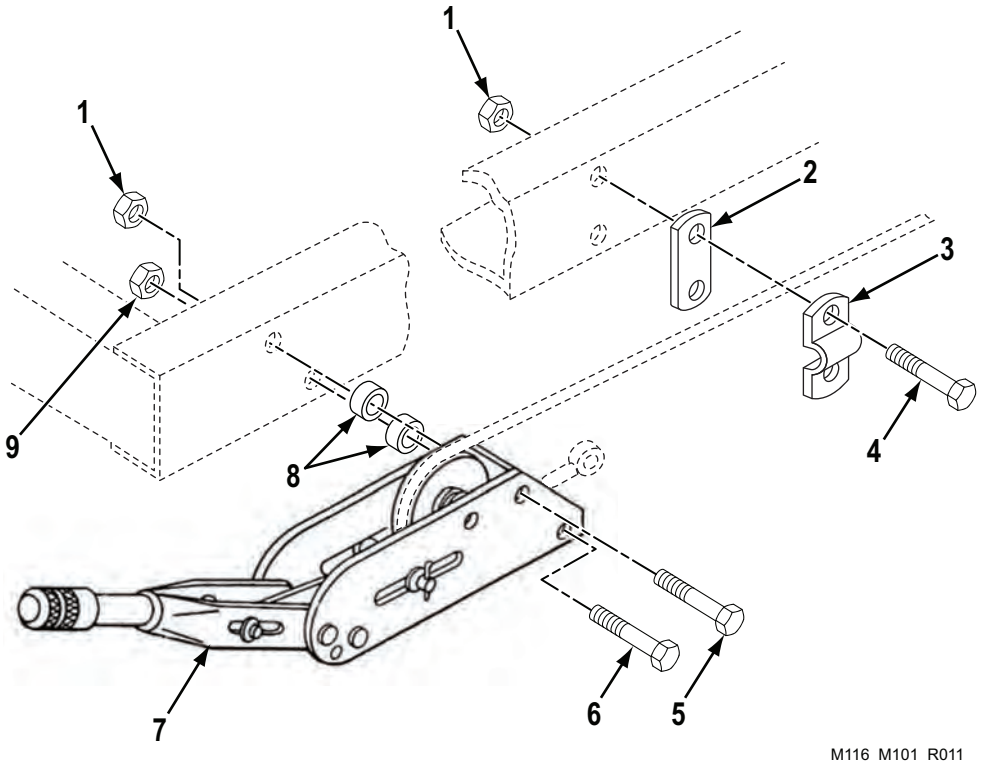

Figure 7. Handbrake Lever. (Sheet 1 of 2)

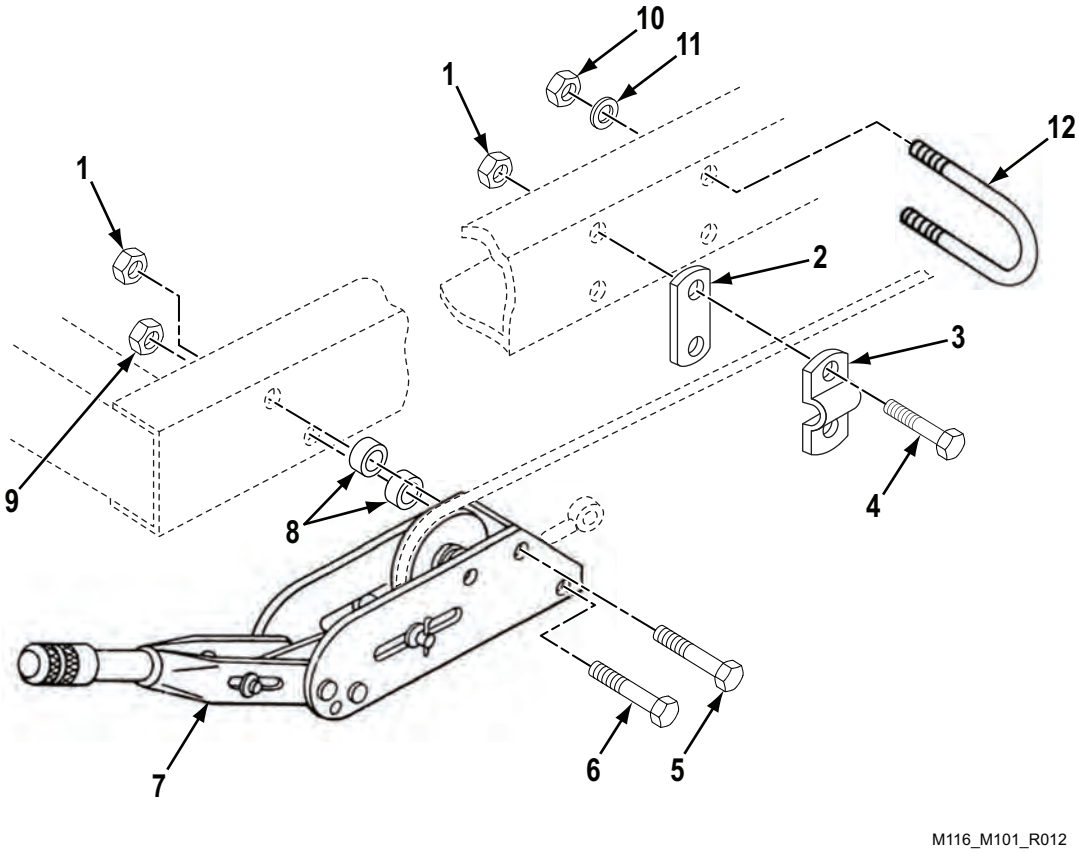

Models M101A1 and M116A1 Only

Figure 7. Handbrake Lever. (Sheet 2 of 2)

(1) ITEM NO.	(2) SMR CODE	(3) NSN	(4) CAGEC	(5) PART NUMBER	(6) DESCRIPTION AND USABLE ON CODE (UOC)	(7) QTY
					GROUP 1201 HANDBRAKES	
					FIG. 7. HANDBRAKE LEVER.	
1	PAFZZ	5310-00-807-1469	80205	MS21042-5	NUT,SELF-LOCKING,EX	6
2	PAFZZ	5365-00-475-8291	19207	10926075	SPACER,PLATE BRAKE CABLE	2
3	PAFZZ	5340-01-070-4475	92867	81-000108	STRAP,RETAINING BRAKE CABLE	2
4	PAFZZ	5305-00-958-0605	80205	MS35207-298	SCREW,MACHINE	4
5	PAFZZ	5305-00-269-2811	80205	MS90726-67	SCREW,CAP,HEXAGON H	2
6	PAFZZ	5306-00-225-9096	80205	MS90726-41	BOLT,MACHINE	2
7	PAFZZ	5340-00-936-5284	19207	10926073	LEVER,MANUAL CONTRO	2
8	PAFZZ	5310-01-139-2070	19207	10926094	WASHER,FLAT	4
9	PAFZZ	5310-00-810-1786	80205	MS21042-6	NUT,SELF-LOCKING,EX	2
10	PAFZZ	5310-00-761-6882	96906	MS51967-2	NUT,PLAIN,HEXAGON UOC: TC1,257,263,646	2
11	PAFZZ	5310-00-407-9566	96906	MS35338-45	WASHER,LOCK UOC: 257,646	2
12	PAFZZ	5306-00-308-1392	39428	3043T11	BOLT,U	4

END OF FIGURE

FIELD MAINTENANCE
BRAKE ASSEMBLY

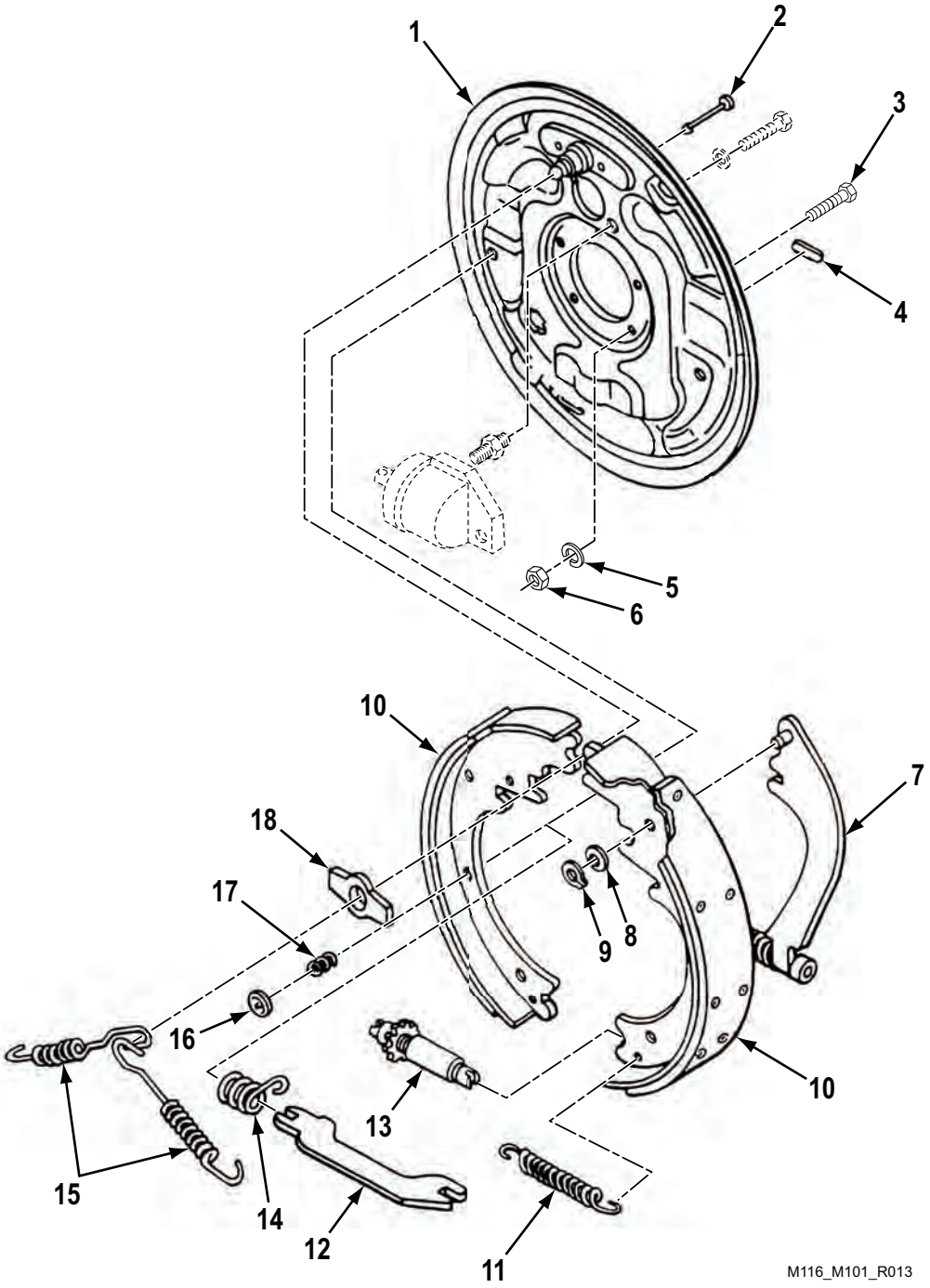

Figure 8. Brake Assembly. (Sheet 1 of 2)

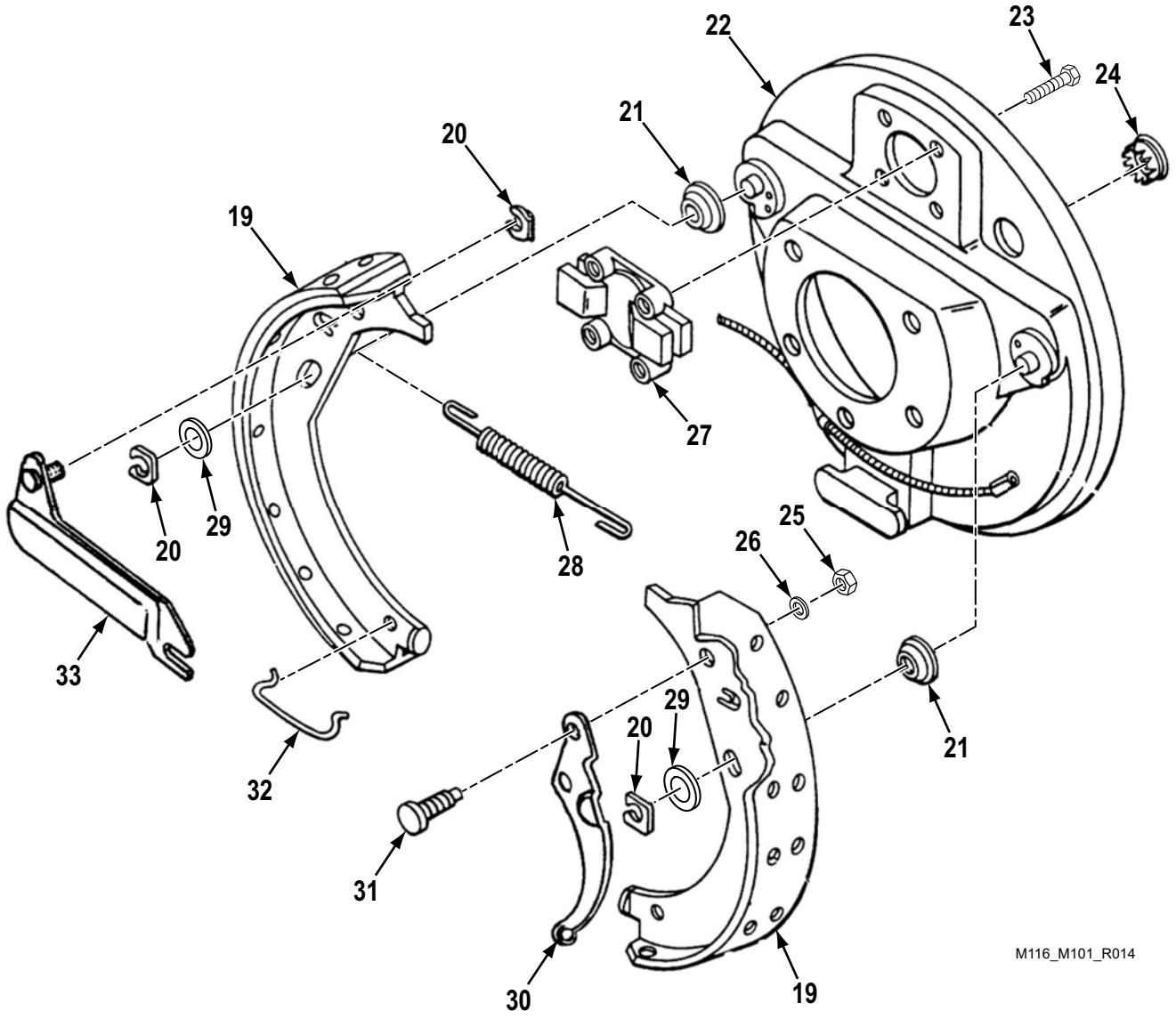

Figure 8. Brake Assembly. (Sheet 2 of 2)

(1) ITEM NO.	(2) SMR CODE	(3) NSN	(4) CAGEC	(5) PART NUMBER	(6) DESCRIPTION AND USABLE ON CODE (UOC)	(7) QTY
					GROUP 1202 SERVICE BRAKES	
					FIG. 8. BRAKE ASSEMBLY.	
1	PAFZZ	2530-01-287-6869	1TUY2	4485900042	PLATE,BACKING,BRAKE UOC: CT1,TC1,258,263	2
2	PAFZZ	5315-01-079-1494	19207	11686273	PIN,TOGGLE,HEADED UOC: CT1,TC1,258,263	2
3	PAFZZ	5305-00-269-3236	80204	B1821BH038F100N	SCREW,CAP,HEXAGON H UOC: CT1,TC1,258,263	5
4	PAFZZ	5340-01-071-2098	19207	11686276	COVER,ACCESS UOC: CT1,TC1,258,263	1
5	PAFZZ	5310-00-637-9541	80205	+MS35338-46	WASHER,LOCK UOC: CT1,TC1,258,263	5
6	PAFZZ	5310-00-732-0559	96906	MS51968-8	NUT,PLAIN,HEXAGON UOC: CT1,TC1,258,263	5
7	PAFZZ	3040-00-872-8567	19207	11686262-2	LEVER,MANUAL CONTRO UOC: CT1,TC1,258,263	1
7	PAFZZ	5340-01-069-6705	19207	11686262-1	LEVER,LOCK-RELEASE UOC: CT1,TC1,258,263	1
8	PAFZZ	5310-00-874-2922	19207	11686280	WASHER,SPRING TENSI UOC: CT1,TC1,258,263	1
9	PAFZZ	5310-01-074-9323	19207	11686281	CLIP,RETAINING UOC: CT1,TC1,258,263	1
10	PAFZZ	2530-01-216-9259	19204	11838714	BRAKE SHOE SET SET CONTAINS 2 BRAKE SHOES UOC: CT1,TC1,258,263	1
11	PAFZZ	5360-00-384-0025	19207	11686270	SPRING,HELICAL,EXTE UOC: CT1,TC1,258,263	1
12	PAFZZ	2530-01-430-7250	19207	12448059	STRUT,PARKING BRAKE RH UOC: CT1,258,263	1
12	PAFZZ	2530-01-074-7001	19207	12448035	STRUT,PARKING BRAKE LH UOC: CT1,258,263	1
13	PAFZZ	2530-01-070-9494	19207	11686257	SCREW,ADJUSTING UOC: CT1,TC1,258,263	1
14	PAFZZ	5360-00-877-2964	19207	11686279	SPRING,HELICAL,COMP UOC: CT1,TC1,258,263	1
15	PAFZZ	5360-00-384-0004	19207	11686272	SPRING,HELICAL,EXTE UOC: CT1,TC1,258,263	2
16	PAFZZ	5340-01-068-6693	19207	11686275	RETAINER,HELICAL CO UOC: CT1,TC1,258,263	2
17	PAFZZ	5360-01-088-0552	19207	11686274	SPRING,HELICAL,COMP UOC: CT1,TC1,258,263	2
18	PAFZZ	1005-01-083-9297	19207	11686271	PLATE,SHOE GUIDE UOC: CT1,TC1,258,263	1

(1) ITEM NO.	(2) SMR CODE	(3) NSN	(4) CAGEC	(5) PART NUMBER	(6) DESCRIPTION AND USABLE ON CODE (UOC)	(7) QTY
19	PAFZZ	2530-01-547-4956	1JUW8	BSE10918081	PARTS KIT,BRAKE SHO INCLUDES 4 SHOES FOR TWO WHEELS UOC: 257,646	1
20	PAFZZ	5340-00-359-1046	83299	016128600	CLIP,SPRING TENSION UOC: 257,646	6
21	PAFZZ	5310-00-335-4735	18876	8017164	WASHER,GUIDE BRAKE UOC: 257,646	4
22	XDFZZ		19207	10911075	PLATE,BACKING,BRAK LEFT UOC: 257,646	1
22	XDFZZ		19207	10911074	PLATE,BACKING,BRAKE RIGHT UOC: 257,646	1
23	PAFZZ	5306-00-042-5335	24617	425335	BOLT UOC: 257,646	8
24	PAFZZ	5340-00-205-5246	24617	426711	BUTTON,PLUG UOC: 257,646	2
25	PAFZZ	5310-00-732-0559	96906	MS51968-8	NUT,PLAIN,HEXAGON UOC: 257,646	2
26	PAFZZ	5310-00-595-7237	80205	MS35333-42	WASHER,LOCK UOC: 257,646	2
27	PAFZZ	2530-00-179-7119	19207	10911050	BLOCK,GUIDE,BRAKE S UOC: 257,646	2
28	PAFZZ	5360-00-852-9790	19207	10911066	SPRING,HELICAL,EXTE UOC: 257,646	2
29	PAFZZ	5310-00-368-4954	19207	7411019	WASHER,FLAT UOC: 257,646	4
30	PBFZZ	2530-01-254-6538	19207	10911062	LI NK,ANCHOR/BRAKE R. H. UOC: 257,646	1
30	PBFZZ	3040-00-227-6091	63477	LH-FC-11393-A	LEVER PIN ASSEMBLY L. H. UOC: 257,646	1
31	PAFZZ	5306-00-884-4819	63477	F11395B	BOLT,ECCENTRIC HEAD UOC: 257,646	2
32	PAFZZ	5340-00-312-1148	19207	10911113	CLIP,RETAINING UOC: 257,646	2
33	PBFZZ	2530-01-227-6262	19207	10911059	LINK,ANCHOR,BRAKE S L. H. UOC: 257,646	1
33	PBFZZ	2530-01-254-6539	19207	10911060	LINK,ANCHOR,BRAKE S R. H. UOC: 257,646	1

END OF FIGURE

FIELD MAINTENANCE
WHEEL CYLINDER

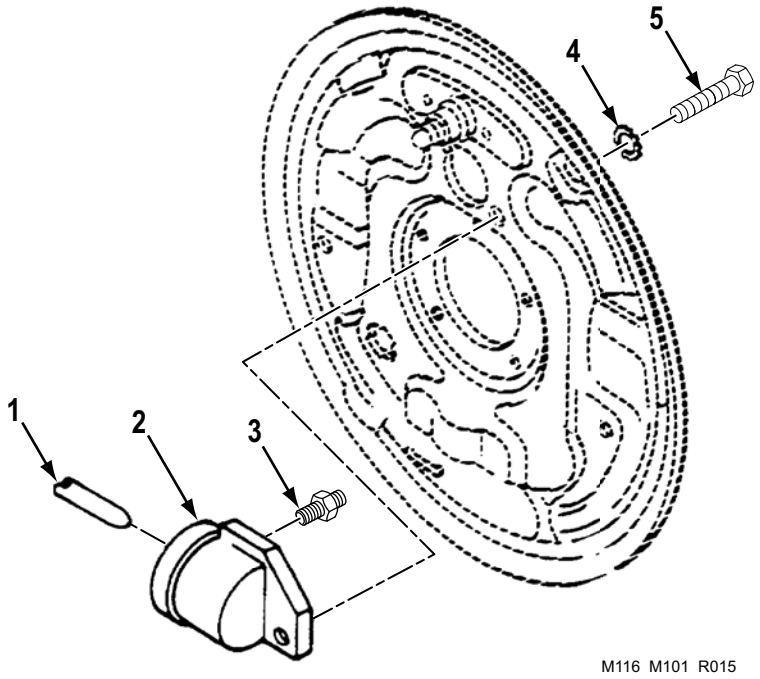

Figure 9. Wheel Cylinder.

(1) ITEM NO.	(2) SMR CODE	(3) NSN	(4) CAGEC	(5) PART NUMBER	(6) DESCRIPTION AND USABLE ON CODE (UOC)	(7) QTY
					GROUP 1204 HYDRAULIC BRAKE SYSTEM	
					FIG. 9. WHEEL CYLINDER.	
1	PAFZZ	2530-00-585-6079	19207	11686277	LINK,WHEEL CYLINDER UOC: CT1,TC1,258,263	1
2	PAFZZ	2530-00-161-7575	19207	11686267-2	CYLINDER ASSEMBLY,H RIGHT UOC: CT1,TC1,258,263	1
2	PAFZZ	2530-00-161-7576	19207	11686267-1	CYLINDER ASSEMBLY,H LEFT UOC: CT1,TC1,258,263	1
3	PAFZZ	2530-01-160-0850	19207	11686293	BLEEDER VALVE,HYDR UOC: CT1,TC1,258,263	1
4	PAFZZ	5310-00-514-6674	96906	MS35335-34	WASHER,LOCK UOC: CT1,TC1,258,263	1
5	PAFZZ	5306-00-226-4822	80204	B1821BH031C050N	BOLT,MACHINE UOC: CT1,TC1,258,263	2

END OF FIGURE

FIELD MAINTENANCE
HYDRAULIC BRAKE ACTUATOR ASSEMBLY (SURGE)

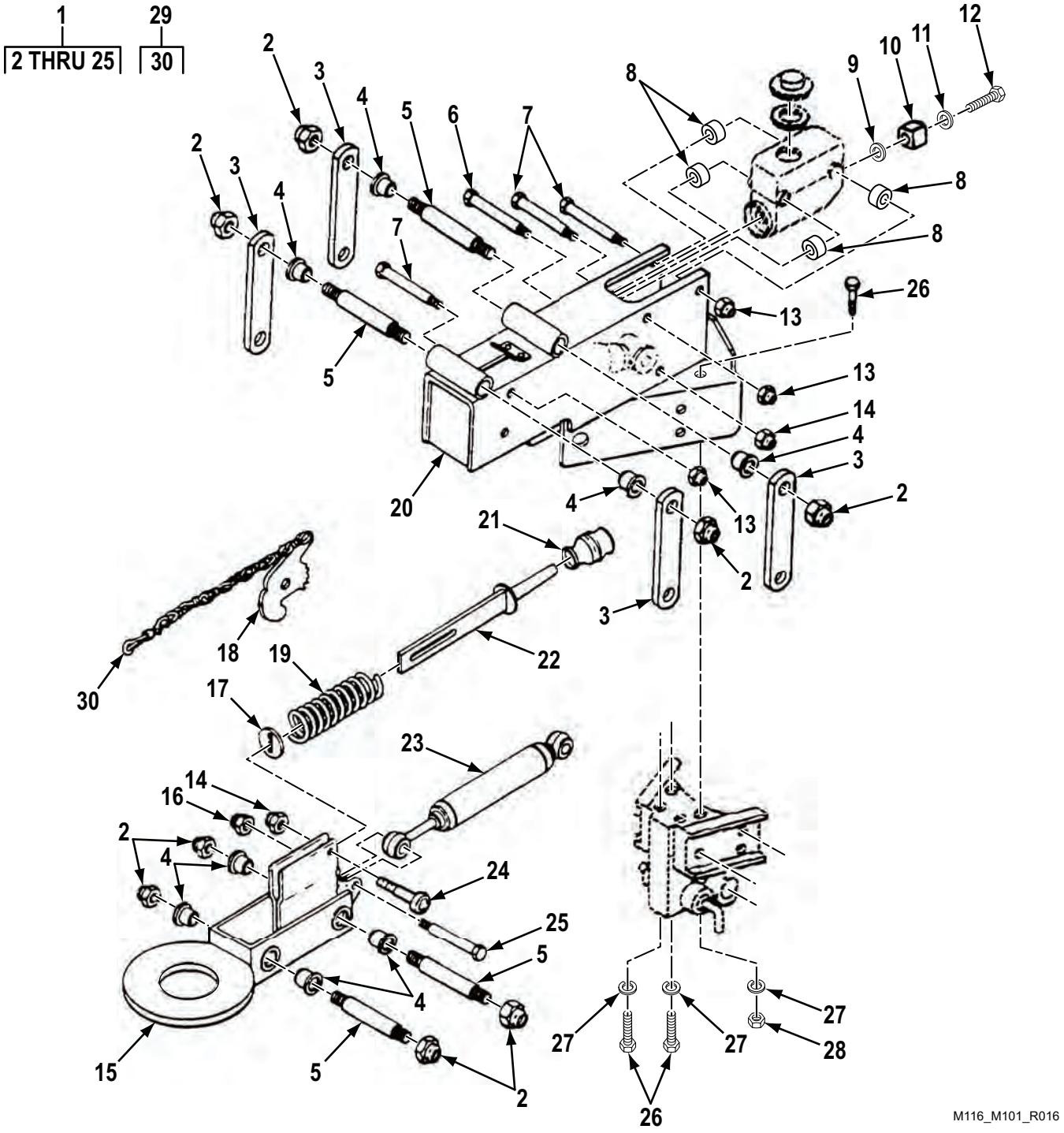

Figure 10. Hydraulic Brake Actuator Assembly, Surge. (Sheet 1 of 2)

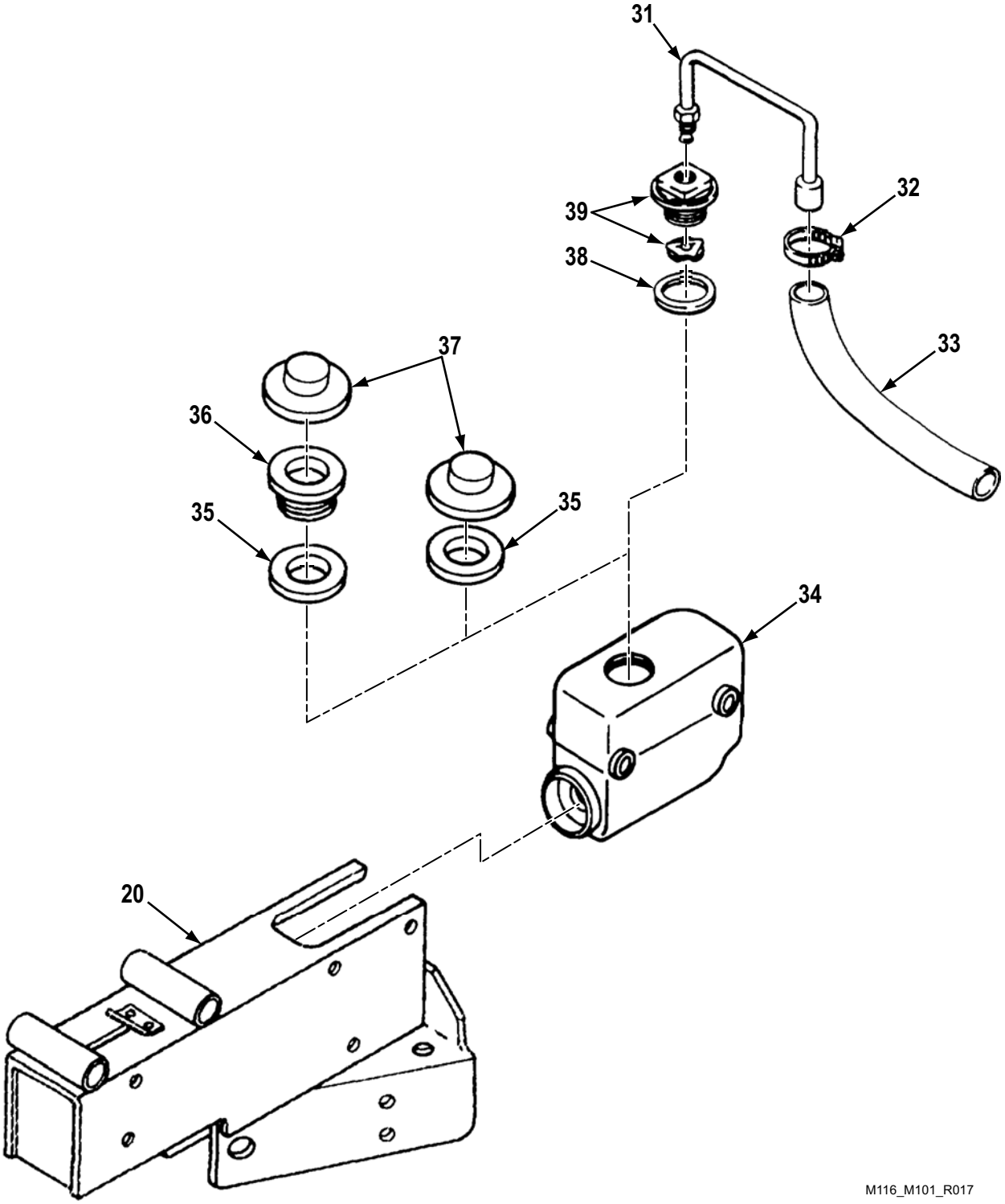

Figure 10. Hydraulic Brake Actuator Assembly, Surge. (Sheet 2 of 2)

(1) ITEM NO.	(2) SMR CODE	(3) NSN	(4) CAGEC	(5) PART NUMBER	(6) DESCRIPTION AND USABLE ON CODE (UOC)	(7) QTY
					GROUP 1204 HYDRAULIC BRAKE SYSTEM	
					FIG. 10. HYDRAULIC BRAKE ACTUATOR ASSEMBLY, SURGE.	
1	PAFFF	2530-01-348-2989	19207	11675013	ACTUATOR ASSEMBLY,H UOC: CT1,TC1,258,263	1
2	PAFZZ	5310-00-877-5795	80205	MS21044-N8	. NUT,SELF-LOCKING,HE UOC: CT1,TC1,258,263	8
3	PAFZZ	2540-01-051-6355	51557	1808-1	. LINK,CHAIN UOC: CT1,TC1,258,263	4
4	PAFZZ	3120-01-052-1151	93072	1745	. BEARING,SLEEVE UOC: CT1,TC1,258,263	8
5	PAFZZ	2540-01-051-6354	2X264	1829	. SHAFT,CHAIN UOC: CT1,TC1,258,263	4
6	PAFZZ	5305-00-710-4205	80205	MS90726-99	. SCREW,CAP,HEXAGON H UOC: CT1,TC1,258,263	1
7	PAFZZ	5305-00-709-8423	80204	B1821BH044F350N	. SCREW,CAP,HEXAGON H UOC: CT1,TC1,258,263	3
8	PAFZZ	5365-01-053-6898	19207	12356021	. SPACER,SLEEVE UOC: 258,263	4
9	PAFZZ	5310-00-275-6635	94988	FC602	. WASHER,FLAT UOC: CT1,TC1,258,263	1
10	PFFZZ	5340-01-570-9063	19207	12362746	. CONNECTOR UOC: CT1,TC1,258,263	1
11	PAFZZ	5310-00-209-1761	19207	5160323	. WASHER,FLAT UOC: CT1,TC1,258,263	1
12	PFFZZ	4730-01-053-8468	19207	8762000	. BOLT,FLUID PASSAGE UOC: CT1,TC1,258,263	1
13	PAFZZ	5310-00-959-1488	81349	M45913/2-6FG5C	. NUT,SELF-LOCKING,HE UOC: CT1,TC1,258,263	3
14	PAFZZ	5310-00-057-7080	81349	M45913/1-7FG5C	. NUT,SELF-LOCKING,HE UOC: CT1,TC1,258,263	2
15	PAFZZ	2540-01-060-7031	19207	12356009	. COUPLER,DRAWBAR,RIN UOC: CT1,TC1,258,263	1
16	PAFZZ	5310-00-074-2328	80205	MS21083-C7	. NUT,SELF-LOCKING,HE UOC: CT1,TC1,258,263	1
17	PAFZZ	5310-01-050-8832	19207	12356017	. WASHER,PUSH ROD UOC: CT1,TC1,258,263	1
18	PAFZZ	2530-01-050-7698	93072	1804	. LEVER BREAKAWAY UOC: CT1,TC1,258,263	1
19	PAFZZ	5360-01-054-2281	93072	1828	. SPRING UOC: CT1,TC1,258,263	1
20	PAFZZ	9520-01-139-9677	19207	12314088	. CHANNEL,STRUCTURAL UOC: CT1,TC1,258,263	1

(1) ITEM NO.	(2) SMR CODE	(3) NSN	(4) CAGEC	(5) PART NUMBER	(6) DESCRIPTION AND USABLE ON CODE (UOC)	(7) QTY
21	PAFZZ	2530-00-715-7260	63477	F12300	. BOOT,VEHICULAR COMP UOC: CT1,TC1,258,263	1
22	PAFZZ	2530-01-167-1999	93072	10703	. PUSH ROD,HYDRAULIC UOC: CT1,TC1,258,263	1
23	PAFZZ	2510-01-050-7136	19207	12356022	. SHOCK ABSORBER,DIRE UOC: CT1,TC1,258,263	1
24	PAFZZ	5305-00-949-6184	80205	MS51975-2	. SCREW,SHOULDER UOC: CT1,TC1,258,263	1
25	PAFZZ	5305-00-709-8542	80204	B1821BH044F200N	. SCREW,CAP,HEXAGON H UOC: CT1,TC1,258,263	1
26	PAFZZ	5305-00-719-5209	80204	B1821BH050F113N	SCREW,CAP,HEXAGON H 3/4 HEX, 1/2-UNF 20, 2A R/H, 1 1/8 INCHES LONG UOC: CT1,TC1,258,263	2
27	PAFZZ	5310-00-003-4094	96906	MS35338-48	WASHER,LOCK UOC: CT1,TC1,258,263	1
28	PAFZZ	5310-00-732-0560	96906	MS51968-14	NUT,PLAIN,HEXAGON UOC: CT1,TC1,258,263	1
29	PAFFF	4010-01-158-6795	19207	12296386	CHAIN ASSEMBLY,SING UOC: CT1,TC1,258,263	1
30	PAFZZ	5340-01-385-9852	19207	12331722	. SNAP HOOK UOC: CT1,TC1,258,263	1
31	PFFZZ	4710-00-511-1692	19207	8365426	TUBE ASSEMBLY,METAL UOC: CT1,TC1	1
32	PAFZZ	4730-00-908-3194	12387	AEA9630A	CLAMP,HOSE UOC: CT1,TC1	1
33	PCFZZ	4720-00-489-5350	81343	J20R1 CLASS C	HOSE,NONMETALLIC UOC: CT1,TC1	1
34	PAFZZ	2530-01-050-8929	19207	12356019	CYLINDER ASSEMBLY,H UOC: CT1,TC1,258,263	1
35	PAFZZ	5330-00-291-6658	11083	9B1545	GASKET UOC: CT1,TC1,258,263	1
36	PAFZZ	5340-01-418-9889	02686	126945	CAP,FILLER OPENING OPENING UOC: 258,263	1
37	PAFZZ	2590-01-388-2416	19207	12331725-2	CAP,FILLER OPENING UOC: CT1,TC1,258,263	1
38	PAFZZ	5330-00-737-3354	19207	7373354	GASKET UOC: CT1,TC1	1
39	PAFZZ	4730-00-773-2163	63477	7979691	CAP,FILLER OPENING UOC: CT1,TC1	1

END OF FIGURE

FIELD MAINTENANCE
HYDRAULIC BRAKE LINES

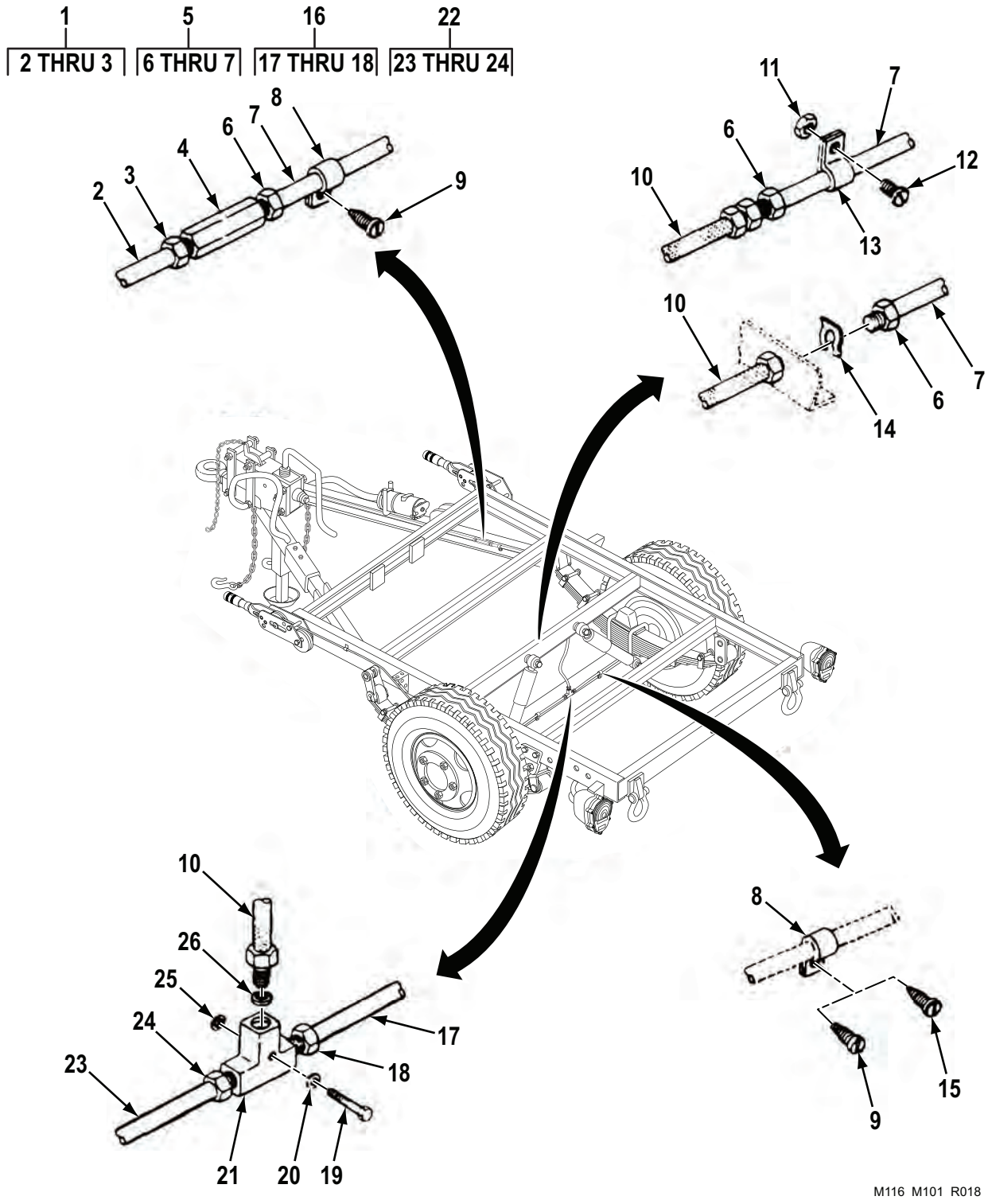

Figure 11. Hydraulic Brake Lines.

(1) ITEM NO.	(2) SMR CODE	(3) NSN	(4) CAGEC	(5) PART NUMBER	(6) DESCRIPTION AND USABLE ON CODE (UOC)	(7) QTY
					GROUP 1204 HYDRAULIC BRAKE SYSTEM	
					FIG. 11. HYDRAULIC BRAKE LINES.	
1	AFFFF		19207	12354224	TUBE ASSEMBLY FRONT UOC: CT1,TC1	1
1	AFFFF		19207	11686100	TUBE ASSEMBLY FRONT UOC: 258,263	1
2	MFFZZ		19207	11686100-56.5	. TUBE,BENT METALLIC FRONT, MAKE FROM TUBE,METALLIC,BENT, P/N 10943231, 56 1/2 INCHES LONG UOC: 258,263	1
2	MFFZZ		19207	12354224-1	. TUBE,BENT METALLIC FRONT, MAKE FROM TUBE,METALLIC, P/N M3520-B80B01G, 61 INCHES LONG UOC: CT1,TC1	1
3	PAFZZ	5310-00-134-4141	21450	110357	. NUT,SPECIAL UOC: CT1,TC1,258,263	2
4	PAFZZ	4730-00-278-8853	21450	143449	COUPLING,TUBE UOC: CT1,TC1,258,263	1
5	AFFFF		19207	11686102	TUBE ASSEMBLY REAR UOC: 258,263	1
5	AFFFF		19207	12354225	TUBE ASSEMBLY REAR UOC: CT1,TC1	1
6	PAFZZ	5310-00-134-4141	21450	110357	. NUT,SPECIAL UOC: CT1,TC1,258,263	2
7	MFFZZ		19207	12354225-1	. TUBE,BENT, METALLIC REAR, MAKE FROM TUBE,BENT,METALLIC, P/N 3520-B80B01G, 50 INCHES LONG UOC: CT1,TC1	1
7	MFFZZ		19207	11686102-1X	. TUBE,BENT METALLIC REAR, MAKE FROM TUBE,BENT,METALLIC, P/N M3520-B80B01G, 50 INCHES,LONG UOC: 258,263	1
8	PAFZZ	5340-00-778-2738	96906	MS21333-2	CLAMP,LOOP UOC: CT1,TC1,258,263	13
9	PAFZZ	5305-00-855-0958	80205	MS24629-45	SCREW,TAPPING UOC: CT1,TC1,258,263	13
10	PAFZZ	4720-01-306-6294	19207	12354199	HOSE ASSEMBLY,NONME UOC: CT1,TC1,258,263	1
11	PAFZZ	5310-00-143-6102	81349	M45913/1-4FS3	NUT,SELF-LOCKING,HE UOC: 258,263	1
12	PAFZZ	5305-00-267-8953	80204	B1821BH025F063N	SCREW,CAP,HEXAGON H UOC: 258,263	1
13	PAFZZ	5340-00-993-6207	96906	MS21333-99	CLAMP,LOOP UOC: 258,263	1

(1) ITEM NO.	(2) SMR CODE	(3) NSN	(4) CAGEC	(5) PART NUMBER	(6) DESCRIPTION AND USABLE ON CODE (UOC)	(7) QTY
14	PAFZZ	5325-00-864-2993	19207	7735289	RING,RETAINING UOC: CT1,TC1	1
15	PAFZZ	5305-00-855-0964	80205	MS24629-48	SCREW,TAPPING UOC: CT1,TC1	2
16	AFFFF		19207	12362795	TUBE ASSEMBLY RIGHT,MAKE FROM TUBE,BENT,METALLIC, P/N M3520-B80B01G,41 INCH LONG UOC: CT1,TC1	1
16	AFFFF		19207	11686103-2	TUBE ASSEMBLY RIGHT UOC: 258,263	1
17	MFFZZ		19207	11686103-2-1X	. TUBE,BENT,METALLIC RIGHT, MAKE FROM TUBE,BENT,METALLIC, P/N B3520-B80B01G, 32 INCHES LONG UOC: 258,263	1
17	MFFZZ		19207	12362795-1	. TUBE,BENT,METALLIC RIGHT, MAKE FROM TUBE,BENT,METALLIC, P/N M3520-B80A00G, 41 INCHES LONG UOC: CT1,TC1	1
18	PAFZZ	5310-00-134-4141	21450	110357	. NUT,SPECIAL UOC: CT1,TC1,258,263	2
19	PAFZZ	5305-00-225-3843	80204	B1821BH025C100N	SCREW,CAP,HEXAGON H UOC: CT1,TC1,258,263	1
20	PAFZZ	5310-00-809-4058	96906	MS27183-10	WASHER,FLAT UOC: CT1,TC1,258,263	1
21	PAFZZ	4730-01-043-3055	19207	11625496	TEE,TUBE UOC: CT1,TC1,258,263	1
22	AFFFF		19207	12362796	TUBE ASSEMBLY LEFT UOC: CT1,TC1	1
22	AFFFF		19207	11686103-1	TUBE ASSEMBLY LEFT UOC: 258,263	1
23	MFFZZ		19207	11686103-1-1X	. TUBE,BENT,METALLIC LEFT, MAKE FROM TUBE,BENT,METALLIC, P/N B3520-B80B01G, 40 INCHES LONG UOC: 258,263	1
23	MFFZZ		19207	12362796-1	. TUBE,BENT,METALLIC LEFT, MAKE FROM TUBE,BENT,METALLIC, P/N B3520-B80B01G, 40 INCHES LONG UOC: CT1,TC1	1
24	PAFZZ	5310-00-134-4141	21450	110357	. NUT,SPECIAL UOC: CT1,TC1,258,263	2
25	PAFZZ	5310-00-582-5965	80205	MS35338-44	WASHER,LOCK UOC: CT1,TC1,258,263	1
26	PAFZZ	5330-01-044-1941	19207	11625497	GASKET UOC: CT1,TC1,258,263	1

END OF FIGURE

FIELD MAINTENANCE
WHEEL AND HUB ASSEMBLY

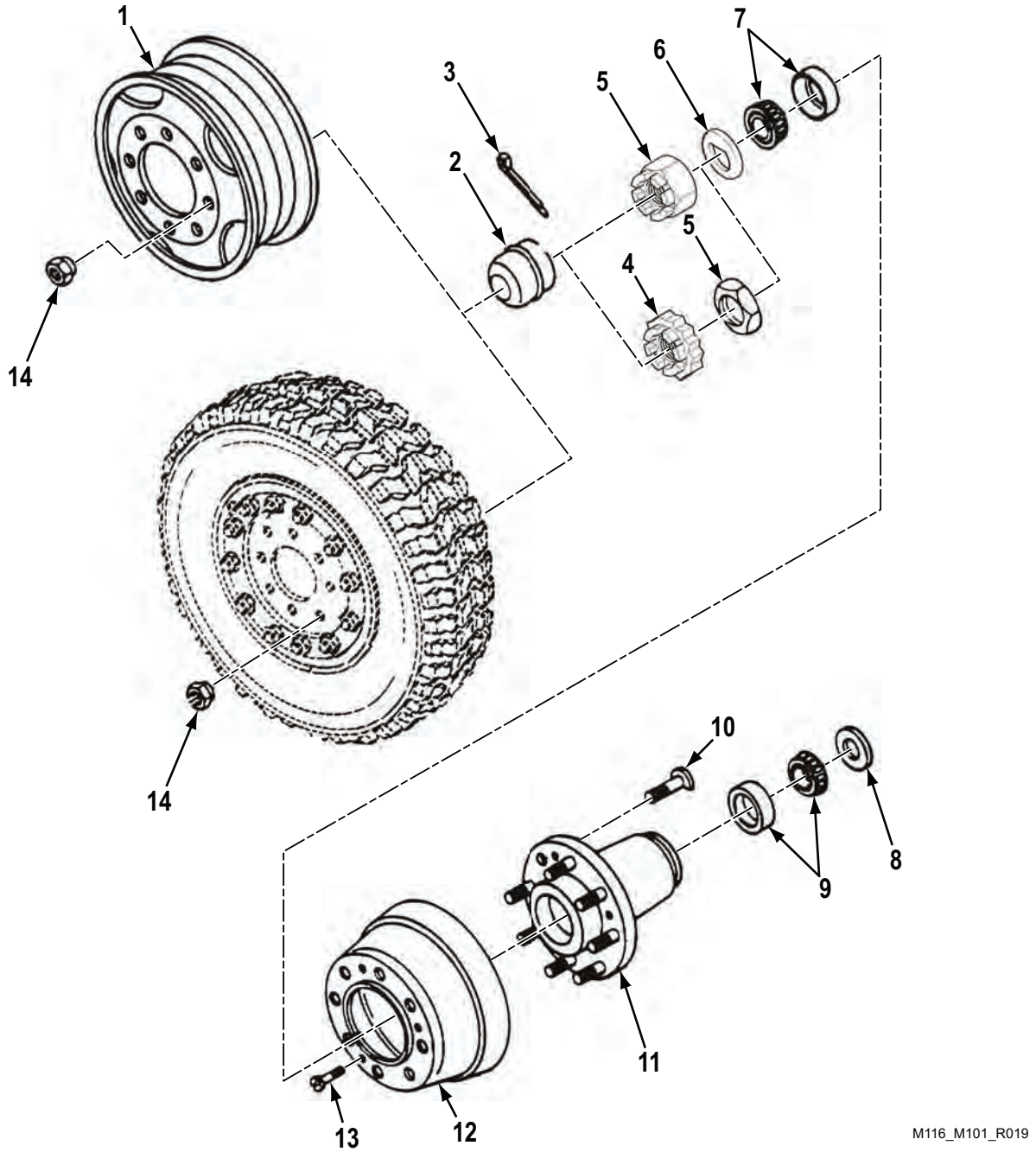

Figure 12. Wheel and Hub Assembly. (Sheet 1 of 2)

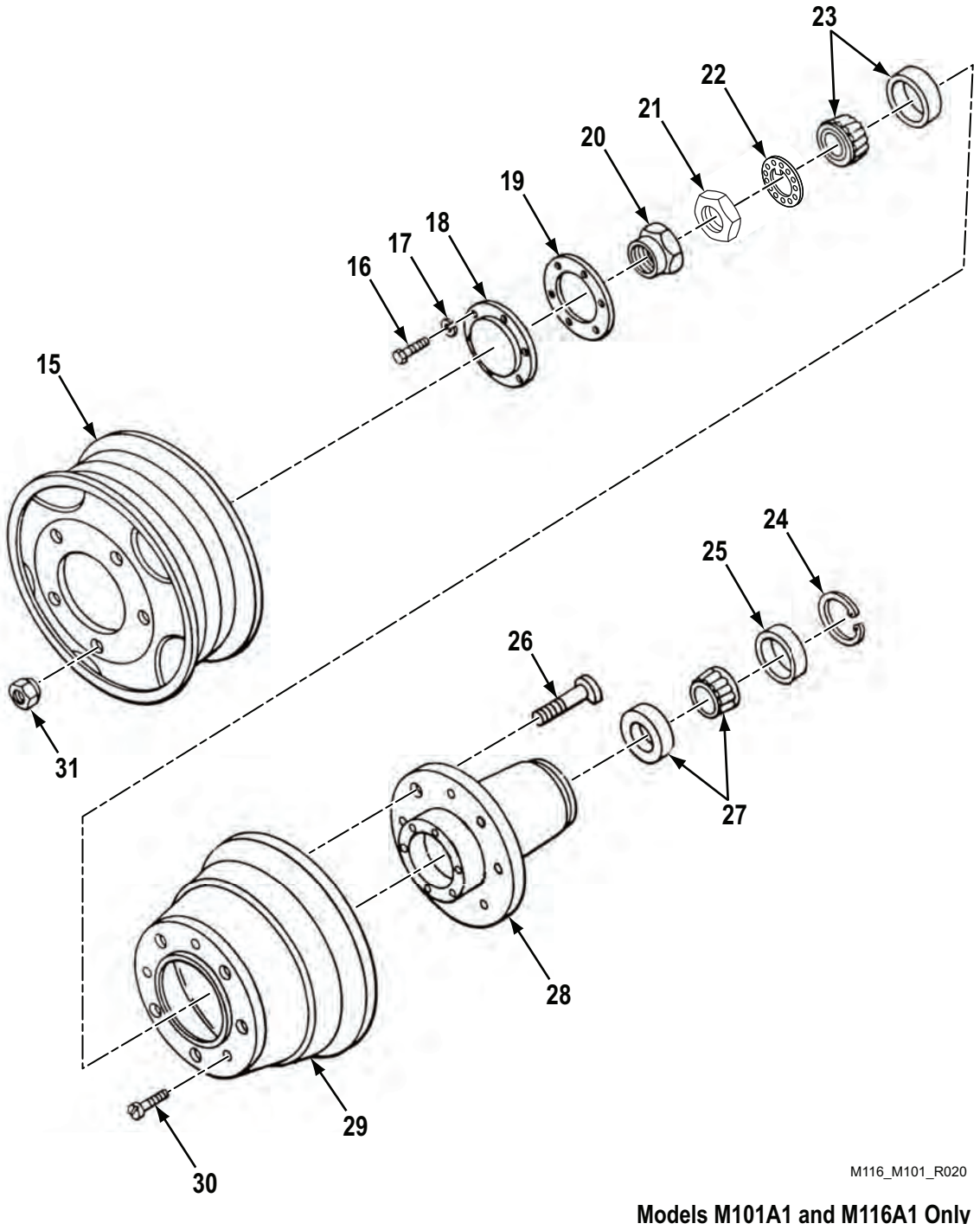

Figure 12. Wheel and Hub Assembly. (Sheet 2 of 2)

(1) ITEM NO.	(2) SMR CODE	(3) NSN	(4) CAGEC	(5) PART NUMBER	(6) DESCRIPTION AND USABLE ON CODE (UOC)	(7) QTY
					GROUP 1311 WHEEL ASSEMBLY	
					FIG. 12. WHEEL AND HUB ASSEMBLY.	
1	PAFZZ	2530-01-154-6952	1JUW8	SM14035374-1	WHEEL,PNEUMATIC TIR UOC: 258,263	1
2	PAFZZ	3040-01-149-5061	19207	12313048	CAP,GREASE UOC: CT1,TC1,258,263	1
3	PAFZZ	5315-00-013-7238	80205	MS24665-425	PIN,COTTER 1.75 INCHES LONG UOC: CT1,TC1,257,646	1
3	PAFZZ	5315-00-236-8368	96906	MS24665-436	PIN,COTTER 0.75 INCHES LONG UOC: 258,263	1
4	PAFZZ	5340-01-151-4202	19207	12313042	RETAINER,NUT AND BO UOC: CT1,TC1,258,263	2
5	PAFZZ	5310-01-498-0322	19207	12441093	NUT,PLAIN,CASTELLAT UOC: CT1,TC1	1
5	PAFZZ	5310-00-167-1313	80205	AN316-16R	NUT,PLAIN,HEXAGON	1
6	PAFZZ	5310-01-146-9635	19207	12313024	WASHER,FLAT UOC: CT1,TC1,258,263	1
7	PAFZZ	3110-01-165-4860	19207	12313045	BEARING,ROLLER,TAPE UOC: CT1,TC1,258,263	1
8	PCFZZ	5330-01-140-8231	19207	12313027	SEAL,PLAIN ENCASED UOC: CT1,TC1,258,263	1
9	PAFZZ	3110-00-100-5303	58536	AA59649-267	BEARING,ROLLER,TAPE UOC: CT1,TC1,258,263	1
10	PAFZZ	5306-01-237-6844	19207	12354223	BOLT,RIBBED SHOULDE UOC: CT1,TC1,258,263	8
11	PAFZZ	3040-01-139-9900	19207	12313010	HUB,BODY UOC: CT1,TC1,258,263	1
12	PAFZZ	2530-01-148-7074	19207	12313012	BRAKE DRUM UOC: CT1,TC1,258,263	1
13	PAFZZ	5305-00-958-5258	80205	MS35190-317	SCREW,MACHINE UOC: CT1,TC1,258,263	2
14	PAFZZ	5310-01-149-0868	19207	12313047	NUT,PLAIN,HEXAGON UOC: CT1,TC1,258,263	8
15	PAFZZ	2530-01-534-1110	1JUW8	BMS7388452-2	WHEEL,PNEUMATIC TIR UOC: 257	2
16	PAFZZ	5305-00-071-1788	80204	B1821BH044C125N	SCREW,CAP,HEXAGON H UOC: 257,646	12
17	PAFZZ	5310-00-209-0965	80205	MS35338-47	WASHER,LOCK UOC: 257,646	12
18	PAFZZ	5340-00-040-2367	19207	7339402	COVER,ACCESS UOC: 257,646	2
19	PAFZZ	5330-00-629-4961	19207	7339403	GASKET UOC: 257,646	2
20	PAFZZ	5310-00-734-8982	19207	7348982	NUT,SLEEVE UOC: 257,646	2

(1) ITEM NO.	(2) SMR CODE	(3) NSN	(4) CAGEC	(5) PART NUMBER	(6) DESCRIPTION AND USABLE ON CODE (UOC)	(7) QTY
21	PAFZZ	5310-00-734-9223	19207	7349223	WASHER,KEY UOC: 257,646	2
22	PAFZZ	5310-00-741-4702	19207	7414702	NUT,PLAIN,OCTAGON UOC: 257,646	2
23	PAFZZ	3110-00-100-4484	58536	AA59649-304	BEARING,ROLLER,TAPE CONE AND CUP OUTER UOC: 257,646	2
24	PAFZZ	5325-00-260-4882	96906	MS16625-1387	RING,RETAINING OIL SEAL UOC: 257,646	2
25	PAFZZ	5330-00-154-8353	14153	00044	SEAL,PLAIN ENCASED HUB BEARING UOC: 257,646	2
26	PAFZZ	5306-01-009-7117	96906	MS51949-1	BOLT,SHOULDER LEFT UOC: 257,646	5
26	PAFZZ	5306-01-130-4240	96906	MS51949-2	BOLT,SHOULDER RIGHT UOC: 257,646	5
27	PAFZZ	3110-00-100-5329	58536	AA59649-410	BEARING,ROLLER,TAPE UOC: 257,646	1
28	PBFZZ	3040-01-145-0382	19207	5599887	HUB,BODY UOC: 257,646	1
29	PAFZZ	2530-00-786-0195	19207	12354239	BRAKE DRUM UOC: 257,646	1
30	PAFZZ	5305-00-958-5259	80205	MS35190-318	SCREW,MACHINE UOC: 257,646	3
31	PAFZZ	5310-01-045-3709	58536	A52427-R-0.750	NUT,PLAIN,SINGLE BA RIGHT UOC: 257,646	5
31	PAFZZ	5310-00-518-5566	58536	A52427-L-0.750	NUT,PLAIN,SINGLE BA LEFT UOC: 257,646	5

END OF FIGURE

FIELD MAINTENANCE
WHEEL AND RUNFLAT ASSEMBLY (M116A3 AND M101A3)

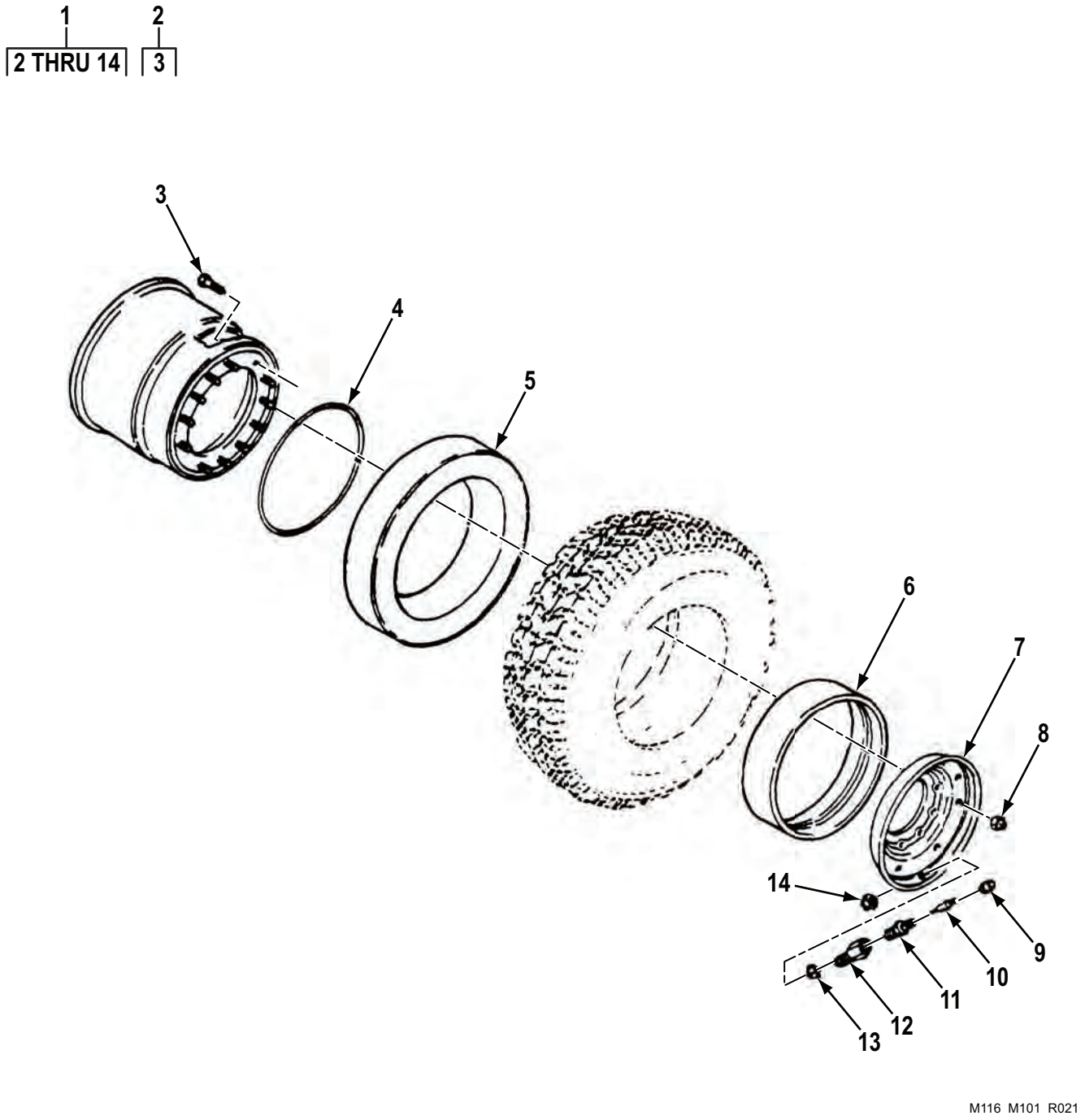

Figure 13. Wheel and Runflat Assembly (M101A3 and M116A3).

(1) ITEM NO.	(2) SMR CODE	(3) NSN	(4) CAGEC	(5) PART NUMBER	(6) DESCRIPTION AND USABLE ON CODE (UOC)	(7) QTY
					GROUP 1311 WHEEL ASSEMBLY	
					FIG. 13. WHEEL AND RUNFLAT ASSEMBLY (M101A3 AND M116A3).	
1	AFFFF		19207	12342641	WHEEL AND RUN FLAT ASSEMBLY RADIAL TIRE. UOC: CT1,TC1	1
2	PAFFF	2530-01-336-5740	19207	12342642	. RIM,WHEEL,PNEUMATIC UOC: CT1,TC1	1
3	PAFZZ	5306-01-336-7175	19207	12342758	. . BOLT,RIBBED NECK UOC: CT1,TC1	12
4	PCFZZ	5331-01-335-8878	19207	12342633	. O-RING UOC: CT1,TC1	1
5	PCFZZ	2640-01-334-9453	19207	12342638	. RUNFLAT,INSERT UOC: CT1,TC1	1
6	PAFZZ	2530-01-338-2730	19207	12342639	. BEADLOCK,TIRE RIM UOC: CT1,TC1	1
7	PAFZZ	2530-01-336-3127	19207	12342640	. RIM,WHEEL,PNEUMATIC UOC: CT1,TC1	1
8	PAFZZ	5310-01-198-7585	19207	12339501	. NUT,SELF-LOCKING,HE UOC: CT1,TC1	12
9	PAFZZ	2640-01-098-2029	39BV2	627-100-GOVT	. CAP,PNEUMATIC VALVE UOC: CT1,TC1	1
10	PAFZZ	2640-00-050-1229	39BV2	100-AA	. VALVE CORE UOC: CT1,TC1	1
11	PAFZZ	2640-01-335-4583	19207	12342634	. VALVE,PNEUMATIC TIR UOC: CT1,TC1	1
12	PAFZZ	4730-01-346-1063	19207	12342793	. ADAPTER,STRAIGHT,PI UOC: CT1,TC1	1
13	PCFZZ	5331-01-346-3806	19207	12342794	. O-RING UOC: CT1,TC1	1
14	PAFZZ	5310-00-449-2376	80205	MS21245-8	. NUT,SELF-LOCKING,HE UOC: CT1,TC1	1

END OF FIGURE

FIELD MAINTENANCE
TIRE AND VALVE

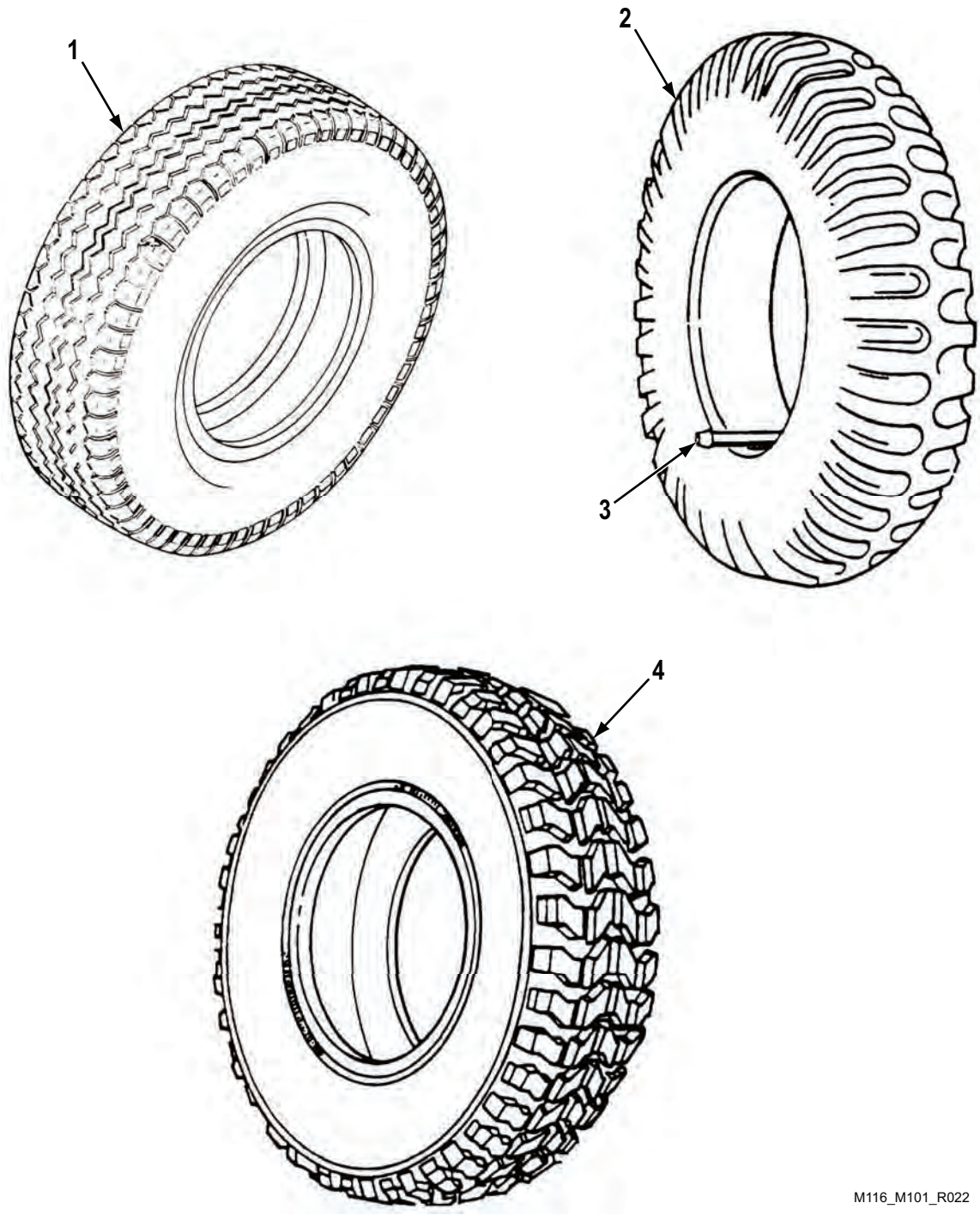

Figure 14. Tire and Valve. (Sheet 1 of 2)

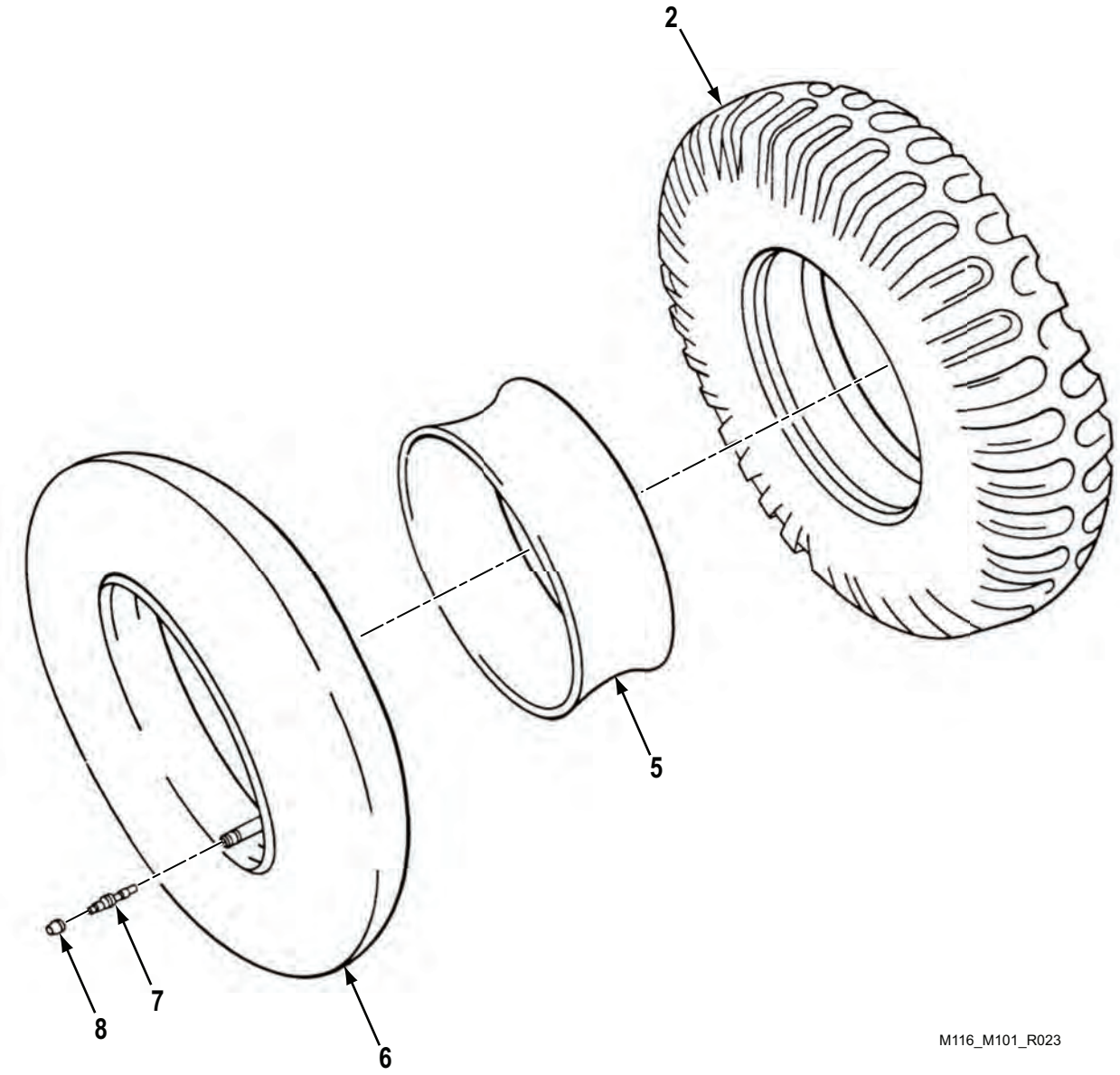

Models M101A1 and M116A1 Onlv

Figure 14. Tire and Valve. (Sheet 2 of 2)

(1) ITEM NO.	(2) SMR CODE	(3) NSN	(4) CAGEC	(5) PART NUMBER	(6) DESCRIPTION AND USABLE ON CODE (UOC)	(7) QTY
					GROUP 1313 TIRES, TUBES, TIRE CHAINS	
					FIG. 14. TIRE AND VALVE.	
1	PCFZZ	2610-01-148-1635	19207	12504904	TIRE,PNEUMATIC,VEHI RADIAL 235/85R16 UOC: 257,258,263	1
2	PCFFF	2610-00-540-4719	66798	LT286	TIRE ,PNELMATIC UOC: 257,646	2
3	PAFZZ	2640-00-555-2829	58536	A-A-52611-2-2-TR501	VALVE,PNEUMATIC TIR OLD UOC: 258,263	1
3	PAFZZ	2640-01-302-1388	58536	A-A-52611-2-1-TR600HP	VALVE,PNEUMATIC TIR NEW, 0.453 HOLE UOC: 258,263	1
4	PCFFH	2610-01-333-7632	04NP3	743-123-154	TIRE,PNEUMATIC,VEHI UOC: CT1,TC1	1
5	PCFZZ	2640-00-208-7541	9Y199	6167100.1	FLAP,INNER TUBE,PNE UOC: 257,646	2
6	PCFZZ	2610-00-051-9266	81348	ZZ-I-550	INNER TUBE UOC: 257,646	2
7	PAFZZ	2640-00-050-1229	39BV2	100-AA	VALVE CORE UOC: 257,646	2
8	PAFZZ	2640-00-060-3550	58536	A-A-52611-4-1-TR-VC-2	CAP,PNEUMATIC VALVE UOC: 257,646	2

END OF FIGURE

FIELD MAINTENANCE
CHASSIS FRAME ASSEMBLY

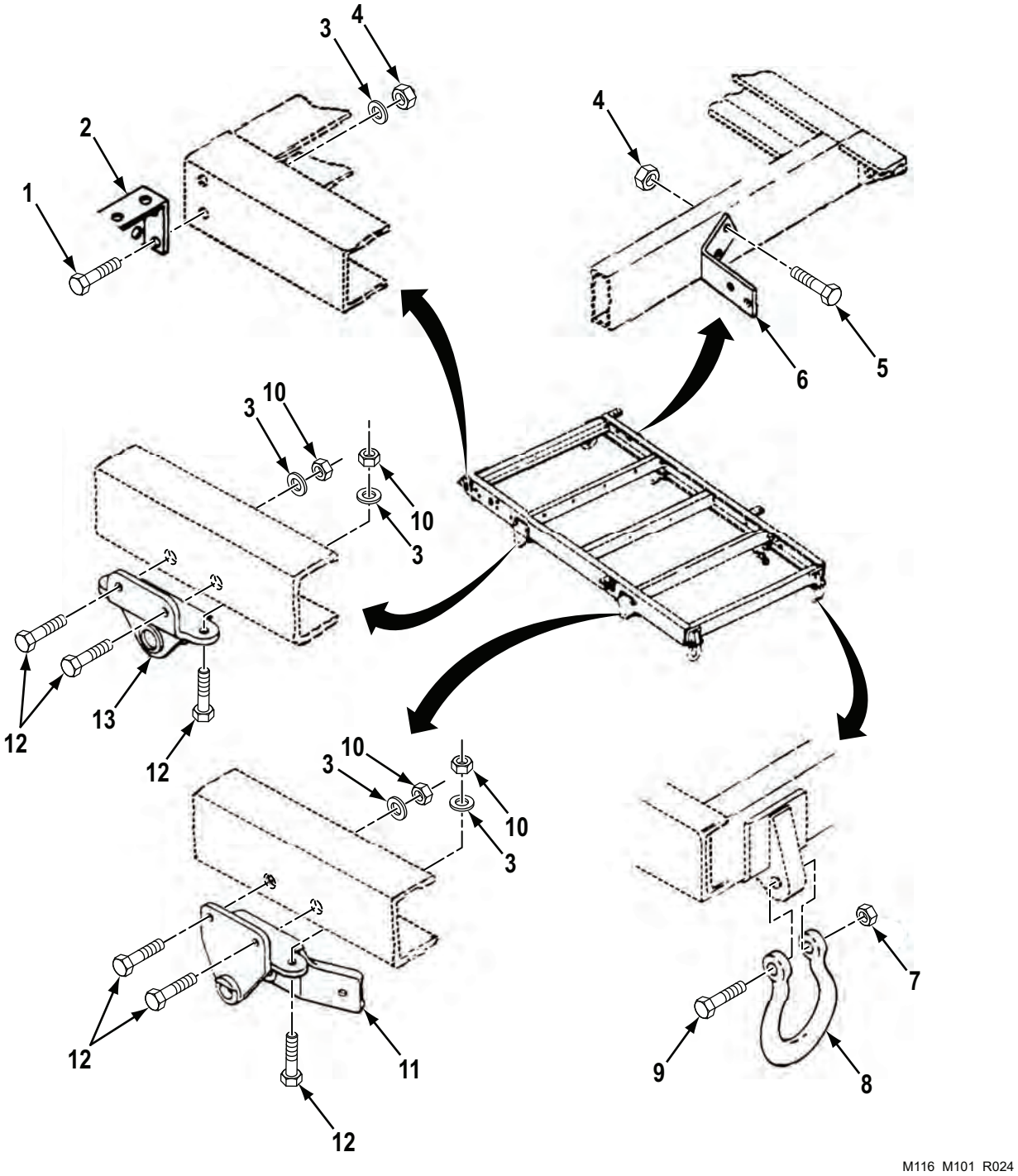

Figure 15. Chassis Frame Assembly. (Sheet 1 of 2)

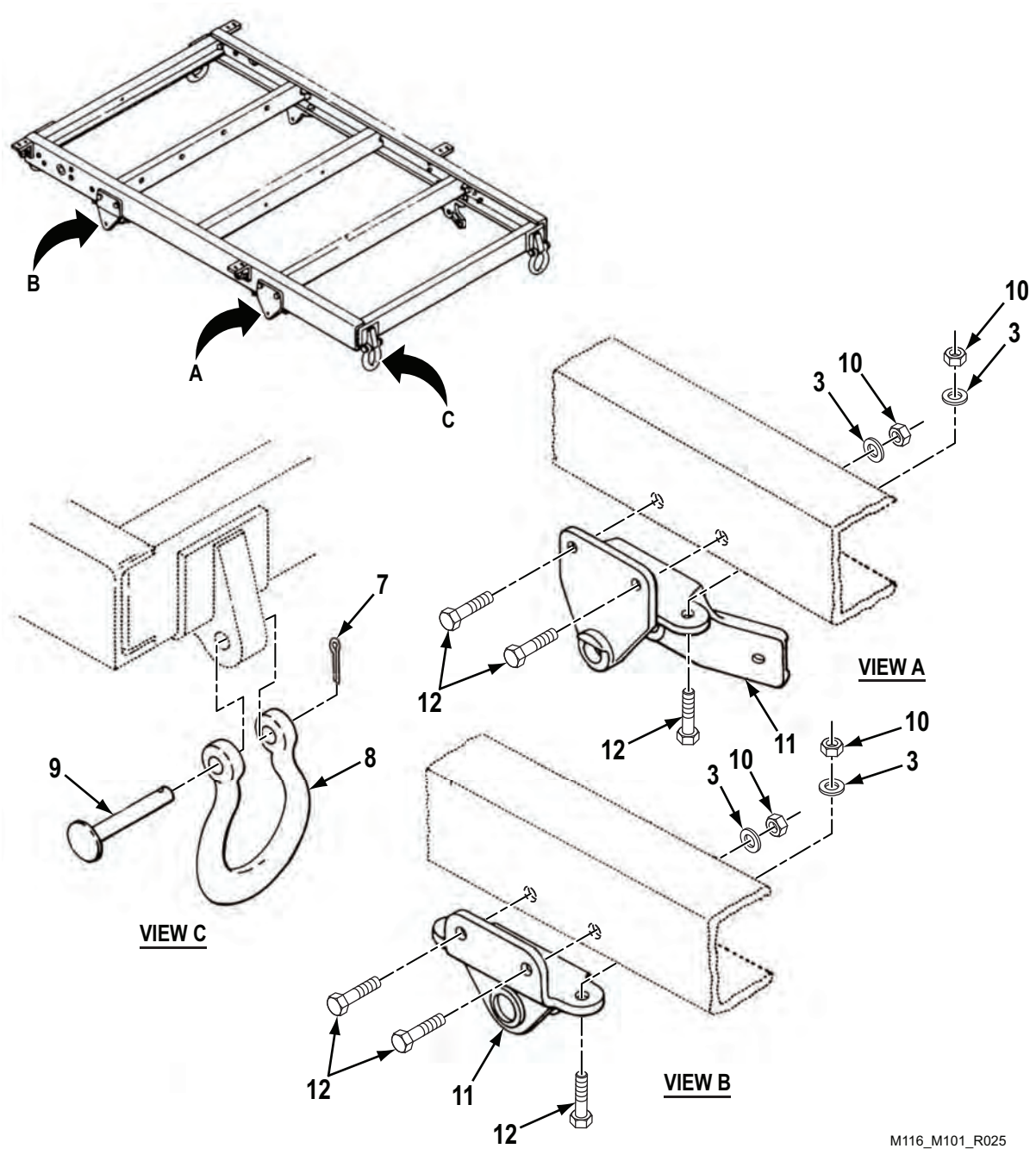

Models M101A1 and M116A1 Only

Figure 15. Chassis Frame Assembly. (Sheet 2 of 2)

(1) ITEM NO.	(2) SMR CODE	(3) NSN	(4) CAGEC	(5) PART NUMBER	(6) DESCRIPTION AND USABLE ON CODE (UOC)	(7) QTY
					GROUP 1501 FRAME ASSEMBLY	
					FIG. 15. CHASSIS FRAME ASSEMBLY.	
1	PAFZZ	5305-00-068-0511	80204	B1821BH038C125N	SCREW,CAP,HEXAGON H UOC: CT1,TC1,258,263	2
2	PAFZZ	5340-00-733-9365	19207	7339365	BRACKET,ANGLE UOC: CT1,TC1,258,263	1
3	PAFZZ	5310-00-877-5972	19200	10910174-3	WASHER,FLAT UOC: CT1,TC1,258,263	10
3	PAFZZ	5310-00-080-6004	96906	MS27183-14	WASHER,FLAT UOC: 257,646	16
4	PAFZZ	5310-00-087-4652	81349	M45913/1-6CG5C	NUT,SELF-LOCKING,HE UOC: CT1,TC1,258,263	4
5	PAFZZ	5305-01-140-9118	80204	B1821BH038C088N	SCREW,CAP,HEXAGON H UOC: CT1,TC1,258,263	2
6	PAFZZ	5340-00-040-2372	19207	7339489	BRACKET,ANGLE RIGHT UOC: CT1,TC1,258,263	1
6	PAFZZ	5340-00-733-9367	19207	7339367	BRACKET,ANGLE LEFT UOC: CT1,TC1,258,263	1
7	PAFZZ	5310-00-067-6356	81349	MS45913/2-12CG5C	NUT,SELF-LOCKING,HE UOC: CT1,TC1	1
7	PAFZZ	5315-00-012-0123	80205	MS24665-355	PIN,COTTER UOC: 257,646	4
8	PAFZZ	4030-01-371-9331	19207	12355838	SHACKLE UOC: CT1,TC1,258,263	1
8	PAFZZ	4030-01-044-6040	19207	7339368	SHACKLE UOC: 257,646	4
9	PAFZZ	5315-01-112-8102	19207	7339369	PIN,STRAIGHT,HEADED UOC: 257,646	4
9	PAFZZ	5305-00-947-4356	80204	B1821BH075C350N	SCREW,CAP,HEXAGON H UOC: CT1,TC1	4
10	PAFZZ	5310-00-483-8789	80205	MS17829-6F	NUT,SELF-LOCKING,HE UOC: CT1,TC1,257,646	16
11	PAFZZ	2510-00-733-9406	19207	7339406	HANGER,SPRING,VEHIC LEFT	1
11	PAFZZ	2510-00-705-8969	19207	7339405	BRACKET,MOUNTING RIGHT	1
12	PAFZZ	5305-00-269-3239	80204	B1821BH038F138N	SCREW,CAP,HEXAGON H UOC: CT1,TC1,258,263	8
12	PAFZZ	5305-00-269-3238	80204	B1821BH038F125N	SCREW,CAP,HEXAGON H UOC: 257,646	16
13	PAFZZ	2510-00-733-9407	19207	7339407	SHACKLE,LEAF SPRING REAR	2

END OF FIGURE

FIELD MAINTENANCE
DRAWBAR ASSEMBLY AND SAFETY CHAINS

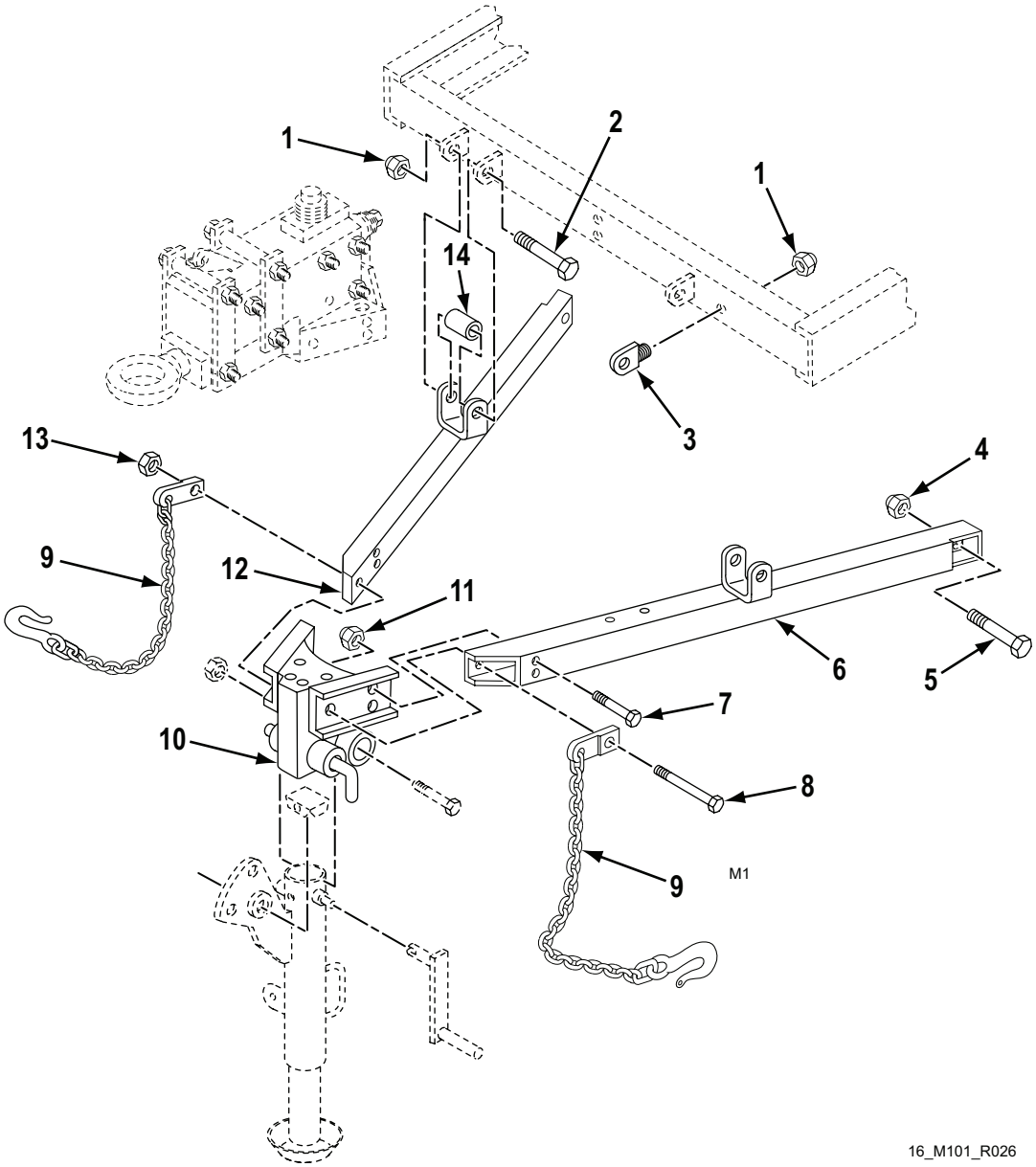

Figure 16. Drawbar Assembly and Safety Chains. (Sheet 1 of 2)

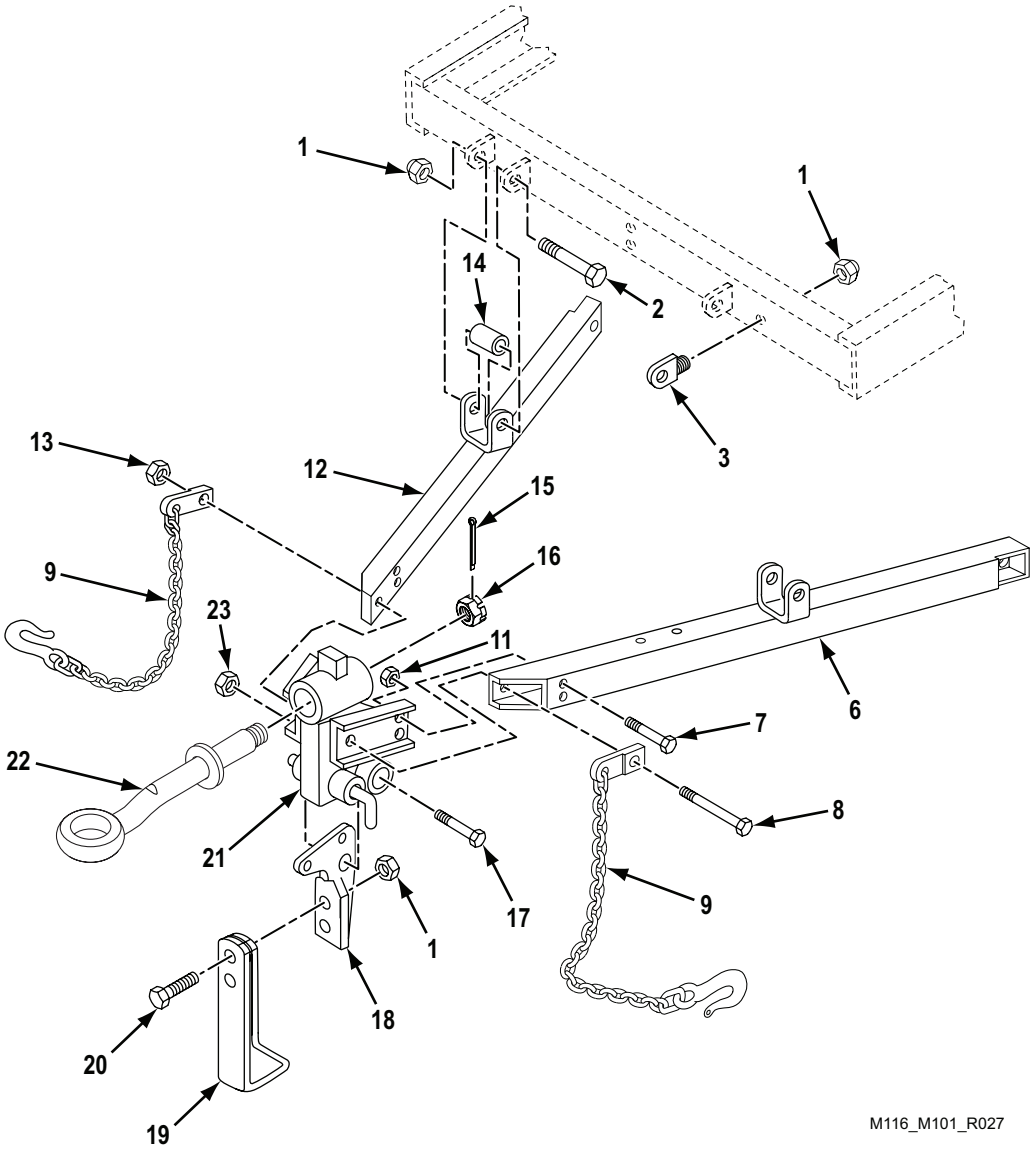

Figure 16. Drawbar Assembly and Safety Chains. (Sheet 2 of 2)

(1) ITEM NO.	(2) SMR CODE	(3) NSN	(4) CAGEC	(5) PART NUMBER	(6) DESCRIPTION AND USABLE ON CODE (UOC)	(7) QTY
					GROUP 1503 PINTLES AND TOWING ATTACHMENTS	
					FIG. 16. DRAWBAR ASSEMBLY AND SAFETY CHAINS.	
1	PAFZZ	5310-00-877-5795	80205	MS21044-N8	NUT,SELF-LOCKING,HE	8
2	PAFZZ	5305-00-945-6412	80204	B1821BH050F500N	SCREW,CAP,HEXAGON H	2
3	PAFZZ	5306-00-733-7360	19207	7339360	BOLT,EYE	4
4	PAFZZ	5310-00-269-4040	81349	M45193/1-10CG5C	NUT,SELF-LOCKING,HE UOC: CT1,TC1,258,263	2
5	PAFZZ	5305-00-724-5910	80205	MS90725-162	SCREW,CAP,HEXAGON H UOC: CT1,TC1,258,263	2
6	PAFZZ	2540-01-369-7471	19207	10910697	TOWBAR,MOTOR VEHICL DRAWBAR, LEFT HAND UOC: CT1,TC1	1
6	PAFZZ	2510-00-040-2369	19207	7339474	BAR ASSEMBLY,DRAWBA LEFT HAND UOC: 257,258,263,646	1
7	PAFZZ	5305-00-071-1789	80204	B1821BH044C138N	SCREW,CAP,HEXAGON H UOC: 257,646	4
7	PAFZZ	5305-00-709-8515	80204	B1821BH044F138N	SCREW,CAP,HEXAGON H UOC: CT1,TC1,258,263	4
8	PAFZZ	5305-00-958-9428	80204	B1821BH075F600N	SCREW,CAP,HEXAGON H	1
9	PAFZZ	4010-00-733-9458	19207	7339458	CHAIN ASSEMBLY,SING	2
10	PAFZZ	2540-01-154-3892	19207	11675105	BRACKET AND PLUNGER UOC: CT1,TC1,258,263	1
11	PAFZZ	5310-00-057-7080	81349	M45913/1-7FG5C	NUT,SELF-LOCKING,HE UOC: CT1,TC1,258,263	4
11	PAFZZ	5310-00-575-5329	81349	M45913/1-7CG5C	NUT,SELF-LOCKING,HE UOC: 257,646	4
12	PAFZZ	2510-00-040-2370	19207	7339475	BAR ASSEMBLY,DRAWBA RIGHT HAND UOC: 257,258,263,646	1
12	PAFZZ	2510-01-480-7319	19207	10910698	BRACKET,MOUNTING DRAWBAR, RIGHT HAND UOC: CT1,TC1	1
13	PAFZZ	5310-00-832-9719	96906	MS51922-61	NUT,SELF-LOCKING,HE UOC: CT1,TC1,258,263	1
14	PAFZZ	5365-00-733-9359	19207	7339359	SPACER,SLEEVE	2
15	PAFZZ	5315-00-013-7258	80205	MS24665-497	PIN,COTTER UOC: 257,646	1
16	PAFZZ	5310-00-741-1028	19207	7411028	NUT,PLAIN,SLOTTED,H UOC: 257,646	1
17	PAFZZ	5305-00-947-2309	80204	B1821BH075F375N	SCREW,CAP,HEXAGON H UOC: 257,646	2
18	PAFZZ	5340-00-732-8315	71770	10383	BRACKET,MOUNTING UOC: 257,646	1

(1) ITEM NO.	(2) SMR CODE	(3) NSN	(4) CAGEC	(5) PART NUMBER	(6) DESCRIPTION AND USABLE ON CODE (UOC)	(7) QTY
19	PAFZZ	2530-00-733-9354	19207	7339354	LEG UOC: 257,646	1
20	PAFZZ	5305-00-719-5235	80204	B1821BH050F175N	SCREW,CAP,HEXAGON H UOC: 257,646	2
21	PAFZZ	2540-00-040-2373	19207	7339497	BRACKET ASSEMBLY,DR UOC: 257,646	1
22	PAFZZ	2540-00-773-5482	34623	A14047	COUPLER,DRAWBAR,RIN UOC: 257,646	1
23	PAFZZ	5310-00-832-9719	81349	M45913/2-12FG5C	NUT,SELF-LOCKING,HE UOC: 257,646	2

END OF FIGURE

FIELD MAINTENANCE
FRONT SUPPORT LEG

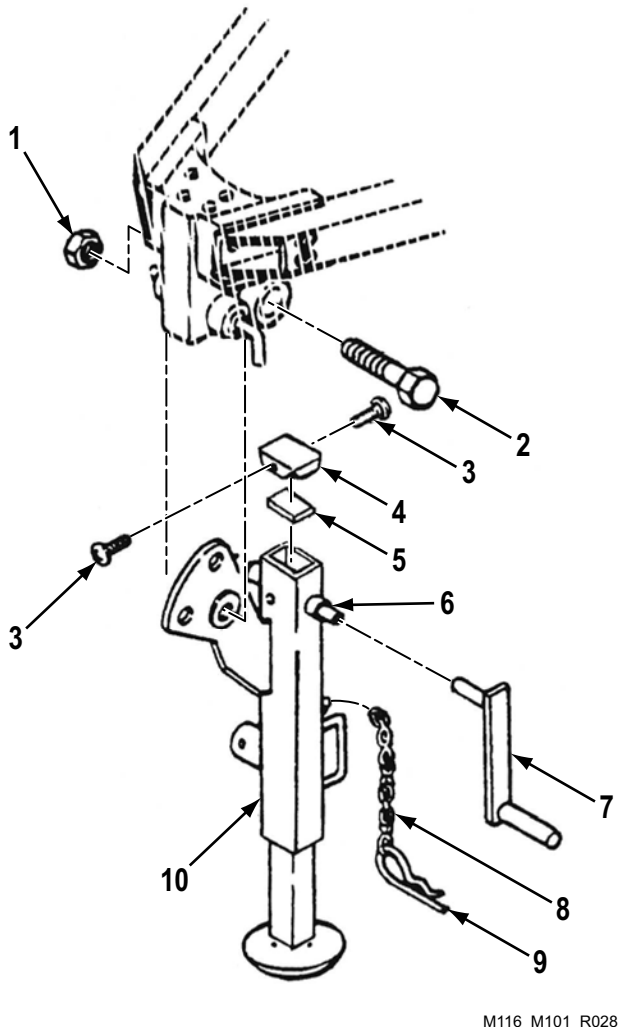

Figure 17. Front Support Leg.

(1) ITEM NO.	(2) SMR CODE	(3) NSN	(4) CAGEC	(5) PART NUMBER	(6) DESCRIPTION AND USABLE ON CODE (UOC)	(7) QTY
					GROUP 1507 LANDING GEAR, LEVELING JACKS (MECHANICAL OR HYDRAULIC)	
					FIG. 17. FRONT SUPPORT LEG.	
1	PAFZZ	5310-00-832-9719	81349	M45913/2-12FG5C	NUT,SELF-LOCKING,HE UOC: CT1,TC1,258,263	1
2	PAFZZ	5305-00-947-2309	80204	B1821BH075F375N	SCREW,CAP,HEXAGON H UOC: CT1,TC1,258,263	1
3	PAFZZ	5305-00-719-5235	80204	B1821BH050F175N	SCREW,CAP,HEXAGON H UOC: CT1,258,263	2
4	XDFZZ		02686	126861	CAP,LANDING JACK UOC: CT1,TC1	1
5	MFFZZ		02686	126853	GASKET,CAP MAKE FROM CORK P/N ASTM F104 (81346) UOC: CT1,TC1,258,263	1
6	PAFZZ	5315-00-489-0281	96906	MS35674-28	PIN,GROOVED,HEADLES	1
7	PAFZZ	5340-01-386-3974	19207	12441073	HANDLE,BOW UOC: CT1,TC1,258,263	1
8	MFFZZ		81348	RRC271-8	CHAIN,WELDLESS MAKE FROM CHAIN P/N NAS1455-2-14C (80205) UOC: CT1,TC1,258,263	1
9	PAFZZ	5315-01-147-0855	19207	11602356-2	PIN,LOCK UOC: CT1,TC1,258,263	1
10	PAFZZ	2590-01-388-0958	19207	12436705	LEG,SEMITRAILER RETRACTABLE SUPPORT UOC: CT1,TC1,258,263	1
					END OF FIGURE	

FIELD MAINTENANCE
SPRING ASSEMBLY

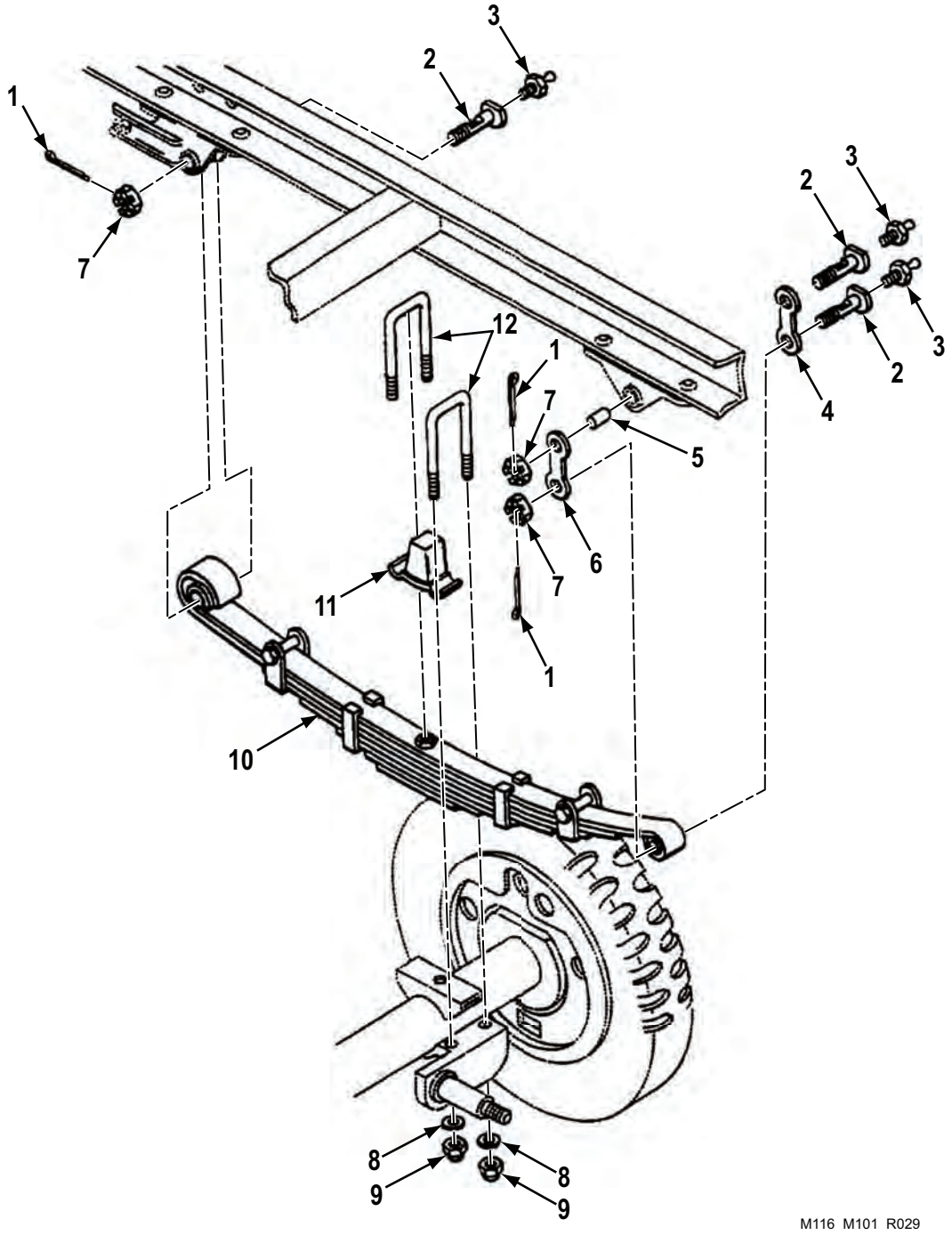

Figure 18. Spring Assembly. (Sheet 1 of 2)

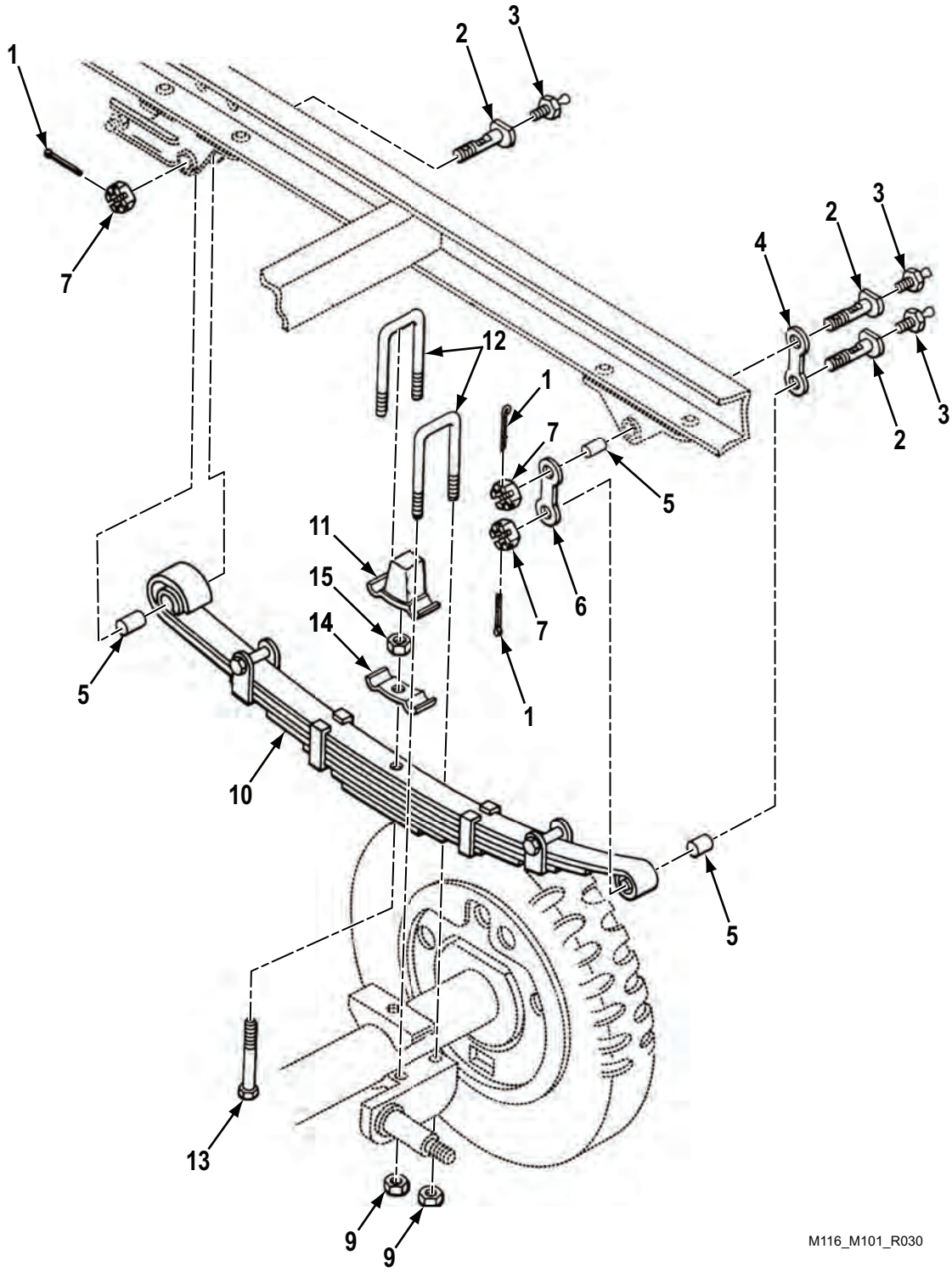

Figure 18. Spring Assembly. (Sheet 2 of 2)

(1) ITEM NO.	(2) SMR CODE	(3) NSN	(4) CAGEC	(5) PART NUMBER	(6) DESCRIPTION AND USABLE ON CODE (UOC)	(7) QTY
					GROUP 1601 SPRINGS	
					FIG. 18. SPRING ASSEMBLY.	
1	PAFZZ	5315-00-234-1671	80205	MS24665-633	PIN,COTTER UOC: 257,258,263,646	3
1	PAFZZ	5315-00-298-1481	80205	MS24665-357	PIN,COTTER UOC: CT1,TC1	3
2	PAFZZ	2510-00-741-0199	19207	7410199	PIN,VEHICULAR LEAF	3
3	PAFZZ	4730-00-050-4203	81343	AS15001-1	FITTING,LUBRICATION	3
4	PAFZZ	2510-00-733-9408	19207	7339408	PLATE SHACKLE INNER	1
5	PAFZZ	3120-00-810-7609	71366	CB1216-16	BEARING,SLEEVE	1
6	PAFZZ	2510-00-705-8968	19207	7339409	LINK,SPRING SHACKLE	1
7	PAFZZ	5310-00-998-0608	96906	MS35692-61	NUT,PLAIN,SLOTTED,H	3
8	PAFZZ	5310-00-809-5998	96906	MS27183-18	WASHER,FLAT UOC: CT1,TC1	4
9	PAFZZ	5310-00-062-4954	80205	MS21045-8	NUT,SELF-LOCKING,HE UOC: 257,646	8
9	PAFZZ	5310-00-877-5795	80205	MS21044N8	NUT,SELF-LOCKING,HE UOC: CT1,TC1,258,263	4
10	PAFZZ	2510-01-144-8847	19207	12313029	SPRING ASSEMBLY,LEA 5 LEAVES UOC: 258,263	1
10	PAFZZ	2510-01-353-3116	19207	12354240	SPRING ASSEMBLY,LEA 6 LEAVES UOC: CT1,TC1	1
10	PAFZZ	2510-00-733-9463	19207	7339463	SPRING ASSEMBLY,LEA UOC: 257,646	2
11	PCFZZ	5340-00-693-0681	19207	8382975	BUMPER,NONMETALLIC UOC: 257,646	2
11	PCFZZ	5340-01-147-8290	19207	12313016	BUMPER,NONMETALLIC UOC: CT1,TC1,258,263	1
12	PAFZZ	5306-00-733-9404	19207	7339404	BOLT,U UOC: 257,646	4
12	PAFZZ	5306-01-147-8225	19207	12313028	BOLT,U UOC: CT1,TC1,258,263	2
13	PAFZZ	5305-00-269-3244	80204	B1821BH038F250N	SCREW,CAP,HEXAGON H UOC: 257,646	1
14	PAFZZ	5340-00-733-9401	19207	7339401	STRAP,RETAINING UOC: 257,646	1
15	PAFZZ	5310-00-853-9335	96906	MS35691-13	NUT,PLAIN,HEXAGON UOC: 257,646	1

END OF FIGURE

FIELD MAINTENANCE
SHOCK ABSORBER

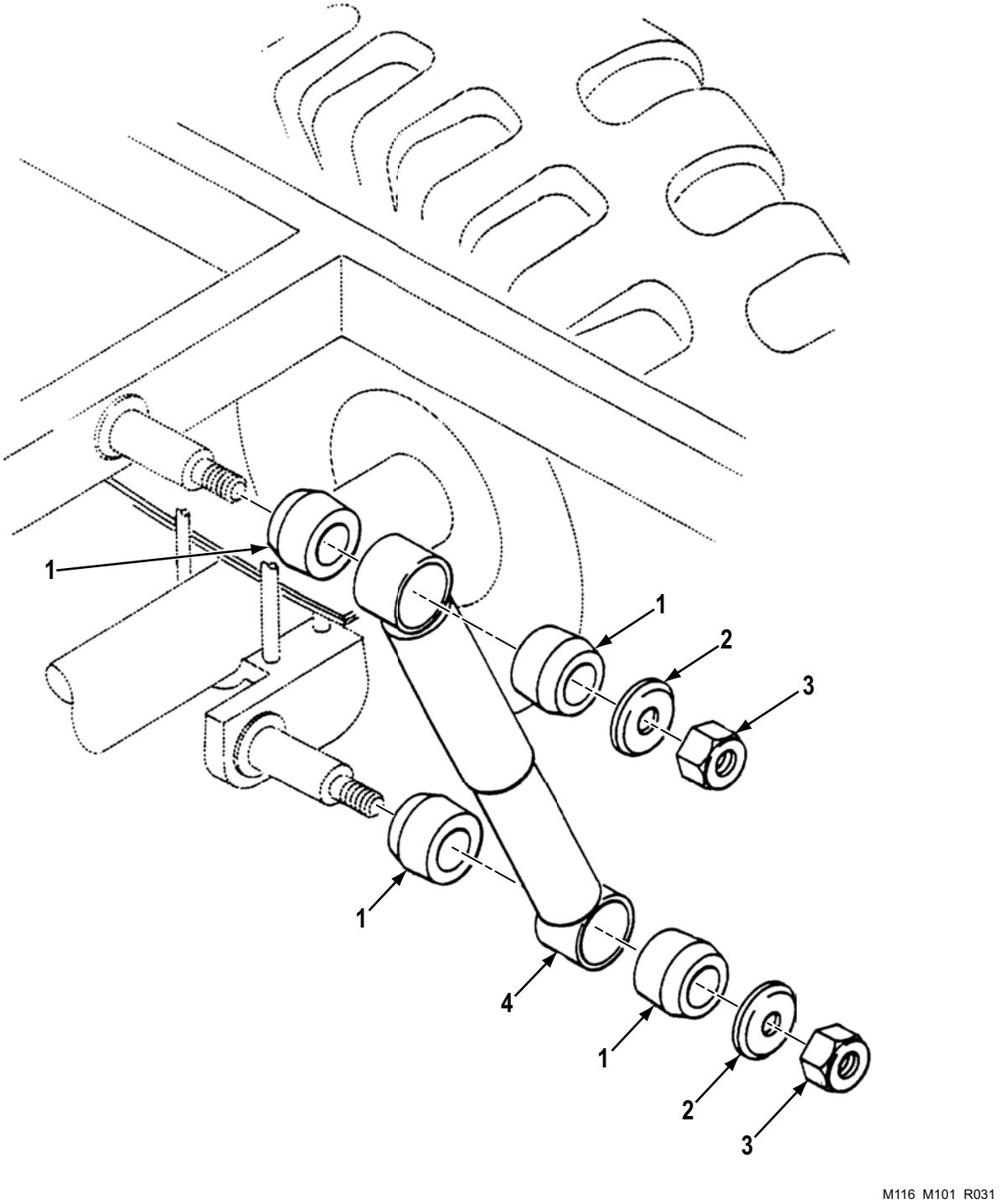

Figure 19. Shock Absorber.

(1) ITEM NO.	(2) SMR CODE	(3) NSN	(4) CAGEC	(5) PART NUMBER	(6) DESCRIPTION AND USABLE ON CODE (UOC)	(7) QTY
					GROUP 1604 SHOCK ABSORBER EQUIPMENT	
					FIG. 19. SHOCK ABSORBER.	
1	PAFZZ	5365-00-275-4519	19207	7339466	BUSHING,NONMETALLIC	4
2	PAFZZ	5310-00-733-9465	19207	7339465	WASHER,RECESSED	2
3	PAFZZ	5310-00-982-6809	80205	MS21044N10	NUT,SELF-LOCKING,HE UOC: 257,646	4
3	PAFZZ	5310-00-225-6408	81349	M45913/1-10FG5C	NUT,SELF-LOCKING,HE UOC: CT1,263	2
4	PAFZZ	2510-00-733-9464	19207	7339464	SHOCK ABSORBER,DIRE	1

END OF FIGURE

FIELD MAINTENANCE
CARGO BODY, RACK, AND TAILGATE ASSEMBLY

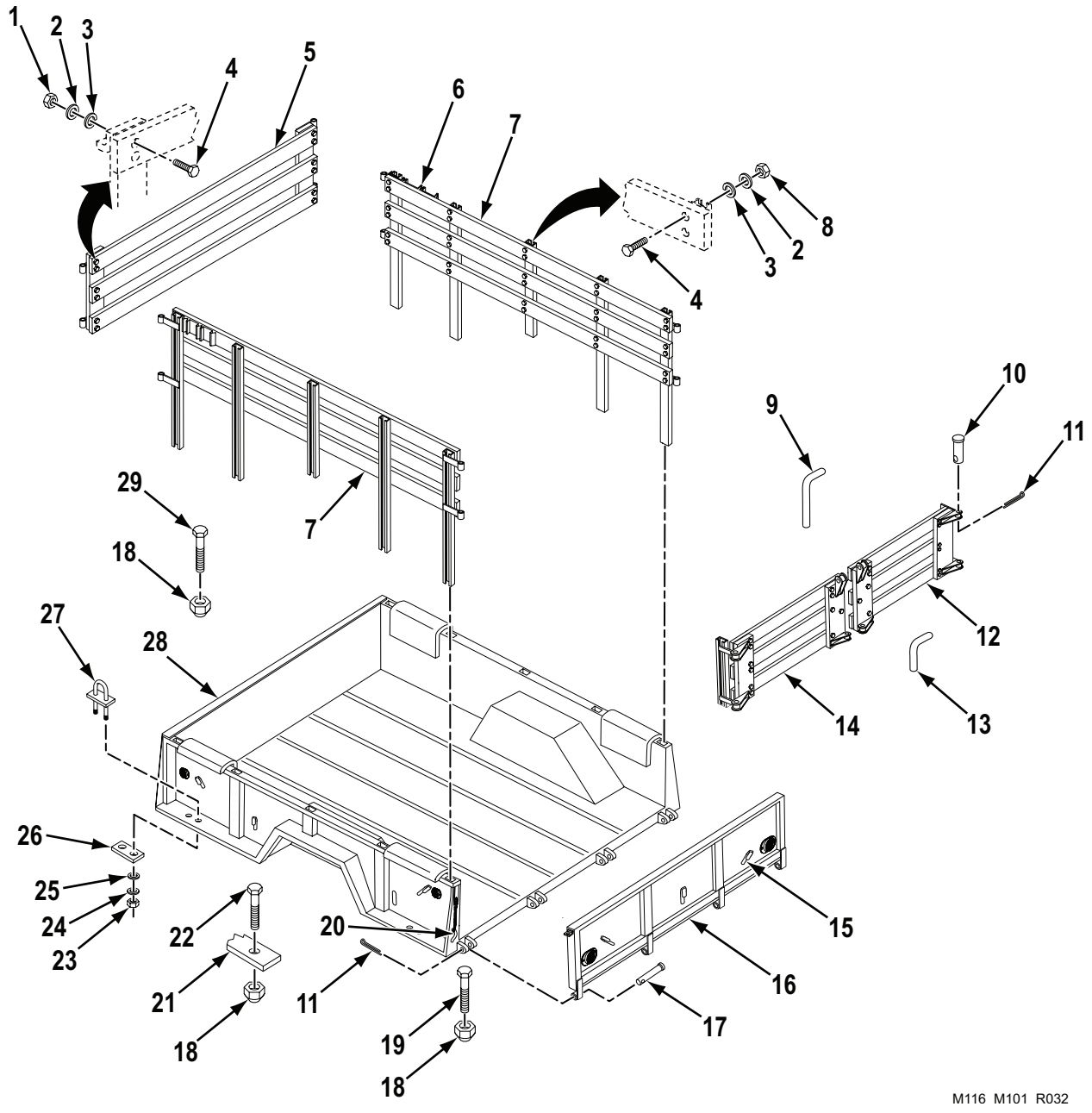

Figure 20. Cargo Body, Rack, and Tailgate Assembly. (Sheet 1 of 2)

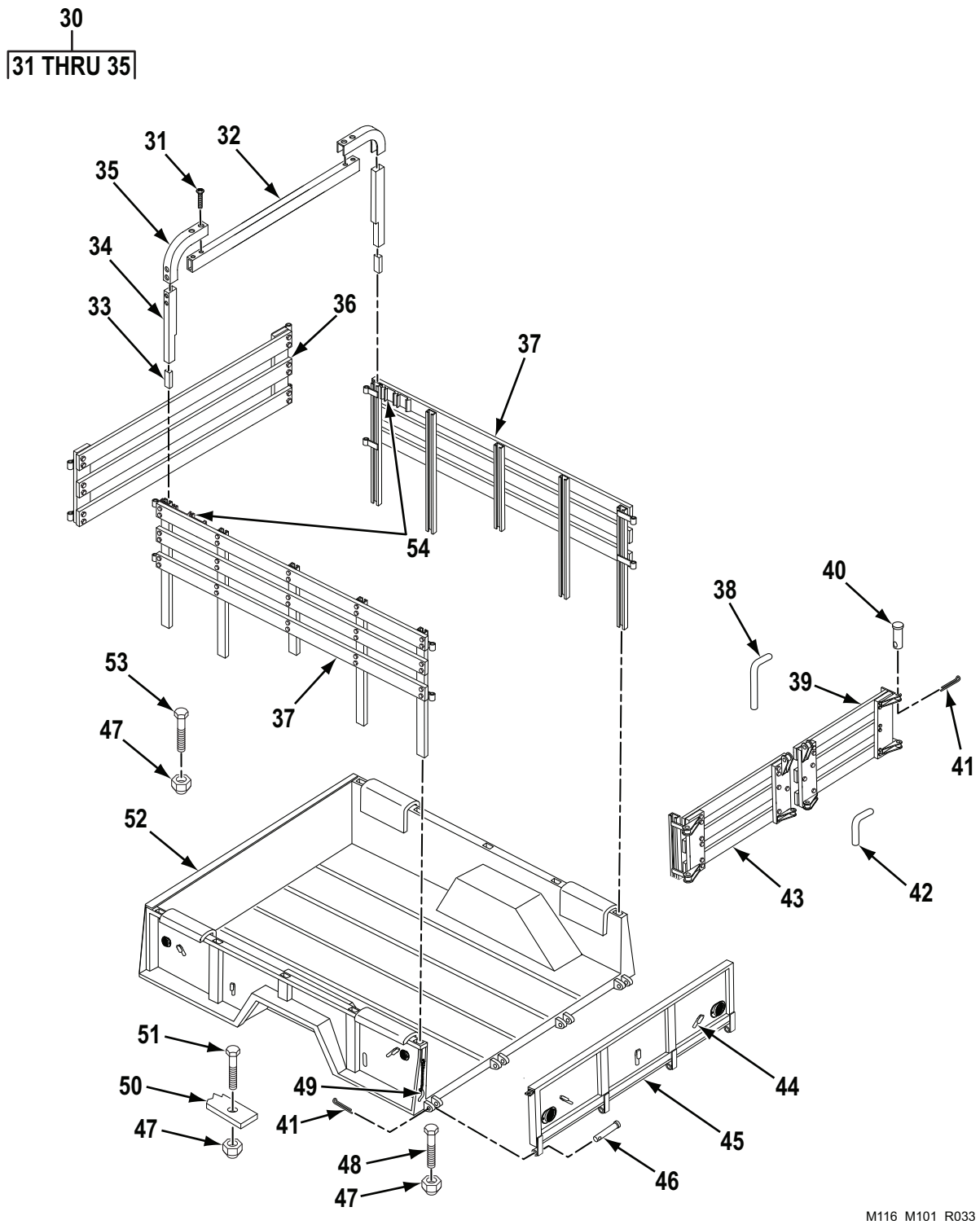

Figure 20. Cargo Body, Rack, and Tailgate Assembly. (Sheet 2 of 2)

(1) ITEM NO.	(2) SMR CODE	(3) NSN	(4) CAGEC	(5) PART NUMBER	(6) DESCRIPTION AND USABLE ON CODE (UOC)	(7) QTY
					GROUP 1810 CARGO BODY	
					FIG. 20. CARGO BODY, RACK, AND TAILGATE ASSEMBLY.	
1	PAFZZ	5310-00-929-6417	58536	AA55629-65	NUT,PLAIN,CAP UOC: TC1,263	34
2	PAFZZ	5310-00-582-5965	80205	MS35338-44	WASHER,LOCK UOC: TC1,263	74
3	PAFZZ	5310-00-809-4058	96906	MS27183-10	WASHER,FLAT UOC: TC1,263	74
4	PAFZZ	5306-00-182-1368	88044	AN525-416R20	SCREW,MACHINE UOC: TC1,263	74
5	PAFZZ	2510-01-389-0410	19207	12436772	STAKE,VEHICLE BODY FRONT COMPOSITE UOC: TC1,263	1
6	PFFZZ	5340-01-388-9098	19207	12441016	POCKET,STAKE USE WITH COMPOSITE SIDE RACKS UOC: TC1,263	8
7	PAFZZ	2510-01-389-0414	19207	12436773	SIDE RACK,VEHICLE B COMPOSITE, REVERSE TOP BOARD FOR L AND R SIDE UOC: TC1,263	1
8	PAFZZ	5310-00-043-0520	96906	MS35650-3252	NUT,PLAIN,HEXAGON USE WITH COMPOSITE RACKS UOC: TC1,263	40
9	PBFZZ	3040-01-317-1579	19207	7339434	CONNECTING LINK,RIG UOC: 263	1
10	PAFZZ	5315-00-733-9438	19207	7339438	PIN,STRAIGHT,HEADED UOC: TC1,263	8
11	PAFZZ	5315-00-839-5822	80205	MS24665-353	PIN,COTTER UOC: TC1,263	12
12	PAFZZ	2510-01-492-0298	19207	12440463	STAKE,VEHICLE BODY ENGATE RIGHT HAND, COMPOSITE UOC: TC1,263	1
13	PBFZZ	3040-01-317-1580	19207	7339435	CONNECTING LINK,RIG UOC: TC1,263	2
14	PAFZZ	2510-00-733-9504	19207	12440462	SIDE RACK,VEHICLE B ENDGATE LEFT HAND, COMPOSITE UOC: TC1,263	1
15	PAFZZ	4030-01-171-8254	19207	7328241	HOOK,CARGO UOC: TC1,263	11
16	PAFZZ	2510-01-122-1405	19207	7339510	TAILGATE,VEHICLE BO UOC: TC1,263	1
17	PAFZZ	5315-00-733-9395	19207	7339395	PIN,STRAIGHT,HEADED USE WITH OLD STYLE CARGO BODY UOC: TC1,263	4
17	PAFZZ	5315-01-056-6023	80205	MS20392-7C125	PIN,STRAIGHT,HEADED USE WITH NEW STYLE CARGO BODY UOC: TC1,263	4

(1) ITEM NO.	(2) SMR CODE	(3) NSN	(4) CAGEC	(5) PART NUMBER	(6) DESCRIPTION AND USABLE ON CODE (UOC)	(7) QTY
18	PAFZZ	5310-00-087-4652	81349	M45913/1-6CG5C	NUT,SELF-LOCKING,HE UOC: TC1,263	18
19	PAFZZ	5305-01-140-9118	80204	B1821BH038C088N	SCREW,CAP,HEXAGON H UOC: TC1,263	5
20	PAFZZ	2540-01-126-7870	19207	8382970	CHAIN AND PIN ASSEM UOC: TC1,263	2
21	PAFZZ	5340-00-733-9366	19207	7339366	CLAMP,SYNCHRO UOC: TC1,263	8
22	PAFZZ	5306-00-088-5742	80205	MS35751-70	BOLT,SQUARE NECK UOC: TC1,263	10
23	PAFZZ	5310-00-732-0560	96906	MS51968-14	NUT,PLAIN,HEXAGON UOC: 263	1
24	PAFZZ	5310-00-584-5272	80205	MS35338-48	WASHER,LOCK UOC: TC1,263	8
25	PAFZZ	5310-00-809-5998	96906	MS27183-18	WASHER,FLAT UOC: TC1,263	8
26	PAFZZ	5340-01-467-1461	19207	12406440-1	PLATE,MOUNTING USE WITH NEW STYLE CARGO BODY. UOC: TC1,263	1
27	PAFZZ	5306-01-495-0788	19207	12436703	BOLT,U USE WITH NEW STYLE CARGO BOX. UOC: TC1,263	4
28	PBFZZ	2510-01-388-6424	19207	12436764	BODY,CARGO TRAILER NEW STYLE,WITH TAILGATE UOC: TC1,263	1
28	PBFZZ	2510-01-464-6923	19207	12436764-1	BODY,CARGO TRAILER UOC: TC1	1
29	PAFZZ	5305-00-068-0511	80204	B1821BH038C125N	SCREW,CAP,HEXAGON H UOC: TC1,263	3
30	PAFFF	2540-00-278-6560	19207	7339506	BOW,VEHICULAR TOP ASSEMBLY UOC: 257	5
31	PAFZZ	5305-00-984-5681	80205	MS35206-301	. SCREW,MACHINE SCREW,MACHINE UOC: 257	8
32	XAFZZ		19207	7339430	. BOW,VEHICULAR TOP UOC: 257	1
33	XAFZZ		19207	7339432	. CAP,END UOC: 257	2
34	PAFZZ	2510-00-179-3642	19207	7339431	. STAKE,VEHICLE BODY UOC: 257	2
35	XAFZZ		19207	7064501	. CORNER UOC: 257	2
36	PAFZZ	2510-01-389-0410	19207	12436772	STAKE,VEHICLE BODY UOC: 257	1
37	PAFZZ	2510-01-389-0414	19207	12436773	SIDE RACK,VEHICLE L.H. UOC: 257	1
37	PAFZZ	2510-00-650-0998	19207	12440461	SIDE RACK,VEHICLE R.H. UOC: 257	1

(1) ITEM NO.	(2) SMR CODE	(3) NSN	(4) CAGEC	(5) PART NUMBER	(6) DESCRIPTION AND USABLE ON CODE (UOC)	(7) QTY
38	PBFZZ	3040-01-317-1579	19207	7339434	CONNECTING LINK,RIG UOC: 257	1
39	PAFZZ	2510-00-733-9505	19207	7339505	SIDE RACK,VEHICLE B UOC: 257	1
40	PAFZZ	5315-00-733-9438	19207	7339438	PIN,STRAIGHT,HEADED UOC: 257	8
41	PAFZZ	5315-00-839-5822	80205	MS24665-353	PIN,COTTER UOC: 257	12
42	PBFZZ	3040-01-317-1580	19207	7339435	CONNECTING LINK,RIG UOC: 257	2
43	PAFZZ	2510-00-733-9504	19207	12440462	SIDE RACK,VEHICLE B UOC: 257	1
44	PAFZZ	4030-01-171-8254	19207	7328241	HOOK,CARGO UOC: 257	11
45	PAFZZ	2510-01-122-1405	19207	7339510	TAILGATE,VEHICLE BO UOC: 257	1
46	PAFZZ	5315-00-733-9395	19207	7339395	PIN,STRAIGHT,HEADED UOC: 257	4
47	PAFZZ	5310-00-087-4652	81349	M45913/1-6CG5C	NUT,SELF-LOCKING,HE UOC: 257	18
48	PAFZZ	5305-00-115-9526	80204	B1821BH038C075D	SCREW,CAP,HEXAGON H UOC: 257	5
49	PAFZZ	2540-01-126-7870	19207	8382970	CHAIN AND PIN ASSEM UOC: 257	2
50	PAFZZ	5340-00-733-9366	19207	7339366	CLAMP,SYNCHRO UOC: 257	8
51	PAFZZ	5306-00-088-5742	80205	MS35751-70	BOLT,SQUARE NECK UOC: 257	10
52	PBFZZ	2510-01-388-6424	19207	12436764	BODY,CARGO TRAILER UOC: 257	1
53	PAFZZ	5305-00-068-0511	80204	B1821BH038C125N	SCREW,CAP,HEXAGON H UOC: 257	3
54	XAFZZ		19207	7339426	CLIP,BOW UOC: 257	1

END OF FIGURE

FIELD MAINTENANCE
CANVAS COVER ASSEMBLY AND BOWS

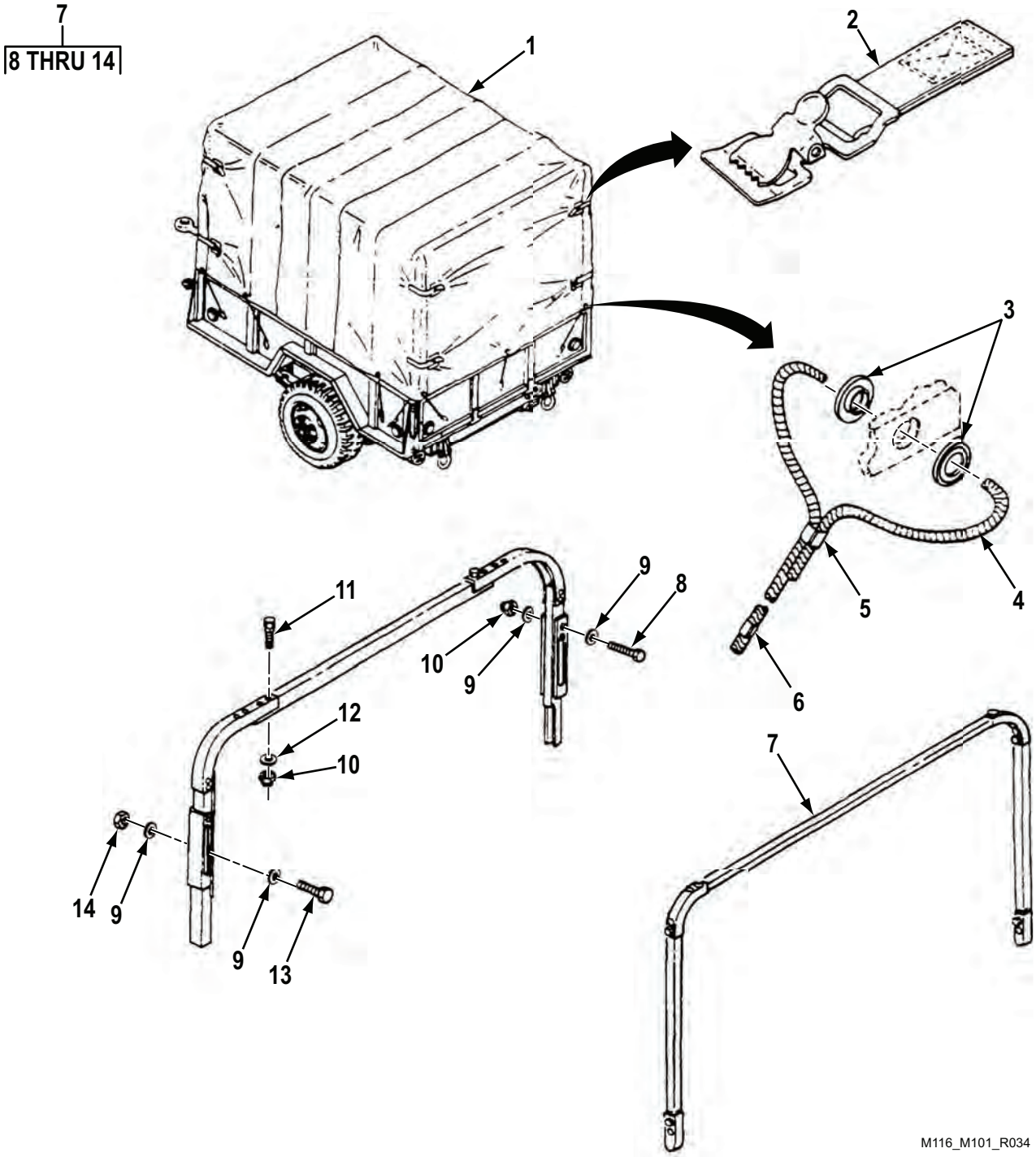

Figure 21. Canvas Cover Assembly and Bows. (Sheet 1 of 2)

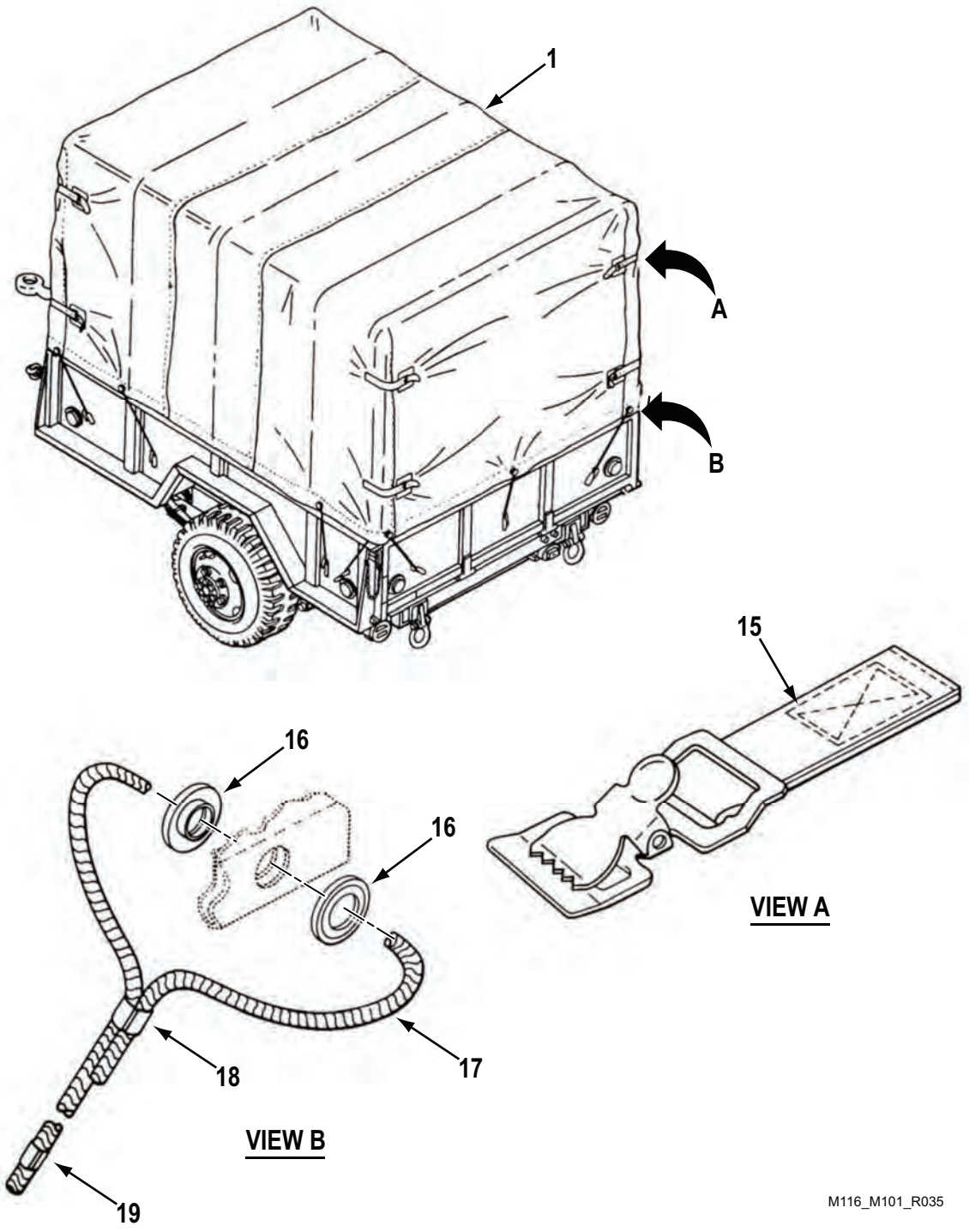

Figure 21. Canvas Cover Assembly and Bows. (Sheet 2 of 2)

(1) ITEM NO.	(2) SMR CODE	(3) NSN	(4) CAGEC	(5) PART NUMBER	(6) DESCRIPTION AND USABLE ON CODE (UOC)	(7) QTY
					GROUP 2201 CANVAS, RUBBER, OR PLASTIC ITEMS	
					FIG. 21. CANVAS COVER ASSEMBLY AND BOWS.	
1	PAFZZ	2540-01-325-7719	19207	8382966-1	COVER,FITTED,VEHICU COLOR: TAN	1
1	PAFZZ	2540-01-463-9193	19207	8382966-2	COVER,FITTED,VEHICU COLOR: CAMOFLAGE	1
2	PAFZZ	5340-01-168-1534	19207	8710494	STRAP,WEBBING UOC: TC1,263	1
3	PAFZZ	5325-00-641-1612	21450	501437	GROMMET,METALLIC UOC: TC1,263	1
4	XDFZZ		81348	21-R-162	ROPE UOC: TC1,263	1
5	PAFZZ	5340-01-031-6310	19207	7979453	CLIP,SPRING TENSION UOC: TC1,263	1
6	PAFZZ	5340-01-031-6268	19207	7979452	CLIP,END,STRAP UOC: TC1,263	1
7	PAFFF	2540-00-693-0744	19207	12441082-1	BOW,VEHICULAR TOP UOC: TC1,263	1
8	PAFZZ	5305-00-071-2512	80204	B1821BH025C225N	. SCREW,CAP,HEXAGON H UOC: TC1,263	2
9	PAFZZ	5310-00-044-6477	96906	MS51412-25	. WASHER,FLAT UOC: 263	4
10	PAFZZ	5310-00-088-1251	81349	M45913/1-4CG5C	. NUT,SELF-LOCKING,HE UOC: TC1,263	6
11	PAFZZ	5305-00-267-8959	80204	B1821BH025F225N	. SCREW,CAP,HEXAGON H UOC: TC1,263	2
12	PAFZZ	5310-00-044-6477	96906	MS51412-25	. WASHER,FLAT UOC: 263	8
13	PAFZZ	5306-00-702-6344	80205	MS35751-15	. BOLT,SQUARE NECK UOC: TC1,263	4
14	PAFZZ	5310-01-388-4494	96906	MS51473-01	. NUT,PLAIN,HEXAGON UOC: TC1,263	2
15	PAFZZ	5340-01-168-1534	19207	8710494	STRAP,WEBBING UOC: 257	8
16	PAFZZ	5325-00-641-1612	21450	501437	GROMMET,METALLIC UOC: 257	14
17	XDFZZ		81348	21-R-162	ROPE UOC: 257	1
18	PAFZZ	5340-01-031-6310	19207	7979453	CLIP,SPRING TENSION UOC: 257	14

(1) ITEM NO.	(2) SMR CODE	(3) NSN	(4) CAGEC	(5) PART NUMBER	(6) DESCRIPTION AND USABLE ON CODE (UOC)	(7) QTY
19	PAFZZ	5340-01-031-6268	19207	7979452	CLIP,END,STRAP UOC: 257	14

END OF FIGURE

FIELD MAINTENANCE
REFLECTOR

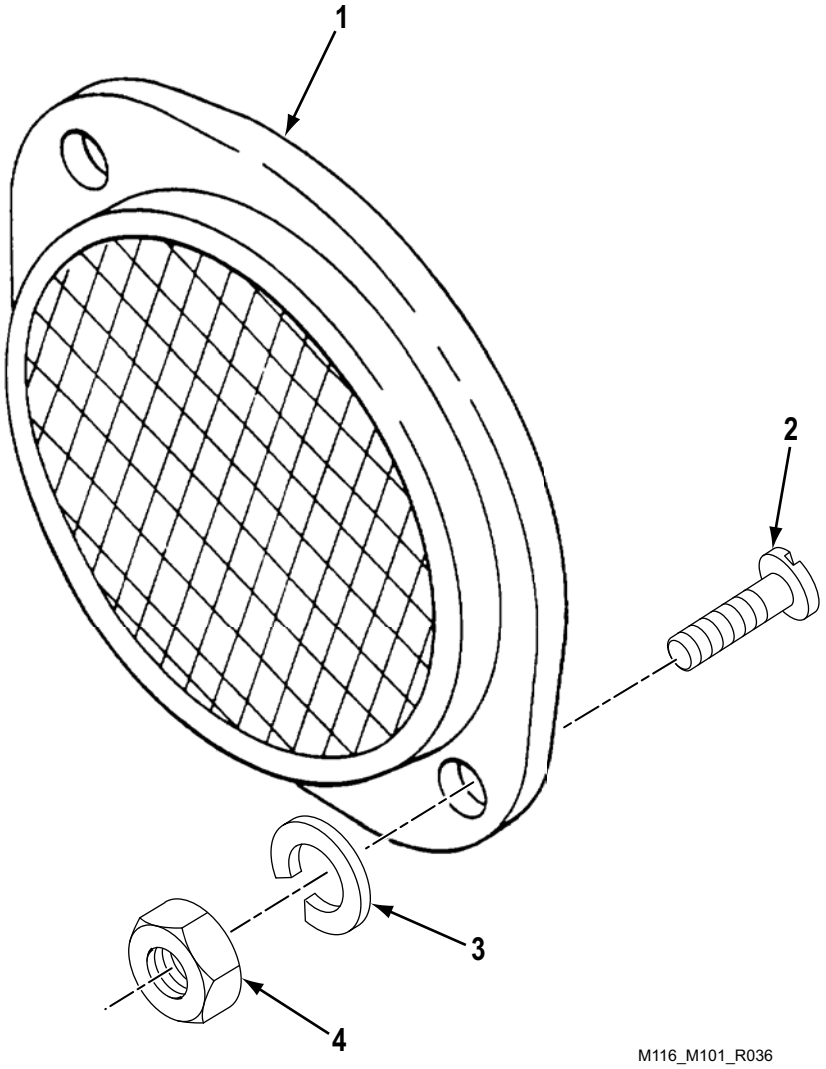

Figure 22. Reflector (M101A1, M101A2, M101A3, and M116A1).

(1) ITEM NO.	(2) SMR CODE	(3) NSN	(4) CAGEC	(5) PART NUMBER	(6) DESCRIPTION AND USABLE ON CODE (UOC)	(7) QTY
					GROUP 2200 BODY, CHASSIS OR HULL, AND ASSEMBLY ITEMS	
					FIG. 22. REFLECTOR (M101A1, M101A2, M101A3, AND M116A1).	
1	PAFZZ	9905-00-205-2795	58536	AA52428-1	REFLECTOR,INDICATIN RED	1
1	PAFZZ	9905-00-202-3639	58536	AA52428-2	REFLECTOR,INDICATIN AMBER	1
2	PAFZZ	5310-00-723-4458	96906	MS35690-404	NUT,PLAIN,HEXAGON USE WITH OLD STYLE CARGO BODY	2
2	PAFZZ	5310-00-761-6882	96906	MS51967-2	NUT,PLAIN,HEXAGON USE WITH NEW CARGO BODY. UOC: TC1,257,263,646	2
3	PAFZZ	5310-00-582-5965	80205	MS35338-44	WASHER,LOCK	2
4	PAFZZ	5305-00-988-1723	80205	MS35206-279	SCREW,MACHINE USE WITH NEW STYLE CARGO BODY. UOC: TC1,263	2
4	PAFZZ	5305-00-988-1728	80205	MS35206-287	SCREW,MACHINE USE WITH OLD STYLE CARGO BODY	2

END OF FIGURE

FIELD MAINTENANCE
DATA PLATES

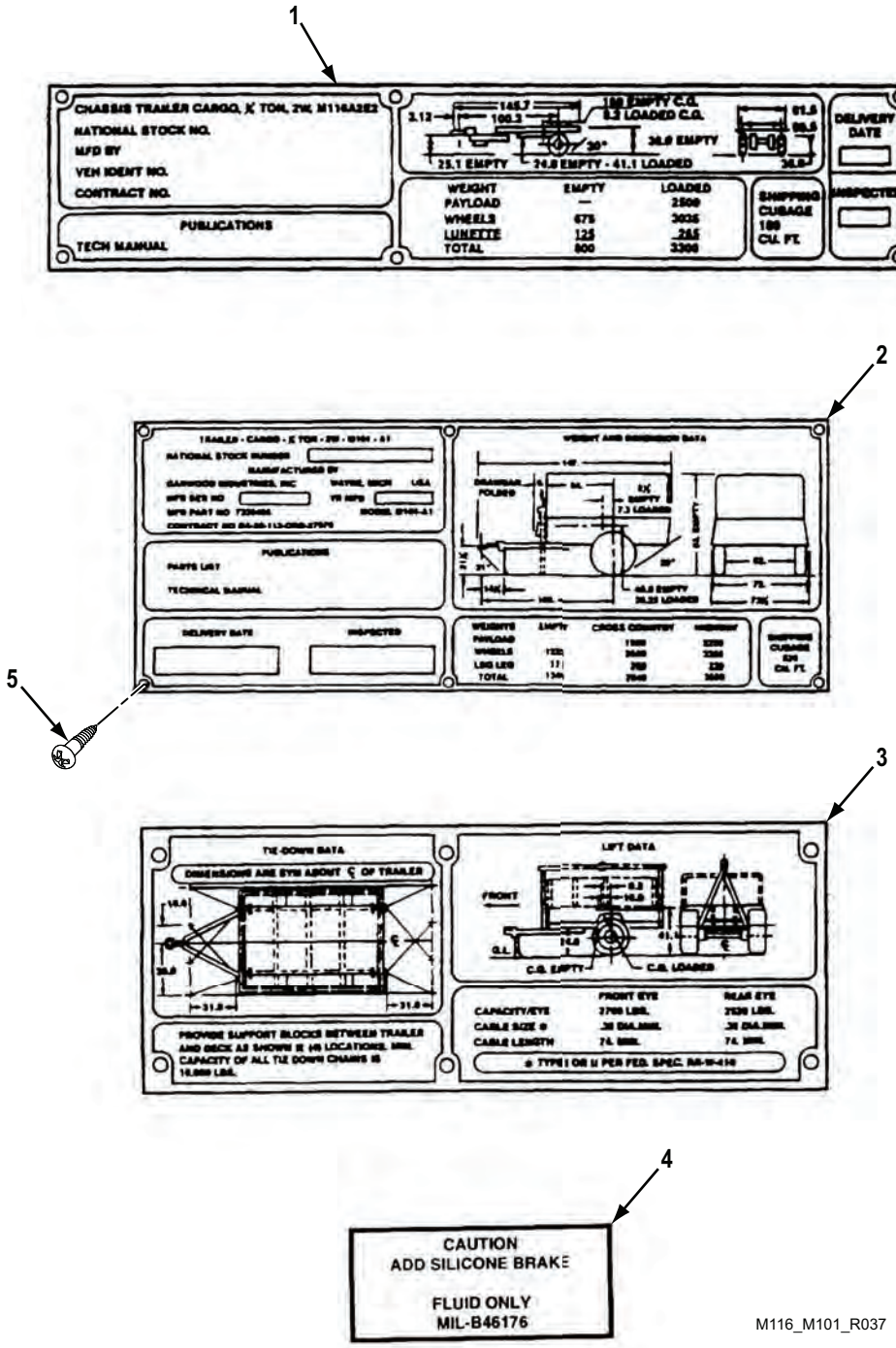

Figure 23. Data Plates. (Sheet 1 of 2)

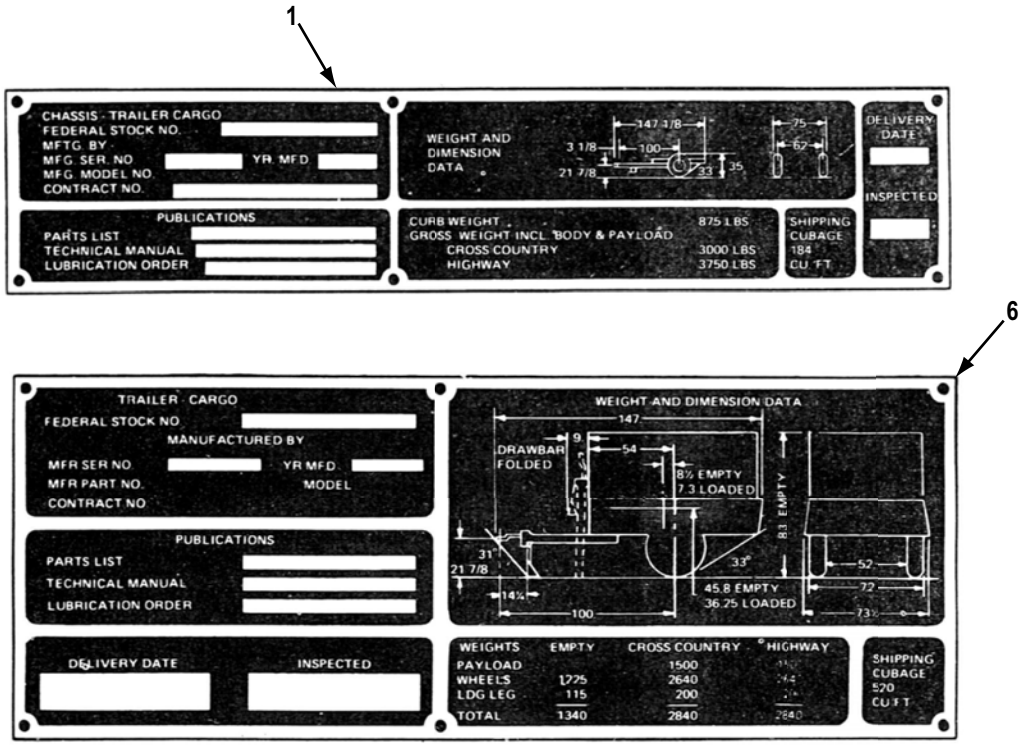

Figure 23. Data Plates. (Sheet 2 of 2)

(1) ITEM NO.	(2) SMR CODE	(3) NSN	(4) CAGEC	(5) PART NUMBER	(6) DESCRIPTION AND USABLE ON CODE (UOC)	(7) QTY
					GROUP 2210 DATA PLATES AND INSTRUCTION HOLDERS	
					FIG. 23. DATA PLATES.	
1	PAFZZ	9905-01-495-1373	19207	12362799	PLATE,IDENTIFICATIO DATA UOC: CT1	1
1	PFFZZ	9905-00-878-4191	19207	10910692	PLATE,IDENTIFICATIO DATA UOC: 646	1
1	PFFZZ	9905-01-147-5836	19207	12296614	PLATE,IDENTIFICATIO DATA UOC: 257,258,263,646	1
2	PFFZZ	9905-01-147-5837	19207	12296615	PLATE,IDENTIFICATIO DATA UOC: 263	1
3	PAFZZ	9905-01-502-4575	19207	12441068	DECAL DATA UOC: TC1	1
3	XDFZZ		19207	12436756	DECAL TRANSPORTATION UOC: 263	1
3	PAFZZ	9905-01-470-9026	19207	12362800	PLATE,INSTRUCTION TRANSPORTATION UOC: CT1	1
4	PCFZZ	7690-01-111-2265	19207	12302516	DECAL CAUTION, SILICONE BRAKE FLUID UOC: CT1,TC1,258,263	1
5	PAFZZ	5305-00-951-2437	80205	MS21318-35	SCREW,DRIVE UOC: CT1,TC1,258,263	6
6	PAFZZ	9905-00-878-4192	19207	10910691	PLATE,IDENTIFICATIO UOC: 257	1

END OF FIGURE

FIELD MAINTENANCE
REAR STABILIZER KIT

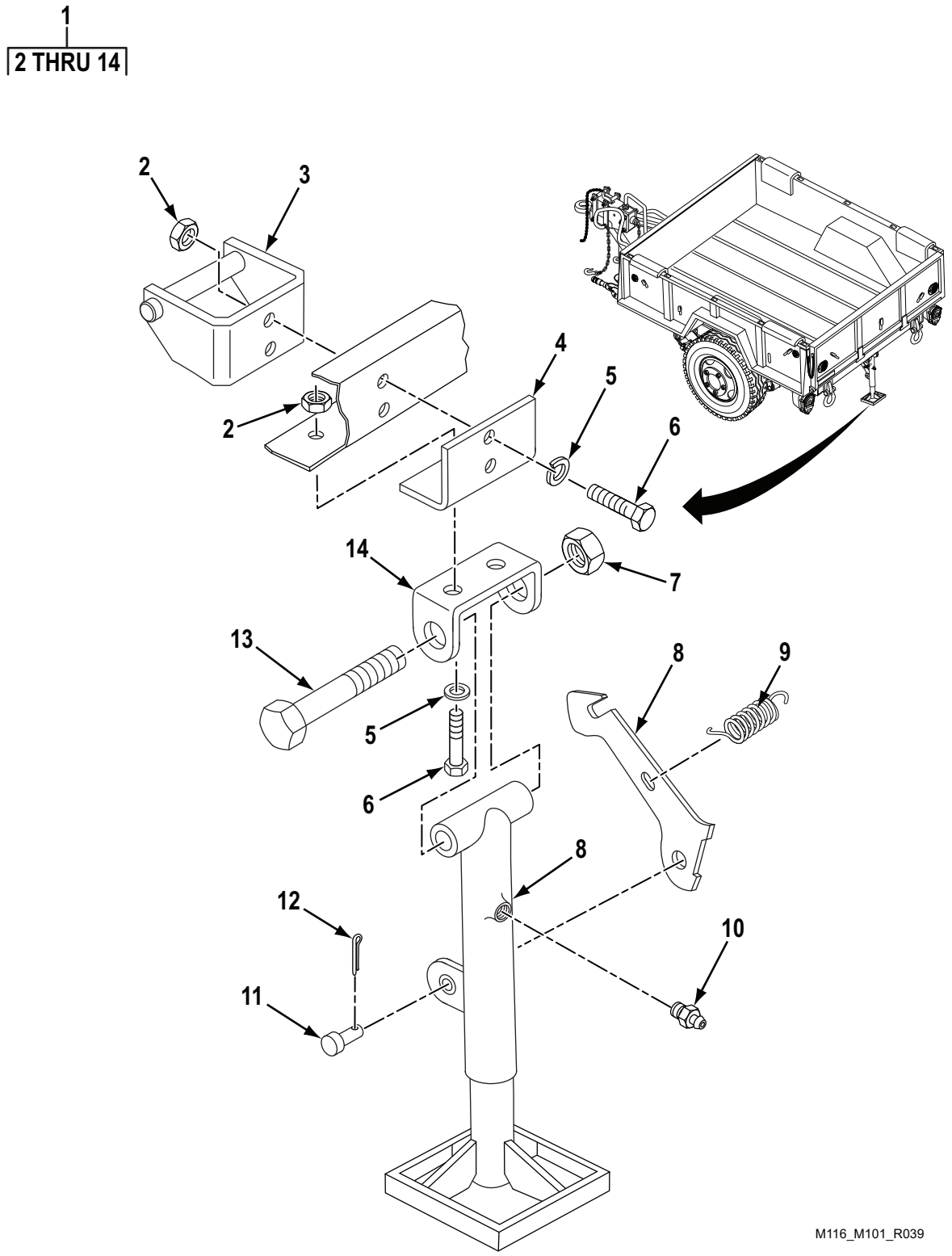

Figure 24. Rear Stabilizer Kit.

(1) ITEM NO.	(2) SMR CODE	(3) NSN	(4) CAGEC	(5) PART NUMBER	(6) DESCRIPTION AND USABLE ON CODE (UOC)	(7) QTY
					GROUP 3307 SPECIAL PURPOSE KITS	
					FIG. 24. REAR STABILIZER KIT.	
1	PAFFF	2590-01-179-9080	19207	10944400	STABILIZER KIT,REAR REQUIRED FOR GENERATOR SETS ONLY	1
2	PAFZZ	5310-00-732-0559	96906	MS51968-8	. NUT,PLAIN,HEXAGON	4
3	PAFZZ	5340-01-180-8610	19207	10944402	. BRACKET,DOUBLE ANGL	1
4	PFFZZ	5340-01-195-5919	19207	10944399	. BRACKET,ANGLE	1
5	PAFZZ	5310-00-637-9541	96046	20-14-5	. WASHER,LOCK	4
6	PAFZZ	5305-00-269-3238	80204	B1821BH038F125N	. SCREW,CAP,HEXAGON H	4
7	PAFZZ	5310-00-225-6408	81349	M45913/1-10FG5C	. NUT,SELF-LOCKING,HE	1
8	PAFZZ	2590-00-439-6288	19207	10916389	. JACK,LEVELING-SUPPO	1
9	PAFZZ	5360-00-886-8064	19207	8681937	. SPRING,HELICAL,EXTE	1
10	PAFZZ	4730-00-050-4203	81343	AS15001-1	. FITTING,LUBRICATION	1
11	PAFZZ	5315-00-904-2800	96906	MS20392-7C27	. PIN,STRAIGHT,HEADED	1
12	PAFZZ	5315-00-839-5822	80205	MS24665-353	. PIN,COTTER 1/8 X 1"	1
13	PAFZZ	5306-00-883-2619	19207	8681932	. BOLT,SHOULDER	1
14	PAFZZ	3040-00-177-8056	19207	8681933	. BRACKET,EYE,NONROTA	1

END OF FIGURE

FIELD MAINTENANCE
BULK

(1) ITEM NO.	(2) SMR CODE	(3) NSN	(4) CAGEC	(5) PART NUMBER	(6) DESCRIPTION AND USABLE ON CODE (UOC)	(7) QTY
					GROUP 9501 HARDWARE SUPPLIES AND BULK MATERIEL, COMMON	
					FIG. BULK. BULK.	
1	PAFZZ	4010-00-009-5816	80205	NAS1455-2-14C	CHAIN,WELDLESS UOC: CT1,TC1,258,263	1
2	PAFZZ	5330-00-178-9791	81346	ASTM F104	CORK SHEET UOC: CT1,TC1,258,263	1
3	PAFZZ	4710-00-102-0108	19207	10943231	TUBE,BENT,METALLIC UOC: 258,263	1
4	PAFZZ	4710-00-350-9896	81349	M3520-B80B01G	TUBE,METALLIC UOC: CT1,TC1,258,263	1
5	XDFZZ		81346	21-R-162	ROPE	1

END OF FIGURE

FIELD MAINTENANCE
NATIONAL STOCK NUMBER INDEX

STOCK NUMBER	FIG.	ITEM
5305-00-267-8953	11	12
5305-00-267-8959	21	11
5305-00-269-2811	7	5
5305-00-269-3234	4	14
5305-00-269-3236	8	3
5305-00-269-3238	15	12
	24	6
5305-00-269-3239	15	12
5305-00-269-3244	18	13
5310-00-269-4040	16	4
5365-00-275-4519	19	1
5310-00-275-6635	10	9
2540-00-278-6560	20	30
4730-00-278-8853	11	4
5340-00-282-7515	4	9
5310-00-285-7037	2	5
5330-00-291-6658	10	35
5331-00-297-7106	1	22
5315-00-298-1481	18	1
5306-00-308-1392	7	12
5340-00-312-1148	8	32
5310-00-335-4735	8	21
6220-00-337-6471	1	13
4710-00-350-9896	BULK	4
5340-00-359-1046	8	20
5310-00-368-4954	8	29
5360-00-384-0004	8	15
5360-00-384-0025	8	11
5340-00-385-3288	4	3
5310-00-395-2948	4	2
5940-00-399-6676	2	17
5310-00-407-9566	1	27
	7	11
5305-00-432-4203	4	4
6220-00-433-5966	1	26
2590-00-439-6288	24	8
5310-00-449-2376	13	14
5331-00-462-0907	1	3
5935-00-462-6603	2	9
5365-00-475-8291	7	2
5310-00-483-8789	15	10
5315-00-489-0281	17	6
4720-00-489-5350	10	33
6220-00-500-0437	1	14
4710-00-511-1692	10	31
5310-00-514-6674	9	4
5310-00-518-5566	12	31
2610-00-540-4719	14	2
2640-00-555-2829	14	3
5935-00-572-9180	2	10
5310-00-575-5329	16	11
5310-00-582-5965	11	25
	20	2

STOCK NUMBER	FIG.	ITEM
	22	3
5310-00-584-5272	20	24
2530-00-585-6079	9	1
5310-00-595-7237	8	26
6240-00-617-0991	1	10
5325-00-623-0928	1	30
5330-00-629-4961	12	19
5305-00-633-0785	1	29
5310-00-637-9541	1	4
	1	15
	4	13
	8	5
	24	5
5325-00-641-1612	21	3
	21	16
2510-00-650-0998	20	37
6220-00-669-5623	1	13
5330-00-678-9047	1	32
5340-00-693-0681	18	11
2540-00-693-0744	21	7
6150-00-693-3452	1	17
5306-00-702-6344	21	13
2510-00-705-8968	18	6
2510-00-705-8969	15	11
5305-00-709-8423	10	7
5305-00-709-8515	16	7
5305-00-709-8542	10	25
5305-00-710-4205	10	6
2530-00-715-7260	10	21
5305-00-719-5209	10	26
5305-00-719-5235	16	20
	17	3
5310-00-723-4458	22	2
5305-00-724-5910	16	5
5310-00-732-0559	8	6
	8	25
	24	2
5310-00-732-0560	10	28
	20	23
5340-00-732-8315	16	18
5306-00-733-7360	16	3
2530-00-733-9354	16	19
5365-00-733-9359	16	14
5340-00-733-9365	15	2
5340-00-733-9366	20	21
	20	50
5340-00-733-9367	15	6
5315-00-733-9395	20	17
	20	46
5340-00-733-9401	18	14
5306-00-733-9404	18	12
2510-00-733-9406	15	11
2510-00-733-9407	15	13

STOCK NUMBER	FIG.	ITEM
2510-00-733-9408	18	4
5315-00-733-9438	20	10
	20	40
4010-00-733-9458	16	9
2510-00-733-9463	18	10
2510-00-733-9464	19	4
5310-00-733-9465	19	2
2510-00-733-9504	20	14
	20	43
2510-00-733-9505	20	39
5310-00-734-8982	12	20
5310-00-734-9223	12	21
5330-00-737-3354	10	38
2510-00-741-0199	18	2
5310-00-741-1028	16	16
5310-00-741-4702	12	22
6250-00-741-5451	1	31
6220-00-752-6018	1	23
6220-00-752-6020	1	23
5310-00-761-6882	7	10
	22	2
5305-00-764-0070	1	34
4730-00-773-2163	10	39
2540-00-773-5482	16	22
6220-00-775-2384	1	33
5340-00-778-2738	11	8
2530-00-786-0195	12	29
5310-00-807-1469	7	1
5310-00-809-4058	11	20
	20	3
5310-00-809-5998	18	8
	20	25
5310-00-810-1786	7	9
3120-00-810-7609	18	5
6150-00-830-6672	3	1
2590-00-830-6673	2	8
5310-00-832-9719	16	13
	16	23
	17	1
2590-00-832-9976	2	2
5935-00-833-8561	2	15
5970-00-833-8562	2	16
5310-00-833-8567	2	11
5315-00-839-5822	20	11
	20	41
	24	12
6220-00-846-9745	1	25
5360-00-852-9790	8	28
5310-00-853-9335	18	15
5305-00-855-0957	4	1
5305-00-855-0958	11	9
5305-00-855-0964	11	15
5340-00-860-0555	2	2

STOCK NUMBER	FIG.	ITEM
	4	15
5325-00-864-2993	11	14
3040-00-872-8567	8	7
5310-00-874-2922	8	8
5360-00-877-2964	8	14
5310-00-877-5795	10	2
	16	1
	18	9
5310-00-877-5972	15	3
9905-00-878-4191	23	1
9905-00-878-4192	23	6
5305-00-881-3824	2	6
5306-00-883-2619	24	13
5306-00-884-4819	8	31
5360-00-886-8064	24	9
5305-00-889-3002	1	19
5315-00-904-2800	24	11
4730-00-908-3194	10	32
5340-00-912-8871	4	17
5310-00-929-6417	20	1
5310-00-934-9758	2	3
	4	10
5340-00-936-5284	7	7
5305-00-945-6412	16	2
5305-00-947-2309	16	17
	17	2
5305-00-947-4356	15	9
5305-00-949-6184	10	24
5305-00-951-2437	23	5
5305-00-958-0605	7	4
5305-00-958-5258	12	13
5305-00-958-5259	12	30
5305-00-958-9428	16	8
5310-00-959-1488	10	13
2530-00-967-6278	6	1
5310-00-982-6809	19	3
5305-00-984-5681	20	31
5305-00-984-6191	1	24
5305-00-984-6210	2	6
	4	7
5305-00-984-7350	1	16
5305-00-988-1723	22	4
5305-00-988-1728	22	4
5340-00-993-6207	11	13
5310-00-998-0608	18	7
5306-01-009-7117	12	26
5340-01-031-6268	21	6
	21	19
5340-01-031-6310	21	5
	21	18
4730-01-043-3055	11	21
5330-01-044-1941	11	26
4030-01-044-6040	15	8

STOCK NUMBER	FIG.	ITEM
5310-01-045-3709	12	31
2510-01-050-7136	10	23
2530-01-050-7698	10	18
5310-01-050-8832	10	17
2530-01-050-8929	10	34
2540-01-051-6354	10	5
2540-01-051-6355	10	3
3120-01-052-1151	10	4
5365-01-053-6898	10	8
4730-01-053-8468	10	12
5360-01-054-2281	10	19
5315-01-056-6023	20	17
2540-01-060-7031	10	15
5340-01-068-6693	8	16
5340-01-069-6705	8	7
5340-01-070-4475	7	3
2530-01-070-9494	8	13
5340-01-071-2098	8	4
2530-01-074-7001	8	12
5310-01-074-9323	8	9
5315-01-079-1494	8	2
1005-01-083-9297	8	18
5360-01-088-0552	8	17
2640-01-098-2029	13	9
7690-01-111-2265	23	4
5315-01-112-8102	15	9
2510-01-122-1405	20	16
	20	45
2540-01-126-7870	20	49
		20
5306-01-130-4240	12	26
5340-01-132-1175	4	12
2530-01-138-9385	5	1
5310-01-139-2070	7	8
9520-01-139-9677	10	20
3040-01-139-9900	12	11
5330-01-140-8231	12	8
5305-01-140-9118	1	5
	15	5
	20	19
2510-01-144-8847	18	10
3040-01-145-0382	12	28
5310-01-146-9635	12	6
5315-01-147-0855	17	9
9905-01-147-5836	23	1
9905-01-147-5837	23	2
5306-01-147-8225	18	12
5340-01-147-8290	18	11
2610-01-148-1635	14	1
2530-01-148-7074	12	12
5310-01-149-0868	12	14
3040-01-149-5061	12	2
5340-01-151-4202	12	4

STOCK NUMBER	FIG.	ITEM
2540-01-154-3892	16	10
2530-01-154-6952	12	1
4010-01-158-6795	10	29
2530-01-160-0850	9	3
3110-01-165-4860	12	7
6150-01-167-1827	2	1
2530-01-167-1999	10	22
5340-01-168-1534	21	2
	21	15
2530-01-168-7906	6	1
5975-01-170-3480	4	16
4030-01-171-8254	20	15
	20	44
2590-01-179-9080	24	1
5340-01-180-8610	24	3
5340-01-195-5919	24	4
5310-01-198-7585	13	8
2530-01-216-9259	8	10
2530-01-227-6262	8	33
5306-01-237-6844	12	10
2530-01-254-6538	8	30
2530-01-254-6539	8	33
6220-01-284-2709	1	9
2530-01-287-6869	8	1
6220-01-293-2627	1	7
6220-01-297-3217	1	7
2640-01-302-1388	14	3
4720-01-306-6294	11	10
3040-01-317-1579	20	9
	20	38
3040-01-317-1580	20	13
	20	42
2540-01-325-7719	21	1
2610-01-333-7632	14	4
2640-01-334-9453	13	5
2640-01-335-4583	13	11
5331-01-335-8878	13	4
2530-01-336-3127	13	7
2530-01-336-5740	13	2
5306-01-336-7175	13	3
2530-01-338-2730	13	6
4730-01-346-1063	13	12
5331-01-346-3806	13	13
2530-01-348-2989	10	1
2510-01-353-3116	18	10
6220-01-359-2870	1	2
2540-01-369-7471	16	6
4030-01-371-9331	15	8
6220-01-372-3883	1	1
5340-01-385-9852	10	30
5340-01-386-3974	17	7
2590-01-388-0958	17	10
2590-01-388-2416	10	37

STOCK NUMBER	FIG.	ITEM
5310-01-388-4494	21	14
2510-01-388-6424	20	28
	20	52
5340-01-388-9098	20	6
2510-01-389-0410	20	5
	20	36
2510-01-389-0414	20	7
	20	37
2530-01-390-4684	5	2
5340-01-418-9889	10	36
2530-01-429-8346	6	1
2530-01-430-7250	8	12
2540-01-463-9193	21	1
2510-01-464-6923	20	28

STOCK NUMBER	FIG.	ITEM
5340-01-467-1461	20	26
9905-01-470-9026	23	3
2510-01-480-7319	16	12
2510-01-492-0298	20	12
5306-01-495-0788	20	27
9905-01-495-1373	23	1
5310-01-498-0322	12	5
9905-01-502-4575	23	3
2530-01-534-1110	12	15
6150-01-543-4426	2	1
2530-01-547-4956	8	19
6210-01-550-0490	1	12
5340-01-570-9063	10	10

END OF WORK PACKAGE

FIELD MAINTENANCE
PART NUMBER INDEX

PART NUMBER	FIG.	ITEM
+MS35338-46	8	5
A-A-52611-2-1-TR600HP	14	3
A-A-52611-2-2-TR501	14	3
A-A-52611-4-1-TR-VC-2	14	8
A14047	16	22
A52427-L-0.750	12	31
A52427-R-0.750	12	31
A52463-2-13	1	10
	1	21
AA52428-1	22	1
AA52428-2	22	1
AA52463-A04	1	8
	1	20
	1	35
AA52463-A05	1	11
AA52463-A08	1	8
	1	20
	1	35
AA52463-A09	1	11
AA55629-65	20	1
AA59649-267	12	9
AA59649-304	12	23
AA59649-410	12	27
AEA9630A	10	32
AN316-16R	12	5
AN525-416R20	20	4
AS15001-1	18	3
	24	10
ASTM F104	BULK	2
B1821BH025C100N	11	19
B1821BH025C225N	21	8
B1821BH025F063N	11	12
B1821BH025F225N	21	11
B1821BH031C050N	9	5
B1821BH038C075D	20	48
B1821BH038C088N	1	5
	15	5
	20	19
B1821BH038C125N	15	1
	20	29
	20	53
B1821BH038F075N	4	14
B1821BH038F100N	8	3
B1821BH038F125N	15	12
	24	6
B1821BH038F138N	15	12
B1821BH038F250N	18	13
B1821BH044C125N	12	16
B1821BH044C138N	16	7
B1821BH044F138N	16	7
B1821BH044F200N	10	25
B1821BH044F350N	10	7
B1821BH050F113N	10	26
B1821BH050F175N	16	20
	17	3
B1821BH050F500N	16	2
B1821BH075C350N	15	9
B1821BH075F375N	16	17
	17	2
B1821BH075F600N	16	8
BMS7388452-2	12	15
BSE10918081	8	19
CB1216-16	18	5
F11395B	8	31
F12300	10	21
FC602	10	9
J20R1 CLASS C	10	33
LH-FC-11393-A	8	30
LT286	14	2
M3520-B80B01G	BULK	4
M45193/1-10CG5C	16	4
M45913/1-10FG5C	19	3
	24	7
M45913/1-4CG5C	21	10
M45913/1-4FS3	11	11
M45913/1-6CG5C	15	4
	20	18
	20	47
M45913/1-7CG5C	16	11
M45913/1-7FG5C	10	14
	16	11
M45913/2-12FG5C	16	23
	17	1
M45913/2-6FG5C	10	13
MS122031	2	5
MS16625-1387	12	24
MS17829-6F	15	10
MS20392-7C125	20	17
MS20392-7C27	24	11
MS21042-5	7	1
MS21042-6	7	9
MS21044-N8	10	2
	16	1
MS21044N10	19	3
MS21044N8	18	9

PART NUMBER	FIG.	ITEM
MS21045-8	18	9
MS21083-C7	10	16
MS21245-8	13	14
MS21318-35	23	5
MS21333-2	11	8
MS21333-37	4	9
MS21333-43	4	17
MS21333-99	11	13
MS24629-45	11	9
MS24629-48	11	15
MS24665-353	20	11
	20	41
	24	12
MS24665-355	15	7
MS24665-357	18	1
MS24665-425	12	3
MS24665-436	12	3
MS24665-497	16	15
MS24665-633	18	1
MS27142-2	2	9
MS27144-1	2	14
MS27183-10	11	20
	20	3
MS27183-14	15	3
MS27183-18	18	8
	20	25
MS3367-1-9	4	5
MS35190-317	12	13
MS35190-318	12	30
MS35191-308	1	16
MS35206-242	1	19
MS35206-243	1	24
MS35206-263	2	6
	4	7
MS35206-279	22	4
MS35206-287	22	4
MS35206-301	20	31
MS35207-298	7	4
MS35333-42	8	26
MS35335-34	9	4
MS35338-42	1	18
MS35338-43	2	5
	4	8
MS35338-44	11	25
	20	2
	22	3
MS35338-45	7	11
MS35338-46	1	4
	1	15
	4	13
MS35338-47	12	17
MS35338-48	10	27
	20	24

PART NUMBER	FIG.	ITEM
MS35489-46	4	6
MS35649-202	2	3
	4	10
MS35650-3252	20	8
MS35674-28	17	6
MS35690-404	22	2
MS35691-13	18	15
MS35692-61	18	7
MS35751-15	21	13
MS35751-70	20	22
	20	51
MS45904-64	4	2
MS45913/2-12CG5C	15	7
MS51302-1	1	25
MS51329-1	1	13
MS51330-1	1	13
MS51412-25	21	9
	21	12
MS51473-01	21	14
MS51861-47	4	4
MS51922-61	16	13
MS51949-1	12	26
MS51949-2	12	26
MS51959-46	1	34
MS51967-2	7	10
	22	2
MS51968-14	10	28
	20	23
MS51968-8	8	6
	8	25
	24	2
MS51975-2	10	24
MS53047-1	1	14
MS90725-162	16	5
MS90726-29	1	28
MS90726-41	7	6
MS90726-67	7	5
MS90726-99	10	6
NAS1455-2-14C	BULK	1
RRC271-8	17	8
SM14035374-1	12	1
ZZ-I-550	14	6
00044	12	25
016128600	8	20
07426	1	12
100-AA	13	10
	14	7
10383	16	18
10511558	1	30
10703	10	22
10910174-3	15	3
10910691	23	6
10910692	23	1

PART NUMBER	FIG.	ITEM
10910697	16	6
10910698	16	12
10911050	8	27
10911059	8	33
10911060	8	33
10911062	8	30
10911066	8	28
10911074	8	22
10911075	8	22
10911113	8	32
10916389	24	8
10919707	5	3
10924576	4	16
10926073	7	7
10926075	7	2
10926094	7	8
10943231	BULK	3
10944399	24	4
10944400	24	1
10944402	24	3
110357	11	3
	11	6
	11	18
	11	24
11602356-2	17	9
11625496	11	21
11625497	11	26
11639519-2	1	3
11652180	2	1
11652180-2	2	1
11675013	10	1
11675105	16	10
11686100	11	1
11686100-56.5	11	2
11686101	6	1
11686102	11	5
11686102-1X	11	7
11686103-1	11	22
11686103-1-1X	11	23
11686103-2	11	16
11686103-2-1X	11	17
11686257	8	13
11686262-1	8	7
11686262-2	8	7
11686267-1	9	2
11686267-2	9	2
11686270	8	11
11686271	8	18
11686272	8	15
11686273	8	2
11686274	8	17
11686275	8	16
11686276	8	4

PART NUMBER	FIG.	ITEM
11686277	9	1
11686279	8	14
11686280	8	8
11686281	8	9
11686293	9	3
11838714	8	10
12296386	10	29
12296614	23	1
12296615	23	2
12302516	23	4
12313006	5	1
12313010	12	11
12313012	12	12
12313016	18	11
12313024	12	6
12313027	12	8
12313028	18	12
12313029	18	10
12313042	12	4
12313045	12	7
12313047	12	14
12313048	12	2
12314088	10	20
12331722	10	30
12331725-2	10	37
12339501	13	8
12342633	13	4
12342634	13	11
12342638	13	5
12342639	13	6
12342640	13	7
12342641	13	1
12342642	13	2
12342758	13	3
12342793	13	12
12342794	13	13
12354199	11	10
12354223	12	10
12354224	11	1
12354224-1	11	2
12354225	11	5
12354225-1	11	7
12354239	12	29
12354240	18	10
12355838	15	8
12356009	10	15
12356017	10	17
12356019	10	34
12356021	10	8
12356022	10	23
12360850-1	1	9
12360870-1	1	7
12360870-2	1	7

PART NUMBER	FIG.	ITEM
12362746	10	10
12362791	5	2
12362795	11	16
12362795-1	11	17
12362796	11	22
12362796-1	11	23
12362799	23	1
12362800	23	3
12375837	1	1
12375838	1	6
12375841	1	2
12406440-1	20	26
12436703	20	27
12436705	17	10
12436756	23	3
12436764	20	28
	20	52
12436764-1	20	28
12436772	20	5
	20	36
12436773	20	7
	20	37
12440461	20	37
12440462	20	14
	20	43
12440463	20	12
12441016	20	6
12441068	23	3
12441073	17	7
12441082-1	21	7
12441093	12	5
12448035	8	12
12448059	8	12
12504904	14	1
126853	17	5
126861	17	4
126945	10	36
143449	11	4
15641501	6	1
15785800	6	1
1682	1	10
1683	1	21
171591	2	6
1745	10	4
1804	10	18
1808-1	10	3
1828	10	19
1829	10	5
20-14-5	24	5
21-R-162	21	4
	21	17
	BULK	5
2477HX	4	1

PART NUMBER	FIG.	ITEM
3043T11	7	12
425335	8	23
426711	8	24
4485900042	8	1
501437	21	3
	21	16
5160323	10	11
5599887	12	28
572929	2	12
5942528	1	32
6167100.1	14	5
627-100-GOVT	13	9
7064501	20	35
7320658	1	22
7328241	20	15
	20	44
7336030	4	12
7339354	16	19
7339359	16	14
7339360	16	3
7339365	15	2
7339366	20	21
	20	50
7339367	15	6
7339368	15	8
7339369	15	9
7339395	20	17
	20	46
7339401	18	14
7339402	12	18
7339403	12	19
7339404	18	12
7339405	15	11
7339406	15	11
7339407	15	13
7339408	18	4
7339409	18	6
7339426	20	54
7339430	20	32
7339431	20	34
7339432	20	33
7339434	20	9
	20	38
7339435	20	13
	20	42
7339438	20	10
	20	40
7339458	16	9
7339463	18	10
7339464	19	4
7339465	19	2
7339466	19	1
7339474	16	6

PART NUMBER	FIG.	ITEM
7339475	16	12
7339489	15	6
7339497	16	21
7339505	20	39
7339506	20	30
7339510	20	16
	20	45
7348982	12	20
7349223	12	21
7373354	10	38
7410199	18	2
7410218	1	27
7411019	8	29
7411028	16	16
7414702	12	22
743-123-154	14	4
7526018	1	23
7526020	1	23
7720853-1	2	13
7735289	11	14
7979250	4	3
7979452	21	6
	21	19
7979453	21	5
	21	18
7979691	10	39
8017164	8	21
81-000108	7	3
8330140	4	19
8335233	1	29
8338561	2	15

PART NUMBER	FIG.	ITEM
8338562	2	16
8338564	2	17
8338566	2	10
8338567	2	11
8347212	2	2
8347213	2	4
	2	7
8365426	10	31
8378661	1	17
8382966-1	21	1
8382966-2	21	1
8382970	20	49
		20
8382973	4	11
8382975	18	11
8681932	24	13
8681933	24	14
8681937	24	9
8710494	21	2
	21	15
8722819	2	8
8722865	3	1
8722870	2	2
	4	15
8722943	2	2
8741646	1	33
8741650	1	26
8741651	1	31
8762000	10	12
95053070	4	18
9B1545	10	35

END OF WORK PACKAGE

CHAPTER 9

SUPPORTING INFORMATION

OPERATOR MAINTENANCE
REFERENCES

SCOPE

This work package lists all forms, pamphlets, field manuals, technical manuals and miscellaneous publications referenced in this manual. Indexes should be consulted frequently for latest changes or revisions to references given in this work package and for new information relating to material covered in this technical manual.

FORMS

DA Form 2028	Recommended Changes to Publications and Blank Forms
DA Form 2401	Organization Control Record for Equipment
DA Form 2404	Equipment Inspection and Maintenance Worksheet
DA Form 2407	Maintenance Request
DA Form 2408	Equipment Log Assembly (Records)
DA Form 2408-9	Equipment Control Record
DA Form 3328-1	Serial/Registration Number Record
DA Form 5988-E	Equipment Inspection Maintenance Worksheet (EGA)
DA Form 5990-E	Maintenance Request (EGA)
DD Form 314	Preventive Maintenance Schedule and Record
DD Form 1397	Processing and Deprocessing Record for Shipment, Storage and Issue of Vehicles and Spare Engines
SF Form 364	Report of Discrepancy (ROD)
SF Form 368	Product Quality Deficiency Report

FIELD MANUALS

ATTP 3-34.39	Camouflage, Concealment, and Decoys {MCRP 3-17.6A}
FM 3-11.3	Multiservice Tactics, Techniques, and Procedures for Chemical, Biological, and Nuclear Contamination Avoidance {MCWP 3-37.2A, NTTP 3-11.25, AFTTP (I) 3-2.56} (This Item is Included on EM 0205)
FM 3-11.4	Multiservice Tactics, Techniques, and Procedures for Nuclear, Biological and Chemical (NBC) Protection {MCWP 3-37.2; NTTP 3-11.27; AFTTP (I) 3-2.46} (This Item is Included on EM 0205)
FM 3-11.5	Multiservice Tactics, Techniques, and Procedures for Chemical, Biological, and Nuclear Decontamination {MCWP 3-37.3; NTTP 3-11.26; AFTTP (I) 3-2.60} (This Item is Included on EM 0205)
FM 3-97.6	Mountain Operations (This Item is Included on EM 0205)

FIELD MANUALS - Continued

FM 4-25.11	First Aid {NTRP 4-02.1.1; AFMAN 44-163(I); MCRP 3-02G} (This Item is Included on EM 0205)
FM 9-207	Operation and Maintenance of Ordnance Materiel in Cold Weather {To 36-1-40} (This Item is Included on EM 0205)
FM 31-70	Basic Cold Weather Manual (Reprinted W/Basic Incl C1) (This Item is Included on EM 0205)
FM 31-71	Northern Operations (This Item is Included on EM 0205)
FM 55-30	Army Motor Transport Units and Operations (Reprinted W/Basic Incl C1) (This Item is Included on EM 0205)
FM 90-3	Desert Operations {FMFM 7-27} (This Item is Included on EM 0205)

TECHNICAL MANUALS

TM 9-214	Inspection, Care, and Maintenance of Antifriction Bearings
TM 9-2610-200-14	Operators, Unit, Direct Support, and General Support Maintenance Manual for Care, Maintenance, Repair and Inspection of Pneumatic Tires and Inner Tubes (This Item is Included on EM 0178)
TM 43-0139	Painting Instructions for Army Materiel (This Item is Included on EM 0178)
TM 55-2200-001-12	Transportability Guidance For Application Of Blocking, Bracing And Tiedown Materials For Rail Transport (Reprinted W/Basic Incl C1-4) (This Item is Included on EM 0130)
TM 750-244-6	Procedures for Destruction of Tank-Automotive Equipment to Prevent Enemy Use (US Army Tank-Automotive Command)

PAMPHLETS AND BULLETINS

DA PAM 25-30	Consolidated Index of Army Publications and Blank Forms
DA PAM 710-2-1	Using Unit Supply System (Manual Procedures) (Standalone Pub)
DA PAM 750-8	The Army Maintenance Management System (TAMMS) Users Manual
SB 740-98-1	Storage and Serviceability Standard: Tracked Vehicles, Wheeled Vehicles, And Component Parts (IL)
TB 9-2300-247-40	Tactical Wheeled Vehicles: Repair Of Frames (This Item is Included on EM 0178)
TB 43-0209	Color, Marking and Camouflage Painting Of Military Vehicles, Construction Equipment, And Materials Handling Equipment (Reprinted W/Basic Incl C1) (This Item is Included on EM 0178)

PAMPHLETS AND BULLETINS - Continued

TB 43-0239	Maintenance In The Desert (This Item is Included on EM 0178)

OTHER PUBLICATIONS

AR 200-1	Environmental Protection And Enhancement
AR 700-138	Army Logistics Readiness and Sustainability
AR 702-7	Product Quality Deficiency Report Program {DLAR 4155.24; SECNAVINST 4855.5A; AFR 74-6}
CTA 8-100	Army Medical Department Expendable/Durable Items
CTA 50-970	Expendable/Durable Items (Except Medical, Class V, Repair Parts, and Heraldic Items)
TC 21-305-20	Manual for the Wheeled Vehicle Operator {AFMAN 24-306 (1)}

END OF WORK PACKAGE

MAINTENANCE ALLOCATION CHART (MAC) INTRODUCTION

THE ARMY MAINTENANCE SYSTEM MAC

This introduction provides a general explanation of all maintenance and repair functions authorized at the two maintenance levels under the Two-Level Maintenance System concept.

This MAC (immediately following the introduction) designates overall authority and responsibility for the performance of maintenance functions on the identified end item or component. The application of the maintenance functions to the end item or component shall be consistent with the capacities and capabilities of the designated maintenance levels, which are shown on the MAC in column (4) as:

Field – includes two subcolumns, Crew (C) and Maintainer (F).
Sustainment – includes two subcolumns, Below Depot (H) and Depot (D).

The maintenance to be performed at field and sustainment levels is described as follows:

1. Crew maintenance. The responsibility of a using organization to perform maintenance on its assigned equipment. It normally consists of inspecting, servicing, lubricating, adjusting, and replacing parts, minor assemblies, and subassemblies. The replace function for this level of maintenance is indicated by the letter "C" in the third position of the SMR code. A "C" appearing in the fourth position of the SMR code indicates complete repair is possible at the crew maintenance level.
2. Maintainer maintenance. Maintenance accomplished on a component, accessory, assembly, subassembly, plug-in unit, or other portion either on the system or after it is removed. The replace function for this level of maintenance is indicated by the letter "F" appearing in the third position of the SMR code. An "F" appearing in the fourth position of the SMR code indicates complete repair is possible at the field maintenance level. Items are returned to the user after maintenance is performed at this level.
3. Below depot sustainment. Maintenance accomplished on a component, accessory, assembly, subassembly, plug-in unit, or other portion either on the system or after it is removed. The replace function for this level of maintenance is indicated by the letter "H" appearing in the third position of the SMR code. An "H" appearing in the fourth position of the SMR code indicates complete repair is possible at the below depot sustainment maintenance level. Items are returned to the supply system after maintenance is performed at this level.
4. Depot sustainment . Maintenance accomplished on a component, accessory, assembly, subassembly, plug-in unit, or other portion either on the system or after it is removed. The replace function for this level of maintenance is indicated by the letter "D" or "K" appearing in the third position of the SMR code. Depot sustainment maintenance can be performed by either depot personnel or contractor personnel. A "D" or "K" appearing in the fourth position of the SMR code indicates complete repair is possible at the depot sustainment maintenance level. Items are returned to the supply systems after maintenance is performed at this level.

The tools and test equipment requirements table (immediately following the MAC) lists the tools and test equipment (both special tools and common tool sets) required for each maintenance function as referenced from the MAC.

The remarks table (immediately following the tools and test equipment requirements) contains supplemental instructions and explanatory notes for a particular maintenance function.

MAINTENANCE FUNCTIONS

Maintenance functions are limited to and defined as follows:

1. Inspect. To determine the serviceability of an item by comparing its physical, mechanical, and/or electrical characteristics with established standards through examination (e.g., by sight, sound, or feel). This includes scheduled inspection and gaugings and evaluation of cannon tubes.
2. Test. To verify serviceability by measuring the mechanical, pneumatic, hydraulic, or electrical characteristics of an item and comparing those characteristics with prescribed standards on a scheduled basis, i.e., load testing of lift devices and hydrostatic testing of pressure hoses.

THE ARMY MAINTENANCE SYSTEM MAC - Continued

3. Service. Operations required periodically to keep an item in proper operating condition; e.g., to clean (includes decontaminate, when required), to preserve, to drain, to paint, or to replenish fuel, lubricants, chemical fluids, or gases. This includes scheduled exercising and purging of recoil mechanisms. The following are examples of service functions:
    a. Unpack. To remove from packing box for service or when required for the performance of maintenance operations.
    b. Repack. To return item to packing box after service and other maintenance operations.
    c. Clean. To rid the item of contamination.
    d. Touch up. To spot paint scratched or blistered surfaces.
    e. Mark. To restore obliterated identification.
4. Adjust. To maintain or regulate, within prescribed limits, by bringing into proper position, or by setting the operating characteristics to specified parameters.
5. Align. To adjust specified variable elements of an item to bring about optimum or desired performance.
6. Calibrate. To determine and cause corrections to be made or to be adjusted on instruments of test, measuring, and diagnostic equipment used in precision measurement. Consists of comparisons of two instruments, one of which is a certified standard of known accuracy, to detect and adjust any discrepancy in the accuracy of the instrument being compared.
7. Remove/Install. To remove and install the same item when required to perform service or other maintenance functions. Install may be the act of emplacing, seating, or fixing into position a spare, repair part, or module (component or assembly) in a manner to allow the proper functioning of an equipment or system.
8. Paint (ammunition only). To prepare and spray color coats of paint so that the ammunition can be identified and protected. The color indicating primary use is applied, preferably, to the entire exterior surface as the background color of the item. Other markings are to be repainted as original so as to retain proper ammunition identification.
9. Replace. To remove an unserviceable item and install a serviceable counterpart in its place. "Replace" is authorized by the MAC and assigned maintenance level is shown as the third position code of the Source, Maintenance and Recoverability (SMR) code.
10. Repair. The application of maintenance services, including fault location/troubleshooting, removal/ installation, disassembly/assembly procedures and maintenance actions to identify troubles and restore serviceability to an item by correcting specific damage, fault, malfunction, or failure in a part, subassembly, module (component or assembly), end item, or system.

NOTE

The following definitions are applicable to the "repair" maintenance function:
Services. Inspect, test, service, adjust, align, calibrate, and/ or replace.
Fault location/troubleshooting. The process of investigating and detecting the cause of equipment malfunctioning; the act of isolating a fault within a system or Unit Under Test (UUT).
Disassembly/assembly. The step-by-step breakdown (taking apart) of a spare/ functional group coded item to the level of its least component, that is assigned an SMR code for the level of maintenance under consideration (i.e., identified as maintenance significant).
Actions. Welding, grinding, riveting, straightening, facing, machining, and/or resurfacing.

11. Overhaul. That maintenance effort (service/action) prescribed to restore an item to a completely serviceable/ operational condition as required by maintenance standards in appropriate technical publications. Overhaul is normally the highest degree of maintenance performed by the Army. Overhaul does not normally return an item to like new condition.
12. Rebuild. Consists of those services/actions necessary for the restoration of unserviceable equipment to a like new condition in accordance with original manufacturing standards. Rebuild is the highest degree of material maintenance applied to Army equipment. The rebuild operation includes the act of returning to zero those age measurements (e.g., hours/miles) considered in classifying Army equipment/components.

THE ARMY MAINTENANCE SYSTEM MAC - Continued

EXPLANATION OF COLUMNS IN THE MAC

Column (1) Group Number. Column (1) lists Functional Group Code (FGC) numbers, the purpose of which is to identify maintenance significant components, assemblies, subassemblies, and modules with the Next Higher Assembly (NHA).

Column (2) Component/Assembly. Column (2) contains the item names of components, assemblies, subassemblies, and modules for which maintenance is authorized.

Column (3) Maintenance Function. Column (3) lists the functions to be performed on the item listed in column (2). (For a detailed explanation of these functions refer to "Maintenance Functions" outlined above).

Column (4) Maintenance Level. Column (4) specifies each level of maintenance authorized to perform each function listed in column (3), by indicating work time required (expressed as manhours in whole hours or decimals) in the appropriate subcolumn. This work time figure represents the active time required to perform that maintenance function at the indicated level of maintenance. If the number or complexity of the tasks within the listed maintenance function varies at different maintenance levels, appropriate work time figures are to be shown for each level. The work time figure represents the average time required to restore an item (assembly, subassembly, component, module, end item, or system) to a serviceable condition under typical field operating conditions. This time includes preparation time (including any necessary disassembly/assembly time), troubleshooting/fault location time, and quality assurance time in addition to the time required to perform the specific tasks identified for the maintenance functions authorized in the MAC. The symbol designations for the various maintenance levels are as follows:

Field:

C Crew maintenance
F Maintainer maintenance

Sustainment:

L Specialized Repair Activity (SRA)
H Below depot maintenance
D Depot maintenance

NOTE

The "L" maintenance level is not included in column (4) of the MAC. Functions to this level of maintenance are identified by work time figure in the "H" column of column (4), and an associated reference code is used in the REMARKS column (6). This code is keyed to the remarks and the SRA complete repair application is explained there.

Column (5) Tools and Equipment Reference Code. Column (5) specifies, by code, those common tool sets (not individual tools), common Test, Measurement and Diagnostic Equipment (TMDE), and special tools, special TMDE and special support equipment required to perform the designated function. Codes are keyed to the entries in the tools and test equipment table.

Column (6) Remarks Code. When applicable, this column contains a letter code, in alphabetical order, which is keyed to the remarks table entries.

EXPLANATION OF COLUMNS IN THE TOOLS AND TEST EQUIPMENT REQUIREMENTS

Column (1) - Tool or Test Equipment Reference Code. The tool or test equipment reference code correlates with a code used in column (5) of the MAC.

Column (2) - Maintenance Level. The lowest level of maintenance authorized to use the tool or test equipment.

Column (3) - Nomenclature. Name or identification of the tool or test equipment.

Column (4) - National Stock Number (NSN). The NSN of the tool or test equipment.

Column (5) - Tool Number. The manufacturer's part number.

THE ARMY MAINTENANCE SYSTEM MAC - Continued

EXPLANATION OF COLUMNS IN THE REMARKS

Column (1) - Remarks Code. The code recorded in column (6) of the MAC.

Column (2) - Remarks. This column lists information pertinent to the maintenance function being performed as indicated in the MAC.

END OF WORK PACKAGE

OPERATOR MAINTENANCE
MAINTENANCE ALLOCATION CHART (MAC)

Table 1. Maintenance Allocation Chart

(1) GROUP NUMBER	(2) COMPONENT/ ASSEMBLY	(3) MAINTENANCE FUNCTION	(4) MAINTENANCE LEVEL				(5) TOOLS AND EQUIPMENT REFERENCE CODE	(6) REMARKS CODE
			FIELD		SUSTAINMENT			
			CREW	MAINTAINER	BELOW DEPOT	DEPOT		
			C	F	H	D		
00	TRAILERS							
0000-01	PMCS (BEFORE)	Inspect	1.0					
		Service	1.0				1	
0000-02	PMCS (DURING)	Inspect	0.3					
0000-03	PMCS (WEEKLY)	Inspect	0.2					
0000-04	PMCS (MONTHLY)	Inspect	0.5					
0000-05	PMCS (SEMI-ANNUALLY)	Service		2.0			1	
0000-06	PMCS - ANNUALLY	Service		8.0			1, 2, 3	B
06	ELECTRICAL SYSTEM							
0609-00	Lights	Replace		1.0			1	A
0609-01	Lamps or LED'S	Replace		0.5			1	
0613-00	Chassis Wiring Harness	Replace		1.0			1	
0613-01	Cable, Intervehicular	Replace		1.0			1	
11	AXLE							

Table 1. Maintenance Allocation Chart - Continued

(1) GROUP NUMBER	(2) COMPONENT/ ASSEMBLY	(3) MAINTENANCE FUNCTION	(4) MAINTENANCE LEVEL				(5) TOOLS AND EQUIPMENT REFERENCE CODE	(6) REMARKS CODE
			FIELD		SUSTAINMENT			
			CREW	MAINTAINER	BELOW DEPOT	DEPOT		
			C	F	H	D		
1100-00	Rear Axle Assembly	Replace		5.5			1, 2, 3	B
12	BRAKES							
1201-00	Handbrake Levers and Linkage	Adjust		0.5			1, 2, 3	B
		Replace		2.0			1, 2, 3	B
1202-00	Service Brakes Assemblies	Adjust		1.0			1, 2, 3	B
		Replace		2.0			1, 2, 3	B
		Repair		2.0			1, 2, 3	B
1204-00	Hydraulic Brake Cylinder Assembly, Wheel	Replace		1.5			1, 2, 3	B
1204-01	Actuator Assembly, Brake	Replace		2.5			1, 2, 3	B
		Repair		3.0			1, 2, 3	B
1204-02	Cylinder Assembly, Master	Replace		1.5			1, 2, 3	B
1204-03	Brake Lines, Hydraulic	Replace		1.5			1, 2, 3	B
13	WHEEL ASSEMBLY							
1311-00	Brake Drum	Replace		2.0			1, 2, 3	B

Table 1. Maintenance Allocation Chart - Continued

(1) GROUP NUMBER	(2) COMPONENT/ ASSEMBLY	(3) MAINTENANCE FUNCTION	(4) MAINTENANCE LEVEL				(5) TOOLS AND EQUIPMENT REFERENCE CODE	(6) REMARKS CODE
			FIELD		SUSTAINMENT			
			CREW	MAINTAINER	BELOW DEPOT	DEPOT		
			C	F	H	D		
1311-01	Hub Bearings, Wheel	Adjust		0.5			1, 2, 3	B
		Replace		0.5			1, 2, 3	B
1311-02	Wheel Assembly	Replace	1.0					E
1313-00	Tire						1, 2, 3	B
							1, 2, 3	B, C
1313-01	Tube, Inner						1, 2, 3	B
15	FRAME							
1501-00	Frame Assembly						1, 2, 3	B, D
1503-00	Pintles and Towing Attachments, Drawbar	Replace		2.0			1, 2, 3	B
1503-01	Bracket Assembly, Drawbar	Replace		2.0			1, 2, 3	B
1503-02	Chains, Safety	Replace		0.5			1, 2, 3	B
1507-00	Landing Leg, Leveling Jacks Leg, Support, Front, (Adjustable)	Replace		2.0			1, 2, 3	B
16	SUSPENSION							
1601-00	Springs	Replace		2.5			1, 2, 3	B
1604-00	Absorber, Shock	Replace		1.0			1, 2, 3	B

Table 1. Maintenance Allocation Chart - Continued

(1) GROUP NUMBER	(2) COMPONENT/ ASSEMBLY	(3) MAINTENANCE FUNCTION	(4) MAINTENANCE LEVEL				(5) TOOLS AND EQUIPMENT REFERENCE CODE	(6) REMARKS CODE
			FIELD		SUSTAINMENT			
			CREW	MAINTAINER	BELOW DEPOT	DEPOT		
			C	F	H	D		
18	BODY							
1810-00	Cargo Body	Replace		8.0			1, 2, 3	B
	Tailgate	Replace		.7			1	
	U-Bolts	Replace		.5			1	
22	ACCESSORY ITEMS							
2201-00	Cover Assembly, Canvas	Replace		0.5			1	
2202-00	Reflectors	Replace		0.5			1	
2210-00	Data Plate, Identification	Replace		0.5			1, 2, 3	B
33	SPECIAL PURPOSE KITS							
3307-00	Stabilizer Kit, Rear	Replace		1.0			1	
		Repair		0.5			1	

Table 2. Tools and Test Equipment Requirements

TOOL OR TEST EQUIPMENT REF CODE	MAINTENANCE CATEGORY	NOMENCLATURE	NATIONAL/NATO STOCK NUMBER	TOOL NUMBER
1	F	Tool Kit, General Mechanic's	5180-01-483-0249	PD484
2	F	Tool Set, SATS, Base	4940-01-533-1621	SC 4190-95-A81
3	F	Forward Repair System (FRS)	4940-01-553-1621	SC 4940-95-E41

Table 3. Remarks

REMARK CODE	REMARKS
A	Stoplight taillight and composite stoplight taillight repair is limited to lens, preformed packing, and lamp or LED replacement.
B	Tools needed for this task will come from either the SATS or FRS Kit, that is available for use per the units MTOE.
C	Refer to TM 9-2610-200-14 for information on tire and tube repair.
D	Refer to TB 9-2300-247-40 for information on frame repair.
E	When mission permits have Field Maintenance tighten to proper torque.

END OF WORK PACKAGE

OPERATOR MAINTENANCE
COMPONENTS OF END ITEM (COEI)AND BASIC ISSUE ITEMS LISTS (BII)

The M101 and M116 Series trailers currently do not have any assigned components of end item or basic issue items.

END OF WORK PACKAGE

OPERATOR MAINTENANCE
ADDITIONAL AUTHORIZATION LIST (AAL)

INTRODUCTION

Scope

This WP lists additional items you are authorized for support of the M101 and M116 Series trailers.

General

This list identifies items that do not have to accompany the trailers and that do not have to be turned in with them. These items are all authorized to you by Common Table of Allowances (CTA) or Modified Tables of Organization and Equipment (MTOE).

Explanation of Columns in the AAL

Column (1) National Stock Number (NSN). Identifies the stock number of the item to be used for requisitioning purposes.

Column (2) Description, Part Number/(CAGEC). Identifies the Federal item name (in all capital letters) followed by a minimum description when needed. The last line below the description is the part number and the Commercial and Government Entity Code (CAGEC) (in parentheses).

Column (3) Usable On Code. When applicable, gives you a code if the item you need is not the same for different models of equipment. These codes are identified below:

Table 1. Usable On Codes.

Code	Used On
257	M101A1
263	M101A2
TC1	M101A3
646	M116A1
258	M116A2
CT1	M116A3

INTRODUCTION - Continued

Column (4) U/I. Unit of Issue (U/I) indicates the physical measurement or count of the item as issued per the National Stock Number shown in column (1).

Column (5) Qty Recm. indicates the quantity recommended.

Table 2. Additional Authorization List (AAL)

(1) NATIONAL STOCK NUMBER (NSN)	(2) DESCRIPTION, PART NUMBER/ (CAGEC)	(3) USABLE ON CODE	(4) U/I	(5) QTY RECM
2590-01-279-7918	Modification Kit, Vehicular Equipment Components 57K0556 (19207)		EA	1
	MTOE Authorized Items			
5120-00-243-2419	Bar, Socket Wrench Handle 6196147 (19207)		EA	1
5120-00-239-2452	Wrench, Socket 7083293 (19207)		EA	1
5120-01-156-7296	Wrench, Wheel Lug 14009303 (11862)		EA	1

END OF WORK PACKAGE

FIELD MAINTENANCE
EXPENDABLE AND DURABLE ITEMS LIST (EDIL)

INTRODUCTION

Scope

This WP lists expendable/durable supplies and materials you will need to operate and maintain the M101 and M116 Series trailers. This listing is for informational purposes only and is not authority to requisition the listed items. These items are authorized to you by CTA 50-970, Expendable/Durable Items (Except Medical, Class V, Repair Parts, And Heraldic Items) or CTA 8-100, Army Medical Department Expendable/Durable Items.

Explanation of Columns in the Expendable/Durable Items List

There are five columns in Expendable and Durable Items List:
Column (1) - Item Number. This number is assigned to the entry in the listing and is referenced in the "Initial Setup" of maintenance paragraphs or narrative instructions to identify the item (e.g., Use brake fluid (WP 0098, Item 5)

Column (2) - Level. This column identifies the lowest level of maintenance that requires the listed item:
C = Operator,
F = Maintainer.

Column (3) - National Stock Number (NSN). This is the national stock number assigned to the item; use it to request or requisition the item.

Column (4) - Description (CAGEC). This column contains the Federal item name and, if required, a description to identify the item. The last line for each item indicates the commercial and government entity code (CAGEC) in parentheses followed by the part number, if applicable.

Column (5) - U/I Unit of Issue. Indicates the measure used in performing the actual maintenance function. This measure is expressed by a two-character alphabetical abbreviation: BD (bundle), BE (bale), CA (cartridge), CN (can), DR (drum), EA (each), FT (foot), GL (gallon), PG (package), PT (pint), QT (quart), and RO (roll). If the unit of measure differs from the unit of issue, requisition the lowest unit of issue that will satisfy your requirements.

Table 1. Expendable and Durable Items List.

(1) ITEM NO.	(2) LEVEL	(3) NATIONAL STOCK NUMBER (NSN)	(4) ITEM NAME, DESCRIPTION, PART NUMBER/ (CAGEC)	(5) U/I
1	F	9150-01-102-9455	Brake Fluid, Automotive MIL-PRF-46176 (81349)	GL
2	F	9150-01-123-3152	Brake Fluid, Automotive MIL-PRF-46176 (81349)	CN
3	F	9150-01-072-8379	Brake Fluid, Automotive MIL-PRF-46176 (81349)	DR
4	F	7920-00-900-3577	Brush, Wire 3577 (17987)	EA
5	F	7920-00-061-0038	Brush, Scrub 4054000 (15398)	EA
6	F	5350-00-192-5051	Cloth, Abrasive ANSI B74.18 (80204)	PG
7	F	5350-00-174-0985	Cloth, Abrasive ANSI B74.18 (80204)	BD
8	C	7930-00-282-9699	Detergent, General Purpose 7930-00-282-9699 (83421)	GL
9	C	6850-01-472-2723	Degreasing Solvent, MIL-PRF-680 AA59601-2C (58536)	PT
10	F	9150-01-197-7693	Grease, Automotive and Artillery M-10924-B (81349)	CA
11	F	9150-01-197-7690	Grease, Automotive and Artillery M-10924-C (81349)	CN
12	F	9150-01-197-7689	Grease, Automotive and Artillery M-10924-D (81349)	CN
13	F	9150-01-197-7692	Grease, Automotive and Artillery M-10924-E (81349)	CN
14	F	4720-01-014-4915	Hose, Nonmetallic 246115N (06853)	FT
15	F	9150-00-402-4478	Lubricating Oil, Engine MIL-PRF-46167 (81349)	QT
16	F	9150-00-402-2372	Lubricating Oil, Engine MIL-PRF-46167 (81349)	CN
17	F	9150-00-491-7197	Lubricating Oil, Engine MIL-PRF-46167 (81349)	DR
18	F	9150-00-189-6727	Lubricating Oil, Engine M2104-1-10W (81349)	QT
19	F	9150-00-186-6668	Lubricating Oil, Engine M2104-3-10W (81349)	CN
20	F	9150-00-191-2772	Lubricating Oil, Engine M2104-4-10W (81349)	DR

Table 1. Expendable and Durable Items List - Continued.

(1) ITEM NO.	(2) LEVEL	(3) NATIONAL STOCK NUMBER (NSN)	(4) ITEM NAME, DESCRIPTION, PART NUMBER/ (CAGEC)	(5) U/I
21	F	9150-00-186-6681	Lubricating Oil, Engine M2104-1-30W (81349)	QT
22	F	9150-00-188-9858	Lubricating Oil, Engine M2104-3-30W (81349)	CN
23	F	9150-00-189-6729	Lubricating Oil, Engine M2104-4-30W (81349)	DR
24	C	7920-00-205-1711	Rag, Wiping 7920-00-205-1711 (64067)	BE
25	F	8030-00-148-9833	Sealing Compound	BX
26	F	8030-01-025-1692	Sealing Compound	BT
27	F	9905-00-537-8954	Tag, Marker 9905-00-537-8954 (64067)	BD

END OF WORK PACKAGE

FIELD MAINTENANCE
TOOL IDENTIFICATION LIST (TIL)

INTRODUCTION

SCOPE

This work package lists all common tools and supplements and special tools/fixtures needed to maintain the M101 and M116 Series trailers.

Most PM-SKOT products have lifetime warranties and replacement capabilities and are supported world-wide through PM-SKOT. The PM-SKOT implemented a Web-based tool replacement and warranty program in May 2005 for tools authorized in SKO. User may access the online program by first accessing the following website:

http://pmskot.army.mil/SKO Warranty.html

and clicking on the Tool Replacement/Warranty banner.

EXPLANATION OF COLUMNS IN THE TOOL IDENTIFICATION LIST

Column (1) Item No. This number is assigned to the entry in the list and is referenced in the initial setup to identify the item (e.g., Extractor (WP 0090, Item 32).

Column (2) Item Name. This column lists the item by noun nomenclature and other descriptive features (e.g., Gauge, belt tension).

Column (3) National Stock Number (NSN). This is the National Stock Number (NSN) assigned to the item; use it to requisition the item.

Column (4) Part Number/(CAGEC). Indicates the primary number used by the manufacturer (individual, company, firm, corporation, or Government activity) which controls the design and characteristics of the item by means of its engineering drawings, specifications, standards, and inspection requirements to identify an item or range of items. The manufacturer's Commercial and Government Entity Code (CAGEC) is also included.

Column (5) Reference. This column identifies the authorizing supply catalog (SC 9999-01-SKO) or RPSTL for items listed in this work package.

Table 1. Tool Identification List (TIL).

(1) ITEM NO.	(2) ITEM NAME	(3) NATIONAL STOCK NUMBER (NSN)	(4) PART NUMBER /(CAGEC)	(5) REFERENCE
1	Tool Kit, General Mechanic's	5180-01-483-0249	12B470000-1/ (59678)	
2	Wrench, Torque 0 - 300 in-lb	5120-00-247-2536	B107.300/ (05047)	SC 4910-95-A81
3	Wrench, Torque 0 - 175 ft-lb	5120 -01-396-5937	1753LDF/ (08194)	SC 4910-95-A81

END OF WORK PACKAGE

INDEX

INDEX - Continued

INDEX - Continued

INDEX - Continued

RECOMMENDED CHANGES TO PUBLICATIONS AND BLANK FORMS For use of this form, see AR 25-30; the proponent agency is OAASA.	Use Part II *(reverse)* for Repair Parts and Special Tool Lists (RPSTL) and Supply Catalogs/Supply Manuals (SC/SM).	DATE *Date you filled out this form.*
TO *(Forward to proponent of publication or form) (Include ZIP Code)* U.S. Army TACOM Life Cycle Management Command ATTN: AMSTA-LCL-MPP/TECH PUBS 6501 E. 11 Mile Road, Warren, MI 48397-5000	**FROM** *(Activity and location) (Include ZIP Code)* *Your mailing address*	

PART I – ALL PUBLICATIONS (EXCEPT RPSTL AND SC/SM) AND BLANK FORMS

PUBLICATION/FORM NUMBER	DATE	TITLE
TM Number	*Date of the TM*	*Title of the TM*

ITEM	PAGE	PARA-GRAPH	LINE	FIGURE NO.	TABLE	RECOMMENDED CHANGES AND REASON (Exact wording of recommended change must be given)
	0007-3					*Figure 2, Item 9 should show a lockwasher. Currently shows a flat washer.*
	0018-2					*Cleaning and inspection, Step 6, reference to governor support pin (14) is wrong reference. Reference should be change to (12).*

SAMPLE

TYPED NAME, GRADE OR TITLE	TELEPHONE EXCHANGE/AUTOVON, PLUS EXTENSION	SIGNATURE
Your Name	*Your Phone Number*	*Your Signature*

DA FORM 2028, FEB 74 REPLACES DA FORM 2028, 1 DEC 68, WHICH WILL BE USED. APD V4.00

TO *(Forward direct to addressee listed in publication)*	**FROM** *(Activity and location) (Include ZIP Code)*	**DATE**
U.S. Army TACOM Life Cycle Management Command ATTN: AMSTA-LCL-MPP/TECH PUBS 6501 E. 11 Mile Road, Warren, MI 48397-5000	*Your Address*	*Date you filled out this form*

PART II – REPAIR PARTS AND SPECIAL TOOL LISTS AND SUPPLY CATALOGS/SUPPLY MANUALS

PUBLICATION NUMBER	DATE	TITLE
TM Number	*Date of the TM*	*Title of the TM*

PAGE NO.	COLM NO.	LINE NO.	NATIONAL STOCK NUMBER	REFERENCE NO.	FIGURE NO.	ITEM NO.	TOTAL NO. OF MAJOR ITEMS SUPPORTED	RECOMMENDED ACTION

PART III – REMARKS *(Any general remarks, or recommendations, or suggestions for improvement of publications and blank forms. Additional blank sheets may be used if more space is needed.)*

TYPED NAME, GRADE OR TITLE	TELEPHONE EXCHANGE/AUTOVON, PLUS EXTENSION	SIGNATURE
Your Name	*Your Phone Number*	*Your Signature*

APD V4.00

RECOMMENDED CHANGES TO PUBLICATIONS AND BLANK FORMS For use of this form, see AR 25-30; the proponent agency is OAASA	Use Part II *(reverse)* for Repair Parts and Special Tool Lists (RPSTL) and Supply Catalogs/Supply Manuals (SC/SM).	**DATE**
TO *(Forward to proponent of publication or form) (Include ZIP Code)* U.S. Army TACOM Life Cycle Management Command ATTN: AMSTA-LCL-MPP/TECH PUBS 6501 E. 11 Mile Road, Warren, MI 48397-5000	**FROM** *(Activity and location) (Include ZIP Code)*	

PART I – ALL PUBLICATIONS (EXCEPT RPSTL AND SC/SM) AND BLANK FORMS

PUBLICATION/FORM NUMBER	DATE	TITLE
TM 9-2330-202-13&P	30 December 2011	M101 Cargo Trailers and M116 Chassis Trailers

ITEM	PAGE	PARA-GRAPH	LINE	FIGURE NO.	TABLE	RECOMMENDED CHANGES AND REASON

TYPED NAME, GRADE OR TITLE	TELEPHONE EXCHANGE/AUTOVON, PLUS EXTENSION	SIGNATURE

TO *(Forward direct to addressee listed in publication)*	**FROM** *(Activity and location) (Include ZIP Code)*	**DATE**
U.S. Army TACOM Life Cycle Management Command ATTN: AMSTA-LCL-MPP/TECH PUBS 6501 E. 11 Mile Road, Warren, MI 48397-5000		

PART II – REPAIR PARTS AND SPECIAL TOOL LISTS AND SUPPLY CATALOGS/SUPPLY MANUALS

PUBLICATION/FORM NUMBER	DATE	TITLE
TM 9-2330-202-13&P	30 December 2011	M101 Cargo Trailers and M116 Chassis Trailers

PAGE NO.	COLM NO.	LINE NO.	NATIONAL STOCK NUMBER	REFERENCE NO.	FIGURE NO.	ITEM NO.	TOTAL NO. OF MAJOR ITEMS SUPPORTED	RECOMMENDED ACTION

PART III – REMARKS *(Any general remarks, or recommendations, or suggestions for improvement of publications and blank forms. Additional blank sheets may be used if more space is needed.)*

TYPED NAME, GRADE OR TITLE	TELEPHONE EXCHANGE/AUTOVON, PLUS EXTENSION	SIGNATURE

APD V4.00

RECOMMENDED CHANGES TO PUBLICATIONS AND BLANK FORMS For use of this form, see AR 25-30; the proponent agency is OAASA	Use Part II *(reverse)* for Repair Parts and Special Tool Lists (RPSTL) and Supply Catalogs/Supply Manuals (SC/SM).	**DATE**
TO *(Forward to proponent of publication or form) (Include ZIP Code)* U.S. Army TACOM Life Cycle Management Command ATTN: AMSTA-LCL-MPP/TECH PUBS 6501 E. 11 Mile Road, Warren, MI 48397-5000	**FROM** *(Activity and location) (Include ZIP Code)*	

PART I – ALL PUBLICATIONS (EXCEPT RPSTL AND SC/SM) AND BLANK FORMS

PUBLICATION/FORM NUMBER	DATE	TITLE
TM 9-2330-202-13&P	30 December 2011	M101 Cargo Trailers and M116 Chassis Trailers

ITEM	PAGE	PARA-GRAPH	LINE	FIGURE NO.	TABLE	RECOMMENDED CHANGES AND REASON

TYPED NAME, GRADE OR TITLE	TELEPHONE EXCHANGE/AUTOVON, PLUS EXTENSION	SIGNATURE

TO *(Forward direct to addressee listed in publication)*	**FROM** *(Activity and location) (Include ZIP Code)*	**DATE**
U.S. Army TACOM Life Cycle Management Command ATTN: AMSTA-LCL-MPP/TECH PUBS 6501 E. 11 Mile Road, Warren, MI 48397-5000		

PART II – REPAIR PARTS AND SPECIAL TOOL LISTS AND SUPPLY CATALOGS/SUPPLY MANUALS

PUBLICATION/FORM NUMBER	DATE	TITLE
TM 9-2330-202-13&P	30 December 2011	M101 Cargo Trailers and M116 Chassis Trailers

PAGE NO.	COLM NO.	LINE NO.	NATIONAL STOCK NUMBER	REFERENCE NO.	FIGURE NO.	ITEM NO.	TOTAL NO. OF MAJOR ITEMS SUPPORTED	RECOMMENDED ACTION

PART III – REMARKS *(Any general remark, or recommendations, or suggestions for improvement of publications and blank forms. Additional blank sheets may be used if more space is needed.)*

TYPED NAME, GRADE OR TITLE	**TELEPHONE EXCHANGE/AUTOVON, PLUS EXTENSION**	**SIGNATURE**

APD V4.00

RECOMMENDED CHANGES TO PUBLICATIONS AND BLANK FORMS For use of this form, see AR 25-30; the proponent agency is OAASA	Use Part II *(reverse)* for Repair Parts and Special Tool Lists (RPSTL) and Supply Catalogs/Supply Manuals (SC/SM).	**DATE**
TO *(Forward to proponent of publication or form) (Include ZIP Code)* U.S. Army TACOM Life Cycle Management Command ATTN: AMSTA-LCL-MPP/TECH PUBS 6501 E. 11 Mile Road, Warren, MI 48397-5000	**FROM** *(Activity and location) (Include ZIP Code)*	

PART I – ALL PUBLICATIONS (EXCEPT RPSTL AND SC/SM) AND BLANK FORMS

PUBLICATION/FORM NUMBER	DATE	TITLE
TM 9-2330-202-13&P	30 December 2011	M101 Cargo Trailers and M116 Chassis Trailers

ITEM	PAGE	PARA-GRAPH	LINE	FIGURE NO.	TABLE	RECOMMENDED CHANGES AND REASON

TYPED NAME, GRADE OR TITLE	TELEPHONE EXCHANGE/AUTOVON, PLUS EXTENSION	SIGNATURE

TO *(Forward direct to addressee listed in publication)*	**FROM** *(Activity and location) (Include ZIP Code)*	**DATE**
U.S. Army TACOM Life Cycle Management Command ATTN: AMSTA-LCL-MPP/TECH PUBS 6501 E. 11 Mile Road, Warren, MI 48397-5000		

PART II – REPAIR PARTS AND SPECIAL TOOL LISTS AND SUPPLY CATALOGS/SUPPLY MANUALS

PUBLICATION/FORM NUMBER	DATE	TITLE
TM 9-2330-202-13&P	30 December 2011	M101 Cargo Trailers and M116 Chassis Trailers

PAGE NO.	COLM NO.	LINE NO.	NATIONAL STOCK NUMBER	REFERENCE NO.	FIGURE NO.	ITEM NO.	TOTAL NO. OF MAJOR ITEMS SUPPORTED	RECOMMENDED ACTION

PART III – REMARKS *(Any general remarks, recommendations, or suggestions for improvement of publications and blank forms. Additional blank sheets may be used if more space is needed.)*

TYPED NAME, GRADE OR TITLE	**TELEPHONE EXCHANGE/AUTOVON, PLUS EXTENSION**	**SIGNATURE**

APD V4.00

RECOMMENDED CHANGES TO PUBLICATIONS AND BLANK FORMS For use of this form, see AR 25-30; the proponent agency is OAASA	Use Part II *(reverse)* for Repair Parts and Special Tool Lists (RPSTL) and Supply Catalogs/Supply Manuals (SC/SM).	**DATE**
TO *(Forward to proponent of publication or form) (Include ZIP Code)* U.S. Army TACOM Life Cycle Management Command ATTN: AMSTA-LCL-MPP/TECH PUBS 6501 E. 11 Mile Road, Warren, MI 48397-5000	**FROM** *(Activity and location) (Include ZIP Code)*	

PART I – ALL PUBLICATIONS (EXCEPT RPSTL AND SC/SM) AND BLANK FORMS

PUBLICATION/FORM NUMBER	DATE	TITLE
TM 9-2330-202-13&P	30 December 2011	M101 Cargo Trailers and M116 Chassis Trailers

ITEM	PAGE	PARA-GRAPH	LINE	FIGURE NO.	TABLE	RECOMMENDED CHANGES AND REASON

TYPED NAME, GRADE OR TITLE	TELEPHONE EXCHANGE/AUTOVON, PLUS EXTENSION	SIGNATURE

TO *(Forward direct to addressee listed in publication)*	**FROM** *(Activity and location) (Include ZIP Code)*	**DATE**
U.S. Army TACOM Life Cycle Management Command ATTN: AMSTA-LCL-MPP/TECH PUBS 6501 E. 11 Mile Road, Warren, MI 48397-5000		

PART II – REPAIR PARTS AND SPECIAL TOOL LISTS AND SUPPLY CATALOGS/SUPPLY MANUALS

PUBLICATION/FORM NUMBER	DATE	TITLE
TM 9-2330-202-13&P	30 December 2011	M101 Cargo Trailers and M116 Chassis Trailers

PAGE NO.	COLM NO.	LINE NO.	NATIONAL STOCK NUMBER	REFERENCE NO.	FIGURE NO.	ITEM NO.	TOTAL NO. OF MAJOR ITEMS SUPPORTED	RECOMMENDED ACTION

PART III – REMARKS *(Any general remarks, or recommendations, or suggestions for improvement of publications and blank forms. Additional blank sheets may be used if more space is needed.)*

TYPED NAME, GRADE OR TITLE	TELEPHONE EXCHANGE/AUTOVON, PLUS EXTENSION	SIGNATURE

APD V4.00

By Order of the Secretary of the Army:

RAYMOND T. ODIERNO
General, United States Army
Chief of Staff

Official:

JOYCE E. MORROW
Administrative Assistant to the
Secretary of the Army

1132517

Distribution:

To be distributed in accordance with the initial distribution number (IDN) 390560 requirements for TM 9-2330-202-13&P.

THE METRIC SYSTEM AND EQUIVALENTS

Linear Measure

1 Centimeter = 10 Millimeters = 0.01 Meters = 0.3937 Inches
1 Meter = 100 Centimeters = 1000 Millimeters = 39.37 Inches
1 Kilometer = 1000 Meters = 0.621 Miles

Weights

1 Gram = 0.001 Kilograms = 1000 Milligrams = 0.035 Ounces
1 Kilogram = 1000 Grams = 2.2 Pounds
1 Metric Ton = 1000 Kilograms = 1 Megagram = 1.1 Short Tons

Liquid Measure

1 Milliliter = 0.001 Liters = 0.0338 Fluid Ounces
1 Liter = 1000 Milliliters = 33.82 Fluid Ounces

Square Measure

1 Sq Centimeter = 100 Sq Millimeters = 0.155 Sq Inches
1 Sq Meter = 10,000 Sq Centimeters = 10.76 Sq Feet
1 Sq Kilometer = 1,000,000 Sq Meters = 0.0386 Sq Miles

Cubic Measure

1 Cu Centimeter = 1,000 Cu Millimeters = 0.06 Cu Inches
1 Cu Meter = 1,000,000 Cu Centimeters = 35.31 Cu Feet

Temperature

9/5 °C +32 = °F
5/9 (°F - 32) = °C
212° Fahrenheit is equivalent to 100° Celsius
90° Fahrenheit is equivalent to 32.2° Celsius
32° Fahrenheit is equivalent to 0° Celsius

APPROXIMATE CONVERSION FACTORS

To Change	To	Multiply By
Inches	Centimeters	2.540
Feet	Meters	0.305
Yards	Meters	0.914
Miles	Kilometers	1.609
Sq Inches	Sq Centimeters	6.451
Sq Feet	Sq Meters	0.093
Sq Yards	Sq Meters	0.836
Sq Miles	Sq Kilometers	2.590
Acres	Sq Hectometers	0.405
Cubic Feet	Cubic Meters	0.028
Cubic Yards	Cubic Meters	0.765
Fluid Ounces	Milliliters	29.573
Pints	Liters	0.473
Quarts	Liters	0.946
Gallons	Liters	3.785
Ounces	Grams	28.349
Pounds	Kilograms	0.454
Short Tons	Metric Tons	0.907
Pound-Feet	Newton-Meters	1.356
Pounds per Sq Inch	Kilopascals	6.895
Miles per Gallon	Kilometers per Liter	0.425
Miles per Hour	Kilometers per Hour	1.609

To Change	To	Multiply By
Centimeters	Inches	0.394
Meters	Feet	3.280
Meters	Yards	1.094
Kilometers	Miles	0.621
Sq Centimeters	Sq Inches	0.155
Sq Meters	Sq Feet	10.764
Sq Meters	Sq Yards	1.196
Sq Kilometers	Sq Miles	0.386
Sq Hectometers	Acres	2.471
Cubic Meters	Cubic Feet	35.315
Cubic Meters	Cubic Yards	1.308
Milliliters	Fluid Ounces	0.034
Liters	Pints	2.113
Liters	Quarts	1.057
Liters	Gallons	0.264
Grams	Ounces	0.035
Kilograms	Pounds	2.205
Metric Tons	Short Tons	1.102
Newton-Meters	Pound-Feet	0.738
Kilopascals	Pounds per Sq Inch	0.145
Kilometers per Liter	Miles per Gallon	2.354
Kilometers per Hour	Miles per Hour	0.621