*TM 9-2330-385-10

TECHNICAL MANUAL
OPERATOR'S MANUAL
FOR

PALLETIZED LOAD SYSTEM TRAILER (PLST)
M1076
NSN 2330-01-303-5197

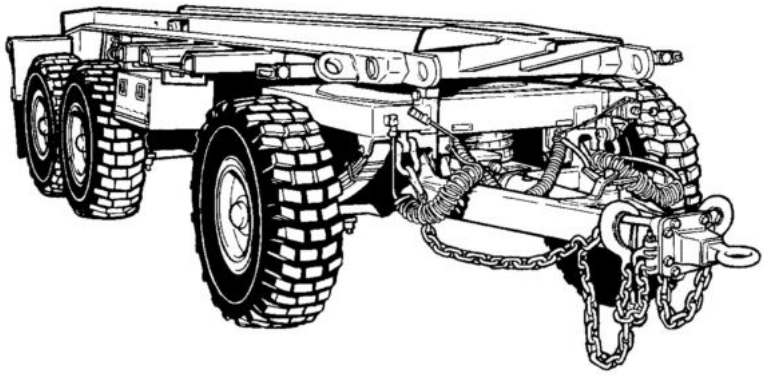

*SUPERSEDURE NOTICE - This TM supersedes TM 9-2330-385-14 dated 31 December 2005. All maintenance and troubleshooting information formerly located in this TM can now be found in the PLS IETM (TM 9-2320-364-14&P).
DISTRIBUTION A - Approved for public release; distribution is unlimited.

HEADQUARTERS, DEPARTMENT OF THE ARMY
30 APRIL 2009

WARNING SUMMARY

GENERAL SAFETY CAUTION/WARNING SUMMARY

- This list summarizes critical warnings. They are repeated here to let you know how important they are.
- Study these warnings carefully.
- They can save your life and the lives of personnel you work with.
- If there is any doubt about handling tools, materials, equipment, and procedures, see TB 43-0216, Safety and Hazard Warnings for Operation and Maintenance of TACOM Equipment.

FOR INFORMATION ON FIRST AID:

Reference FM 4-25.11. (WP 0048)

WARNING

MODIFICATION HAZARD

- Unauthorized modifications to, alterations to, or installations on this equipment are prohibited and are in violation of AR 750-10.
- Failure to comply may result in injury or death to personnel or damage to equipment.

WARNING

HIGH-PRESSURE HYDRAULIC SYSTEM

- Hydraulic systems can cause serious injuries if high-pressure lines or equipment fails.

- Never work on hydraulic systems or equipment unless there is another person nearby who is familiar with the operation and hazards of the equipment and can give first aid.
- Never disconnect any hydraulic hose or part while the engine is running. Allow several minutes to elapse after shutting off engine, to allow pressure to relieve itself, before attempting to remove hoses. Failure to comply may result in injury to personnel.
- The PLS vehicles contain hydraulic systems operating at oil pressures up to 3,700 psi (25,512 kPa). Never disconnect any hydraulic line or fitting without first dropping the pressure to zero. Failure to comply may result in serious injury or death to personnel.
- Be sure to wear eye protection when working around hydraulic pressurized systems. Failure to comply may result in serious injury or death to personnel.

WARNING

ELECTRICAL SYSTEM

- Remove all jewelry, such as rings, ID tags, bracelets, etc. If jewelry or tools contact electrical circuits, a direct short may result. Failure to comply may result in serious injury or death to personnel.
- Do not smoke, use open flame, make sparks or other ignition sources around batteries. A battery giving off gas could explode. Failure to comply may result in serious injury or death to personnel.
- Be careful when working on or with electrical equipment. Do not be misled by the term "low voltage". Voltages as low as 50 volts can cause death. For artificial respiration, refer to FM 4-25.11.
- When working inside the vehicle with power off, be sure to ground every capacitor likely to hold a dangerous voltage potential.
- Never work on electronic equipment unless there is another person nearby who is familiar with the operation and hazards of the equipment.

WARNING

SOLVENT CLEANING COMPOUND

- Solvent cleaning compound MIL-PRF-680 Type II and III may be irritating to the eyes and skin. Use protective gloves and goggles. Use in a well-ventilated area. Use respirator as needed. Accidental ingestion can cause irritation of digestive tract and respiratory tract, may cause lung and central nervous system damage. Can be fatal if swallowed. Inhalation of high/massive concentrations can cause coma or be fatal. First aid for ingestion: do not induce vomiting. Seek immediate medical attention. First aid for skin contact: remove contaminated clothing. Wash skin thoroughly with soap and water. If symptoms persist, seek medical attention. First aid for eye contact: flush with water for 15 minutes or until irritation subsides. If symptoms persist, seek medical attention. First aid for inhalation: move to fresh air. If not breathing, provide artificial respiration. If symptoms persist, seek medical attention. Keep away from open flames and other sources of ignition. Failure to follow this warning may result in injury or death to personnel.
- The flashpoint for Type II solvent cleaning compound is 141-198°F (61-92°C), and Type III is 200-241°F (93-116°C).
- Improper cleaning methods and use of unauthorized cleaning solvents may injure personnel and damage equipment.
- Fire extinguishers should be placed nearby when using solvent cleaning compound. Failure to follow this warning may result in injury or death.
- Cloths or rags saturated with solvent cleaning compound must be disposed of IAW authorized facilities' procedures. Failure to follow this warning may result in injury.
- Eye shields must be worn when cleaning with a wire brush. Flying rust and metal particles may cause injury.

WARNING

POLYURETHANE COATING (CARC)

- Eye and hearing protection must be worn at all times when using power tools for grinding, cutting, sawing, and drilling. Failure to do so may result in injury to personnel. Chemical Agent Resistant Coating (CARC) paint contains isocyanate which is highly irritating to skin and respiratory system. High concentrations of isocyanate can produce symptoms of itching and reddening of skin, a burning sensation in the throat and nose, and watering of the eyes. In extreme concentrations, isocyanate can cause cough, shortness of breath, pain during respiration, increased sputum production, and chest tightness. First aid for ingestion: do not induce vomiting. Seek immediate medical attention. First aid for skin contact: remove contaminated clothing. Wash skin thoroughly with soap and water. If symptoms persist, seek medical attention. First aid for eye contact: flush with water for 15 minutes or until irritation subsides. If symptoms persist, seek medical attention. First aid for inhalation: move to fresh air. If not breathing, provide artificial respiration. If symptoms persist, seek medical attention.
- The following precautions must be taken whenever using CARC paint:
- Protective equipment (gloves, goggles, ventilation mask) must be worn when using CARC paint.
- NEVER cut CARC-coated materials without high-efficiency, air-purifying respirators in use.
- DO NOT grind or sand painted equipment without high-efficiency, air-purifying respirators in use.
- BE AWARE of CARC paint exposure symptoms; symptoms can occur a few days after initial exposure. Seek medical help immediately if symptoms are detected.
- Use only in well-ventilated area. Check with local environmental office for methods and locations approved for painting in accordance with local and state environmental regulations.
- Always use air line respirators when using CARC paint unless air sampling shows exposure to be below standards. Use chemical cartridge respirator if air sampling is below standards.

WARNING

ADHESIVE

- Adhesive, solvents and sealing compounds can burn easily and are harmful causing immediate bonding on contact with eyes, skin, or clothing and gives off harmful vapors.
- If adhesive, solvent, or sealing compound gets on skin or clothing, wash immediately with soap and water.
- If adhesive gets in your eyes, try to keep them open; flush them with water for 15 minutes and get immediate medical attention.
- Wear protective goggles and use in a well-ventilated area.
- Keep away from open fire and use in well-ventilated area to avoid injury or death.

WARNING

FLAMMABLE LIQUID AND COMBUSTIBLE VAPOR

- Gasoline, fuel oil, lubricating oil, grease, paint, paint thinner, cleaning solvents, and other combustible liquids present a serious fire hazard.
- Combustible liquids must ALWAYS be stored in their approved containers and designated compartments or deck storage locations.
- Ensure exhaust and ventilation fans are operating while using cleaning solvents or paint products.
- Never store or charge batteries in a confined space without ventilation or near electrical equipment.
- Fuel is very flammable and can explode easily.
- To avoid serious injury or death, keep fuel away from open fire and keep fire extinguisher within easy reach when working with fuel.

- Do not work on fuel system when engine is hot. Fuel can be ignited by hot engine.
- When working with fuel, post signs that read NO SMOKING WITHIN 50 FEET OF VEHICLE.
- Starting fluid is toxic and flammable. Do not store in cab and do not breathe fumes. Do not puncture or burn containers. Dispose of container following manufacturer's recommendations on the container.

WARNING

LIFTING OPERATIONS

- All personnel must stand clear during lifting operations. A swinging or shifting load may cause injury or death to personnel.
- Never crawl under equipment when performing maintenance unless equipment is securely blocked. Failure to comply may cause injury or death to personnel.
- Keep clear of equipment when it is being raised or lowered. Failure to comply may cause injury or death to personnel.
- Do not work on any item supported only by lift jacks or hoist. Always use blocks or proper stands to support the item prior to any work. Failure to comply may result in injury or death to personnel.
- Do not lift a load greater than the rated load capacity of the crane or materiel handling equipment. Failure to comply may result in injury or death to personnel or damage to equipment.
- Do not allow heavy components to swing while hanging by lifting device. Failure to comply may cause injury or death to personnel.
- Any part or component that weighs between 50 lbs (23 kg) and 75 lbs (34 kg) must be removed with the aid of an assistant. Any part or component that weighs over 75 lbs (34 kg) must be removed with the aid of an assistant and a lifting device. Failure to comply may cause injury or death to personnel.
- Ensure all chains, hooks, and slings are in good condition and are of correct capacity. Ensure hooks are positioned correctly. Failure to comply may result in injury or death to personnel.

WARNING

MOVING MACHINERY

- Use extreme care when operating or working near moving machinery including running engine, rotating shafts, and other moving parts. Failure to comply may result in injury or death to personnel.
- Use extreme care when measuring voltage while engine is running around rotating fan blade and hot engine parts. Failure to comply may result in injury or death to personnel.

WARNING

HEAVY-DUTY WINCH OPERATION

- All personnel must stand clear during winching operations from possible snapping cable or shifting load. Failure to comply may result in injury or death to personnel.
- When hooking up for winching operations, position throat (open part) of hook upward in case overloading straightens out hook. Failure to comply may result in injury or death to personnel.
- The cable drum requires a minimum of three or four wraps of wire rope (cable) for safety. Failure to comply may result in injury or death to personnel.
- Be careful when handling the winch cable. Ensure cut ends are taped. Ensure cut ends of cable on winch assembly are securely fastened down. Failure to comply may result in injury or death to personnel.
- Always wear leather gloves when handling winch cable. Failure to comply may result in injury or death to personnel.

WARNING

LOAD HANDLING SYSTEM OPERATION

- Check for overhead power lines, ground condition for firmness, and other obstructions before attempting LHS operation.
- LHS hook maximum lifting height is 18 ft (5.5 m). Failure to comply can result in injury or death to personnel.

WARNING

PARTS UNDER PRESSURE

- Wear safety goggles and use caution when removing or installing springs, snap rings, retaining rings, and other parts under spring tension. These parts can act as projectiles. Failure to comply may result in injury or death to personnel.
- The radiator is very hot and pressurized during vehicle operation. Let radiator cool before removing cap. Failure to do so can result in serious burns.
- During pressure tests, ensure air pressure is drained to 0 psi (0 kPa) before taking off any components. If pressure is not released, plates or line could blow off and harm personnel. Do not drain air from tank with any part of body in air spray path. Skin embolisms and/or debris in eyes can occur from released pressure.
- High air pressure may be released from valve stem when valve core is removed. Stay clear of valve stem after core is removed. Ensure all personnel wear suitable eye protection. Failure to comply may result in injury to personnel.
- Stand clear of trajectory area during deflation or personal injury or death may result.

- Lock-ring is under tension. If lock-ring breaks loose it could cause injury to personnel. Keep hands and fingers away from lock-ring when removing.
- Never adjust relief valve so that personnel must stand on strongback to operate latch.
- If there is any residual pressure in tank when relief valve is open, personnel may lose their balance and fall. Failure to comply may result in injury or death to personnel.
- Use extreme care when removing or installing spring retainers. Spring retainers are under tension and can act as projectiles when released suddenly. Ensure proper eye protection is worn to prevent injury to personnel.
- Use extreme care when removing or installing springs. Springs are under tension and can act as projectiles when released. Ensure proper eye protection is worn to prevent injury to personnel. Eye protection is required during all grinding operations. Failure to comply may result in serious injury to personnel.
- Failure to relieve tank pressure may result in sudden, unexpected loss of pressure. Failure to comply may result in personal injury or death.
- Do not remove the radiator cap when the engine is hot, as steam and hot coolant can escape. Failure to comply may result in personal injury or death.

WARNING

HEAVY PARTS

Any part or component that weigh over 50 lbs (23 kg) must be removed with the aid of an assistant and a lifting device. Failure to comply may result in personal injury or death.

WARNING

CRANE SYSTEM

- Always refer to the range diagram BEFORE making any lift. It is extremely important that the crane is properly leveled to prevent overstressing.
- Do not operate crane unless outriggers are set up. Always chock front wheels when using outriggers. Failure to comply may result in injury or death to personnel.
- When using crane on any vehicle, park vehicle clear of all overhead powerlines. If operating crane under power lines, do not allow vehicle to contact high-voltage connections. Failure to comply will result in death to personnel.
- Do not stand under crane. Failure to comply may result in injury or death to personnel.
- Refuse to work with worn, frayed, or damaged wire rope. Always wear heavy gloves when handling winch cables; never let cable run through hands. Frayed cables can cut. Never operate winch with less than five wraps of cable on winch drum. Failure to comply may result in injury or death to personnel.
- When using crane on any vehicle, park vehicle clear of all overhead power lines. Do not operate crane near overhead power lines. Failure to comply may result in injury or death to personnel.
- Boom has a 370 degree rotation and is mechanically stopped at five degrees on either side of the left outrigger beam. Swing operations must be slowed no later than 15 degrees prior to contacting the stop.
- Keep boom clear of electrical powerlines and other obstacles. Do not operate crane near overhead powerlines. Failure to comply will result in death to personnel.
- Avoid quick, jerking, winch operation. Keep other personnel well away from vehicles involved in winching operations. A snapped cable or shifting load can cause serious injury or death.
- If possible, keep one hand away from equipment to reduce the hazard of current flowing through vital organs of the body.

- Keep fingers clear of top of lift-hook. Failure to comply could result in personnel injury.

WARNING

CARBON MONOXIDE (EXHAUST GAS) CAN CAUSE DEATH

- Carbon monoxide does not have color or smell and can cause death.
- Breathing air with carbon monoxide produces symptoms of headache, dizziness, loss of muscular control, a sleepy feeling and coma. Brain damage or death can result from heavy exposure.
- Carbon monoxide is in exhaust fumes of fuel-burning heaters and internal combustion engines.
- Carbon monoxide can become dangerously concentrated under conditions of no ventilation.
- Precautions must be taken to ensure crew safety when the personnel heater or engine of any vehicle is operated for any purpose. Failure to comply may result in injury or death to personnel.
- DO NOT operate vehicle engine in a closed place unless the place has proper ventilation. Failure to comply may result in injury or death to personnel.
- DO NOT drive any vehicle with inspection plates, cover plates, or engine compartment covers removed unless necessary for maintenance purposes. Failure to comply may result in injury or death to personnel.
- BE ALERT at all times during vehicle operation for exhaust odors and exposure symptoms. If either odor or exposure symptoms are present, IMMEDIATELY VENTILATE personnel compartments. If symptoms continue, remove affected crew to fresh air and keep warm. DO NOT PERMIT PHYSICAL EXERCISE. If necessary, give artificial respiration and get immediate medical attention. For artificial respiration, refer to FM 4-25.11 . Failure to comply may result in injury or death to personnel.
- BE AWARE that the gas particulate filter unit or the field protection mask for nuclear-biological-chemical protection WILL NOT offer safety from carbon monoxide poisoning.

WARNING

EXTREME HEAT

If required to remain inside the vehicle during extreme heat, occupants should follow the water intake, work/rest cycle, and other heat stress preventive medicine measures contained in FM 21-10, Field Hygiene and Sanitation.

WARNING

CABLES

- Always wear heavy gloves when handling winch cables; never let cable run through hands. Frayed cables can cut. Failure to comply may result in injury or death to personnel.
- Never operate winch with less than five wraps of cable on winch drum. Frayed cables can cut. Failure to comply may result in injury or death to personnel.

WARNING

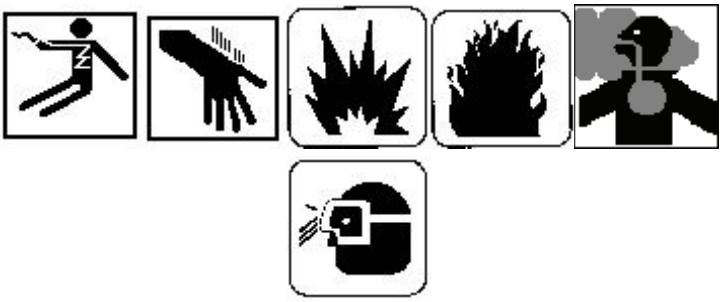

BATTERY

- Battery acid is harmful to skin and eyes. Be careful not to short out battery terminals. Failure to comply may result in injury or death to personnel.
- Do not smoke or use open flame near batteries. Batteries may explode from a spark. Failure to comply may result in injury or death to personnel.

WARNING

NBC

- NBC-contaminated air filters must be handled and disposed of only by authorized and trained personnel.
- The unit commander or senior officer in charge of maintenance personnel must ensure that prescribed protective clothing (FM 3-11.4) is used, and prescribed safety measures and decontamination procedures (FM 3-11.5) are followed.
- The local unit SOP is responsible for final disposal of contaminated air filters. Failure to comply may cause severe injury or death to personnel.

WARNING

TIRE OPERATION

- Operating a vehicle with a tire in an overinflated or underinflated condition, or with a questionable defect, may lead to premature tire failure. Ensure tire has proper tire pressure. Failure to comply may result in injury or death to personnel.
- When inflating tires mounted on the vehicle, all personnel must remain out of trajectory of the side ring and lock-ring as shown by the areas indicated. Failure to follow proper procedures may result in serious injury or death to personnel.
- Cracked, broken, bent or otherwise damaged rim components shall not be reworked, welded, brazed, or otherwise heated or damage or personal injury or death may result.
- No heat shall be applied to a multi-piece wheel or wheel component or damage or injury or death may result.
- Failure to place wheel/tire assembly in safety cage prior to initial inflation could result in serious injury or death to personnel.
- When a wheel/tire is in a restraining device, do not rest or lean any part of body or equipment on or against the restraining device, or injury or death could result.
- While changing tires or while performing tire maintenance, stay out of the trajectory path. Failure to comply may result in injury or death to personnel.
- Always use an inflation hose with an in-line gauge and a clip-on chuck when inflating tires. The gauge and valve must be mounted a minimum of 10 feet (3.10 m) away from air chuck.
- High air pressure may be released from valve stem when valve core is removed. Stay clear of valve stem after core is removed. Ensure all personnel wear suitable eye protection. Failure to comply may result in injury to personnel.
- Tire is heavy. Brace tire to ensure tire will not fall over on you or on others.

WARNING

VEHICLE OPERATION

- Speed limits posted on curves reflect speeds that are considered safe for automobiles. Heavy trucks with a high center of gravity can roll over at these speed limits. Use caution and reduce your speed below the posted limit before entering a curve. Failure to comply may result in vehicle crash and injury to personnel.
- Use caution and reduce your speed below the posted limit before entering a curve. Failure to comply may result in vehicle crash and injury to personnel.
- Always use seatbelts when operating vehicle. Failure to use seatbelt can result in serious injury or death in case of accident.
- Operation at speeds over 15 mph (24 kph) on paved roads can be achieved when the operator determines that the vehicle being towed and the terrain allow safe operation.
- Under no condition can speeds over 35 mph (55 kph) on paved road and 15 mph (24 kph) off-road be allowed. Loss of control can cause serious injury or death. Excessive speed can cause damage to vehicle being towed.

WARNING

BRAKES

- Ensure all personnel are clear from front of truck before performing brake stall check. Be ready to apply service brake. Operator must remain in cab while performing this check. Failure to comply could result in personnel injury.
- Never use parking brake for normal braking or wheels will lock up causing severe skid. Skidding vehicle may result in serious personal injury or death.

- Do not use trailer brakes as a parking brake. Trailer brakes may not hold loaded vehicle and trailer on a grade. A runaway vehicle may cause severe personal injury or death.
- Engine must be shut OFF and parking brake set before performing PMCS walkaround. Failure to comply may result in injury or death to personnel.

WARNING

BURNS

The exhaust pipe and muffler can become very hot during vehicle operation. Be careful not to touch these parts with bare hands, or allow body to come in contact with exhaust pipe or muffler. Exhaust system parts can become hot enough to cause serious burns.

WARNING

HEARING PROTECTION

- Excessive noise levels are present any time the heavy-duty winch or crane is operating.
- Wear single hearing protection (earplugs or equivalent) while working around equipment while it is running. Failure to do so could result in damage to your hearing.
- Seek medical aid should you suspect a hearing problem.

WARNING

COMPRESSED AIR

- Brake shoes may be coated with dust. Breathing this dust may be harmful to your health.
- Do not use compressed air to clean brake shoes. Wear a filter mask approved for use against brake dust. Failure to comply may result in injury or death to personnel.
- Compressed air used for cleaning purposes will not exceed 30 psi (207 kPa).
- Use only with effective chip guarding and personal protective equipment, goggles, shield, and gloves.

LIST OF EFFECTIVE PAGES/WORK PACKAGES

NOTE:

*This TM supersedes TM 9-2330-385-14 dated 31 December 2005. All maintenance and troubleshooting information formerly located in this TM can now be found in the PLS IETM (TM 9-2320-364-14&P). Zero in the "Change No." column indicates an original page or work package.

Date of issue for the original manual is:

Original 30 APRIL 2009

TOTAL NUMBER OF PAGES FOR FRONT AND REAR MATTER IS 44 AND TOTAL NUMBER OF WORK PACKAGES IS 50, CONSISTING OF THE FOLLOWING:

Page/WP No.	Change No.	Page/WP No.	Change No.
Front Cover	0	WP 0021 (2 pages)	0
Warning Summary	0	WP 0022 (2 pages)	0
i-xvi	0	WP 0023 (2 pages)	0
Chp 1 - General Information,		WP 0024 (2 pages)	0
Equipment Description, and		WP 0025 (2 pages)	0
Theory of Operation	0	WP 0026 (2 pages)	0
WP 0001 (20 pages)	0	WP 0027 (2 pages)	0
WP 0002 (10 pages)	0	WP 0028 (4 pages)	0
WP 0003 (6 pages)	0	WP 0029 (2 pages)	0
Chp 2 - Operator Instructions	0	WP 0030 (2 pages)	0
WP 0004 (2 pages)	0	WP 0031 (4 pages)	0
WP 0005 (2 pages)	0	Chp 3 - Troubleshooting	
WP 0006 (2 pages)	0	Procedures	0
WP 0007 (2 pages)	0	WP 0032 (2 pages)	0
WP 0008 (2 pages)	0	WP 0033 (4 pages)	0
WP 0009 (2 pages)	0	WP 0034 (4 pages)	0
WP 0010 (22 pages)	0	WP 0035 (2 pages)	0
WP 0011 (10 pages)	0	WP 0036 (4 pages)	0
WP 0012 (10 pages)	0	WP 0037 (2 pages)	0
WP 0013 (2 pages)	0	WP 0038 (2 pages)	0
WP 0014 (8 pages)	0	Chp 4 - Preventive Maintenance	
WP 0015 (2 pages)	0	Checks and Services (PMCS)	0
WP 0016 (6 pages)	0	WP 0039 (4 pages)	0
WP 0017 (4 pages)	0	WP 0040 (8 pages)	0
WP 0018 (6 pages)	0	WP 0041 (2 pages)	0
WP 0019 (2 pages)	0	WP 0042 (10 pages)	0
WP 0020 (4 pages)	0	WP 0043 (4 pages)	0

Page/WP No.	Change No.	Page/WP No.	Change No.
WP 0044 (2 pages)	0	Chp 6 - Supporting Information	0
Chp 5 - Maintenance Instructions	0	WP 0048 (4 pages)	0
WP 0045 (6 pages)	0	WP 0049 (10 pages)	0
WP 0046 (16 pages)	0	WP 0050 (8 pages)	0
WP 0047 (10 pages)	0		

HEADQUARTERS
DEPARTMENT OF THE ARMY
WASHINGTON, DC, 30 APRIL 2009

TECHNICAL MANUAL

PALLETIZED LOAD SYSTEM (PLST) TRAILER
M1076
NSN 2330-01-303-5197

REPORTING ERRORS AND RECOMMENDING IMPROVEMENTS

You can help improve this publication. If you find any errors, or if you would like to recommend any improvements to the procedures in this publication, please let us know. The preferred method is to submit your DA Form 2028 (Recommended Changes to Publications and Blank Forms) through the Internet, on the Army Electronic Product Support (AEPS) website. The Internet address is https://aeps.ria.army.mil. The DA Form 2028 is located under the Public Applications section in the AEPS Public Home Page. Fill out the form and click on SUBMIT. Using this form on the AEPS will enable us to respond quicker to your comments and better manage the DA Form 2028 program. You may also mail, e-mail, or fax your comments or DA Form 2028 directly to the U.S. Army TACOM Life Cycle Management Command. The postal mail address is U.S. Army TACOM Life Cycle Management Command, ATTN: AMSTA-LC-LMPP / TECH PUBS, 1 Rock Island Arsenal, Rock Island, IL 61299-7630. The e-mail address is tacomlcmc.daform2028@us.army.mil. The fax number is DSN 793-0726 or Commercial (309) 782-0726.

*SUPERSEDURE NOTICE - *This TM supersedes TM 9-2330-385-14 dated 31 December 2005. All maintenance and troubleshooting information formerly located in this TM can now be found in the PLS IETM (TM 9-2320-364-14&P).
DISTRIBUTION A - Approved for public release: distribution is unlimited.

TABLE OF CONTENTS

TABLE OF CONTENTS - Continued

TABLE OF CONTENTS - Continued

TABLE OF CONTENTS - Continued

TABLE OF CONTENTS - Continued

TABLE OF CONTENTS - Continued

TABLE OF CONTENTS - Continued

TABLE OF CONTENTS - Continued

TABLE OF CONTENTS - Continued

TABLE OF CONTENTS - Continued

TABLE OF CONTENTS - Continued

HOW TO USE THIS MANUAL

USABLE ON CODE (UOC) INFORMATION

Usable On Code (UOC) - the user should be aware that the M1076 Palletized Load System (PLS) Trailer (PLST) UOC is "076". Depending on the format used for printing this manual, the user may not see instructions printed in this manual stating what information is applicable to which model PLS series vehicle by UOC.

PRECEDENCE

The PLS Interactive Electronic Technical Manual (IETM) TM 9-2320-364-14&P takes precedence over this manual. The purpose of this manual is to give the operator a usable operator's manual in the absence of the IETM, NOT to take the place of the IETM.

Updates and revisions to this manual can be found within the PLS Interactive Electronic Technical Manual (IETM) TM 9-2320-364-14&P. Activities should regularly check the IETM for updates and revisions to this manual.

WARNINGS, CAUTIONS, AND NOTES

Read all WARNINGS, CAUTIONS, and NOTES before performing any procedure.

Warnings, cautions, notes, subject headings, and other essential information are printed in **BOLD** type, making them easier for the user to see.

GENERAL INFORMATION

This manual is designed to help operate and maintain the Palletized Load System Trailer (PLST). Listed below are some features included in this manual to help locate and use the required information:

- Chapter 1 of this manual includes PLS Trailer general information, theory of operation, differences between models, etc.
- Chapter 2 of this manual provides operating procedures for both the PLS Trailer, and its accompanying operating systems.
- Chapter 3 of this manual provides operator troubleshooting procedures for both the PLS Trailer, and its accompanying operating systems.
- Chapter 4 of this manual provides operator Preventive Maintenance Checks and Services (PMCS) for the PLS Trailer.

In addition to text, there are illustrations showing:

1. Components, controls, and indicators.
2. How to take a component off, and put it back on.
3. Cleaning and inspection criteria are also listed when necessary.

CHAPTER 1

GENERAL INFORMATION, EQUIPMENT DESCRIPTION, AND THEORY OF OPERATION

OPERATOR MAINTENANCE
GENERAL INFORMATION

SCOPE

This manual is used for operation and operator-performed maintenance of Palletized Load System M1074 and M1075 series vehicles, M1076 PLS Trailers, M1077 Flatracks, and M1 ISO Compatible Flatracks. M1074 series vehicles are similar to M1075 except for the addition of a Material Handling Crane (MHC) and Self-Recovery Winch (SRW) kit. Models are as follows:

MODEL	DESCRIPTION
M1076	Palletized Load System Trailer (PLST) is designed specifically for Palletized Load System. The trailer can be loaded directly from the vehicle using the Load Handling System (LHS) and Flatrack M1077. 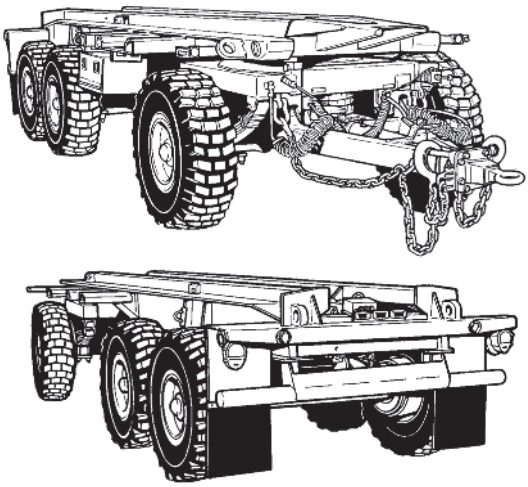

MAINTENANCE FORMS AND RECORDS

Department of the Army forms and procedures used for equipment maintenance will be those prescribed by DA PAM 750-8, The Army Maintenance Management System (TAMMS) User Manual.

REPORTING EQUIPMENT IMPROVEMENT RECOMMENDATIONS (EIR)

The quarterly TB 43-0001-62 (series) Equipment Improvement Report and Maintenance Digest contains valuable field information on equipment covered in this manual. Information in the TB 43-0001-62 (series) Equipment Improvement Report and Maintenance Digest is compiled from some of the Equipment Improvement Reports (EIR) that have been prepared on vehicles covered in this manual. Many of these articles result from comments, suggestions, and improvement recommendations that were submitted to the EIR program. TB 43-0001-62 (series) Equipment Improvement Report and Maintenance Digest contains information on equipment improvements, minor alterations, proposed Modification Work Orders (MWOs), warranties (if applicable), actions taken on some of the DA Form 2028 (WP 0048) (Recommended Changes to Publications and Blank Forms), and advance information on proposed changes that may affect this manual. Refer to the TB 43-0001-62 (series) Equipment Improvement Report and Maintenance Digest periodically for the most current and authoritative information on the equipment. The information will help to do a better job and will advise of the latest changes to this manual. Also refer to DA PAM 25-30, Consolidated Index of Army Publications and Blank Forms at http://www.army.mil/usapa/2530.html, and reference section of this manual. If you have a change recommendation to this manual, submit a DA Form 2028 (WP 0048) (Recommended Changes to Publications and Blank Forms) via e-mail to: tacomlcmc.daform2028@us.army.mil.

You can help improve this publication. If you find any mistakes or if you know of a way to improve the procedures, please let us know. Submit your DA Form 2028 (WP 0048) (Recommended Changes to Equipment Technical Publications and Blank Forms) through the Internet, on the Army Electronic Product Support (AEPS) website. The Internet address is https://aeps.ria.army.mil. The DA Form 2028 (WP 0048) is located under the Public Applications section in the AEPS Public Home Page. Fill out the form and click on SUBMIT. Using this form on the AEPS will enable us to respond quicker to your comments and better manage the DA Form 2028 program. You may also mail, fax or e-mail your letter or DA Form 2028 (WP 0048) direct to: TACOM Life Cycle Management Command, ATTN: AMSTA-LC-LMPP / TECH PUBS, 1 Rock Island Arsenal, Rock Island, IL 61299-7630. The e-mail address is tacomlcmc.daform2028@us.army.mil. The fax number is DSN 793-0726 or Commercial (309) 782-0726.

HAND RECEIPT (HR) INFORMATION

The TM 9-2320-364-10-HR (Hand Receipt) is a companion document to this manual, which consists of preprinted hand receipts (DA Form 2062) that list end item related equipment (COEI, BII, (WP 0049) and AAL) which must be accounted for. As an aid to property accountability, additional Hand Receipt (-HR) Manuals may be requisitioned from the following source in accordance with procedures in DA PAM 25-30, Consolidated Index of Army Publications and Blank Forms; Commander US Army Distribution Operation Facility, 1655 Woodson Road, St Louis, MO 63114-6181.

CORROSION PREVENTION AND CONTROL (CPC)

Corrosion prevention and control (CPC) of Army material is a continuing concern. It is important that any corrosion problems be reported so they can be corrected and improvements can be made to prevent problems in the future. While corrosion is typically associated with the rusting of metals, it can also include deterioration of other materials, such as rubber and plastic. Unusual cracking, softening, swelling, or breaking of these materials may be a corrosion problem.

If a corrosion problem is identified, it can be reported using SF 368 (WP 0048). The use of key words, such as "corrosion", "rust", "deterioration", and "cracking" will ensure that the information is identified as a CPC problem.

DESTRUCTION OF ARMY MATERIAL TO PREVENT ENEMY USE

Command decision, according to the tactical situation, will determine when the destruction of the equipment will be accomplished. A destruction plan will be prepared by the using organization unless one has been prepared by a higher authority. Refer to TM 750-244-6, (WP 0048) Procedures for Destruction of Tank Automotive Equipment to Prevent Enemy Use, for general destruction procedures.

PREPARATION FOR STORAGE OR SHIPMENT

See information on preparing the PLS series vehicles, trailers, and flatracks for storage or shipment.

WARRANTY INFORMATION

The PLS is warranted by Oshkosh Truck Corporation for 12 months. For complete information covering this warranty refer to TB 9-2320-364-15, (WP 0048) Warranty Procedures for Vehicle, Tractor, M1074 and M1075, Palletized Load System (PLS) NSN 2320-01-304-2277 and 2320-01-304-2278. Trailer and flatrack warranty starts on the date found in block 23, DA Form 2408-9, (WP 0048) in logbook. Report all defects in materiel or workmanship to the supervisor, who will take appropriate action.

NOMENCLATURE CROSS-REFERENCE LIST

Table 1.

Common Name	Official Nomenclature
Cable	Wire rope
Cold Start System	Ether quick start system
Engine Coolant	Antifreeze, ethylene glycol mixture

NOMENCLATURE CROSS-REFERENCE LIST - Continued

Table 1. - Continued

Common Name	Official Nomenclature
Glad Hand	Quick disconnect air coupling
Jackstand	Trestle
Jake Brake	Engine brake
Service Brake Pedal	Brake pedal
Throttle Pedal	Throttle control
Towing Eye	Drawbar lunette
Towing Pintle	Self-guiding coupler

LIST OF ABBREVIATIONS

Table 2.

AAL	Additional Authorization List
AC	Alternating Current
amp	Amperes
AOAP	Army Oil Analysis Program
ATEC	Allison Transmission Electronic Control
BII	Basic Issue Item
BOI	Basis of Issue
C	Centigrade
CAGE	Commercial and Government Entity
CBR	Chemical, Biological, Radiological

LIST OF ABBREVIATIONS - Continued

Table 2. - Continued

CCA	Cold Cranking Amps
CCW	Counterclockwise
CHU	Container Handling Unit
CID	Cubic Inch Displacement
CKT	Circuit
cm	Centimeter
COEI	Components of End Item
CTA	Common Table of Allowance
CTIS	Central Tire Inflation System
CTS/ICE	Contact Test Set/Internal Combustion Engine
cu in.	Cubic Inch
CW	Clockwise
DA	Department of the Army
DAC	Direct Access Card
DC	Direct Current
DDC	Detroit Diesel Corporation
DDEC II	Detroit Diesel Electronic Control II
DDEC III	Detroit Diesel Electronic Control III
DDEC IV	Detroit Diesel Electronic Control IV
DUVAC	Dual Voltage Control System

LIST OF ABBREVIATIONS - Continued

Table 2. - Continued

ECU	Electronic Control Unit
EIR	Equipment Improvement Recommendation
F	Fahrenheit
FCRD	Fault Code Retrieval Device
FR	Flatrack
ft	Foot
GAWR	Gross Axle Weight Rating
GCWR	Gross Combination Weight Rating
GFM	Government Furnished Material
GPFU	Gas Particulate Filter Unit
GPM	Gallons per Minute
GVW	Gross Vehicle Weight
Hcg	Horizontal Location of Center of Gravity
HD	Heavy Duty
hp	Horsepower
ICSC	International Convention For Safe Containers
IETM	Interactive Electronic Technical Manual
in.	Inch
IPF	ISO-Compatible Palletized Flatrack
ISO	International Standards Organization

LIST OF ABBREVIATIONS - Continued

Table 2. - Continued

JTA	Joint Table of Allowances
kg	Kilogram
km/h	Kilometer Per Hour
kPa	Kilopascal
kw	Kilowatt
L	Liter
lb-ft	Pound-Foot
lb-in	Pound-Inch
lb	Pound
LF	Lifting Frame
LHS	Load Handling System
m	Meter
MHC	Material Handling Crane
ml	Milliliters
ml/rev	Milliliter per Revolution
MLRS	Multiple Launch Rocket System
mm	Millimeter
mph	Miles Per Hour
N·m	Newton Meter
NBC	Nuclear, Biological, Chemical
NSN	National Stock Number

LIST OF ABBREVIATIONS - Continued

Table 2. - Continued

OTC	Oshkosh Truck Corporation
Pk	Package
PLS	Palletized Load System
PLST	Palletized Load System Trailer
PMCS	Preventive Maintenance Checks and Services
Pr	Pair
psi	Pound-Force Per Square Inch
pt	Pint
PTO	Power Takeoff
QA/QC	Quality Assurance/Quality Control
Qt	Quart
QTY	Quantity
RPSTL	Repair Parts and Special Tools List
RFI	Radio-Frequency Interference
RPC	Rocket Pod Containers
rpm	Revolutions Per Minute
SAE	Society of Automotive Engineers
SMR	Source, Maintenance, and Recoverability
SRW	Self-Recovery Winch
STD	Standard

LIST OF ABBREVIATIONS - Continued

Table 2. - Continued

STE/ICE	Simplified Test Equipment/Internal Combustion Engine
TAMMS	The Army Maintenance Management System
TDA	Tables of Distribution and Allowance
TM	Technical Manual
TMDE	Test, Measurement, and Diagnostic Equipment
U/I	Unit Of Issue
U/M	Unit Of Measure
Vcg	Vertical Location of Center of Gravity
vdc	Volts Direct Current
XHD	Extra Heavy-Duty

Table 3.

WARNING ICON	DESCRIPTION
	AIR PRESSURE - human hand blocking air gun shows the need to reduce air pressure before use, or debris may injure user and/or damage equipment.

LIST OF ABBREVIATIONS - Continued

Table 3. - Continued

	BIOLOGICAL - abstract symbol bug shows that a material may contain bacteria or viruses that present a danger to life or health.
	CHEMICAL - drops of liquid on hand shows that the material will cause burns or irritation to human skin or tissue.
	ELECTRICAL - electrical wire to arm with electricity symbol running through human body shows that shock hazard is present.
	EXPLOSION - rapidly expanding symbol shows that the material may explode if subjected to high temperatures, sources of ignition, or high pressure.
	EXTREMELY COLD SURFACE - hand touching object with ice formed on both shows that surface is extremely cold and can damage human tissue.

LIST OF ABBREVIATIONS - Continued

Table 3. - Continued

	EYE PROTECTION - person with goggles shows that the material will injure the eyes.
	FIRE - flame shows that material may ignite and cause burns.
	FIRE EXTINGUISHER - shows that material may ignite and a fire extinguisher should be within easy reach.
	HEAVY OBJECT - human figure stooping over heavy object shows physical injury potential for improper lifting technique and/ or need of aid of assistant(s) and/or need for lifting device (as required).
	HEAVY PARTS - foot with heavy object on top shows that heavy parts can crush and harm.

LIST OF ABBREVIATIONS - Continued

Table 3. - Continued

	HEAVY PARTS - heavy object on human figure shows that heavy parts present a danger to life or limb.
	HOT AREA - hand over object radiating heats shows that part is hot and can burn.
	MOVING PARTS - hand with fingers caught between gears shows that the moving parts of the equipment present a danger to life or limb.
	PRESSURE/TENSION HAZARD - human body being impacted by rotating projectile shows that equipment is under pressure or tension, presenting a danger to life or limb if pressure or tension is not carefully released.
	PROJECTILE HAZARD - human body with object passing through it shows that a projectile hazard exists.

LIST OF ABBREVIATIONS - Continued

Table 3. - Continued

	RADIATION - three circular wedges shows that the material emits radioactive energy and can injure human tissue.
	ROLLOVER HAZARD - vehicle indicating direction of human figure shows that vehicle may roll over presenting a danger to life or limb if hazardous conditions are not avoided.
	RUN OVER HAZARD - vehicle running over human body shows hazard.
	SHARP OBJECT - pointed object in hand shows that a sharp object presents a danger to life or limb.
	SKIN IRRITATION - hand radiating shows that material can cause skin irritation.

LIST OF ABBREVIATIONS - Continued

Table 3. - Continued

	SLICK FLOOR - wavy line on floor with legs prone shows that slick floor presents a danger for falling.
	STEAM HAZARD - human engulfed in steam cloud shows steam hazard exists that could injure/burn human tissue.
	TIRE BLOWOUT - tire with hole shows that an over or under inflated tire may rupture, presenting a danger to life or limb.
	VAPOR - human figure in a cloud shows that material vapors present a danger to life or health.
	WARNING/CAUTION - triangle with exclamation point within shows that a WARNING or CAUTION is present that indicates a potential hazard, which may cause injury or death to personnel (warning) or damage to equipment (caution).

LIST OF ABBREVIATIONS - Continued

Table 3. - Continued

	WIRE CABLE/ROPE - human hand with frayed wire cable/rope running across shows injury to unprotected (bare) hands may result.

SAFETY, CARE, AND HANDLING

Beware of payload movement during normal loading/unloading operations. Ensure tiedown straps and cargo net are correctly installed. Flatrack should be loaded on vehicle or trailer using Load Handling System (LHS), Material Handling Crane (MHC), or other suitable lifting device. Never walk under flatrack while it is being lifted, loaded, or unloaded.

For M1 flatrack, ensure sideboard kit is also correctly installed. The M1 flatrack should be loaded on vehicle or trailer using Load Handling System (LHS). M1 flatracks should be stacked using a forklift. When lifting loaded M1 flatrack, the forklift pockets located nearest the ends of the M1 flatrack must be used.

METRIC SYSTEM

The equipment described herein contains metric components and requires metric, common, and special tools. Metric units and English units will be used throughout this publication.

LINEAR MEASURE

1 Centimeter = 10 Millimeters = 0.01 Meters = 0.3937 Inches
1 Meter = 100 Centimeters = 1000 Millimeters = 39.37 Inches
1 Kilometer = 1000 Meters = 0.621 miles

SQUARE MEASURE

1 Sq Centimeter = 100 Sq Millimeter = 0.155 Sq Inches
1 Sq Meter = 10,000 Sq Centimeter = 10.76 Sq Feet
1 Sq Kilometer = 1,000,00 Sq Meters = 0.386 Sq Miles

WEIGHTS

1 Gram = 0.001 Kilograms = 1000 Milligrams = 0.035 Ounces
1 Kilogram = 1000 Grams = 2.2 Lb
1 Metric Ton = 1000 Kilograms = 1 Megagram = 1.1 Short Tons

METRIC SYSTEM - Continued

CUBIC MEASURE

1 Cu Centimeter = 1000 Cu Millimeters = 0.06 Cu Inches
1 Cu Meter = 1,000,000 Cu Centimeters = 35.31 Cu Feet

LIQUID MEASURE

1 Milliliter = 0.001 Liters = 0.0338 Fluid Ounces
1 Liter = 1000 Milliliters = 33.82 Fluid Ounces

TEMPERATURE

5/9 (°F - 32) = °C
212° Fahrenheit is equivalent to 100° Celsius
90° Fahrenheit is equivalent to 32.2° Celsius
32° Fahrenheit is equivalent to 0° Celsius
9/5 °C + 32 = °F

Table 4.

To Change	To	Multiply By
Inches	Millimeter	25.4
Feet	Meters	0.305
Yards	Meters	0.914
Miles	Kilometers	1.609
Square Inches	Square Centimeters	6.451
Square Feet	Square Meters	0.093
Square Yards	Square Meters	0.836
Square Miles	Square Kilometers	2.590
Acres	Square Hectometers	0.405
Cubic Feet	Cubic Meters	0.028
Cubic Yards	Cubic Meters	0.765

METRIC SYSTEM - Continued

Table 4. - Continued

To Change	To	Multiply By
Fluid Ounces	Milliliters	29.573
Pints	Liters	0.473
Quarts	Liters	0.946
Gallons	Liters	3.785
Ounces	Grams	28.349
Pounds	Kilograms	0.454
Short Tons	Metric Tons	0.907
Pound-Feet	Newton-Meters	1.356
Pounds per Square Inch	Kilopascals	6.895
Pounds per Square Inch	Bar	0.068948
Miles per Gallon	Kilometers per Liter	0.425
Miles per Hour	Kilometers per Hour	1.609

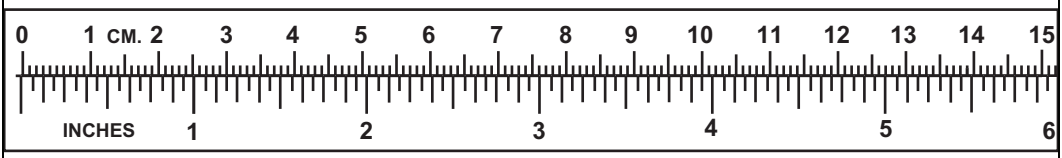

RULER NOT TO SCALE

Figure 1.

Millimeter	Inches	0.0394
Meters	Feet	3.280

METRIC SYSTEM - Continued

Table 4. - Continued

To Change	To	Multiply By
Meters	Yards	1.094
Kilometers	Miles	0.621
Square Centimeters	Square Inches	0.155
Square Meters	Square Feet	10.764
Square Meters	Square Yards	1.196
Square Kilometers	Square Miles	0.386
Square Hectometers	Acres	2.471
Cubic Meters	Cubic Feet	35.315
Cubic Meters	Cubic Yards	1.308
Milliliters	Fluid Ounces	0.034
Liters	Pints	2.113
Liters	Quarts	1.057
Liters	Gallons	0.264
Grams	Ounces	0.035
Kilograms	Pounds	2.205
Metric Tons	Short Tons	1.102
Newton-Meters	Pound-Feet	0.738
Kilopascals	Pounds per Square Inch	0.145
Bar	Pounds per Square Inch	14.504
Kilometers per Liter	Miles per Gallon	2.354

METRIC SYSTEM - Continued

Table 4. - Continued

To Change	To	Multiply By
Kilometers per Hour	Miles per Hour	0.621

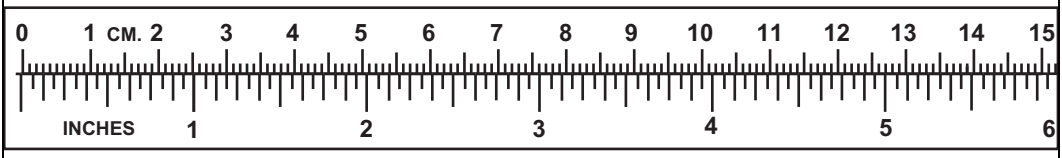

RULER NOT TO SCALE

Figure 2.

END OF WORK PACKAGE

OPERATOR MAINTENANCE
EQUIPMENT DESCRIPTION AND DATA

EQUIPMENT CHARACTERISTICS, CAPABILITIES AND FEATURES

The PLS Trailer carries a flatrack payload of up to 33,000 lbs (14,969 kg). The flatrack is loaded on the trailer using the PLS Load Handling System (LHS).

TRAILER CAPABILITIES

Capable of towing speeds up to 55 mph (88.5 km /h).

TRAILER FEATURES

1. Three axles and six heavy duty tires.
2. Adjustable drawbar.
3. High maneuverability.
4. Onboard air system for operation of air brakes, load locks, and drawbar assist.
5. 12 volt and 24 volt electrical hookups to the tow vehicle.

Location and Description of Major Components

Major components and accessories found on the PLST are illustrated and described below.

Location and Description of Major Components - Continued

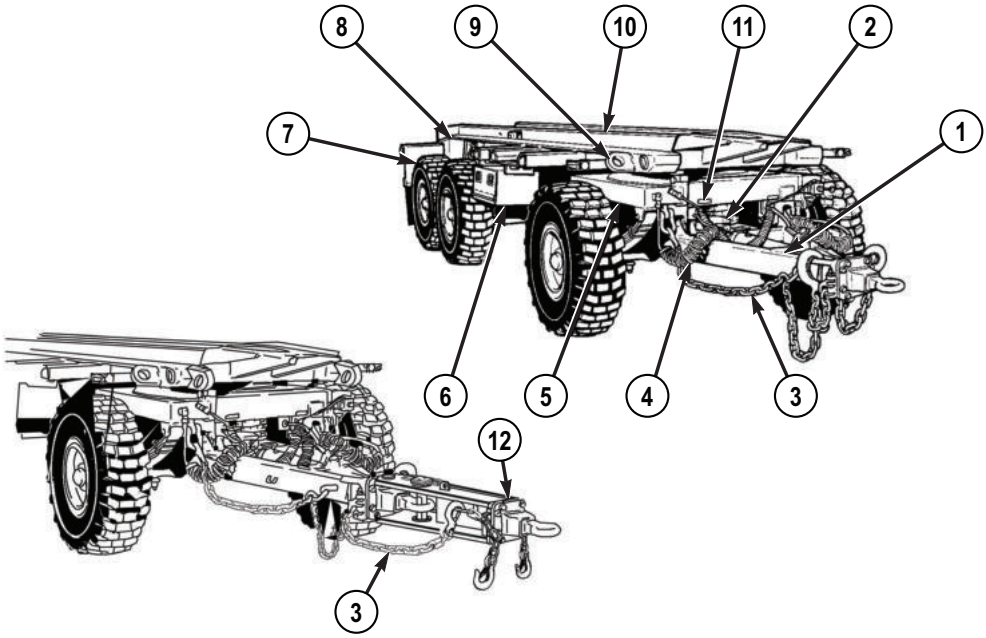

Figure 1.

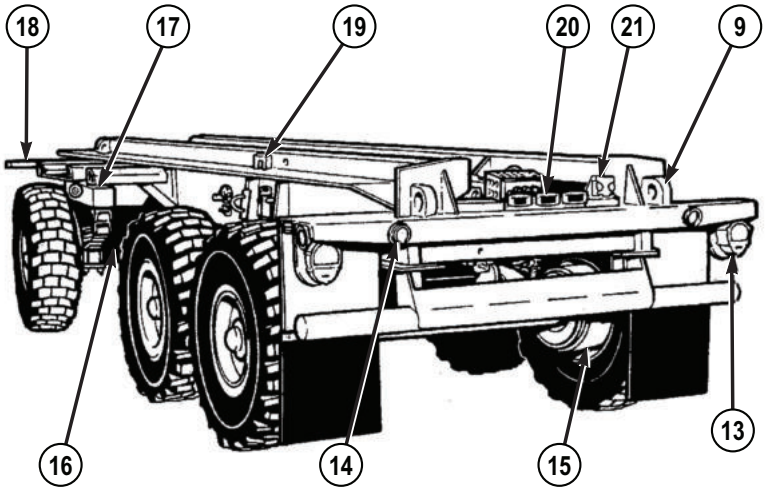

Figure 2.

Location and Description of Major Components - Continued

Item Number	Description	Use
1	DRAWBAR	Provides a simple way to pull and guide the trailer.
2	12V/24V VEHICULAR LIGHTING CONNECTORS	12 and 24 volt adapter connectors provide connectors for the vehicle 12 volt/24 volt system to be hooked to the trailer.
3	SAFETY CHAINS	Provides a safety backup to drawbar.
4	AIR LINES	Provides a means to link air system of vehicle to trailer.
5	TURNTABLE	Provides front axle steering.
6	STOWAGE BOX	Provides a place to store Basic Issue Items.
7	TIRES	Provides excellent cross-country mobility.
8	FRAME	Provides a main support for loads and flatrack.
9	LIFTING EYES	Provides means to lift trailer.
10	GUIDE RAILS	Provides guides for flatrack during loading and unloading.
11	DATA PLATES	Provides information on operation and technical details of the trailer.
12	DRAWBAR EXTENSION	(If equipped). Provides a way to pull and guide trailer during Combat Bridge Transport missions.

Location and Description of Major Components - Continued

Item Number	Description	Use
13	REAR COMBINATION LIGHTS	Provides stop, turn, and blackout lights.
14	REFLECTORS	Provides safety marking.
15	PARKING BRAKES AND SERVICE BRAKES	Provides stopping capability and holds the trailer in place when parked.
16	SPARE TIRE	Provides tire-change capability during mission.
17	LOADING STRUTS	Provides trailer-stacking capability.
18	SIDE MARKER LIGHTS	Provides safety marking to sides.
19	LOAD LOCKS	Provides for locking of flatracks to trailer frame.
20	REAR MARKER LIGHTS	Provides safety marking to the rear.
21	LIGHT BAR ELECTRICAL CONNECTOR	(If equipped). Provides way to provide power to light bar used during Combat Bridge Transport missions.

Equipment Data

Refer to the following tables for specific trailer equipment data and center of gravity data.

Table 1.

Item	Specification
Overall length (excluding drawbar)	269.8 in. (6,853 mm)
Drawbar length	

Equipment Data - Continued

Table 1. - Continued

Item	Specification
Fully extended	88.9 in. (2,258 mm)
Fully extended (equipped with drawbar extension)	124.9 in (3,172 mm)
Fully retracted	64.9 in. (1,648 mm)
Overall width	96 in. (2,438 mm)
Overall height (approximate)	60 in. (1,524 mm)
Deck height	
Unloaded (approximate)	54 in. (1,372 mm)
Loaded (approximate)	51 in. (1,295 mm)
Distance between front and second axle	124.7 in. (3,167 mm)
Distance between second and third axle	50.6 in. (1,285 mm)
Front and rear track	80.5 in. (2,045 mm)
Ground clearance under axles	18.0 in. (457 mm)
Wheel base ground clearance under spare wheel	22.8 in. (579 mm)
Main frame length	226.4 in. (5,751 mm)
Curb weight (includes flatrack and all kits)	16,500 lb (7,484 kg)
Curb weight (includes flatrack, all kits and drawbar extension)	16,925 lb (7,677 kg)
Gross Vehicle Weight (GVW)	49,500 lb (22,453 kg)
Gross Vehicle Weight (GVW) with drawbar extension	49,925 lb (22,646 kg)

Equipment Data - Continued

Table 1. - Continued

Item	Specification
Nominal payload with flatrack	33,000 lb (14,969 kg)
Maximum payload without flatrack and sideboard kit	36,600 lb (16,602 kg)

Table 2.

Item	Specification
Maximum speed	55 mph (88 km/h)
Steering angle of turntable	90 degrees
Side slope with 20 foot ISO container	30 percent
Side slope with EMM	20 percent
Fording depth	48 in. (1,219 mm)

Table 3.

Item	Specification
Voltage	12/24 dual voltage

Table 4.

Item	Specification
Type	Three piece, split style
Quantity	Six
Trailer Spare Wheel Quantity	One
Rim Size	20 by 10

Equipment Data - Continued

Table 4. - Continued

Item	Specification
Stud Quantity Per Wheel	Ten

Table 5.

Item	Specification
Tires	Tubeless
Quantity	Six
Spare Quantity	One
Tread Type	All terrain, non-directional
Size	15.5/80R20 PXL T LRJ

Table 6.

Driving Condition	Front Axle	Rear Tandem
Highway	87 psi (600 kPa)	80 psi (552 kPa)
Cross Country	51 psi (352 kPa)	46 psi (317 kPa)
Mud, Sand, and Snow	32 psi (221 kPa)	29 psi (200 kPa)

Table 7.

Item	Specification
Axle No. 1 Weight Fully Loaded	19,020 lb (8,627 kg)
Axle No. 1 Weight Curb	7,040 lb (3,193 kg)
Axle No. 2 and 3 Weight Fully Loaded	30,480 lb (13,826 kg)
Axle No. 2 and 3 Weight Curb	9,460 lb (4,291 kg)

Equipment Data - Continued

Table 8.

Item	Specification
Actuation	Air
Number of Brake Chambers	Six

Table 9.

Item	Specification
Drawbar:	
Adjustment	Manual, two position
Operation	Air assist

Table 10.

Trailer	Load Class Number
Unloaded	7
Loaded	24

Equipment Data - Continued

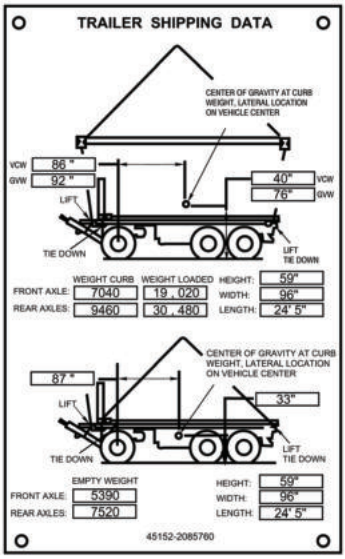

Figure 3.

END OF WORK PACKAGE

OPERATOR MAINTENANCE
THEORY OF OPERATION

SYSTEMS INTRODUCTION

This section provides a basic explanation of major systems on the PLS Trailer.

PALLETIZED LOAD SYSTEM TRAILER (PLST)

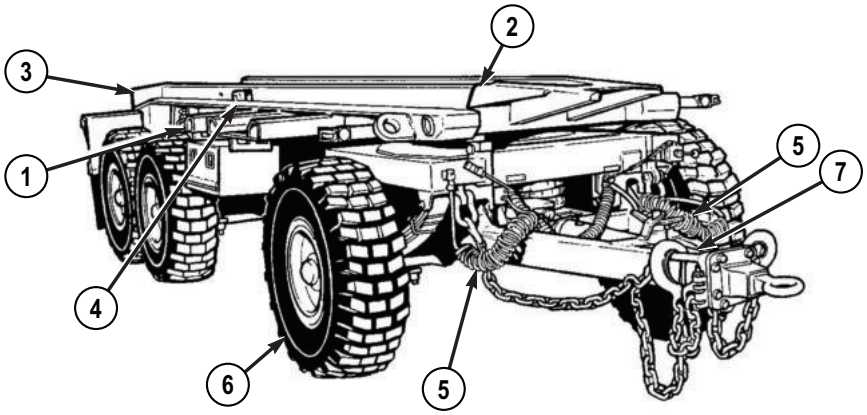

Figure 1.

The Palletized Load System Trailer (PLST) (1) is a three axle trailer designed to carry a Flatrack (FR) with a 33,000 lb (15 metric ton) nominal payload. It can accommodate both full and partial loaded flatracks. Guides (2) laterally position the FR on the trailer rear stops (3) and these locate the longitudinal position of the FR in relation to the PLST. These stops prevent the FR from sliding rearward. A pneumatic locking device (4), located between the frame rails just above the second axle, hooks to engage the lock points and secure the FR to the PLST. An air valve controls the position of the lock hooks. Springs retain the hooks in the locked position. The PLST has a standard 12 volt electrical system with 24 volt military adapters. Also provided are two intervehicular electrical connecting cables (5) of sufficient length to reach the towing vehicle. Two towing eyes, at the rear of the PLST permit towing with a medium-duty tow bar. The spare-tire carrier is behind the first axle (6). The spare-tire is held in place with bolts through the wheel bolt pattern. The spare tire and wheel assembly can be raised and secured in the spare tire carrier by the trailer-provided hand-operated winch. The PLST uses turntable-type steering for tracking and turning and is equipped with a two position adjustable drawbar (7). The PLST is also equipped with an air braking system. All three axles use 16.5 in. diameter by 7 in. wide (419 mm by 178 mm) S-cam brakes. The PLST has a dual brake system with separate service and emergency brake

system. The PLST brake system is activated and charged by the vehicle air supply. The brakes are self-adjusting.

PLST SERVICE BRAKES

The six service brakes on the PLST are powered by 24/20 in. (610/508 mm) brake chambers. Six-inch automatic slack adjusters are provided with all brake chambers. The service brakes are activated when a signal from the foot-operated treadle valve or hand-operated control valve is sent through a series of relay valves. The relay valves convert the proportioned service-brake signal from the vehicle into a regulated service brake chamber pressure.

PLST PARKING BRAKES

Spring-chamber parking brakes are provided on all PLST axles. The application and release of the six PLST spring brakes is controlled by a spring brake control valve. An absence of air pressure in the emergency/spring-brake supply line causes the spring-brake control valve to activate the spring brake. The spring brake control valve also retains air pressure in the PLST air reservoir so the PLST spring brakes can be released by the spring release valve. The spring-brake control valve also prevents compounding of pressures in the brake chamber by relieving the pressure on the spring brake side of the chambers when the spring brakes are set and the service brakes are applied. The PLST spring brake release valve is located on the right front corner of the trailer. This valve releases the PLST spring brakes without a prime mover air supply when there is sufficient air reservoir pressure. After the spring brakes have been released, they can be reapplied by actuating the release valve. When air is supplied through the emergency/spring-brake supply line, the spring release valve is overridden and the trailer spring-brakes are released. If there is insufficient air reservoir pressure to release the trailer parking brakes, a cage nut release is provided on each spring chamber to mechanically release the spring brakes.

PLST EMERGENCY BRAKES

Whenever there is a loss of pressure from the vehicle or PLST air reservoir, the emergency brakes are activated.

PLST MECHANICAL SYSTEM

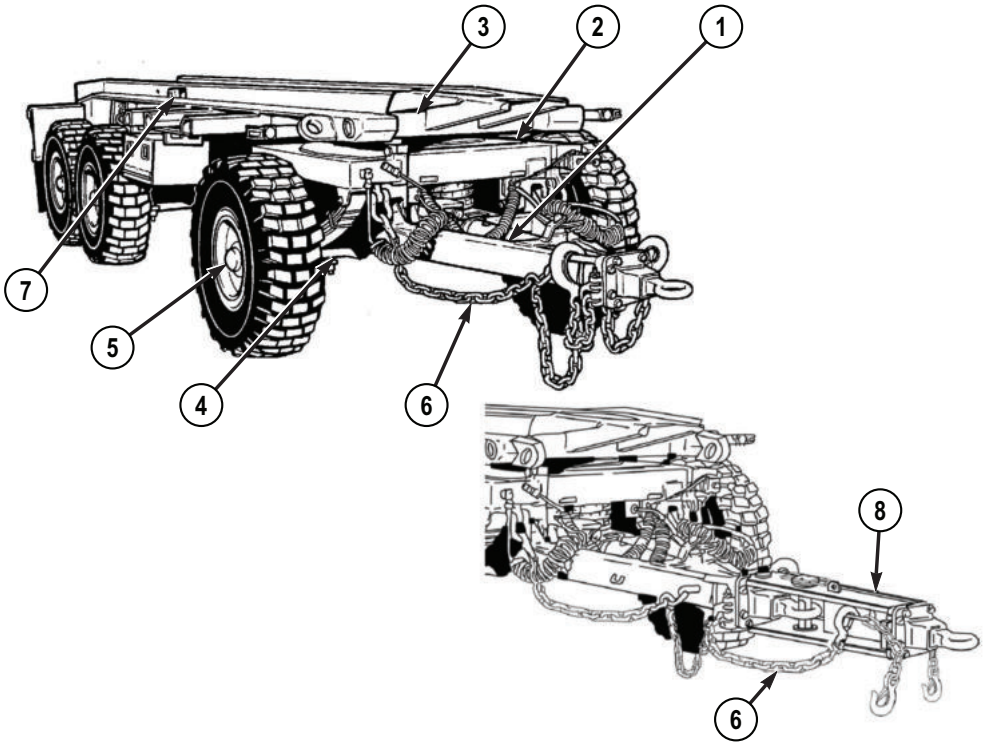

Figure 2.

The drawbar (1) provides a means to tow, steer, and adjust the length of the trailer. The turntable (2) allows the front axle to turn on axis to provide steering. The main frame (3) provides a mounting place for the rest of the systems. Three spring-mounted axles (4) provide a cushioned ride for loads. Spring-operated parking brakes (5) provide safe parking without air pressure. During operation, service brakes provide braking power. Safety chains (6) on the drawbar attach to the tow vehicle as a safety backup. Load locks (7) provide the means to lock the flatrack to the trailer for transport. The drawbar extension (if equipped) (8) provides a means to tow and steer the trailer during Combat Bridge Transport missions (CBT).

PLST ELECTRICAL SYSTEM

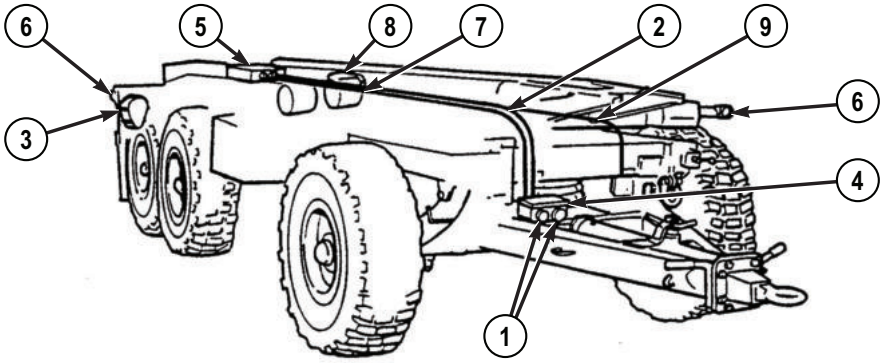

Figure 3.

The intervehicular power hookups (1) (12V and 24V power hookups) allow the operator to hook up the trailer to the towing vehicle in either 12 or 24 volt mode. Wire harnesses (2) route electrical power between electrical components of trailer. The rear combination light (3) provides blackout marker, stop, and signaling capability. The front junction box (4) provides a way of routing electrical harnesses and connecting trailer intervehicular wiring harness to prime the mover. The rear junction box (5) provides a way of routing electrical harnesses to rear of trailer. Front and rear marker lights (6) provide safe side and rear markers for the trailer and allow the operator to observe the trailer during limited visibility. The load-lock sensor (7) sends a signal to the PLS vehicle indicating if load-locks are locked. The load-lock sensor power cable (8) connects the trailer load lock sensor to the vehicle. The light bar power wire harness (if equipped) (9) provides 24 vdc electrical power between electrical components of trailer and external light bar when equipped with drawbar extension.

PLST AIR SYSTEM

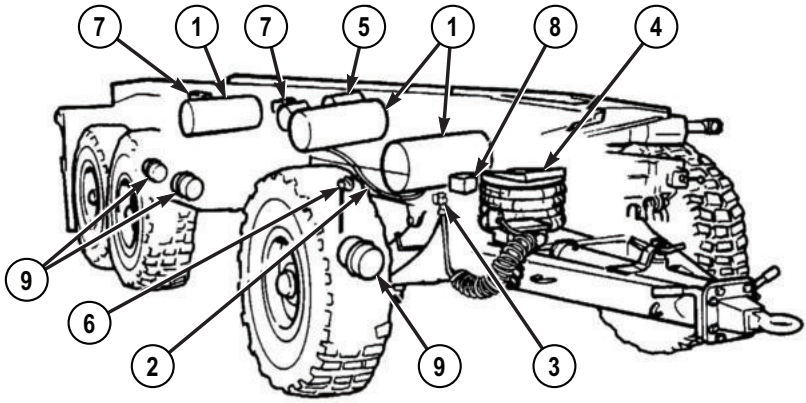

Figure 4.

The air reservoirs (1) provide air pressure storage on the trailer. Air lines (2) route air pressure between air components on the trailer. Air hookups (gladhands) (3) provide a way to hook the trailer air system to the vehicle. The drawbar airbag (4) provides assistance to raise or lower the drawbar. The air chambers (5) provide brake activation/deactivation. The load sensing valve (6) regulates braking power according to load. Relay valves (7) provide brake activation/deactivation. The multifunction valve (8) distributes the correct amount of air pressure between components. The brakes (9) provide stopping capability.

END OF WORK PACKAGE

CHAPTER 2

OPERATOR INSTRUCTIONS

OPERATOR MAINTENANCE
TURNTABLE CONTROLS

CONTROLS AND INDICATORS INTRODUCTION

This section displays the location and describes the use of Turntable Controls, which are used in the operation of PLS series vehicles. Controls and indicators described in this section are the same for all vehicles, except where otherwise indicated.

LOCATION AND USE OF CONTROLS AND INDICATORS

Know the location and proper use of every control and indicator before operating PLS series vehicles. Separate illustrations with keys are provided for learning about Turntable Controls.

Table 1.

Key	Control/ Indicator	Function

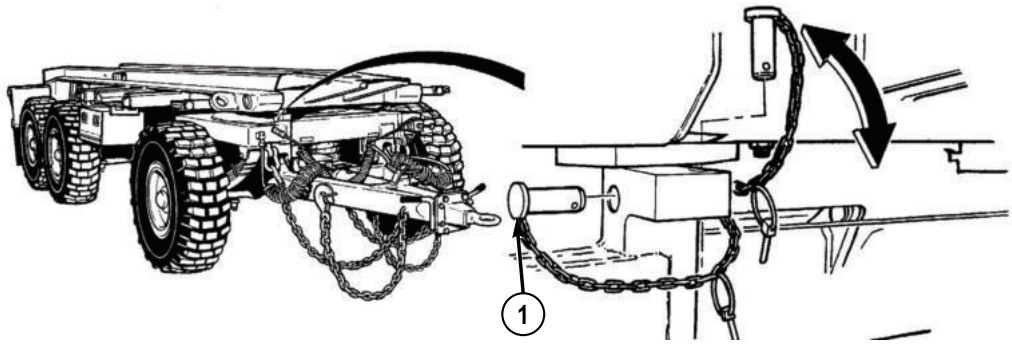

Figure 1.

1	Turntable locking pin	Locks the turntable in place for backing operations.

END OF WORK PACKAGE

OPERATOR MAINTENANCE
DRAWBAR CONTROLS

CONTROLS AND INDICATORS INTRODUCTION

This section displays the location and describes the use of Drawbar Controls, which are used in the operation of PLS series vehicles. Controls and indicators described in this section are the same for all vehicles, except where otherwise indicated.

LOCATION AND USE OF CONTROLS AND INDICATORS

Know the location and proper use of every control and indicator before operating PLS series vehicles. Separate illustrations with keys are provided for learning about Drawbar Controls.

Table 1.

Key	Control/ Indicator	Function

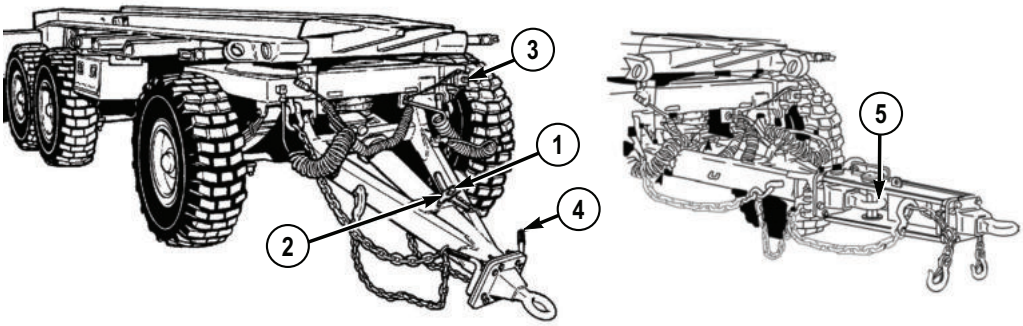

Figure 1.

1	Drawbar Locking Pin	Allows drawbar to be locked in one of two positions.
2	Drawbar Locking Pin Latch	Locks locking pin in position.

Table 1. - Continued

Key	Control/ Indicator	Function
3	Air Assist Control Lever	Provides an air assist to raise or lower the drawbar.
4	Drawbar Lifting Handles	Provide means to lift drawbar.
5	D-Ring Assembly	Provides means to secure drawbar extension in forward position.

END OF WORK PACKAGE

OPERATOR MAINTENANCE
EMERGENCY BRAKE CONTROL

CONTROLS AND INDICATORS INTRODUCTION

This section displays the location and describes the use of Emergency Brake Control which is used in the operation of PLS series vehicles. Controls and indicators described in this section are the same for all vehicles, except where otherwise indicated.

LOCATION AND USE OF CONTROLS AND INDICATORS

Know the location and proper use of every control and indicator before operating PLS series vehicles. Separate illustrations with keys are provided for learning about Emergency Brake Control.

Table 1.

Key	Control/ Indicator	Function

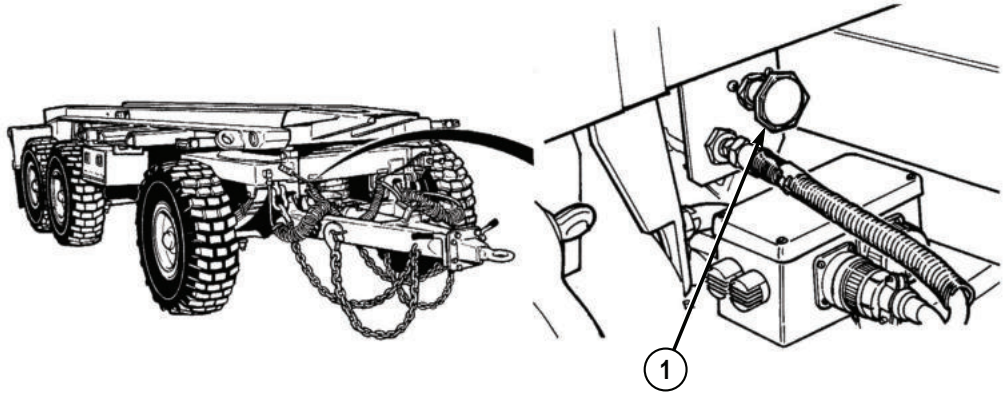

Figure 1.

1	Emergency/ Parking Brake Control	Applies and releases the trailer emergency/parking brakes when trailer is parked or being loaded or unloaded.

END OF WORK PACKAGE

OPERATOR MAINTENANCE
LOAD LOCK CONTROL

CONTROLS AND INDICATORS INTRODUCTION

This section displays the location and describes the use of Load Lock Control which is used in the operation of PLS series vehicles. Controls and indicators described in this section are the same for all vehicles, except where otherwise indicated.

LOCATION AND USE OF CONTROLS AND INDICATORS

Know the location and proper use of every control and indicator before operating PLS series vehicles. Separate illustrations with keys are provided for learning about Load Lock Control.

Table 1.

Key	Control/ Indicator	Function

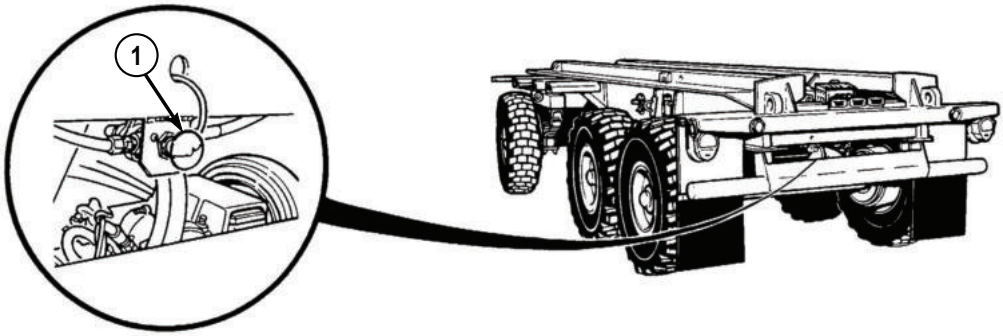

Figure 1.

1	Load Lock Control	Pull to lock load, push to unlock load.

END OF WORK PACKAGE

OPERATOR MAINTENANCE
LOAD LOCK INDICATOR

CONTROLS AND INDICATORS INTRODUCTION

This section displays the location and describes the use of Load Lock Indicator which is used in the operation of PLS series vehicles. Controls and indicators described in this section are the same for all vehicles, except where otherwise indicated.

LOCATION AND USE OF CONTROLS AND INDICATORS

Know the location and proper use of every control and indicator before operating PLS series vehicles. Separate illustrations with keys are provided for learning about Load Lock Indicator.

Table 1.

Key	Control/ Indicator	Function

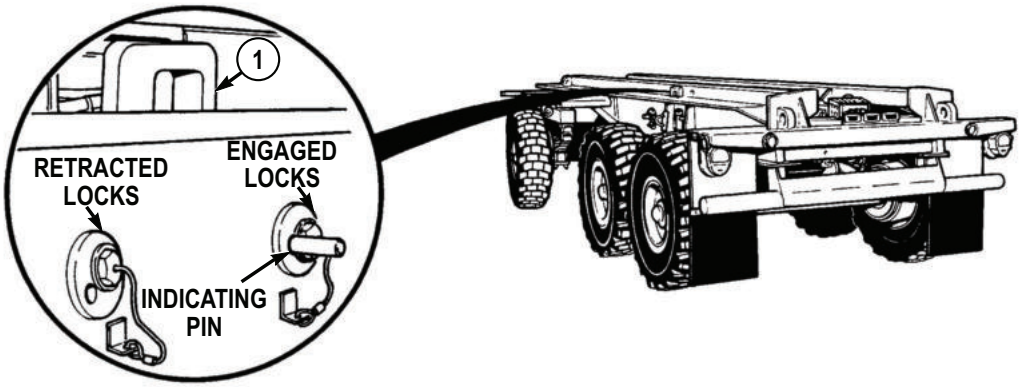

Figure 1.

1	Load Lock Indicator Pins	Give visual indication of weather the load locks are locked or unlocked. If pins are retracted, the load locks are unlocked. If the pins are extended (visible), the load locks are locked.

END OF WORK PACKAGE

OPERATOR MAINTENANCE
PLS TRAILER INSTRUMENTS

INITIAL SETUP:

Not Applicable

PLS TRAILER INSTRUMENTS

The PLS vehicle has two instruments that aid the driver during trailer operations; these are the Air Pressure Gauge and the Load Lock Indicator. For use of these instruments, refer to TM 9-2320-364-10 (WP 0048).

END OF TASK

END OF WORK PACKAGE

OPERATOR MAINTENANCE
TRAILER CONNECT/DISCONNECT

INITIAL SETUP:

Not Applicable

TRAILER CONNECT

WARNING

Do not stand between trailer drawbar and vehicle coupler during hook-up procedures to prevent being pinned between vehicle and trailer. Failure to comply may result in injury or death to personnel.

WARNING

Wheels on trailer must be chocked to prevent trailer from moving during hook-up procedures. Failure to comply may result in injury or death to personnel.

NOTE

Align vehicle coupler with drawbar prior to beginning hookup procedures.

1. Chock wheels of trailer. (WP 0021)
2. Adjust drawbar (1) if necessary. (WP 0011)

TRAILER CONNECT - Continued

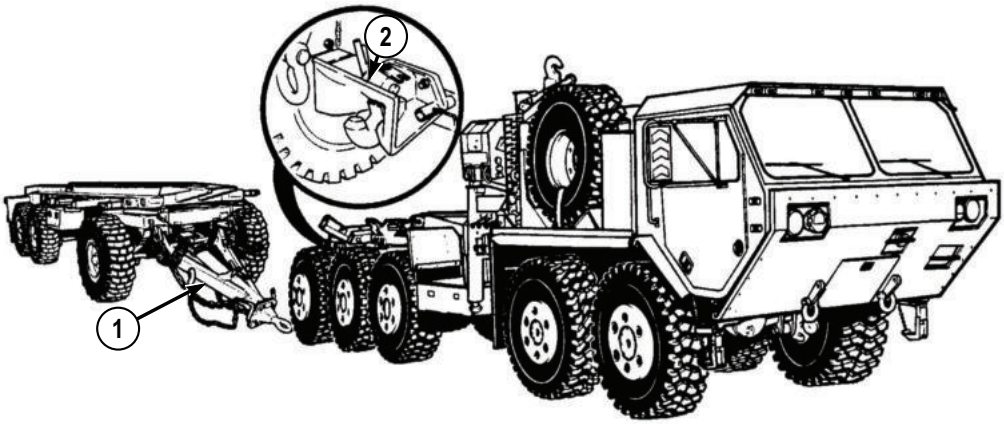

Figure 1.

3. Start vehicle and backup vehicle until coupler (2) is approximately 6 in. (152.4 mm) from end of drawbar (1). Refer to vehicle Operator's manual. (WP 0048)
4. Apply parking brake (3) and place transmission range selector (4), to Neutral (N). Shut OFF engine. Refer to vehicle Operator's manual. (WP 0048)

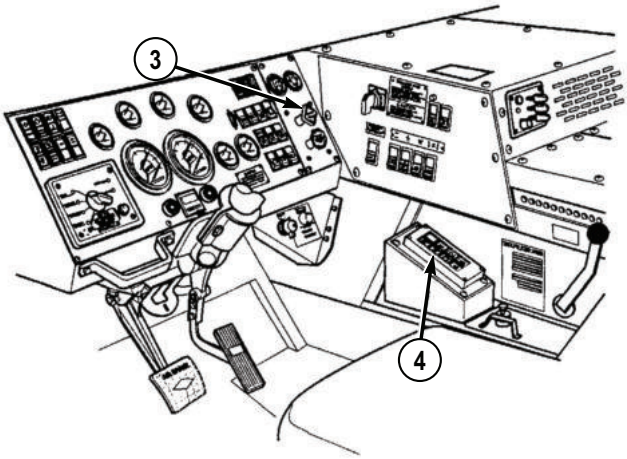

Figure 2.

TRAILER CONNECT - Continued

NOTE

Rotation locking pin should be in locked (UP) position to prevent coupler rotation during hook-up.

5. Lock rotation locking pin (5) on coupler (2).

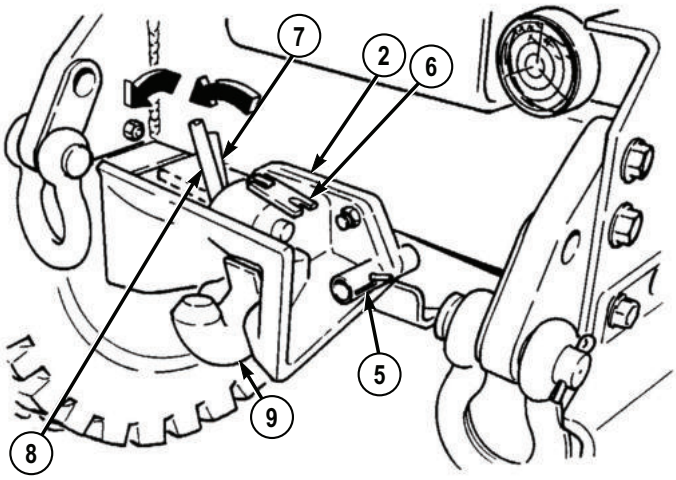

Figure 3.

6. Lift up locking gate (6) on coupler (2).

NOTE

Coupler jaw will drop open when Step (7) is performed correctly.

7. Pull locking lever (7) out and pull lever (8) back at the same time to open coupler jaw (9).

NOTE

Air tank No. 1 must be charged with air for air assist lever to work. If it is not charged, remove the charging hose from the trailer stowage box and perform Steps (8) through (19). If air tank is charged, perform Step (20).

8. Remove cover (10) from air coupling (11).

TRAILER CONNECT - Continued

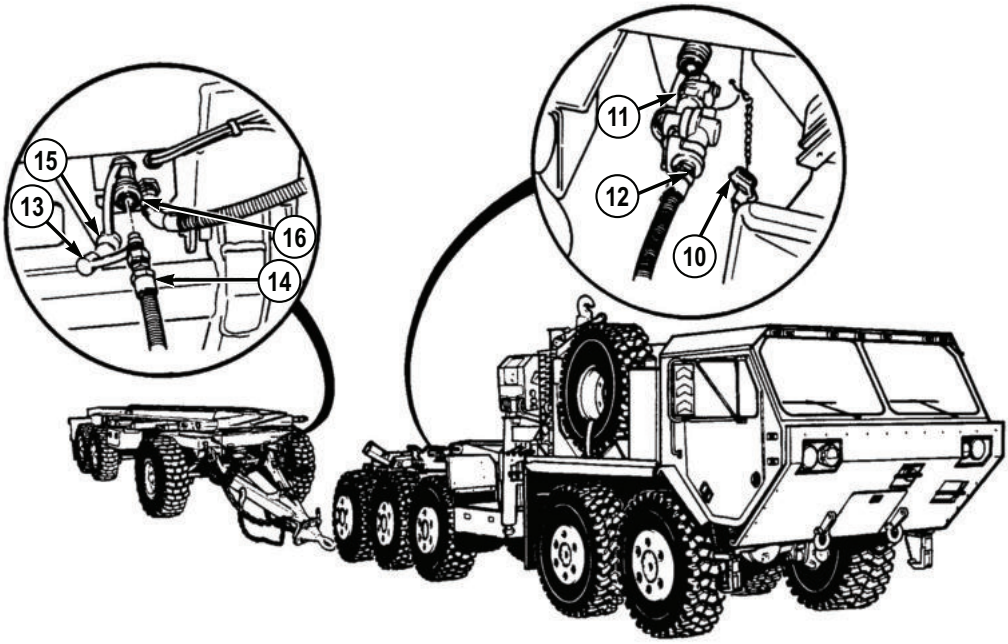

Figure 4.

9. Connect charging hose gladhand (12) to air coupling (11).
10. Remove cover (13) from charging hose connector (14).
11. Remove cover (15) from trailer quick disconnect (16).
12. Connect charging hose connector (14) to trailer quick disconnect (16).
13. Start vehicle, push in trailer air supply valve (17) on dash to charge No. 1 air tank. Refer to vehicle Operator's manual. (WP 0048)

TRAILER CONNECT - Continued

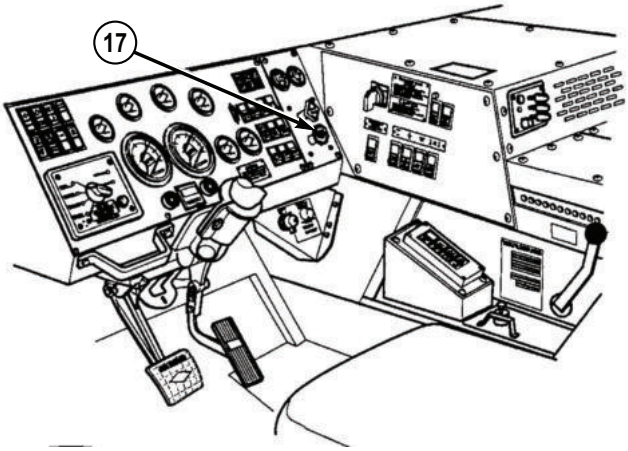

Figure 5.

14. When fully charged (3 to 5 minutes), release trailer air supply valve (17) on dash and shut OFF engine. Refer to vehicle Operator's manual. (WP 0048)
15. Disconnect charging hose connector (14) from trailer quick disconnect (16).

TRAILER CONNECT - Continued

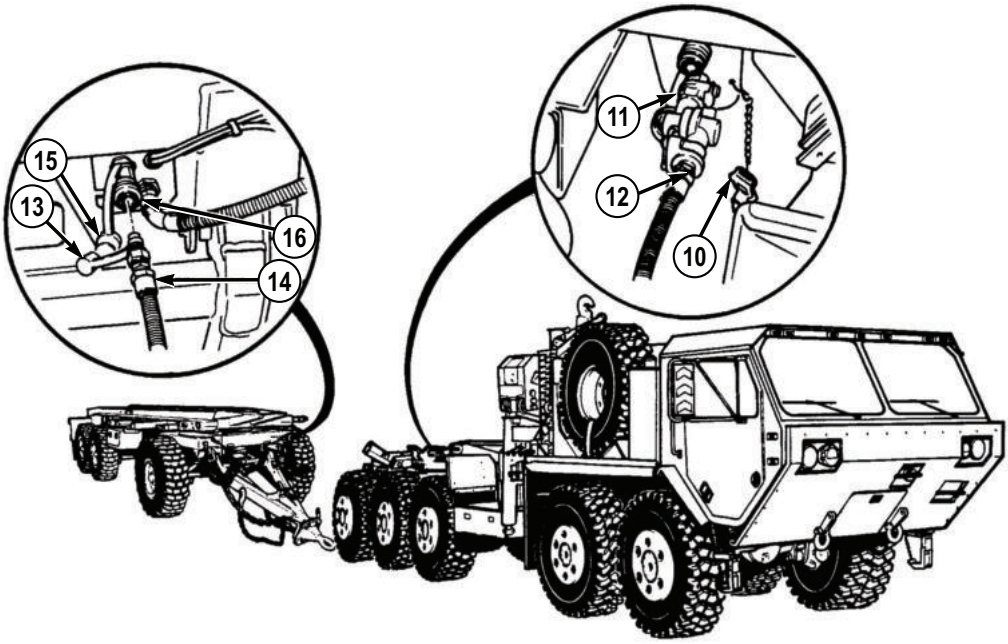

Figure 6.

16. Install cover (15) on trailer quick disconnect (16).
17. Install cover (13) on charging hose connector (14).
18. Disconnect charging hose gladhand (12) from air coupling (11) and stow in stowage box.
19. Install cover (10) on air coupling (11).

WARNING

Drawbar weighs 425 lbs (193 kg), (850 lbs (386 kg) with drawbar extension, if equipped). Drawbar may raise quickly or fall suddenly to the ground when released from coupler. Do not allow feet or body to get under or above drawbar. Failure to comply may result in injury or death to personnel.

TRAILER CONNECT - Continued

NOTE

Move air assist lever UP to raise drawbar and DOWN to lower drawbar.

20. Move air assist lever (18) on drawbar air assist valve (19) to UP position and raise drawbar (1) to level of coupler (2).

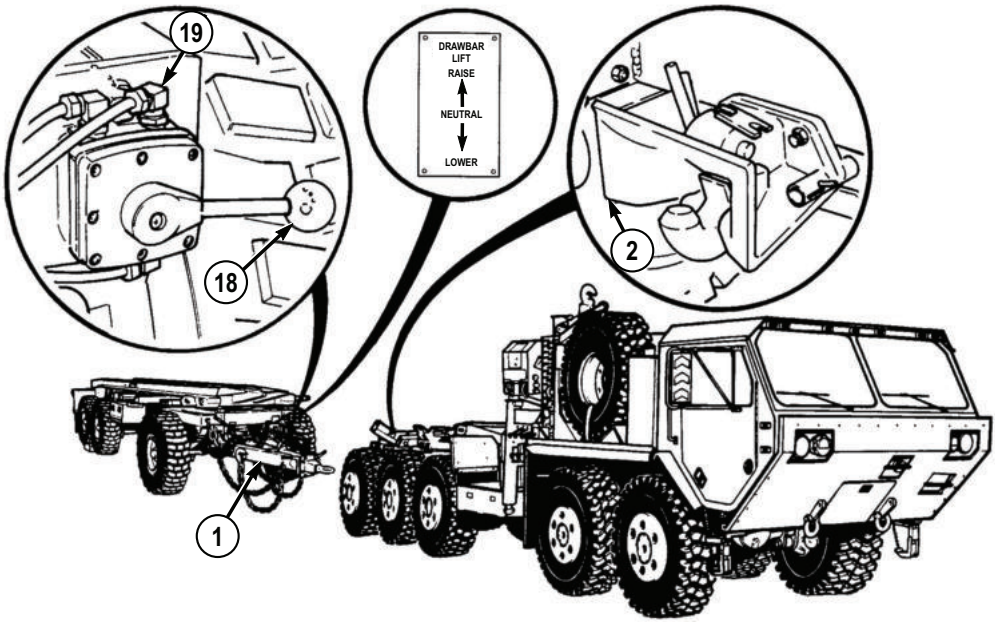

Figure 7.

21. Place air assist lever (18) in Neutral position.

WARNING

Do not stand between trailer drawbar and vehicle coupler during hook-up procedures to prevent being pinned between vehicle and trailer. Failure to comply may result in injury or death to personnel.

TRAILER CONNECT - Continued

WARNING

Wheels on trailer must be chocked to prevent trailer from moving during hook-up procedures. Failure to comply may result in injury or death to personnel.

NOTE

Coupler jaw will close when drawbar makes contact.

22. Start vehicle and slowly back up until drawbar (1) makes contact and locks with coupler (2). Refer to vehicle Operator's manual. (WP 0048)

NOTE

Use trailer hand brake control to apply trailer brakes while pulling vehicle forward.

23. Pull vehicle forward slightly to verify coupler (2) has latched onto drawbar (1).

NOTE

If trailer fails to hook up, repeat Steps (22) and (23).

24. Shut OFF engine. Refer to vehicle Operator's manual. (WP 0048)
25. Release air pressure by moving air assist lever (18) down for 5 seconds.

TRAILER CONNECT - Continued

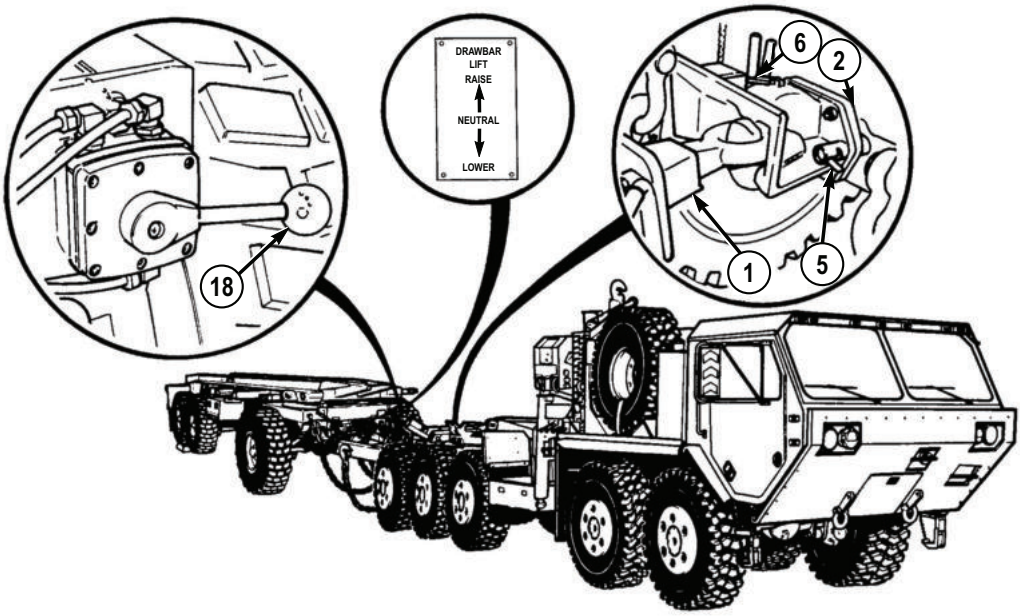

Figure 8.

26. Close locking gate (6) on coupler (2).
27. Unlock rotation locking pin (5) on coupler (2).
28. Remove cover (20) from vehicle receptacle (21).

TRAILER CONNECT - Continued

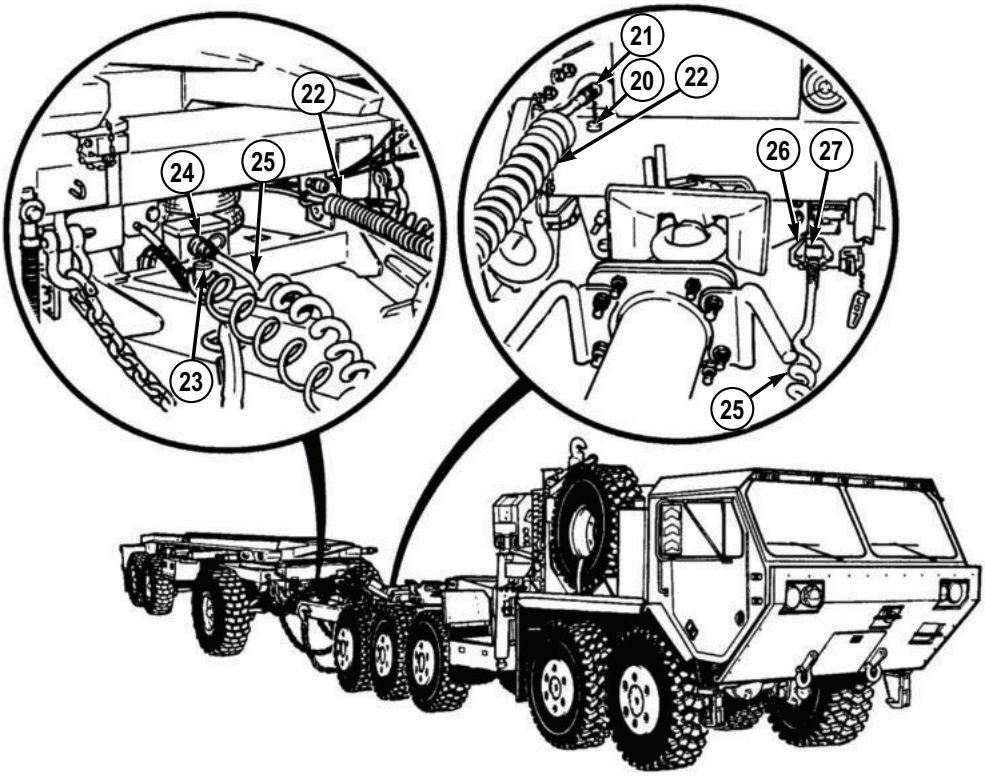

Figure 9.

29. Connect load lock status line (22) to vehicle receptacle (21).

CAUTION

- Both the 12 volt and 24 volt cables must not be connected at the same time. Only one cable can be hooked up during operation or damage to equipment will result.
- Ensure that receptacle latch is engaged on cable or damage to cable may result.

NOTE

- The 12 volt cable is standard for this trailer. Use the 24 volt system only when the 12 volt cable cannot be used or blackout lights are used.
- Perform Steps (30) and (31) for 12 volt system only.

TRAILER CONNECT - Continued

- Cables are located in the stowage box.

30. Remove cover (23) from 7-pin receptacle (24) on trailer and connect 12 volt cable (25) on receptacle (24).
31. Lift receptacle cover (26) on vehicle and connect 12 volt cable (25) on receptacle (27).

NOTE

- Perform Steps (32) and (34) for 24 volt system when not equipped with drawbar extension.
- Perform Steps (33) and (34) for 24 volt system when equipped with drawbar extension assembly.
- Illustration is for 24 volt system when not equipped with drawbar extension.

32. Remove cover (28) from 12-pin receptacle (29) on trailer and connect 24 volt cable (30) on receptacle (29).

TRAILER CONNECT - Continued

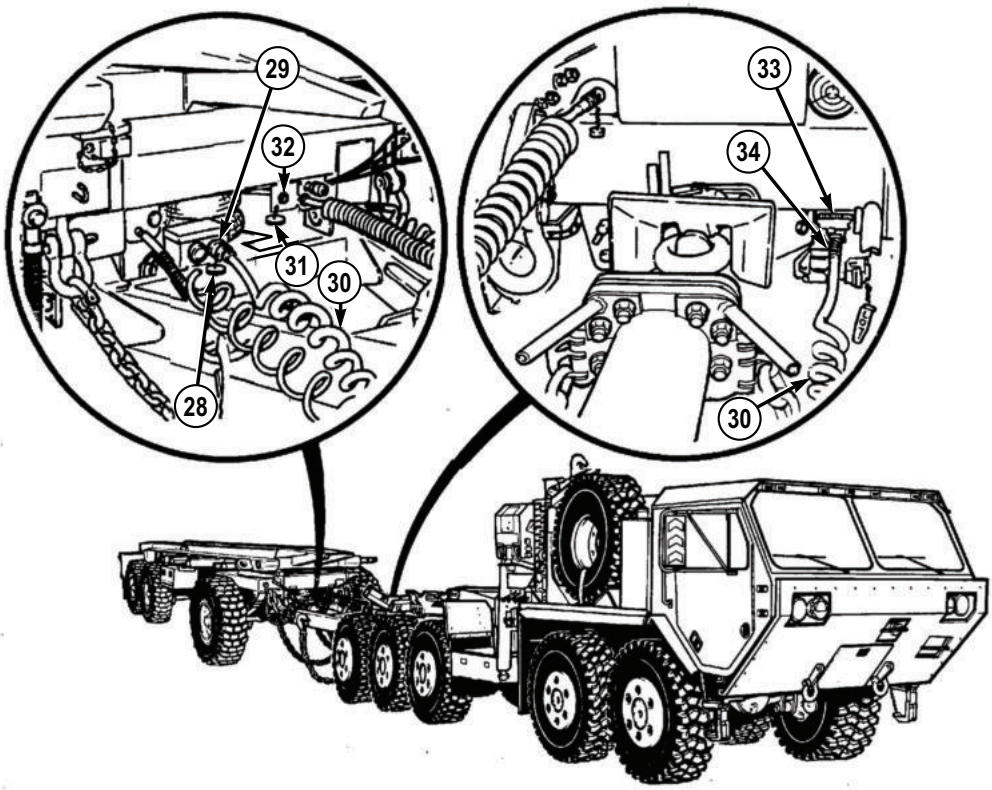

Figure 10.

33. Remove cover (31) from 12-pin receptacle (32) and connect 24 volt cable (30) on receptacle (32).

CAUTION

Ensure that receptacle latch is engaged on cable or damage to cable may result.

34. Lift upper right receptacle cover (33) on the vehicle and connect 24 volt cable (30) on receptacle (34).

35. Remove two covers (10) from air couplings (11) and (35).

TRAILER CONNECT - Continued

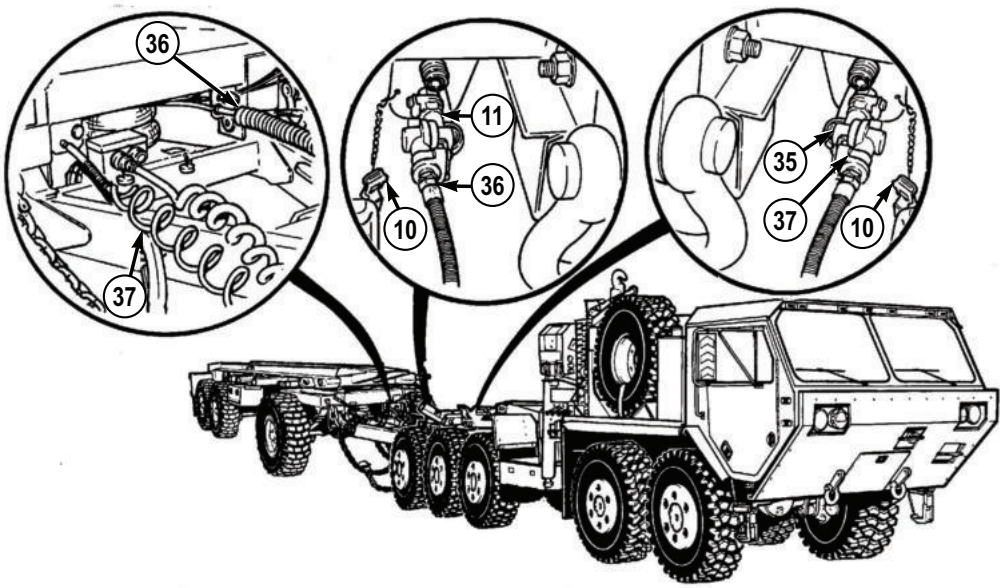

Figure 11.

36. Install emergency air gladhand (36) to air coupling (11).
37. Install service air gladhand (37) to air coupling (35).

NOTE

Safety chains should be already hanging on hooks by the large link.

38. Install safety chains (38) on hooks (39) from large links on chains.

TRAILER CONNECT - Continued

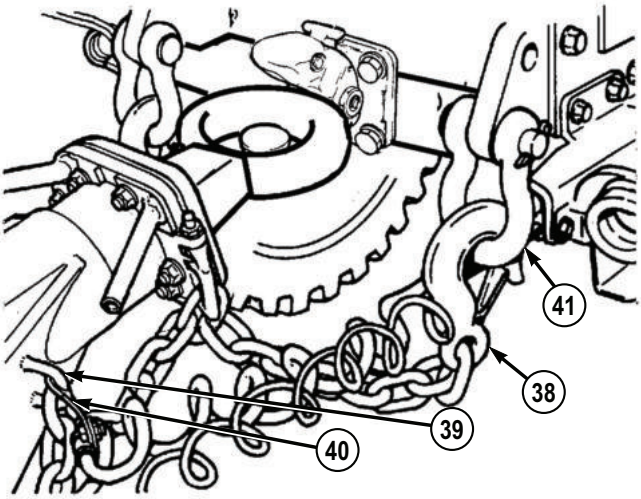

Figure 12.

39. Attach electrical cable brackets (40) to hooks (39) on both sides of drawbar.
40. Unhook two safety chains (38) from trailer and attach to vehicle clevises (41).
41. Remove wheel chocks (WP 0021).

END OF TASK

TRAILER DISCONNECT

WARNING

Do not stand between trailer drawbar and vehicle coupler during hook-up procedures to prevent being pinned between vehicle and trailer. Failure to comply may result in injury or death to personnel.

TRAILER DISCONNECT - Continued

WARNING

Wheels on trailer must be chocked to prevent trailer from moving during hook-up procedures. Failure to comply may result in injury or death to personnel.

1. Chock wheels of trailer (WP 0021).
2. Unhook two safety chains (38) from clevises (41) and attach to trailer.

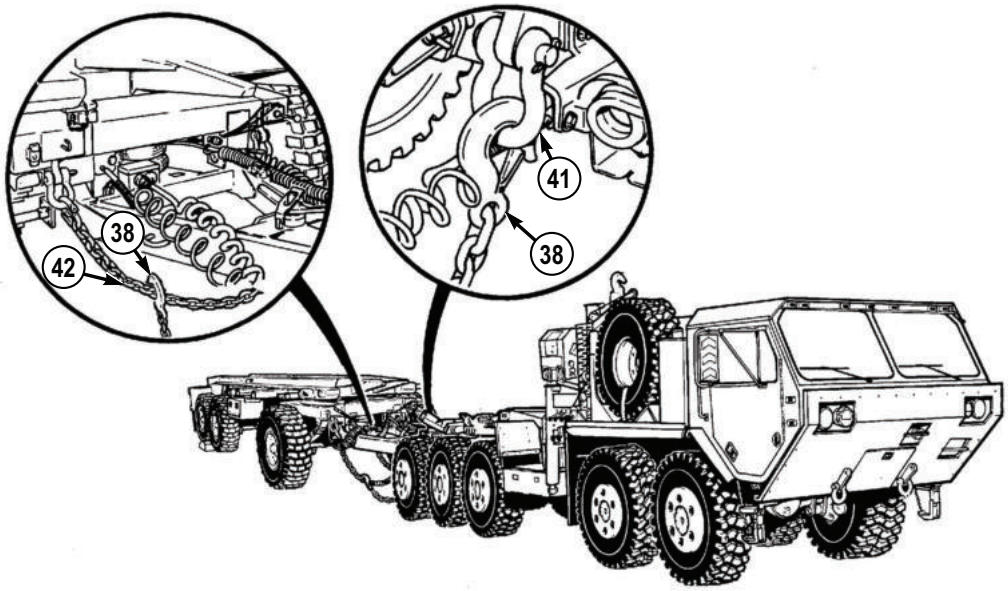

Figure 13.

3. Hook safety chains (38) to chain links (42).
4. Remove emergency air gladhand (36) from air coupling (11) and stow on stowage coupler (43).

TRAILER DISCONNECT - Continued

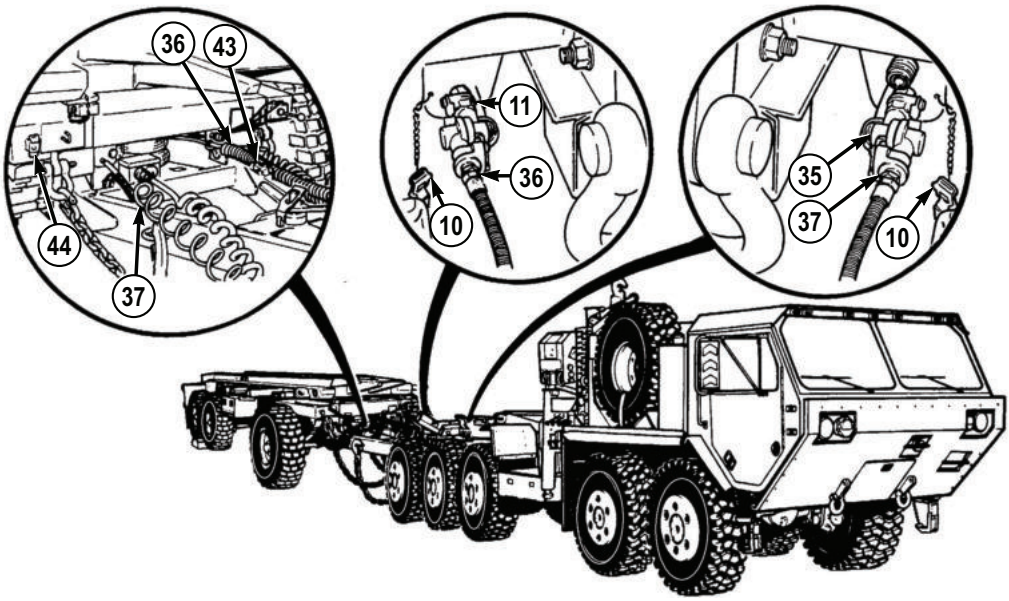

Figure 14.

5. Remove service air gladhand (37) from air coupling (35) and stow on stowage coupler (44).

6. Install covers (10) on air couplings (11) and (35).

CAUTION

Both the 12 volt (7-pin) and 24 volt (12-pin) cables must not be connected at the same time. Only one cable can be hooked up during operation or damage to equipment will result.

NOTE

- Perform Steps (7) and (8) if the 24 volt (12-pin) cable is installed without drawbar extension.
- Perform Steps (7) and (9) if equipped with drawbar extension.
- Perform Steps (11) and (12) if the 12 volt (7-pin) cable is installed.
- Illustration is for 24 volt system when not equipped with drawbar extension.

7. Remove 24 volt cable (30) from receptacle (34) on vehicle and close receptacle cover (33).

TRAILER DISCONNECT - Continued

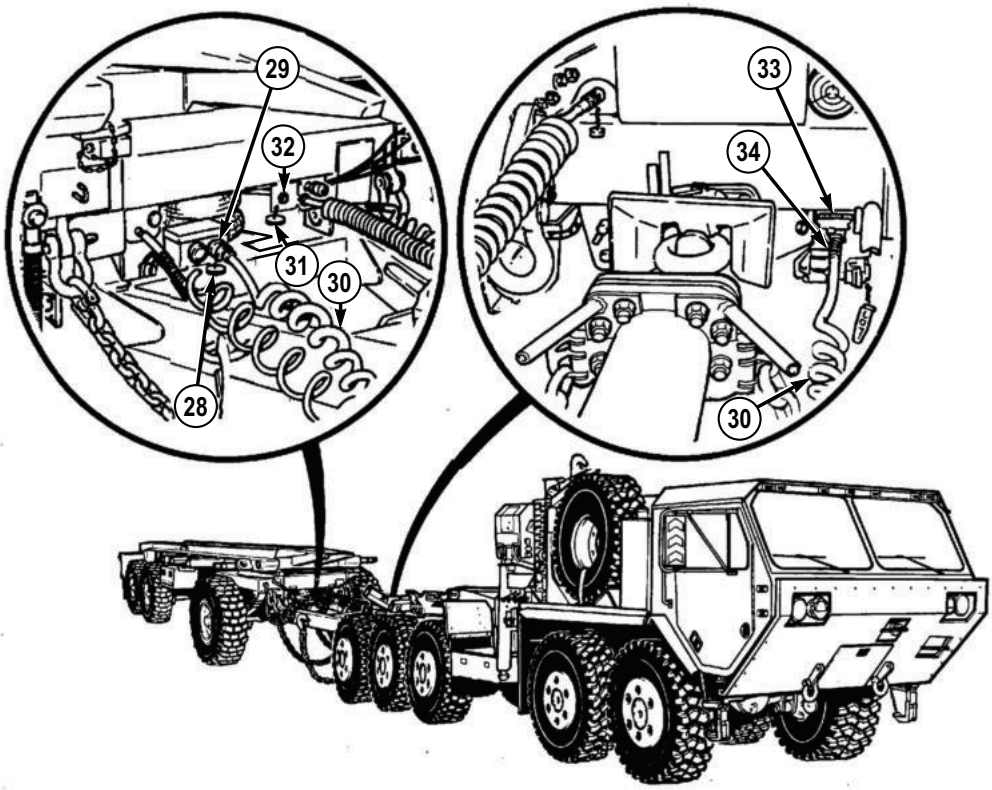

Figure 15.

8. Remove 24 volt cable (30) on trailer from receptacle (29) and install cover (28) on receptacle and stow cable in trailer stowage box.
9. Remove 24 volt cable (30) on trailer from receptacle (32) and install cover (31) on receptacle and stow cable in trailer stowage box.
10. Remove 12 volt cable (25) on vehicle from receptacle (27) and close receptacle cover (26).

TRAILER DISCONNECT - Continued

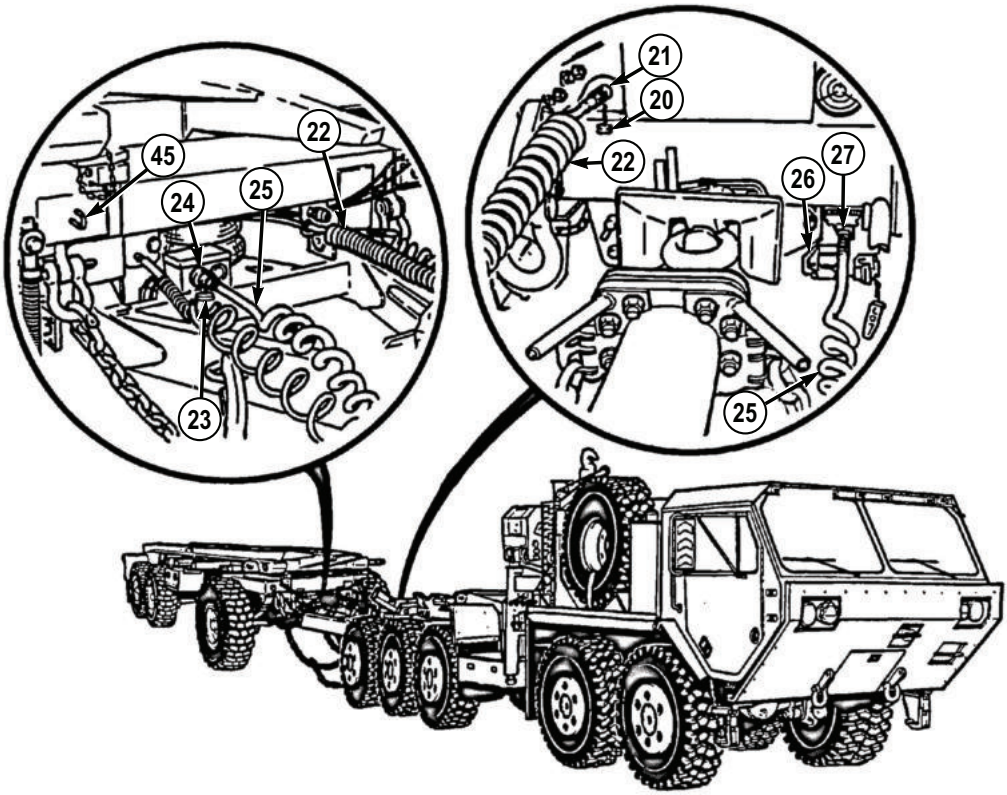

Figure 16.

11. Remove 12 volt cable (25) on trailer from receptacle (24) and install cover (23) on receptacle and stow cable in trailer stowage box.
12. Remove load lock status line (22) from vehicle receptacle (21) and place on stowage hook (45).
13. Install cover (20) to receptacle (21).
14. Lock rotation locking pin (5) and check coupler (2) to make sure it will not rotate.

TRAILER DISCONNECT - Continued

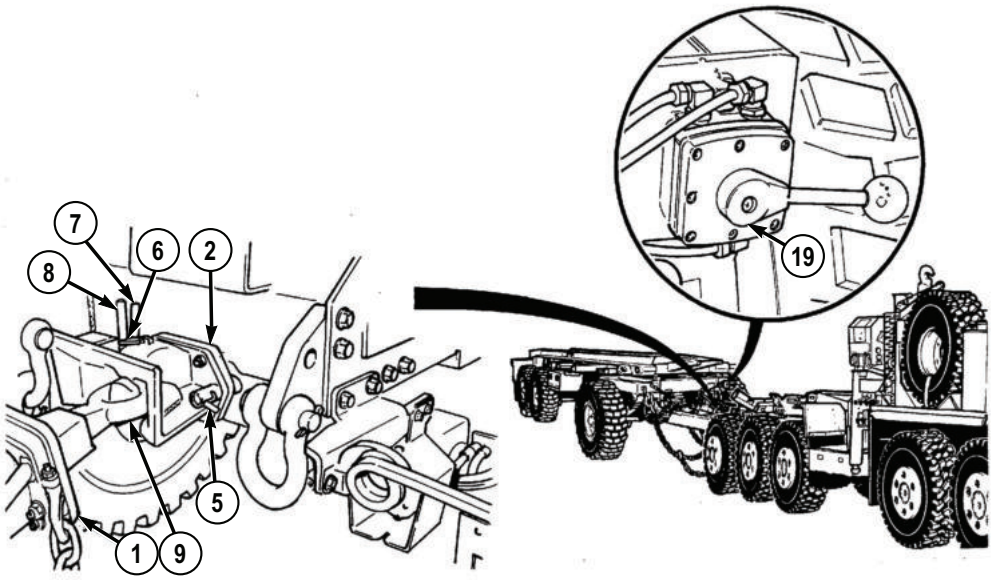

Figure 17.

NOTE

It may be necessary to move vehicle backwards slightly to relieve tension on coupler.

15. Lift up locking gate (6) on coupler (2).
16. Pull locking lever (7) out while pulling lever (8) back at the same time.
17. Release locking lever (7) prior to releasing lever (8) to unlock coupler jaw (9).

WARNING

Drawbar weighs 425 lbs (193 kg), (850 lbs (386 kg) with drawbar extension, if equipped). Drawbar may raise quickly or fall suddenly to the ground when released from coupler. Do not allow feet or body to get under or above drawbar. Failure to comply may result in injury or death to personnel.

TRAILER DISCONNECT - Continued

WARNING

Do not leave drawbar in elevated position after disconnecting from vehicle. Drawbar could fall. Failure to comply may result in injury or death to personnel.

NOTE

Increasing air pressure will raise drawbar, decreasing air pressure will allow drawbar to fall.

18. Use air assist valve (19) to apply air pressure to hold drawbar (1) from falling when released from coupler (2).
19. Start vehicle, release parking brake (3) and slowly pull forward until drawbar (1) releases from coupler (2). Refer to vehicle Operator's manual. (WP 0048)

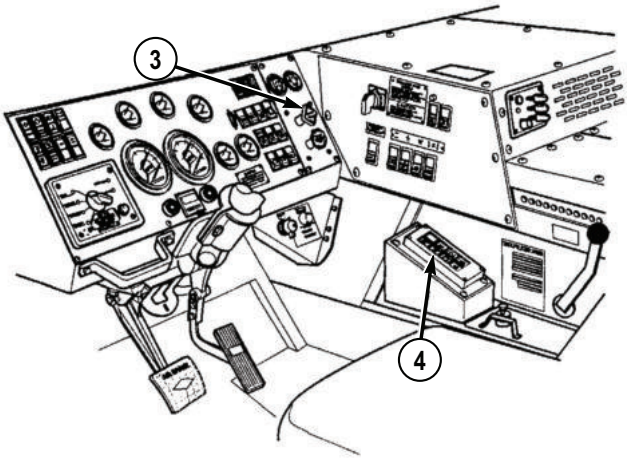

Figure 18.

20. Apply parking brake (3) and place transmission range selector (4) to Neutral (N).
21. Fully lower drawbar.
22. Push up on coupler jaw (9) to close.

TRAILER DISCONNECT - Continued

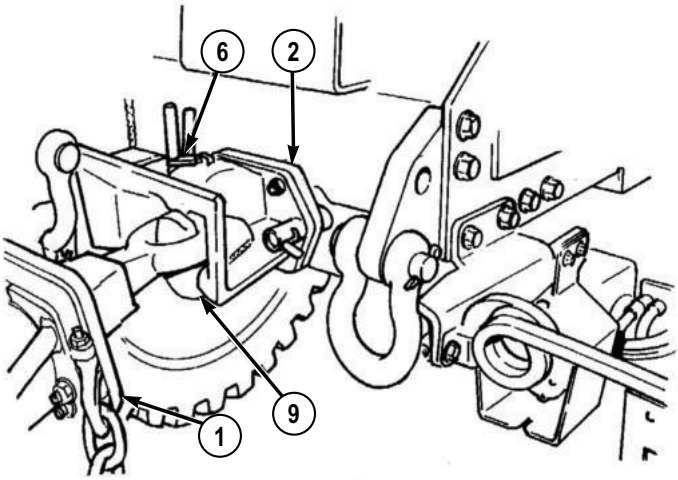

Figure 19.

23. Close locking gate (6) on coupler (2).

END OF TASK

END OF WORK PACKAGE

OPERATOR MAINTENANCE
DRAWBAR ADJUSTMENT

INITIAL SETUP:

Not Applicable

Adjustment

NOTE

The drawbar (without drawbar extension) has only two positions:

- Extended Position (Pulled Out): Must be used for all off road operations only.
- Retracted Position (Pushed In): Must be used for all on road operations only. NO ISO containers on vehicle.
- The drawbar (with drawbar extension) has three positions:
- Drawbar extension kit unstowed, drawbar extended position (Pulled Out): Must be used for all combat bridge transport mission operations.
- Drawbar extension kit stowed, drawbar extended position (Pulled Out): Must be used for all off road non-combat bridge transport missions.
- Drawbar extension kit stowed, drawbar retracted position (Pushed In): Must be used for all on road non-combat bridge transport missions. No ISO containers on vehicle.
- Primary mover (vehicle) may be used to pull out/push in drawbar.

1. If necessary, charge trailer air bag with air (WP 0023).

Adjustment - Continued

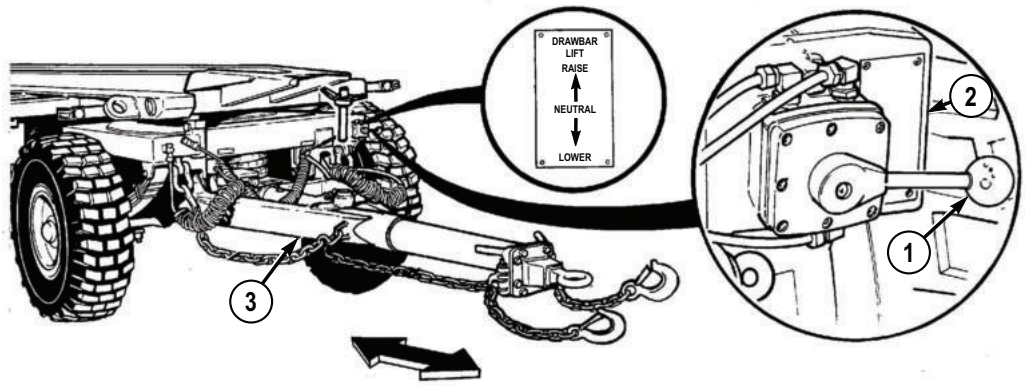

Figure 1.

2. Move air assist lever (1) on drawbar air assist valve (2) to LOWER position and lower drawbar structure (3).

NOTE

- Perform Steps (4) through (9) only if equipped with drawbar extension.
- Ensure drawbar is in level position.

3. Place air assist lever (1) in NEUTRAL position.

NOTE

- Perform Steps (4) through (9) only if equipped with drawbar extension.
- Ensure drawbar is in level position.

4. Lift handle (4) and release safety strap ratchet (5).

Adjustment - Continued

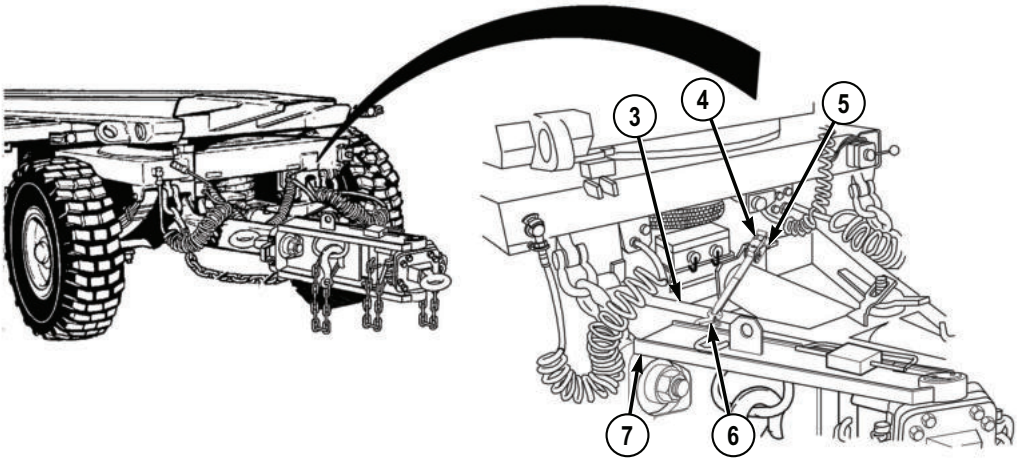

Figure 2.

5. Remove safety strap hook (6) from drawbar extension assembly (7).
6. Attach safety strap hook (6) to drawbar structure (3).
7. Remove lockpin (8) from D-ring assembly lock (9).

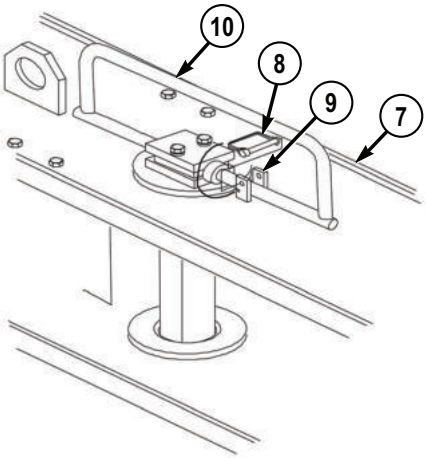

Figure 3.

8. Remove D-ring assembly (10) from drawbar extension assembly (7).
9. Rotate drawbar extension assembly (7) to forward position.

Adjustment - Continued

10. Align holes in drawbar extension assembly (7) with tow ring (11) and install D-ring assembly (10).

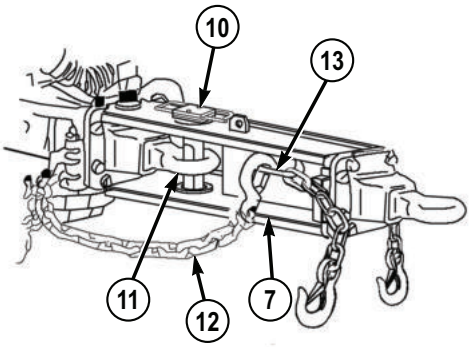

Figure 4.

11. Install lockpin (8) in D-ring assembly lock (9).
12. Unhook two safety chains (12) from trailer and attach to safety chain loop (13) on drawbar extension assembly (7).

WARNING

Drawbar should be in lowered position when removing locking pin. Failure to comply may result in injury or death to personnel.

13. Lift locking gate (14) and remove locking pin (15) from drawbar structure (3).

Adjustment - Continued

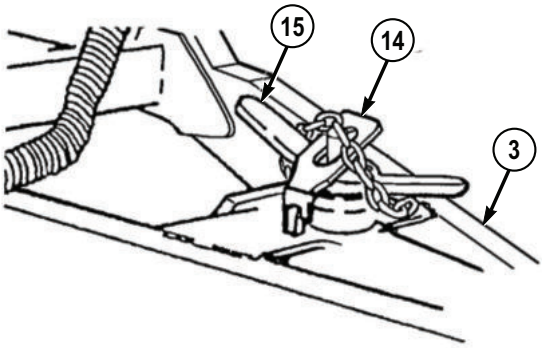

Figure 5.

WARNING

Drawbar weighs 425 lbs (193 kg), (850 lbs (386 kg) with drawbar extension, if equipped). Drawbar may raise quickly or fall suddenly to the ground when released from coupler. Do not allow feet or body to get under or above drawbar. Failure to comply may result in injury or death to personnel.

14. Move air assist lever (1) to RAISE position and raise drawbar structure (3) to level position.

Adjustment - Continued

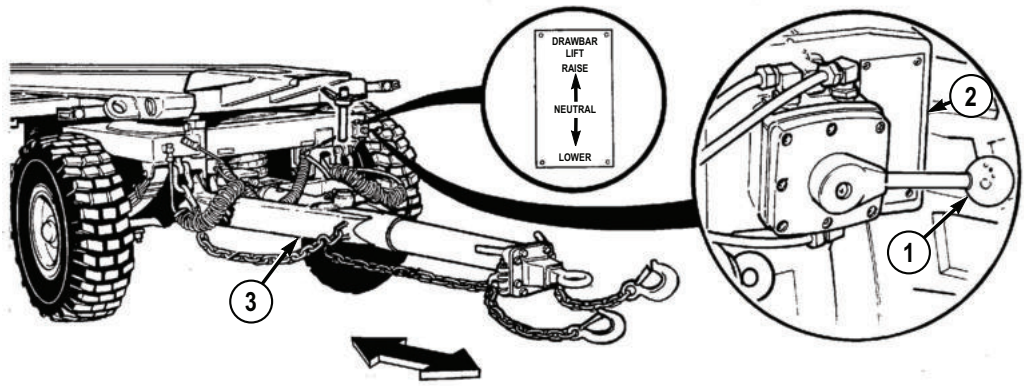

Figure 6.

15. Place air assist lever (1) in NEUTRAL position.

WARNING

Do not stand between trailer drawbar and vehicle coupler during hook-up procedures to prevent being pinned between vehicle and trailer. Failure to comply may result in injury or death to personnel.

WARNING

Wheels on trailer must be chocked to prevent trailer from moving during hook-up procedures. Failure to comply may result in injury or death to personnel.

NOTE

Primary mover (vehicle) may be used to pull out/push in drawbar.

16. Slide tube assembly (16) in or out of drawbar structure (3) to desired position.

Adjustment - Continued

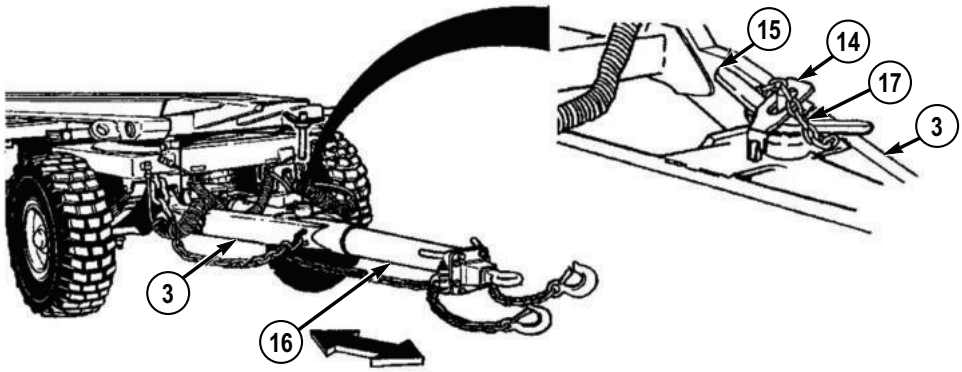

Figure 7.

17. Align holes in tube assembly (16) and drawbar structure (3) and install locking pin (15) into drawbar structure (3).
18. Close locking gate (14) over locking pin (15) on drawbar structure (3).

NOTE

Locking pin chain is used to keep locking gate in LOCKED position during trailer operation.

19. Position locking pin chain (17) over locking gate (14) and around locking pin (15).

WARNING

Drawbar weighs 425 lbs (193 kg), (850 lbs (386 kg) with drawbar extension, if equipped). Drawbar may raise quickly or fall suddenly to the ground when released from coupler. Do not allow feet or body to get under or above drawbar. Failure to comply may result in injury or death to personnel.

NOTE

Perform Steps (21) through (28) if equipped with drawbar extension.

Adjustment - Continued

20. Unhook two safety chains (12) from safety chain loop (13) on drawbar extension assembly (7) and attach to drawbar structure (3).

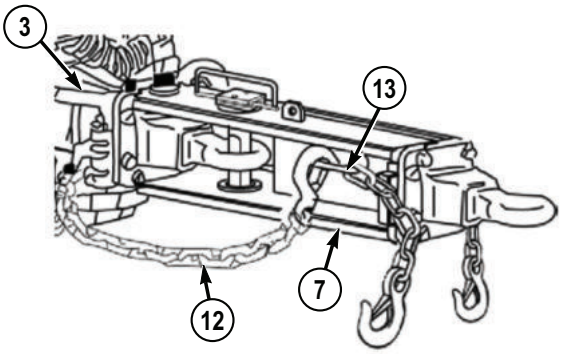

Figure 8.

21. Remove lockpin (8) from D-ring assembly lock (9).

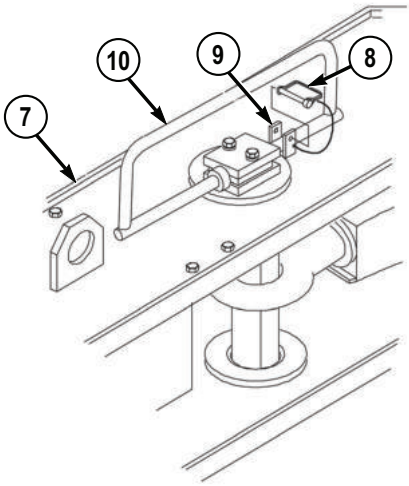

Figure 9.

22. Remove D-ring assembly (10) from drawbar extension assembly (7).
23. Rotate drawbar extension assembly (7) to stowed position.

Adjustment - Continued

24. Install D-ring assembly (10) in drawbar extension assembly (7).
25. Install lockpin (8) in D-ring assembly lock (9).
26. Remove safety strap hook (6) from drawbar structure (3).

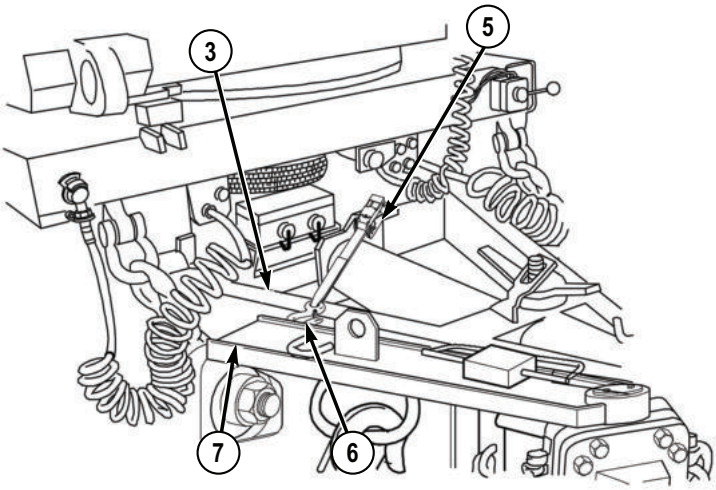

Figure 10.

27. Attach safety strap hook (6) to drawbar extension assembly (7).
28. Tighten safety strap ratchet (5).

END OF TASK

END OF WORK PACKAGE

OPERATOR MAINTENANCE
TRAILER CONNECT/DISCONNECT TO VEHICLE OTHER THAN PLS

INITIAL SETUP:

Not Applicable

TRAILER CONNECT

WARNING

Drawbar weighs 425 lbs (193 kg), (850 lbs (386 kg) with drawbar extension, if equipped). Drawbar may raise quickly or fall suddenly to the ground when released from coupler. Do not allow feet or body to get under or above drawbar. Failure to comply may result in injury or death to personnel.

WARNING

Do not stand between trailer drawbar and vehicle coupler during hook-up procedures to prevent being pinned between vehicle and trailer. Failure to comply may result in injury or death to personnel.

TRAILER CONNECT - Continued

WARNING

Wheels on trailer must be chocked to prevent trailer from moving during hook-up procedures. Failure to comply may result in injury or death to personnel.

CAUTION

Trailer drawbar must be in extended position when trailer is to be towed by another vehicle other than a PLS vehicle. Failure to extend drawbar may cause severe damage to trailer and towing vehicle.

1. Adjust drawbar to extended position (WP 0011) with drawbars without extension kit or drawbars with extension kit stowed.
2. Chock wheels of trailer (WP 0021).
3. Back up vehicle until coupler (1) is approximately 6.0 in. (152.4 mm) from trailer drawbar (2).

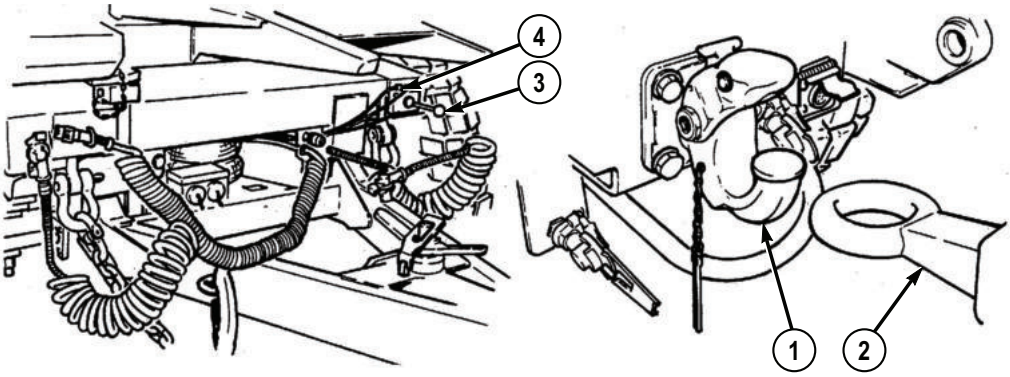

Figure 1.

4. Refer to applicable operator manual and set vehicle parking brakes and set transmission to Neutral (N).

NOTE

- Trailer air bag must be charged with air for air assist lever to work.

TRAILER CONNECT - Continued

- Move air assist lever up to raise drawbar and down to lower drawbar.
- Retract drawbar prior to lifting drawbar with air assist.

5. If necessary, charge trailer air bag air using trailer BII quick disconnect charging hose (WP 0023)or using standard air line hookup.

NOTE

With drawbar extension kit installed, drawbar must be in retracted position (Pushed In) in order for air assist to lift drawbar to level of coupler.

6. Move air assist lever (3) on drawbar air assist valve (4) to UP position and raise drawbar (2) to level of coupler (1).
7. Place air assist lever (3) in NEUTRAL position.
8. Place drawbar ring (5) in coupler (1) and push coupler latch (6) down until it is latched in place.

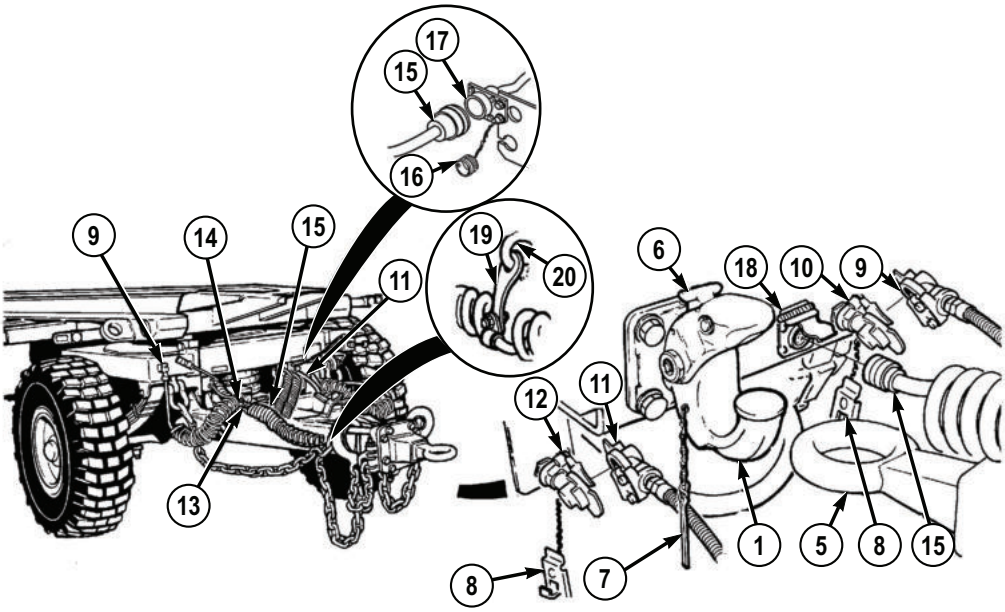

Figure 2.

9. Install cotter pin (7) in coupler (1) and slightly bend cotter pin.
10. If applicable, remove covers (8) and connect service air gladhand (9) to service gladhand (10) on vehicle and connect emergency air gladhand (11) to emergency air gladhand (12) on vehicle.

TRAILER CONNECT - Continued

CAUTION

Both the 12 volt (7-pin) and 24 volt (12-pin) cables must not be connected at the same time. Only one cable can be hooked up during operation or damage to equipment will result.

NOTE

- The 12 volt cable is standard for this trailer. Use the 24 volt system cable only when the 12 volt cable cannot be used or blackout lights are used.
- Cables are located in the stowage box.
- Perform Step (11) when connecting 12 vdc cable on either drawbar assembly.
- Perform Step (11) when connecting 24 vdc cable on trailer without drawbar extension.
- Perform Step (12) when connecting 24 vdc cable if equipped with drawbar extension.

11. Remove cover (13) from proper receptacle (14) on trailer and connect cable (15) to receptacle (14).
12. Remove cover (16) and connect cable (15) to receptacle (17).

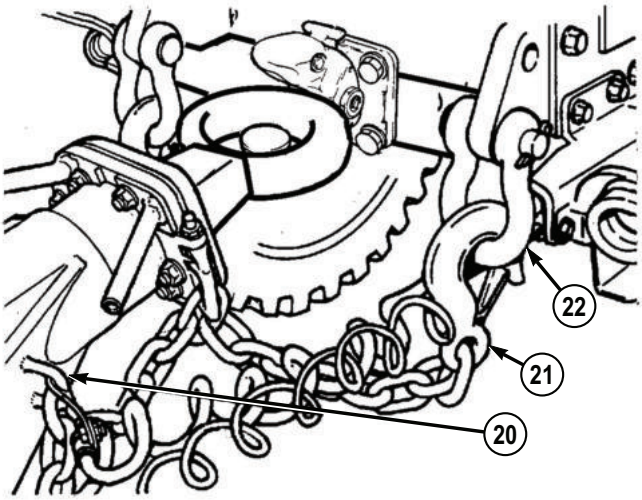

Figure 3.

13. Connect cable (15) to receptacle (18) on vehicle.

TRAILER CONNECT - Continued

14. Attach electrical cable brackets (19) to hooks (20) on drawbar.

NOTE

Safety chains should be already hanging on hooks by the large link.

15. Install safety chains (21) on hooks (20) from large links on chains.

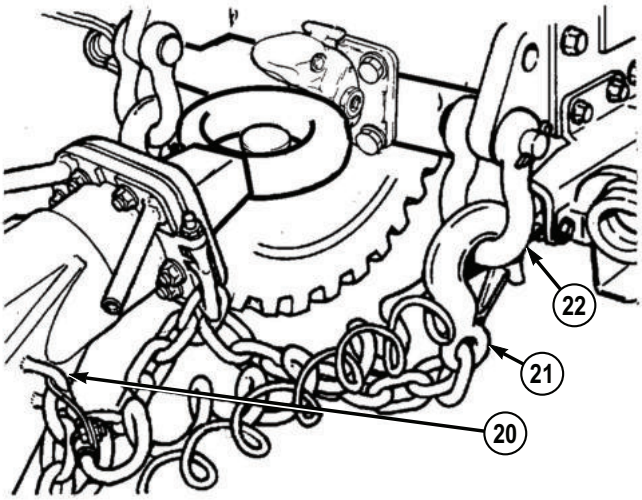

Figure 4.

16. Unhook two safety chains (21) from trailer and attach to vehicle clevises (22).
17. Using primary mover (vehicle), pull out drawbar to extended position (Pulled Out), if extension drawbar kit is installed and unstowed. (WP 0011)
18. Remove wheel chocks.

END OF TASK

TRAILER DISCONNECT

1. To disconnect trailer from vehicle, chock trailer wheels (WP 0021).

TRAILER DISCONNECT - Continued

WARNING

Do not stand between trailer drawbar and vehicle coupler during hook-up procedures to prevent being pinned between vehicle and trailer. Failure to comply may result in injury or death to personnel.

WARNING

Wheels on trailer must be chocked to prevent trailer from moving during hook-up procedures. Failure to comply may result in injury or death to personnel.

2. Unhook two safety chains (21) from clevises (22) and attach to trailer.

TRAILER DISCONNECT - Continued

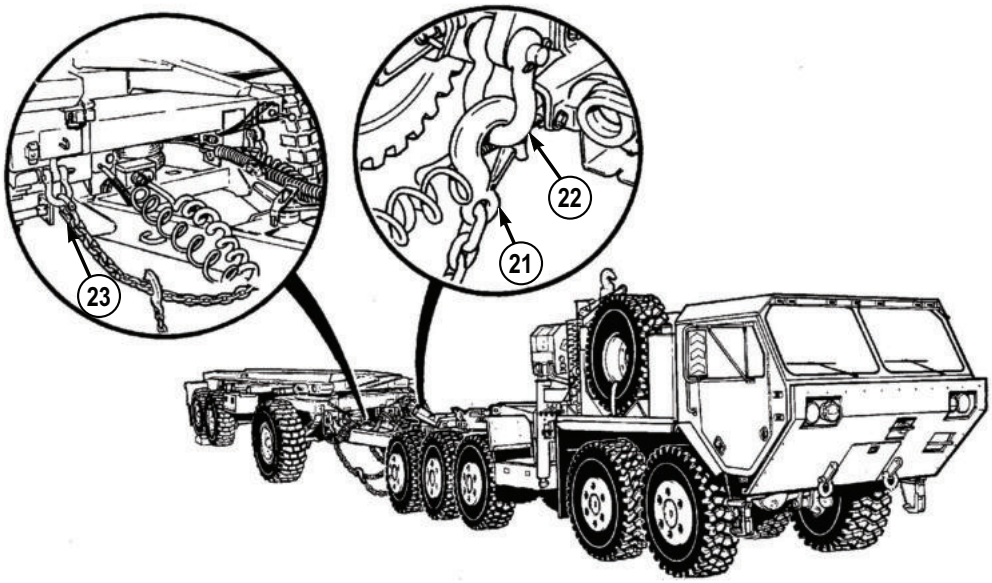

Figure 5.

3. Hook safety chain (21) to chain links (23).

NOTE

- Perform Step (5) when disconnecting 24 vdc cable if equipped with drawbar extension.
- Perform Step (6) when disconnecting 24 vdc cable on trailer without drawbar extension.
- Perform Step (6) when disconnecting 12 vdc cable on either drawbar assembly.

4. Disconnect cable (15) from receptacle (18) on vehicle.

TRAILER DISCONNECT - Continued

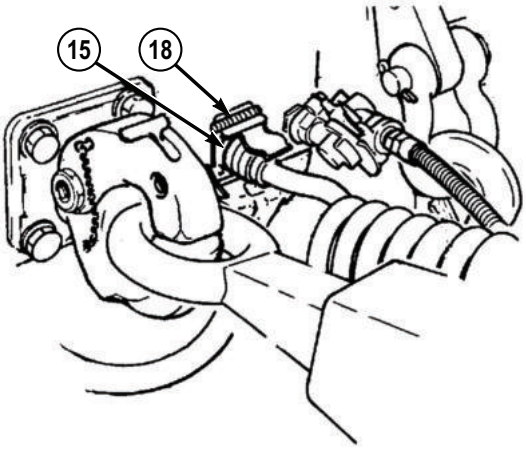

Figure 6.

5. Disconnect cable (15) from receptacle (17) on trailer and install cover (16).

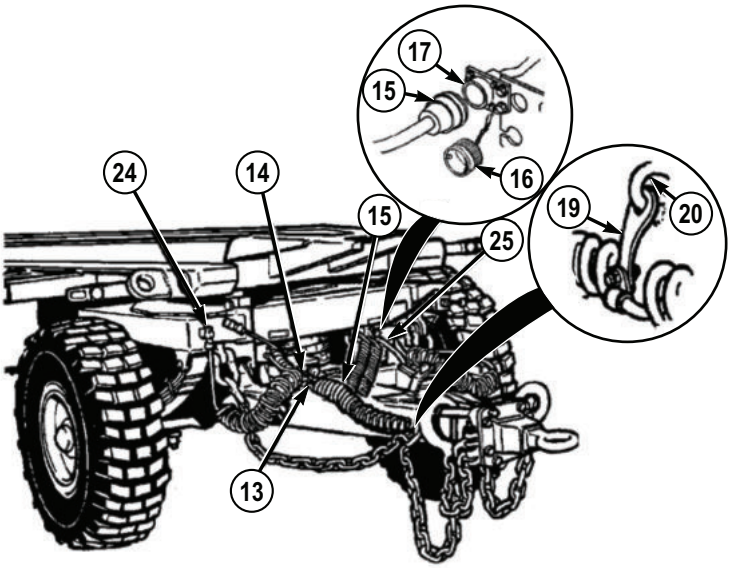

Figure 7.

6. Disconnect cable (15) from receptacle (14) on trailer and install cover (13).

TRAILER DISCONNECT - Continued

7. Remove electrical cable brackets (19) from hooks (20) on drawbar.
8. Disconnect emergency air gladhand (11) from emergency air gladhand (12) on vehicle and stow on stowage coupler (24).

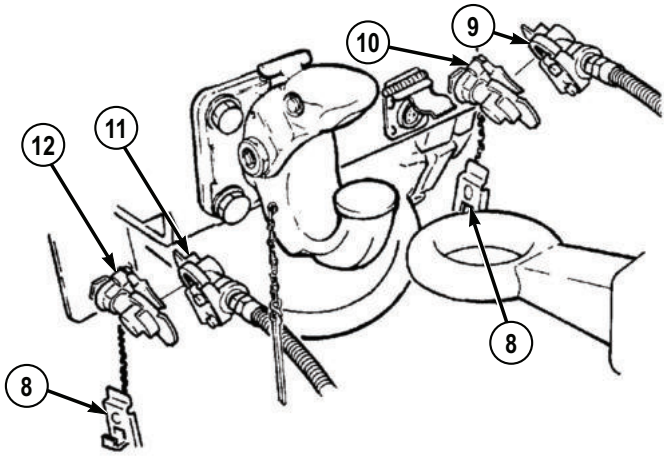

Figure 8.

9. Disconnect service air gladhand (9) from service air gladhand (10) on vehicle and stow on stowage coupler (25).
10. Replace covers (8) to gladhands (12) and (10).
11. Remove cotter pin (7) from coupler latch (6).

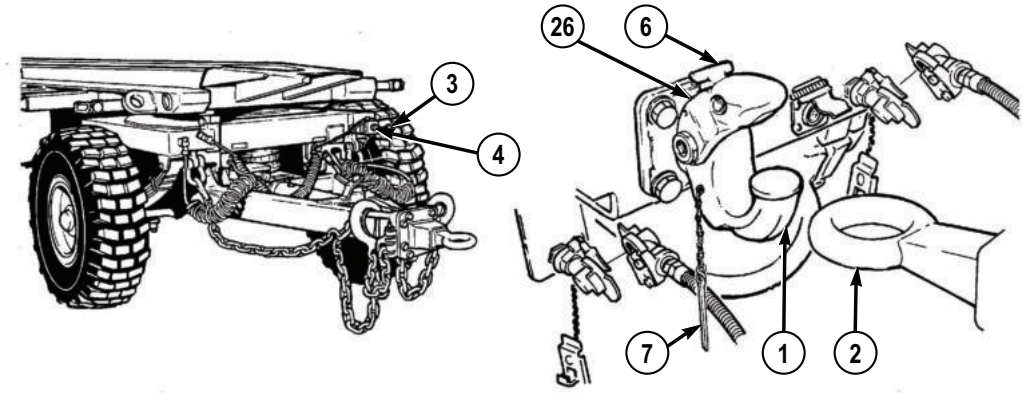

Figure 9.

TRAILER DISCONNECT - Continued

12. Pull up on coupler latch (6) to open pintle hook (26).

WARNING

Drawbar weighs 425 lbs (193 kg), (850 lbs (386 kg) with drawbar extension, if equipped). Drawbar may raise quickly or fall suddenly to the ground when released from coupler. Do not allow feet or body to get under or above drawbar. Failure to comply may result in injury or death to personnel.

NOTE

It may be necessary to move vehicle backwards slightly to relieve tension on drawbar.

13. Move air assist lever (3) on air assist valve (4) to UP position to apply air pressure to raise drawbar (2) up in coupler (1).
14. With drawbar (2) released from pintle hook (26), slowly drive vehicle away from trailer.

WARNING

Do not leave drawbar in elevated position after disconnecting from vehicle. Drawbar could fall. Failure to comply may result in injury or death to personnel.

NOTE

Move air assist valve lever up to raise drawbar or down to lower drawbar.

15. Use air assist valve (4) to lower drawbar (2) to ground.

END OF TASK

END OF WORK PACKAGE

OPERATOR MAINTENANCE
TRAILER BACKING WITH TURNTABLE LOCKED

INITIAL SETUP:

Not Applicable

TRAILER BACKING

CAUTION

Backing the trailer for minor repositioning is permitted without locking the turntable, provided caution is used when backing up. Failure to keep the trailer and vehicle aligned while backing up could result in the trailer jackknifing, possibly causing severe drawbar and vehicle damage.

1. Lift up on locking ring (1) and remove safety pin (2) from pin (3).

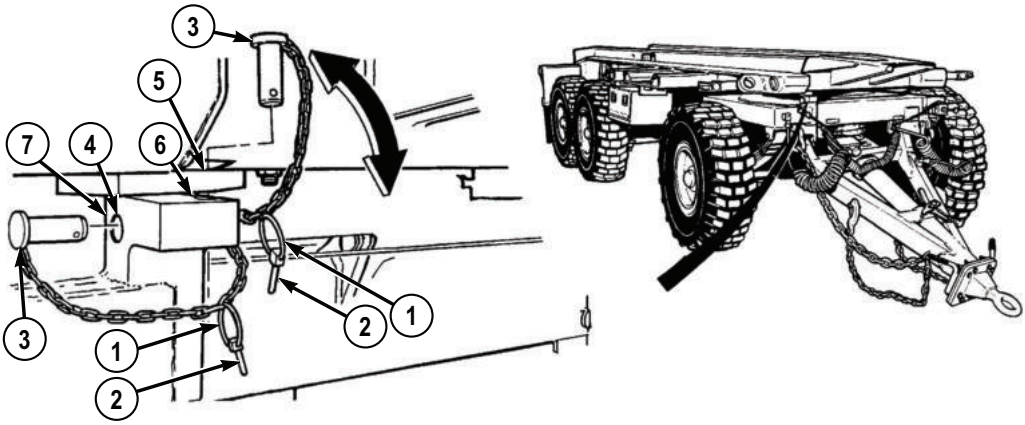

Figure 1.

2. Remove pin (3) from stowage hole (4).
3. Align turntable locking hole (5) and locking hole (6) in stowage bracket (7) and install pin (3).
4. Install safety pin (2) in pin (3) and engage locking ring (1).

TRAILER BACKING - Continued

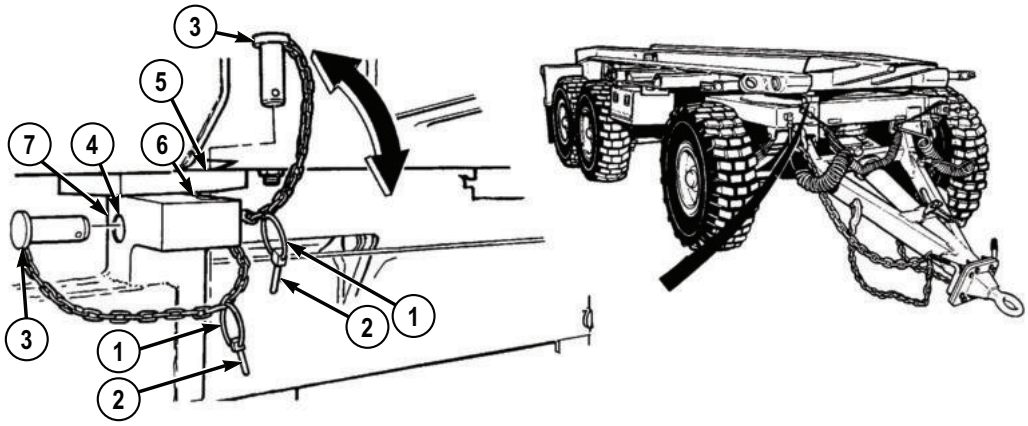

Figure 2.

CAUTION

Trailer turntable must be unlocked after completing backing operations. Failure to unlock turntable will result in a sheared pin or damaged trailer.

NOTE

When backing operations are completed perform Steps (5) through (8).

5. Lift up on locking ring (1) and remove safety pin (2) from pin (3).
6. Remove pin (3) from turntable locking hole (5) and locking hole (6).

CAUTION

Pin must be stowed in stowage hole with safety pin installed or pin can become damaged or lost.

7. Install pin (3) in stowage hole (4).
8. Install safety pin (2) in pin (3) and engage locking ring (1).

END OF TASK

END OF WORK PACKAGE

OPERATOR MAINTENANCE
RETRACTION/ENGAGEMENT OF FLATRACK LOCKS (NORMAL)

INITIAL SETUP:

Not Applicable

Retract Flatrack Locks

1. Ensure trailer is uncoupled and ready to be loaded/unloaded.

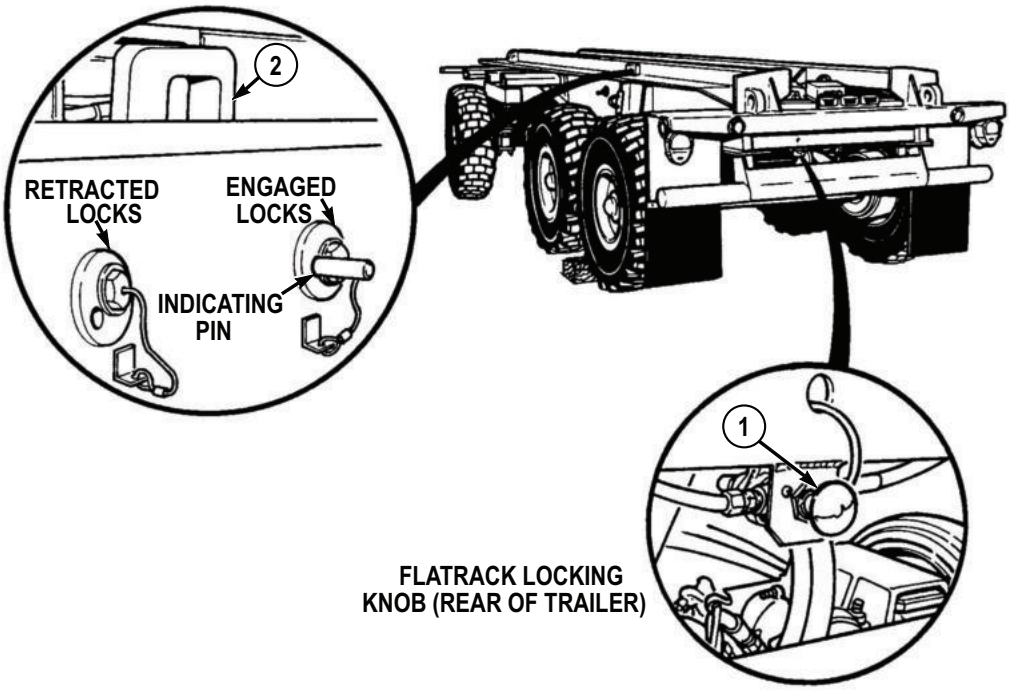

Figure 1.

NOTE

Flatrack locks should only be released prior to loading/unloading procedures.

Retract Flatrack Locks - Continued

2. Push in flatrack locking knob (1) to retract locks (2).

CAUTION

Ensure both flatrack locks are fully retracted or damage to equipment may result.

NOTE

The flatrack locks indicating pins should be retracted IN when the flatrack locks are released. There is one indicating pin on each side of the trailer.

3. Visually check both locks (2) to ensure locks are retracted.

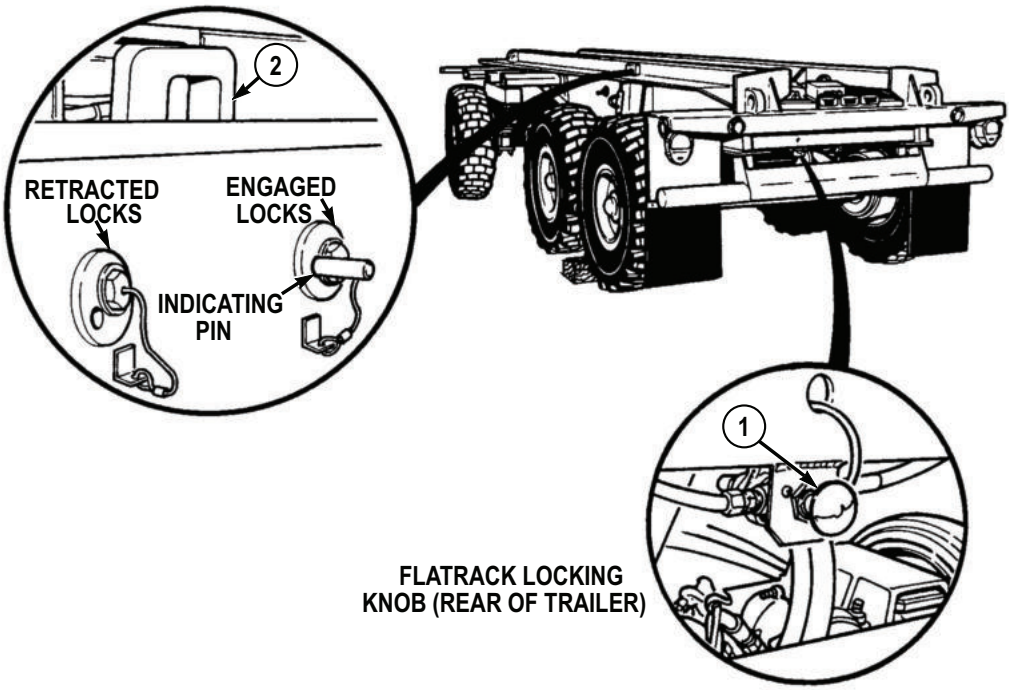

Figure 2.

4. The following procedure should be performed when the flatrack locks on the trailer will not release:

   a. Chock trailer tires at Axle No. 2 and No. 3 locations. Push flatrack locking knob (1) in on trailer. Verify that the locks (2) have not released (check indicating pins on the left and right side of the trailer).

Retract Flatrack Locks - Continued

WARNING

Driver has limited vision to rear. Ground guide is required when driving vehicle in reverse. Failure to comply may result in injury or death to personnel.

b. Back vehicle up to trailer with the LHS hook positioned to make load transfer from vehicle to trailer. Back the vehicle up until the trailer bumper stop is underneath the vehicle bumper stop, pull the vehicle forward approximately 1.0 to 2.0 in. (25.4 to 50.8 mm).

c. Connect the service gladhand from trailer to the vehicle and charge the trailer air system. Check the load lock indicating pins to see if locks have released and disconnect the service air line. Make sure that the flatrack release button is pushed in. If the load locks have released go to Step (g).

WARNING

Prior to and during any load or unload cycle, all personnel should stay clear of LHS, flatrack, front lift adapter, and container. Failure to comply may result in injury or death to personnel.

d. Using the Manual Hook Arm Mode, move the joystick to the load position until the weight of the flatrack is off of the front of the trailer and that there is approximately 2.0 to 4.0 in. (50.8 to 101.6 mm) of clearance between the front edge of the flatrack and the trailer deck.

e. While holding the vehicle brakes, switch the LHS mode switch to the Manual Main Frame Mode. Move the joystick to the unload position until the trailer can be seen pushing backwards.

f. Verify that the locks have released. If the flatrack locks have not released, use the manual tools to release the locks (WP 0015).

g. Switch LHS mode switch to the Automatic position and move the joystick to the load position. Offload flatrack from trailer to vehicle.

5. Chock trailer tires (WP 0021).

Retract Flatrack Locks - Continued

WARNING

Trailer wheels must be chocked or drawbar connected to vehicle before coupling trailer gladhands to vehicle. Failure to comply may result in injury or death to personnel.

NOTE

If locks do not retract, recharge the air system by performing Steps (5) through (11).

6. Couple service and gladhand (3) to vehicle.

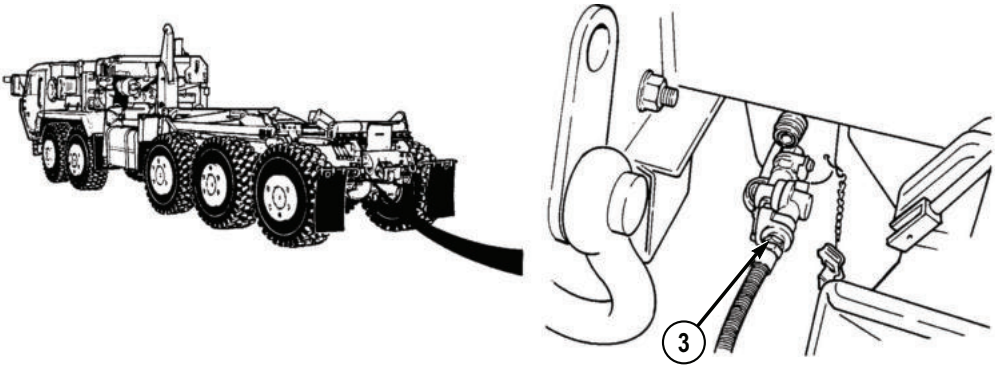

Figure 3.

7. Push in trailer air supply knob (4) in cab of vehicle.

Retract Flatrack Locks - Continued

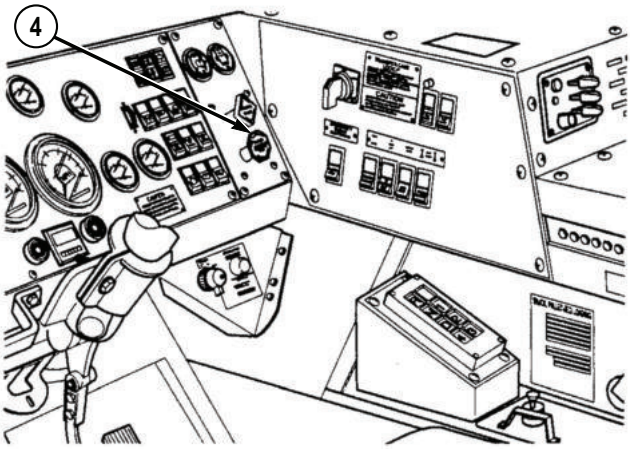

Figure 4.

8. With vehicle engine running, allow 3 to 5 minutes for air system to recharge.

NOTE

The flatrack locks indicating pins should be retracted IN when the flatrack locks are released. There is one indicating pin on each side of the trailer.

9. Push in flatrack locking knob (1) to retract locks (2).

Retract Flatrack Locks - Continued

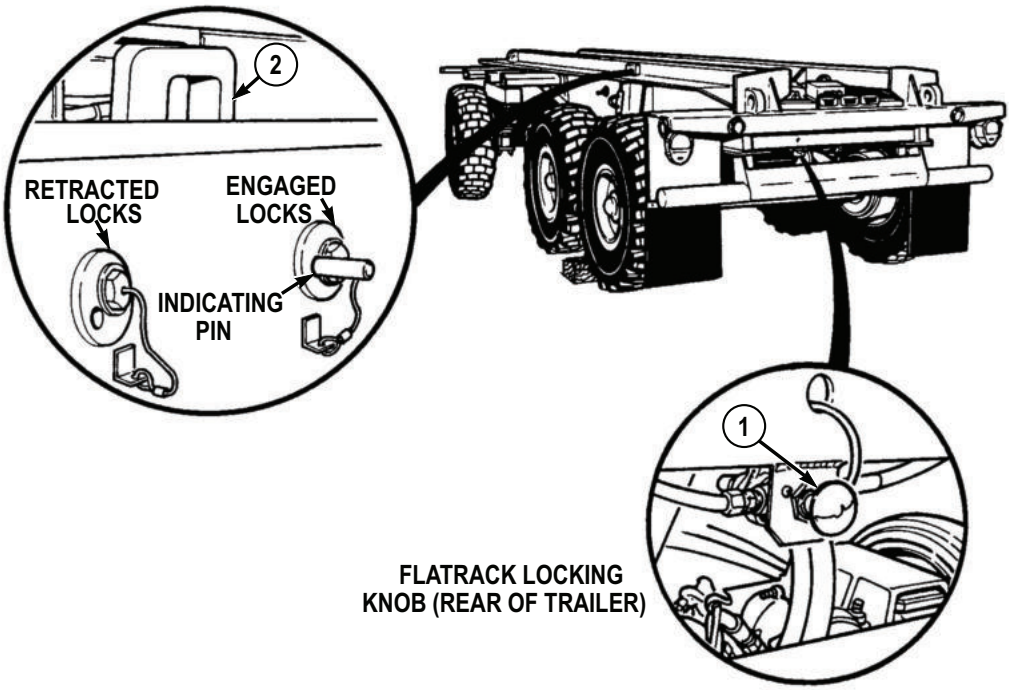

Figure 5.

10. Check locks (2) to ensure locks are retracted. If locks did not retract, manually retract locks (WP 0015).
11. Pull out trailer air supply knob (4) and uncouple trailer emergency brake line (3).

Retract Flatrack Locks - Continued

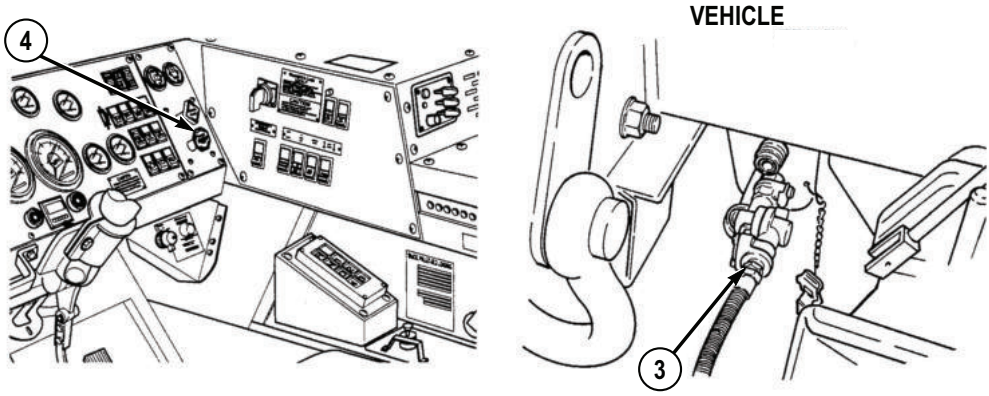

Figure 6.

END OF TASK

Engagement

Pull flatrack locking knob (1) to engage flatrack locks (2).

Engagement - Continued

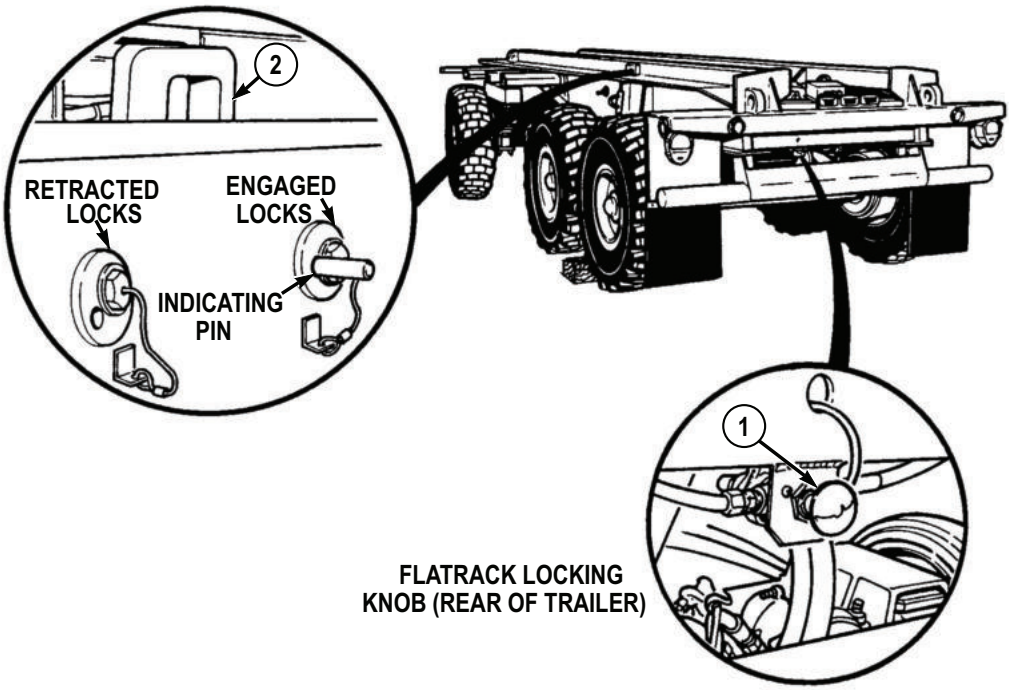

Figure 7.

END OF TASK

END OF WORK PACKAGE

OPERATOR MAINTENANCE
RETRACTION/ENGAGEMENT OF FLATRACK LOCKS (MANUAL)

INITIAL SETUP:

Not Applicable

Retract Flatrack Locks

NOTE

- Use manual procedure only if normal procedure will not work.
- Locks will automatically engage unless air pressure holds them retracted.
- The flatrack locks indicating pins should be extended OUT when the flatrack locks are locked. There is one indicating pin on each side of the trailer.

1. Ensure trailer is uncoupled and ready to be unloaded.
2. Chock trailer wheels (WP 0021).
3. Remove protective plugs (1) from threaded frame holes (2).
4. Remove unlocking rod from stowage box.

Retract Flatrack Locks - Continued

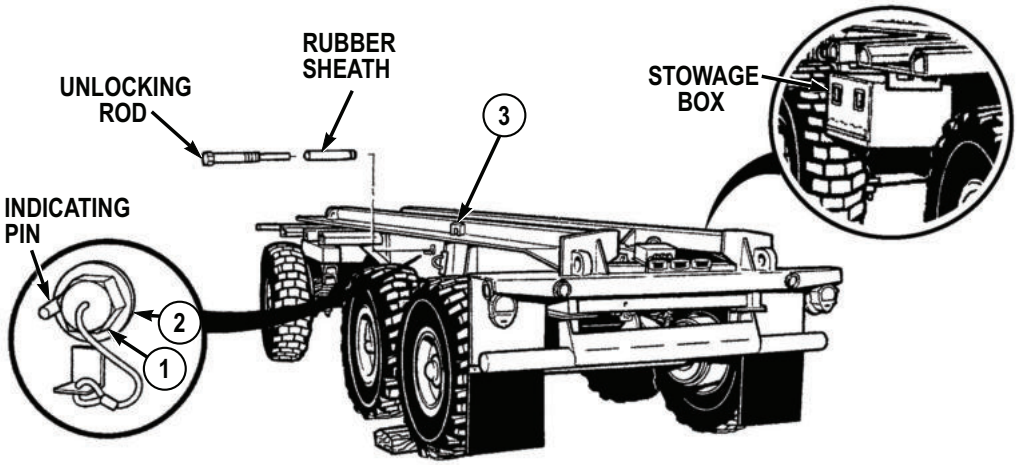

Figure 1.

5. Remove rubber sheath from unlocking rod.
6. Install unlocking rod in threaded frame holes (2) and turn clockwise using the adjustable wrench until flatrack locks (3) are retracted.

END OF TASK

ENGAGEMENT

1. Unscrew unlocking rod using the adjustable wrench and allow locks (3) to engage flatrack.
2. Install protection plugs (1) in threaded frame holes (2).

END OF TASK

END OF WORK PACKAGE

OPERATOR MAINTENANCE
RELEASE/APPLY PARKING BRAKES (NORMAL)

INITIAL SETUP:

Not Applicable

Release Parking Brakes

WARNING

Trailer wheels must be chocked or drawbar connected to vehicle before coupling trailer gladhands to vehicle. Failure to comply may result in injury or death to personnel.

NOTE

- The following procedure is used when the trailer is not hooked to the vehicle.
- Parking brakes are set automatically when gladhands are unhooked.
- Parking brakes are released when gladhands are connected and trailer air supply knob in cab is pushed in.
- If trailer parking brakes do not release, perform Steps (2) through (11) and pressurize air system.

1. Chock trailer wheels (WP 0021).
2. To release trailer parking brakes, push in trailer parking brake knob (1) (located on trailer).

Release Parking Brakes - Continued

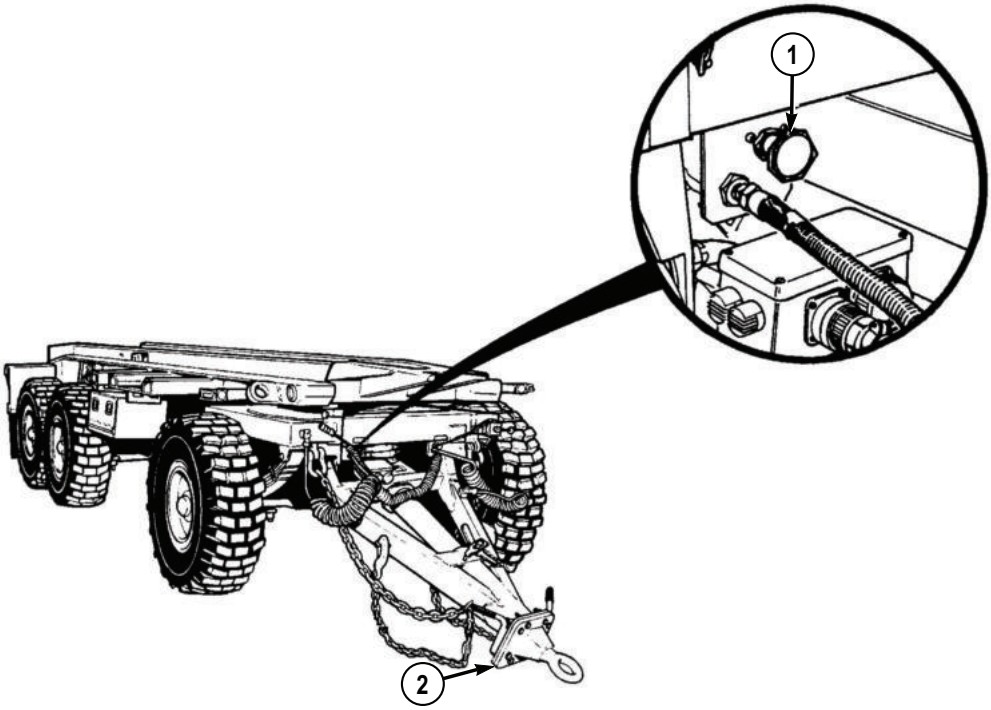

Figure 1.

WARNING

Driver has limited vision to rear. Ground guide is required when driving vehicle in reverse. Failure to comply may result in injury or death to personnel.

3. Back vehicle close to drawbar (2).

NOTE

When air pressure is supplied through emergency gladhand, trailer brakes will automatically release. When emergency gladhand is disconnected trailer brakes will automatically lock.

Release Parking Brakes - Continued

4. Connect emergency gladhand (3) and push in trailer air supply valve (4) located in vehicle cab.

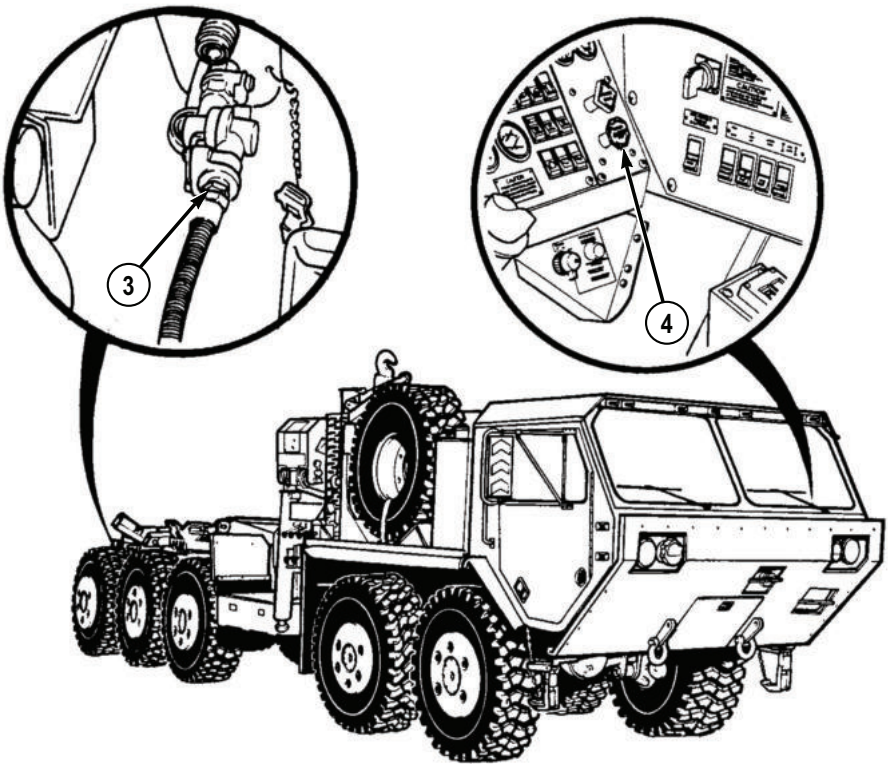

Figure 2.

5. Allow trailer air pressure to build up to operating pressure (3 to 5 minutes).
6. Pull trailer air supply valve (4) out of vehicle.
7. Unhook emergency gladhand (3) from vehicle.
8. Pull vehicle forward.
9. To release trailer parking brake, push in trailer parking brake knob (1) located on trailer.

Release Parking Brakes - Continued

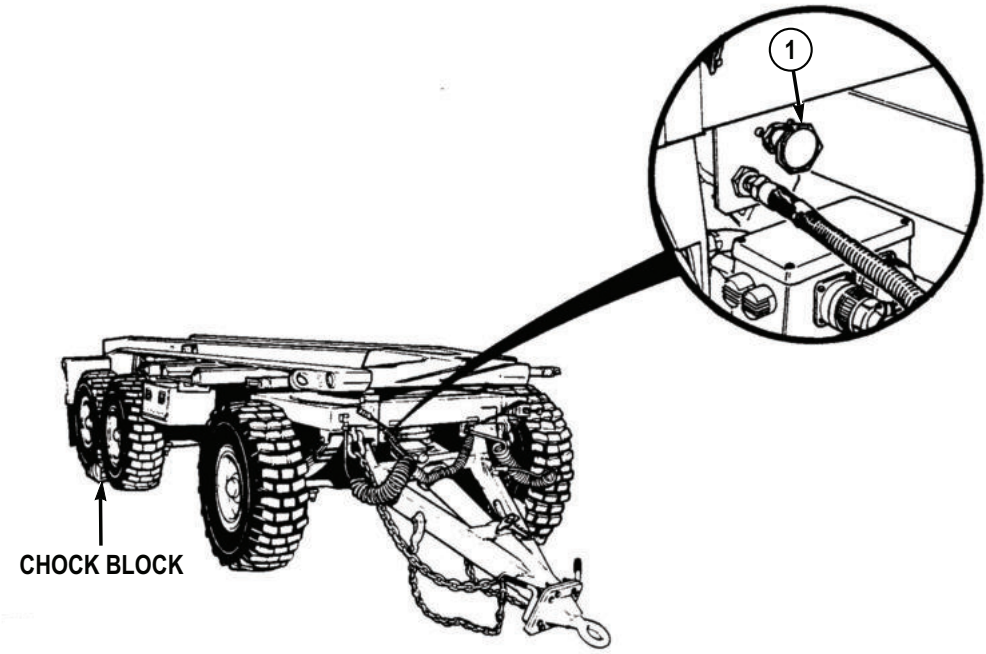

Figure 3.

NOTE

The trailer spring brakes automatically apply when trailer reservoir pressure is low (below 40 psi [276 kPa]). The parking brake button will not stay pushed in when the pressure is low unless the reservoir pressure is at zero pressure.

10. Remove chock blocks from trailer wheels (WP 0021).

END OF TASK

Apply Parking Brakes

Pull out parking brake knob (1) located on trailer.

Apply Parking Brakes - Continued

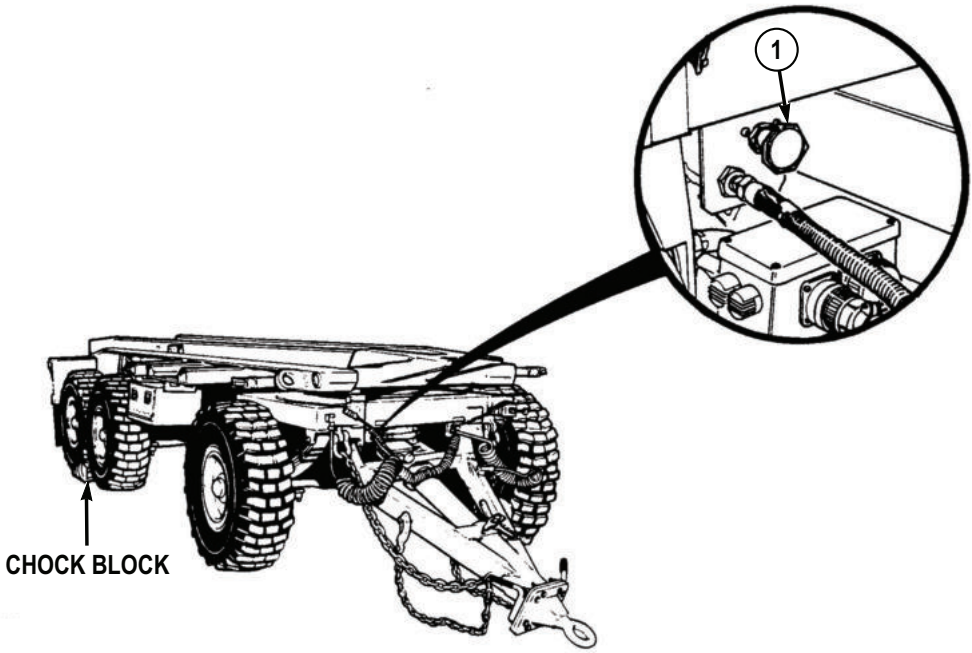

Figure 4.

END OF TASK

END OF WORK PACKAGE

OPERATOR MAINTENANCE
RELEASE/APPLY PARKING BRAKES (CAGING BRAKES)

INITIAL SETUP:

Not Applicable

Release Parking Brake

WARNING

Brake chamber contains a spring that is under great pressure. Never work directly behind brake chamber or attempt to disassemble brake chamber. Failure to comply may result in injury or death to personnel.

WARNING

If top of brake chamber is clogged with mud, sand, or dirt, do not proceed with caging operation unless brake chamber can be cleared. Failure to comply may result in injury or death to personnel.

WARNING

Trailer wheels must be chocked while caging brake chambers. Failure to comply may result in injury or death to personnel.

1. Chock wheels of trailer (WP 0021).

Release Parking Brake - Continued

2. Remove nut (1) and washer (2) from caging bolt (3) and remove caging bolt.

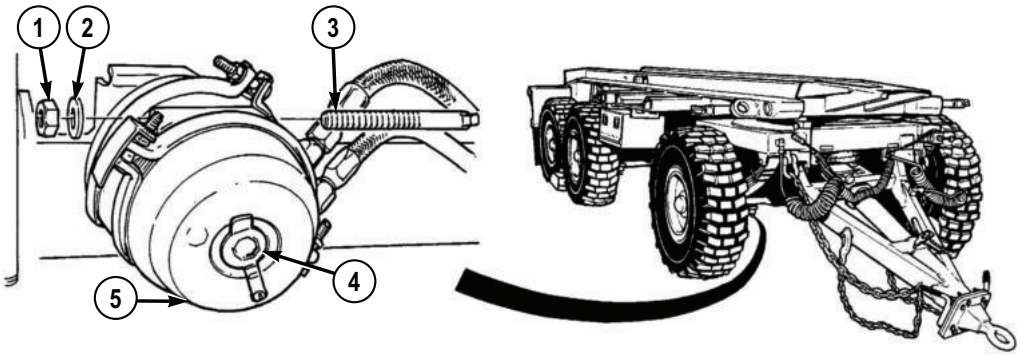

Figure 1.

3. Remove protective cap (4) on rear portion of brake chamber (5).

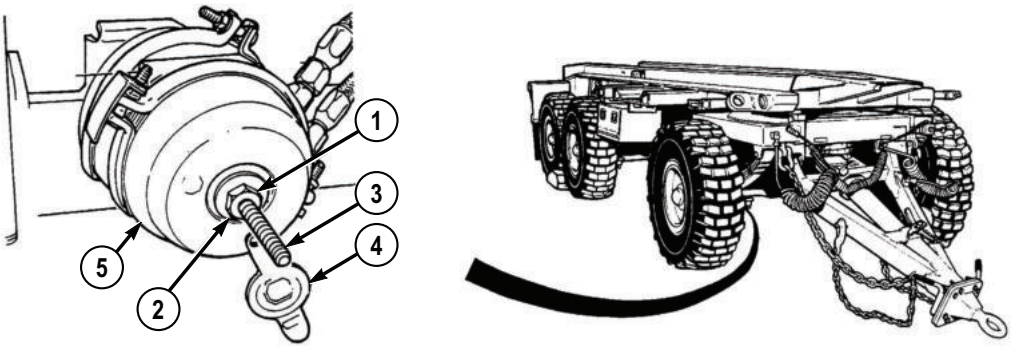

Figure 2.

4. Insert T-end of caging bolt (3) into hole on rear of brake chamber (5).
5. Rotate caging bolt (3) to the left 1/4 turn until it stops.

CAUTION

Tighten until spring is fully compressed. Do not overtighten spring or damage to equipment may result.

NOTE

- If caging bolt cannot be pulled directly out it is properly inserted.

Release Parking Brake - Continued

- Spring is fully compressed when caging bolt is sticking out approximately 3.0 in. (76.2 mm).

6. Install nut (1) and washer (2) on caging bolt (3). Tighten nut (1) until spring is fully compressed.
7. Repeat Steps (2) through (5) for the other brake chambers.

WARNING

Trailer must be connected to vehicle with parking brakes set before removing chock blocks or trailer may move uncontrolled. Failure to comply may result in injury or death to personnel.

8. Remove chock blocks from trailer wheels (WP 0021).

END OF TASK

Apply Parking Brakes

WARNING

Trailer wheels must be chocked while caging brake chambers. Failure to comply may result in injury or death to personnel.

1. Chock wheels of trailer (WP 0021).

Apply Parking Brakes - Continued

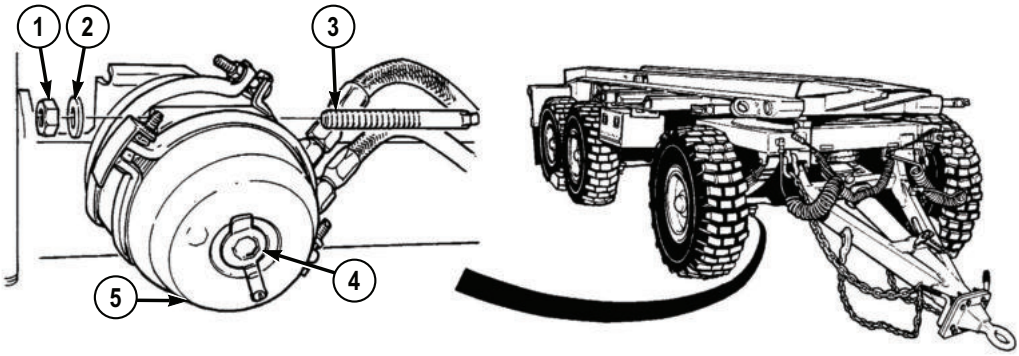

Figure 3.

2. Remove nuts (1) and washers (2) from caging bolts (3). from brake chambers (5).
3. Remove caging bolts (3) from brake chambers (5).
4. Install protective caps (4) on rear of brake chambers (5).
5. Install caging bolts (3) in storage position and secure with washers (2) and nuts (1).

END OF TASK

END OF WORK PACKAGE

OPERATOR MAINTENANCE
PREPARATION FOR LOADING FLATRACK

INITIAL SETUP:

Not Applicable

Preparation For Loading

WARNING

Trailer wheels must be chocked prior to loading the flatrack. Failure to comply may result in injury or death to personnel.

CAUTION

- Ensure trailer drawbar is down against the ground or damage to equipment may result.
- Ensure that air lines and cables are properly stowed or damage to equipment may result.
- Both trailer bumper points must be under the vehicle bumper stop flange and at least one of the bumper points must contact the bumper stop. The trailer bumper point not contacting the vehicle bumper stop cannot exceed 0.5 in. (12.7 mm) or flatrack will miss main rail guides and equipment damage may result.

1. Chock trailer wheels (WP 0021) and lower drawbar (1).

Preparation For Loading - Continued

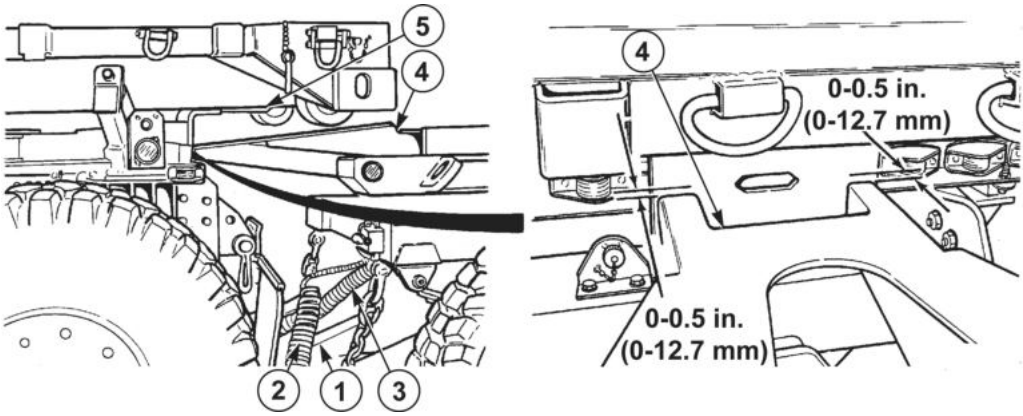

Figure 1.

2. Remove and stow air lines (2) and electrical cables (3) (WP 0010).
3. Back up vehicle so that trailer bumper (4) is under flange of bumper stop (5).
4. Push in on knob (6) and retract flatrack locks (7).

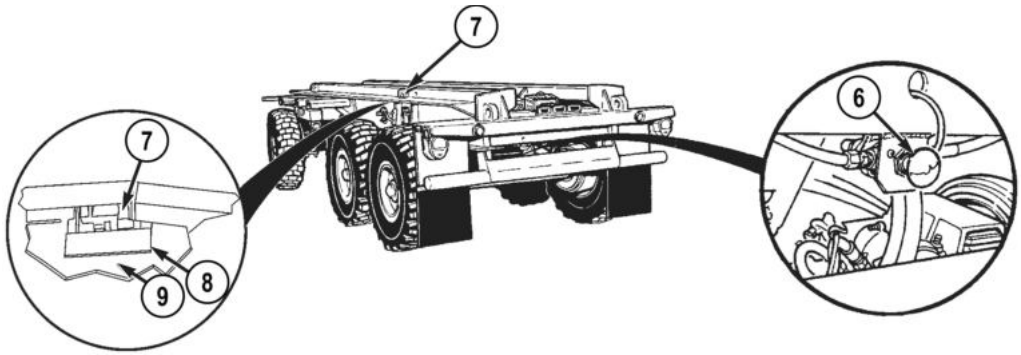

Figure 2.

CAUTION

Ensure surface plates are positioned towards outside edge of cut-outs or damage to equipment may result.

NOTE

- When loading flatrack without rollers, perform Steps (a) and (b).

Preparation For Loading - Continued

- Ensure surface plates are returned to stowage after flatrack has been unloaded from trailer.

a. Remove two surface plates (8) from stowage box.

b. Position two surface plates (8) on trailer (9) in flatrack locks (7) opening.

NOTE

There must be sufficient air pressure in trailer air system to retract flatrack locks. If not, charge the air system (WP 0023). If air system cannot retract flatrack locks, manually retract flatrack locks (WP 0015).

5. As flatrack is loaded, inspect and verify trailer guides (10) are lined up between flatrack main rails (11).

Preparation For Loading - Continued

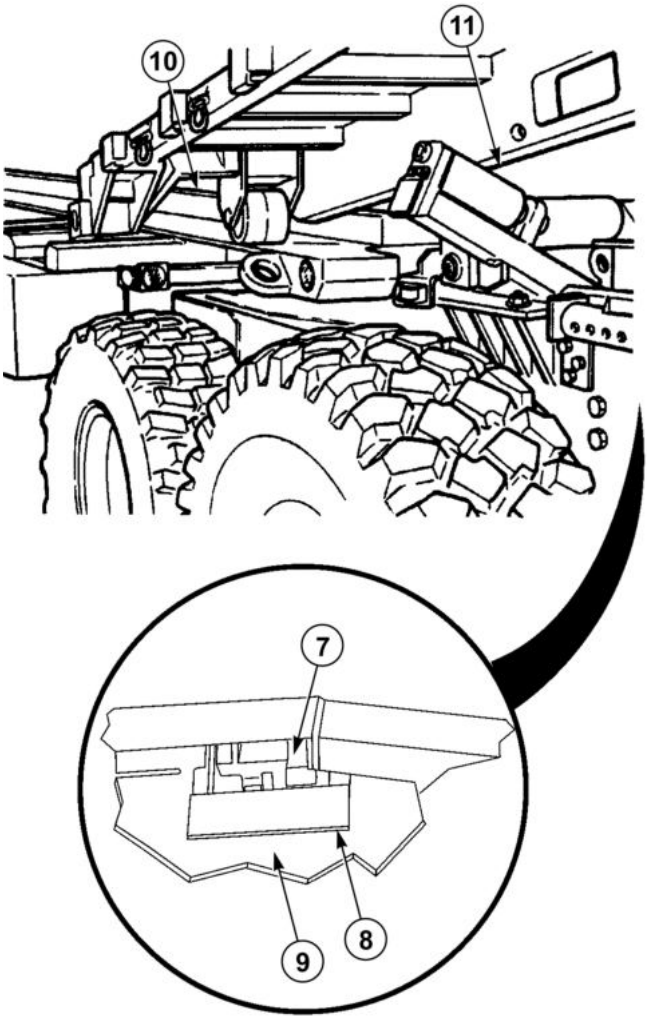

Figure 3.

6. Refer to TM 9-2320-364-10 (WP 0048) for flatrack loading procedures.
7. When flatrack is completely loaded, make certain that rear rollers (12) have contacted rear trailer stops (13).

Preparation For Loading - Continued

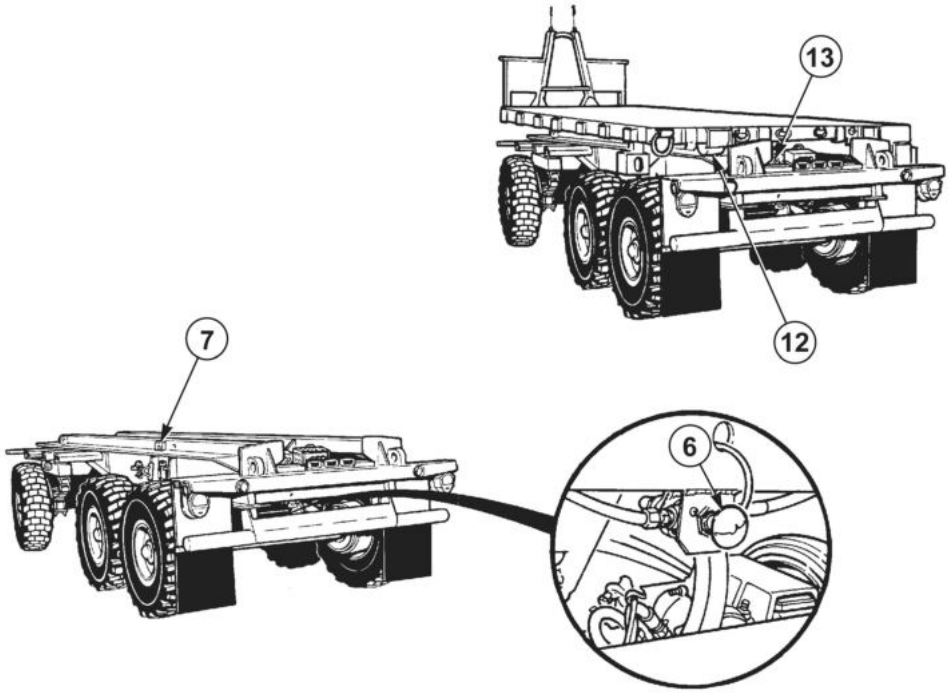

Figure 4.

8. Pull out knob (6) and lock load locks (7). Ensure load lock indicator pins are OUT.

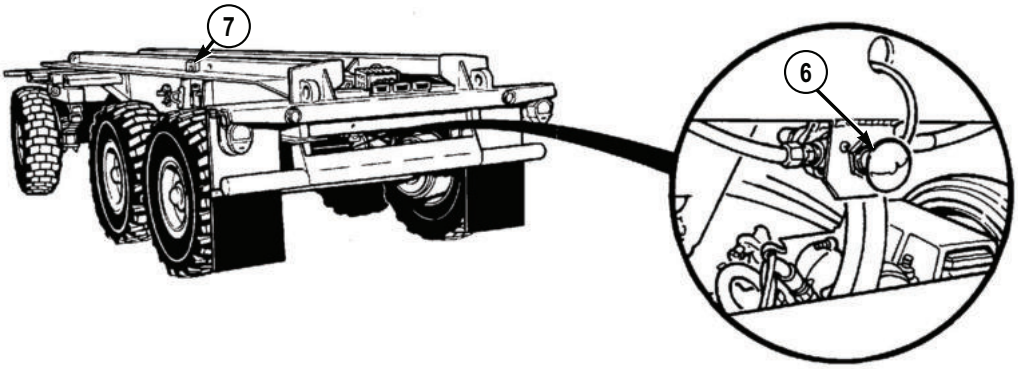

Figure 5.

Preparation For Loading - Continued

9. Refer to trailer hookup procedures (WP 0010).

END OF TASK

END OF WORK PACKAGE

OPERATOR MAINTENANCE
TIRE/SPARE TIRE REPLACEMENT

INITIAL SETUP:

Not Applicable

TIRE/SPARE TIRE REPLACEMENT

Refer to tire replacement (WP 0045) or spare tire replacement (WP 0046).

END OF TASK

END OF WORK PACKAGE

OPERATOR MAINTENANCE
FIRE EXTINGUISHER OPERATION

INITIAL SETUP:

Not Applicable

Operation

1. Pull up clamp (1) and open strap (2).

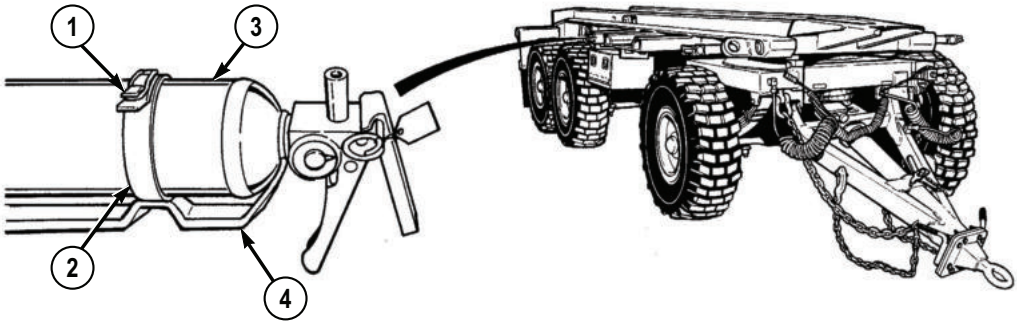

Figure 1.

2. Pull fire extinguisher (3) straight out and off bracket (4).

Operation - Continued

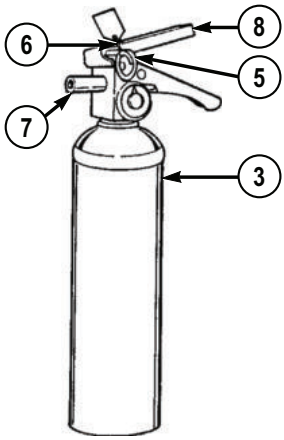

Figure 2.

3. Hold fire extinguisher (3) upright and pull safety pin (5) to break plastic tie (6).
4. Point nozzle (7) at base of fire.
5. Press down on stop lever (8) and spray discharge in a side-to-side motion at base of fire.
6. Replace fire extinguisher (3) after use.

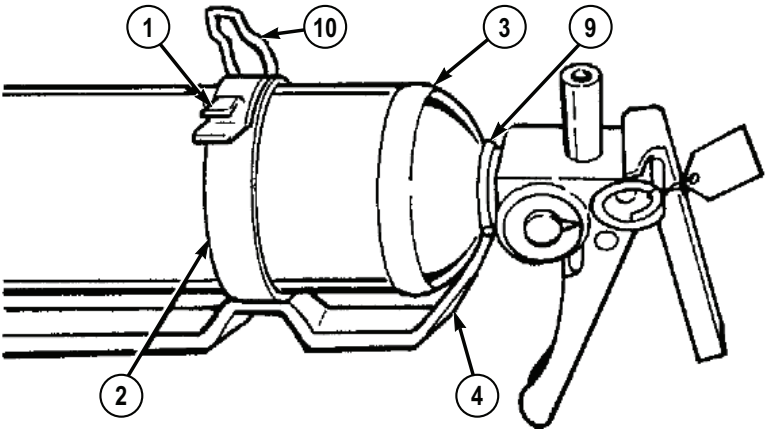

Figure 3.

7. Put neck (9) of fire extinguisher (3) on bracket (4).
8. Put clamp (1) on hook (10).

Operation - Continued

9. Push down on clamp (1) to secure strap (2).

END OF TASK

END OF WORK PACKAGE

OPERATOR MAINTENANCE
PLACE/REMOVE TIRE CHOCK BLOCKS

INITIAL SETUP:

Not Applicable

PLACE TIRE CHOCK BLOCKS

NOTE

Trailer should be parked on level ground.

1. Remove chock blocks (1) from stowage box (2).

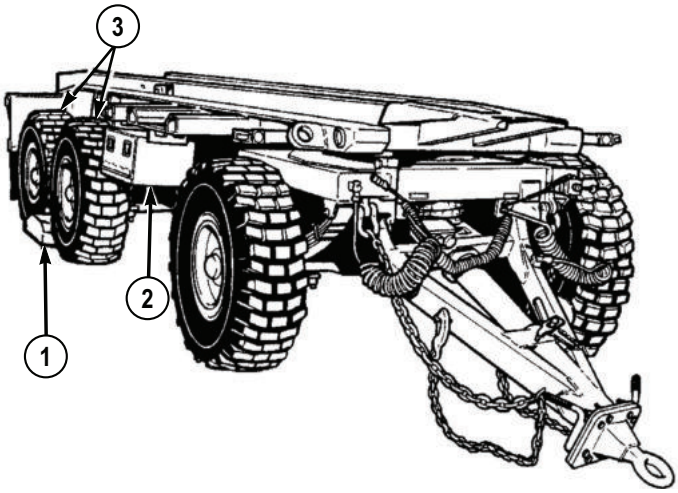

Figure 1.

2. Place chock blocks (1) on ground between wheels (3) of Axles No. 2 and No. 3.

END OF TASK

REMOVE TIRE CHOCK BLOCKS

1. Remove chock blocks from ground between wheels (3) of Axles No. 2 and No. 3.

REMOVE TIRE CHOCK BLOCKS - Continued

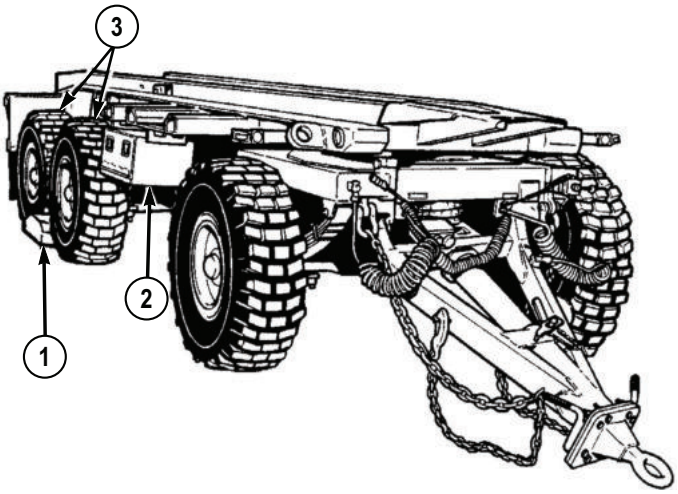

Figure 2.

2. Place chock blocks (1) in stowage box (2).

END OF TASK

END OF WORK PACKAGE

OPERATOR MAINTENANCE
DRAIN AIR RESERVOIRS

INITIAL SETUP:

Not Applicable

DRAIN

NOTE

When draining air system for maintenance or troubleshooting procedures, drain air from reservoirs until no air is heard exhausting from reservoirs.

1. Pull cable (1) on each reservoir (2) to release air. Observe airstream for evidence of moisture. If no moisture is present, release cable (1). If moisture is present in airstream, continue to release air until no moisture is evident.

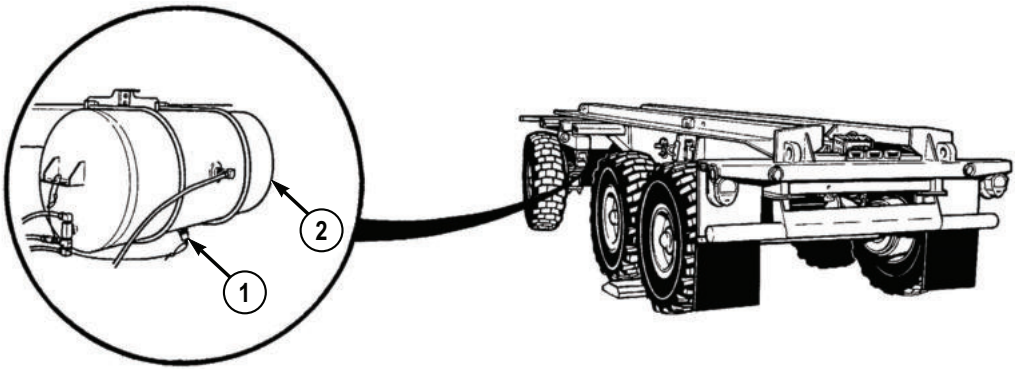

Figure 1.

2. Release cable (1).

END OF TASK

END OF WORK PACKAGE

OPERATOR MAINTENANCE
CHARGE AIR SYSTEM

INITIAL SETUP:

Not Applicable

Charge Air System

WARNING

Trailer wheels must be chocked or drawbar connected to vehicle before coupling trailer gladhands to vehicle. Failure to comply may result in injury or death to personnel.

NOTE

When air pressure is supplied through emergency line, trailer brakes will automatically release. When line is disconnected, trailer brakes will automatically lock.

1. Chock trailer wheels (WP 0021).

Charge Air System - Continued

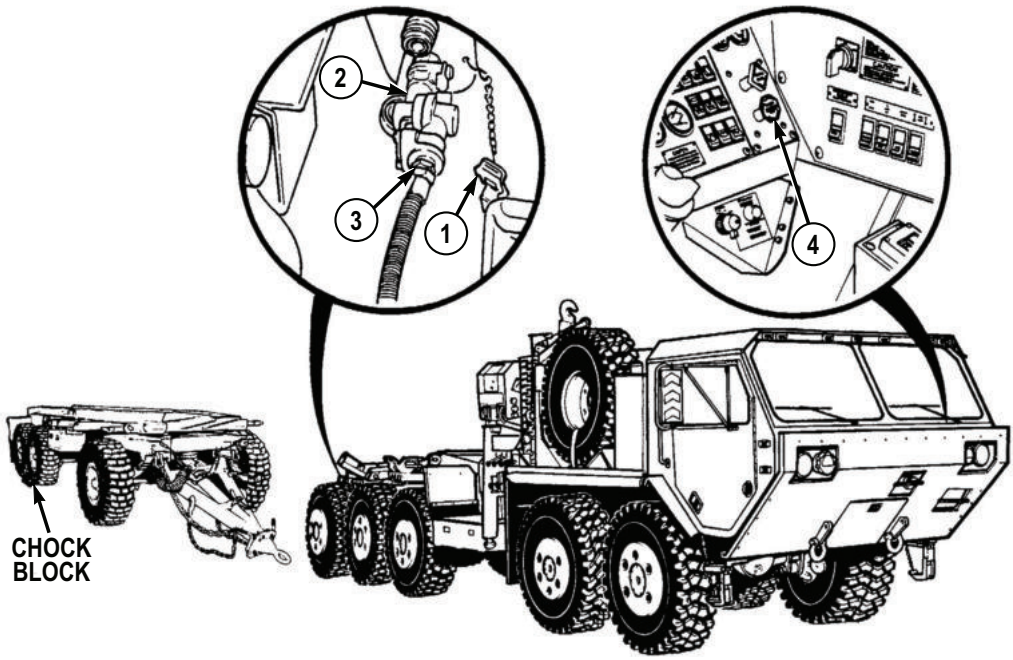

Figure 1.

2. Remove cover (1) from vehicle emergency gladhand (2).
3. Hook up emergency hose gladhand (3) to vehicle emergency gladhand (2).
4. Start vehicle. Refer to vehicle Operator's manual. (WP 0048)
5. Push in trailer air supply valve (4) located in vehicle cab.
6. Allow trailer air pressure to build to operating pressure 120 to 125 psi (827 to 861 kPa).
7. Pull out trailer air supply valve (4) located in vehicle cab.
8. Shut OFF engine. Refer to vehicle Operator's manual. (WP 0048)
9. Remove trailer emergency gladhand hose (3) from vehicle emergency gladhand (2).
10. Install cover (1) on vehicle emergency gladhand (2).

END OF TASK

END OF WORK PACKAGE

OPERATOR MAINTENANCE
LOWER DRAWBAR

INITIAL SETUP:

Not Applicable

Lower Drawbar

1. Retract drawbar (WP 0011).

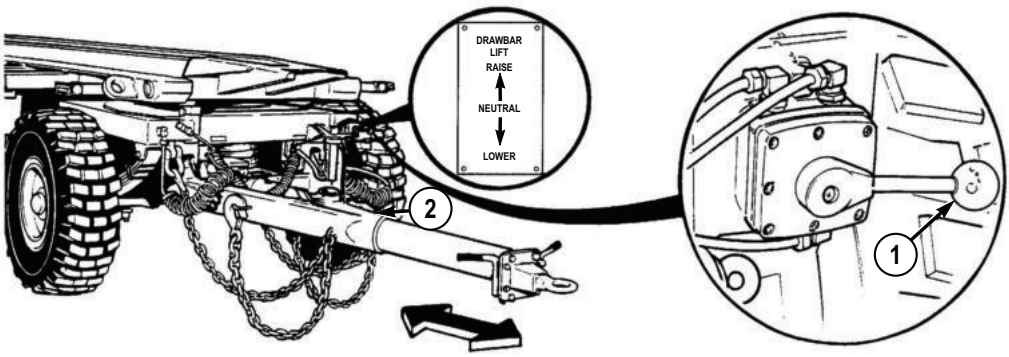

Figure 1.

2. Move air assist lever (1) to DOWN position to lower drawbar (2) to ground.

END OF TASK

END OF WORK PACKAGE

OPERATOR MAINTENANCE
DECALS AND INSTRUCTION PLATES

INITIAL SETUP:

Not Applicable

The locations of the decals and instruction plates on the trailer are shown below.

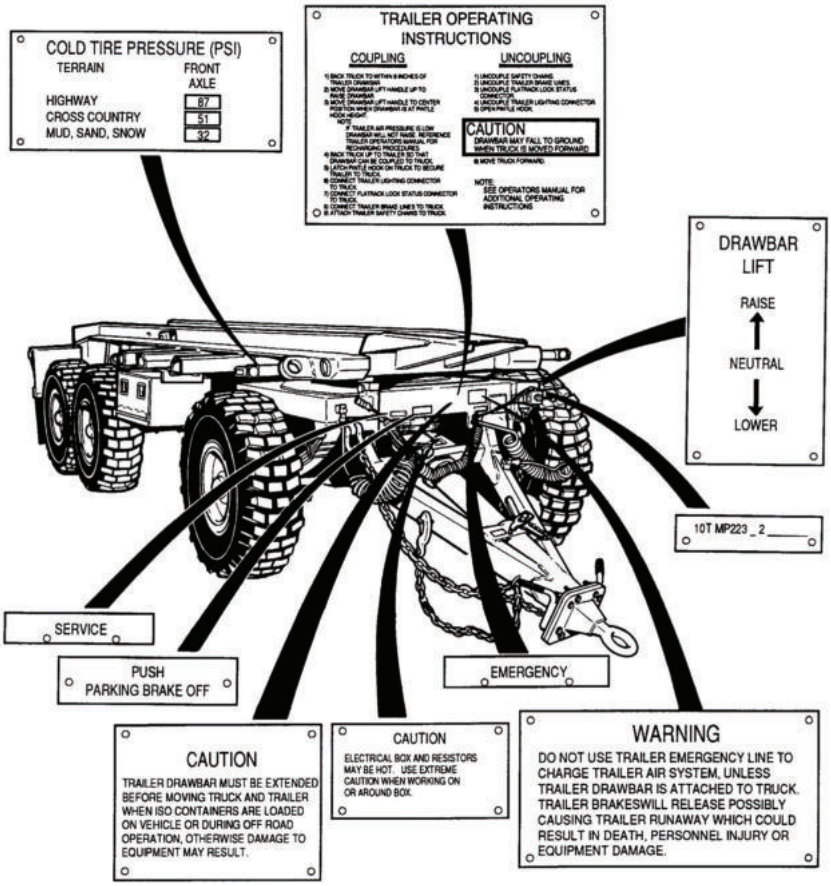

Figure 1.

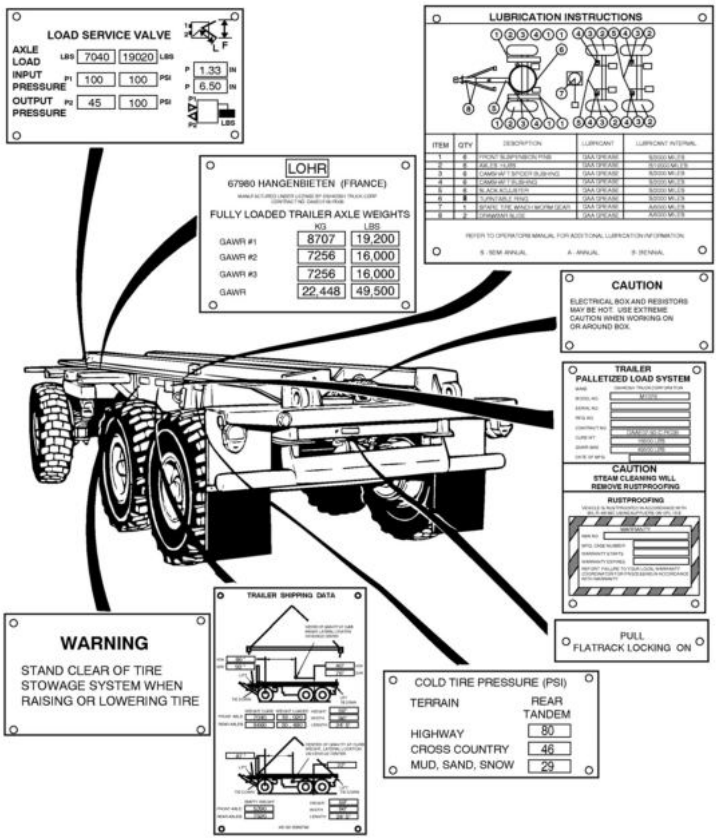

Figure 2.

END OF TASK

END OF WORK PACKAGE

OPERATOR MAINTENANCE
OPERATE IN EXTREME SAND OR MUD

INITIAL SETUP:

Not Applicable

Driving in mud can degrade braking and speed up brake shoe wear. If braking worsens while operating in mud, dry brakes by driving vehicle and trailer approximately 500 ft (153 m) with service brakes frequently applied. This must be done with brake drums totally out of mud so that drying action can take place. If adequate braking is not restored by drying brakes, notify Field Maintenance.

END OF TASK

END OF WORK PACKAGE

OPERATOR MAINTENANCE
OPERATE IN DESERT ENVIRONMENT

INITIAL SETUP:

Not Applicable

Refer to FM 90-3 (WP 0048) for detailed instructions for living and working in desert. Principles for operating in sand or mud (WP 0026) apply.

END OF TASK

END OF WORK PACKAGE

OPERATOR MAINTENANCE
OPERATE IN COLD WEATHER ENVIRONMENT

INITIAL SETUP:

Not Applicable

DRIVE ON MUD, SNOW, ICE, AND SLIPPERY SURFACES

CAUTION

- Before operating trailer in severe cold environment, make sure it has been prepared as described in FM 9-207 (WP 0048). Refer to FM 31-70 (WP 0048), FM 31-71 (WP 0048) and FM 21-305 (WP 0048) for additional information on operation in cold environment. Failure to prepare trailer properly could cause damage to equipment.
- Park in shelter when possible. If shelter is not available, park so trailer does not face wind. Place planks or brush under wheels so trailer will not freeze in place. Failure to park properly may cause damage to trailer.
- Drain air reservoirs after operation. Water in air system could freeze and block system causing damage to equipment.
- All snow and ice should be removed from trailer as soon as possible or damage to equipment could result.

NOTE

Refer to TM 9-2320-364-10 (WP 0048) for detailed operation procedures.

1. Accelerate and decelerate the towing vehicle gradually.
2. Keep towing vehicle speed as steady as possible after vehicle reaches desired speed.
3. Turn vehicle and trailer slowly when on slippery surfaces.
4. Steer vehicle and trailer away from ruts and large snow banks.
5. Steer vehicle and trailer straight up and down hills if possible.
6. Refer to TM 9-2320-364-10 (WP 0048) and select the appropriate transmission range to go down medium grades.
7. Drive at slower speeds and keep twice the normal distance from vehicle ahead.
8. Use turn signals sooner.

DRIVE ON MUD, SNOW, ICE, AND SLIPPERY SURFACES - Continued

WARNING

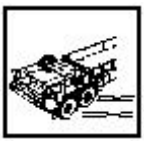

Apply engine brake only when vehicle and trailer tires have good traction. Use of engine brake on slick surfaces can cause vehicle and trailer to skid. Failure to comply may result in injury or death to personnel.

NOTE

Pressing brake lightly will help keep vehicle and trailer from skidding.

9. Apply brakes sooner and press brake pedal (1) lightly to give early warning that vehicle will slow or stop.

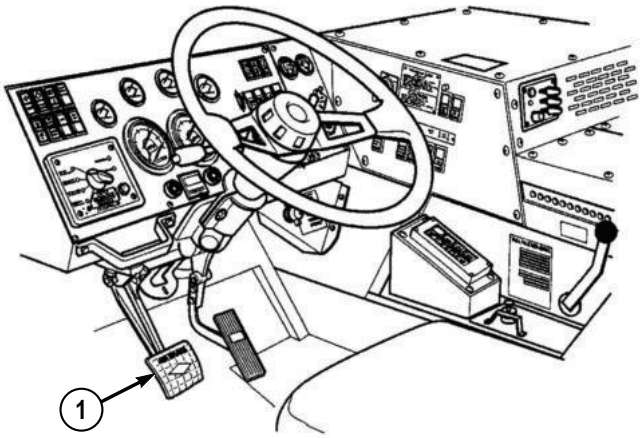

Figure 1.

10. Refer to operators manual and downshift, if necessary, when slowing or stopping vehicle and on slick surfaces.
11. Keep stoplights and clearance lights clean and free of snow and ice.

END OF TASK

BRAKES SLIPPING, SLIDING VEHICLE/TRAILER AND CENTRAL TIRE INFLATION SYSTEM \(CTIS\) USE

1. Drive slowly and test brakes after driving through slush or water. If brakes slip, perform the following:
   a. Continue to drive slowly.
   b. Apply moderate pressure on brake pedal (1) of towing vehicle to cause slight brake drag.
   c. When brakes are dry and no longer slip, let up on brake pedal (1).

NOTE

Refer to FM 21-305 (WP 0048) or applicable Operator's Manual for additional information on driving in dangerous conditions.

   d. Resume normal driving speed.
2. If rear of vehicle and trailer skids, do the following:
   a. Let up on throttle control (2).

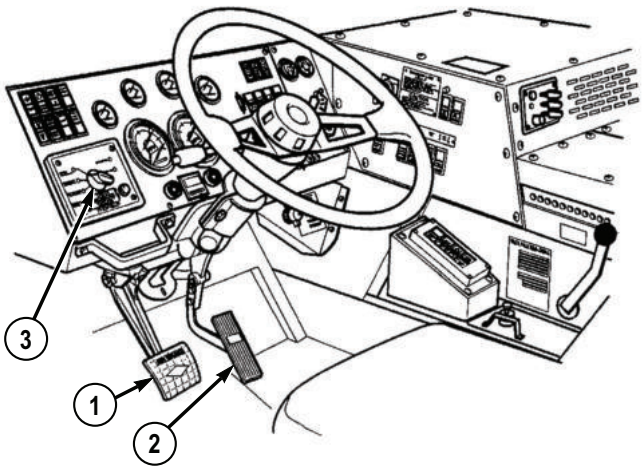

Figure 2.

   b. Steer in same direction in which vehicle is skidding.
   c. When vehicle and trailer is under control, press vehicle brake pedal (1) lightly.
   d. Steer vehicle and trailer on straight course and slowly press throttle control.
3. If towing vehicle and trailer starts to slide while climbing hill, do the following:
   a. Let up on throttle control (2) of towing vehicle.

BRAKES SLIPPING, SLIDING VEHICLE/TRAILER AND CENTRAL TIRE INFLATION SYSTEM \(CTIS\) USE - Continued

b. Steer vehicle and trailer in direction of slide until vehicle and trailer stops.

c. Slowly press throttle control (2) on towing vehicle and steer vehicle and trailer on straight course.

4. If towing vehicle is equipped with a CTIS and it is absolutely necessary for better traction, refer to applicable Operator's Manual and set CTIS switch (3) to position 4 (Emergency). Drive at low speed (5 mph [8 km/h]) when tire air pressures are reduced.

END OF TASK

END OF WORK PACKAGE

OPERATOR MAINTENANCE
DEEP WATER FORDING

INITIAL SETUP:

Not Applicable

DEEP WATER FORDING

WARNING

Do not ford water unless depth is known. Water deeper than 4 ft (1.2 m) may enter vehicle. Failure to comply may result in injury or death to personnel.

1. Ensure depth of fording site is not more than 4 ft (1.22 m).
2. Ensure bottom at fording site is firm enough that 4 ft (1.22 m) maximum fording depth will not be exceeded and trailer will not become mired.
3. Stop vehicle and trailer at edge of water.
4. If brakes have been used heavily and are hot, allow drums and shoes to cool before entering water if possible.
5. Drive vehicle and trailer slowly into water.
6. Drive at 3 to 4 mph (5 to 6 km/h), or less, through water.
7. Unless absolutely necessary, do not stop while in water.
8. If vehicle and trailer accidentally enters water deeper than 4 ft (1.22 m), slowly back vehicle and trailer out of deep water.
9. After leaving water, press brake pedal lightly and hold while driving slowly to dry out brake linings.
10. When clear of fording area, stop vehicle and trailer.
11. Apply and release parking brake several times to remove water from brake components.

DEEP WATER FORDING - Continued

12. Remove water and clean deposits from all trailer parts as soon as possible.
13. Lubricate and perform PMCS check as soon as possible.

END OF TASK

END OF WORK PACKAGE

OPERATOR MAINTENANCE
EMERGENCY PROCEDURES

INITIAL SETUP:

Not Applicable

LOSS OF AIR SUPPLY SYSTEM PRESSURE WHILE DRIVING

1. Refer to driving instructions in the event of air system failure .
2. Look for place to stop vehicle and trailer without blocking other traffic.
3. Downshift, as needed, to control vehicle speed until place is found to stop.
4. Refer to troubleshooting as soon as possible.

DRAWBAR OPERATIONS WITH AIR SYSTEM FAILURE

1. Raise drawbar:
   a. Remove a stowage strap (1) from stowage box.
   b. Install strap (1) through drawbar (2) and trailer bumper (3) and connect ends of strap together.

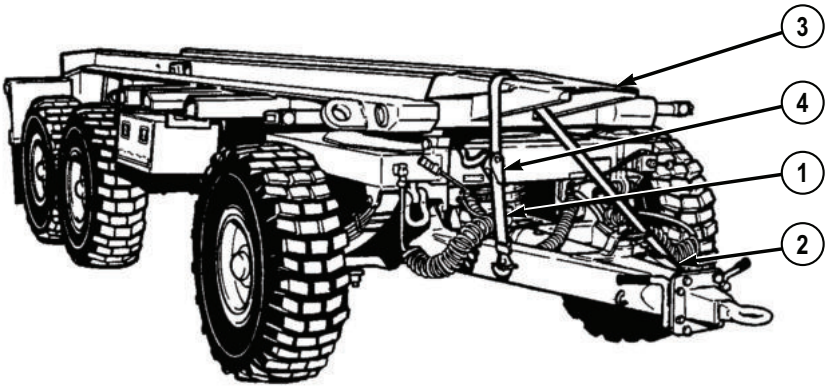

Figure 1.

   c. Use ratchet (4) on strap (1) to raise drawbar (2) to allow trailer hookup.

DRAWBAR OPERATIONS WITH AIR SYSTEM FAILURE - Continued

d. Connect trailer to vehicle (WP 0010).

e. Remove strap (1) from drawbar (2).

f. Place stowage strap (1) in stowage box.

2. Lower drawbar:

a. Remove a stowage strap (1) from stowage box.

b. Install strap (1) through drawbar (2) and trailer bumper (3) and connect ends of strap together.

c. Use ratchet (4) on strap (1) to raise drawbar (2).

d. Disconnect trailer from vehicle (WP 0010).

e. Use ratchet (4) on strap (1) to lower drawbar (2).

f. Remove strap (1) from drawbar (2).

g. Place stowage strap (1) in stowage box.

END OF TASK

END OF WORK PACKAGE

OPERATOR MAINTENANCE
STOWAGE AND SIGN GUIDE

SCOPE

This work package shows locations for data plates, decals, and stencils that are required to be in place on the PLS series vehicles, trailers, and flatracks.

GENERAL

The following figures show the location of metal signs, decals, and stencils used on the vehicle. Most of these and stencils contain cautions of information needed to operate the vehicle safely. For stowage locations of Components Of End Item (COEI) and Basic Issue Items (BII), refer to Components of End Item and Basic Issue Items lists. (WP 0049)

Table 1.

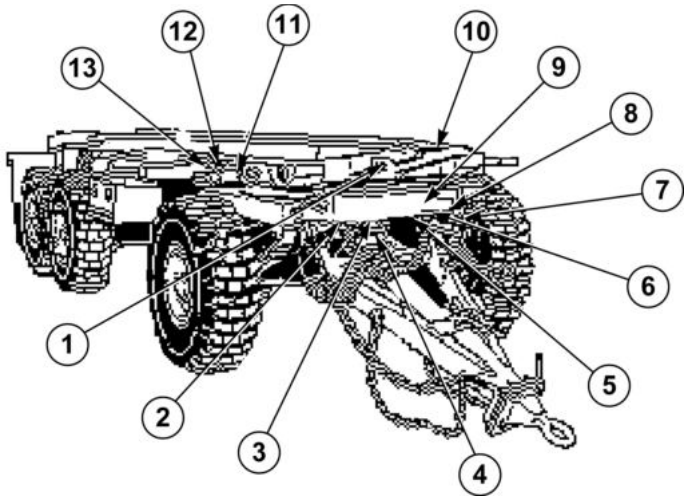

INDEX	PLACARD/DECAL
1	Five Pointed Star Stencil
2	Service Tag
3	Push Parking Brake Off

GENERAL - Continued

Table 1. - Continued

4	Caution Electrical Box and Resistors are Hot
5	Caution Drawbar Extension
6	Emergency Tag
7	V.I.N. Data (Side)
8	Drawbar Lift Data (Front)
9	Warning Emergency Line
10	Operator Instruction Plate
11	"TIE DOWN" Stencil (Left and Right Side)
12	"LEFT" Stencil (Left and Right Side)
13	Front Tire Inflation (Left and Right Side)

Table 2.

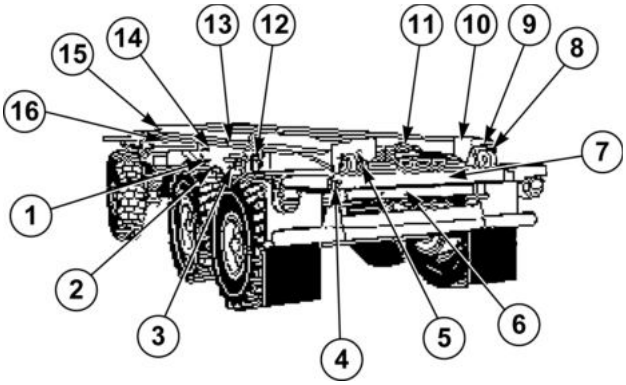

INDEX	PLACARD/DECAL
1	Shipping Data

GENERAL - Continued

Table 2. - Continued

2	"CARC" Stencil
3	Lubricating Data
4	"LEFT" Stencil
5	"TIE DOWN" Stencil
6	Flatrack Lock Plate Data
7	Five Pointed Star Stencil
8	"LEFT" Stencil
9	"TIE DOWN" Stencil
10	Metal Stamp V.I.N.
11	Caution Electrical Box and Resistors are Hot
12	Rear Tire Inflation (Left and Right Side)
13	Trailer Data
14	Warning Tire Stowage
15	Axle Weight Data
16	Load Sensing Data

END OF WORK PACKAGE

CHAPTER 3

TROUBLESHOOTING PROCEDURES

OPERATOR MAINTENANCE
ALL TRAILER LIGHTS FAIL

INITIAL SETUP:

Equipment Condition
Parking brake applied. (WP 0016)
Wheels chocked. (WP 0021)

TROUBLESHOOTING PROCEDURE
ALL TRAILER LIGHTS FAIL

TEST 1 - Is trailer electrical system connected to the vehicle electrical system?
Visually check if trailer electrical cable assembly is connected to the vehicle.

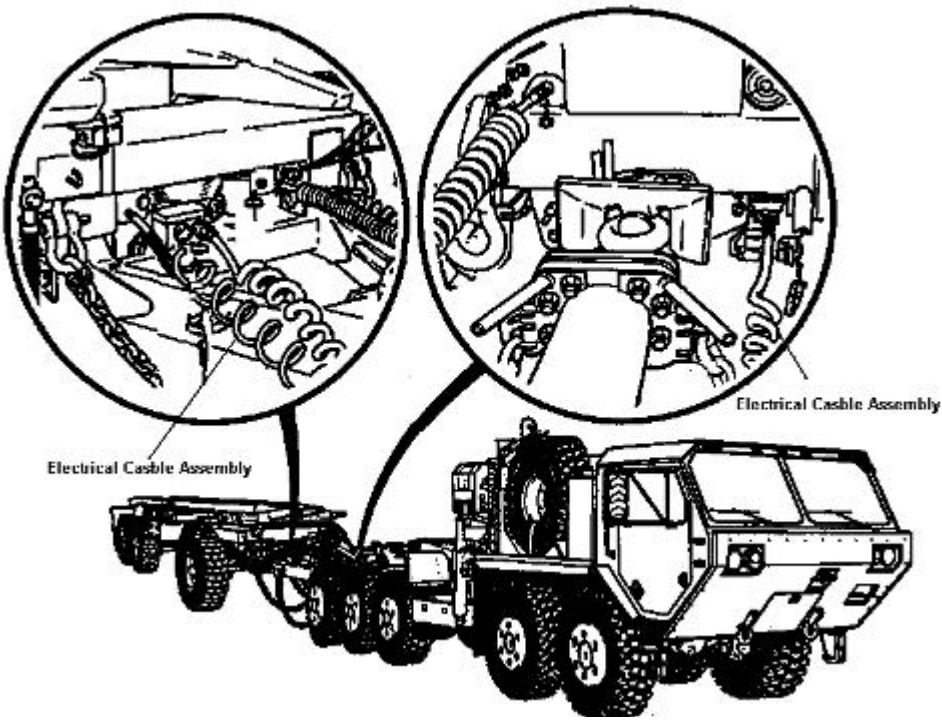

Figure 1.

CONDITION/INDICATION

Is trailer electrical system connected to the vehicle electrical system?

DECISION

No - Connect electrical cable assembly. (WP 0010)Test 2 - Do trailer lights operate properly?
Yes - Notify supervisor.

TEST 2 - Do trailer lights operate properly?

Operate trailer lights and check for proper operation. (WP 0010)

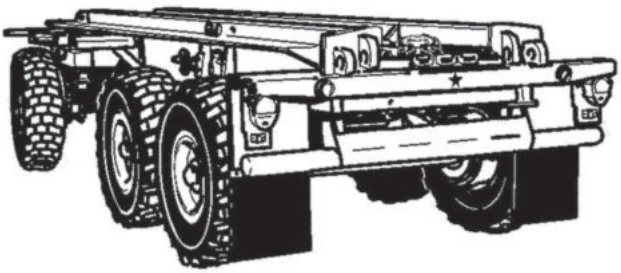

Figure 2.

CONDITION/INDICATION

Do trailer lights operate properly?

DECISION

No - Notify supervisor.
Yes - Problem fixed.

END OF WORK PACKAGE

OPERATOR MAINTENANCE
ALL TRAILER PARKING BRAKES DO NOT RELEASE

INITIAL SETUP:

Equipment Condition

Parking brake applied. (WP 0016)
Wheels chocked. (WP 0021)

TROUBLESHOOTING PROCEDURE
ALL TRAILER PARKING BRAKES DO NOT RELEASE

TEST 1 - Is the trailer emergency air gladhand connected to the vehicle air system?

WARNING

Trailer wheels must be chocked or drawbar connected to vehicle before coupling trailer gladhands to vehicle. Failure to comply may result in injury or death to personnel.

Visually inspect if trailer emergency air gladhand is connected to the vehicle.

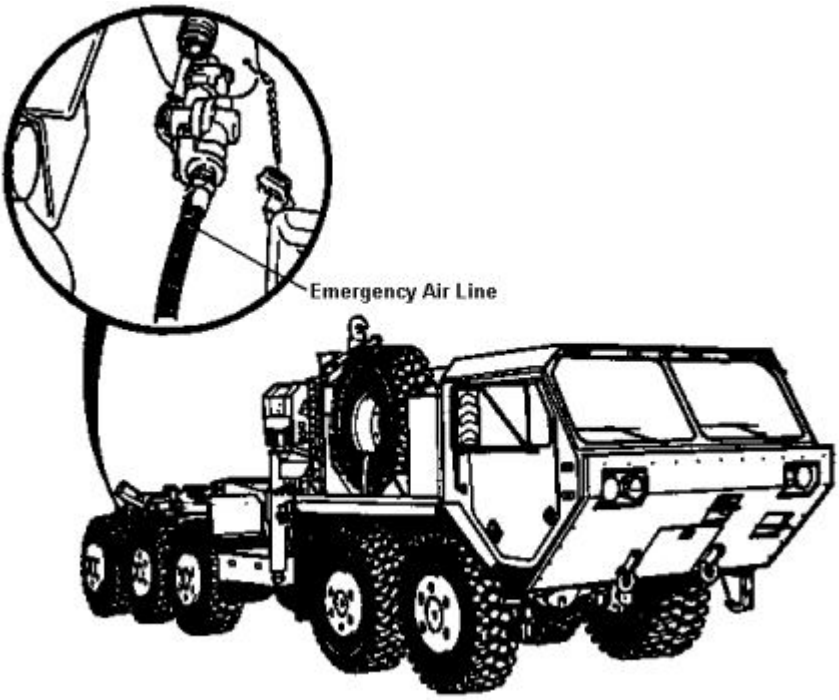

Figure 1.

CONDITION/INDICATION

Is the trailer emergency air gladhand connected to the vehicle air system?

DECISION

No - Connect the emergency air supply line. (WP 0010)Test 2 - Do all trailer parking brakes release?

Yes - Notify supervisor.

TEST 2 - Do all trailer parking brakes release?

1. Ensure vehicle is returned to normal operating condition.
2. Operate trailer parking brakes. (WP 0016)

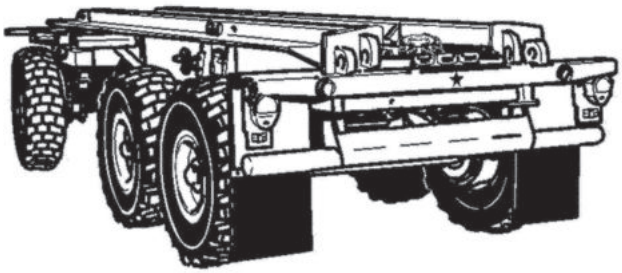

Figure 2.

CONDITION/INDICATION

Do all trailer parking brakes release?

DECISION

No - Notify supervisor.
Yes - Problem fixed.

END OF WORK PACKAGE

OPERATOR MAINTENANCE
TRAILER SERVICE BRAKES DO NOT APPLY

INITIAL SETUP:

Equipment Condition
Parking brake applied. (WP 0016)
Wheels chocked. (WP 0021)

TROUBLESHOOTING PROCEDURE
TRAILER SERVICE BRAKES DO NOT APPLY

TEST 1 - Is the trailer service air gladhand connected to the vehicle air system?

WARNING

Trailer wheels must be chocked or drawbar connected to vehicle before coupling trailer gladhands to vehicle. Failure to comply may result in injury or death to personnel.

Visually inspect the trailer service air gladhand.

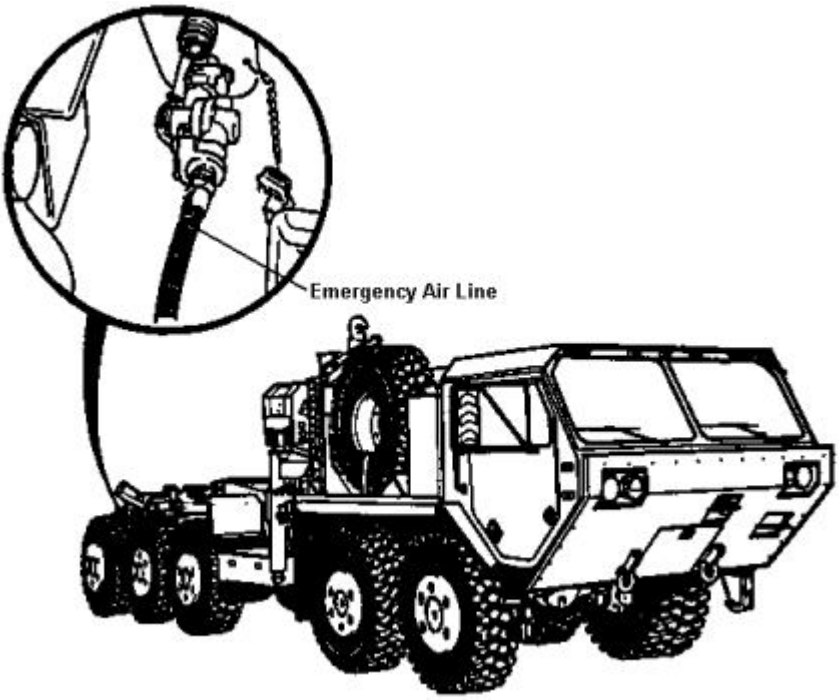

Figure 1.

CONDITION/INDICATION

Is the trailer service air gladhand connected to the vehicle air system?

DECISION

No - Connect the service air gladhand. (WP 0010)Test 2 - Do the trailer service brakes apply?

Yes - Notify supervisor.

TEST 2 - Do the trailer service brakes apply?

1. Ensure vehicle is returned to normal operating condition.
2. Operate trailer service brakes. (WP 0010)

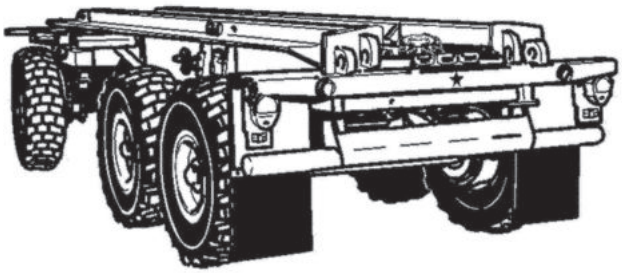

Figure 2.

CONDITION/INDICATION

Do the trailer service brakes apply?

DECISION

No - Notify supervisor.
Yes - Problem fixed.

END OF WORK PACKAGE

OPERATOR MAINTENANCE
TRAILER FAILS TO TURN AND FOLLOW THE VEHICLE

INITIAL SETUP:

Equipment Condition
Parking brake applied. (WP 0016)
Wheels chocked. (WP 0021)

TROUBLESHOOTING PROCEDURE
TRAILER FAILS TO TURN AND FOLLOW THE VEHICLE

TEST 1 - Is the drawbar locking pin removed?
Visually inspect the drawbar locking pin.

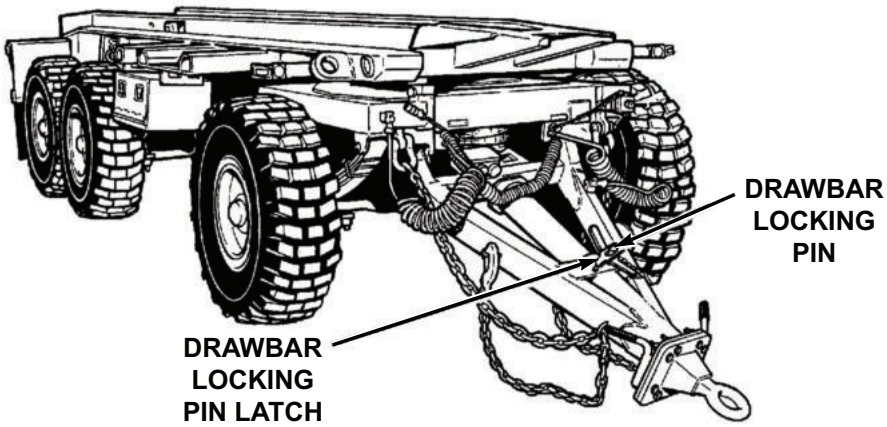

Figure 1.

CONDITION/INDICATION
Is the drawbar locking pin removed?

DECISION
No - Remove locking pin. (WP 0010)Test 2 - Does the trailer turn and follow the vehicle?
Yes - Notify supervisor.

TEST 2 - Does the trailer turn and follow the vehicle?

1. Ensure vehicle is returned to normal operating condition.
2. Operate vehicle and trailer. (WP 0010)

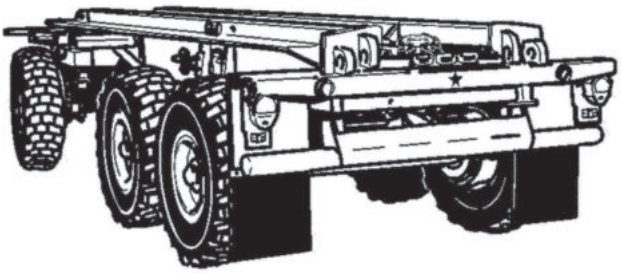

Figure 2.

CONDITION/INDICATION

Does the trailer turn and follow the vehicle?

DECISION

No - Notify supervisor.
Yes - Problem fixed.

END OF WORK PACKAGE

OPERATOR MAINTENANCE
FLATRACK LOCKING MECHANISM DOES NOT UNLOCK

INITIAL SETUP:

Equipment Condition

Parking brake applied. (WP 0016)
Wheels chocked. (WP 0021)

TROUBLESHOOTING PROCEDURE
FLATRACK LOCKING MECHANISM DOES NOT UNLOCK

TEST 1 - Is the emergency air gladhand connected to the vehicle?

WARNING

Trailer wheels must be chocked or drawbar connected to vehicle before coupling trailer gladhands to vehicle. Failure to comply may result in injury or death to personnel.

Visually check if emergency air gladhand is connected to the vehicle.

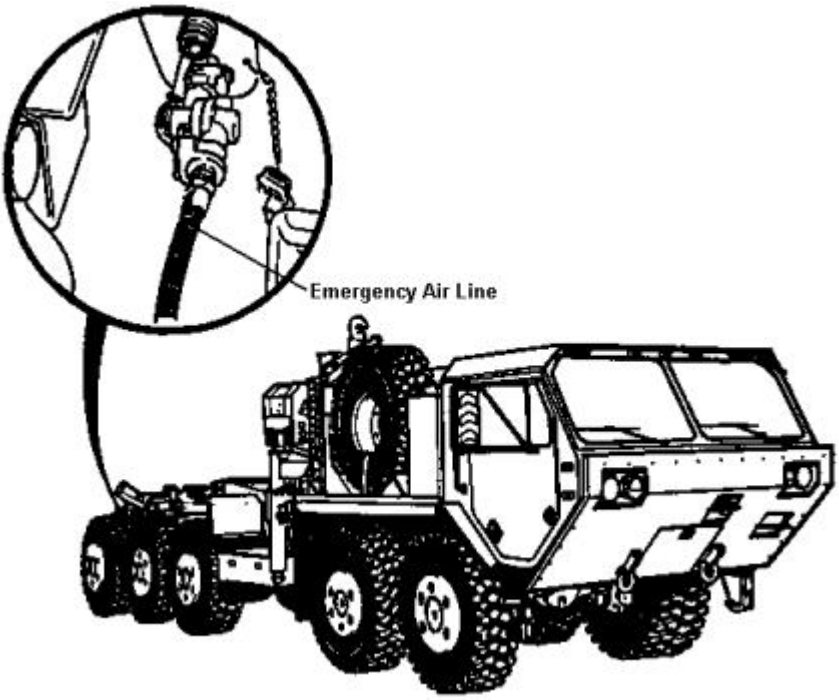

Figure 1.

CONDITION/INDICATION

Is the emergency air gladhand connected to the vehicle?

DECISION

No - Connect emergency air gladhand. (WP 0010)Test 2 - Does the flatrack locking mechanism unlock?

Yes - Notify supervisor.

TEST 2 - Does the flatrack locking mechanism unlock?

1. Ensure vehicle is returned to normal operating condition.
2. Operate flatrack locking mechanism. (WP 0014)

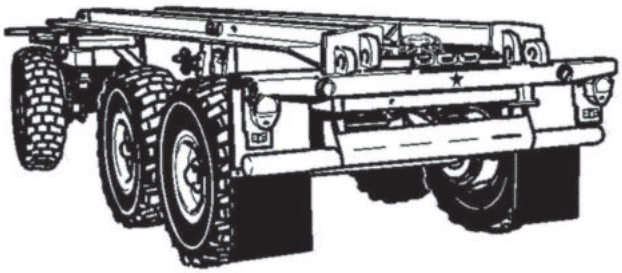

Figure 2.

CONDITION/INDICATION

Does the flatrack locking mechanism unlock?

DECISION

No - Notify supervisor.
Yes - Problem Fixed.

END OF WORK PACKAGE

OPERATOR MAINTENANCE
FLATRACK LOCKING MECHANISM DOES NOT LOCK

INITIAL SETUP:

Equipment Condition
Parking brake applied. (WP 0016)
Wheels chocked. (WP 0021)

TROUBLESHOOTING PROCEDURE
FLATRACK LOCKING MECHANISM DOES NOT LOCK

TEST 1 - Is the flatrack positioned on the trailer correctly?
Visually check the position of the flatrack on the trailer.

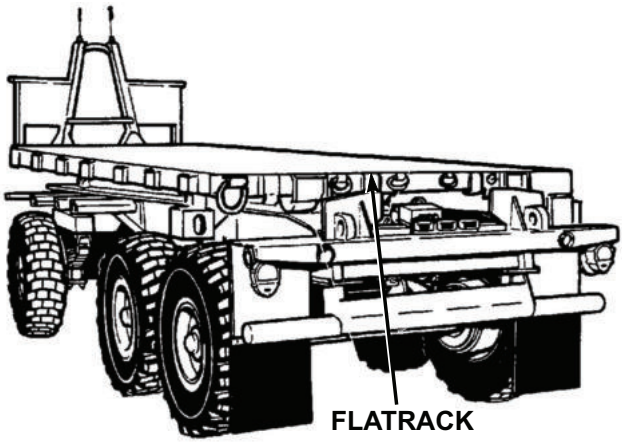

Figure 1.

CONDITION/INDICATION
Is the flatrack positioned on the trailer correctly?

DECISION
No - Reposition Flatrack. (WP 0018)Test 2 - Does the flatrack locking mechanism lock?
Yes - Notify supervisor.

TEST 2 - Does the flatrack locking mechanism lock?

1. Ensure the vehicle is returned to normal operating condition.
2. Operate the flatrack locking mechanism. (WP 0014)

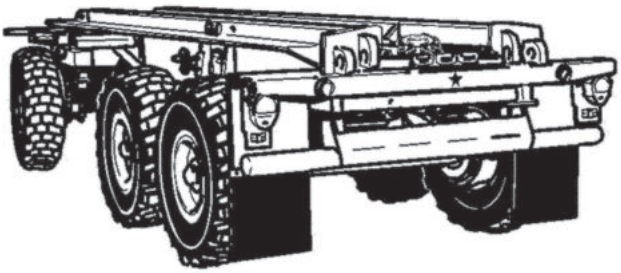

Figure 2.

CONDITION/INDICATION

Does the flatrack locking mechanism lock?

DECISION

No - Notify supervisor.
Yes - Problem fixed.

END OF WORK PACKAGE

OPERATOR MAINTENANCE
DRAWBAR WILL NOT RAISE OR LOWER

INITIAL SETUP:

Equipment Condition
Parking brake applied. (WP 0016)
Wheels chocked. (WP 0021)

TROUBLESHOOTING PROCEDURE
DRAWBAR WILL NOT RAISE OR LOWER

TEST 1 - Is air tank No. 1 pressurized?
Pull air drain cable and listen for air release.

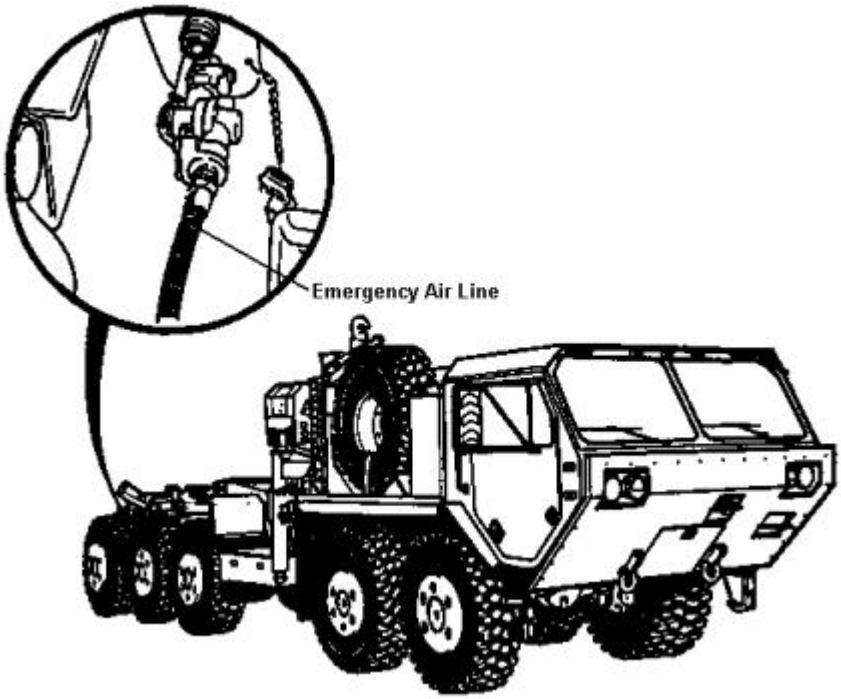

Figure 1.

CONDITION/INDICATION

Is air tank No. 1 pressurized?

DECISION

No - Charge air tank No. 1. (WP 0023)Test 2 - Does drawbar raise and lower?
Yes - Notify supervisor.

TEST 2 - Does drawbar raise and lower?

1. Ensure vehicle is returned to normal operating condition.
2. Raise and lower drawbar. (WP 0011)

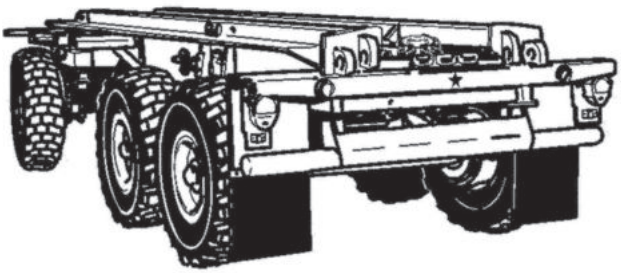

Figure 2.

CONDITION/INDICATION

Does drawbar raise and lower?

DECISION

No - Notify supervisor.
Yes - Problem fixed.

END OF WORK PACKAGE

CHAPTER 4

PREVENTIVE MAINTENANCE CHECKS AND SERVICES (PMCS)

OPERATOR MAINTENANCE
INTRODUCTION - OPERATOR'S PREVENTIVE MAINTENANCE

PMCS INTRODUCTION

This section contains Preventive Maintenance Checks and Services (PMCS) requirements for PLS series vehicles, trailers, and flatracks. The PMCS tables contain checks and services necessary to ensure that the vehicle is ready for operation. Using PMCS tables, perform maintenance at specified intervals.

MAINTENANCE FORMS AND RECORDS

Every mission begins and ends with paperwork. There is not much of it, but it must be kept up. The filled-out forms and records have several uses. They are a permanent record of services, repairs, and modifications made on the vehicle; they are reports to field level maintenance and to your Commander; and they serve as a checklist to find out what is wrong with the vehicle after its last use and whether those faults have been fixed. For the information needed on forms and records, refer to DA PAM 750-8 .

PREVENTIVE MAINTENANCE CHECKS AND SERVICES

- Do the before (B) PREVENTIVE MAINTENANCE just before operating vehicle. Pay attention to the CAUTIONS and WARNINGS.
- Do the during (D) PREVENTIVE MAINTENANCE while vehicle and/or its component systems are in operation. Pay attention to the CAUTIONS and WARNINGS.
- Do the after (A) PREVENTIVE MAINTENANCE right after operating vehicle. Pay attention to the CAUTIONS and WARNINGS.
- Do the (W) PREVENTIVE MAINTENANCE weekly. Pay attention to the CAUTIONS and WARNINGS.
- Do the (M) PREVENTIVE MAINTENANCE once a month. Pay attention to the CAUTIONS and WARNINGS.
- If something does not work, troubleshoot and notify the supervisor.
- Always do PREVENTIVE MAINTENANCE in the same order until it gets to be a habit. Once practiced, problems can be spotted in a hurry.
- If something looks wrong and cannot be fixed right then, write it on DA Form 2404 or DA Form 5988E . If something seems seriously wrong, report it to field maintenance RIGHT AWAY.
- When doing PREVENTIVE MAINTENANCE, take along the tools needed and a rag or two to make all the checks.

GENERAL MAINTENANCE PROCEDURE

- **Cleanliness:** Dirt, grease, oil, and debris only get in the way and may cover up a serious problem. Use solvent cleaning compound (WP 0050, Table 1, Item 44, 45, 46) on all metal surfaces and soapy water on rubber.
- **Bolts, Nuts, and Screws:** Check bolts, nuts, and screws for obvious looseness, missing, bent, or broken condition and tighten or replace as necessary. They cannot all be checked with a tool, of course, but look for chipped paint, bare metal, or rust around bolt heads.
- **Welds:** Look for loose or chipped paint, rust, or gaps where parts are welded together. If a bad weld is found, have it repaired.
- **Electric Wires and Connectors:** Look for cracked or broken insulation, bare wires, and loose or broken connectors. Tighten loose connectors and make sure wires are in good shape.
- **Hydraulic Lines and Fittings:** Look for wear, damage, and leaks and make sure clamps and fittings are tight. Wet spots show leaks, of course, but a stain around a fitting or connector can indicate a leak. If a connector or fitting is loose, tighten it. If something is broken or worn out, repair or replace it per the applicable procedure.
- **Damage is defined as:** Any condition that affects safety or would render the vehicle unserviceable for mission requirements.

FLUID LEAKAGE

It is necessary to know how fluid leakage affects the status of fuel, oil, coolant, and the hydraulic systems. The following are definitions of types/classes of leakage necessary to know in order to determine the status of the vehicle.

NOTE

Equipment operation is allowable with minor leakage (Class I or II). Consideration must be given to the fluid capacity in the item/system being checked/inspected. When in doubt, notify the supervisor. When operating with Class I or II leaks, continue to check fluid levels as required in the PMCS. Class III leaks should be repaired per applicable procedure.

Class I : Seepage of fluid (as indicated by wetness or discoloration) not great enough to form drops.

Class II: Leakage of fluid great enough to form drops but not enough to cause drops to drip from item being checked/inspected.

Class III: Leakage of fluid great enough to form drops that fall from the item being checked/inspected.

PREVENTIVE MAINTENANCE CHECKS AND SERVICES (PMCS)

Prior to performing your PMCS, check with your PLL clerk to verify that the latest publications are being used by the operator and organizational unit.

PREVENTIVE MAINTENANCE CHECKS AND SERVICES (PMCS) - Continued

Listed below are the PMCS procedures applicable to this equipment.

PMCS - BEFORE (WP 0040)

PMCS - DURING (WP 0041)

PMCS - AFTER (WP 0042)

PMCS - WEEKLY (WP 0043)

PMCS - MONTHLY (WP 0044)

Vehicles designated or dispatched to transport Class A or B ammunition, explosives, poisons, or radioactive yellow III materials over public highways require more stringent inspections.

Daily Walk Around PMCS Diagram. This routing diagram will be of help to complete the B, D, or A PMCS. It shows the vehicle PMCS routing track, which matches the sequence of PMCS to be performed.

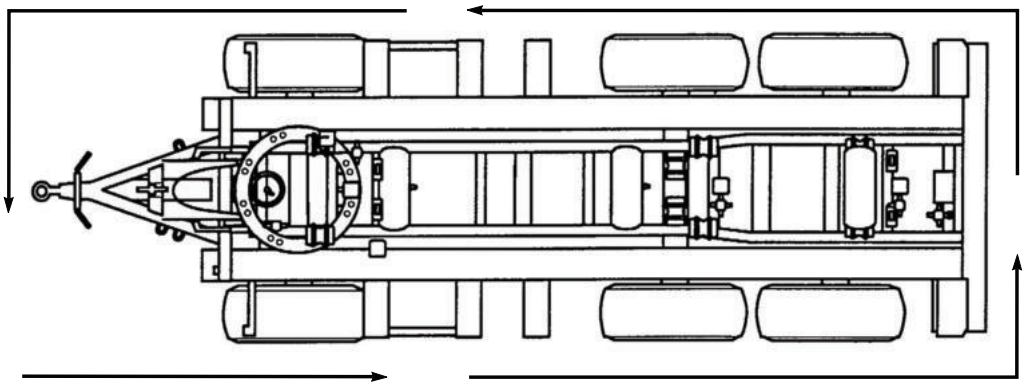

Figure 1.

END OF WORK PACKAGE

OPERATOR MAINTENANCE
OPERATOR'S PMCS - BEFORE

INITIAL SETUP:

Not Applicable

Table 1. OPERATOR'S PMCS - BEFORE

Item No.	Interval	Item to be Checked or Serviced	Procedure	Equipment Not Ready/ Available If:
1	Before	Air Lines (Connectors to Towing Vehicle).	Visually inspect intervehicular air lines (1) to the towing vehicle for cracks and damaged gladhand seals (2).	Intervehicular cables and gladhand seals are damaged or missing.

Table 1. OPERATOR'S PMCS - BEFORE - Continued

Item No.	Interval	Item to be Checked or Serviced	Procedure	Equipment Not Ready/ Available If:

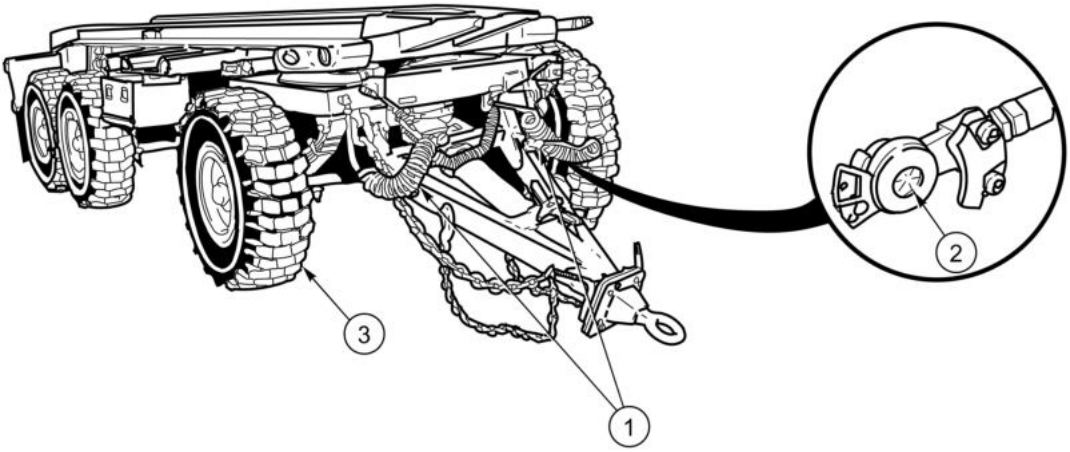

Figure 1.

			CAUTION • Do not increase engine speed of the PLS above 1,200 RPM or pull trailer more than 2.0 ft (609.6 mm). Failure to comply may result in damage to equipment. • Trailer must be unloaded prior to performing brake test. Failure to comply may result in damage to equipment.	
2	Before	Brakes		

Table 1. OPERATOR'S PMCS - BEFORE - Continued

Item No.	Interval	Item to be Checked or Serviced	Procedure	Equipment Not Ready/ Available If:
			NOTE Trailer air system must be fully charged to 120 psi (827 kPa). Check operation of trailer handbrake control (1) by connecting trailer (WP 0010) to towing vehicle or to vehicle other than PLS (WP 0012).	

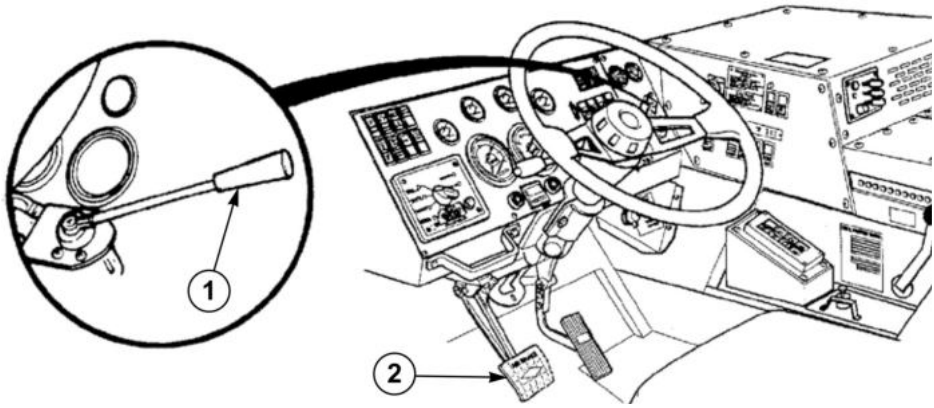

Figure 2.

			With engine at idle, apply service brake pedal (2). Engage transmission range selector to Drive (D).	

Table 1. OPERATOR'S PMCS - BEFORE - Continued

Item No.	Interval	Item to be Checked or Serviced	Procedure	Equipment Not Ready/ Available If:
			Fully apply trailer handbrake control (1).	
			Release service brake pedal (2).	
			Gradually increase engine speed to 900 RPM for PLS or 1,100 RPM.	
			Trailer brakes should hold vehicle in place.	Trailer brakes do not hold vehicle in place.
			Reduce engine rpm to idle.	
			Apply service brake pedal (2).	

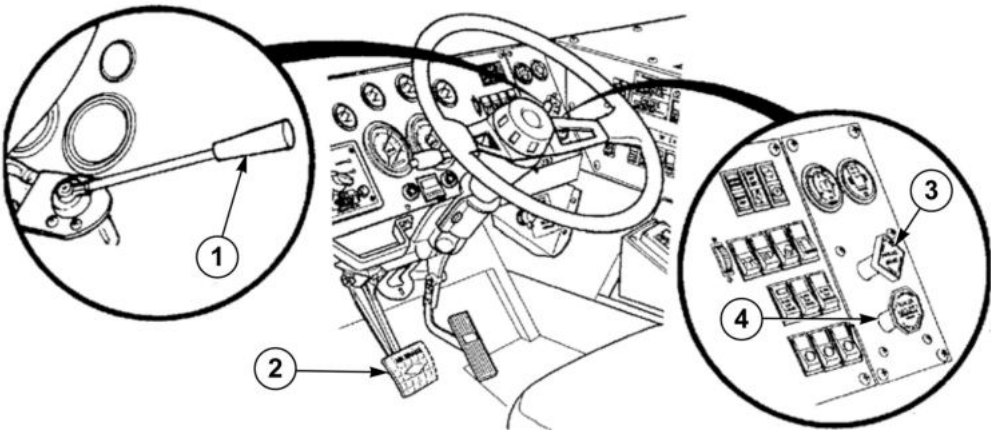

Figure 3.

Table 1. OPERATOR'S PMCS - BEFORE - Continued

Item No.	Interval	Item to be Checked or Serviced	Procedure	Equipment Not Ready/ Available If:
			Release trailer handbrake control (1).	
			Apply parking brake (3) and pull out trailer air supply control (4).	
			Engage transmission drive selector to Neutral (N).	
			Check trailer emergency brake operation.	
			With engine at idle, apply service brake pedal (2).	
			Pull out trailer air supply knob (4).	
			Engage transmission range selector to Drive (D).	
			Release service brake pedal (2).	
			Gradually increase engine speed to 900 RPM for PLS.	
			Trailer brakes should hold vehicle in place.	Trailer brakes do not hold vehicle in place.
			Reduce engine RPM to idle.	
			Apply service brake pedal (2).	
			Apply parking brake (3).	

Table 1. OPERATOR'S PMCS - BEFORE - Continued

Item No.	Interval	Item to be Checked or Serviced	Procedure	Equipment Not Ready/ Available If:
			Engage transmission drive selector to Neutral (N).	
3	Before	Fire Extinguisher	Visually inspect for missing, damaged, or loose fire extinguisher (1). Check for proper pressure/seal (2) condition.	

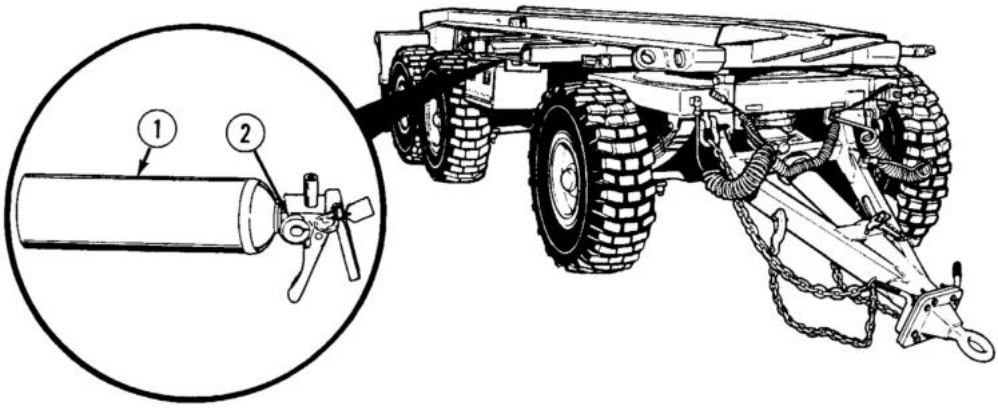

Figure 4.

			NOTE • Blackout lights will operate only with 24 volt connector.	

Table 1. OPERATOR'S PMCS - BEFORE - Continued

Item No.	Interval	Item to be Checked or Serviced	Procedure	Equipment Not Ready/ Available If:
			• Checking condition of lights is a safety task that would not be performed under combat conditions, see AR 385-10 (WP 0048).	
4	Before	Lights	Operate the vehicle light switches through all settings and check all trailer lights (1) for proper operation or damage.	

Table 1. OPERATOR'S PMCS - BEFORE - Continued

Item No.	Interval	Item to be Checked or Serviced	Procedure	Equipment Not Ready/ Available If:

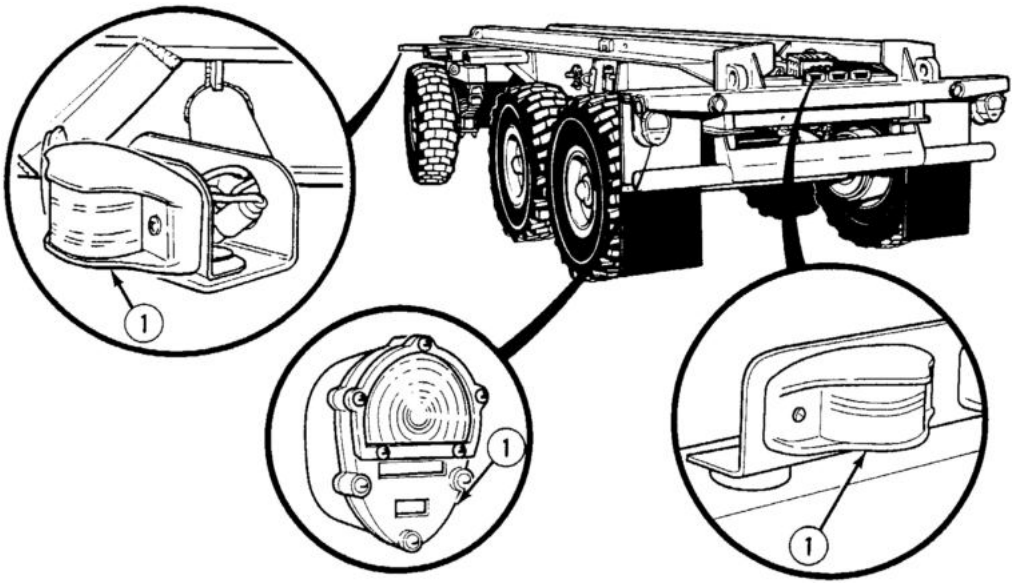

Figure 5.

END OF WORK PACKAGE

OPERATOR MAINTENANCE
OPERATOR'S PMCS - DURING

INITIAL SETUP:

Not Applicable

Table 1. OPERATOR'S PMCS - DURING

Item No.	Interval	Item to be Checked or Serviced	Procedure	Equipment Not Ready/ Available If:
1	During	Load Locks	Operate button (1) and extend and retract load locks (2).	One or more load locks will not operate.

Table 1. OPERATOR'S PMCS - DURING - Continued

Item No.	Interval	Item to be Checked or Serviced	Procedure	Equipment Not Ready/ Available If:

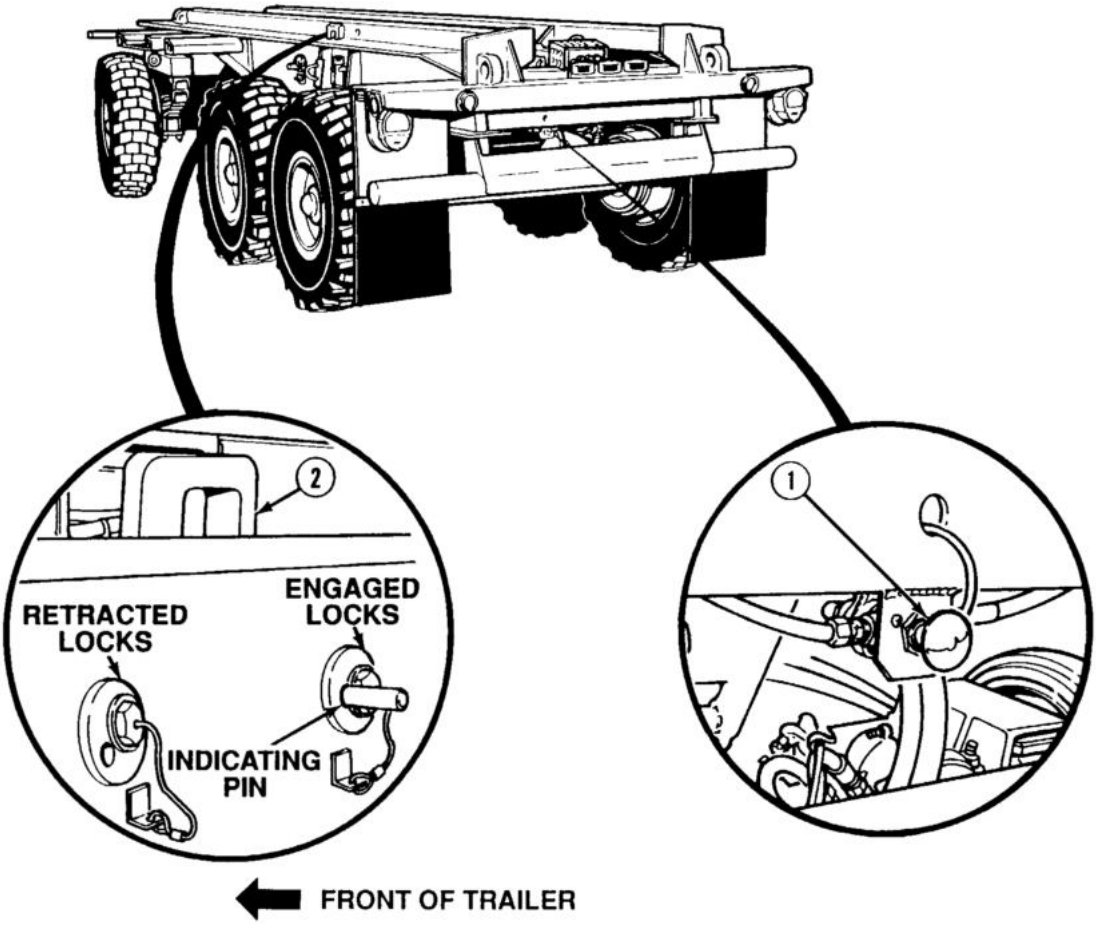

Figure 1.

END OF WORK PACKAGE

OPERATOR MAINTENANCE
OPERATOR'S PMCS - AFTER

INITIAL SETUP:

Not Applicable

Table 1. OPERATOR'S PMCS - AFTER

Item No.	Interval	Item to be Checked or Serviced	Procedure	Equipment Not Ready/ Available If:
1	After	Drawbar and Drawbar Extension (If Equipped)	Visually inspect drawbar (1) and drawbar extension (2), if equipped, for obvious damage, missing parts, or cracks.	Drawbar has obvious cracks, damage, or missing parts that would impair operation.

Table 1. OPERATOR'S PMCS - AFTER - Continued

Item No.	Interval	Item to be Checked or Serviced	Procedure	Equipment Not Ready/ Available If:

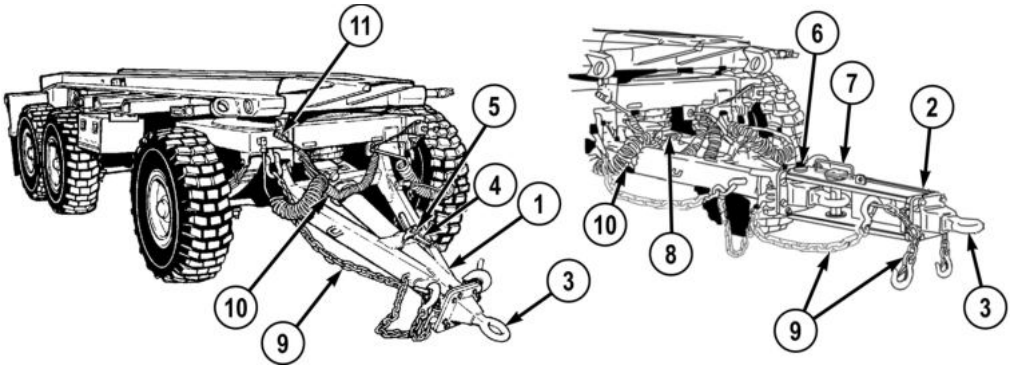

Figure 1.

2	After	Drawbar Tow Ring	Check for loose or bent tow ring (3). If looseness or bending is found, notify Field Maintenance.	Drawbar tow ring is loose or bent.
3	After	Drawbar Locking Pin	Visually inspect drawbar locking pin (4) and latch (5) for missing or broken parts.	Drawbar locking pin is missing or locking latch is missing or damaged.
4	After	Drawbar Extensio n Pivot Pin (If Equipped)	Rotate drawbar extension (2) from stow to forward position. Check for binding at pivot pin (6).	Draw bar extension binds or is damaged.

Table 1. OPERATOR'S PMCS - AFTER - Continued

Item No.	Interval	Item to be Checked or Serviced	Procedure	Equipment Not Ready/ Available If:
5	After	Drawbar Extension D-Ring Assembly (If Equipped)	Visually inspect Drawbar D-ring assembly (7) for missing or broken parts.	Drawbar extension D-ring assembly has missing or damaged parts.
6	After	Drawbar Extension Safety Strap (If Equipped)	Visually inspect drawbar extension safety strap (8) for missing parts or obvious damage.	Drawbar extension safety strap is missing, has missing parts or has damage that impairs operation.
7	After	Safety Chains	Visually inspect safety chains (9) for obvious damage or missing parts.	Safety chains are missing, have missing parts or have damage that impair operation.
8	After	Intervehicular Power Cables	Visually inspect intervehicular power cables (10) and load lock status line (11) for obvious damage or damaged pin connectors.	Intervehicular power cables or load lock status line is missing or have damaged or broken pin con-

Table 1. OPERATOR'S PMCS - AFTER - Continued

Item No.	Interval	Item to be Checked or Serviced	Procedure	Equipment Not Ready/ Available If:
				nectors that would impair operation.
9	After	Wheels and Tires	**WARNING**  While changing tires or while performing tire maintenance, stay out of the trajectory as shown by the area indicated. Failure to comply may result in injury or death to personnel. **NOTE** Trajectory area as shown applies to all wheel/tire assemblies. Visually inspect tires (1) for cuts, gouges, cracks, and foreign objects. Check for missing valve stem caps (2).	Tires missing or unserviceable.

Table 1. OPERATOR'S PMCS - AFTER - Continued

Item No.	Interval	Item to be Checked or Serviced	Procedure	Equipment Not Ready/ Available If:

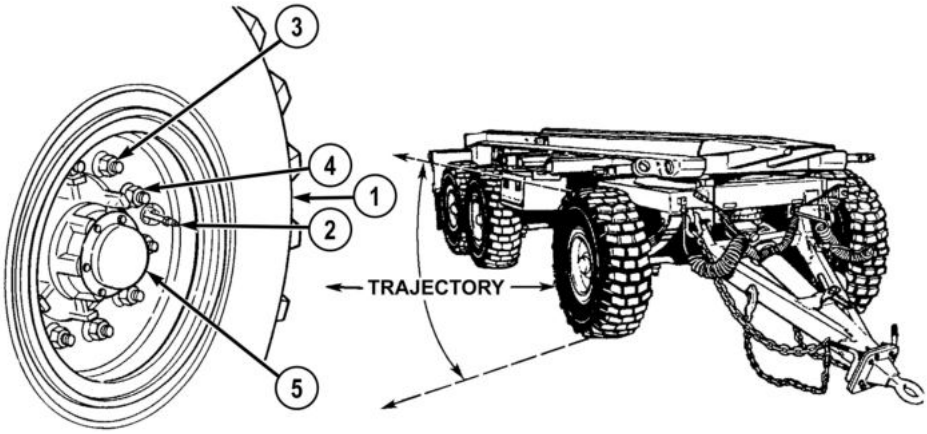

Figure 2.

			Check for missing, cracked, and broken studs (3) and lugnuts (4). Check for damaged wheel end covers (5).	One or more studs or lugnuts are missing from the same wheel.

Table 1. OPERATOR'S PMCS - AFTER - Continued

Item No.	Interval	Item to be Checked or Serviced	Procedure	Equipment Not Ready/ Available If:
10	After	Spare Tire	**WARNING**  While changing tires or while performing tire maintenance, stay out of the trajectory as shown by the area indicated. Failure to comply may result in injury or death to personnel. **NOTE** Trajectory area as shown applies to all wheel/tire assemblies. Visually inspect spare tire (1) for cuts, gouges, cracks, and foreign objects. Spare tire is missing, deflated, or unserviceable.	Check spare tire for proper inflation. (WP 0047)

Table 1. OPERATOR'S PMCS - AFTER - Continued

Item No.	Interval	Item to be Checked or Serviced	Procedure	Equipment Not Ready/ Available If:

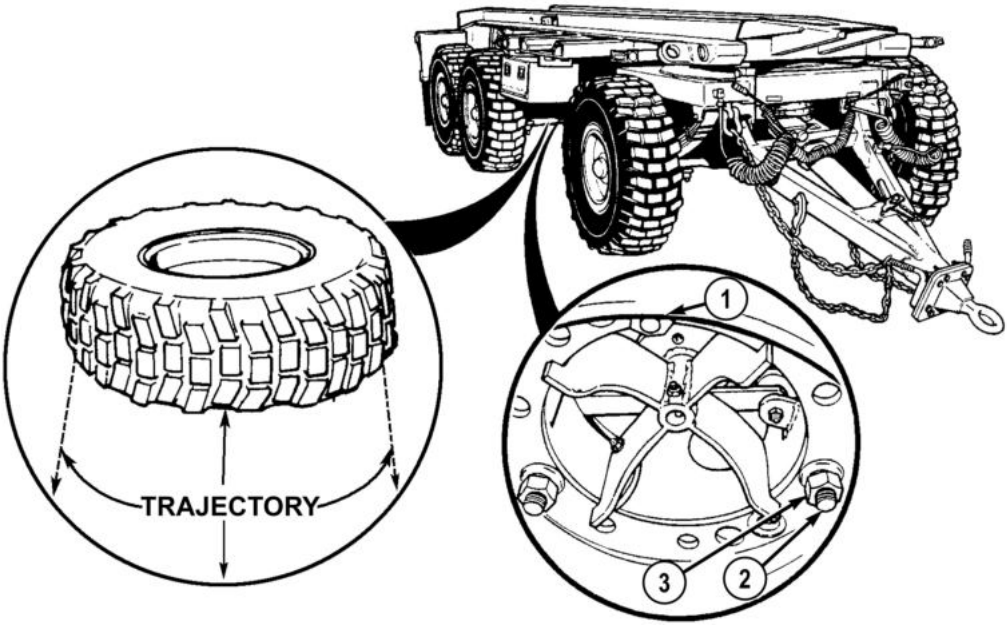

Figure 3.

			Check for missing, cracked, and broken studs (2) and lugnuts (3).	One or more studs or lugnuts are missing from spare tire.
11	After	Air Reservoirs	Pull cable (1) on all three air reservoirs and observe air stream for presence of moisture. Drain air until only air comes out.	

Table 1. OPERATOR'S PMCS - AFTER - Continued

Item No.	Interval	Item to be Checked or Serviced	Procedure	Equipment Not Ready/ Available If:
12	After	Air Assist	**NOTE** Air assist system must be charged in order for air bag to function (WP 0023). Check air assist lever (1) for proper operation. Drawbar (2) should raise and lower freely.	

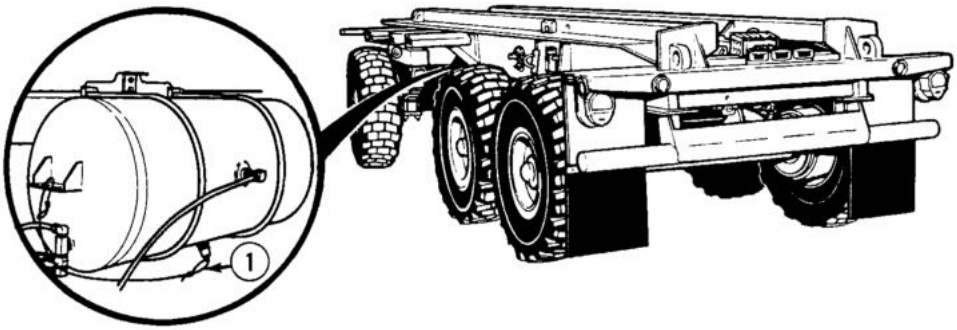

Figure 4.

Table 1. OPERATOR'S PMCS - AFTER - Continued

Item No.	Interval	Item to be Checked or Serviced	Procedure	Equipment Not Ready/ Available If:

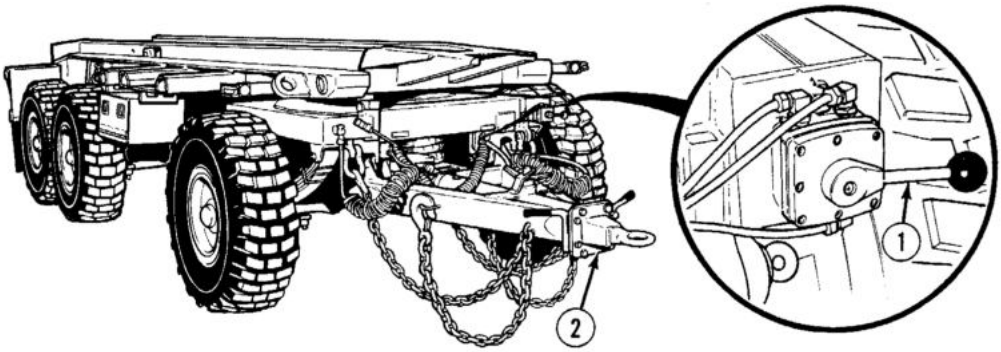

Figure 5.

END OF WORK PACKAGE

OPERATOR MAINTENANCE
OPERATOR'S PMCS - WEEKLY

INITIAL SETUP:

Not Applicable

Table 1. OPERATOR'S PMCS - WEEKLY

Item No.	Interval	Item to be Checked or Serviced	Procedure	Equipment Not Ready/ Available If:
1	Weekly	Frame	Walk around trailer and visually inspect for obvious damage to trailer frame (1) and stowage box (2).	Trailer has damage to frame that would impair operation.

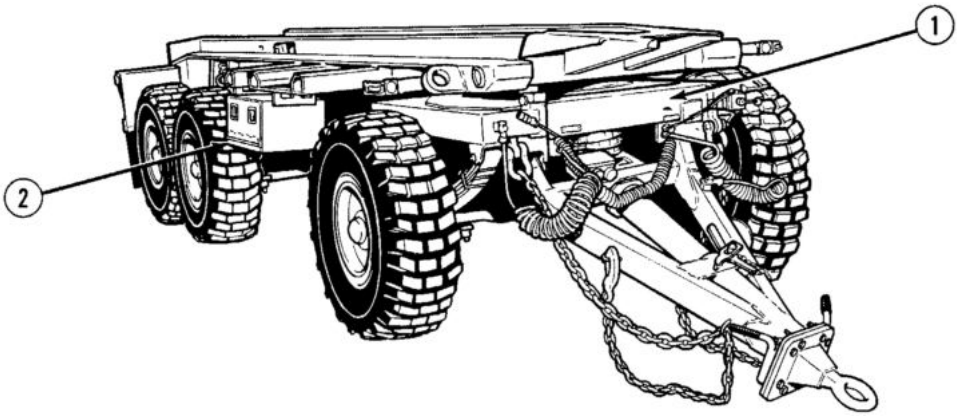

Figure 1.

Table 1. OPERATOR'S PMCS - WEEKLY - Continued

Item No.	Interval	Item to be Checked or Serviced	Procedure	Equipment Not Ready/ Available If:
2	Weekly	Shock Absorber s	Visually check shock absorbers (1) for leaks or obvious damage.	Damage to shock absorbers that would impair operation.

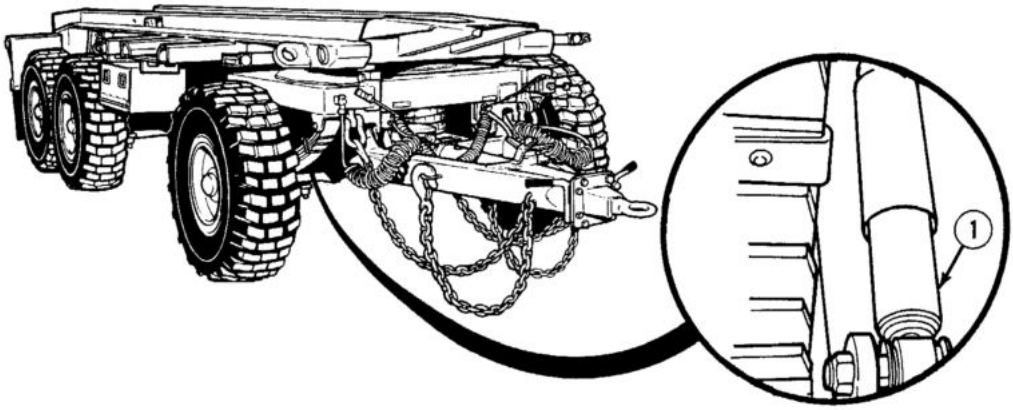

Figure 2.

			WARNING  While changing tires or while performing tire maintenance, stay out of the trajectory as shown by the area indicated.	

Table 1. OPERATOR'S PMCS - WEEKLY - Continued

Item No.	Interval	Item to be Checked or Serviced	Procedure	Equipment Not Ready/ Available If:
3	Weekly	Tire Pressure	Failure to comply may result in injury or death to personnel. **WARNING**  Under some circumstances, the trajectory may deviate from its expected path. Failure to comply may result in injury or death to personnel. **NOTE** Trajectory area as shown applies to all wheel/tire assemblies. Check tires for proper inflation. Inflate as required. (WP 0047)	Any tire deflated.

Table 1. OPERATOR'S PMCS - WEEKLY - Continued

Item No.	Interval	Item to be Checked or Serviced	Procedure	Equipment Not Ready/ Available If:

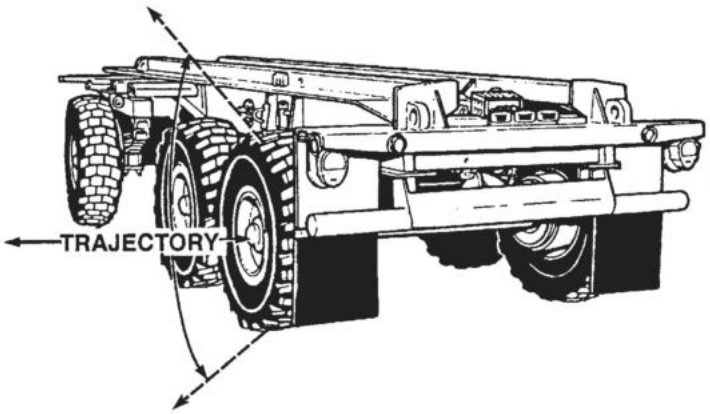

COLD TIRE PRESSURE (PSI)

TERRAIN	FRONT AXLE
HIGHWAY	87
CROSS COUNTRY	51
MUD, SAND, SNOW	32
	REAR TANDEM
HIGHWAY	80
CROSS COUNTRY	46
MUD, SAND, SNOW	29

Figure 3.

END OF WORK PACKAGE

OPERATOR MAINTENANCE
OPERATOR'S PMCS - MONTHLY

INITIAL SETUP:

Not Applicable

Table 1. OPERATOR'S PMCS - MONTHLY

Item No.	Interval	Item to be Checked or Serviced	Procedure	Equipment Not Ready/ Available If:
1	Monthly	Mudflaps	Visually inspect mudflaps for missing parts or torn rubber.	

END OF WORK PACKAGE

CHAPTER 5

MAINTENANCE INSTRUCTIONS

OPERATOR MAINTENANCE
TIRE REPLACEMENT

INITIAL SETUP:

Tools and Special Tools
Jack, Hydraulic (WP 0049)
Handle, Sliding (WP 0049)
Socket, Impact 1-1/2 in (WP 0049)
Wrench, Extension (WP 0049)
Wrench, Impact (WP 0049)

Personnel Required
Wheeled Vehicle Mechanic 63B (2)

References
TM 9-2610-200-14 (WP 0048)

Equipment Condition
Wheels chocked. (WP 0021)
Parking brake applied. (WP 0016)
Spare tire removed. (WP 0046)

REMOVAL

WARNING

If the tire has been driven on when under inflated or overinflated or there is obvious or suspected damage on the tire or wheel components, the tire must be completely deflated. To deflate the tire, remove the valve core from the valve stem and stand out of the trajectory area. Failure to comply may result in injury or death to personnel.

WARNING

Place wheel/tire assembly in safety guard prior to initial inflation. Failure to comply may result in injury or death to personnel.

REMOVAL - Continued

WARNING

Tire air pressure must be checked properly. Failure to comply may result in injury or death to personnel.

WARNING

If tire has been run flat, or is over or under inflated when tire is measured and operating terrain is compared to Unsafe Tire Inflation Pressures, or if wheel/tire assembly has obvious or suspected damage, it is not safe to adjust tire pressure. Completely deflate tire (WP 0047) and remove tire from axle. Failure to follow these procedures may result in injury or death to personnel.

CAUTION

Check tire pressure before operation when tire is still cold to obtain proper value. Failure to comply may result in damage to equipment.

NOTE

Trajectory area as shown applies to all wheel/tire assemblies.

1. Take tire pressure reading on tire/wheel to be changed and compare reading to Table 1. If tire is overinflated or underinflated or there is obvious or suspected damage to wheel or tire, completely deflate tire before removing from trailer (WP 0047).

Table 1.

	Front Tires Are:	**Rear Tires Are:**	**Front Tires Are:**	**Rear Tires Are:**
	Overinflated. Tire pressure measured is 25% or more	Overinflated. Tire pressure measured is 25% or more	Underinflated. Tire pressure measured is 80% or less	Underinflated. Tire pressure measured is 80% or less

REMOVAL - Continued

Table 1. - Continued

	Front Tires Are:	**Rear Tires Are:**	**Front Tires Are:**	**Rear Tires Are:**
	above standard pressure. Do not adjust pressure if above pressure shown below.	above standard pressure. Do not adjust pressure if above pressure shown below.	than the standard tire pressure. Do not adjust pressure if below pressure shown below.	than the standard tire pressure.Do not adjust pressure if below pressure shown below.
Highway	109 psi (752 kPa)	100 psi (690 kPa)	70 psi (483 kPa)	64 psi (441 kPa)
Cross-Country	64 psi (441 kPa)	58 psi (400 kPa)	41 psi (283 kPa)	37 psi (255 kPa)
Mud, Sand and Snow	40 psi (276 kPa)	36 psi (248 kPa)	26 psi (179 kPa)	23 psi (159 kPa)

WARNING

Never crawl under trailer when performing maintenance unless trailer is securely blocked. Trailer may fall. Failure to comply may result in injury or death to personnel.

2. Position jack on chock block and install under axle (1) to be raised.

REMOVAL - Continued

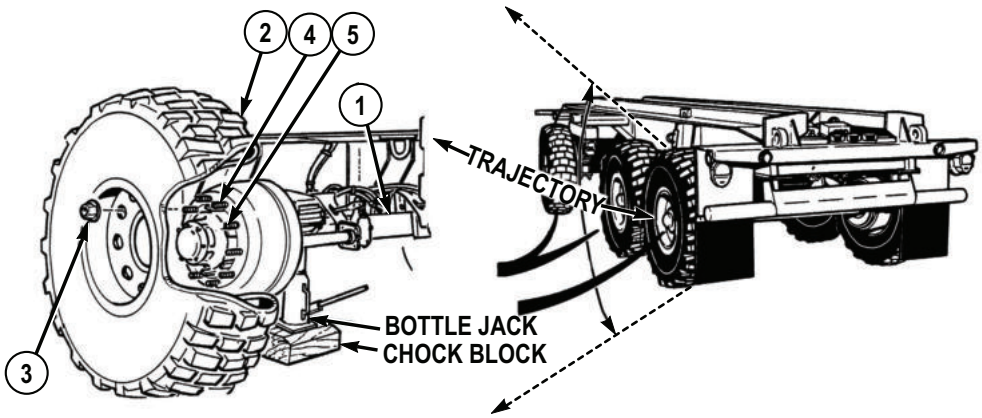

Figure 1.

3. Raise jack until tire (2) clears ground.
4. Remove ten lugnuts (3) from wheel studs (4).

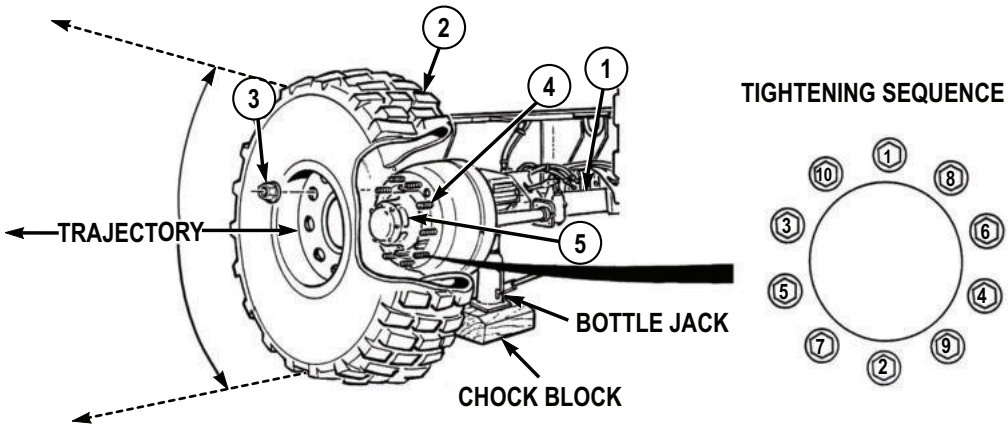

Figure 2.

REMOVAL - Continued

WARNING

Spare tire weighs 425 lbs (193 kg). Keep all personnel clear from under spare tire. Failure to comply may result in injury or death to personnel.

5. With the aid of an assistant, remove tire (2) from wheel hub (5).

END OF TASK

INSTALLATION

WARNING

Never crawl under trailer when performing maintenance unless trailer is securely blocked. Trailer may fall. Failure to comply may result in injury or death to personnel.

WARNING

Spare tire weighs 425 lbs (193 kg). Keep all personnel clear from under spare tire. Failure to comply may result in injury or death to personnel.

1. Position tire (2) on wheel hub (5).

INSTALLATION - Continued

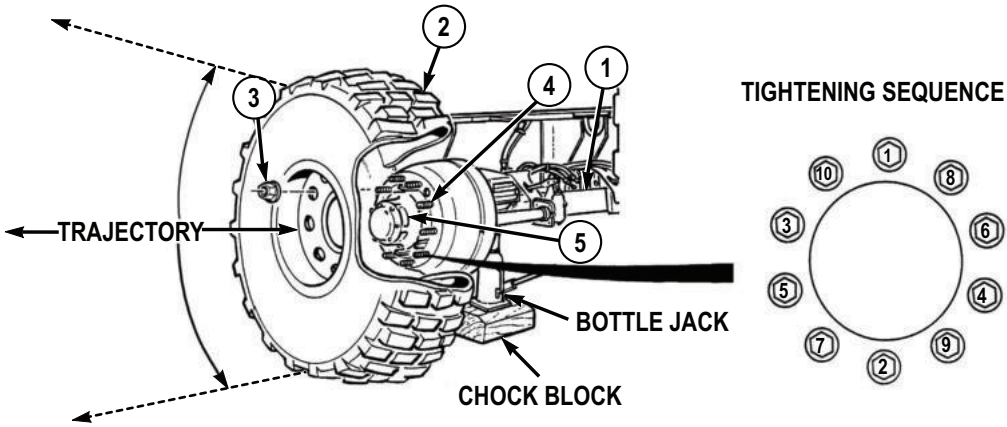

Figure 3.

2. Install ten lugnuts (3) on wheel studs (4). Tighten lugnuts using tightening sequence shown.

WARNING

When returning axle to the ground, ensure personnel are out of the trajectory as shown by the area indicated. Failure to comply may result in injury or death to personnel.

3. Lower and remove jack and chock block from axle (1).

END OF TASK

FOLLOW-ON MAINTENANCE

1. Stow defective tire on spare tire bracket. (WP 0046)
2. Remove wheel chocks. (WP 0021)
3. Report to Field Maintenance to torque lugnuts as soon as possible.

END OF WORK PACKAGE

OPERATOR MAINTENANCE
SPARE TIRE REPLACEMENT

INITIAL SETUP:

Tools and Special Tools
Handle, Sliding (WP 0049)
Socket, Impact 1-1/2 in. (WP 0049)
Wrench, Extension (WP 0049)
Wrench, Impact (WP 0049)

Personnel Required
Wheeled Vehicle Mechanic 63B (2)

References
TM 9-2610-200-14 (WP 0048)

Equipment Condition
Wheels chocked. (WP 0021)

REMOVAL

WARNING

Spare tire weighs 425 lbs (193 kg). Keep all personnel clear from under spare tire. Failure to comply may result in injury or death to personnel.

WARNING

Ensure all personnel wear suitable eye protection while lowering spare tire. Failure to comply may result in injury or death to personnel.

REMOVAL - Continued

WARNING

Ensure personnel are positioned under trailer only far enough to perform procedure. Do not position entire body under tire unless required. Failure to comply may result in injury or death to personnel.

WARNING

If the tire is under inflated or overinflated, or there is obvious or suspected damage on the tire or wheel components, the tire must be completely deflated by attaching inflator gauge to valve stem. Inflator gauge must not be hooked up to air hose. Press down inflator gauge handle until all air pressure has been exhausted. Stand out of the trajectory area. Failure to comply may result in injury or death to personnel.

WARNING

Place wheel/tire assembly in safety guard prior to initial inflation. Failure to comply may result in injury or death to personnel.

WARNING

While changing tires or while performing tire maintenance, stay out of the trajectory as shown by the area indicated. Failure to comply may result in injury or death to personnel.

REMOVAL - Continued

WARNING

Tire air pressure must be checked properly. Failure to comply may result in injury or death to personnel.

WARNING

If tire has been run flat, or is over or under inflated when tire is measured and operating terrain is compared to Unsafe Tire Inflation Pressures, or if wheel/tire assembly has obvious or suspected damage, it is not safe to adjust tire pressure. Completely deflate tire (WP 0047) and remove tire from axle. Failure to follow these procedures may result in injury or death to personnel.

NOTE

- Air wrench from PLS vehicle may be used in place of sliding handle and extension wrench.
- Trajectory area as shown applies to all wheel/tire assemblies.

Table 1.

	Spare Tire Is:	**Spare Tire Is:**
	Overinflated. Tire pressure measured is 25% or more above standard pressure.Do not adjust pressure if above pressure shown above.	Underinflated. Tire pressure measured is 80% or less than the standard tire pressure.Do not adjust pressure if below pressure shown below.
Spare Tire Pressure	109 psi (752 kPa)	70 psi (483 kPa)

REMOVAL - Continued

1. Take tire pressure reading on spare tire and compare reading to Table 1. If tire is overinflated or underinflated or there is obvious or suspected damage to tire or wheel components, completely deflate tire (WP 0047) and stand out of trajectory range before lowering tire from trailer.
2. Remove slide handle, extension wrench and socket from stowage box (1).

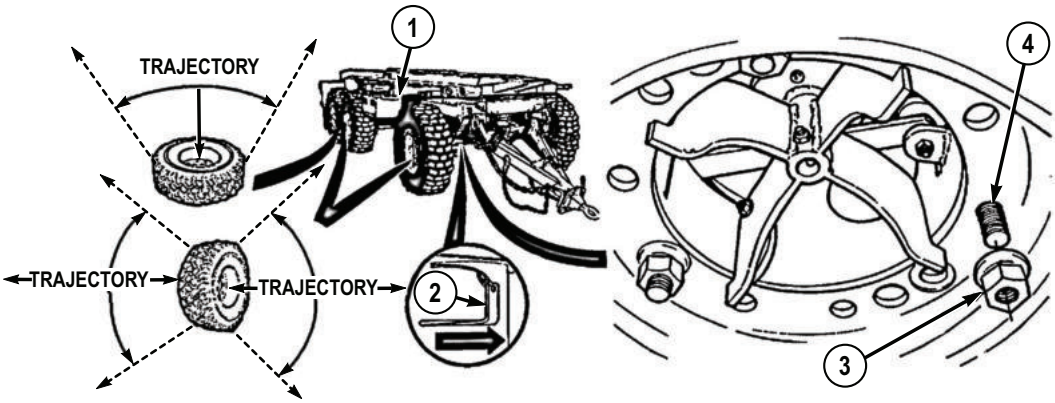

Figure 1.

3. Ensure handle (2) is in LOCKED position.
4. Remove three nuts (3) from studs (4).

WARNING

Ensure slide handle or air wrench and socket are held securely in place while lowering spare tire. Failure to comply may result in injury to personnel and/or damage to equipment.

REMOVAL - Continued

WARNING

Wear hearing protection when lowering spare tire. Failure to comply may result in injury or death to personnel.

CAUTION

Ensure safety latch is held in release position until spare tire is lowered to ground. If safety latch is not held in release position, spare tire will not lower to ground.

5. Pull safety latch cable (5) to UNLOCK position and turning winch bolt assembly (6) counterclockwise; lower spare tire (7) approximately 4 in. (102 mm) from spare tire bracket (8).

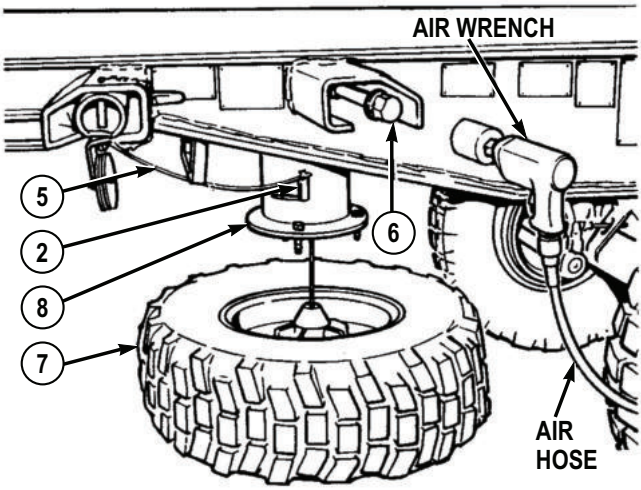

Figure 2.

REMOVAL - Continued

WARNING

Ensure all personnel wear protective gloves when handling cable. Cable may fray. Failure to comply may result in injury or death to personnel.

6. Release safety latch cable (5).
7. Turning winch bolt assembly (6) counterclockwise, lower spare tire (7).
8. Remove lift assembly (9) from spare tire (7).

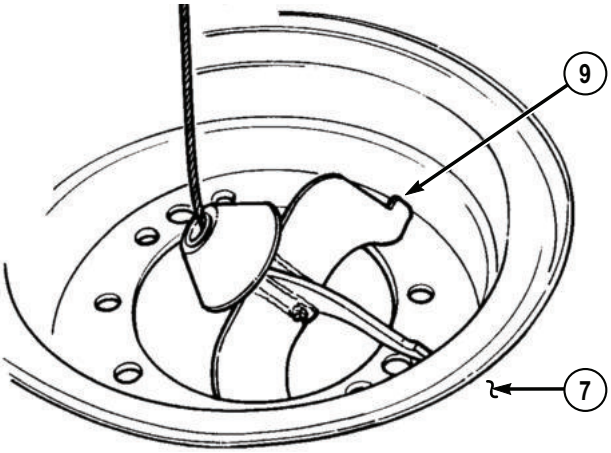

Figure 3.

9. Install lift assembly hook (10) in spare tire stud hole (11).

REMOVAL - Continued

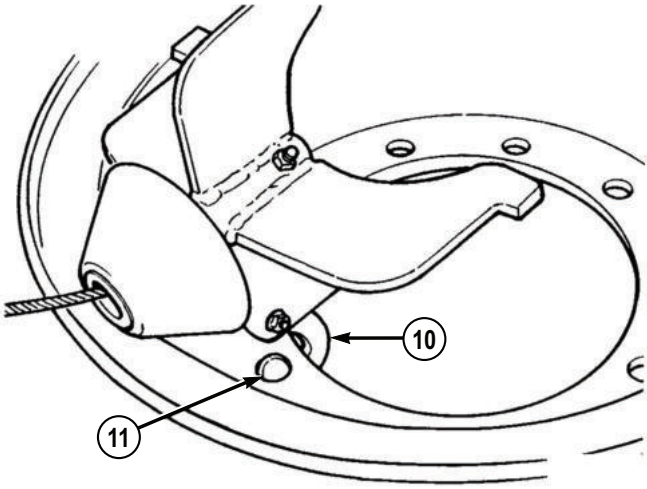

Figure 4.

10. Remove safety clip (12) and pin (13) from pulley assembly (14).

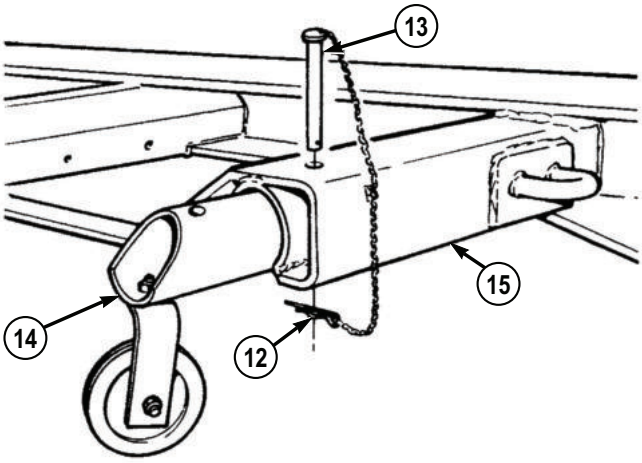

Figure 5.

11. Extend pulley assembly (14) until second hole lines up with hole in support (15).
12. Install pin (13) and safety clip (12) in pulley assembly (14).

REMOVAL - Continued

WARNING

Ensure all personnel wear protective gloves when handling cable. Cable may fray. Failure to comply may result in injury or death to personnel.

13. Turning winch bolt assembly (6) counterclockwise, remove 10 ft (3 m) of cable (16) from winch assembly.

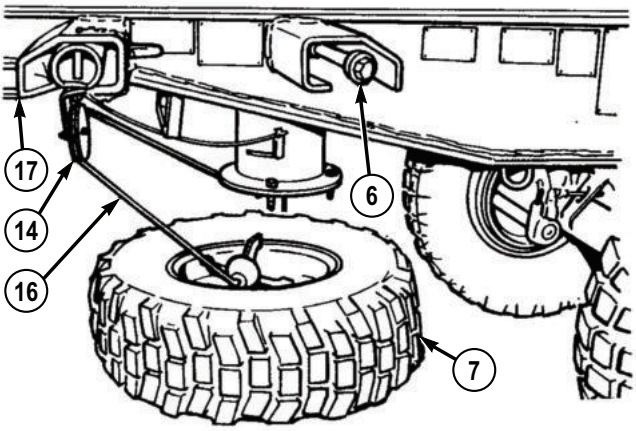

Figure 6.

14. Install cable (16) on pulley assembly (14).

CAUTION

To prevent knotting and binding, ensure there is tension on cable when reeling it in. Failure to comply may result in damage to equipment.

15. Turn rod assembly (6) clockwise and remove spare tire (7) from under trailer (17).

REMOVAL - Continued

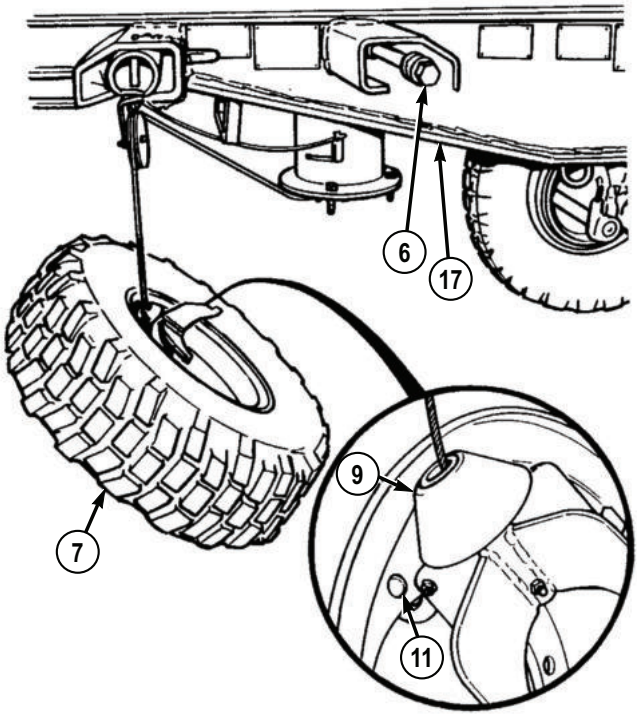

Figure 7.

WARNING

Spare tire weighs 425 lbs (193 kg). Keep all personnel clear from under spare tire. Failure to comply may result in injury or death to personnel.

16. Turn rod assembly (6) clockwise and raise spare tire (7) to upward position.
17. With the aid of an assistant, support spare tire (7) and remove lift assembly (9) from spare tire stud hole (11).
18. With the aid of an assistant, position spare tire (7) against trailer (17).
19. Remove cable (16) from pulley assembly (14).

REMOVAL - Continued

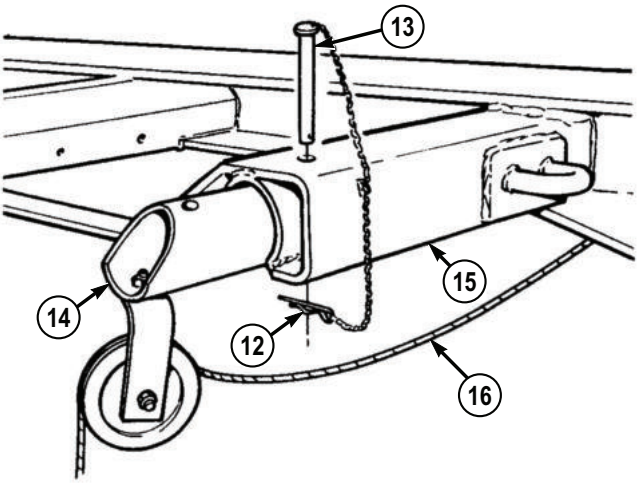

Figure 8.

20. Remove safety clip (12) and pin (13) from pulley assembly (14).
21. Retract pulley assembly (14) to stow position in support (15) and install pin (13) and safety clip (12) in pulley assembly.
22. Change tire (WP 0045).

END OF TASK

INSTALLATION

WARNING

Ensure all personnel wear suitable eye protection while lowering spare tire. Failure to comply may result in injury or death to personnel.

INSTALLATION - Continued

WARNING

Ensure personnel are positioned under trailer only far enough to perform procedure. Do not position entire body under tire unless required. Failure to comply may result in injury or death to personnel.

WARNING

Spare tire weighs 425 lbs (193 kg). Keep all personnel clear from under spare tire. Failure to comply may result in injury or death to personnel.

WARNING

Place wheel/tire assembly in safety guard prior to initial inflation. Failure to comply may result in injury or death to personnel.

1. Position spare tire (1) on flat surface with inside of rim (2) facing up.

INSTALLATION - Continued

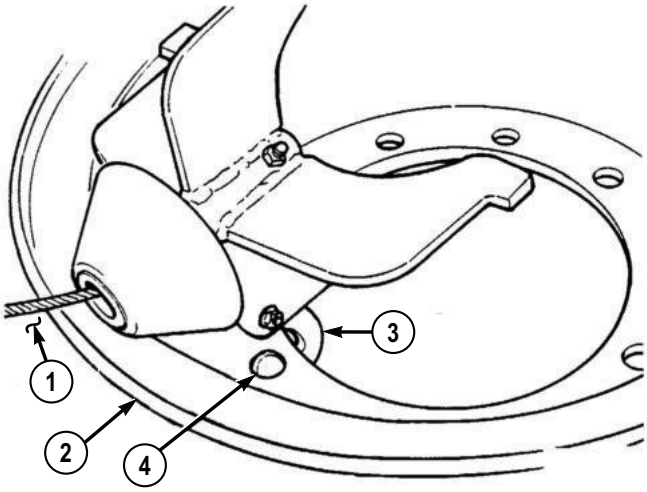

Figure 9.

CAUTION

- Ensure lift assembly does not enter stud holes in rim of spare tire or spare tire will not be installed properly on spare tire bracket.
- To prevent knotting and binding, ensure there is tension on cable when reeling it in. Failure to comply may result in damage to equipment.

2. Install lift assembly hook (3) in stud hole (4) of spare tire (1).

WARNING

Ensure all personnel wear protective gloves when handling cable. Cable may fray. Failure to comply may result in injury or death to personnel.

INSTALLATION - Continued

WARNING

Wear hearing protection when lowering spare tire. Failure to comply may result in injury or death to personnel.

3. Turn rod assembly (5) clockwise and slide spare tire (1) under spare tire bracket (6) on trailer (7).

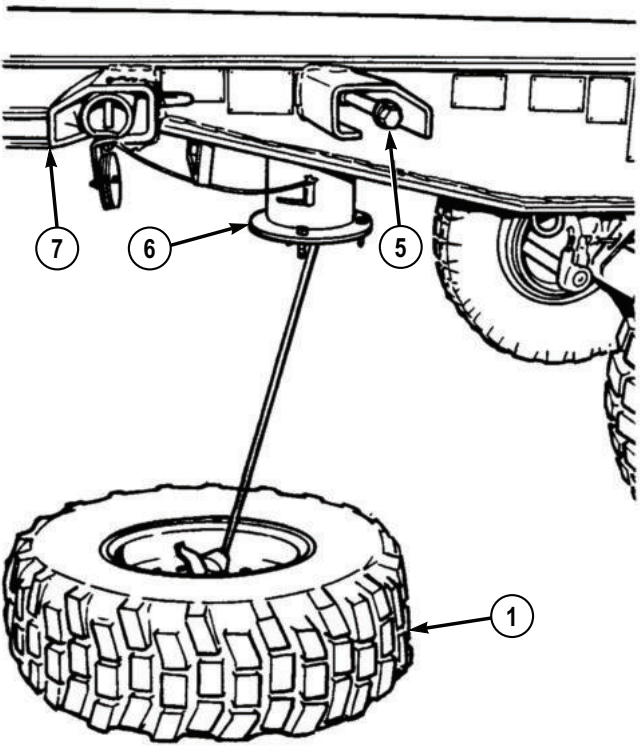

Figure 10.

4. Turn rod assembly (5) counterclockwise to loosen cable (8).

INSTALLATION - Continued

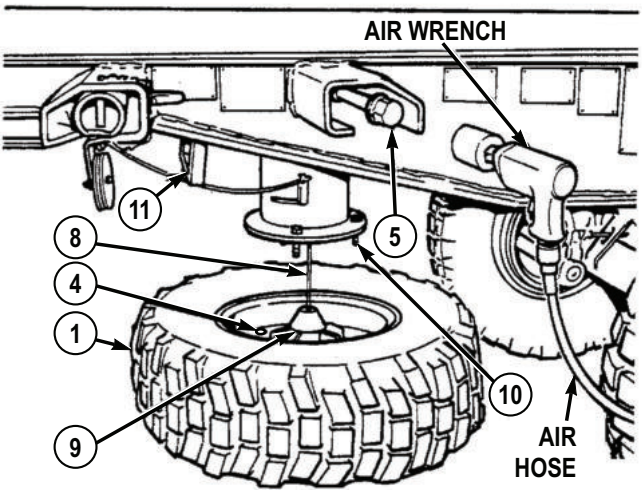

Figure 11.

5. Install lift assembly (9) on spare tire (1).

CAUTION

Ensure studs are aligned with stud holes before positioning tire on bracket. Failure to comply may cause damage to equipment.

6. Turn rod assembly (5) clockwise and raise spare tire (1) and position until studs (10) and stud holes (4) are aligned.
7. Tighten winch bolt (5) until spare tire (1) contacts both tire stops (11).
8. Ensure handle (12) is in LOCKED position.

INSTALLATION - Continued

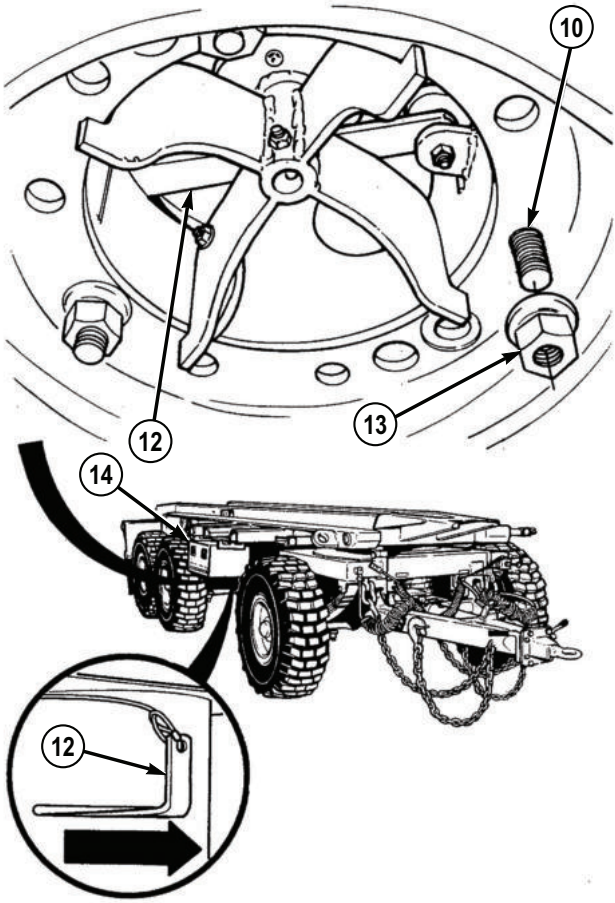

Figure 12.

9. Install three nuts (13) on studs (10).
10. Return tools to stowage box (14).

END OF TASK

FOLLOW-ON MAINTENANCE

1. Remove wheel chocks. (WP 0021)
2. Report to Field Maintenance if spare tire needs repair.

FOLLOW-ON MAINTENANCE - Continued

3. Report to Field Maintenance to torque lugnuts as soon as possible.

END OF WORK PACKAGE

OPERATOR MAINTENANCE
SERVICE TIRES

INITIAL SETUP:

Tools and Special Tools
Gauge, Inflation (WP 0049)
Hose, Air (WP 0049)

Equipment Condition
Wheels chocked. (WP 0021)

References
Parts Manual (Fig. 2028)

CHECK/ADJUST TIRE AIR PRESSURE

WARNING

Failure to comply with these procedures may result in faulty positioning of the tire and/or rim parts, and cause the assembly to burst with explosive force. Never mount or use damaged tires or rims. Failure to comply may result in injury or death to personnel.

WARNING

Before checking tire pressure, perform tire check. Failure to comply may result in injury or death to personnel.

CAUTION

Check tire pressure before operation when tire is still cold to obtain proper value. Failure to comply may result in damage to equipment.

1. Refer to Standard Tire Pressure Table below to ensure tires have correct air pressure for road condition.

CHECK/ADJUST TIRE AIR PRESSURE - Continued

Table 1.

Axle Location	Highway	Cross Country	Mud, Sand, and Snow
Front	87 psi (600 kPa)	51 psi (352 kPa)	32 psi (221 kPa)
Rear	80 psi (552 kPa)	46 psi (317 kPa)	29 psi (200 kPa)
Spare Tire	87 psi (600 kPa)	87 psi (600 kPa)	87 psi (600 kPa)

2. Remove air hose (1) and inflation gauge (2) from PLS BII storage box.

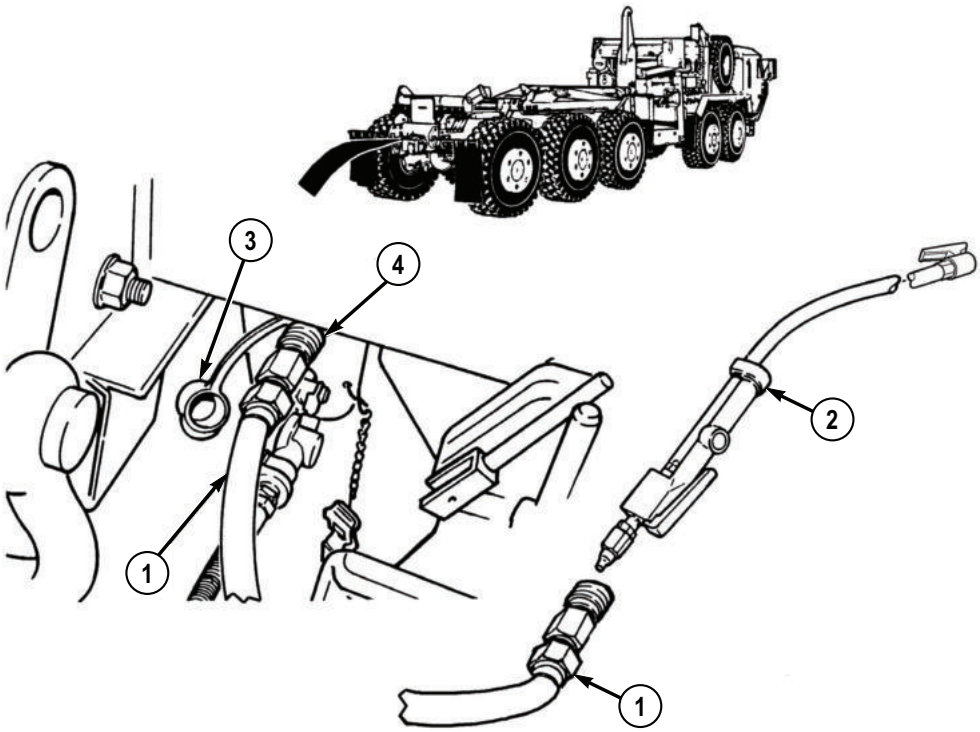

Figure 1.

3. Connect air hose (1) to inflation gauge (2).
4. Remove cover (3) from vehicle air coupler (4) and connect remaining end of air hose (1).

CHECK/ADJUST TIRE AIR PRESSURE - Continued

5. Start engine. Refer to vehicle Operator's manual. (WP 0048)
6. Remove valve stem cap (5) from valve stem (6).

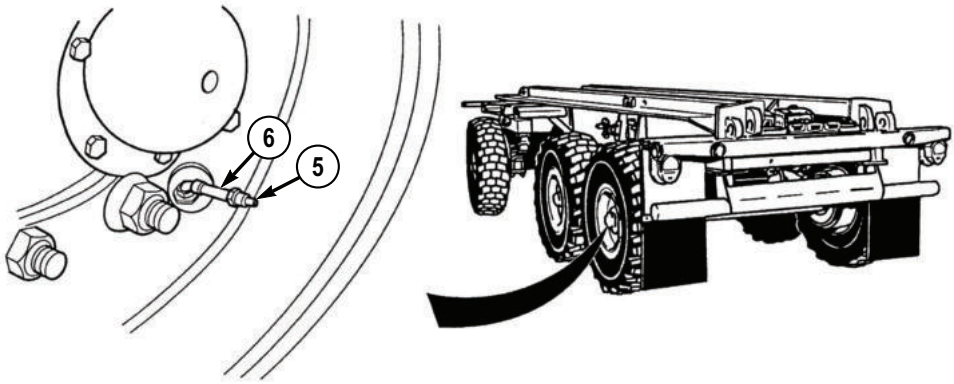

Figure 2.

WARNING

While changing tires or while performing tire maintenance, stay out of the trajectory as shown by the area indicated. Failure to comply may result in injury or death to personnel.

WARNING

Never inflate a tire without checking to ensure that the side ring is still properly seated and the lockring is properly seated in the lockring groove. Ensure that the side ring, lockring and lockring groove are not damaged. The side ring and lockring may blow off during inflation/deflation. Failure to comply may result in injury or death to personnel.

CHECK/ADJUST TIRE AIR PRESSURE - Continued

WARNING

Improperly seated lockrings and side rings may blow off at any time. Never attempt to seat a lockring or side ring during or after inflation. Failure to comply may result in injury or death to personnel.

WARNING

When inflating tires mounted on the trailer, all personnel must remain out of the trajectory of the side ring and lockring as shown by the areas indicated. Failure to comply may result in injury or death to personnel.

NOTE

- Air chuck must clamp securely with no leaks or inflation gauge readings will be inaccurate.
- Trajectory area as shown applies to all wheel/tire assemblies.

7. Push latch handles (7) inward, while pushing air chuck (8) onto valve stem (6). Release latch handle and immediately step out of the trajectory area. Check inflation gauge reading and compare to Unsafe Inflation Pressures Table below.

CHECK/ADJUST TIRE AIR PRESSURE - Continued

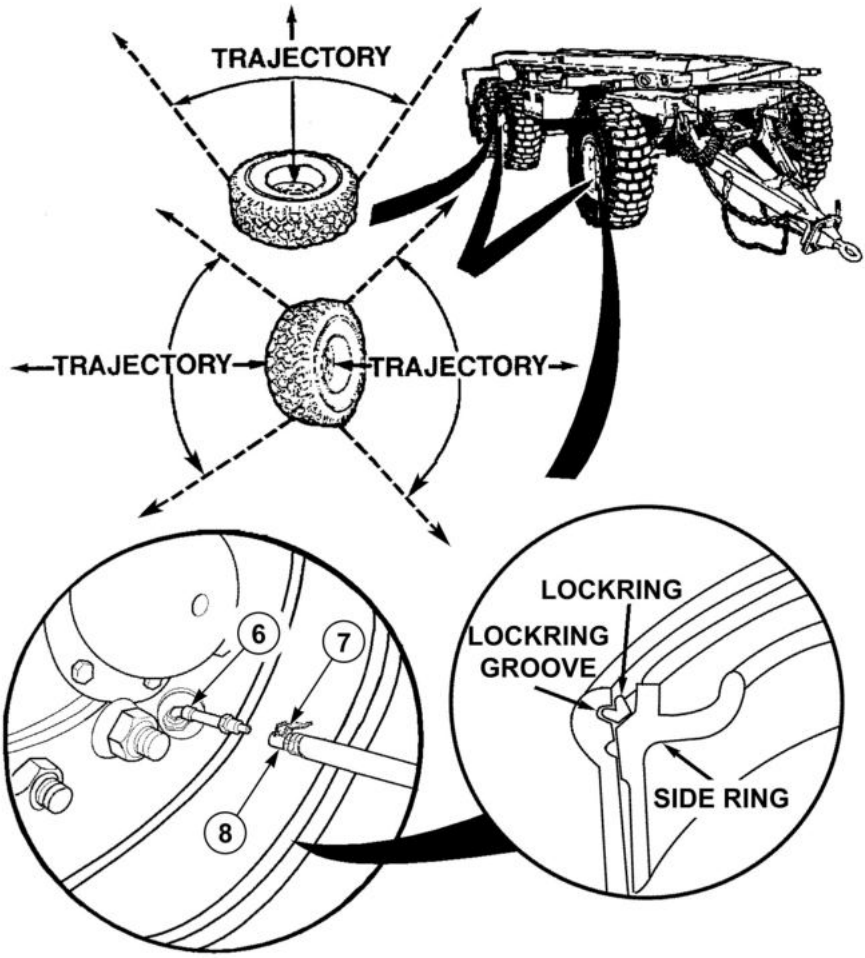

Figure 3.

Table 2.

	Spare Tire Is:	Spare Tire Is:	Front Tires Are:	Rear Tires Are:	Front Tires Are:	Rear Tires Are:
	Overinflated. Tire pressure	Underinflated. Tire pressure	Overinflated. Tire pressure	Overinflated. Tire pressure	Underinflated. Tire pressure	Underinflated. Tire pressure

CHECK/ADJUST TIRE AIR PRESSURE - Continued

Table 2. - Continued

	Spare Tire Is:	**Spare Tire Is:**	**Front Tires Are:**	**Rear Tires Are:**	**Front Tires Are:**	**Rear Tires Are:**
	measured is 25% or more above standard pressure. Do not adjust pressure if above pressure shown below.	measured is 80% or less than the standard tire pressure. Do not adjust pressure if below pressure shown below.	measured is 25% or more above standard pressure. Do not adjust pressure if above pressure shown below.	measured is 25% or more above standard pressure. Do not adjust pressure if above pressure shown below.	measured is 80% or less than the standard tire pressure. Do not adjust pressure if below pressure shown below.	measured is 80% or less than the standard tire pressure. Do not adjust pressure if below pressure shown below.
Highway	109 psi (752 kPa)	70 psi (483 kPa)	109 psi (752 kPa)	100 psi (690 kPa)	70 psi (483 kPa)	64 psi (441 kPa)
Cross-Country	109 psi (752 kPa)	70 psi (483 kPa)	64 psi (441 kPa)	58 psi (400 kPa)	41 psi (283 kPa)	37 psi (255 kPa)
Mud, Sand, and Snow	109 psi (752 kPa)	70 psi (483 kPa)	40 psi (276 kPa)	36 psi (248 kPa)	26 psi (179 kPa)	23 psi (159 kPa)

WARNING

While changing tires or while performing tire maintenance, stay out of the trajectory as shown by the area indicated. Failure to comply may result in injury or death to personnel.

CHECK/ADJUST TIRE AIR PRESSURE - Continued

WARNING

Never inflate a tire without checking to ensure that the side ring is still properly seated and the lockring is properly seated in the lockring groove. Ensure that the side ring, lockring and lockring groove are not damaged. The side ring and lockring may blow off during inflation/deflation. Failure to comply may result in injury or death to personnel.

WARNING

When inflating tires mounted on the trailer, all personnel must remain out of the trajectory of the side ring and lockring as shown by the areas indicated. Failure to comply may result in injury or death to personnel.

WARNING

If the tire has been driven on when under inflated or overinflated or there is obvious or suspected damage on the tire or wheel components, the tire must be completely deflated. To deflate the tire, remove the valve core from the valve stem and stand out of the trajectory area. Failure to comply may result in injury or death to personnel.

CHECK/ADJUST TIRE AIR PRESSURE - Continued

WARNING

If tire has been run flat, or is over or under inflated when tire is measured and operating terrain is compared to Unsafe Tire Inflation Pressures, or if wheel/tire assembly has obvious or suspected damage, it is not safe to adjust tire pressure. Completely deflate tire (WP 0047) and remove tire from axle. Failure to follow these procedures may result in injury or death to personnel.

8. If tire is underinflated or overinflated or if the wheel or tire has obvious damage or suspected damage, stand out of trajectory range. Remove inflation gauge (2) from air hose (1) and press handle (9) until all air pressure has exhausted from inflation gauge. When tire is completely deflated, remove from trailer and take to Field Maintenance for disassembly and repair.

9. If tire is not underinflated or overinflated and the wheel or tire does not have obvious damage or suspected damage, stand out of trajectory range and inflate or deflate until proper pressure (Table 1) is attained. Press in latch handle (7) and pull air chuck (8) from valve stem (6). Install valve cap (5).

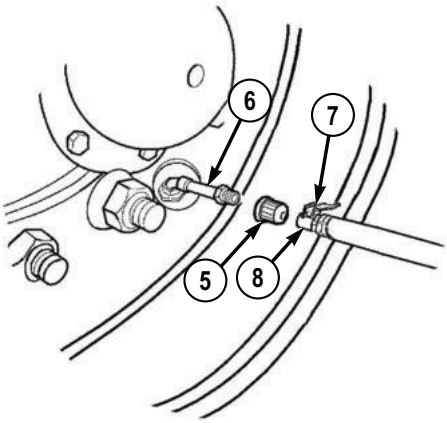

Figure 4.

10. Shut OFF engine. Refer to vehicle Operator's manual. (WP 0048)

CHECK/ADJUST TIRE AIR PRESSURE - Continued

WARNING

Hold end of air line when disconnecting from quick-disconnect coupling. Air line is under pressure and can fly out at fast rate of speed. Failure to comply may result in injury or death to personnel.

11. Remove air hose (1) from air coupler (4). Install cover (3) on air coupler.

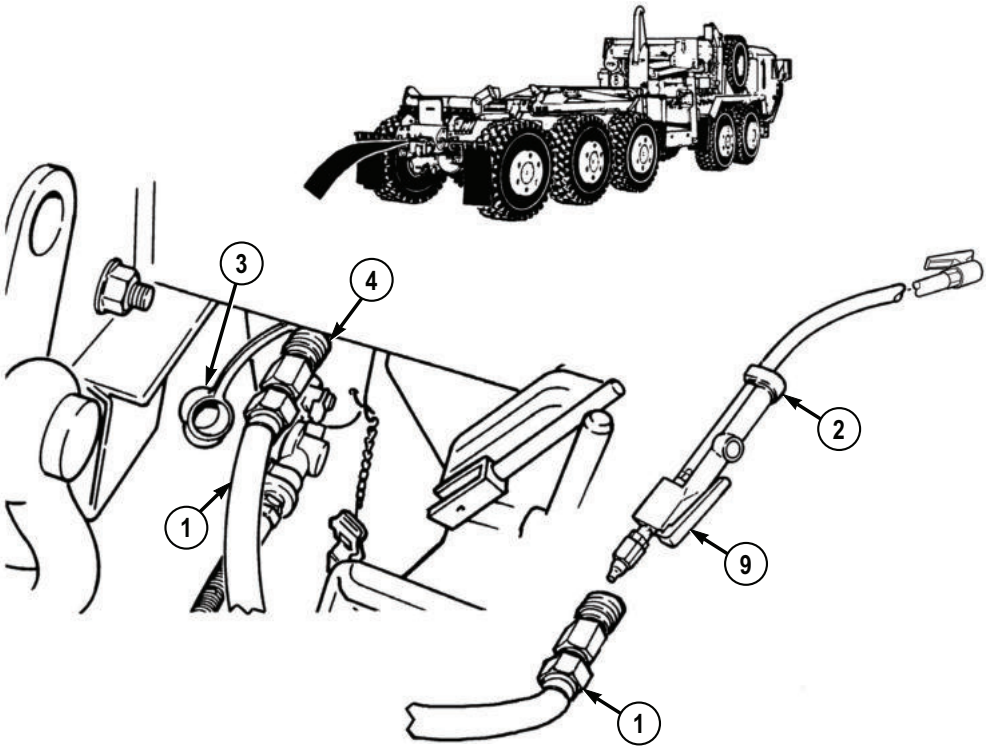

Figure 5.

12. Remove inflation gauge (2) from air hose (1). Stow air hose and inflation gauge in PLS BII stowage box.

END OF TASK

FOLLOW-ON MAINTENANCE

Remove wheel chocks. (WP 0021)

END OF WORK PACKAGE

CHAPTER 6

SUPPORTING INFORMATION

FIELD MAINTENANCE REFERENCES

SCOPE

This work package lists all the pamphlets, forms, field manuals, technical manuals, and other publications referred to in this manual. Also, those publications that should be consulted for additional information about vehicle operations are listed.

DEPARTMENT OF ARMY PAMPHLETS

The following indexes should be consulted frequently for latest changes or revisions and for new publications relating to material covered in this technical manual.

	MILITARY PUBLICATION INDEXES
DA PAM 25-30	Consolidated Index of Army Publications and Blank Forms
DA PAM 750-8	The Army Maintenance Management System (TAMMS) Users Manual
DA PAM 25-33	User's Guide for Army Publications and Forms
DA PAM 710-2-1	Using Unit Supply System (Manual Procedures)

FORMS

DA Form 2028	Recommended Changes to Publications and Blank Forms
DA Form 2404	Equipment Inspection and Maintenance Worksheet
DA Form 2407	Maintenance Request
DA Form 2408-9	Equipment Control Record
DD Form 314	Preventive Maintenance Schedule and Record
DD Form 1397	Processing and Deprocessing Record for Shipment, Storage, and Issue of Vehicles and Spare Engines
DD Form 2282	Reinspection Decal Convention For Safe Containers
SF 368	Quality Deficiency Report
DA Form 5988-E	Equipment Inspection/Maintenance Worksheet (EGA)
SF 364	Supply Discrepancy Report
DA FORM 2062	Hand Receipt/Annex Number
DD FORM 250	Material Inspection and Receiving Report
DD FORM 1149	Requisition and Invoice/Shipping Document

FORMS - Continued

DD FORM 1348-1	DOD Single Line Item Release/Receipt Document
DA FORM 2407-1	Maintenance Request Continuation Sheet
DA FORM 2402	Maintenance Tag
STANDARD FORM 4895	Equipment Preservation Data Sheet (EPDS)

FIELD MANUALS

FM 31-70	Basic Cold Weather Manual
FM 90-3	Desert Operations
FM 4-25.11	First Aid
FM 9-207	Operation and Maintenance of Ordnance Materiel in Cold Weather
FM 21-305	Manual for Wheeled Vehicle Driver
FM 4-30.31	Recovery and Battle Damage Assessment and Repair
FM 31-71	Northern Operations
FM 20-3	Camouflage, Concealment, and Decoys
FM 3-11.5	Multiservice Tactics, Techniques, and Procedures for Chemical, Biological, Radiological and Nuclear Decontamination
FM 55-30	Army Motor Transport Units and Operations
FM 3-11.3	Multiservice Tactics, Techniques, and Procedures for Chemical, Biological, Radiological and Nuclear Decontamination Avoidance
FM 3-11.4	Multiservice Tactics, Techniques, and Procedures For Nuclear, Biological, and Chemical (NBC) Protection {MCWP 3-37.2; NTTP 3-11.27; AFTTP (I) 3-2.46} (This Item is included on EM 0205)
FM 21-10	Field Hygiene and Sanitation

TECHNICAL MANUALS

TM 3-4230-214-12&P	Operator's and Unit Maintenance Manual Including Repair Parts and Special Tools List for Decontaminating Apparatus
TM 3-6665-225-12	Operator's and Organizational Maintenance Manual: for Alarm, Chemical Agent
TM 9-1005-245-13&P	Machine Gun Mount
TM 9-2330-385-14	Operator's, Unit, Direct Support and General Support Maintenance Manual for Palletized Load System Trailer (PLST) Model M1076 (NSN 2330-01-303-5197)

TECHNICAL MANUALS - Continued

TM 3-4240-280-10	Operator's Manual for Mask, Chemical-Biological: Aircraft, ABC-M24 and Accessories and Mask, Chemical-Biological, Tank, M25A1 and Accessories (Reprinted W/Basic Incl C1-2) (This item is included on EM 0045)
TM 9-3990-206-14&P	Operator's, Unit, Direct Support and General Support Maintenance Manual (Including RPSTL) for the PLS Flatrack
TM 750-244-6	Procedures for Destruction of Tank-Automotive Equipment to Prevent Enemy Use (U.S. Army Tank-Automotive Command)
TM 11-5820-498-12	Operator's and Organizational Maintenance Manual: Radio Sets
TM 9-6140-200-14	Operator's, Unit, Direct Support and General Support Maintenance Manual for Lead-Acid Storage Batteries
TM 9-4940-568-10	Operator's Manual for Forward Repair System (FRS)
TM 9-3990-260-14&P	Operator's, Unit, Direct Support and General Support Maintenance Manual (Including RPSTL) for CROP
TM 9-2320-364-10	Operator's Manual Truck, Tractor, M1074 and M1075 Palletized Load System (PLS)
TM 43-0139	Painting Instructions for Army Materiel
TM 9-2610-200-14	Operator's, Unit, Direct Support, and General Support Maintenance Manual for Care, Maintenance, Repair, and Inspection of Pneumatic Tires and Inner Tubes
TM 9-214	Inspection, Care and Maintenance of Antifriction Bearings
TM 43-0158	General Shop Practice Requirements for Repair, Maintenance, and Test of Electronic Equipment
TM 9-4910-571-12&P	Operator's and Organizational Maintenance Manual (Including Repair Parts and Special Tools List) for Simplified Test Equipment for Internal Combustion Engines (STE/ICE-R)
TM 9-2320-364-10-HR	Hand Receipt for Truck, PLS
TM 750-254	Cooling System: Tactical Vehicles
TM 9-2320-319-10-HR	Hand Receipt for Truck, PLSA1
TM 9-2320-319-10	Operator's Manual Truck, Tractor, M1074A1 and M1075A1 Palletized Load System (PLS)

MISCELLANEOUS PUBLICATIONS

TB 43-0209	Color, Marking, and Camouflage Painting of Military Vehicles
TB 9-2300-281-35	Standard for Overseas Shipment or Domestic Issue of Special Purpose Vehicles
TB 43-0142	Safety Inspection and Testing of Lifting Devices
TB 750-651	Use of Antifreeze Multi-Engine Type Cleaning Compounds and Test Kit in Engine Cooling System

MISCELLANEOUS PUBLICATIONS - Continued

TB 9-2320-364-15	Warranty Program for Palletized Load System (PLS) M1074 (NSN 2320-01-304-2277) M1075 (NSN 2320-01-304-2278) M1076 (NSN 2330-01-303-5197) M1077 (NSN 2320-01-307-7676)
AR 70-1	Army Acquisition Policy
CTA 8-100	Army Medical Department Expendable/Durable Items
CTA 50-970	Expendable/Durable Items (Except Medical, Class V, Repair Parts, and Heraldic Item)
TC 9-237	Operators' Circular for Welding Theory and Application
AR 725-50	Requisition, Receipt, and Issue System
AR 746-2	Combat Vehicle Marking System
AR 750-1	Army Material Maintenance Policy and Retail Maintenance Operations
MIL-HDBK-138	Container Inspection Handbook for Commercial and Military Intermodal Containers
SF 368	Product Quality Deficiency Report
AR 750-10	Army Modification Program
TB 9-2300-422-20	Security of Tactical Wheeled Vehicles
TM 38-470	Storage and Maintenance of Army Prepositioned Stock Materiel
TB 43-0216	Safety and Hazard Warnings for Operation and Maintenance of TACOM Equipment
AR 700-139	Army Warranty Program
AR 200-1	Environmental Protection and Enhancement
AR 385-10	The Army Safety Program

END OF WORK PACKAGE

OPERATOR MAINTENANCE
COMPONENTS OF END ITEM AND BASIC ISSUE ITEMS LISTS

INTRODUCTION

Scope

This appendix lists components of end item and basic issue items for the PLS vehicles, trailers, and flatracks to help inventory items required for safe and efficient operation.

General

The Components of End Item and Basic Issue Items Lists are divided into the following sections:

Section II. Components of End Item This listing is for informational purposes only, and is not authority for requisition replacements. These items are part of the end item, but are removed and separately packaged for transportation or shipment. As part of the end item, these items must be with the end item whenever it is issued or transferred between property accounts. Illustrations are furnished to assist in identifying the items.

Section III. Basic Issue Items These are the minimum essential items required to place the PLS vehicles, trailers, and flatracks in operation, to operate them, and to perform emergency repairs. Although shipped separately packaged, BII must be with the vehicle during operation and whenever it is transferred between property accounts. The illustrations will assist with hard-to-identify items. This manual is the authority to request/requisition replacement BII, based on TOE/MTOE authorization of the end item.

Explanation of Columns

The following provides an explanation of columns found in the tabular listings:

Column (1) - Item Number Gives you the reference number of the item listed.

Column (2) - National Stock Number (NSN) and Illustration. Identifies the stock number of the item to be used for requisitioning purposes and provides an illustration of the item.

Column (3) - Description, Part Number/(CAGEC). Identifies the Federal item name (in all capital letters) followed by a minimum description when needed. The stowage location of COEI and BII is also included in this column. The last line below the description is the part number and the Commercial and Government Entity Code (CAGEC) (in parentheses).

Column (4) - Usable On Code When applicable, gives you a code if the item you need is not the same for different models of equipment. These codes are identified below:

INTRODUCTION - Continued

Code	Used On
074	Palletized Load System With Crane
075	Palletized Load System Without Crane
076	Palletized Load System Trailer
077	Palletized Load System Flatrack
IPF	ISO Compatible Palletized Flatrack
741	Palletized Load System A1 With Crane
751	Palletized Load System A1 Without Crane

Column (5) - U/I Unit of Issue (U/I) U/I. Unit of Issue (U/I) indicates the physical measurement or count of the item as issued per the National Stock Number shown in column (2).

Column (6) - Qty. Indicates the quantity required.

COMPONENTS OF END ITEM

Table 1. Components of End Item

(1) Illus No.	(2) National Stock Number (NSN)	(3) Description, Part Number/(CAGEC)	(4) Usable On Code	(5) U/I	(6) Qty Rqr
1		NOT APPLICABLE FOR THIS MODEL	076		

Table 2. BASIC ISSUE ITEMS

(1) Illus No.	(2) National Stock Number (NSN)	(3) Description, Part Number/(CAGEC)	(4) Usable On Code	(5) U/I	(6) Qty Rqr
1	8105-01-394-5929 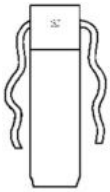	BAG, TOOL (Located in trailer passenger side stowage box) 199-1290(0B4P8)	076	EA	1
2	2540-01-165-6136 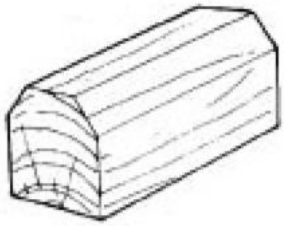	CHOCK, WHEEL (Located in trailer passenger side stowage box) 1350250(45152)	076	EA	2
3	5130-01-400-0129 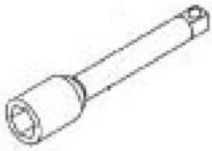	EXTENSION, WRENCH (Located in trailer passenger side stowage box) 07569 (1CV05)	076	EA	1

Table 2. BASIC ISSUE ITEMS - Continued

(1) Illus No.	(2) National Stock Number (NSN)	(3) Description, Part Number/(CAGEC)	(4) Usable On Code	(5) U/I	(6) Qty Rqr
4	4210-01-133-9053 	EXTINGUISHER, FIRE (Located in trailer passenger side stowage box) 429101 (03670)	076	EA	1
5	5340-01-209-7841 	HANDLE, EXTENSION, JACK (Located in trailer passenger side stowage box) 1347720(45152)	076	EA	1
6	4720-01-368-7981 	HOSE ASSEMBLY AIR (Located in trailer passenger side stowage box) 1876750U(45152)	076	EA	1

Table 2. BASIC ISSUE ITEMS - Continued

(1) Illus No.	(2) National Stock Number (NSN)	(3) Description, Part Number/(CAGEC)	(4) Usable On Code	(5) U/I	(6) Qty Rqr
7	5120-01-146-8096 	JACK, HYDRAULIC (Located in trailer passenger side stowage box) EBJ-12GC(26952)	076	EA	1
8	5420-00-529-4427 	LOAD BINDER, 5/8 RACHET (Located in trailer passenger side stowage box) L-140 Model R-C(75535)	076	EA	2
9	5340-00-158-3807 	PADLOCK w/CHAIN (Located in trailer passenger side stowage box) MS35647-9(96906)	076	EA	1

Table 2. BASIC ISSUE ITEMS - Continued

(1) Illus No.	(2) National Stock Number (NSN)	(3) Description, Part Number/(CAGEC)	(4) Usable On Code	(5) U/I	(6) Qty Rqr
10	5340-01-350-0872 	PLATE, MOUNTING (Located in trailer passenger side stowage box) 1731070(45152)	076	EA	1
11	5220-01-360-5582 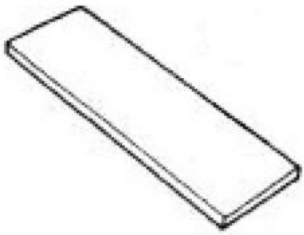	PLATE, SURFACE (Located in trailer passenger side stowage box) 1874160(45152)	076	EA	2
12	2590-01-507-7132 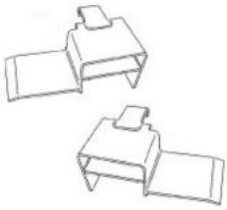	KIT, TRAILER INTERFACE (Located in trailer passenger side stowage box) 57K4591(19207)	076	EA	1

Table 2. BASIC ISSUE ITEMS - Continued

(1) Illus No.	(2) National Stock Number (NSN)	(3) Description, Part Number/(CAGEC)	(4) Usable On Code	(5) U/I	(6) Qty Rqr
13	2590-01-533-8676 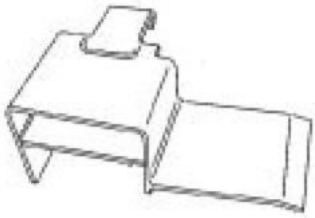	RAMP, LOADING VEHICLE, RH (Located in trailer passenger side stowage box) 3-33903(07GE7)	076	EA	1
14	2590-01-539-2857 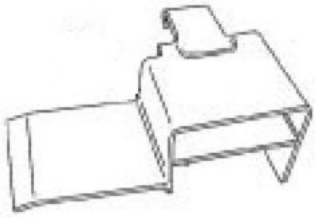	RAMP, LOADING VEHICLE, LH (Located in trailer passenger side stowage box) 2-33902(07GE7)	076	EA	2
15	5120-01-375-0215 	ROD, UNLOCKING (Located in trailer passenger side stowage box) 1873040(45152)	076	EA	2

Table 2. BASIC ISSUE ITEMS - Continued

(1) Illus No.	(2) National Stock Number (NSN)	(3) Description, Part Number/(CAGEC)	(4) Usable On Code	(5) U/I	(6) Qty Rqr
16	5315-01-371-1763 	ROD, UNLOCKING (Located in trailer passenger side stowage box) 1873040(45152)	076	EA	1
17	9330-01-371-0322 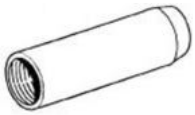	SHEATH, RUBBER (Located in trailer passenger side stowage box) 1864380(45152)	076	EA	2
18	5120-01-242-7218 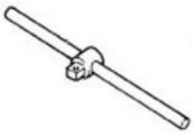	SLIDING, HANDLE (Located in trailer passenger side stowage box) 1505380(45152)	076	EA	1
19	5130-00-541-7839 	SOCKET, 1-1/2 in. (Located in trailer passenger side stowage box) DP486A(IDJ82)	076	EA	1

Table 2. BASIC ISSUE ITEMS - Continued

(1) Illus No.	(2) National Stock Number (NSN)	(3) Description, Part Number/(CAGEC)	(4) Usable On Code	(5) U/I	(6) Qty Rqr
20	3990-01-366-1607 	STRAP, TIEDOWN (Located in trailer passenger side stowage box) FDC5770-5(98313)	076	EA	1
21	5120-00-423-6728 	WRENCH, ADJUSTABLE (Located in trailer passenger side stowage box) AC115(72368)	076	EA	1

END OF WORK PACKAGE

OPERATOR MAINTENANCE
EXPENDABLE/DURABLE ITEMS LIST

Introduction

Scope

This appendix lists expendable supplies and materials that are needed to operate and maintain the PLS vehicles, trailers, and flatracks. These items are authorized by CTA 50-970. This appendix includes expendable items (except Medical, Class V, Repair Parts, and Heraldic Items) and consumable materials.

Explanation of Columns

Column (1) - Item Number This number is assigned to the entry in the list and is referenced in the narrative instructions to identify the item (e.g., Use brake fluid (WP 0098, item 5)).

Column (2) - Level This column identifies the lowest level of maintenance that requires the listed item.

- C -- Operator/Crew
- O -- Unit/AMC
- F -- Direct Support/ASB
- H -- General Support
- D -- Depot

Column (3) - National Stock Number This is the NSN assigned to the item which you can use to requisition it.

Column (4) - Description This column provides the other information you need to identify the item. The last line below the description is the part number and the Commercial and Government Entity Code (CAGEC) (in parentheses).

Column (5) - Unit of Measure (U/I) Unit of Issue (U/I) code shows the physical measurement or count of an item, such as gallon, dozen, gross, etc.

Table 1. Expendable/Durable Supplies and Materials List

(1) Item No.	(2) Level	(3) National Stock Number (NSN)	(4) Item Name, Description, Part Number/ (CAGEC)	(5) U/I
			Antifreeze	
1	O	6850-01-464-9125	Antifreeze 1-gallon can A-A-52624 58536	GL
			Antifreeze	
2	O	6850-01-441-3248	Antifreeze 55-gallon drum A-A-52624 58536	DR
			Antifreeze	
3	O	6850-00-441-3223	Antifreeze 55-gallon drum AA52624-1-A 58536	DR
			Antiseize Compound	
4	O	8030-00-155-644	Antiseize Compound 16 oz aerosol can 76759 05972	CN
5	O	8030-00-251-3980	Antiseize Compound 1-pound can 034-000750 26916	LB
			Chips, Soap P-S-579	
6	O	7930-00-634-3935	Chips, Soap P-S-579 200-pound drum ASTM D 496 81346	DR
			Cleaning Compound	
7	O	6850-01-181-0273	Cleaning Compound 1-gallon MIL-C-87936 81349	GL
8	O	6850-01-184-7453	Cleaning Compound 5-gallon can MIL-C-87936 81349	CN

Table 1. Expendable/Durable Supplies and Materials List - Continued

(1) Item No.	(2) Level	(3) National Stock Number (NSN)	(4) Item Name, Description, Part Number/ (CAGEC)	(5) U/I
9	O	6850-01-184-3182	Cleaning Compound	
			Compound, Cleaning Windshield	
10	O	6850-00-926-2275	Compound, Cleaning Windshield 16-ounce bottle 0854-000 OFTT5	BT
			Fuel	
11	O	9140-00-286-5294	Fuel Bulk AA52557-2 58536	
12	O	9140-00-286-5295	Fuel 5-gallon drum AA52557-2 58536	
13	O	9140-00-286-5296	Fuel 55-gallon drum, 16 gage AA52557-2 58536	
			Grease, Automotive and Artillery (GAA) (MIL-G-10924)	
14	O	9150-01-197-7688	Grease, Automotive and Artillery (GAA) (MIL-G-10924) 2 1/4–ounce tube M-10924–A 81349	TU
15	O	9150-01-197-7693	Grease, Automotive and Artillery (GAA) (MIL-G-10924) 14 oz cartridge M-10924-B 81349	CA
16	O	9150-01-197-7690	Grease, Automotive and Artillery (GAA) (MIL-G-10924) 1 ¾-ounce can M-10924-C 81349	CN

Table 1. Expendable/Durable Supplies and Materials List - Continued

(1) Item No.	(2) Level	(3) National Stock Number (NSN)	(4) Item Name, Description, Part Number/ (CAGEC)	(5) U/I
17	O	9150-01-197-7692	Grease, Automotive and Artillery (GAA) (MIL-G-10924) 35 lb can M-10924-E 81349	CN
18	O	9150-01-197-7691	Grease, Automotive and Artillery (GAA) (MIL-G-10924) 120 lb drum M-10924-F 81349	DR
			Oil, Fuel, Diesel, DF-1, Winter	
19	O	9140-00-286-5286	Oil, Fuel, Diesel, DF-1, Winter Bulk AA52557-1 58536	
20	O	9140-00-286-5287	Oil, Fuel, Diesel, DF-1, Winter 5-gallon drum AA52557-1 58536	
21	O	9140-00-286-5288	Oil, Fuel, Diesel, DF-1, Winter 55-gallon drum, 16 gage AA52557-1 58536	
22	O	9140-00-286-5289	Oil, Fuel, Diesel, DF-1, Winter 55-gallon drum, 18 gage AA52557-1 58536	
			Oil, Fuel, Diesel, Regular	
23	O	9140-00-286-5294	Oil, Fuel, Diesel, Regular Bulk AA52557-2 58536	
			Oil, Lubricating OEA Ice, Subzero	
24	O	9150-00-402-4478	Oil, Lubricating OEA Ice, Subzero 1-quart can MIL-L-46167 81349	CN

Table 1. Expendable/Durable Supplies and Materials List - Continued

(1) Item No.	(2) Level	(3) National Stock Number (NSN)	(4) Item Name, Description, Part Number/ (CAGEC)	(5) U/I
25	O	9150-00-402-2372	Oil, Lubricating OEA Ice, Subzero 1-gallon can MIL-L-46167 81349	CN
26	O	9150-00-491-7197	Oil, Lubricating OEA Ice, Subzero 5-gallon can MIL-L-46167 81349	CN
			Oil, Lubricating, Gear GO 75 (MIL-L-2105)	
27	O	9150-01-035-5390	Oil, Lubricating, Gear GO 75 (MIL-L-2105) 1-quart can M2105-1-75W 81349	QT
28	O	9150-01-035-5391	Oil, Lubricating, Gear GO 75 (MIL-L-2105) 5-gallon can MIL-PRF-2105 81349	CN
29	O	9150-01-035-5394	Oil, Lubricating, Gear GO 75 (MIL-L-2105) 55-gallon drum J2360 81343	CN
			Oil, Lubricating, Gear GO 75 (MIL-L-2105)	
30	O	9150-01-035-5393	Oil, Lubricating, Gear GO 75 (MIL-L-2105) 5-gallon drum M2105-3-8090 81349	CN
			Oil, Lubricating, OE/HDO 10 (MIL-L-2104)	
31	O	9150-00-189-6727	Oil, Lubricating, OE/HDO 10 (MIL-L-2104) 1-quart can M2104-1-10W 81349	QT

Table 1. Expendable/Durable Supplies and Materials List - Continued

(1) Item No.	(2) Level	(3) National Stock Number (NSN)	(4) Item Name, Description, Part Number/ (CAGEC)	(5) U/I
32	O	9150-00-177-3988	Oil, Lubricating, OE/HDO 10 12–quart can MIL-PRF-2104 81349	QT
33	O	9150-01-496-1939	Oil, Lubricating, OE/HDO 10 (MIL-L-2104) 55-gallon drum, 16 gage	
34	O	9150-00-191-2772	Oil, Lubricating, OE/HDO 10 (MIL-L-2104) 55-gallon drum, 18 gage MIL-PRF-2104 81349	DR
			Oil, Lubricating, OE/HDO 30, (SAE 30)	
35	O	9150-00-186-6681	Oil, Lubricating, OE/HDO 30, (SAE 30) 1-quart can M2104-1-30W 81349	QT
36	O	9150-00-188-9858	Oil, Lubricating, OE/HDO 30, (SAE 30) 5-gallon can MIL-PRF-2104 81349	CN
37	O	9150-00-189-6729	Oil, Lubricating, OE/HDO 30, (SAE 30) 55-gallon drum MIL-PRF-2104 81349	DR
			Oil, Lubricating, OE/HDO 40 (SAE 40) (MIL-L-2104)	
38	O	9150-00-189-6730	Oil, Lubricating, OE/HDO 40 (SAE 40) (MIL-L-2104) 1-quart can MILL2104 81349	QT
39	O	9150-00-188-9865	Oil, Lubricating, OE/HDO 40 (MIL-L-2104) 5-gallon drum MIL-L-2104 81349	CN

Table 1. Expendable/Durable Supplies and Materials List - Continued

(1) Item No.	(2) Level	(3) National Stock Number (NSN)	(4) Item Name, Description, Part Number/ (CAGEC)	(5) U/I
40	O	9150-00-188-9862	Oil, Lubricating, OE/HDO 40 (MIL-L-2104) 55-gallon drum MIL-PRF-2104 81349	DR
41	O	9150-00-405-2987	Oil, Lubricating, OE/HDO 40 (MIL-L-2104) bulk	
			Plug, Ear	
42	O	6515-00-137-6345	Plug, Ear 4-375 89875	BX
			Rag, Wiping	
43	O	7920-00-205-1711	Rag, Wiping 50 pound bale 7920-00-205-1711 64067	BE
			Cleaning Compound, Solvent	
44	O	6850-01-474-2319	Cleaning Compound, Solvent 1 gallon can MIL-PRF-680 Type II 81439	GL
45	O	6850-01-474-2317	Cleaning Compound, Solvent 5 gallon can MIL-PRF-680 Type II 81439	CO
46	O	6850-01-474-2316	Cleaning Compound, Solvent 55 gallon drum MIL-PRF-680 Type II 81439	DR
			Wire, 16 Gage	
47	O	6145-01-074-7535	Wire, 16 Gage 1927FX 45152	FT

END OF WORK PACKAGE

RECOMMENDED CHANGES TO PUBLICATIONS AND BLANK FORMS **For use of this form, see AR 310-1; the proponent agency is the US Army Adjutant General Center.**	Use Part II *(reverse)* for Repair Parts and Special Tool Lists (RPSTL) and Supply Catalogs/Supply Manuals (SC/SM).	DATE
TO: *(Forward to proponent of publication or form) (Include ZIP Code)*	**FROM:** *(Activity and location) (Include ZIP Code)*	

PART I - ALL PUBLICATIONS (EXCEPT RPSTL AND SC/SM) AND BLANK FORMS

PUBLICATION/FORM NUMBER	DATE	TITLE

ITEM NO.	PAGE NO.	PARA-GRAPH	LINE NO.*	FIGURE NO.	TABLE NO.	RECOMMENDED CHANGES AND REASON *(Exact wording of recommended change must be given)*

** Reference to line numbers within the paragraph or subparagraph.*

TYPED NAME, GRADE OR TITLE	TELEPHONE EXCHANGE/AUTOVON, PLUS EXTENSION	SIGNATURE

DA FORM 1 FEB 74 **2028** REPLACES DA FORM 2028, 1 DEC 68, WHICH WILL BE USED.

TO: *(Forward to proponent of publication or form) (Include ZIP Code)*	FROM: *(Activity and location) (Include ZIP Code)*	DATE

PART II- REPAIR PARTS AND SPECIAL TOOL LISTS AND SUPPLY CATALOGS/SUPPLY MANUALS

PUBLICATION/FORM NUMBER	DATE	TITLE

PAGE NO.	COLM NO.	LINE NO.	FEDERAL STOCK NUMBER	REFERENCE NO.	FIGURE NO.	ITEM NO.	TOTAL NO. OF MAJOR ITEMS SUPPROTED	RECOMMENDED ACTION

PART III - REMARKS *(Any general remarks or recommendations, or suggestions for improvement of publications and blank forms. Additional blank sheets may be used if more space is needed.)*

TYPED NAME, GRADE OR TITLE	TELEPHONE EXCHANGE/AUTOVON, PLUS EXTENSION	SIGNATURE

☆U.S. GOVERNMENT PRINTING OFFICE 1981 341-646/8606

RECOMMENDED CHANGES TO PUBLICATIONS AND BLANK FORMS **For use of this form, see AR 310-1; the proponent agency is the US Army Adjutant General Center.**	Use Part II *(reverse)* for Repair Parts and Special Tool Lists (RPSTL) and Supply Catalogs/Supply Manuals (SC/SM).	DATE
TO: *(Forward to proponent of publication or form) (Include ZIP Code)*	**FROM:** *(Activity and location) (Include ZIP Code)*	

PART I - ALL PUBLICATIONS (EXCEPT RPSTL AND SC/SM) AND BLANK FORMS

PUBLICATION/FORM NUMBER	DATE	TITLE

ITEM NO.	PAGE NO.	PARA-GRAPH	LINE NO.*	FIGURE NO.	TABLE NO.	RECOMMENDED CHANGES AND REASON *(Exact wording of recommended change must be given)*

** Reference to line numbers within the paragraph or subparagraph.*

TYPED NAME, GRADE OR TITLE	TELEPHONE EXCHANGE/AUTOVON, PLUS EXTENSION	SIGNATURE

DA FORM 1 FEB 74 **2028** REPLACES DA FORM 2028, 1 DEC 68, WHICH WILL BE USED.

TO: *(Forward to proponent of publication or form) (Include ZIP Code)*	FROM: *(Activity and location) (Include ZIP Code)*	DATE

PART II- REPAIR PARTS AND SPECIAL TOOL LISTS AND SUPPLY CATALOGS/SUPPLY MANUALS

PUBLICATION/FORM NUMBER	DATE	TITLE

PAGE NO.	COLM NO.	LINE NO.	FEDERAL STOCK NUMBER	REFERENCE NO.	FIGURE NO.	ITEM NO.	TOTAL NO. OF MAJOR ITEMS SUPPROTED	RECOMMENDED ACTION

PART III - REMARKS *(Any general remarks or recommendations, or suggestions for improvement of publications and blank forms. Additional blank sheets may be used if more space is needed.)*

TYPED NAME, GRADE OR TITLE	TELEPHONE EXCHANGE/AUTOVON, PLUS EXTENSION	SIGNATURE

☆U.S. GOVERNMENT PRINTING OFFICE 1981 341-646/8606

By Order of the Secretary of the Army:

GEORGE W. CASEY JR.
General, United States Army
Chief of Staff

Official:

JOYCE E. MORROW
Administrative Assistant to the
Secretary of the Army
0815503

DISTRIBUTION: To be distributed in accordance with the Initial Distribution Number: 380995, requirements for TM 9-2330-385-10.

THE METRIC SYSTEM AND EQUIVALENTS

LINEAR MEASURE
1 Centimeter = 10 Millimeters = 0.01 Meters = 0.3937 Inches
1 Meter = 100 Centimeters = 1000 Millimeters = 39.37 Inches
1 Kilometer = 1000 Meters = 0.621 Miles

WEIGHTS
1 Gram = 0.001 Kilograms = 1000 Milligrams = 0.035 Ounces
1 Kilogram = 1000 Grams = 2.2 Lb
1 Metric Ton = 1000 Kilograms = 1 Megagram = 1.1 Short Tons

LIQUID MEASURE
1 Milliliter = 0.001 Liters = 0.0338 Fluid Ounces
1 Liter = 1000 Milliliters = 33.82 Fluid Ounces

SQUARE MEASURE
1 Sq Centimeter = 100 Sq Millimeters = 0.155 Sq Inches
1 Sq Meter = 10,000 Sq Centimeters = 10.76 Sq Feet
1 Sq Kilometer = 1,000,000 Sq Meters = 0.386 Sq Miles

CUBIC MEASURE
1 Cu Centimeter = 1000 Cu Millimeters = 0.06 Cu Inches
1 Cu Meter = 1,000,000 Cu Centimeters = 35.31 Cu Feet

TEMPERATURE
5/9 (F - 32) = C
212 Fahrenheit is equivalent to 100 Celsius
90 Fahrenheit is equivalent to 32.2 Celsius
32 Fahrenheit is equivalent to 0 Celsius
9/5 C + 32 = F

APPROXIMATE CONVERSION FACTORS

TO CHANGE	TO	MULTIPLY BY
Inches	Centimeters	2.540
Feet	Meters	0.305
Yards	Meters	0.914
Miles	Kilometers	1.609
Square Inches	Square Centimeters	6.451
Square Feet	Square Meters	0.093
Square Yards	Square Meters	0.836
Square Miles	Square Kilometers	2.590
Acres	Square Hectometers	0.405
Cubic Feet	Cubic Meters	0.028
Cubic Yards	Cubic Meters	0.765
Fluid Ounces	Milliliters	29.573
Pints	Liters	0.473
Quarts	Liters	0.946
Gallons	Liters	3.785
Ounces	Grams	28.349
Pounds	Kilograms	0.454
Short Tons	Metric Tons	0.907
Pound-Feet	Newton-Meters	1.356
Pounds/Sq Inch	Kilopascals	6.895
Miles per Gallon	Kilometers per Liter	0.425
Miles per Hour	Kilometers per Hour	1.609

TO CHANGE	TO	MULTIPLY BY
Centimeters	Inches	0.394
Meters	Feet	3.280
Meters	Yards	1.094
Kilometers	Miles	0.621
Sq Centimeters	Square Inches	0.155
Square Meters	Square Feet	10.764
Square Meters	Square Yards	1.196
Square Kilometers	Square Miles	0.386
Sq Hectometers	Acres	2.471
Cubic Meters	Cubic Feet	35.315
Cubic Meters	Cubic Yards	1.308
Milliliters	Fluid Ounces	0.034
Liters	Pints	2.113
Liters	Quarts	1.057
Liters	Gallons	0.264
Grams	Ounces	0.035
Kilograms	Pounds	2.205
Metrication	Short Tons	1.102
Newton-Meters	Pound-Feet	0.738
Kilopascals	Pounds per Sq Inch	0.145
Km per Liter	Miles per Gallon	2.354
Km per Hour	Miles per Hour	0.621