ARMY TM 9-2320-366-10-2
AIR FORCE T.O. 36A12-1C-1091-2

TECHNICAL MANUAL
OPERATOR'S INSTRUCTIONS
M1083 SERIES, 5 TON, 6x6,
MEDIUM TACTICAL VEHICLES (MTV)

VOLUME NO. 2 OF 2

MODEL	NSN	EIC
TRK, CAR., MTV, M1083		
W/WN	2320-01-360-1895	BT3
W/O WN	2320-01-354-3386	BR2
TRK, CAR., MTV, W/MATL HDLG EQPT (MHE) M1084	2320-01-354-3387	BR3
TRK, CAR., MTV, LWB, M1085		
W/WN	2320-01-360-1897	BT5
W/O WN	2320-01-354-4530	BR7
TRK, CAR., MTV, LWB, W/MATL HDLG EQPT (MHE) M1086	2320-01-354-4531	BR8
TRK, TRACTOR, MTV, M1088		
W/WN	2320-01-360-1892	BTY
W/O WN	2320-01-355-4332	BTJ
TRK, WKR, MTV, M1089	2320-01-354-4528	BR4
TRK, DUMP, MTV, M1090		
W/WN	2320-01-360-1893	BTZ
W/O WN	2320-01-354-4529	BR5
TRK, CHAS, MTV, M1092	2320-01-354-3382	BRZ
TRK, CAR., MTV, AIR DROP, M1093		
W/WN	2320-01-360-1896	BT4
W/O WN	2320-01-355-3063	BR9
TRK, DUMP, MTV, AIR DROP, M1094		
W/WN	2320-01-360-1894	BT2
W/O WN	2320-01-355-3062	BTK
TRK, CHAS, MTV, LWB, M1096	2320-01-354-4527	BR6

HOW TO USE THIS MANUAL iii

AUXILIARY EQUIPMENT OPERATION 2-690

EMERGENCY PROCEDURES 2-788

TROUBLESHOOTING INSTRUCTIONS 3-2

MAINTENANCE PROCEDURES 3-87

LUBRICATION ORDER F-1

ALPHABETICAL INDEX INDEX-1

DISTRIBUTION STATEMENT A. Approved for public release; distribution is unlimited.

HEADQUARTERS, DEPARTMENTS OF THE ARMY AND THE AIR FORCE
15 SEPTEMBER 1998 CHANGE 1

WARNING SUMMARY

WARNING

CARBON MONOXIDE (EXHAUST GAS) CAN KILL YOU.

Carbon monoxide is a colorless, odorless, DEADLY POISONOUS gas and when breathed deprives body of oxygen and causes SUFFOCATION. Breathing air with carbon monoxide produces symptoms of headache, dizziness, loss of muscular control, a sleepy feeling, and coma. Permanent BRAIN DAMAGE or DEATH can result from severe exposure.

The following precautions MUST be followed to ensure personnel are safe whenever any type of personnel heater or engine is operated for any purpose. Failure to comply may result in serious injury or death to personnel.

DO NOT operate heater or engine in an enclosed area without adequate ventilation.

DO NOT drive any vehicle with inspection plates, cover plates, or engine compartment covers removed unless necessary for maintenance purposes.

NEVER sleep in a vehicle when the heater is operating or the engine is idling.

BE ALERT at all times during vehicle operation for exhaust odors and exposure symptoms. If either is present, IMMEDIATELY VENTILATE personnel compartments. Treatment of affected personnel shall be: expose to fresh air; keep warm; DO NOT PERMIT PHYSICAL EXERCISE. If necessary, give cardiopulmonary resuscitation, as described in FM 21-11, and get immediate medical attention. Failure to comply may result in serious injury or death to personnel.

THE BEST DEFENSE AGAINST CARBON MONOXIDE POISONING IS GOOD VENTILATION.

WARNING

CARBON MONOXIDE (EXHAUST GAS) CAN KILL YOU.

DO NOT operate engine in an enclosed area without adequate ventilation. NEVER sleep in a vehicle when heater is operating or the engine is idling. Failure to comply may result in serious injury or death to personnel.

WARNING SUMMARY (CONT)

WARNING

Nuclear, Biological, or Chemical (NBC) contaminated air filters must be handled and disposed of only by authorized and trained personnel. The unit commander or senior officer in charge of maintenance personnel must ensure that prescribed protective clothing (FM 3-4) is used, and prescribed safety measures and decontamination procedures (FM 3-5 and TB 700-4) are followed. The unit standard operating procedures are responsible for final disposal of contaminated air filters. Failure to comply may result in serious injury or death to personnel.

WARNING

Adhesives, solvents, and sealing compounds can burn easily, can give off harmful vapors, and are harmful to skin and clothing. Keep away from open fire and use in well-ventilated area. If adhesive, solvent, or sealing compound gets on skin or clothing, wash immediately with soap and water. Failure to comply may result in serious injury or death to personnel.

WARNING

When required to remain inside the vehicle during extreme heat, occupants should follow the water intake, work/rest cycle, and other heat stress preventive medicine measures contained in FM 31-70, Basic Cold Weather Manual. Failure to comply may result in serious injury or death to personnel.

WARNING

Do not touch extremely cold metal (below -26°F, -32°C). Bare skin may freeze to cold metal. Failure to comply may result in injury to personnel.

WARNING

Pressure in coolant reservoir must be released before removing cap. Failure to comply may result in injury to personnel.

WARNING

Never raise cab while occupied or when parked uphill on a steep grade. Failure to comply may result in serious injury or death to personnel.

WARNING

Do not allow personnel near cab while cab is being lowered. Cab doors could open. Failure to comply may result in serious injury or death to personnel.

WARNING

Cab hydraulic latch must be locked before driving vehicle. Failure to comply may result in serious injury or death to personnel or damage to equipment.

WARNING

Do not pull seat belt more than 1 in. (2.54 cm) away from shoulder and lock comfort latch. Seat belt will not be effective if accident occurs. Failure to comply may result in serious injury or death to personnel.

WARNING

Vehicle must be secure. Chock wheels when stopped on incline. Vehicle may roll. Failure to comply may result in serious injury or death to personnel or damage to equipment.

WARNING

Ensure vehicle is parked on level ground before changing flat tire. Vehicle may roll. Failure to comply may result in serious injury or death to personnel.

WARNING

Both suspension compression plates must be installed on axle studs. Failure to comply may result in serious injury or death to personnel.

WARNING

Engine compartment and accessories may be extremely hot when engine is running or has been running recently. Use caution around engine when cab is raised. Failure to comply may result in injury to personnel.

WARNING SUMMARY (CONT)

WARNING

Engine compartment contains a partially exposed fan blade. Use extreme caution around front of engine. Failure to comply may result in injury to personnel.

WARNING

Cargo cover weighs approximately 60 lbs (27 kgs). Long Wheel Base (LWB) cargo cover weighs approximately 80 lbs (36 kgs). An assistant is required to lift cargo cover. Failure to comply may result in injury to personnel or damage to equipment.

WARNING

Ensure engine oil is cool before performing any maintenance. Failure to comply may result in serious injury or death to personnel.

WARNING

Ensure safety strap is fastened across back and front of vehicle before transporting troops. Failure to comply may result in serious injury or death to personnel.

WARNING

Ensure both doors are securely closed before cab is raised/lowered. Do not allow personnel near cab when cab is being raised/lowered. Cab doors could open. Failure to comply may result in serious injury or death to personnel or damage to equipment.

WARNING

Data and instruction plates given below must be followed at all times to safely operate vehicle. Failure to comply may result in injury to personnel or damage to equipment.

WARNING

Extreme care should be taken when removing coolant fill cap if temperature gage reads above 180°F (32°C). Contact with steam or hot coolant under pressure may result. Failure to comply may result in injury to personnel.

WARNING

Tire weighs approximately 350 lbs (159 kgs). If treads of tire catch on tool box during lowering, raise tire and pull tire away from tool box and continue lowering. Use extreme care when handling tire. Failure to comply may result in injury to personnel.

WARNING

Tire weighs approximately 350 lbs (159 kgs). Use extreme care when handling tire. Failure to comply may result in injury to personnel.

WARNING

Place hydraulic jack on flat surface. Do not allow personnel under vehicle when jacking. Failure to comply may result in serious injury or death to personnel.

WARNING

Handle tire with care. Tire may have exposed broken metal cords or sharp debris in it. Failure to comply may result in injury to personnel.

WARNING

All cleaning procedures must be accomplished in well-ventilated areas. Failure to comply may result in injury to personnel or damage to equipment.

WARNING

Use caution when inflating tire. Overinflation may cause tire to blow apart. Failure to comply may result in serious injury or death to personnel or damage to equipment.

WARNING

Wheels must be chocked and service brakes applied before parking brake is re-leased. Vehicle may roll if wheels are not chocked. Failure to comply may result in serious injury or death to personnel.

WARNING SUMMARY (CONT)

WARNING

Protective gloves, clothing, and/or respiratory equipment must be worn whenever caustic, toxic, or flammable cleaning solutions are used. Failure to comply may result in injury to personnel or damage to equipment.

WARNING

A fire extinguisher must be available and ready during all cleaning operations involving solvents. Failure to comply may result in injury to personnel or damage to equipment.

WARNING

Manifold operator must stand near hydraulic manifold and observe spare tire. Guide person must stand to the right front of vehicle, well clear of spare tire. Failure to comply may result in serious injury or death to personnel.

WARNING

Cab roof weighs approximately 130 lbs (59 kgs). Use care when handling cab roof. Failure to comply may result in injury to personnel or damage to equipment.

WARNING

Vehicle must not be operated until rear panel and side panels are raised and properly secured. Failure to comply may result in serious injury or death to personnel or damage to equipment.

WARNING

Manifold operator must stand near hydraulic manifold and observe spare tire while spare tire is being lowered from cargo bed. Spare tire will gain momentum as it is being lowered. Failure to comply may result in serious injury or death to personnel.

WARNING

Dry Cleaning Solvent (P-D-680) is TOXIC and flammable. Wear protective goggles and gloves; use only in well-ventilated area; avoid contact with skin, eyes, and clothes, and do not breath vapors. Keep away from heat or flame. Never smoke when using Dry Cleaning Solvent; the flashpoint for Type I Dry Cleaning Solvent is 100 °F (38 °C) and for Type II is 138 °F (50 °C). Failure to comply may result in serious injury or death to personnel.

WARNING

If personnel become dizzy while using Dry Cleaning Solvent, immediately get fresh air and medical help. If Dry Cleaning Solvent contacts skin or clothes, flush with cold water. If Dry Cleaning Solvent contacts eyes, immediately flush eyes with water and get medical attention. Failure to comply may result in serious injury or death to personnel.

WARNING

Hydraulic fluid (MIL-H-5606A) is TOXIC. Wear protective goggles and gloves; use only in well ventilated area; avoid contact with skin, eyes, and clothes. Skin and clothing that come in contact with hydraulic fluid should be washed immediately. Saturated clothing should be removed immediately. Failure to comply may result in injury to personnel.

WARNING

Lead-acid battery gases can explode. Do not smoke, have open flames, or make sparks around a battery, especially if caps are off. Battery may give off gas which can explode. Failure to comply may result in serious injury or death to personnel.

WARNING

Do not back up vehicle without an assistant. Operator has limited vision while backing vehicle. Failure to comply may result in serious injury or death to personnel or damage to equipment.

WARNING

Diesel fuel or gasoline must never be used for cleaning. Failure to comply may result in injury to personnel or damage to equipment.

WARNING SUMMARY (CONT)

WARNING

Remove rings, bracelets, wristwatches, neck chains, and any other jewelry before working around vehicle. Jewelry may catch on equipment or may short across an electrical circuit or battery terminal. Failure to comply may result in serious injury or death to personnel.

WARNING

Do not smoke, have open flames, or make sparks near batteries when slave starting vehicle. Batteries can explode. Failure to comply may result in serious injury or death to personnel.

WARNING

Ensure master power switch on both vehicles are turned to off before connecting NATO power cable. Vehicles must not touch each other. Failure to comply may result in serious injury or death to personnel.

WARNING

Engine dipstick is located close to starter solenoid connectors which contain 24 vdc and high amperage. Use caution removing/installing engine dipstick to prevent shorting across starter solenoids when checking engine oil level. Failure to comply may result in serious injury or death to personnel or damage to equipment.

WARNING

Diesel fuel is flammable. Do not fill fuel tank with engine running, while smoking, or when near an open flame. Never overfill the tank or spill fuel. If fuel is spilled, clean it up immediately. Failure to comply may result in serious injury or death to personnel.

WARNING

Do not perform fuel/water separator checks, inspections, or draining while smoking, or when near fire or sparks. Fuel could ignite. Failure to comply may result in serious injury or death to personnel.

WARNING

Applying brakes on slick surfaces may cause vehicle to skid. Apply brake pedal very lightly. Failure to comply may result in serious injury or death to personnel.

WARNING

Operating in water and mud causes brake linings to get wet and can impair vehicle braking. Dry brakes by driving vehicle about 500 ft (153 m) while applying service brakes often. If adequate braking is not restored by drying brakes, notify Unit Maintenance. Failure to comply may result in injury to personnel or damage to equipment.

WARNING

Rear axle service brakes will not operate if REAR BRAKE AIR pressure gage reads below 65 psi (448 kPa). Rear axle braking will be provided by rear spring brakes for a limited time. Allow greater stopping distance. Discontinue vehicle operation as soon as possible. Failure to comply may result in serious injury or death to personnel.

WARNING

Front axle service brakes will not operate if FRONT BRAKE AIR pressure gage reads below 65 psi (448 kPa). Allow greater stopping distance. Discontinue vehicle operation as soon as possible. Failure to comply may result in serious injury or death to personnel.

WARNING

Notify Unit Maintenance that lugnuts need to be tightened to 415-475 lb-ft (563-644 N·m) as soon as possible. Wheel may come loose if lugnuts are not tightened to proper torque. Failure to comply may result in serious injury or death to personnel.

WARNING

Do not exceed maximum vehicle speed and grade limitations during normal operations. Do not exceed maximum approach or departure angles or ford water greater than maximum depth. Failure to comply may result in serious injury or death to personnel or damage to equipment.

WARNING SUMMARY (CONT)

WARNING

Bridges along your route may be marked with a class number. The bridge class number shows the safe capacity of the bridge. If the bridge class number on your vehicle is equal to or less than the bridge class number, the bridge will hold your vehicle. If the bridge class number on your vehicle is greater than the bridge class number; DO NOT CROSS BRIDGE. Failure to comply may result in serious injury or death to personnel or damage to equipment.

WARNING

Do not use HAND THROTTLE lever while driving vehicle. The HAND THROTTLE lever is not to be used as a cruise control. Failure to comply may result in serious injury or death to personnel or damage to equipment.

WARNING

Vehicle speed should be reduced to 5-10 mph (8-16 km/h) during blackout conditions. Failure to comply may result in serious injury or death to personnel.

WARNING

Do not press brake pedal hard three or four times in a row. Air supply will be used up and service brakes will not work until air pressure builds up again. Do not operate vehicle until FRONT and REAR BRAKE AIR pressure reaches at least 100 psi (690 kPa). Failure to comply may result in serious injury or death to personnel or damage to equipment.

WARNING

Transmission incorporates a hold feature to prohibit upshifting above selected gear during normal driving. However, during downhill operation, transmission may upshift above selected gear. On downgrades, vehicle speed may need to be restricted by using service brakes. Failure to comply may result in serious injury or death to personnel or damage to equipment.

WARNING

Avoid driving diagonally across a hill. Vehicle could roll over. Failure to comply may result in serious injury or death to personnel or damage to equipment.

WARNING

Do not straddle or drive on sides of sand mounds. Loose sand will not support vehicle on steep slopes. Avoid driving diagonally across a hill. Vehicle may roll over. Failure to comply may result in serious injury or death to personnel or damage to equipment.

WARNING

Brake pedal must be held down and personnel kept clear of vehicle path while WTEC II Transmission ECU Pushbutton Shift Selector (TEPSS) or WTEC III transmission Pushbutton Shift Selector (TPSS) is in DRIVE. Transmission will sometimes shift into third gear when in cold operation. Transmission will shift into second when engine reaches operating temperature (165° F (74°C) on WATER TEMP gage) causing the vehicle to lurch or move forward. The vehicle cannot move if SYSTEM PARK is engaged and the brake pedal is held down. Failure to comply may result in serious injury or death to personnel.

WARNING

Do not leave vehicle at any time without first returning HAND THROTTLE lever to full down position and placing transmission to Neutral. Failure to comply may result in serious injury or death to personnel.

WARNING

The engine must be shut down prior to exhaust restrictor removal. Failure to comply may result in injury to personnel.

WARNING

Do not handle exhaust restrictor or tailpipe with bare hands. Failure to comply may result in injury to personnel.

WARNING

Towing vehicle and disabled vehicle must have parking brakes applied before connecting/disconnecting towbar. Vehicle may roll into each other. Failure to comply may result in serious injury or death to personnel.

WARNING SUMMARY (CONT)

WARNING

Towbar weighs approximately 150 lbs (68 kgs) and requires two or more personnel to carry. Failure to comply may result in injury to personnel.

WARNING

Do not place hands near pintle hook when connecting/disconnecting towbar from pintle hook. Towing vehicle may move suddenly. Failure to comply may result in injury to personnel.

WARNING

Personnel must not occupy towed vehicle during towing operation. Towed vehicle may become disconnected while being towed. Failure to comply may result in serious injury or death to personnel.

WARNING

Ground guide is required to guide vehicle backing up. Failure to comply may result in injury to personnel or damage to equipment.

WARNING

Wear heavy leather-palmed work gloves when handling cable. Cables can become frayed or contain broken wires. Never let moving cable slide through hands, even when wearing gloves. Failure to comply may result in injury to personnel.

WARNING

Use care when installing exhaust pipe extension. Failure to comply may result in injury to personnel.

WARNING

Ensure no one is behind tailgate before dump body is raised. Failure to comply may result in serious injury or death to personnel.

WARNING

Set up stifflegs if load is swung around rear of vehicle. Vehicle could turn over if not supported. Failure to comply may result in serious injury or death to personnel.

WARNING

Underlift assembly must be operated with remote control if Operator is not able to keep underlift assembly and disabled vehicle in sight at all times during operation. Failure to comply may result in serious injury or death to personnel or damage to equipment.

WARNING

Stinger cam lock must be locked into first rectangular hole on stinger before underlift assembly is folded into its stowed position. Crossbar could shift suddenly. Failure to comply may result in injury to personnel.

WARNING

Goggles must be worn when using wrecker control panel. Blowing dust and debris may become airborne while engine is running. Failure to comply may result in injury to personnel.

WARNING

Ensure there are at least five wraps of cable on hoist drum at all times. Failure to comply may result in serious injury or death to personnel or damage to equipment.

WARNING

Do not exceed rated payload of vehicle. Failure to comply may result in injury to personnel or damage to equipment.

WARNING

Sandshoe weighs approximately 70 lbs (32 kgs). Use the aid of an assistant to lower/raise sandshoe. Failure to comply may result in injury to personnel or damage to equipment.

WARNING SUMMARY (CONT)

WARNING

Keep hands and feet clear of stifflegs during operation. Failure to comply may result in injury to personnel.

WARNING

Do not raise vehicle tires off ground with stifflegs. Vehicle may roll over. Failure to comply may result in serious injury or death to personnel or damage to equipment.

WARNING

Stifflegs must be positioned so that vehicle is level from side to side. Vehicle may roll over. Failure to comply may result in serious injury or death to personnel or damage to equipment.

WARNING

Slowly take out slack in cable before recovering equipment. Failure to comply may result in serious injury or death to personnel.

WARNING

Use extreme caution when disconnecting cable. Cable may spin rapidly to the left approximately 1 1/2 turns when disconnected. Failure to comply may result in serious injury or death to personnel.

WARNING

Keep all personnel clear of area when tension is on cable. Failure to comply may result in serious injury or death to personnel or damage to equipment.

WARNING

M1089 should not be operated at speeds over 15 mph (24 km/h) when towing, except on paved roads when Operator determines terrain conditions allow safe operation. The following are maximum speeds for safe operation.

WARNING

TERRAIN CONDITION	MAXIMUM SPEED
on road (level)	35 mph (56 km/h)
on road (hilly)	30 mph (48 km/h)
off road	15 mph (24 km/h)

Failure to comply may result in serious injury or death to personnel or damage to equipment.

WARNING

M1089 and disabled vehicle must have parking brakes applied before connecting/disconnecting towbar. Failure to comply may cause vehicles to roll into each other and may result in serious injury or death to personnel or damage to equipment.

WARNING

Never stand against or between tractor tires, stand between tractor and trailer, allow anyone behind trailer during movement, or allow anyone to stand on opposite side of operator during fifth wheel release. Always chock trailer tires before coupling, connect trailer brakes air supply and set trailer brakes before sliding fifth wheel. Use release tool when releasing and engaging slide latch lever. Failure to comply may result in serious injury or death to personnel.

WARNING

Use release tool with hook side up when closing slide latch release lever. Failure to comply may result in injury to personnel.

WARNING

Underlift assembly must be operated with remote control if Operator is not able to keep underlift assembly and disabled vehicle in sight at all times during operation. Failure to comply may result in serious injury or death to personnel or damage to equipment.

WARNING

Keep personnel clear of underlift assembly and disabled vehicle when raising. Disabled vehicle could fall suddenly. Failure to comply may result in serious injury or death to personnel.

WARNING SUMMARY (CONT)

WARNING

M1089 hydraulic hoses are under 3,000 lbs (13,344 N) pressure and must be handled carefully to prevent damage or personal injury. Failure to comply may result in serious injury or death to personnel.

WARNING

MODE SELECTOR SWITCH must be in NORMAL position to relieve pressure before disconnecting hydraulic hoses. Failure to comply may result in serious injury or death to personnel.

WARNING

Keep hands and feet clear of outriggers during operation. Failure to comply may result in injury to personnel.

WARNING

Keep boom clear of all electrical lines and other obstacles while operating Material Handling Crane (MHC). Failure to comply may result in serious injury or death to personnel.

WARNING

Area must be clear of personnel before operating swing or telescoping boom. Boom must be rotated and telescoped slow enough so Operator has control of load. If Operator cannot see load during operation, operate Material Handling Crane (MHC) with REMOTE CONTROL UNIT. Failure to comply may result in serious injury or death to personnel.

WARNING

Operator must keep load in sight at all times while operating Material Handling Crane (MHC). Load may unexpectedly shift. Failure to comply may result in serious injury or death to personnel.

WARNING

Do not operate Material Handling Crane (MHC) and 15K Self-Recovery Winch (SRW) at the same time. Load may unexpectedly shift. Failure to comply may result in serious injury or death to personnel.

WARNING

Do not operate Material Handling Crane (MHC) unless outriggers are set up and MHC is level from side to side. Failure to comply may result in serious injury or death to personnel.

WARNING

Material Handling Crane (MHC) must be operated with REMOTE CONTROL UNIT if Operator is not able to keep load in sight at all times during operation. Failure to comply may result in serious injury or death to personnel.

WARNING

Main panel Material Handling Crane (MHC) controls must not be used when REMOTE CONTROL UNIT is connected. MHC may move inadvertently. Failure to comply may result in serious injury or death to personnel.

WARNING

Wheels must always be chocked before operating Material Handling Crane (MHC). Vehicle may move or load may shift. Failure to comply may result in serious injury to personnel or damage to equipment.

WARNING

Goggles must be worn while operating Material Handling Crane (MHC) controls. Blowing dust and debris may become airborne while engine is running. Failure to comply may result in serious injury to personnel.

WARNING

Outriggers must be positioned so that Material Handling Crane (MHC) is level from side to side. Use of MHC when vehicle is not level can cause vehicle to roll over. Failure to comply may result in serious injury or death to personnel.

WARNING SUMMARY (CONT)

WARNING

Attach guide lines to load to keep control of load at all times. An assistant is required to attach guide lines. Failure to comply may result in serious injury or death to personnel or damage to equipment.

WARNING

Do not raise vehicle tires off ground with outriggers. Vehicle may roll over. Failure to comply may result in serious injury or death to personnel or damage to equipment.

WARNING

There must always be at least five wraps of cable on 15K Self-Recovery Winch (SRW). If load is applied with less than five wraps of cable on 15K SRW, cable may come loose on drum. Failure to comply may result in serious injury or death to personnel.

WARNING

Keep all personnel clear of area when tension is on cable. Failure to comply may result in serious injury or death to personnel.

WARNING

Ensure line pull does not exceed capacity of 15K Self-Recovery Winch (SRW). Failure to comply may result in serious injury or death to personnel.

WARNING

Cab protector is spring loaded and weighs approximately 180 lbs (82 kgs). Hold cab protector down before removing pins. Slowly allow cab protector to raise to vertical position after pins are removed. Failure to comply may result in injury to personnel.

WARNING

Cab protector is spring loaded and weighs approximately 180 lbs (82 kgs). Keep pressure on cab protector when lowering and when installing pins. Failure to comply may result in injury to personnel.

WARNING

Do not press dump TAILGATE switch while tailgate is not connected at the top. Tailgate will fall from dump body. Failure to comply may result in injury to personnel or damage to equipment.

WARNING

Ensure no one is behind tailgate before dump body is raised. Failure to comply may result in serious injury or death to personnel.

WARNING

Dump body must be supported by maintenance legs at any time that maintenance is performed with dump body up. Failure to comply may result in serious injury or death to personnel or damage to equipment.

WARNING

Assistant must stand clear when dump body is being lowered. Failure to comply may result in injury to personnel.

WARNING

Dump cover weighs approximately 60 lbs (27 kgs). An assistant is required to lift dump cover. Failure to comply may result in injury to personnel or damage to equipment.

WARNING

Position of assistant must be known at all times. Do not allow anyone to stand between tractor and trailer, behind trailer, or under trailer neck during coupling of tractor to trailer. Failure to comply may result in serious injury or death to personnel.

WARNING

Trailer wheels must be chocked before coupling/uncoupling with fifth wheel. Trailer wheels may roll if they are not chocked. Failure to comply may result in serious injury or death to personnel or damage to equipment.

WARNING SUMMARY (CONT)

WARNING

Listen for air leaks coming from the connections at the service and emergency gladhands. Failure to comply may result in serious injury or death to personnel or damage to equipment.

WARNING

Use this procedure only in the event of an emergency. Using the MANUAL OVERRIDE switch to operate the Material Handling Crane (MHC) defeats the overload shutdown circuits and allows the MHC to exceed the rated capacity. Failure to comply may result in serious injury or death to personnel or damage to equipment.

WARNING

Do not attempt to use hydraulic jack without jack adapter installed. Failure to comply may result in serious injury or death to personnel.

WARNING

Place hydraulic jack on flat surface. Do not allow personnel under vehicle when jacking. Failure to comply may result in serious injury or death to personnel.

WARNING

Extreme care should be taken when removing coolant fill cap if temperature gage reads above 180°F (82°C). Contact with steam or hot coolant under pressure may result. Failure to comply may result in injury to personnel.

WARNING

Pressure in coolant reservoir must be released before removing cap. Failure to comply may result in injury to personnel.

WARNING

Use care when removing debris from engine fan. Engine components will be hot. Failure to comply may result in injury to personnel.

WARNING

Light Material Handling Crane (LMHC) boom and winch weighs approximately 110 lbs (50 kgs). An assistant is required to remove LMHC boom and winch. Failure to comply may result in injury to personnel.

WARNING

Light Material Handling Crane (LMHC) mast weighs approximately 110 lbs (50 kgs). An assistant is required to remove mast from cargo bed pocket. Failure to comply may result in injury to personnel.

WARNING

Light Material Handling Crane (LMHC) boom and winch weighs approximately 110 lbs (50 kg). An assistant is required to install boom and winch. Failure to comply may result in injury to personnel.

WARNING

Cargo bed is approximately 5 ft (600 mm) above ground level. Use care during any Light Material Handling Crane (LMHC) operation. Failure to comply may result in serious injury or death to personnel.

WARNING

Ensure that wheels are chocked prior to setting up Light Material Handling Crane (LMHC). Failure to comply may result in injury to personnel.

WARNING

Power cable must be connected to Light Material Handling Crane (LMHC) before being connected to circuit breaker box. Failure to comply may result in serious injury or death to personnel.

WARNING

Determine required Light Material Handling Crane (LMHC) settings prior to raising boom. Failure to comply may result in injury to personnel or damage to equipment.

WARNING SUMMARY (CONT)

WARNING

Ensure there are at least two wraps of cable on hoist drum at all times. Cable could come off hoist drum while load is being lifted. Failure to comply may result in injury to personnel or damage to equipment.

WARNING

Safety ring must be installed on handle and pin installed on bracket prior to moving handle to upright position. Failure to comply will result in injury to personnel.

WARNING

Chock wheels when stopped on incline. Vehicle may roll downhill. Failure to comply may result in serious injury or death to personnel or damage to equipment.

WARNING

When operating vehicle in snowy or icy conditions, apply the brake pedal momentarily, every few miles. This will ensure that brake linings do not become encrusted with snow or ice. Failure to comply may result in injury to personnel or damage to equipment.

WARNING

Do not change tire pressure with tire chains installed. Changing tire pressure with tire chains installed could result in chain slippage. Failure to comply may result in serious injury to personnel or damage to equipment.

WARNING

DO NOT flat tow a fully loaded MTV and trailer combination. The MTV wrecker towbar can be damaged if weight capacity is exceeded. Failure to comply may result in serious injury or death to personnel or damage to equipment.

WARNING

When towing a vehicle with nonfunctional brakes, use extreme caution and reduce/adjust speed accordingly. Failure to comply may result in serious injury or death to personnel or damage to equipment.

WARNING

Vehicle Operator and all crew members must wear properly fitted and approved hearing protection devices when operating M1084 and M1085 cargo vehicles at speeds of 50 MPH (80 km/h) and above. Failure to comply may result in injury to personnel.

WARNING

Vehicle Operator and all crew members must wear properly fitted and approved hearing protection devices when operating the M1089 wrecker at speeds of 40 MPH (64 km/h) and above. Failure to comply may result in injury to personnel.

WARNING

Operators of the M1084, M1086, and M1089 Material Handling Cranes (MHC) must wear properly fitted and approved hearing protection devices during all craning operations. Failure to comply may result in injury to personnel.

WARNING

All personnel working within 12 ft (3.5 m) of an operating M1084 or M1085 cargo vehicle must wear properly fitted and approved hearing protection devices. Failure to comply may result in injury to personnel.

WARNING

All personnel working with 18 ft (5.5 m) of an operating M1089 wrecker must wear properly fitted and approved hearing protection devices. Failure to comply may result in injury to personnel.

WARNING

Personnel firing the M240/M2HB machine gun or Mark 19 grenade launcher from an FMTV vehicle during training exercises must be wearing properly fitted and approved hearing protection devices. Failure to comply may result in injury to personnel.

WARNING SUMMARY (CONT)

WARNING

All personnel within 180 ft (55 m) of weapons being fired from an FMTV vehicle during training exercises must be wearing properly fitted and approved hearing protection devices. Failure to comply may result in injury to personnel.

WARNING

When mission requires the vehicle Operator and crew to remain in a stationary FMTV vehicle with the engine running in outside temperatures above 90°F (32°C), vehicle Operator and crew must observe proper safety precautions to prevent heat stress injury. Refer to FM 21-10 Field Hygiene and Sanitation, and FM 21-11 First Aid for Soldiers for proper precautions and preventive measures. Failure to comply may result in injury to personnel.

WARNING

When mission requires the vehicle Operator and crew to operate the FMTV vehicle in outside temperatures above 90°F (32°C) with the windows closed, vehicle Operator and crew must observe proper safety precautions to prevent heat stress injury. Refer to FM 21-10 Field Hygiene and Sanitation, and FM 21-11 First Aid for Soldiers for proper precautions and preventive measures. Failure to comply may result in injury to personnel.

LIST OF EFFECTIVE PAGES

Insert latest changed pages. Destroy superseded pages.

NOTE: New or changed material is indicated by a vertical bar in the outer margin of the page.

Dates of issue for original and changed pages are:

Original ..... 0 ..... 15 September 1998
Change..... 1 ..... 31 May 2001

THE TOTAL NUMBER OF PAGES IN THIS PUBLICATION IS 852, CONSISTING OF THE FOLLOWING:

Page No.	*Change No.	Page No.	*Change No.	Page No.	*Change No.
Cover	1	2-541 thru 2-544	0	2-642.1 Added	1
Blank	0	2-545	1	2-642.2 Blank Added	1
a thru v	1	2-546 and 2-547	0	2-643	1
w and x Added	1	2-548	1	2-644 thru 2-649	0
A and B Added	1	2-549 thru 2-552	0	2-650 and 2-651	1
i thru v	1	2-553 and 2-554	1	2-652 and 2-653	0
vi Blank	0	2-555 thru 2-559	0	2-654 and 2-655	1
2-433 and 2-434	1	2-560	1	2-656 thru 2-659	0
2-435 thru 2-449	0	2-561 and 2-562	0	2-660	1
2-450	1	2-563	1	2-661 thru 2-676	0
2-451	0	2-564 thru 2-567	0	2-677	1
2-452 and 2-453	1	2-568	1	2-678 thru 2-686	0
2-454 thru 2-462	0	2-569	0	2-687	1
2-463	1	2-570	1	2-688 thru 2-693	0
2-464 thru 2-466	0	2-571 thru 2-574	0	2-694 thru 2-696	1
2-467 and 2-468	1	2-575	1	2-697 thru 2-700	0
2-468.1 Added	1	2-576 and 2-577	0	2-700.1 Added	1
2-468.2 Blank Added	1	2-578	1	2-700.2 Blank Added	1
2-469 thru 2-485	0	2-579 thru 2-582	0	2-701 thru 2-717	0
2-486 thru 2-490	1	2-583 and 2-584	1	2-718	1
2-491 and 2-492	0	2-585 thru 2-594	0	2-719	0
2-493	1	2-595	1	2-720	1
2-494 thru 2-498	0	2-596 and 2-597	0	2-721 and 2-722	0
2-499	1	2-598	1	2-723	1
2-500 and 2-501	0	2-599 thru 2-605	0	2-724 thru 2-736	0
2-502	1	2-606 and 2-607	1	2-737 and 2-738	1
2-503 thru 2-506	0	2-608 thru 2-611	0	2-738.1 Added	1
2-507	1	2-612 and 2-613	1	2-738.2 Blank Added	1
2-508	0	2-614 and 2-615	0	2-739 and 2-740	1
2-509	1	2-616 and 2-617	1	2-741 thru 2-747	0
2-510 thru 2-514	0	2-618	0	2-748	1
2-515	1	2-619	1	2-748.1 Added	1
2-516 and 2-517	0	2-620 and 2-621	0	2-748.2 Blank Added	1
2-518	1	2-622 thru 2-624	1	2-749 and 2-750	1
2-519 thru 2-523	0	2-624.1 Added	1	2-751 and 2-752	0
2-524 and 2-525	1	2-624.2 Blank Added	1	2-753	1
2-526 thru 2-529	0	2-625 thru 2-630	0	2-754 Blank	1
2-530	1	2-631	1	2-755 thru 2-758 Deleted	1
2-531 and 2-532	0	2-632 and 2-633	0	2-759	1
2-533	1	2-634	1	2-760 thru 2-776	0
2-534 thru 2-538	0	2-635 thru 2-641	0	2-777	1
2-539 and 2-540	1	2-642	1	2-778 Blank	1

* Zero in this column indicates an original page.

LIST OF EFFECTIVE PAGES (CONT)

Insert latest changed pages. Destroy superseded pages.

Page No.	*Change No.
2-779 thru 2-786 Deleted	1
2-787 Blank	1
2-788 thru 2-793	1
2-794 thru 2-803	0
2-804	1
2-805 thru 2-817	0
2-818 thru 2-821	1
2-822 Blank	1
2-823 thru 2-848 Deleted	1
2-849	1
2-850	0
2-851	1
2-852 thru 2-860	0
2-861	1
2-862 thru 2-873	0
2-874	1
2-875 thru 2-881	0
2-882	1
2-883	0
2-884 thru 2-886	1
2-887 thru 2-894	0
3-1 thru 3-84	1
3-84.1 thru 3-84.20 Added	1
3-85 and 3-86	1
3-87 and 3-88	0
3-89 thru 3-92	1
3-93 thru 3-95	0
3-96 thru 3-100	1
3-101	0
3-102	1
3-103 thru 3-105	0
3-106	1
3-107 thru 3-118	0
3-119 thru 3-122	1
3-123	0
3-124 thru 3-128	1
3-128.1 thru 3-128.6 Added	1
3-129 and 3-130	0
3-131 and 3-132	1
3-132.1 thru 3-132.3 Added	1
3-132.4 Blank Added	1
3-133 thru 3-140	1
3-141	0
3-142 thru 3-144	1
3-144.1 and 3-144.2 Added	1
3-145 and 3-146	1
3-146.1 thru 3-146.6 Added	1
3-147 thru 3-163	1
3-164	0
3-165 thru 3-167	1
3-168 thru 3-171	0
3-172	1
3-173 thru 3-181	0
3-182	1
3-183 thru 3-186	0
3-187 thru 3-189	1
3-190 thru 3-192	0
3-193	1
3-194	0
3-195 and 3-196	1
3-197 and 3-198	0
3-199 and 3-200	1
3-201	0
3-202	1
3-203	0
3-204	1
3-205	0
3-206	1
3-207	0
3-208	1
3-209 thru 2-228	0
3-229 thru 3-231 Added	1
3-232 Blank Added	1
A-1 and A-2	0
A-3	1
A-4 Blank	0
B-1 and B-2	0
B-3 thru B-25	1
B-26 Blank	1
B-27 and B-28 Deleted	1
C-1	0
C-2 thru C-4	1
D-1	0
D-2 thru D-4	1
E-1	0
E-2	1
E-3 thru E-6	0
E-7	1
E-8 thru E-10	0
F-1	0
F-2 thru F-4	1
F-5 and F-6	0
F-7	1
F-8 thru F-11	0
F-12 and F-13	1
F-14 and F-15	0
F-16	1
INDEX-1 thru INDEX-44	1
INDEX-45 and INDEX-46 Deleted	1

* Zero in this column indicates an original page.

ARMY TM 9-2320-366-10-2
AIR FORCE T.O. 36A12-1C-1091-2

CHANGE NO. 1

HEADQUARTERS
DEPARTMENTS OF THE ARMY
AND THE AIR FORCE

Washington, D.C., 31 May 2001

OPERATOR'S INSTRUCTIONS MANUAL
M1083 SERIES, 5-TON, 6x6,
MEDIUM TACTICAL VEHICLE (MTV)

TM 9-2320-366-10-2, 15 September 1998, is changed as follows:

1. Remove old pages and insert new pages as indicated below.
2. New or changed material is indicated by a vertical bar in the outer margin of the page.
3. Added or revised illustrations are indicated by a vertical bar adjacent to the illustration.

Remove Pages	Insert Pages	Remove Pages	Insert Pages
a thru u(/v Blank)	a thru v	2-641 and 2-642	2-641 and 2-642
none	w and x	none	2-642.1/(2-642.2 Blank)
none	A and B	2-643 and 2-644	2-643 and 2-644
i thru v/(vi Blank)	i thru v/(vi Blank)	2-649 thru 2-656	2-649 thru 2-656
2-433 and 2-434	2-433 and 2-434	2-659 and 2-660	2-659 and 2-660
2-449 thru 2-454	2-449 thru 2-454	2-677 and 2-678	2-677 and 2-678
2-463 and 2-464	2-463 and 2-464	2-687 and 2-688	2-687 and 2-688
2-467 and 2-468	2-467 and 2-468	2-693 thru 2-696	2-693 thru 2-696
none	2-468.1/(2-468.2 Blank)	none	2-700.1/(2-700.2 Blank
2-485 thru 2-490	2-485 thru 2-490	2-717 thru 2-720	2-717 thru 2-720
2-493 and 2-494	2-493 and 2-494	2-723 and 2-724	2-723 and 2-724
2-499 thru 2-502	2-499 thru 2-502	2-737 and 2-738	2-737 and 2-738
2-507 thru 2-510	2-507 thru 2-510	none	2-738.1/(2-738.2 Blank)
2-515 thru 2-518	2-515 thru 2-518	2-739 and 2-740	2-739 and 2-740
2-523 thru 2-526	2-523 thru 2-526	2-747 and 2-748	2-747 and 2-748
2-529 and 2-530	2-529 and 2-530	none	2-748.1/(2-748.2 Blank)
2-533 and 2-534	2-533 and 2-534	2-749 and 2-750	2-749 and 2-750
2-539 and 2-540	2-539 and 2-540	2-753 and 2-754	2-753/(2-754 Blank)
2-545 thru 2-548	2-545 thru 2-548	2-755 thru 2-758	none
2-553 and 2-554	2-553 and 2-554	2-759 and 2-760	2-759 and 2-760
2-559 and 2-560	2-559 and 2-560	2-777 and 2-778	2-777/(2-778 Blank)
2-563 and 2-564	2-563 and 2-564	2-779 thru 2-786	none
2-567 thru 2-570	2-567 thru 2-570	2-787 and 2-788	(2-787 Blank)/2-788
2-575 thru 2-578	2-575 thru 2-578	2-789 thru 2-794	2-789 thru 2-794
2-583 and 2-584	2-583 and 2-584	2-803 and 2-804	2-803 and 2-804
2-595 thru 2-598	2-595 thru 2-598	2-817 thru 2-820	2-817 thru 2-820
2-605 thru 2-608	2-605 thru 2-608	2-821 and 2-822	2-821/(2-822 Blank)
2-611 thru 2-624	2-611 thru 2-624	2-823 thru 2-848	none
none	2-624.1/(2-624.2 Blank)	2-849 thru 2-852	2-849 thru 2-852
2-631 thru 2-634	2-631 thru 2-634	2-861 and 2-862	2-861 and 2-862

Place this change sheet in the front of the publication for reference purposes.

Remove Pages	Insert Pages	Remove Pages	Insert Pages
2-873 and 2-874	2-873 and 2-874		
2-881 thru 2-886	2-881 thru 2-886		
3-1 thru 3-84	3-1 thru 3-84		
none	3-84.1 thru 3-84.20		
3-85 and 3-86	3-85 and 2-86		
3-89 thru 3-92	3-89 thru 3-92		
3-95 thru 3-102	3-95 thru 3-102		
3-105 and 3-106	3-105 and 3-106		
3-119 thru 3-128	3-119 thru 3-128		
none	3-128.1 thru 3-128.6		
3-131 and 3-132	3-131 and 3-132		
none	3-132.1 thru 3-132.3/ (3-132.4 Blank)		
3-133 thru 3-144	3-133 thru 3-144		
none	3-144.1 and 3-144.2		
3-145 and 3-146	3-145 and 3-146		
none	3-146.1 thru 3-146.6		
3-147 thru 3-168	3-147 thru 3-168		
3-171 and 3-172	3-171 and 3-172		
3-181 and 3-182	3-181 and 3-182		
3-187 thru 3-190	3-187 thru 3-190		
3-193 thru 3-196	3-193 thru 3-196		
3-199 thru 3-208	3-199 thru 3-208		
none	3-229 thru 3-231/ (3-232 Blank)		
A-3/(A-4 Blank)	A-3/(A-4 Blank)		
B-3 thru B-24	B-3 thru B-25/ (B-26 Blank)		
B-27 and B-28	none		
C-1 thru C-3/(C-4 Blank)	C-1 thru C-4		
D-1 thru D-4	D-1 thru D-4		
E-1 and E-2	E-1 and E-2		
E-7 and E-8	E-7 and E-8		
F-1 thru F-4	F-1 thru F-4		
F-7 and F-8	F-7 and F-8		
F-11 thru F-16	F-11 thru F-16		
INDEX-1 thru INDEX-44	INDEX-1 thru INDEX-44		
INDEX-45/(INDEX-46 Blank)	none		
DA Form 2028-2 Sample	none		
DA Form 2028-2	none		
DA Form 2028-2	none		
DA Form 2028-2	none		
Metric Conversion Chart	Metric Conversion Chart		
Front Cover	Front Cover		

Place this change sheet in the front of the publication for reference purposes.

By Order of the Secretary of the Army:

ERIC K. SHINSEKI
General, United Stales Army
Chief of Staff

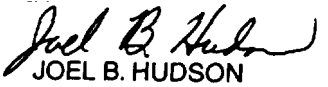

JOEL B. HUDSON
Administrative Assistant to the
Secretary *of* **the Army**
0034209

DISTRIBUTION: To be distributed in accordance with the initial distribution number (IDN) 380938, requirements for TM 9-2320-366-10-2.

TECHNICAL MANUAL
NO. 9-2320-366-10-2

TECHNICAL ORDER
NO. 36A12-1C-1091-2

HEADQUARTERS
DEPARTMENTS OF THE ARMY
AND THE AIR FORCE

Washington, D.C., 15 September 1998

Operator's Instructions Manual
M1083 SERIES, 5-TON, 6x6,
MEDIUM TACTICAL VEHICLES (MTV)
VOLUME NO. 2 OF 2

MODEL	NSN	EIC
TRK, CAR., MTV, M1083		
W/WN	2320-01-360-1895	BT3
W/O WN	2320-01-354-3386	BR2
TRK, CAR., MTV, W/MATL HDLG EQPT (MHE) M1084	2320-01-354-3387	BR3
TRK, CAR., MTV, LWB, M1085		
W/WN	2320-01-360-1897	BT5
W/O WN	2320-01-354-4530	BR7
TRK, CAR., MTV, LWB, W/MATL HDLG EQPT (MHE) M1086	2320-01-354-4531	BR8
TRK, TRACTOR, MTV, M1088		
W/WN	2320-01-360-1892	BTY
W/O WN	2320-01-355-4332	BTJ
TRK, WKR, MTV, M1089	2320-01-354-4528	BR4
TRK, DUMP, MTV, M1090		
W/WN	2320-01-360-1893	BTZ
W/O WN	2320-01-354-4529	BR5
TRK, CHAS, MTV, M1092	2320-01-354-3382	BRZ
TRK, CAR., MTV, AIR DROP, M1093		
W/WN	2320-01-360-1896	BT4
W/O WN	2320-01-355-3063	BR9
TRK, DUMP, MTV, AIR DROP, M1094		
W/WN	2320-01-360-1894	BT2
W/O WN	2320-01-355-3062	BTK
TRK, CHAS, MTV, LWB, M1096	2320-01-354-4527	BR6

REPORTING ERRORS AND RECOMMENDING IMPROVEMENTS

You can help improve this publication. If you find any mistakes or if you know of a way to improve the procedures, please let us know. Submit your DA Form 2028 (Recommended Changes to Equipment Technical Publications), through the Internet, on the Army Electronic Product Support (AEPS) website. The Internet address is http://aeps.ria.army.mil. If you need a password, scroll down and click on "ACCESS REQUEST FORM". The DA Form 2028 is located in the ONLINE FORMS PROCESSING section of the AEPS. Fill out the form and click on SUBMIT. Using this form on the AEPS will enable us to respond quicker to your comments and better manage the DA Form 2028 program. You may also mail, fax or Email your letter or DA Form 2028 direct to: AMSTA-LC-CI/TECH PUBS, TACOM-RI, 1 Rock Island Arsenal, Rock Island, IL 61299-7630. The email address is TACOM-TECH-PUBS@ria.army.mil. The fax number is DSN 793-0726 or Commercial (309) 782-0726.

DISTRIBUTION STATEMENT A. Approved for public release; distribution is unlimited.

TABLE OF CONTENTS

Page

HOW TO USE THIS MANUAL iii

Section IV. Operation Under Unusual Conditions 2-720

CHAPTER 3. MAINTENANCE INSTRUCTIONS 3-1

Section I. Lubrication Instructions 3-1

Section II. Troubleshooting Procedures 3-2

Section III. Maintenance Procedures 3-87

APPENDIX A. REFERENCES A-1

APPENDIX B. COMPONENTS OF END ITEM (COEI) AND BASIC ISSUE ITEMS (BII) LISTS B-1

APPENDIX C. ADDITIONAL AUTHORIZATION LIST (AAL) C-1

APPENDIX D. EXPENDABLE AND DURABLE ITEMS LIST D-1

APPENDIX E. STOWAGE LOCATION/DECAL/STENCIL GUIDE E-1

APPENDIX F. LUBRICATION ORDER F-1

ALPHABETICAL (SUBJECT) INDEX INDEX-1

LIST OF ILLUSTRATIONS

Figure	Title	Page
2-33	Area Definition Chart	2-661

LIST OF TABLES

Number	Title	Page
2-20	30K Winch Pull Capacity	2-442
2-21	Load Chart	2-662
2-22	Wrecker Material Handling Crane (MHC) Range Diagram Summary	2-664
2-23	Wrecker Material Handling Crane (MHC) Range Diagram Summary	2-681
2-24	15K Self-Recovery Winch (SRW) Capacity	2-770
2-25	Deleted	
3-1	Malfunction Index	3-2
3-2	Troubleshooting	3-18
3-3	Cold Tire Inflation Pressures and Restrictions for M1083, M1084, M1085, M1086, M1090, M1092, M1093, M1094, and M1096 Models	3-103
3-4	Cold Tire Inflation Pressures and Restrictions for M1088 and M1089 Models	3-104
3-5	General Cleaning Instructions	3-112

HOW TO USE THIS MANUAL

OVERVIEW

This Technical Manual (TM) is provided to help you operate and maintain the Medium Tactical Vehicles (MTV). This volume, volume 2, contains the remainder of chapter 2, lubrication, troubleshooting, and maintenance procedures. Volume 2 is divided into the following major sections in order of appearance:

- **WARNING SUMMARY.** Provides a summary of the most important warnings that apply throughout the manual. Read all warnings and cautions before performing any operation, troubleshooting or maintenance procedures.

- **TABLE OF CONTENTS.** Lists the chapters, sections, appendixes, and alphabetical index with page number in order of appearance.

HOW TO USE THIS MANUAL (CONT)

OVERVIEW (CONT)

- **CHAPTER 2, OPERATING INSTRUCTIONS (PARAGRAPH 2-41 THROUGH 2-80).** Describes the remaining operating instructions.

- **CHAPTER 3, MAINTENANCE INSTRUCTIONS.** Provides instructions for lubrication, troubleshooting, and operator maintenance.

- **APPENDIX A, REFERENCES.** Lists publications used with the MTV and reference publications which contain information regarding equipment.

- **APPENDIX B, COMPONENTS OF END ITEM (COEI) AND BASIC ISSUE ITEMS (BII) LISTS.** Lists and illustrates COEI and BII items issued with the MTV.

- **APPENDIX C, ADDITIONAL AUTHORIZATION LIST (AAL).** Lists additional items you are authorized for support of the MTV.

- **APPENDIX D, EXPENDABLE AND DURABLE ITEMS LIST.** Lists expendable and durable items used in the performance of maintenance.

- **APPENDIX E, STOWAGE LOCATION/DECAL/STENCIL GUIDE.** Shows the location of signs and details the location of COEI, BII, and AAL items.

- **APPENDIX F, LUBRICATION ORDER.** Gives operator lubrication instructions and the time interval at which lubrication is conducted. Lubrication points are also illustrated.

- **SUBJECT INDEX.** Lists important subjects contained in Volume 2 in alphabetical order and gives the paragraph number where they are located.

FINDING INFORMATION

There are several ways to find the information you need in this manual. They are as follows:

- **TABLE OF CONTENTS.** Lists chapters, sections, appendixes, and indexes with page numbers in order of appearance.

- **CHAPTER INDEXES.** List paragraphs contained in the individual chapters with paragraph and page numbers in order of appearance.

- **MALFUNCTION INDEX.** Lists malfunctions contained in the troubleshooting table with page numbers in order of appearance.

- **ALPHABETICAL (SUBJECT) INDEX.** Lists all important topics with page numbers in alphabetical order.

TROUBLESHOOTING

Troubleshooting is contained in Volume 2, Chapter 3. When you have a problem with the operation of your equipment, look at Table 3-1, Malfunction Index on page 3-2. Find the malfunction in the index. Turn to the page number listed for the malfunction in Table 3-2, Troubleshooting. Perform the steps required to correct the malfunction. If you can not find the malfunction, or the malfunction is not corrected, notify Unit Maintenance.

OPERATION AND MAINTENANCE

- **OPERATION.** Before you operate the MTV, familiarize yourself with the controls and indicators (Chapter 2, Section I). Perform your BEFORE preventive maintenance (Chapter 2, Section II). Read the operating instructions contained in Chapter 2, Sections III and IV. Always follow the WARNINGS and CAUTIONS. During operation, perform your DURING preventive maintenance, and after operation perform your AFTER preventive maintenance (Chapter 2, Section II).

- **MAINTENANCE.** When you perform maintenance, look over the entire procedure before starting. Make sure you have the necessary tools and materials at hand. Always observe WARNINGS and CAUTIONS.

CHAPTER 2
OPERATING INSTRUCTIONS (CONT)

2-41. STIFFLEGS OPERATION (M1089) 2-435
2-42. 30K WINCH OPERATION 2-442
2-43. WRECKER FLAT TOWING 2-467
2-44. M1089 UNDERLIFT ASSEMBLY OPERATION 2-483
2-45. M998 SERIES TOWING CONNECTION/DISCONNECTION 2-493
2-46. M1008 SERIES TOWING CONNECTION/DISCONNECTION 2-525
2-47. M35 SERIES TOWING CONNECTION/DISCONNECTION 2-553
2-48. M939/M939A1 AND M809 SERIES TOWING CONNECTION/DISCONNECTION 2-584
2-49. M1078 AND M1083 SERIES TOWING CONNECTION/DISCONNECTION 2-623
2-50. WRECKER MATERIAL HANDLING CRANE (MHC) OPERATION 2-661
2-51. AUXILIARY EQUIPMENT OPERATION 2-690
2-52. BACK-UP HYDRAULIC PUMP OPERATION 2-694
2-53. DATA AND INSTRUCTION PLATES 2-696

Section IV. OPERATION UNDER UNUSUAL CONDITIONS 2-720
2-54. OPERATION IN EXTREME HEAT 2-720
2-55. OPERATION IN EXTREME DUST 2-723
2-56. OPERATION IN FOREST OR ON ROCKY TERRAIN 2-725
2-57. OPERATION IN SAND OR MUD 2-726
2-58. OPERATION IN DESERT ENVIRONMENT 2-729
2-59. FIRE EXTINGUISHER OPERATION 2-729
2-60. HIGHWAY EMERGENCY MARKER KIT SETUP 2-732
2-61. TOWBAR CONNECTION/DISCONNECTION 2-737
2-62. TOWING DISABLED VEHICLE 2-749
2-63. DELETED
2-64. DELETED
2-65. 15K SELF-RECOVERY WINCH (SRW) OPERATION 2-759
2-66. DELETED
2-67. EMERGENCY PROCEDURES 2-788
2-68. PREPARATION FOR SHIPMENT 2-803
2-69. PREPARATION FOR INTERNAL AIR TRANSPORT 2-804
2-70. RAPID ENGINE WARM-UP 2-818
2-71. PREPARATION FOR MACHINE GUN OPERATION 2-849
2-72. HYDRAULIC SYSTEM OPERATION (M1089 TO M1089) 2-852
2-73. M1089 EXTERNAL HYDRAULIC POWER OPERATION 2-861
2-74. AMBER WARNING LIGHT KIT INSTALLATION/REMOVAL 2-865
2-75. STARTING ON HILL OPERATION 2-874
2-76. TIRE CHAINS INSTALLATION/REMOVAL 2-874
2-77. SNATCH BLOCK INSTALLATION/REMOVAL 2-882
2-78. VEHICLE OPERATION IN COLD ENVIRONMENT (32°F, 0°C TO -25°F, -32°C) 2-884

2-79. DELETED
2-80. M1088 TRACTOR PREPARATION FOR AIR OR SHIP TRANSPORT 2-887

Section III. OPERATION UNDER USUAL CONDITIONS (CONT)

2-41. STIFFLEGS OPERATION (M1089)

a. Prepare Wrecker to Operate Stifflegs.

CAUTION

Ensure that hydraulic shutoff valve and return valve are open before operating hydraulic equipment. Failure to comply may result in damage to equipment.

NOTE

Stifflegs are used to stabilize vehicle when M1089 30K winches or Material Handling Crane (MHC) are operated.

(1) Chock wheels (para 2-27h).

(2) Start engine (para 2-27a or b).

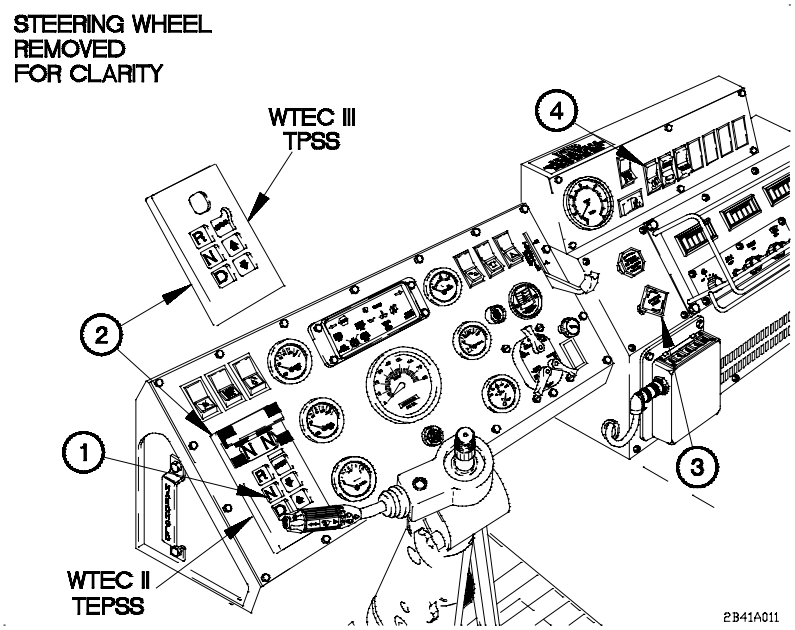

(3) Press N (Neutral) button (1) on WTEC II TEPSS (2) or WTEC III TPSS (2).

(4) Pull out SYSTEM PARK control (3).

(5) Position PTO switch (4) to on.

2-41. STIFFLEGS OPERATION (M1089) (CONT)

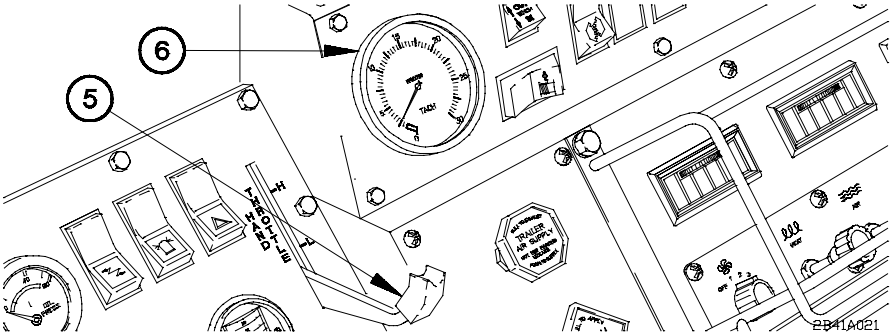

CAUTION

Keep tachometer within 1,250-1,450 rpm when Power Take-Off (PTO) is engaged. Failure to comply may result in damage to equipment.

NOTE

In the event of a tachometer failure a HAND THROTTLE lever positioned to L is approximately 1,250-1,450 rpm.

(6) Set engine speed by increasing HAND THROTTLE lever (5) until tachometer (6) reads 1,250-1,450 rpm.

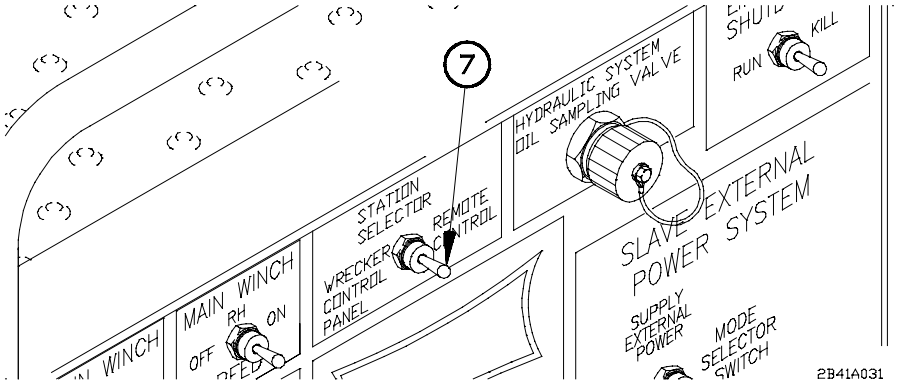

WARNING

Goggles must be worn when using wrecker control panel. Blowing dust may become airborne while engine is running. Failure to comply may result in injury to personnel.

(7) Position STATION SELECTOR switch (7) to WRECKER CONTROL PANEL.

b. Lowering Stifflegs.

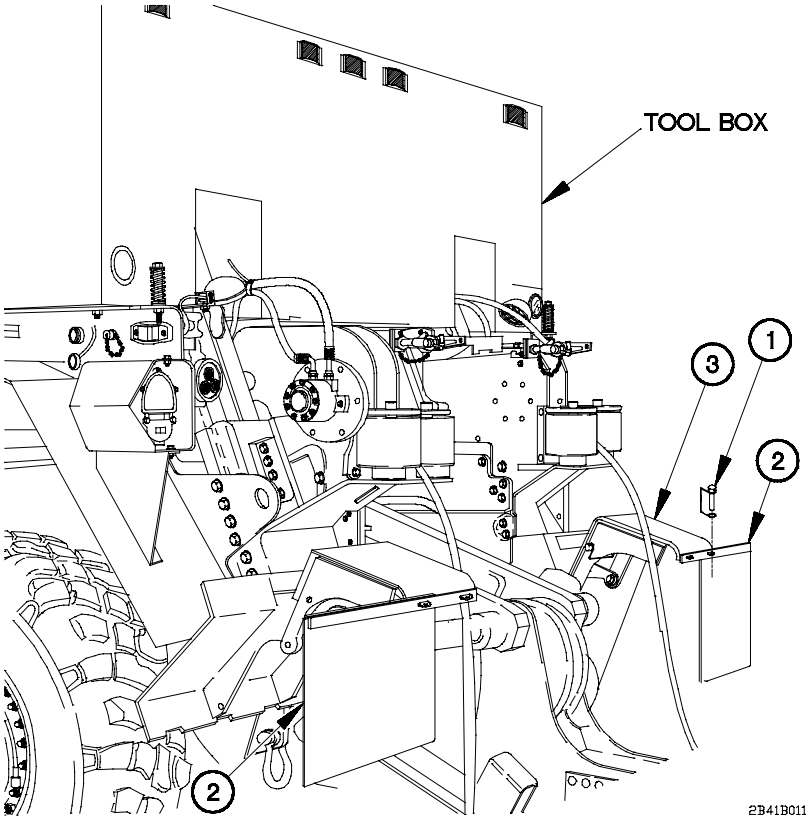

CAUTION

Mudflaps must be removed from brackets before stifflegs are lowered. Failure to comply may result in damage to equipment.

NOTE

- Stifflegs are equipped with sandshoes used during operations on paved surfaces and sand. When operating on off-road terrain, sandshoes are folded up and blade portion of stiffleg anchors wrecker.

- Perform steps (1) through (4) to lower sandshoes.

(1) Remove two lock pins (1) and mudflap (2) from sandshoe (3).

(2) Stow two lock pins (1) and mudflap (2) in tool box.

2-41. STIFFLEGS OPERATION (M1089) (CONT)

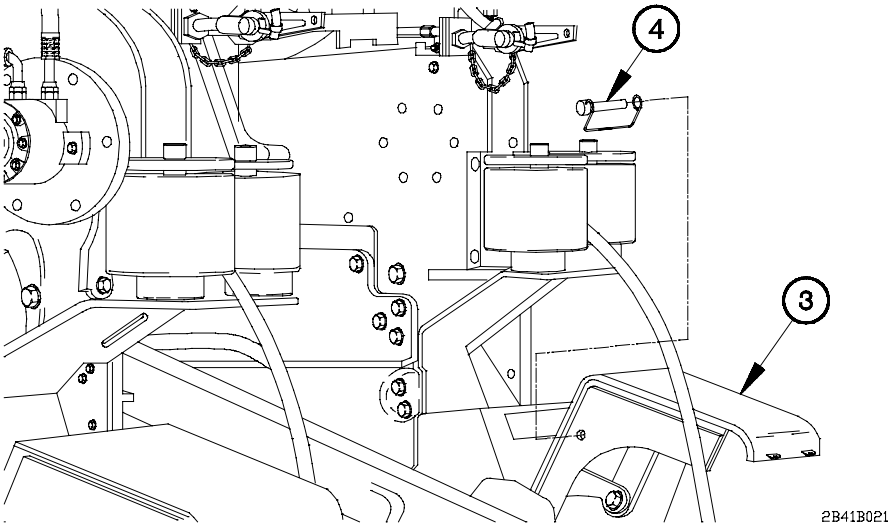

WARNING

Sandshoe weighs approximately 70 lbs (32 kgs). Use the aid of an assistant to lower/raise sandshoe. Failure to comply may result in injury to personnel or damage to equipment.

(3) Remove two lock pins (4) and lower sandshoe (3).

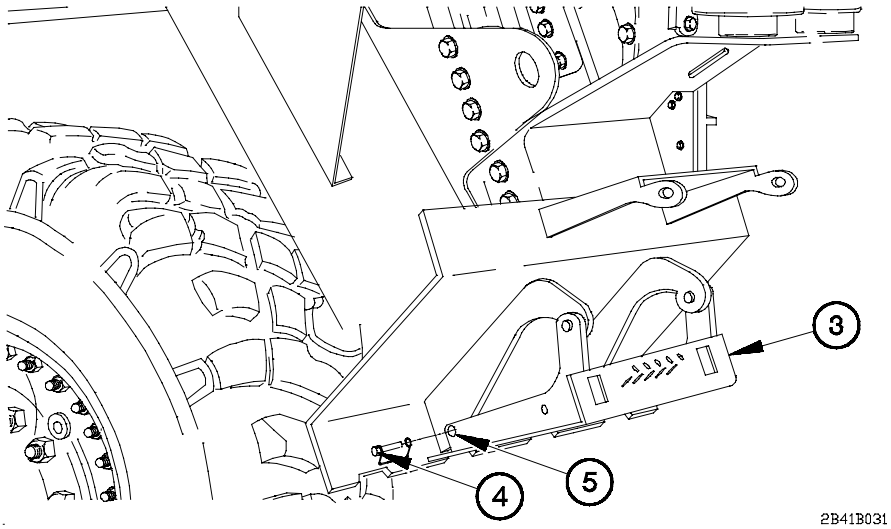

(4) Position sandshoe (3) to align holes (5) and install lock pins (4).

(5) Perform steps (1) through (4) for other stiffleg.

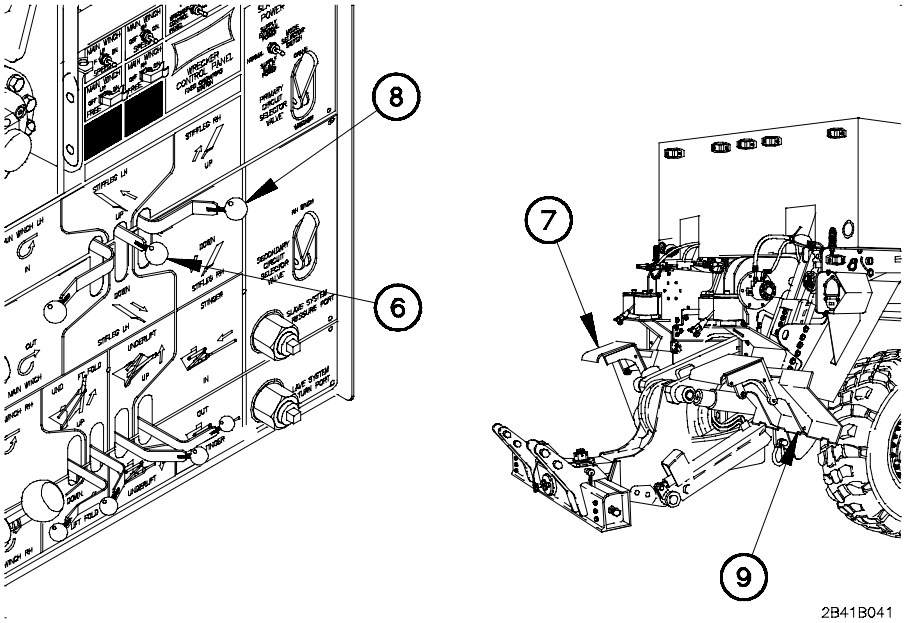

WARNING

- **Keep hands and feet clear of stifflegs during operation. Failure to comply may result in serious injury to personnel or damage to equipment.**
- **Do not raise vehicle tires off ground with stifflegs. Vehicle may roll over. Failure to comply may result in serious injury or death to personnel or damage to equipment.**
- **Stifflegs must be positioned so that vehicle is level from side to side. Vehicle may roll over. Failure to comply may result in serious injury or death to personnel or damage to equipment.**

NOTE

When using stifflegs with sandshoes up, blade portion should be allowed to penetrate ground until downward travel of stiffleg stops.

(6) Position STIFFLEG LH (left hand) lever (6) to DOWN to lower stiffleg (7).

(7) Position STIFFLEG RH (right hand) lever (8) to DOWN to lower stiffleg (9).

2-41. STIFFLEGS OPERATION (M1089) (CONT)

c. Raising Stifflegs.

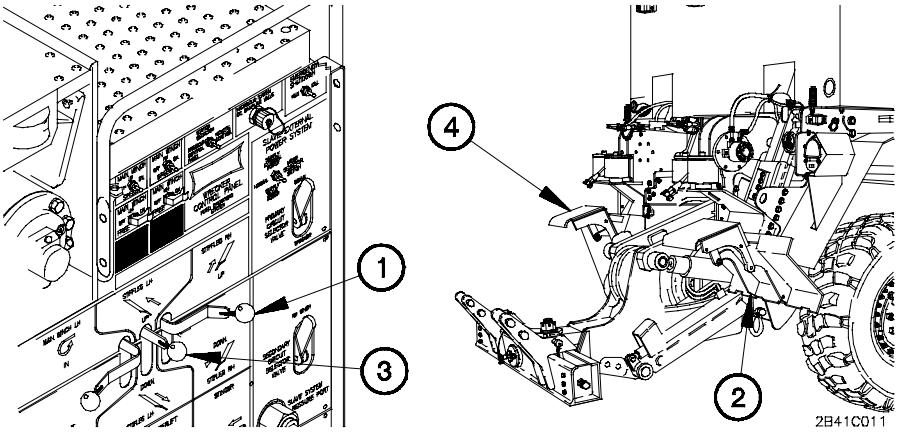

(1) Position STIFFLEG RH (right hand) lever (1) to UP until stiffleg (2) is fully raised.

(2) Position STIFFLEG LH (left hand) lever (3) to UP until stiffleg (4) is fully raised.

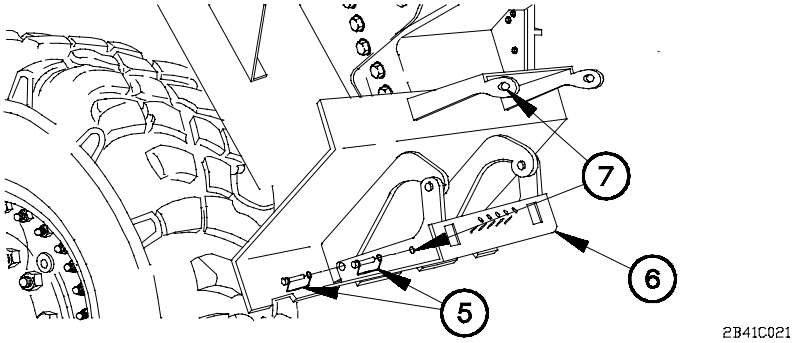

WARNING

Sandshoe weighs approximately 70 lbs (32 kgs). Use the aid of an assistant to lower/raise sandshoe. Failure to comply may result in injury to personnel.

NOTE

- Perform steps (3) through (5) if sandshoes were used.
- Steps (3) and (4) require the aid of an assistant.

(3) Remove two lock pins (5) and raise sandshoe (6).

(4) Position sandshoe (6) to align holes (7) and install lock pins (5).

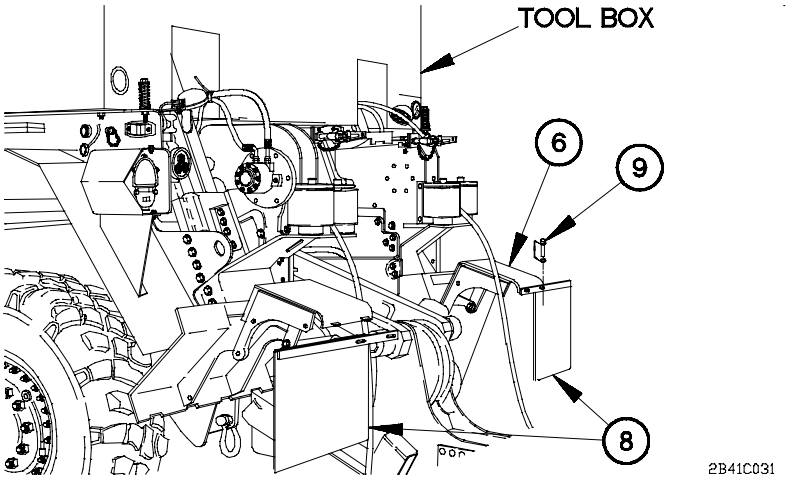

(5) Remove two mudflaps (8) and four lock pins (9) from tool box.

(6) Install mudflap (8) on sandshoe (6) with two lock pins (9).

(7) Perform steps (3), (4), and (6) for other stiffleg.

d. Shut Down Wrecker.

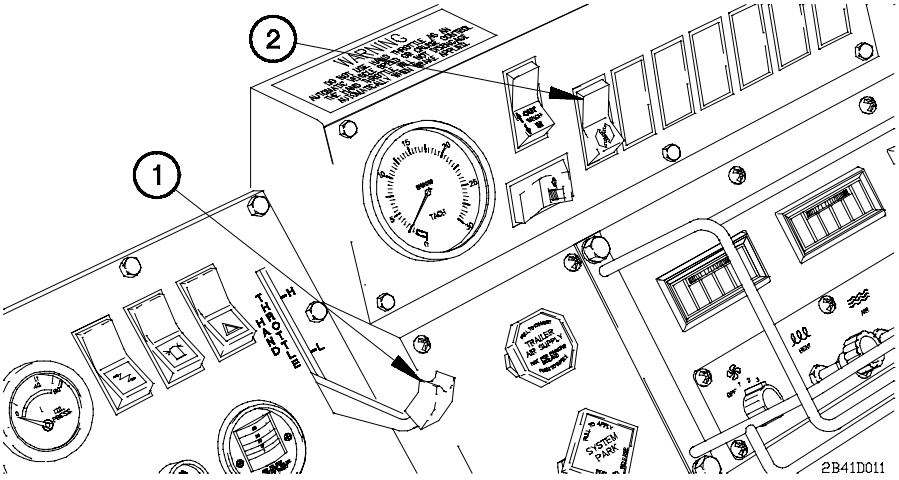

(1) Set engine speed to idle (750 rpm) by decreasing HAND THROTTLE lever (1) to full down position.

(2) Position PTO switch (2) to off.

(3) Shut down engine (para 2-27f).

2-42. 30K WINCH OPERATION

a. 30K Winch Operation with Load.

WARNING

Ensure there are at least five wraps of cable on hoist drum at all times. Failure to comply may result in serious injury or death to personnel or damage to equipment.

CAUTION

Ensure hydraulic shutoff valve and return valve are open before operating hydraulic equipment. Failure to comply may result in damage to equipment.

(1) Start engine (para 2-27a or b).

(2) Position vehicle so the pull is as straight as possible and the 30K winch pull capacity is adequate for equipment to be recovered. Refer to FM 20-22 and Table 2-20. 30K Winch Pull Capacity.

Table 2-20. 30K Winch Pull Capacity

Cable Layer	Maximum Line Pull (cable reeled in at high speed)	Maximum Line Pull (cable reeled in at low speed)
Bottom Layer (five wraps minimum)	15,000 lbs (66,720 N)	30,000 lbs (133,440 N)
2nd Layer	12,720 lbs (56,579 N)	25,440 lbs (113,157 N)
3rd Layer	11,045 lbs (49,128 N)	22,090 lbs (98,256 N)
4th Layer	9,758 lbs (43,404 N)	19,515 lbs (86,803 N)
5th Layer	8,740 lbs (38,876 N)	17,480 lbs (77,751 N)
Top Layer	7,915 lbs (35,206 N)	15,830 lbs (70,412 N)

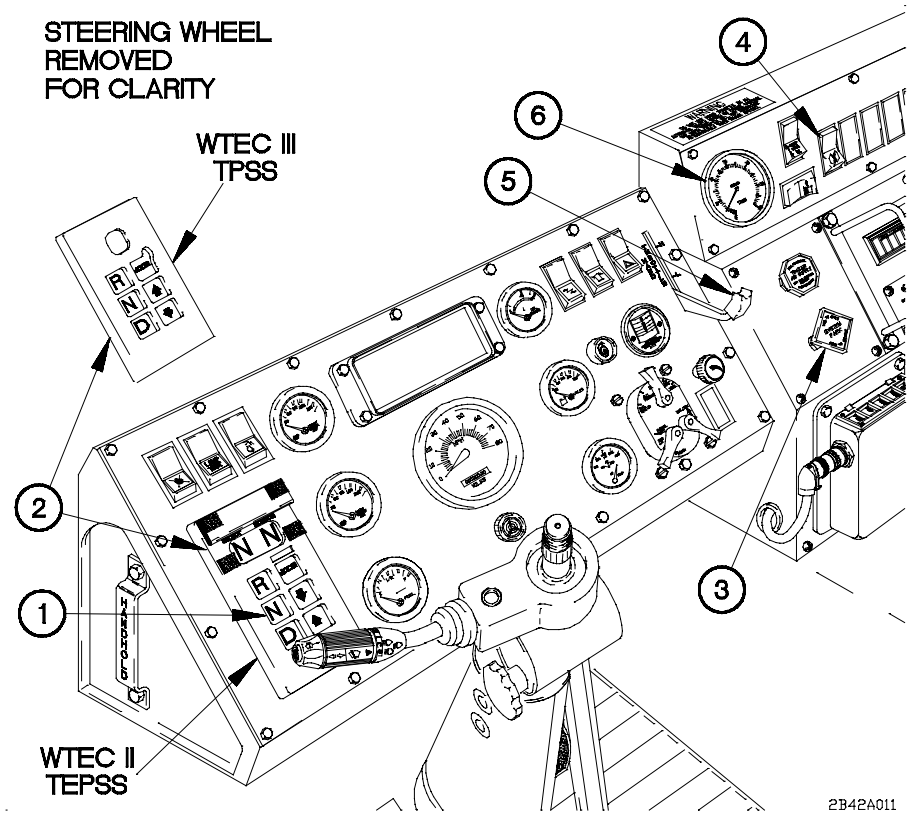

(3) Press N (Neutral) button (1) on WTEC II TEPSS (2) or WTEC III TPSS (2).

(4) Pull out SYSTEM PARK control (3).

(5) Position PTO switch (4) to on.

CAUTION

Keep tachometer within 1,250-1,450 rpm when Power Take-Off (PTO) is engaged. Do not exceed 1,450 rpm. Failure to comply may result in damage to equipment.

NOTE

In the event of a tachometer failure a HAND THROTTLE lever positioned to L is approximately 1,250-1,450 rpm.

(6) Set engine speed by increasing HAND THROTTLE lever (5) until tachometer (6) reads 1,250-1,450 rpm.

2-42. 30K WINCH OPERATION (CONT)

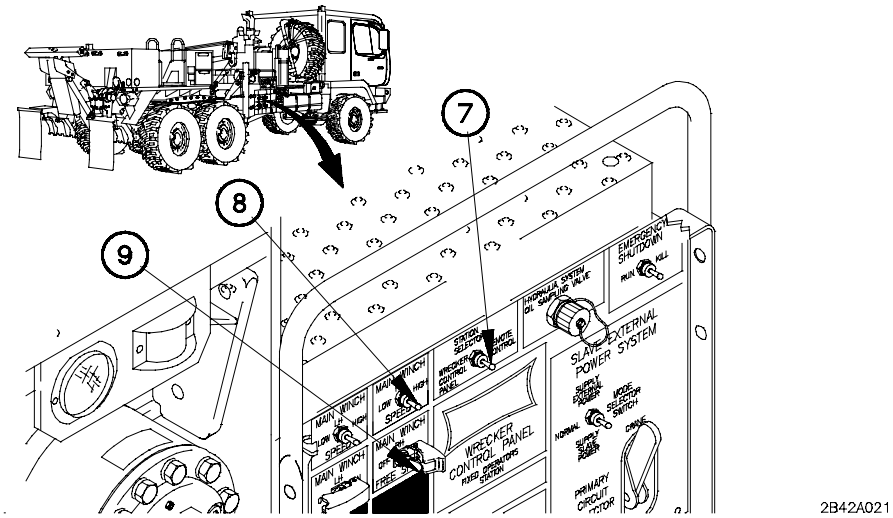

2B42A021

WARNING

Goggles must be worn while operating wrecker control panel. Blowing dust and debris may become airborne while engine is running. Failure to comply may result in injury to personnel.

NOTE

LH and RH 30K winch controls operate the same way. RH 30K winch controls are shown.

(7) Connect wrecker remote control (para 2-44b).

(8) Position STATION SELECTOR switch (7) to REMOTE CONTROL.

(9) Position MAIN WINCH RH SPEED switch (8) to LOW.

CAUTION

MAIN WINCH RH FREE SPOOL switch must be in the OFF position while paying out cable. Failure to comply may result in damage to equipment.

(10) Position MAIN WINCH RH FREE SPOOL switch (9) to OFF.

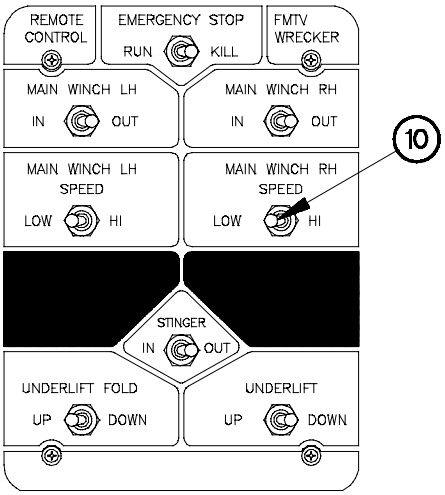

(11) Lower stifflegs (para 2-41b).

CAUTION

MAIN WINCH RH SPEED switch must be in LOW position during payout of the first five wraps of cable. Failure to comply may result in damage to equipment.

(12) Position MAIN WINCH RH SPEED switch (10) to LOW.

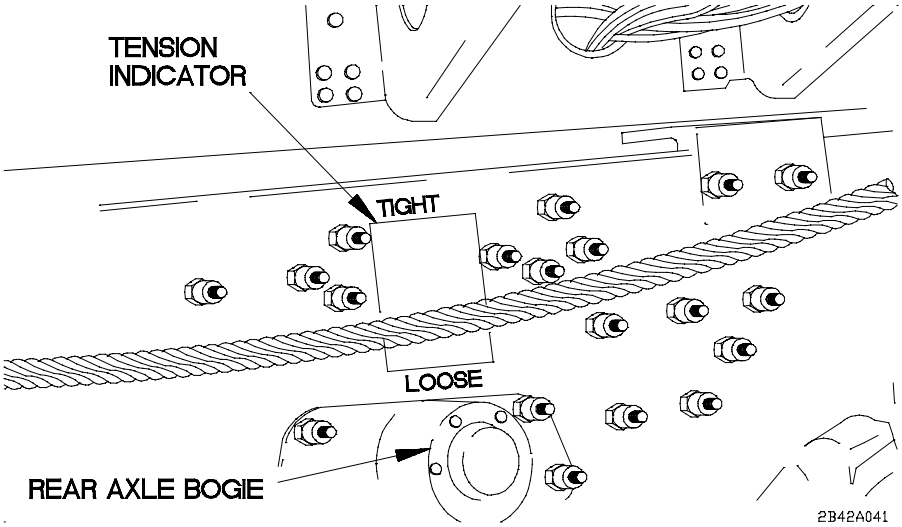

(13) Remove any dirt and mud from tension indicator.

2-42. 30K WINCH OPERATION (CONT)

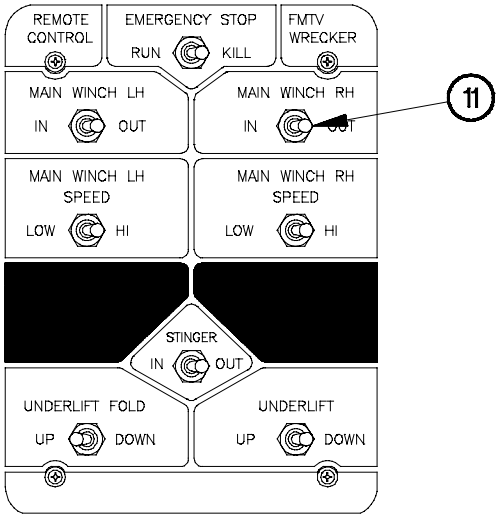

2B42A051

CAUTION

Cable tension must be checked prior to use. Some slack in the cable is desired. Excessive tension can cause damage to power fairlead and cable. Failure to comply may result in damage to equipment.

(14) Position MAIN WINCH RH switch (11) to OUT.

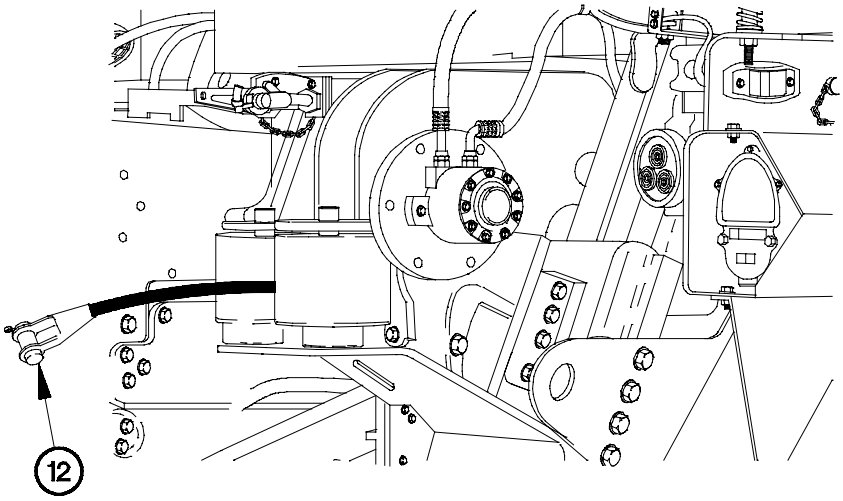

2B42A061

(15) Pay out cable (12) for approximately 20 seconds.

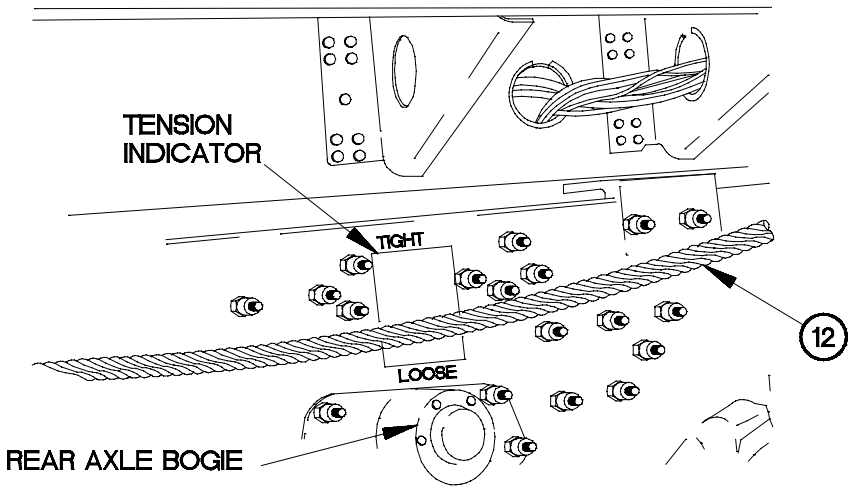

2B42A081

WARNING

Wear heavy leather-palmed work gloves when handling cable. Cables can become frayed or contain broken wires. Never let moving cable slide through hands, even when wearing gloves. Failure to comply may result in injury to personnel.

NOTE

- If the power fairlead does not pay out the cable at the same rate of speed as the 30K winch, cable will hang loose.
- Operator should stand approximately four feet away from the rear axle bogie to view the tension indicator during pay out.

(16) During pay out, check that cable (12) passes through tension indicator, directly over rear axle bogie.

(a) If cable (12) is too loose and hangs below loose mark on tension indicator, stop pay out and perform steps (17), (19), and (20).

2-42. 30K WINCH OPERATION (CONT)

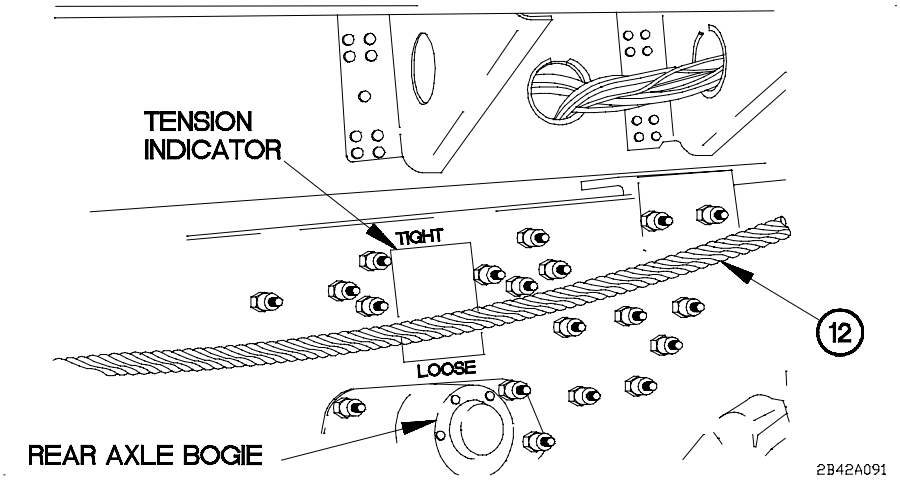

(b) If cable (12) is too tight and is above tight mark on tension indicator, stop pay out and perform steps (18) through (20).

(c) If cable (12) passes between loose and tight marks on tension indicator, proceed to step (22).

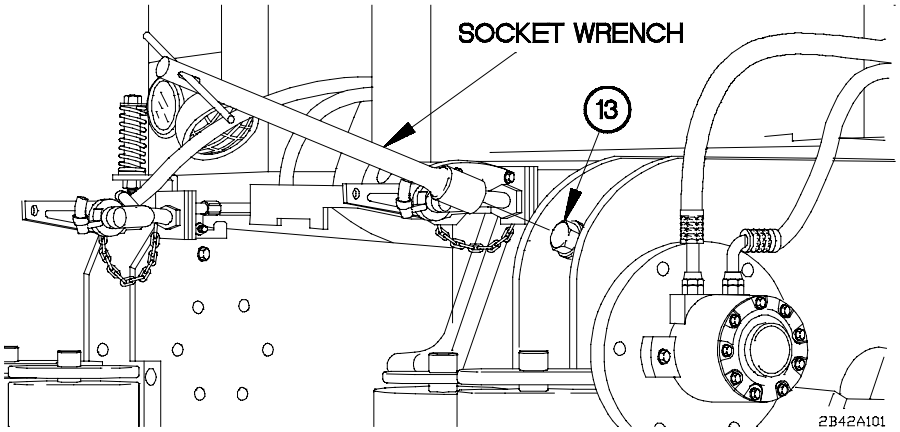

CAUTION

Power fairlead tension bolt must not be overtightened. Overtightening power fairlead tension bolt will put strain on cable, winch motor, and power fairlead. Failure to comply may result in damage to equipment.

(17) Turn tension screw (13) to the right one complete turn.

(18) Turn tension screw (13) to the left one complete turn.

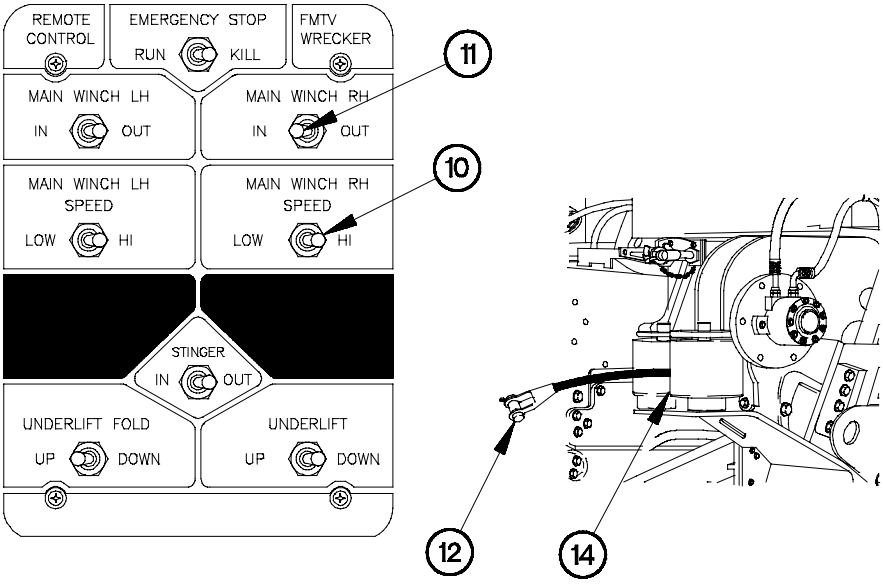

2B42A111

CAUTION

Ensure cable is clear of crossbar and sandshoe when reeling in cable. The cable socket may catch on crossbar or sandshoe. Failure to comply may result in damage to equipment.

(19) Position MAIN WINCH RH switch (11) to IN and reel in cable (12) until approximately 12 inches of cable is hanging from the power fairlead (14).

(20) Repeat steps (15) and (16).

NOTE

After the first five wraps of cable have been payed out, positioning MAIN WINCH RH SPEED switch to HI (high) position is allowed.

(21) Position MAIN WINCH RH SPEED switch (10) to HI (high).

2-42. 30K WINCH OPERATION (CONT)

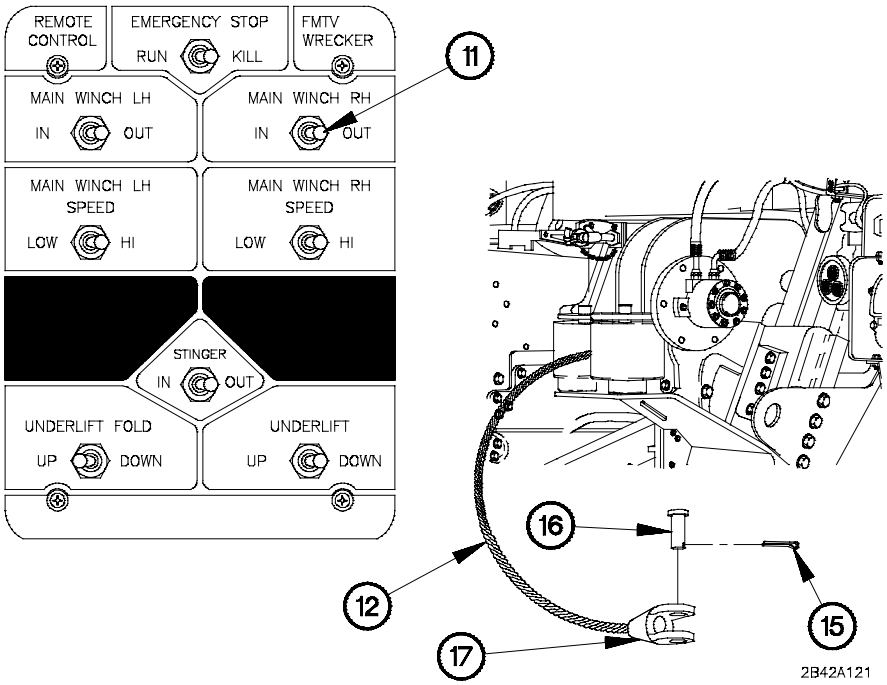

NOTE

If weight of equipment to be recovered exceeds 15 tons (14 metric tons), refer to FM 20-22 for operational requirements and para 2-77 for snatch block installation/removal.

(22) Position MAIN WINCH RH switch (11) to OUT and pay out cable (12) to vehicle to be recovered.

NOTE

Perform steps (23) through (32) when recovering a vehicle.

(23) Remove cotter pin (15) and pin (16) from socket (17).

(24) Connect socket (17) to vehicle to be recovered.

(25) Install pin (16) and cotter pin (15) in socket (17).

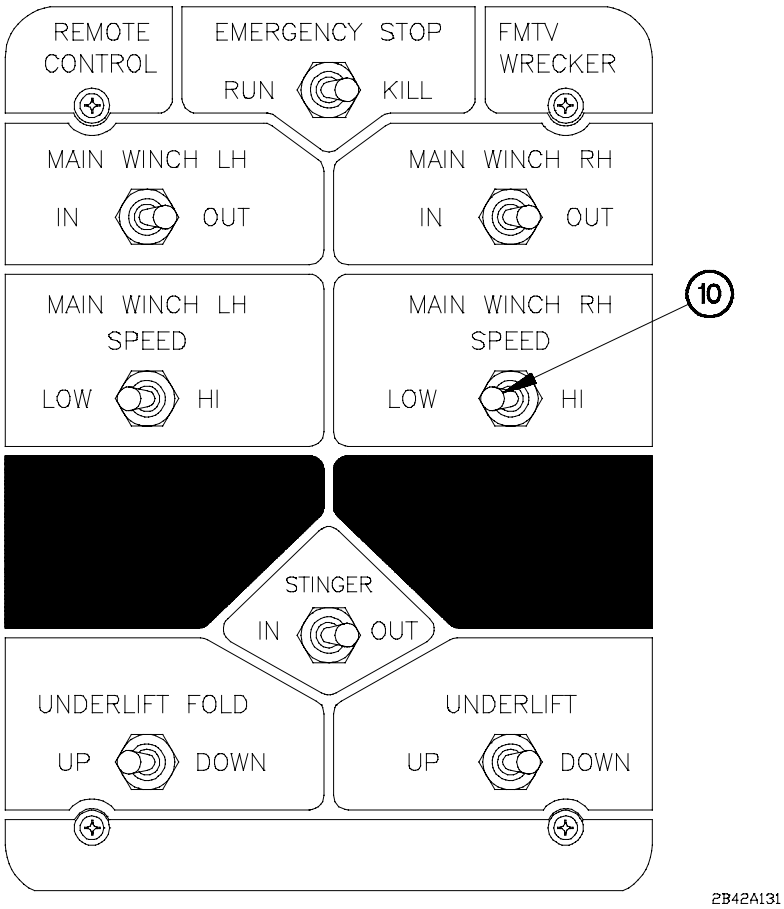

WARNING

Keep all personnel clear of area when tension is on cable. Cable could break or whip out of control. Failure to comply may result in serious injury or death to personnel.

CAUTION

Do not attempt to pull load greater than 30K winch capacity. Failure to comply may result in damage to equipment.

(26) Position MAIN WINCH RH SPEED switch (10) to LOW.

2-42. 30K WINCH OPERATION (CONT)

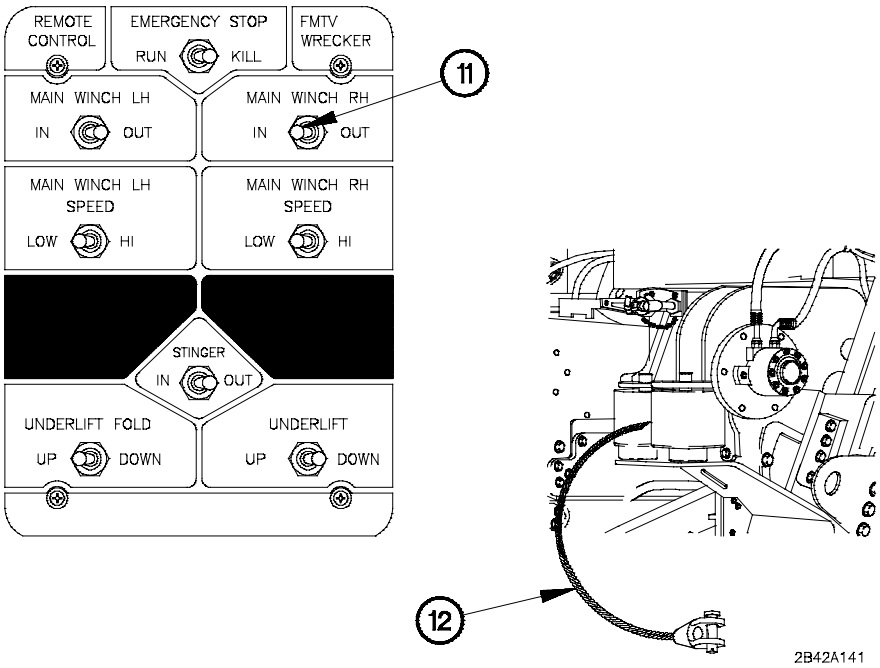

WARNING

Slowly take out slack in cable before recovering equipment. Failure to comply may result in serious injury or death to personnel.

CAUTION

Ensure that recovered cable winds level. If it does not, pay out cable and repeat recovery. Failure to comply may result in damage to equipment.

(27) Position MAIN WINCH RH switch (11) to IN.

■ (28) Reel in cable (12) until recovered vehicle is within approximately 10 feet (305 cm) of vehicle.

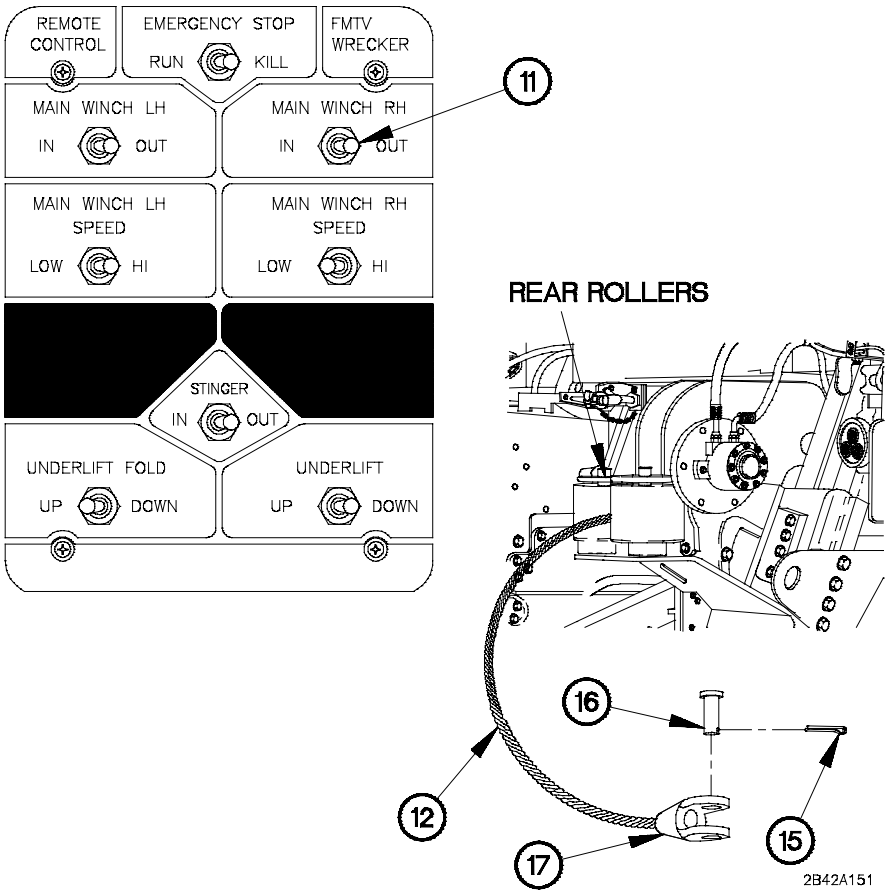

WARNING

Use extreme caution when disconnecting cable. Cable may spin rapidly to the left approximately 1 1/2 turns when disconnected. Failure to comply may result in serious injury or death to personnel.

(29) Position MAIN WINCH RH switch (11) to OUT to pay out cable (12) until there is enough slack to disconnect socket (17) from recovered vehicle.

(30) Remove cotter pin (15) and pin (16) from socket (17).

(31) Detach socket (17) from recovered vehicle.

(32) Install pin (16) and cotter pin (15) in socket (17).

2-42. 30K WINCH OPERATION (CONT)

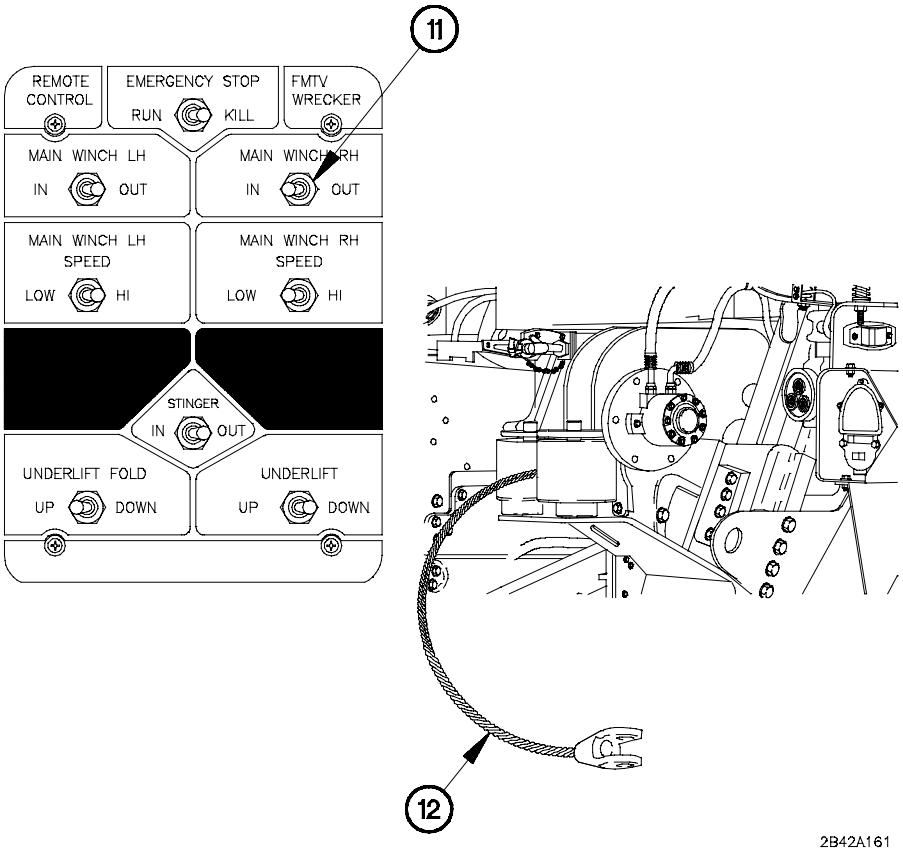

WARNING

Ensure there are at least five wraps of cable on hoist drum at all times. Failure to comply may result in serious injury or death to personnel or damage to equipment.

CAUTION

When reeling in cable, do not allow end of cable to contact rear rollers. Failure to comply may result in damage to equipment.

(33) Position MAIN WINCH RH switch (11) to IN.

(34) Reel in cable (12) until cable is fully recovered.

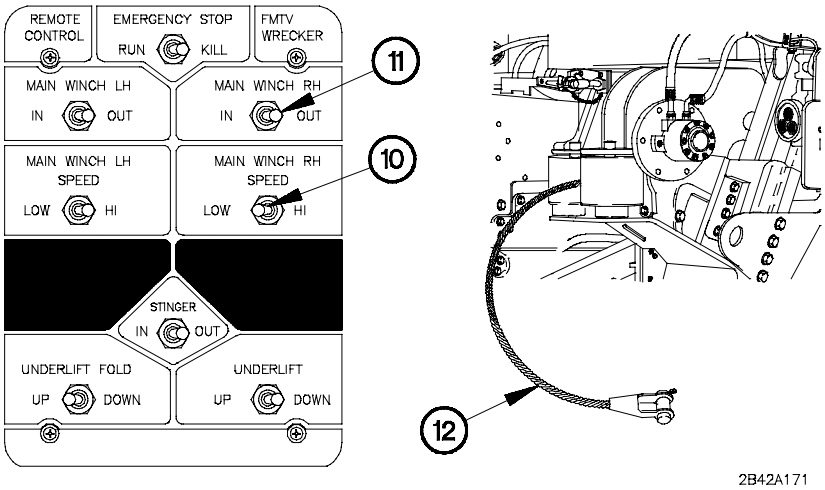

CAUTION

Ensure there are no gaps between layers of cable. Gaps between cable layers indicate loose winding. Failure to comply may result in damage to equipment.

NOTE

Perform steps (35) through (38) if cable is not winding properly.

(35) Position MAIN WINCH RH switch (11) to OUT.

(36) Pay out cable (12) until cable on 30K winch drum has clean wind.

CAUTION

Do not dead-end cable into rear rollers. Failure to comply may result in damage to equipment.

(37) Position MAIN WINCH RH SPEED switch (10) to LOW.

(38) Continue steps (33) through (37) until cable (12) is fully recovered.

2-42. 30K WINCH OPERATION (CONT)

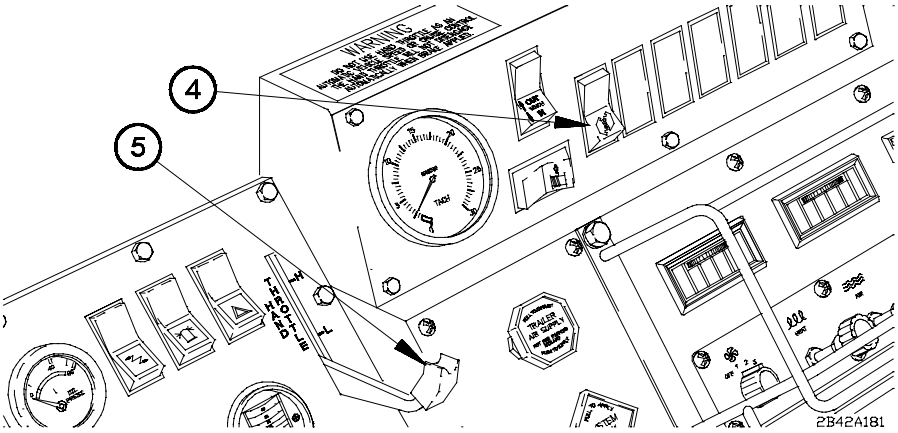

(39) Raise stifflegs (para 2-40c).

(40) Set engine speed to idle (750 rpm) by decreasing HAND THROTTLE lever (5) to full down position.

(41) Position PTO switch (4) to off.

(42) Shut down engine (para 2-27f).

(43) Disconnect wrecker remote control (para 2-44c).

(44) Notify Unit Maintenance to clean and lubricate cable.

b. 30K Winch Operation without Load.

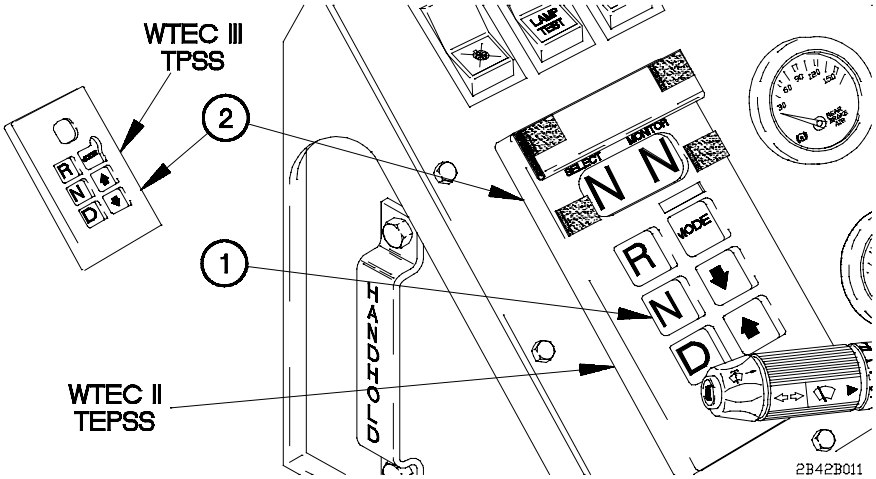

(1) Press N (Neutral) button (1) on WTEC II TEPSS (2) or WTEC III TPSS (2).

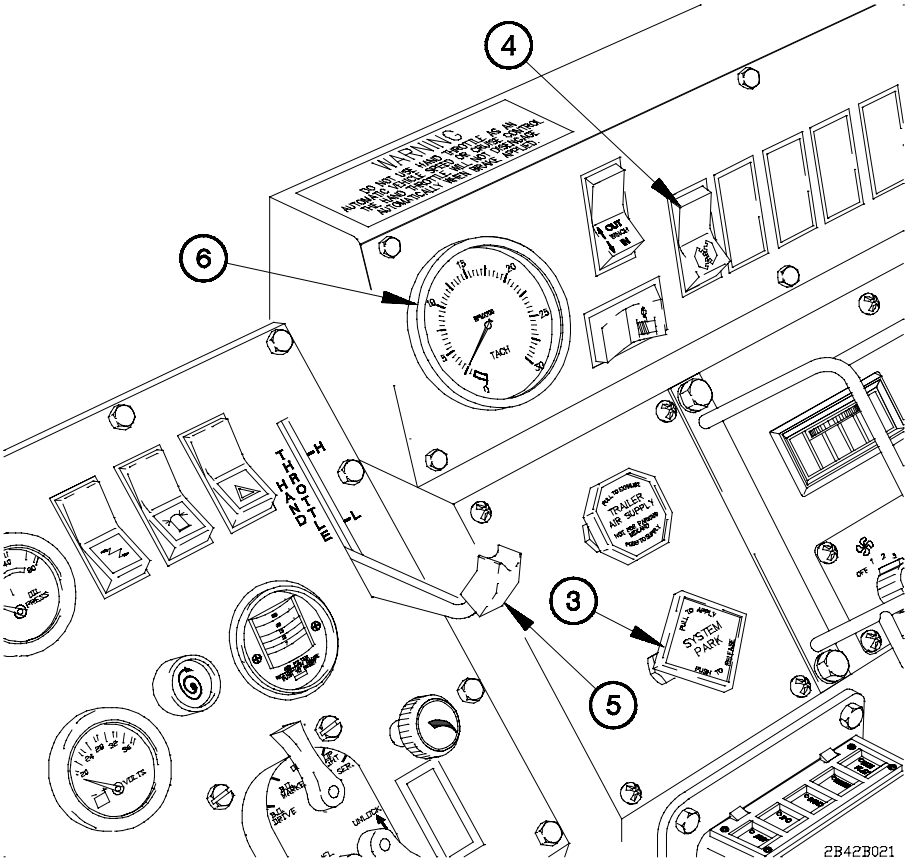

(2) Pull out SYSTEM PARK control (3).

(3) Position PTO switch (4) to on.

CAUTION

Keep tachometer within 1,250-1,450 rpm when Power Take-Off (PTO) is engaged. Do not exceed 1,450 rpm. Failure to comply may result in damage to equipment.

NOTE

In the event of a tachometer failure a HAND THROTTLE lever positioned to L is approximately 1,250-1,450 rpm.

(4) Set engine speed by increasing HAND THROTTLE lever (5) until tachometer (6) reads 1,250-1,450 rpm.

2-42. 30K WINCH OPERATION (CONT)

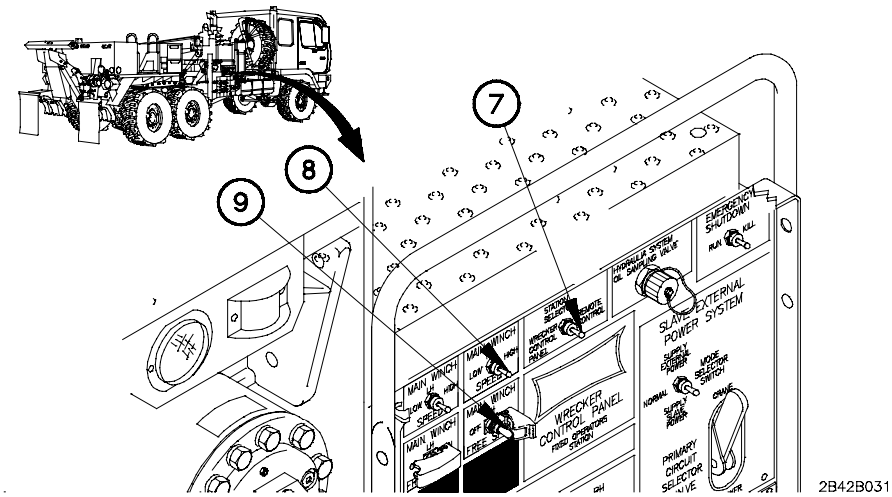

WARNING

Goggles must be worn while operating wrecker control panel. Blowing dust and debris may become airborne while engine is running. Failure to comply may result in injury to personnel.

NOTE

LH and RH 30K winch controls operate the same way. RH 30K winch controls shown.

(5) Connect wrecker remote control (para 2-44b).

(6) Position STATION SELECTOR switch (7) to REMOTE CONTROL.

(7) Position MAIN WINCH RH SPEED switch (8) to LOW.

CAUTION

MAIN WINCH RH FREE SPOOL switch must be in the OFF position while paying out cable. Failure to comply may result in damage to equipment.

(8) Position MAIN WINCH RH FREE SPOOL switch (9) to OFF.

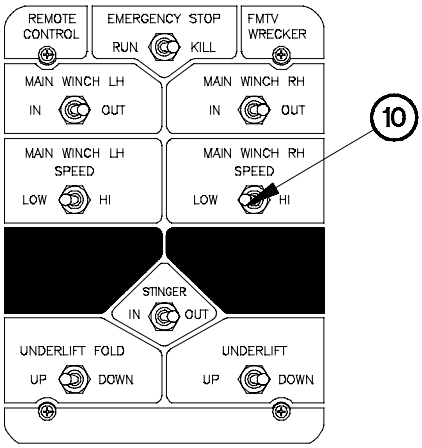

2B42B041

CAUTION

MAIN WINCH RH SPEED switch must be in LOW position during payout of the first five wraps of cable. Failure to comply may result in damage to equipment.

(9) Position MAIN WINCH RH SPEED switch (10) to LOW.

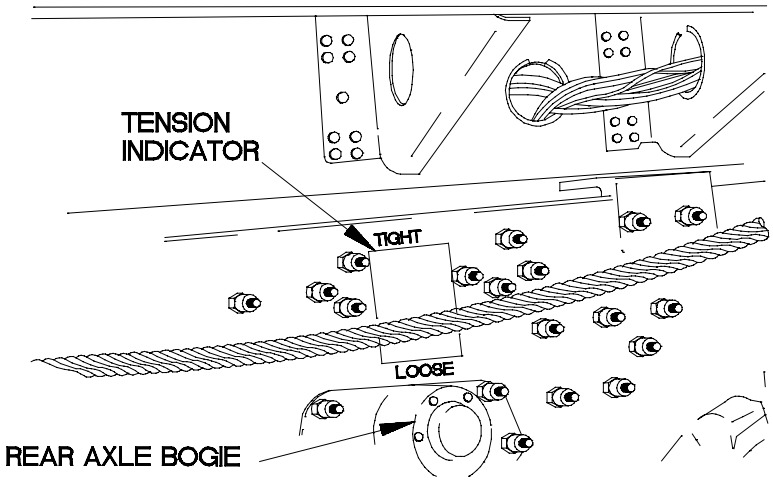

2B42B051

(10) Remove any dirt and mud from tension indicator.

2-42. 30K WINCH OPERATION (CONT)

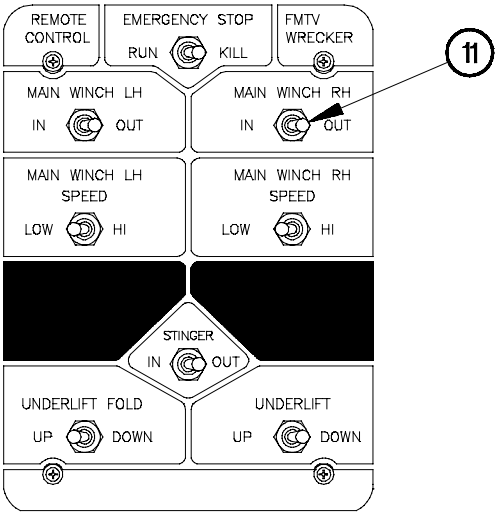

2B42B061

CAUTION

Cable tension must be checked prior to use. Some slack in the cable is desired. Excessive tension can cause damage to power fairlead and cable. Failure to comply may result in damage to equipment.

(11) Position MAIN WINCH RH switch (11) to OUT.

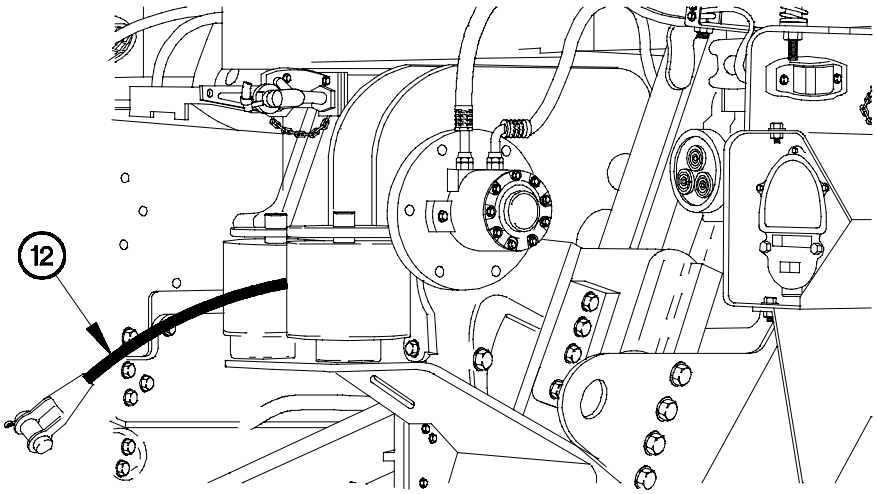

2B42B071

(12) Pay out cable (12) for approximately 20 seconds.

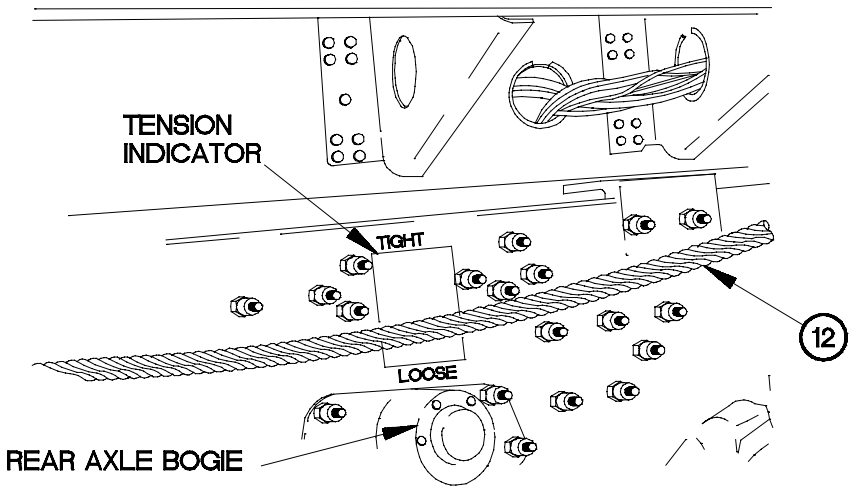

2B42B081

WARNING

Wear heavy leather-palmed work gloves when handling cable. Cables can become frayed or contain broken wires. Never let moving cable slide through hands, even when wearing gloves. Failure to comply may result in injury to personnel.

NOTE

- If the power fairlead does not pay out the cable at the same rate of speed as the 30K winch, cable will hang loose.
- Operator should stand approximately four feet away from the rear axle bogie to view the tension indicator during pay out.

(13) During pay out, check that cable (12) passes through tension indicator, directly over rear axle bogie.

(a) If cable (12) is too loose and hangs below loose mark on tension indicator, stop pay out and perform steps (14), (16), and (17).

2-42. 30K WINCH OPERATION (CONT)

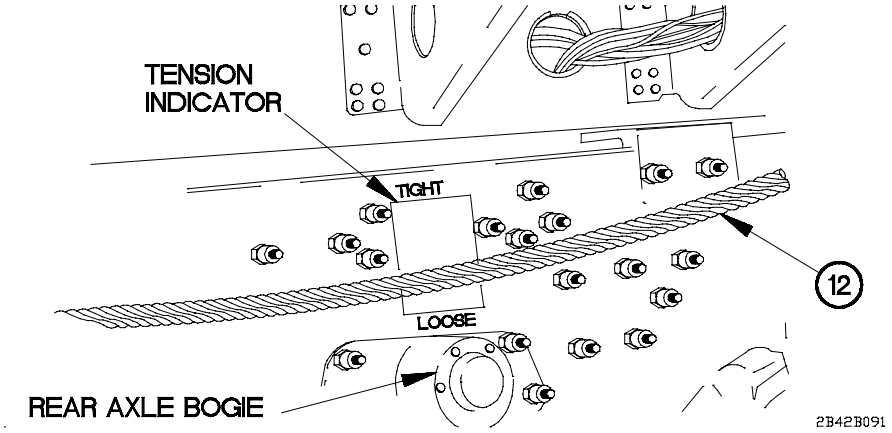

(b) If cable (12) is too tight and is above tight mark on tension indicator, stop pay out and perform steps (15) through (17).

(c) If cable (12) passes between loose and tight marks on tension indicator, proceed to step (18).

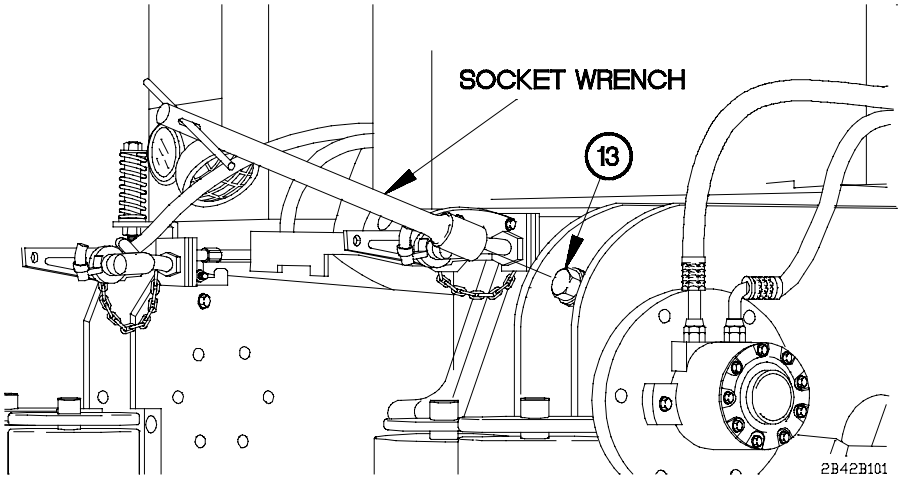

CAUTION

Power fairlead tension bolt must not be overtightened. Overtightening power fairlead tension bolt will put strain on cable, winch motor, and power fairlead. Failure to comply may result in damage to equipment.

(14) Turn tension screw (13) to the right one complete turn.

(15) Turn tension screw (13) to the left one complete turn.

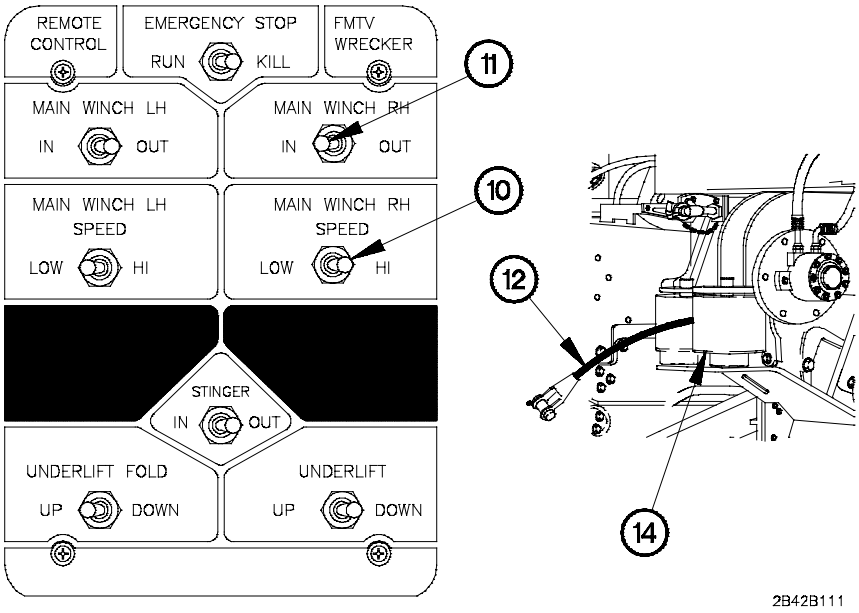

CAUTION

Ensure cable is clear of crossbar and sandshoe when reeling in cable. The cable socket may catch on crossbar or sandshoe. Failure to comply may result in damage to equipment.

(16) Position MAIN WINCH RH switch (11) to IN and reel in cable (12) until approximately 12 in. (61 cm) of cable is hanging from the power fairlead (14). ■

(17) Repeat steps (12) and (13).

NOTE

After the first five wraps of cable have been payed out, positioning MAIN WINCH RH SPEED switch to HI (high) is allowed.

(18) Position MAIN WINCH RH SPEED switch (10) to HI (high).

2-42. 30K WINCH OPERATION (CONT)

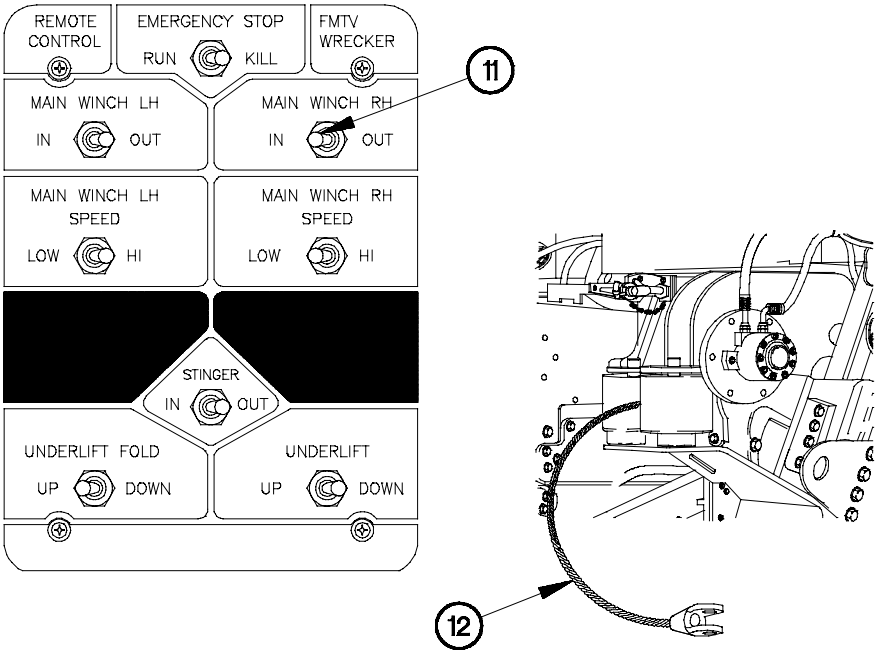

(19) Position MAIN WINCH RH switch (11) to OUT and pay out cable (12) its entire length.

(20) Position MAIN WINCH RH switch (11) to IN.

CAUTION

Ensure there are no gaps between layers of cable. Gaps between cable layers indicate loose winding. Failure to comply may result in damage to equipment.

(21) Reel in cable (12) until cable is fully recovered.

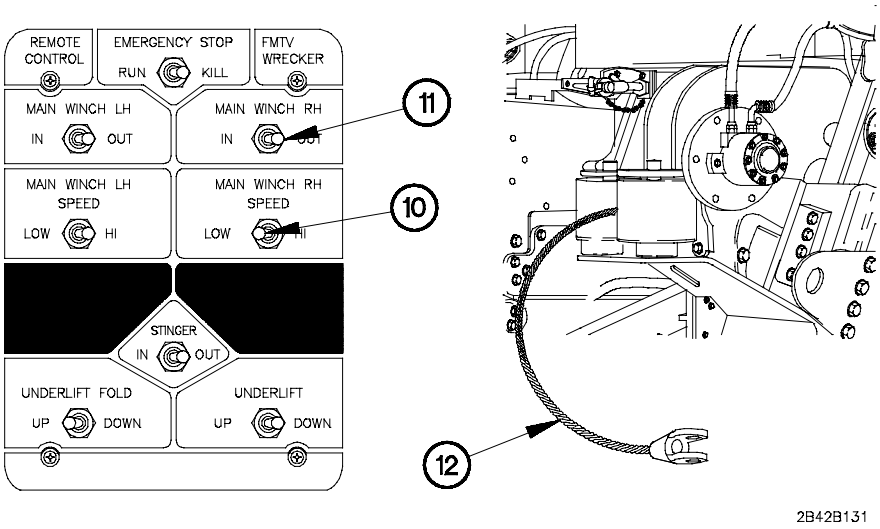

CAUTION

Ensure there are no gaps between layers of cable. Gaps between cable layers indicate loose winding. Failure to comply may result in damage to equipment.

NOTE

Perform steps (22) through (25) if cable is not winding properly.

(22) Position MAIN WINCH RH switch (11) to OUT.

(23) Pay out cable (12) until cable on 30K winch drum has clean wind.

NOTE

Do not dead-end cable into rear rollers. Failure to comply may result in damage to equipment.

(24) Position MAIN WINCH RH SPEED switch (10) to LOW.

(25) Continue steps (20) through (24) until cable (12) is fully recovered.

2-42. 30K WINCH OPERATION (CONT)

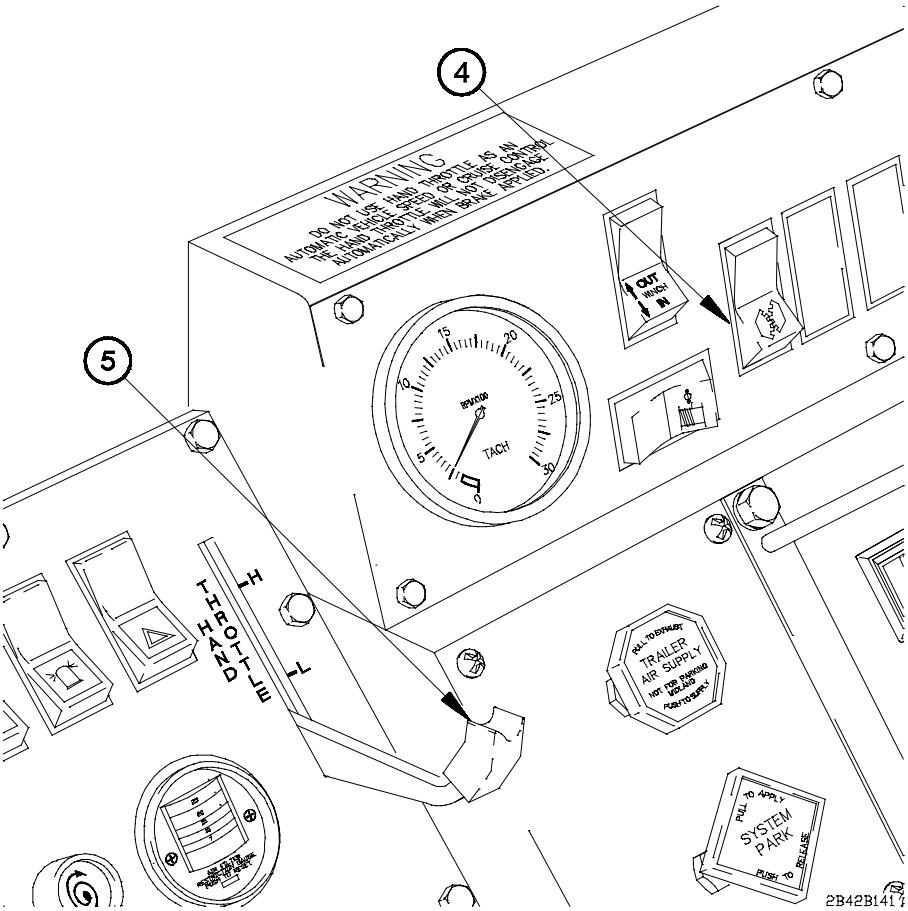

(26) Set engine speed to idle (750 rpm) by decreasing HAND THROTTLE lever (5) to full down position.

(27) Position PTO switch (4) to off.

(28) Shut down engine (para 2-27f).

(29) Disconnect wrecker remote control (para 2-43c).

(30) Notify Unit Maintenance to clean and lubricate cable.

2-43. WRECKER FLAT TOWING

WARNING

- **M1089 should not be operated at speeds over 15 mph (24 km/h) except on paved roads when Operator determines that vehicle being towed and terrain conditions allow safe operation. The following are maximum speeds for safe operation. Exceeding these speeds may result in loss of vehicle control.**

- **DO NOT flat tow a fully loaded MTV and trailer combination. The MTV Wrecker towbar can be damaged if weight capacity is exceeded. Failure to comply may result in serious injury or death to personnel or damage to equipment.**

- **When towing a vehicle with nonfunctional brakes, use extreme caution and reduce/adjust speed accordingly. Failure to comply may result in serious injury or death to personnel or damage to equipment.**

TERRAIN CONDITION	MAXIMUM SPEED
on road (level)	35 mph (56 km/h)
on road (hilly)	30 mph (48 km/h)
off road	15 mph (24 km/h)

Exceeding maximum speed may result in serious injury or death to personnel or damage to equipment.

CAUTION

- Extreme care must be used when towing disabled vehicle to prevent further damage to disabled vehicle. Failure to comply may result in damage to equipment.

- Fluid level in hydraulic tank must be visible in sight glass and hydraulic supply and shutoff valves must be open before starting engine. Failure to comply may result in damage to equipment.

NOTE

- Tow a disabled vehicle from the front whenever possible. Rear air brakes (if equipped) on disabled vehicle can be used to assist stopping.

- Check Operator's manual for disabled vehicle for towing preparation before towing vehicle.

- For detailed instructions on towing procedures refer to FM 20-22.

2-43. WRECKER FLAT TOWING (CONT)

Perform Towing Disabled Vehicle (para 2-62).

a. Vehicles M1089 Can Tow. The following vehicles can be towed with M1089:

- M35 Series
- M939 Series and M809 Series
- M998 Series
- M1008 Series
- M1078 and M1083 Series (M1089 can be towed from the front only)

b. Towing Pintle Assembly Installation.

CAUTION

Underlift assembly must be fully raised. Failure to comply may result in damage to equipment.

(1) Position underlift assembly for flat tow (para 2-44).

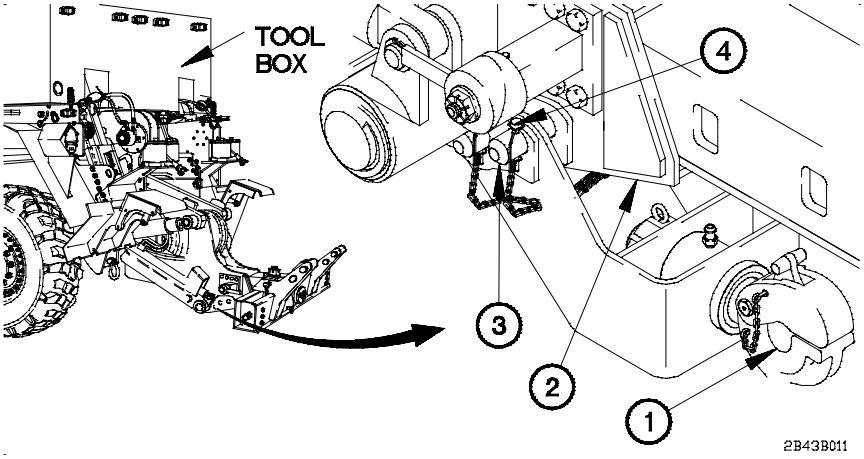

(2) Remove towing pintle assembly (1) from tool box.

(3) Install towing pintle assembly (1) on boom frame (2) with two pins (3).

(4) Install two lock pins (4) in each pin (3).

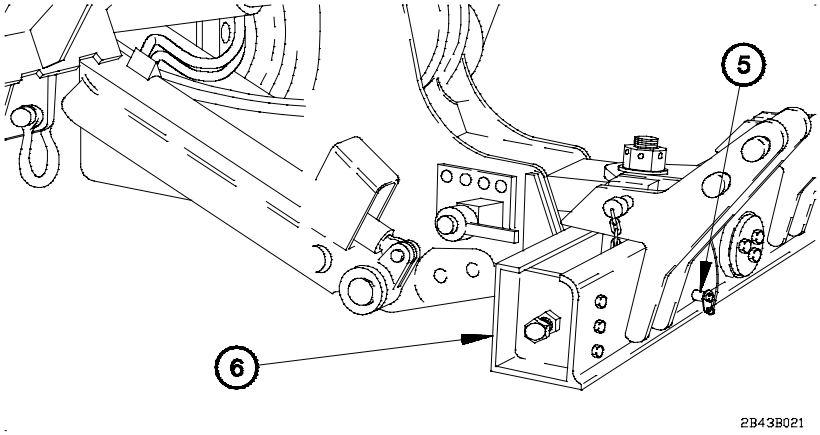

CAUTION

Crossbar lock pin must be securely installed to prevent interference with towbar. Failure to comply may result in damage to equipment.

(5) Install crossbar lock pin (5) in crossbar (6).

c. Towbar Connection.

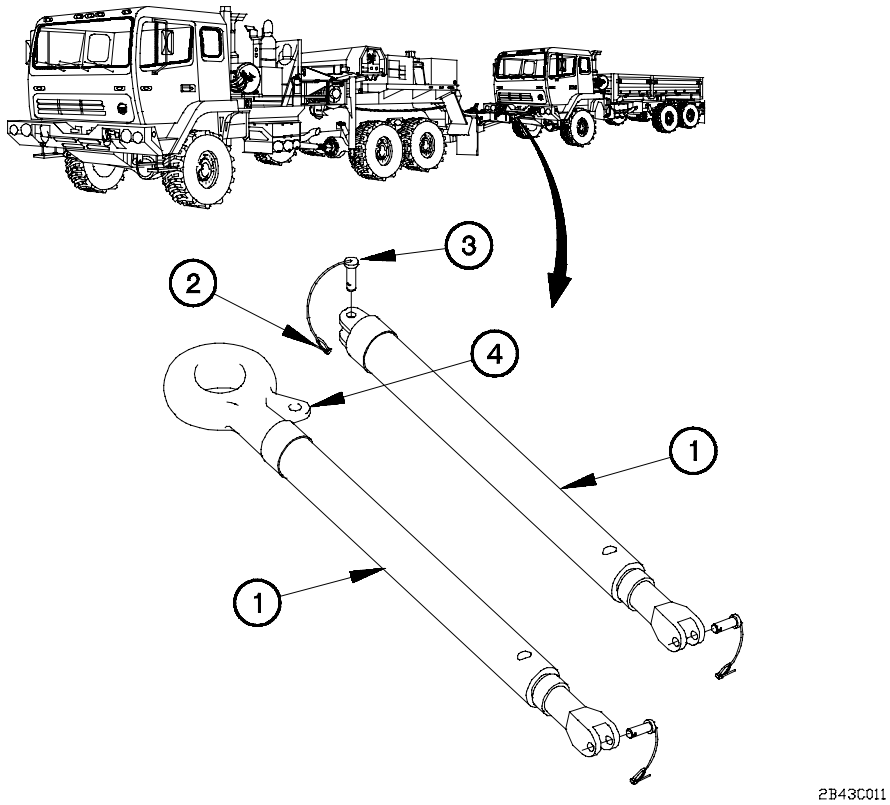

WARNING

Towbar weighs approximately 150 lbs (68 kgs) and requires two or more personnel to carry. Failure to comply may result in injury to personnel.

NOTE

Step (1) requires the aid of an assistant.

(1) Position rear of M1089 near front of disabled vehicle with towbar (1) between vehicles.

(2) Remove lynch pin (2) from pin (3).

(3) Remove pin (3) from towbar (1).

(4) Separate towbar (1) at pivot point (4).

2-43. WRECKER FLAT TOWING (CONT)

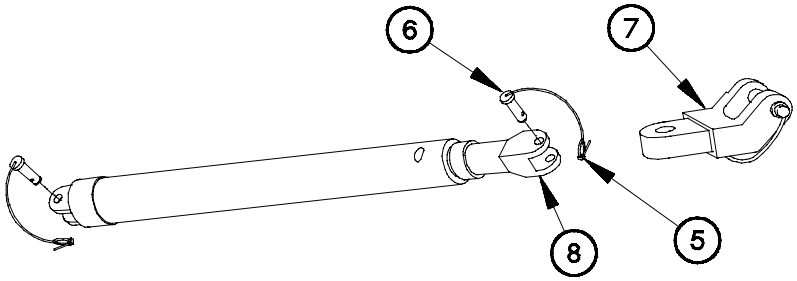

2B43C021

NOTE

Left and right side of towbar adapters are removed from towbar clevises the same way. Left side shown.

(5) Remove lynch pin (5), pin (6), and towbar adapter (7) from towbar clevis (8).

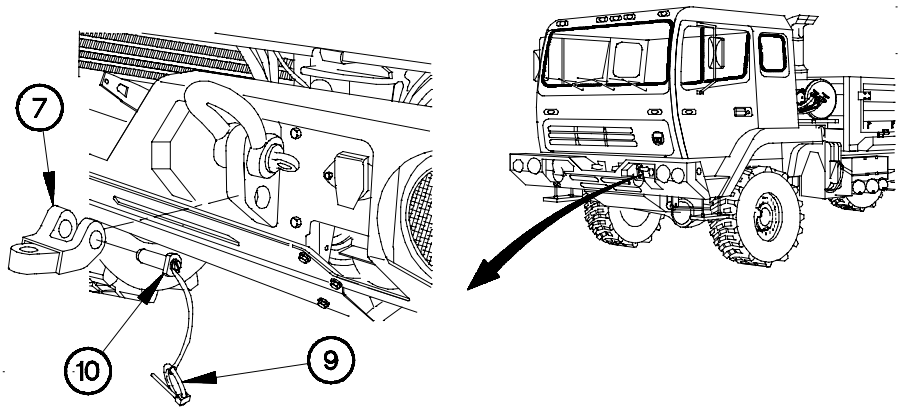

2B43C031

NOTE

Left and right side towbar adapters are installed on tow eyes the same way. Left side shown.

(6) Remove lynch pin (9) and pin (10) from towbar adapter (7).

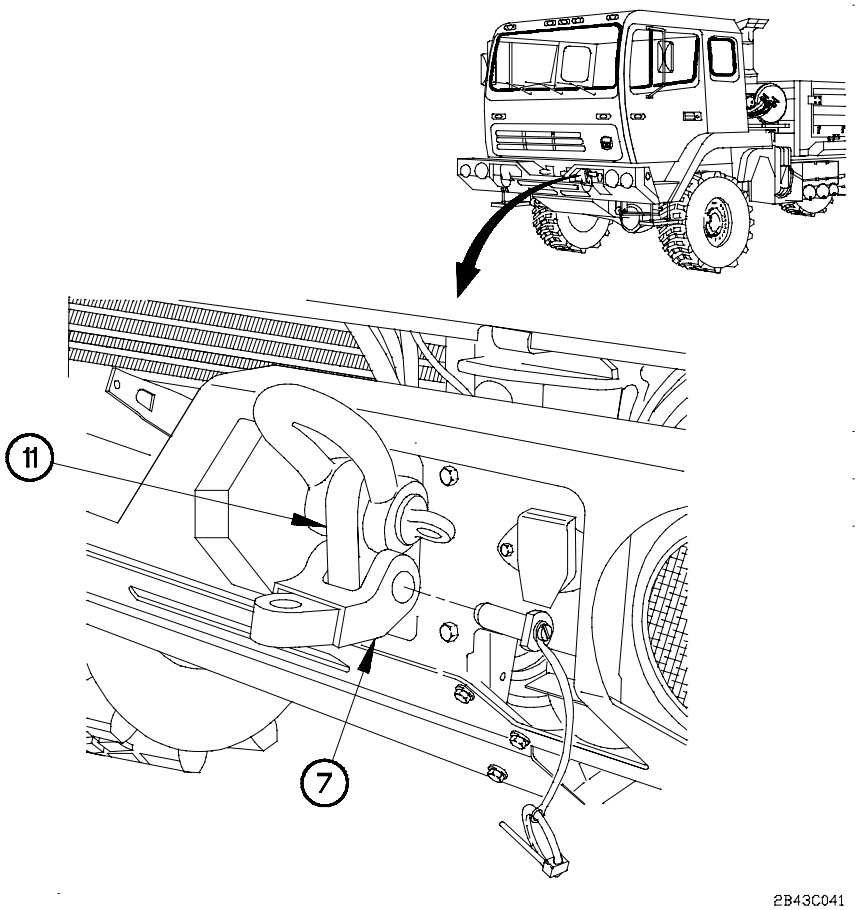

WARNING

M1089 and disabled vehicle must have parking brakes applied before connecting/disconnecting towbar. Failure to comply may cause vehicles to roll into each other and may result in serious injury or death to personnel or damage to equipment.

NOTE

It may be necessary to remove shackles on some vehicles.

(7) Install towbar adapter (7) on bottom tow eye (11) of disabled vehicle.

2-43. WRECKER FLAT TOWING (CONT)

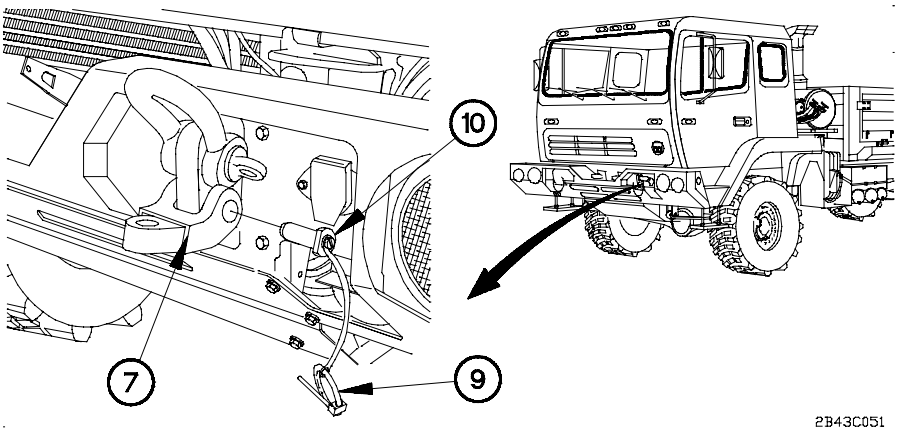

CAUTION

Ensure pin is installed with lynch pin hole down. Failure to comply may result in damage to equipment.

(8) Install pin (10) in towbar adapter (7).

(9) Install lynch pin (9) in pin (10).

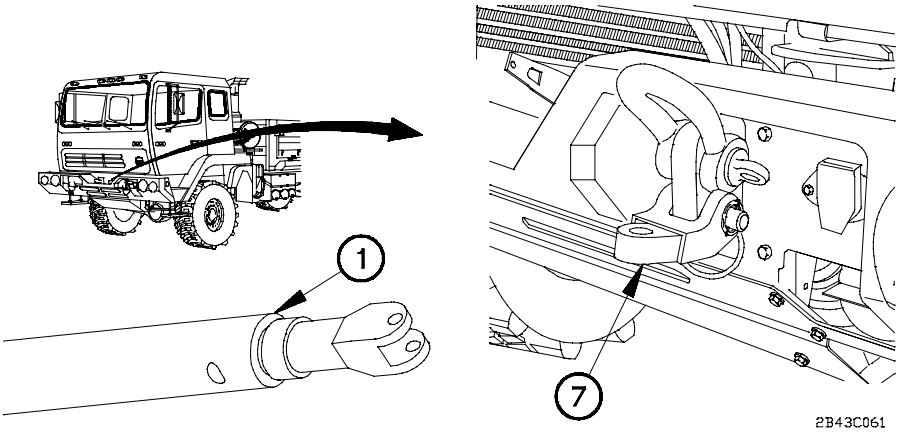

NOTE

- Left and right sides of towbar are installed on towbar adapters the same way. Left side shown.
- Step (10) requires the aid of an assistant.

(10) Install towbar (1) on towbar adapter (7).

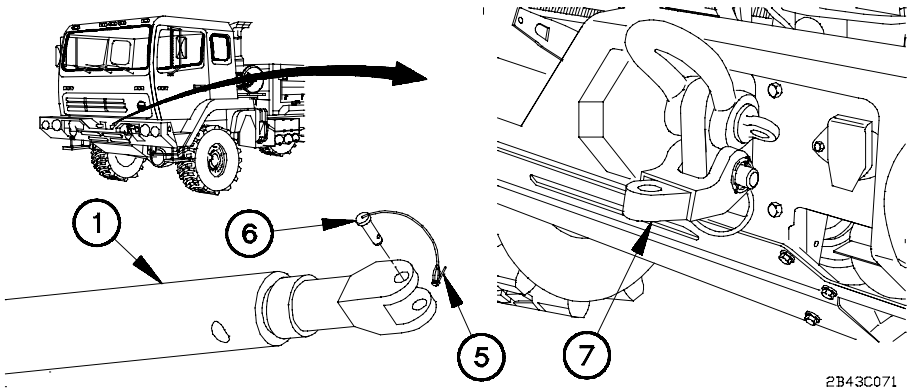

CAUTION

Ensure pins are installed with lynch pin hole down. Failure to comply may result in damage to equipment.

(11) Install pin (6) in towbar (1) and towbar adapter (7).

(12) Install lynch pin (5) in pin (6).

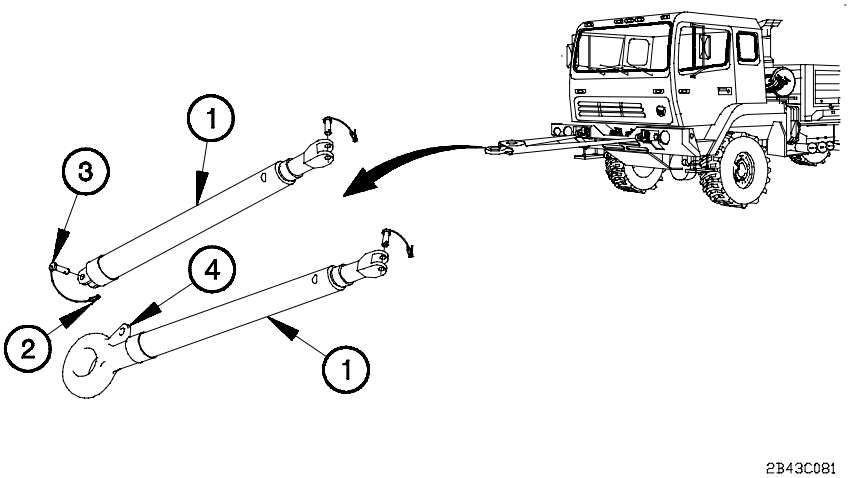

(13) Align left and right sides of towbar (1) at pivot point (4).

(14) Install pin (3) in towbar (1).

(15) Install lynch pin (2) in pin (3).

2-43. WRECKER FLAT TOWING (CONT)

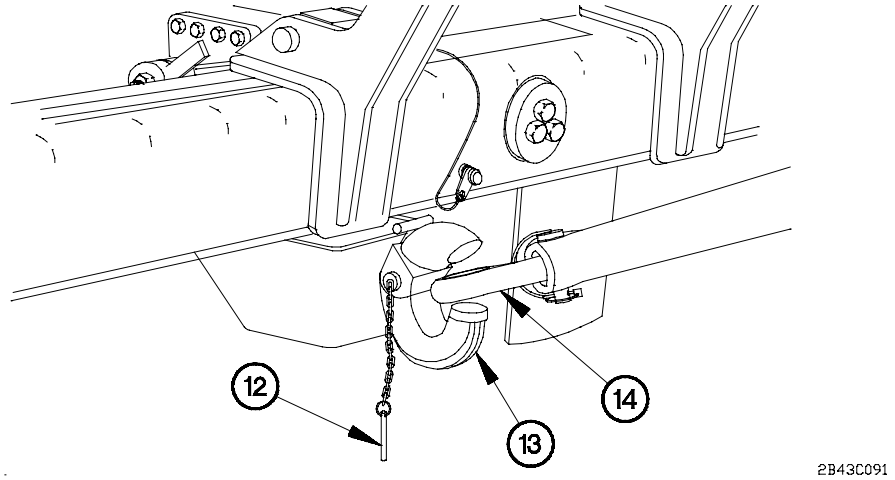

(16) Remove cotter pin (12) from towing pintle assembly (13).

(17) Open towing pintle assembly (13).

WARNING

- **Ground guide is required to guide vehicle backing up. Failure to comply may result in injury to personnel or damage to equipment.**
- **Do not place hands near towing pintle assembly when aligning lunette eye with towing pintle assembly or when removing towbar. Failure to comply may result in injury to personnel.**

NOTE

Steps (19) and (20) require the aid of an assistant.

(18) Slowly back up M1089 until towbar eye (14) is aligned with towing pintle assembly (13).

(19) Connect towbar eye (14) to towing pintle assembly (13).

(20) Close towing pintle assembly (13).

(21) Install cotter pin (12) in towing pintle assembly (13).

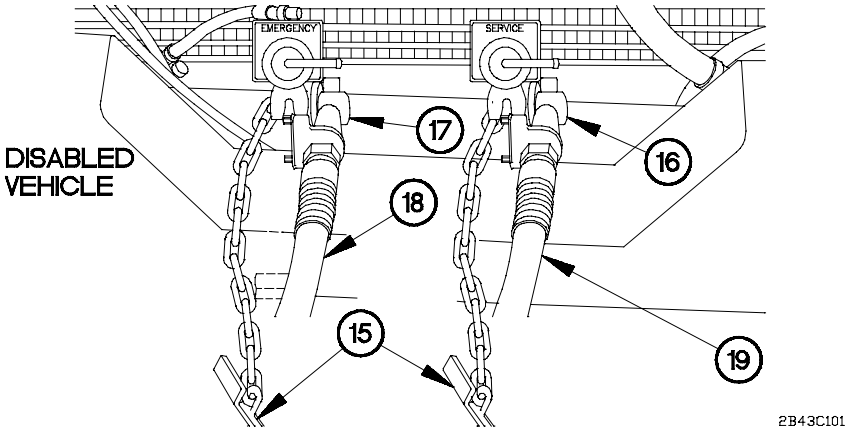

(22) Release parking brakes of disabled vehicle (refer to disabled vehicle Operator's manual).

(23) Remove two dummy couplings (15) from SERVICE gladhand (16) and EMERGENCY gladhand (17) on front of disabled vehicle.

(24) Connect intervehicular air hose (18) to EMERGENCY gladhand (17) of disabled vehicle.

(25) Connect intervehicular air hose (19) to SERVICE gladhand (16) of disabled vehicle.

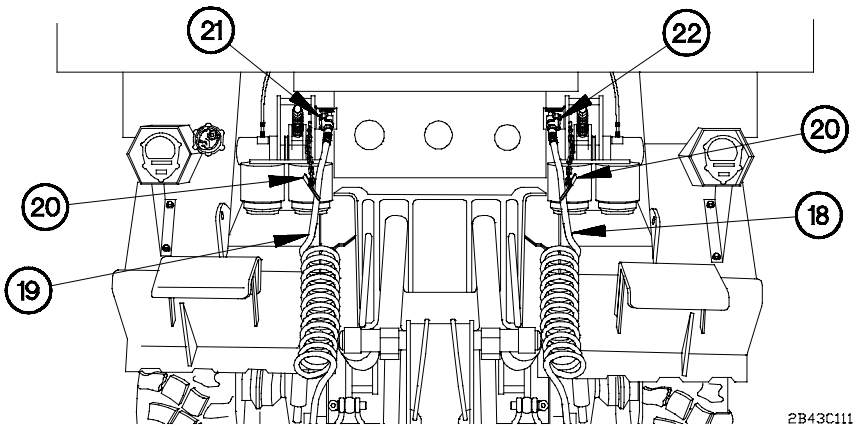

(26) Remove two dummy couplings (20) from SERVICE gladhand (21) and EMERGENCY gladhand (22) of M1089.

(27) Connect intervehicular air hose (18) to EMERGENCY gladhand (22).

(28) Connect intervehicular air hose (19) to SERVICE gladhand (21).

2-43. WRECKER FLAT TOWING (CONT)

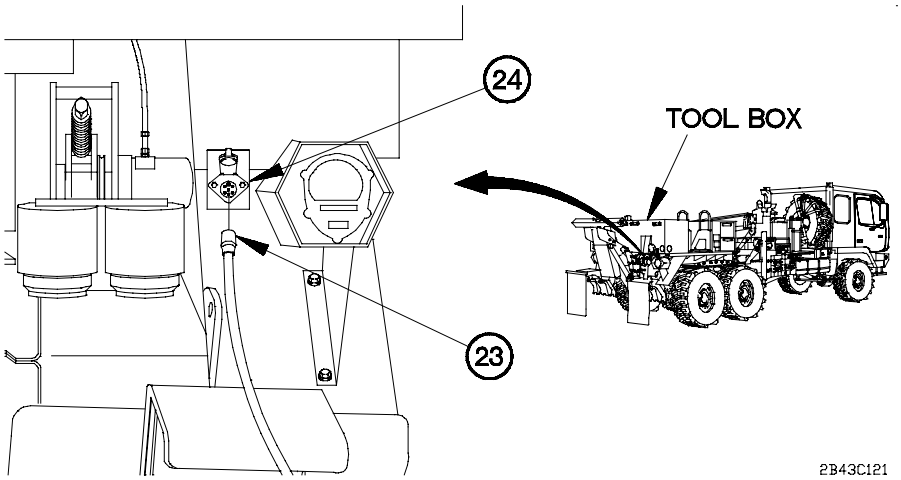

(29) Remove intervehicular cable (23) from tool box.

(30) Connect intervehicular cable (23) to receptacle (24) on M1089.

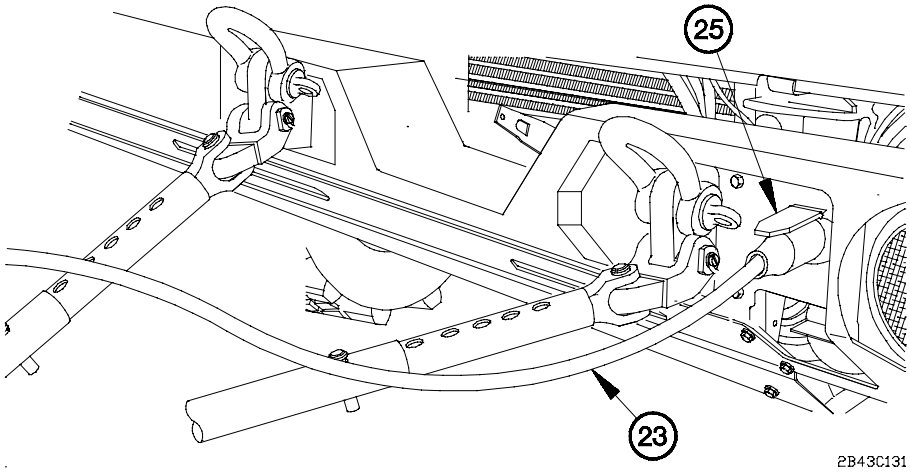

(31) Connect other end of intervehicular cable (23) to receptacle (25) on disabled vehicle.

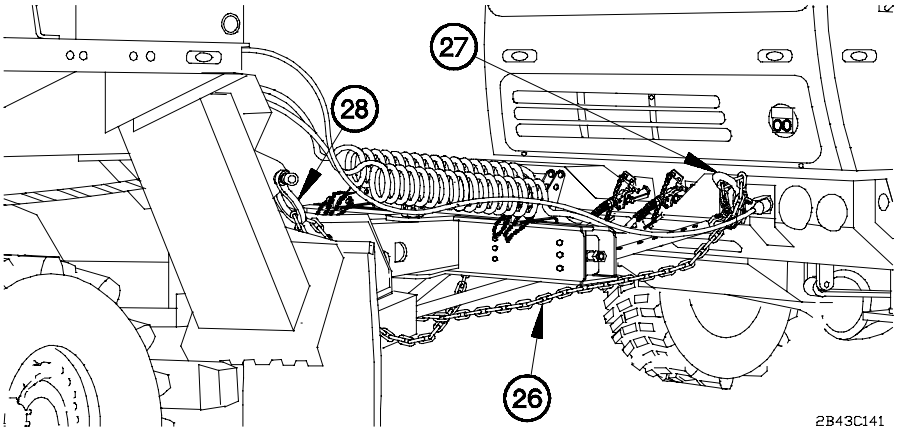

NOTE

Left and right side safety chains are installed the same way. Left side shown.

(32) Remove two safety chains (26) from tool box.

(33) Attach one safety chain (26) to shackle (27) on disabled vehicle and to shackle (28) on M1089.

d. Towbar Disconnection.

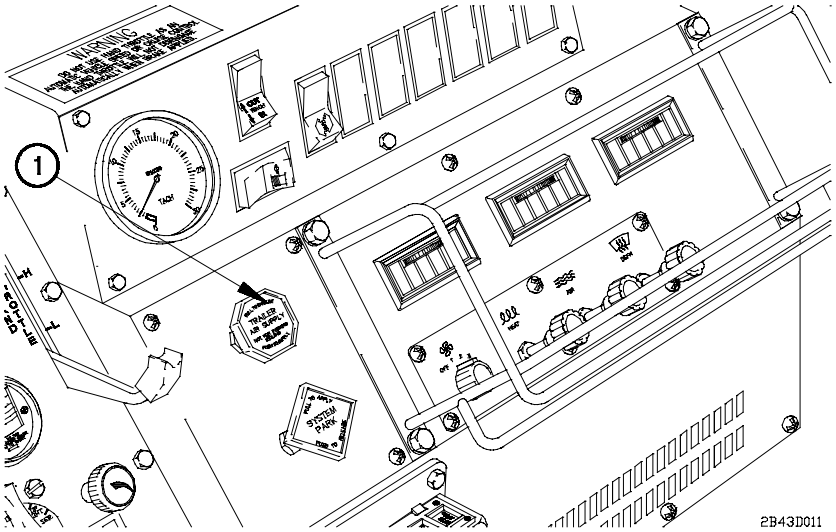

(1) Pull out TRAILER AIR SUPPLY control (1) on towing vehicle.

2-43. WRECKER FLAT TOWING (CONT)

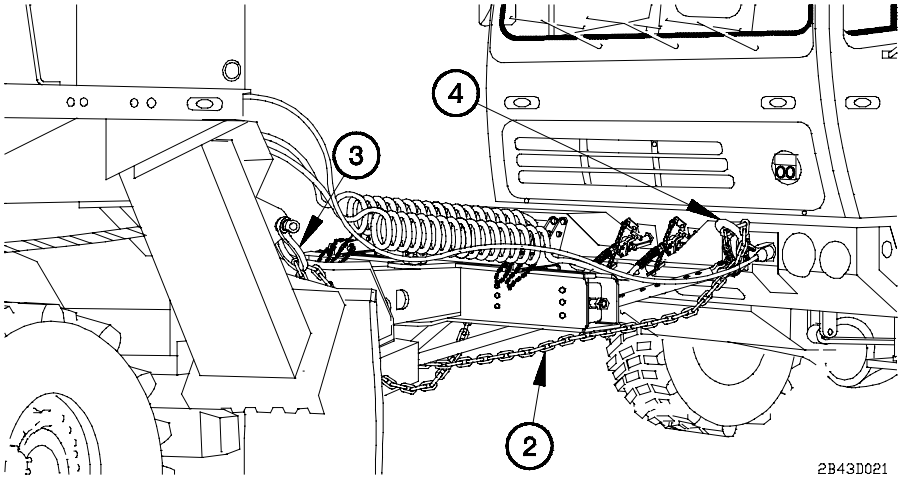

NOTE

Left and right side safety chains are removed the same way. Left side shown.

(2) Disconnect safety chains (2) from shackles (3) of M1089 and from shackles (4) on disabled vehicle.

(3) Stow two safety chains (2) in tool box.

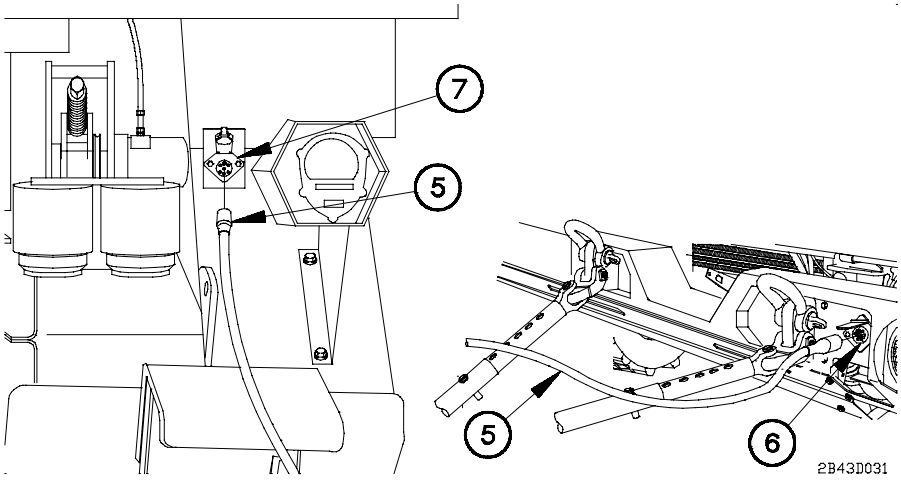

(4) Disconnect intervehicular cable (5) from receptacle (6) on disabled vehicle.

(5) Disconnect other end of intervehicular cable (5) from receptacle (7) on M1089.

(6) Stow intervehicular cable (5) in tool box.

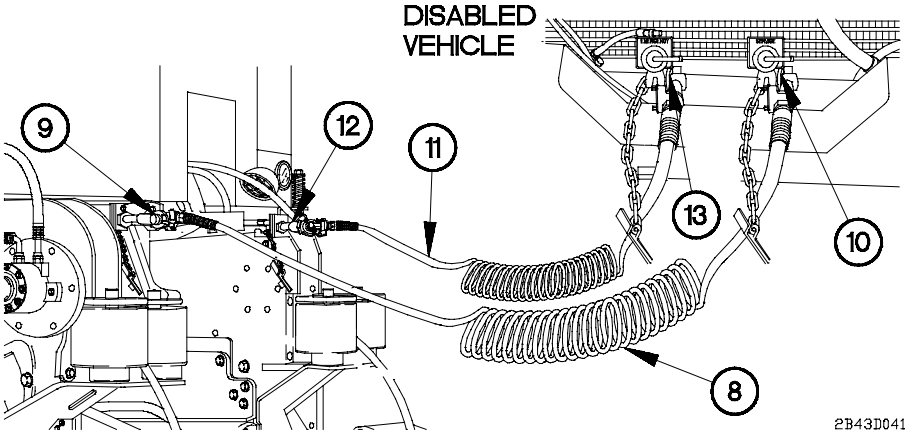

(7) Disconnect intervehicular air hose (8) from SERVICE gladhand (9) of M1089 and SERVICE gladhand (10) on disabled vehicle.

(8) Disconnect intervehicular air hose (11) from EMERGENCY gladhand (12) of M1089 and EMERGENCY gladhand (13) on disabled vehicle.

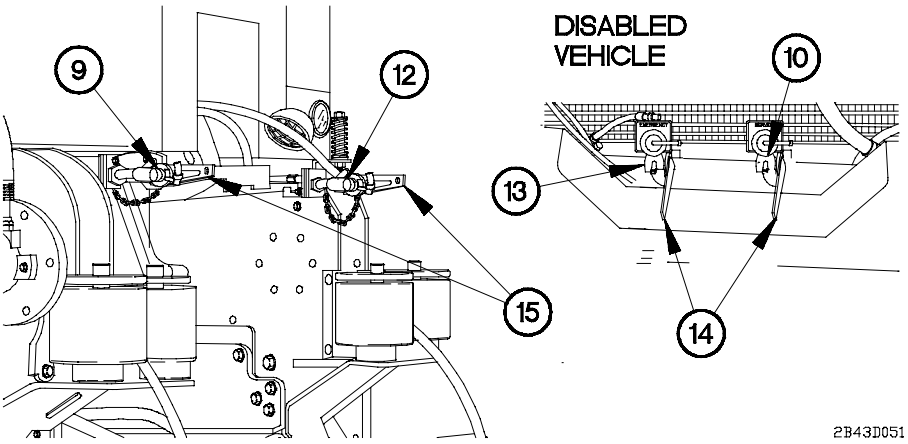

(9) Install dummy couplings (14) on gladhands (10 and 13) of disabled vehicle.

(10) Install dummy couplings (15) on gladhands (9 and 12) of M1089.

2-43. WRECKER FLAT TOWING (CONT)

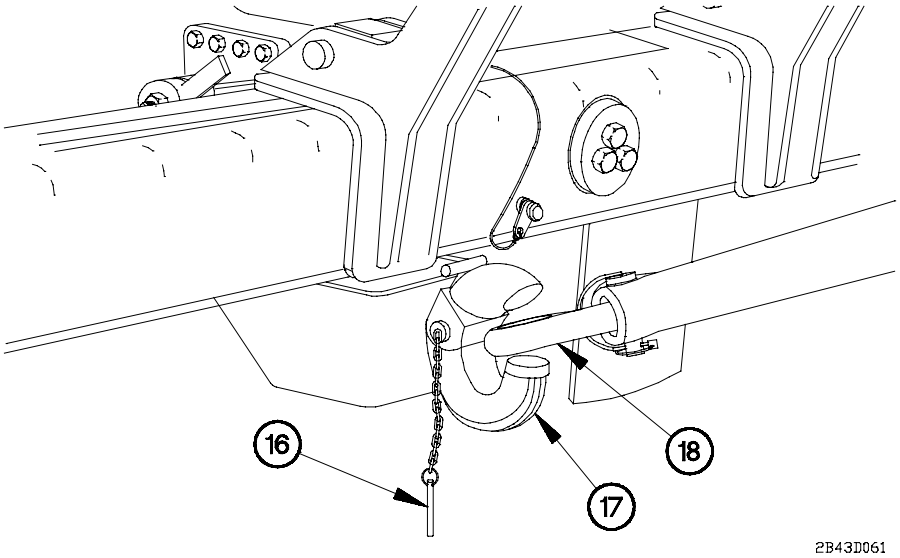

(11) Remove cotter pin (16) from towing pintle assembly (17).

(12) Open towing pintle assembly (17).

WARNING

Do not place hands near towing pintle assembly when removing towbar. Failure to comply may result in injury to personnel.

NOTE

Steps (13) and (14) require the aid of an assistant.

(13) Remove towbar (18) from towing pintle assembly (17).

(14) Drive M1089 forward. When M1089 is clear, lower towbar (18) to ground.

(15) Close towing pintle assembly (17).

(16) Install cotter pin (16) in towing pintle assembly (17).

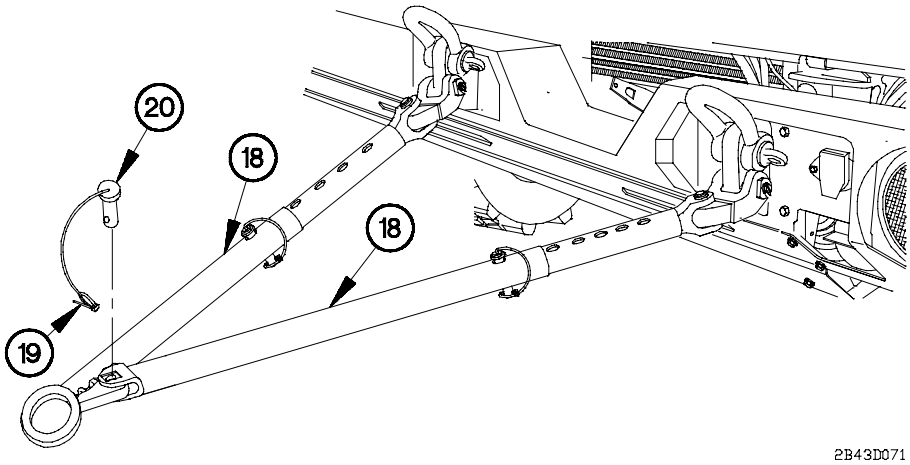

(17) Remove lynch pin (19) and pin (20) from towbar (18).

(18) Separate left and right sides of towbar (18).

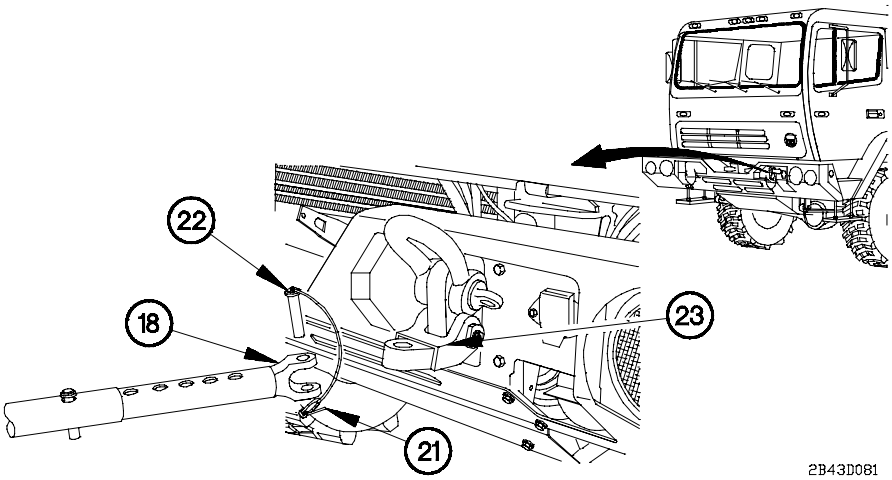

NOTE

- Left and right sides of towbar are removed the same way. Left side shown.
- Step (19) requires the aid of an assistant.

(19) Remove lynch pin (21), pin (22), and towbar (18) from towbar adapter (23).

2-43. WRECKER FLAT TOWING (CONT)

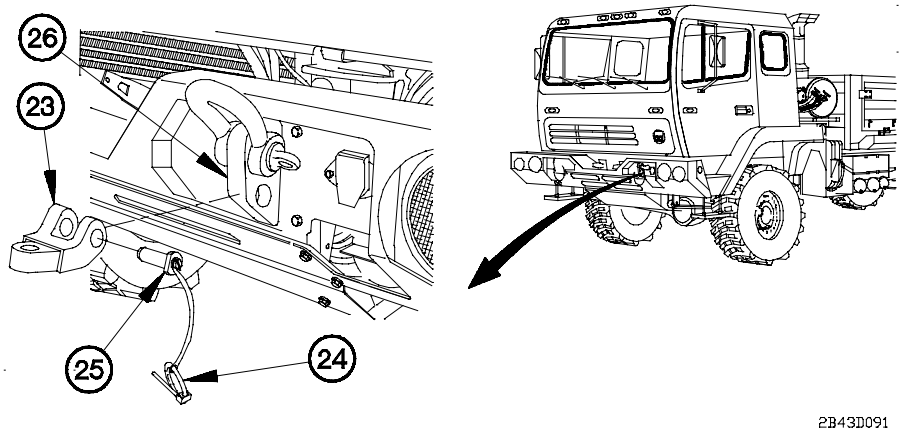

NOTE

Left and right side towbar adapters are removed the same way. Left side shown.

(20) Remove lynch pin (24), pin (25), and towbar adapter (23) from tow eye (26).

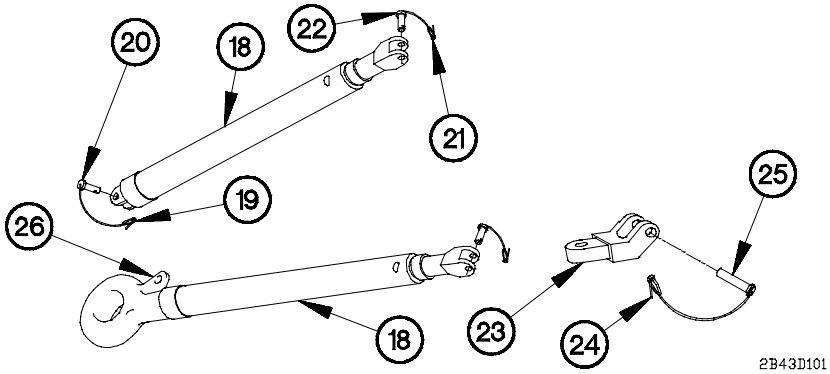

(21) Install pin (25) and lynch pin (24) in towbar adapter (23).

(22) Install towbar adapter (23) on towbar (18) with pin (22) and lynch pin (21).

(23) Perform steps (21) and (22) for right side of towbar (18).

(24) Align left and right sides of towbar (18) at pivot point (26).

(25) Install pin (20) and lynch pin (19) in towbar (18).

e. Towing Pintle Assembly Removal.

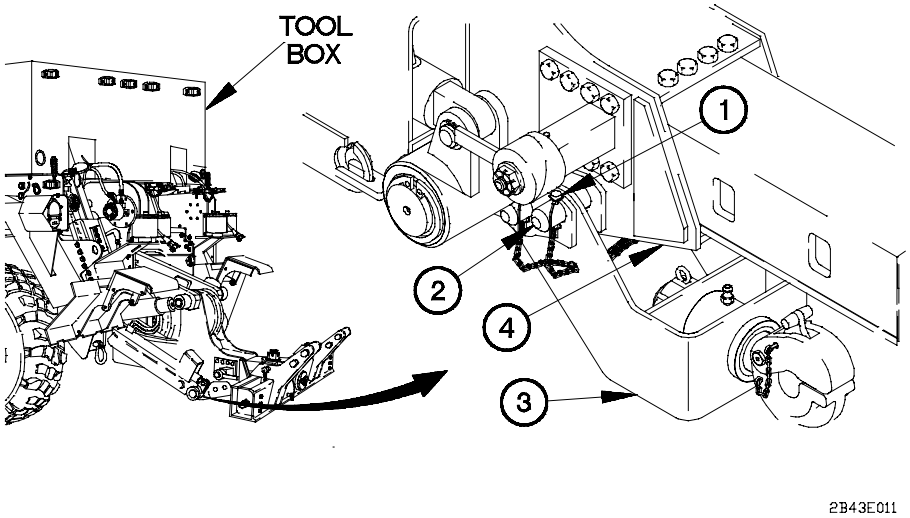

(1) Remove two pin locks (1) from each pin (2).

(2) Remove two pins (2) and towing pintle assembly (3) from boom frame (4).

(3) Stow two pins (2), four lock pins (1) and towing pintle assembly (3) in tool box.

2-44. M1089 UNDERLIFT ASSEMBLY OPERATION

a. Prepare Underlift Assembly for Operation.

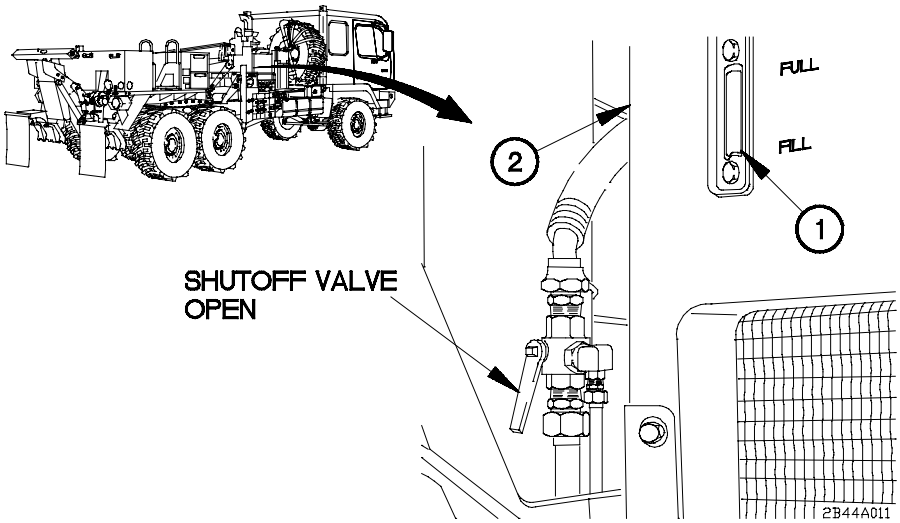

(1) Check sight gage (1) on hydraulic tank (2).

(2) Add oil to bring to FULL mark as required (Appendix F).

2-44. M1089 UNDERLIFT ASSEMBLY OPERATION (CONT)

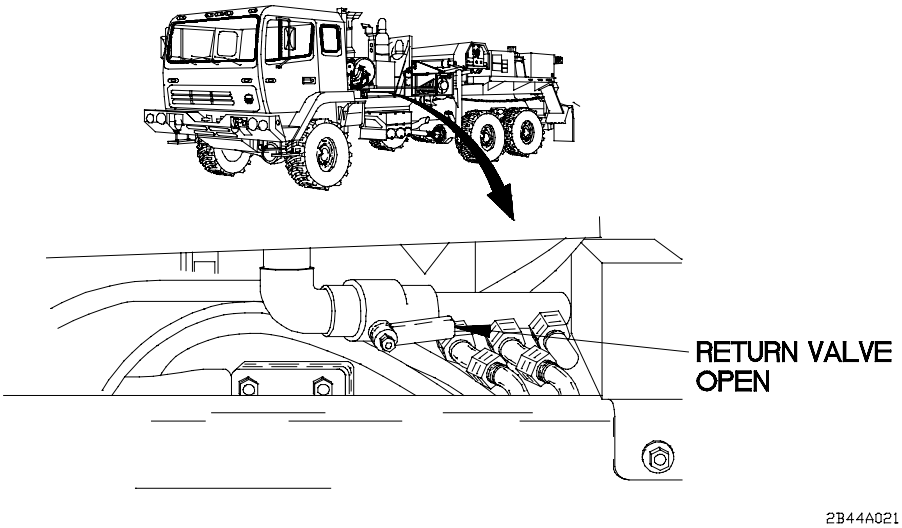

CAUTION

Ensure hydraulic shutoff valve and return valve are open and hydraulic tank is full. Failure to comply may result in damage to equipment.

(3) Start engine (para 2-27a or b).

(4) Turn on amber warning light (para 2-27c).

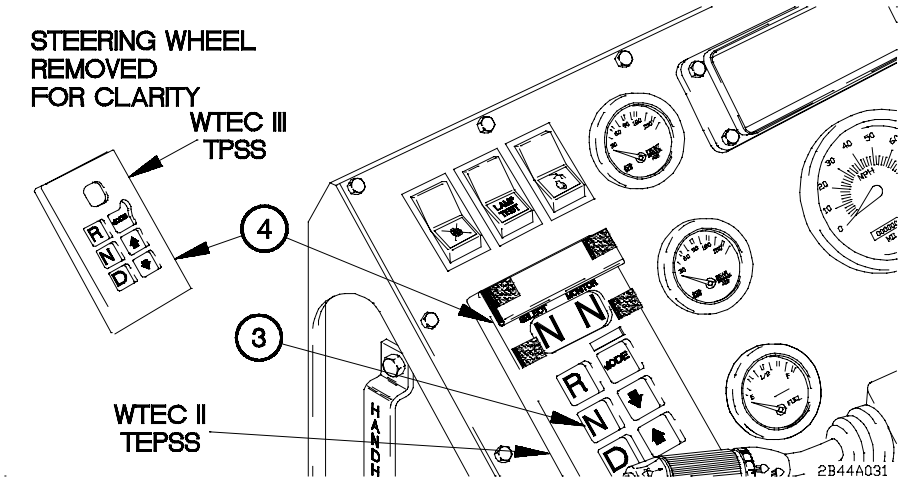

(5) Align underlift assembly with front or rear of disabled vehicle.

(6) Press N (Neutral) button (3) on WTEC II TEPSS (4) or WTEC III TPSS (4).

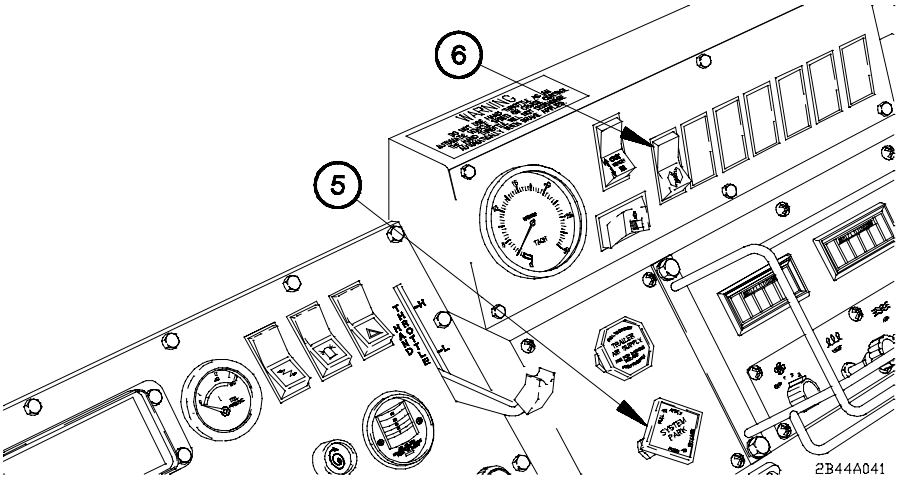

(7) Pull out SYSTEM PARK control (5).

(8) Position PTO switch (6) to on.

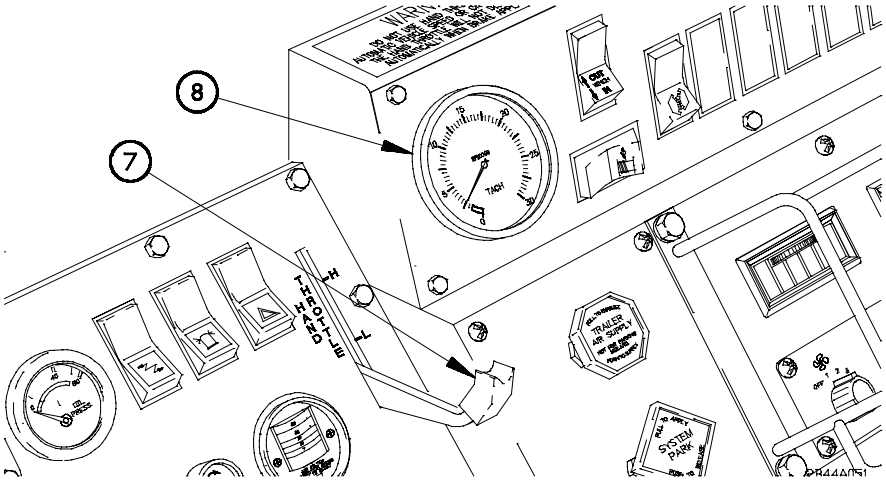

CAUTION

Keep tachometer within 1,250-1,450 rpm when Power Take-Off (PTO) is engaged. Failure to comply may result in damage to equipment.

NOTE

In the event of a tachometer failure a HAND THROTTLE lever positioned to L is approximately 1,250-1,450 rpm.

(9) Set engine speed by increasing HAND THROTTLE lever (7) until tachometer (8) reads 1,250-1,450 rpm.

2-44. M1089 UNDERLIFT ASSEMBLY OPERATION (CONT)

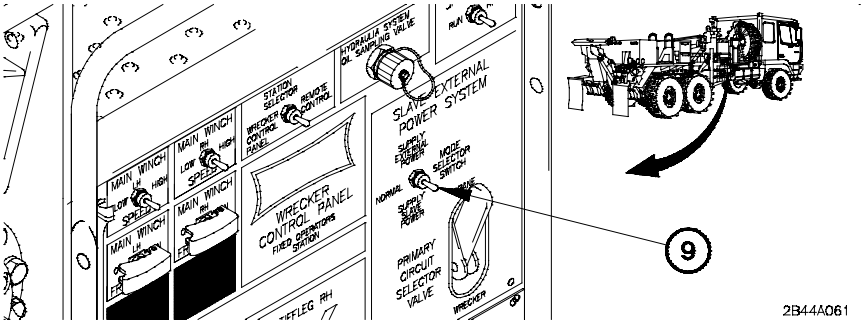

WARNING

Goggles must be worn while operating wrecker control panel. Blowing dust and debris may become airborne while engine is running. Failure to comply may result in injury to personnel.

(10) Position MODE SELECTOR SWITCH (9) to NORMAL.

b. Connect Wrecker REMOTE CONTROL.

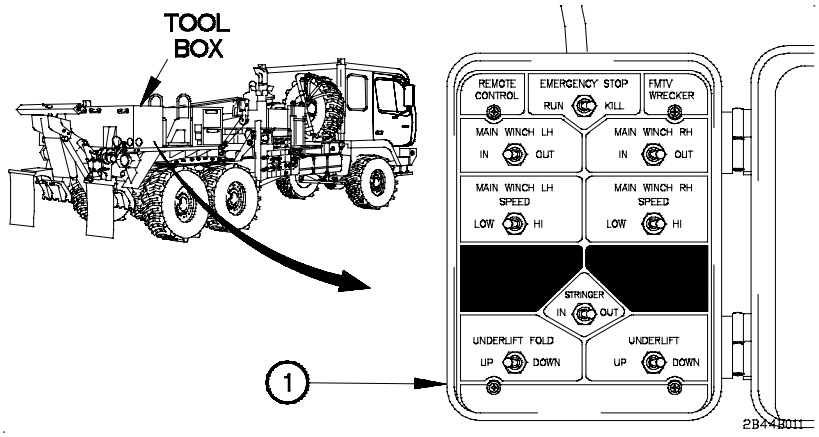

WARNING

Underlift assembly must be operated with REMOTE CONTROL if Operator is not able to keep underlift assembly and disabled vehicle in sight at all times during operation. Failure to comply may result in serious injury or death to personnel or damage to equipment.

(1) Remove wrecker REMOTE CONTROL (1) from tool box.

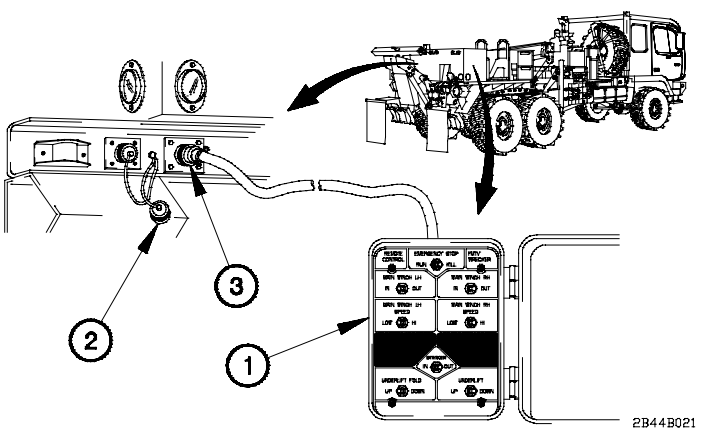

NOTE

Wrecker REMOTE CONTROL may be connected on either side of the vehicle. Right side connection shown.

(2) Remove dust cap (2) from receptacle (3).

(3) Connect wrecker REMOTE CONTROL (1) to receptacle (3).

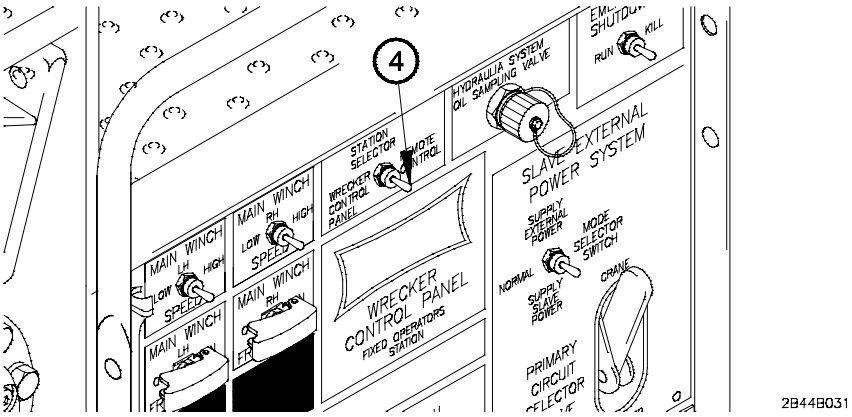

NOTE

Wrecker remote control switches operate the same as levers on WRECKER CONTROL PANEL. For example; where procedure calls f or STINGER lever to be positioned to IN, position STINGER IN/OUT switch on wrecker remote control to IN.

(4) Position STATION SELECTOR switch (4) to REMOTE CONTROL.

(5) Lower underlift assembly (para 2-44d).

2-44. M1089 UNDERLIFT ASSEMBLY OPERATION (CONT)

c. Disconnect Remote Control.

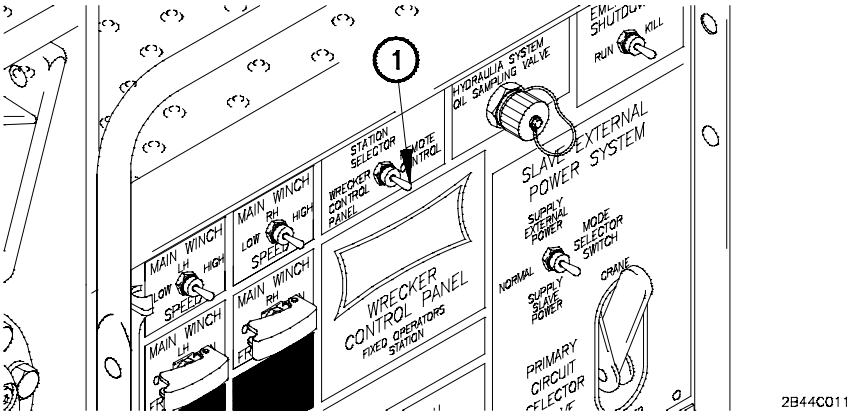

(1) Position STATION SELECTOR switch (1) to WRECKER CONTROL PANEL.

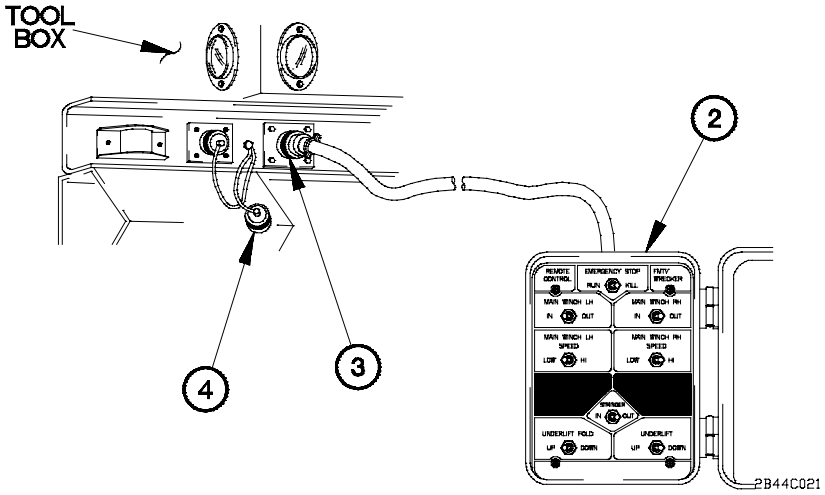

NOTE

Wrecker REMOTE CONTROL may be connected on either side of the vehicle. Right side disconnection shown.

(2) Disconnect wrecker REMOTE CONTROL (2) from receptacle (3).

(3) Install dust cap (4) on receptacle (3).

(4) Stow wrecker REMOTE CONTROL (2) in tool box.

d. Lower Underlift Assembly.

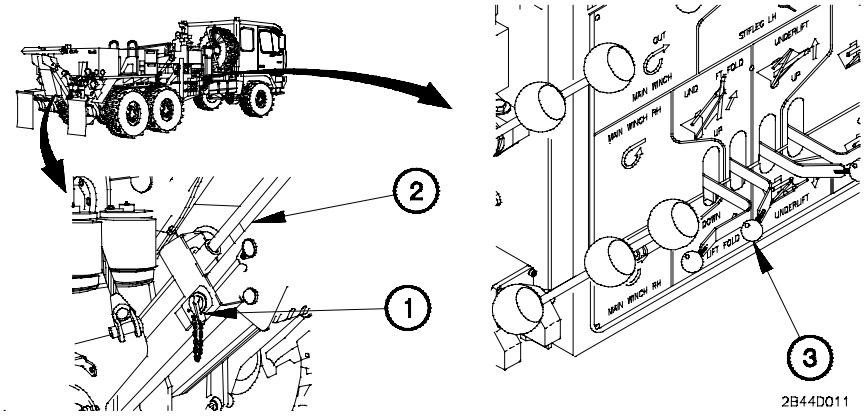

(1) Remove underlift assembly lock pin (1) from boom frame (2).

(2) Position UNDERLIFT FOLD lever (3) to DOWN until boom frame (2) is fully unfolded.

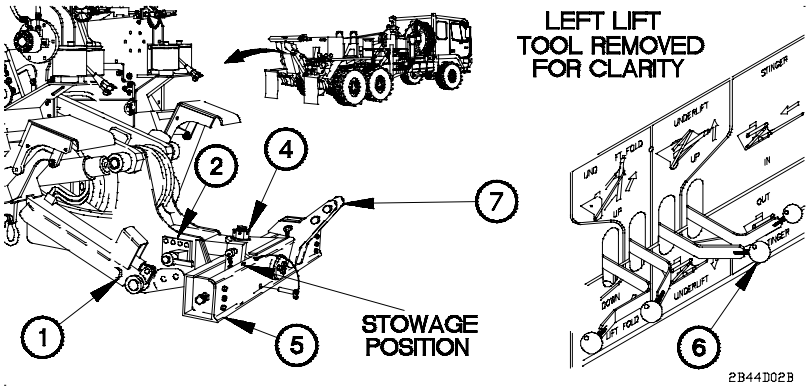

CAUTION

Ensure underlift assembly lock pin is installed when underlift assembly is fully unfolded. Failure to comply may result in damage to equipment.

(3) Install underlift assembly lock pin (1) in boom frame (2).

(4) Position wrecker so that centerline of disabled vehicle is in line with nut (4) on crossbar (5).

(5) Position UNDERLIFT lever (6) to DOWN until lift tool (7) are aligned with tow eyes on disabled vehicle.

2-44. M1089 UNDERLIFT ASSEMBLY OPERATION (CONT)

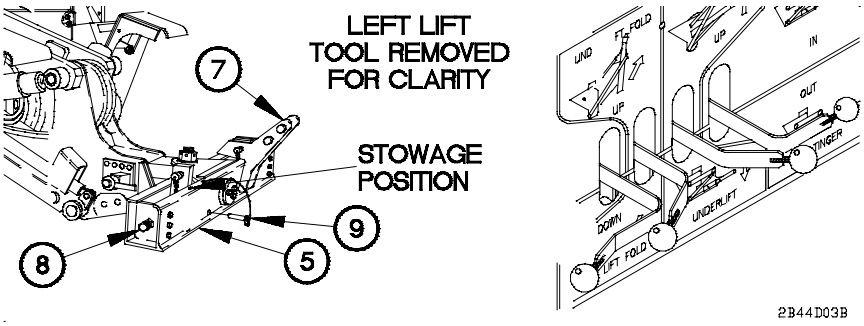

(6) Turn nut (8) to the left to move lift tool (7) closer together.

(7) Turn nut (8) to the right to move lift tool (7) further apart.

(8) Remove crossbar lockpin (9) from crossbar (5).

(9) Install crossbar lockpin (9) in stowage location.

(10) Connect disabled vehicle to underlift assembly (para 2-45 through 2-49).

e. Raise Underlift Assembly.

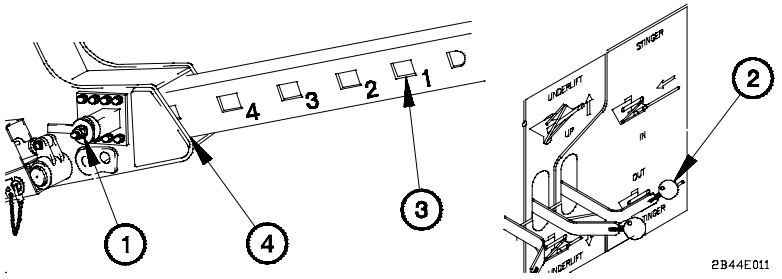

NOTE

Perform steps (1) through (3) only if stinger cam lock is not locked in first rectangular hole on stinger.

(1) Unlock stinger cam lock (1).

(2) Position STINGER lever (2) to IN until stinger cam lock (1) is aligned with first hole (3) in stinger (4).

(3) Lock stinger cam lock (1).

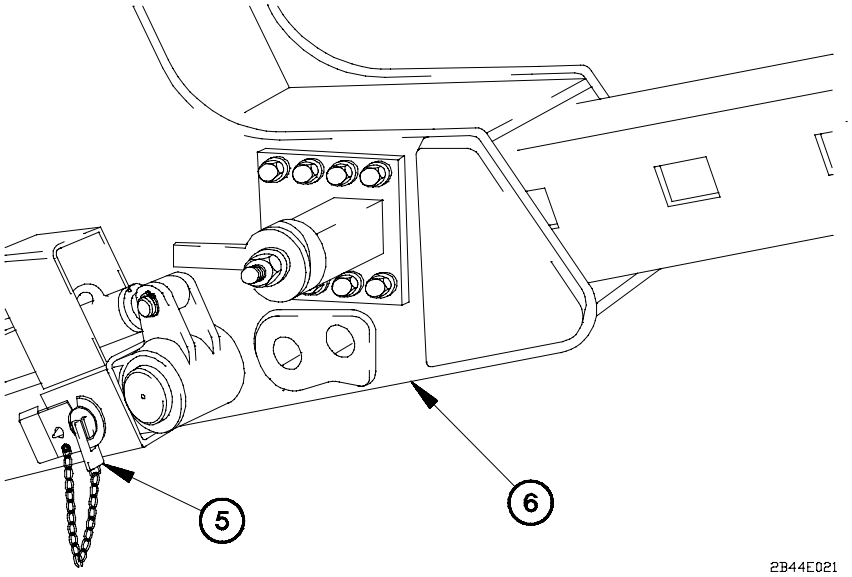

(4) Remove underlift assembly lock pin (5) from boom frame (6).

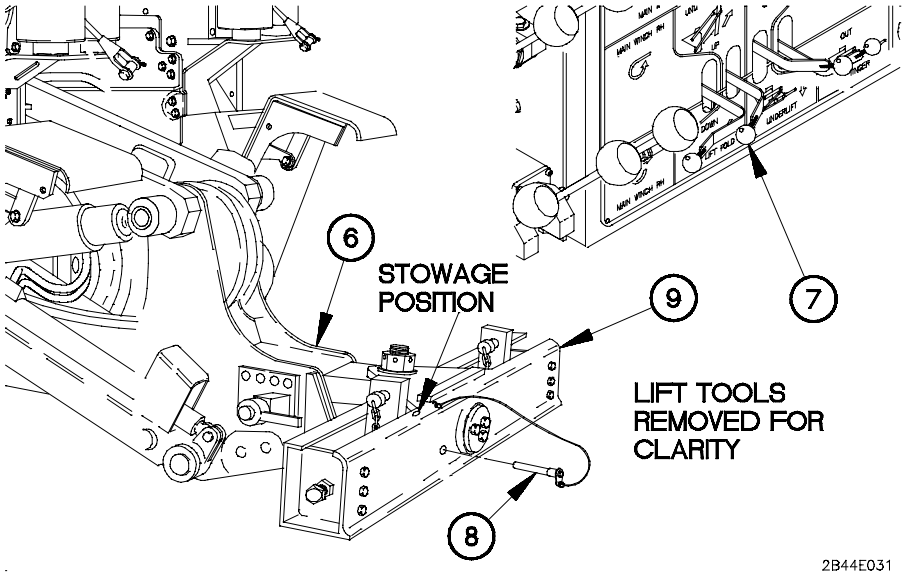

(5) Position UNDERLIFT FOLD lever (7) to UP until boom frame (6) is fully folded.

(6) Remove crossbar lockpin (8) from stowage position.

(7) Install crossbar lockpin (8) in crossbar (9).

2-44. M1089 UNDERLIFT ASSEMBLY OPERATION (CONT)

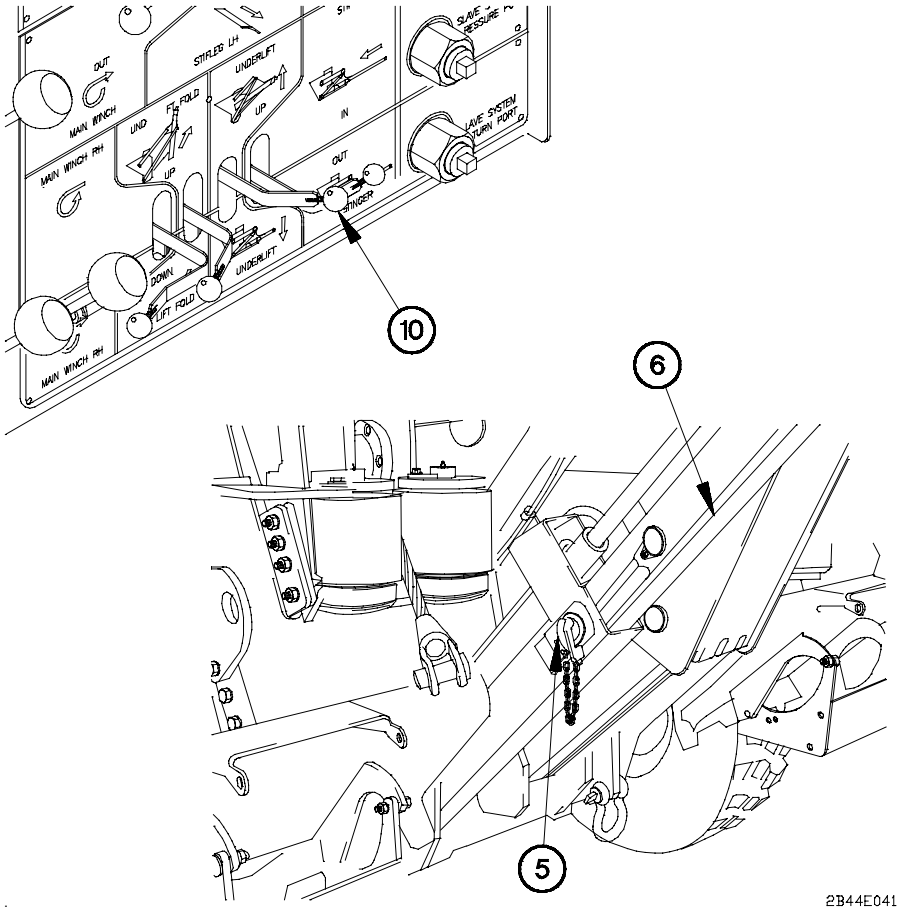

CAUTION

Ensure underlift assembly lock pin is securely installed when underlift assembly is fully folded. Failure to comply may result in damage to equipment.

(8) Install underlift assembly lock pin (5) in boom frame (6).

(9) Position UNDERLIFT lever (10) to UP until boom frame (6) is fully raised.

2-45. M998 SERIES TOWING CONNECTION/DISCONNECTION

a. Front Connection.

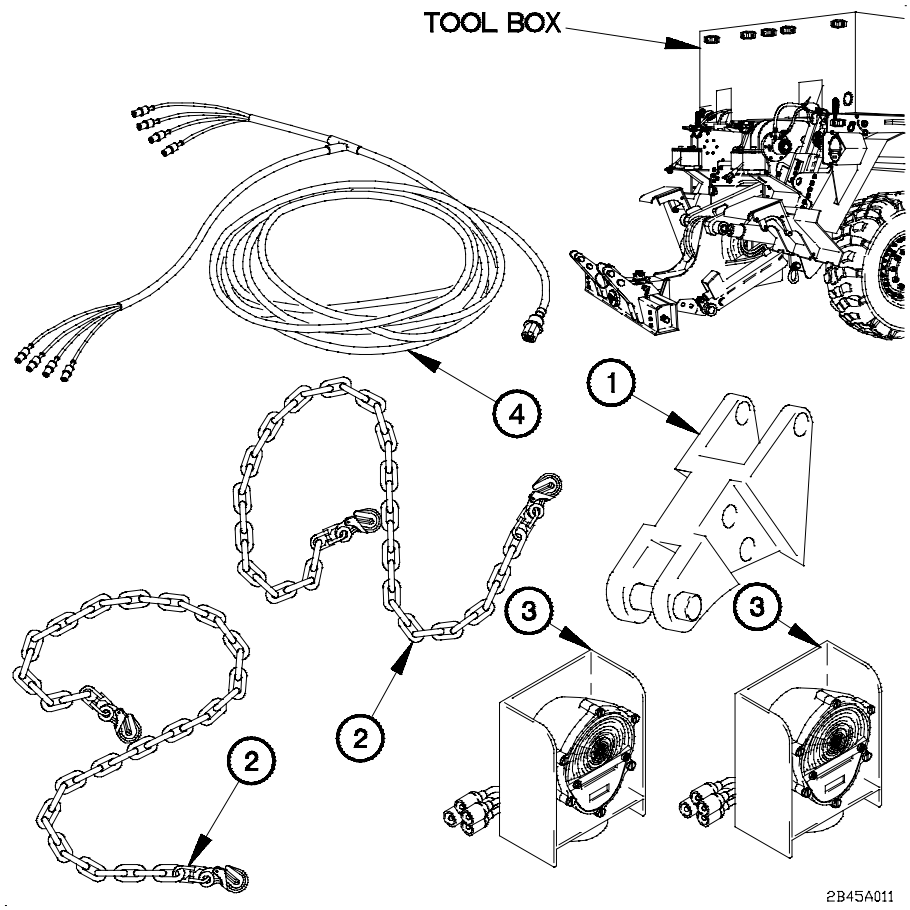

(1) Remove two top bumper lift tools (1), chains (2), emergency tow lights (3), and tow lights cable (4) from tool box.

(2) Prepare underlift assembly for operation (para 2-44a).

NOTE

Perform step 3 if assistant is not available to aid in towing connection.

(3) Connect WRECKER REMOTE CONTROL (para 2-44b).

2-45. M998 SERIES TOWING CONNECTION/DISCONNECTION (CONT)

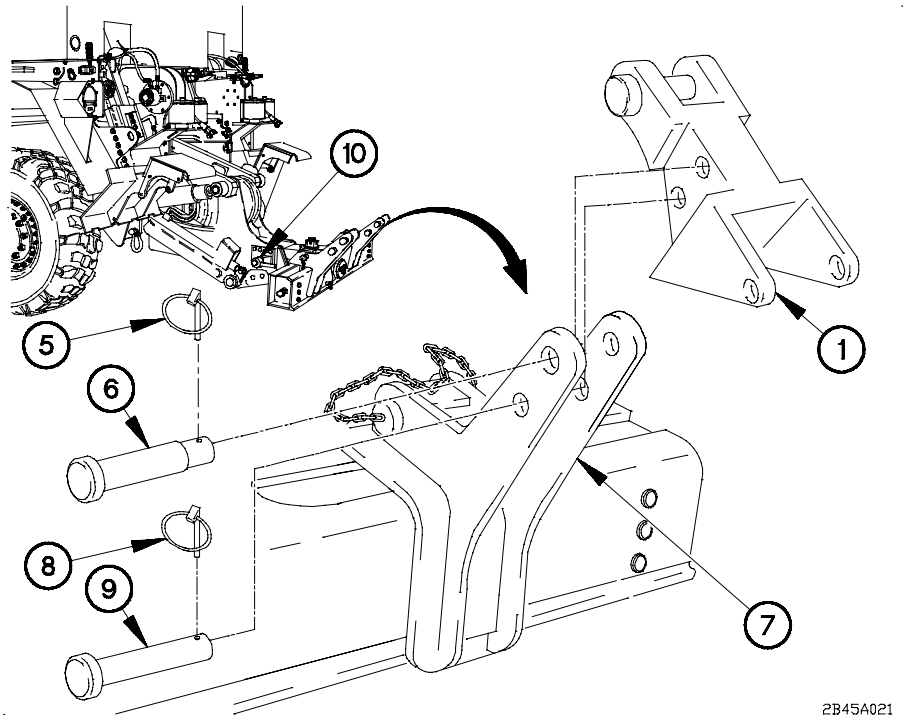

(4) Remove two lynch pins (5) and large pins (6) from lift tools (7).

(5) Remove two lynch pins (8) and small pins (9) from lift tools (7).

NOTE

- Top bumper lift tools are installed with small pin hole facing toward rear of crossbar.
- Left and right side top lift tools are installed the same way. Right side shown.

(6) Install two top bumper lift tools (1) on lift tools (7) with large pins (6) and lynch pins (5).

(7) Install small pins (9) and lynch pins (8) in two top bumper lift tools (1).

(8) Unlock stinger cam lock (10).

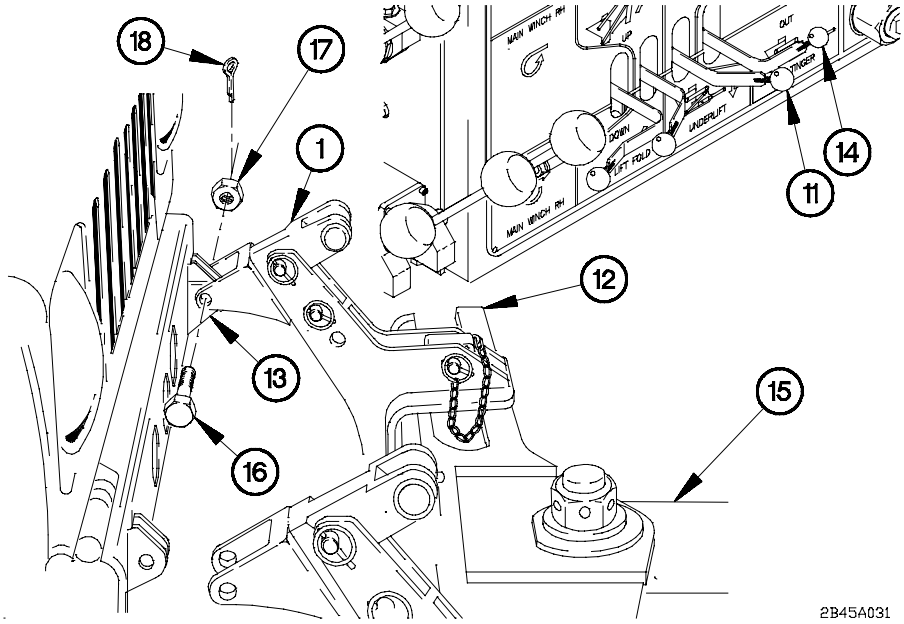

(9) Remove two shackles from M998 tow eyes (TM 9-2320-280-10).

WARNING

Goggles must be worn while operating wrecker control panel. Blowing dust and debris may become airborne while engine is running. Failure to comply may result in injury to personnel.

(10) Place UNDERLIFT lever (11) in UP position to raise crossbar (12) until two top bumper lift tools (1) are aligned with M998 tow eyes (13).

(11) Place STINGER lever (14) in OUT position to extend stinger (15) until two top bumper lift tools (1) are aligned with M998 tow eyes (13).

NOTE

- Left and right side top bumper lift tools are installed on M998 tow eyes the same way. Left side shown.
- Top bumper lift tools are attached to M998 tow eyes with bolts, nuts and cotter pins removed with M998 shackles.

(12) Install two top bumper lift tools (1) on two M998 tow eyes (13) with two bolts (16), nuts (17), and cotter pins (18).

2-45. M998 SERIES TOWING CONNECTION/DISCONNECTION (CONT)

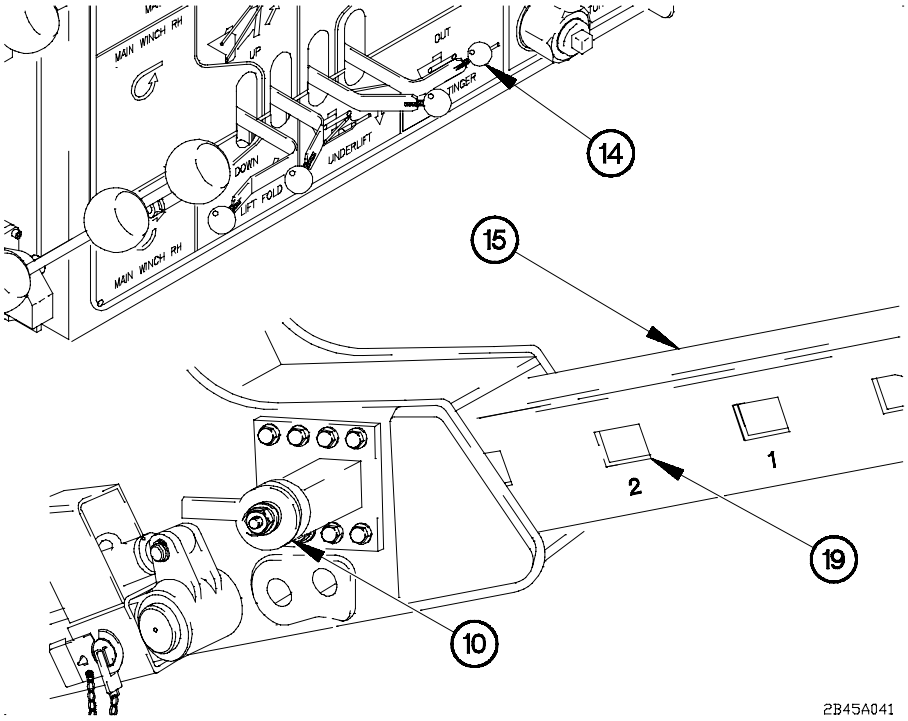

CAUTION

- Stinger cam lock is normally locked in second rectangular hole on stinger when towing an M998. It may be necessary to lock stinger cam lock in third rectangular hole on stinger if winches or other components mounted on front of M998 interfere with movement of crossbar. Lock stinger cam lock in hole which will allow crossbar to rotate freely. Failure to comply may result in damage to equipment.

- It may be necessary to start with holes 4 or 5 on stinger when recovering a vehicle on uneven ground. Once level ground is reached, lock stinger in second hole. Failure to comply may result in damage to equipment.

(13) Place STINGER lever (14) to IN position to retract stinger (15) until desired stinger cam lock hole (19) is aligned.

(14) Lock stinger cam lock (10).

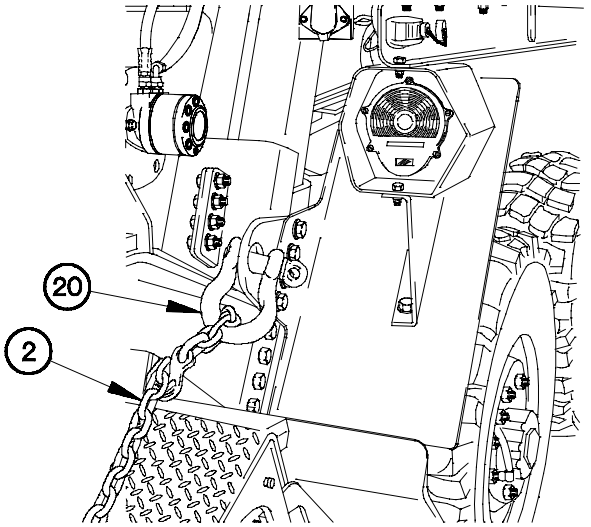

NOTE

Left and right side chains are connected the same way. Right side shown.

(15) Connect one end of two chains (2) to M1089 rear shackles (20).

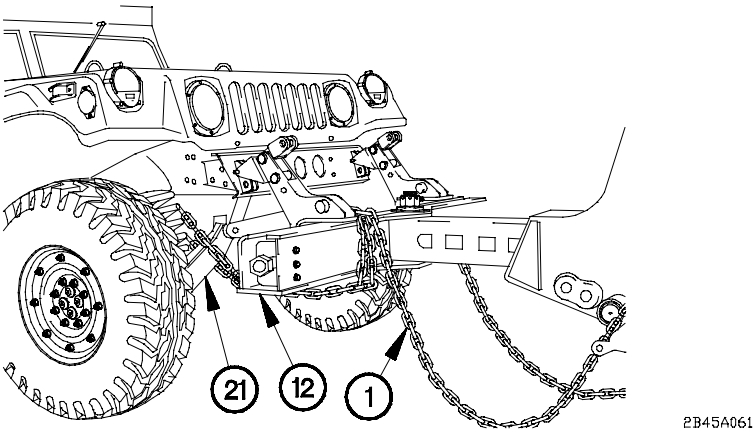

NOTE

Wrap chains around crossbar so that chains are approximately 6-10 in. (15-25 cm) above ground.

(16) Wrap two chains (1) around crossbar (12).

(17) Connect other end of two chains (1) to front arm of M998 A-frames (21).

2-45. M998 SERIES TOWING CONNECTION/DISCONNECTION (CONT)

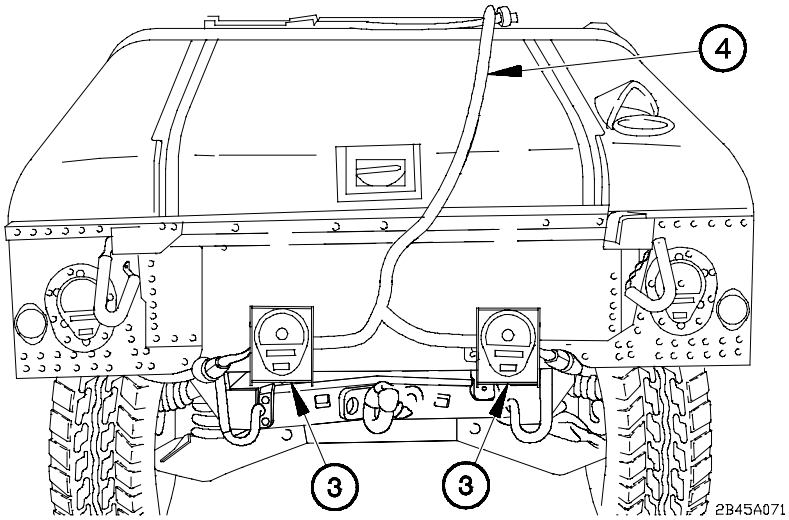

(18) Position two emergency tow lights (3) on rear of M998.

(19) Connect tow lights cable (4) to two emergency tow lights (3).

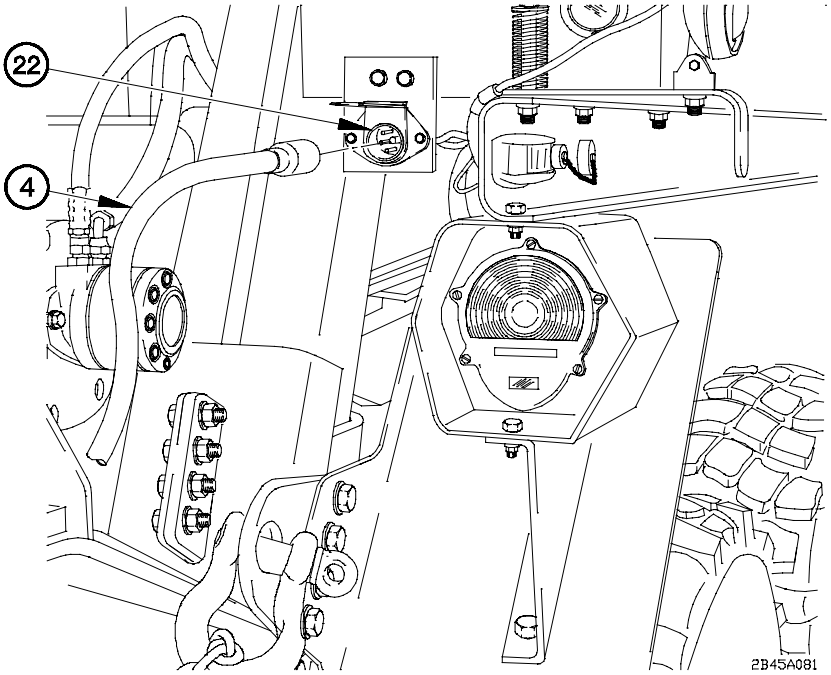

(20) Route end of tow lights cable (4) along top of M998.

(21) Connect tow lights cable (4) to M1089 rear electrical connector (22).

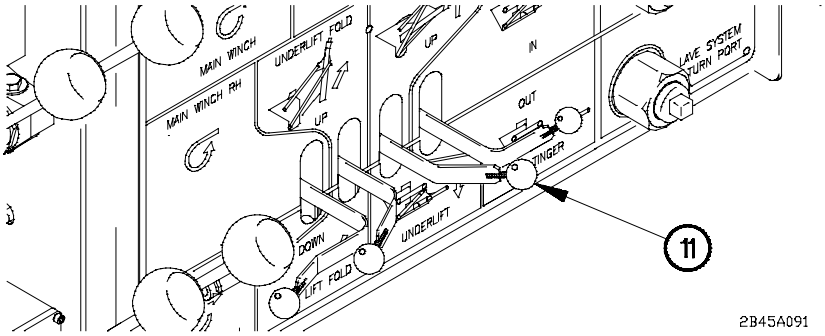

CAUTION

All loose equipment must be secure on M998. Failure to comply may result in damage to equipment.

(22) Prepare M998 for towing (TM 9-2320-280-10).

WARNING

Keep personnel clear of underlift assembly and disabled vehicle when raising. Disabled vehicle could fall suddenly. Failure to comply may result in serious injury or death to personnel.

(23) Place UNDERLIFT lever (11) in UP position to raise M998 until wheels are approximately 16 in. (41 cm) off ground.

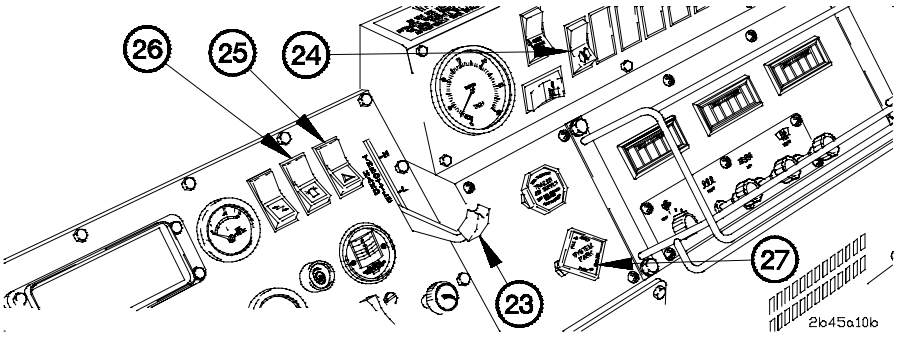

(24) Disconnect WRECKER REMOTE CONTROL (para 2-44c).

(25) Set engine speed to idle (750 rpm) by decreasing HAND THROTTLE lever (23) to full down position.

(26) Position PTO switch (24) to off.

(27) Install and raise two amber warning lights (para 2-74).

2-45. M998 SERIES TOWING CONNECTION/DISCONNECTION (CONT)

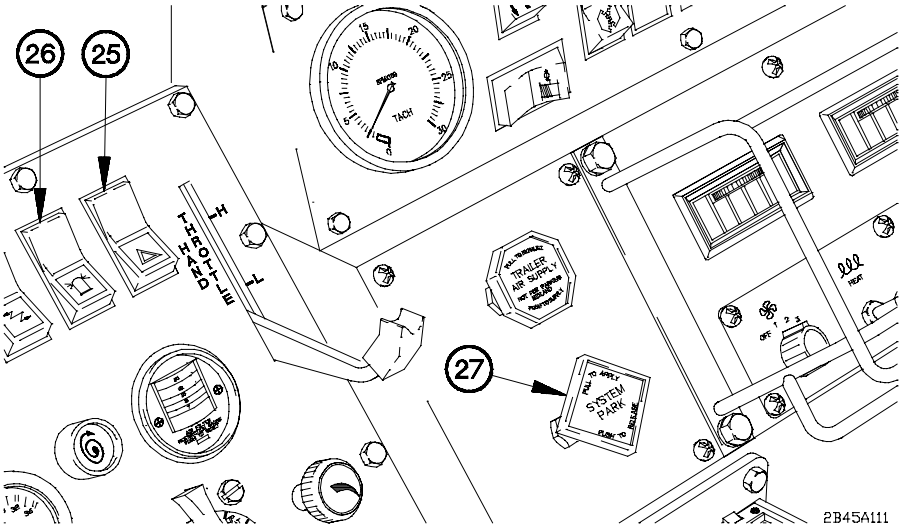

(28) Turn on service drive lights (para 2-27c).

(29) Position hazard lights switch (25) to on.

(30) Position amber warning lights switch (26) to on.

(31) Push in SYSTEM PARK control (27).

(32) Set transmission in gear (para 2-27e).

WARNING

M1089 should not be operated at speeds over 15 mph (24 km/h) except on paved roads when Operator determines that vehicle being towed and terrain allow safe operation. The following are maximum speeds for safe operation. Exceeding these speeds may result in loss of vehicle control.

TERRAIN CONDITION	MAXIMUM SPEED
on road (level)	35 mph (56 km/h)
on road (hilly)	30 mph (48 km/h)
off road	15 mph (24 km/h)

Failure to comply may result in serious injury or death to personnel or damage to equipment.

(33) Transport M998.

b. Front Disconnection.

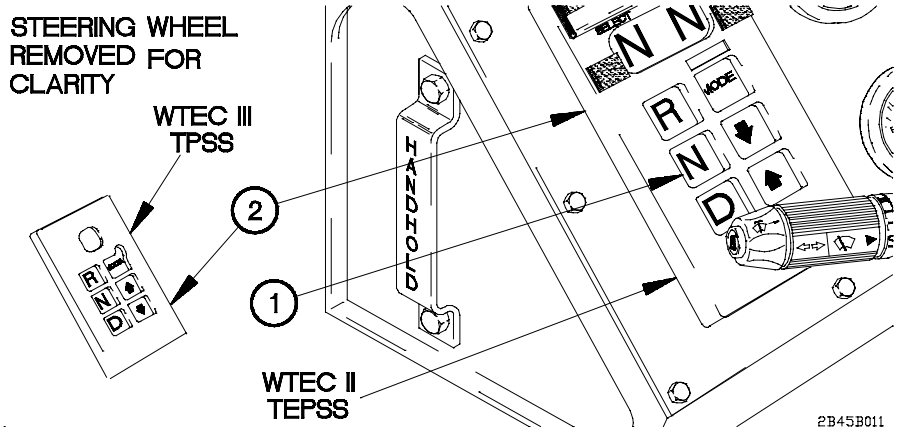

(1) Start engine (para 2-27a or b).

(2) Press N (Neutral) button (1) on WTEC II TEPSS (2) or WTEC III TPSS (2).

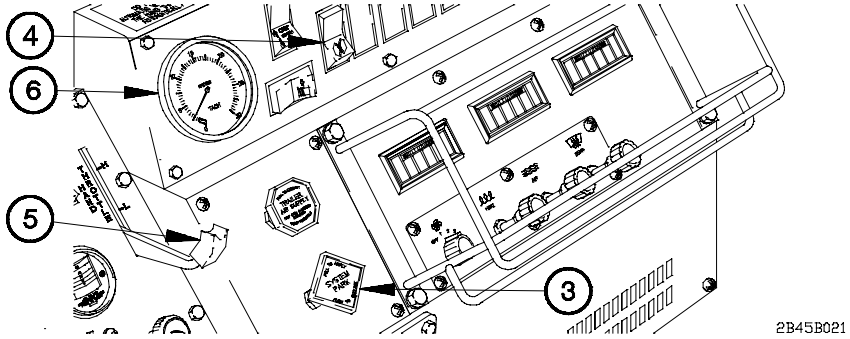

(3) Pull out SYSTEM PARK control (3).

(4) Position PTO switch (4) to on.

CAUTION

Keep tachometer within 1,250-1,450 rpm when Power Take-Off (PTO) is engaged. Failure to comply may result in damage to equipment.

NOTE

In the event of a tachometer failure a HAND THROTTLE lever positioned to L is approximately 1,250-1,450 rpm.

(5) Set engine speed by increasing HAND THROTTLE lever (5) until tachometer (6) reads 1,250-1,450 rpm.

2-45. M998 SERIES TOWING CONNECTION/DISCONNECTION (CONT)

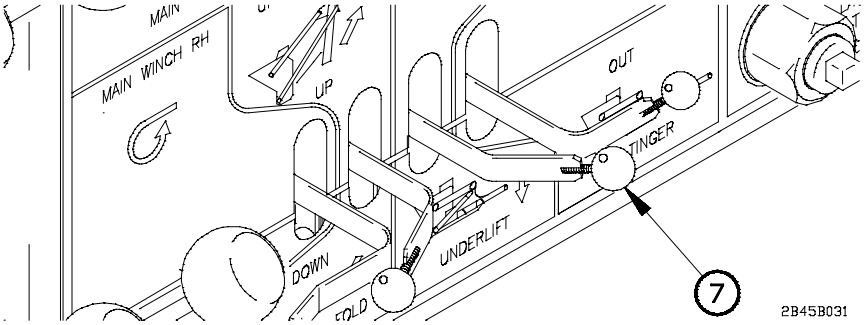

NOTE

Perform step 6 if assistant is not available to aid in towing connection.

(6) Connect WRECKER REMOTE CONTROL (para 2-44b).

WARNING

- **Keep personnel clear of underlift assembly and disabled vehicle when raising. Disabled vehicle could fall suddenly. Failure to comply may result in serious injury or death to personnel.**
- **Goggles must be worn while operating wrecker control panel. Blowing dust and debris may become airborne while engine is running. Failure to comply may result in injury to personnel.**

(7) Place UNDERLIFT lever (7) in DOWN position to lower M998 until wheels are in firm contact with ground.

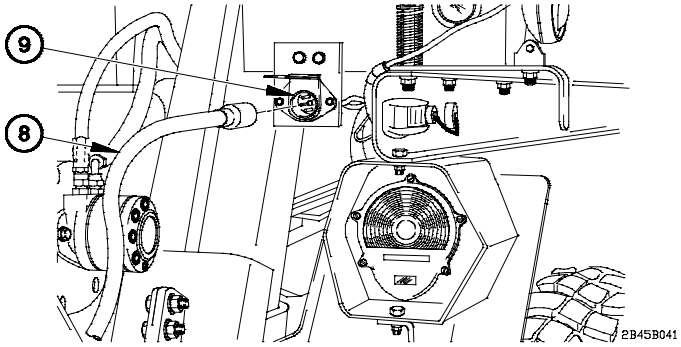

(8) Set parking brake on M998 (TM 9-2320-280-10).

(9) Disconnect tow lights cable (8) from M1089 rear electrical connector (9).

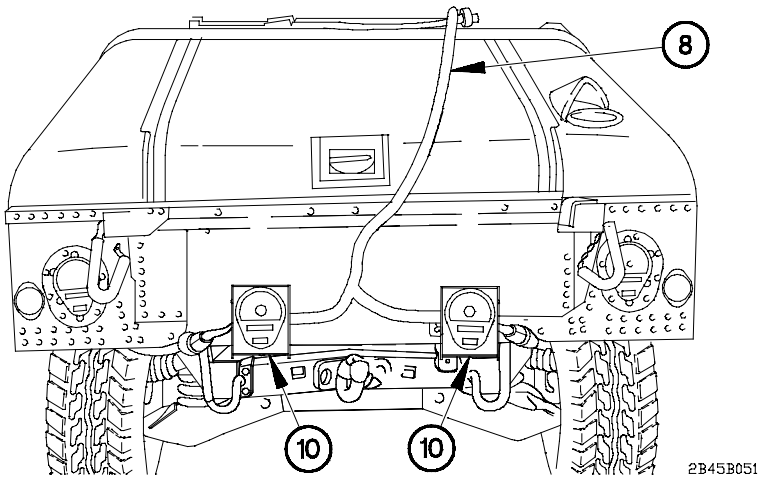

(10) Disconnect tow lights cable (8) from two emergency tow lights (10).

(11) Remove two emergency tow lights (10) from rear of M998.

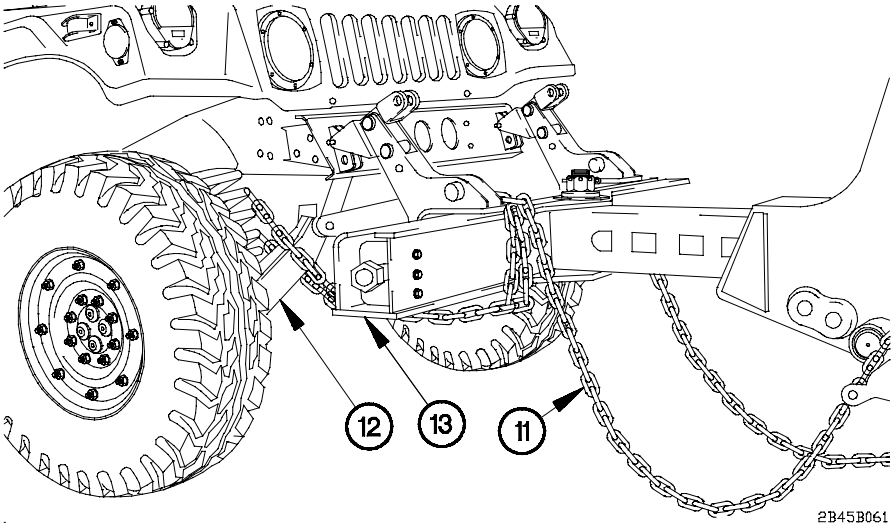

NOTE

Left and right side chains are removed the same way. Right side shown.

(12) Remove two chains (11) from front arm of M998 A-frames (12).

(13) Remove two chains (11) from crossbar (13).

2-45. M998 SERIES TOWING CONNECTION/DISCONNECTION (CONT)

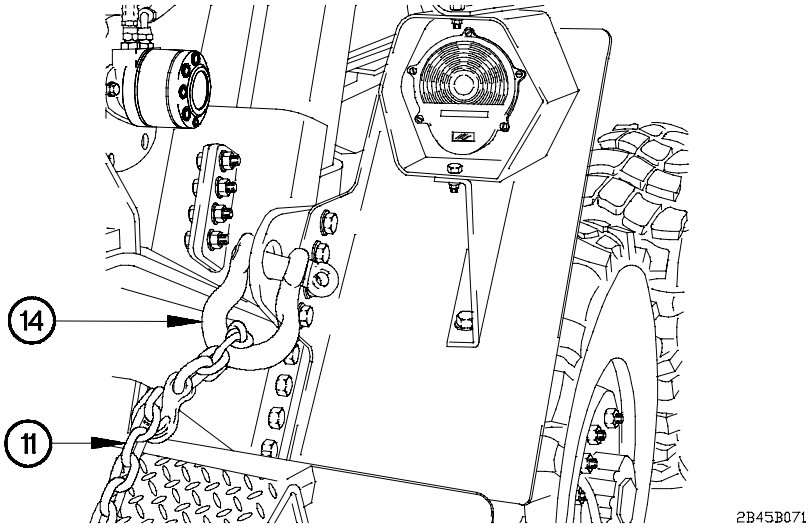

(14) Remove other end of two chains (11) from M1089 rear shackles (14).

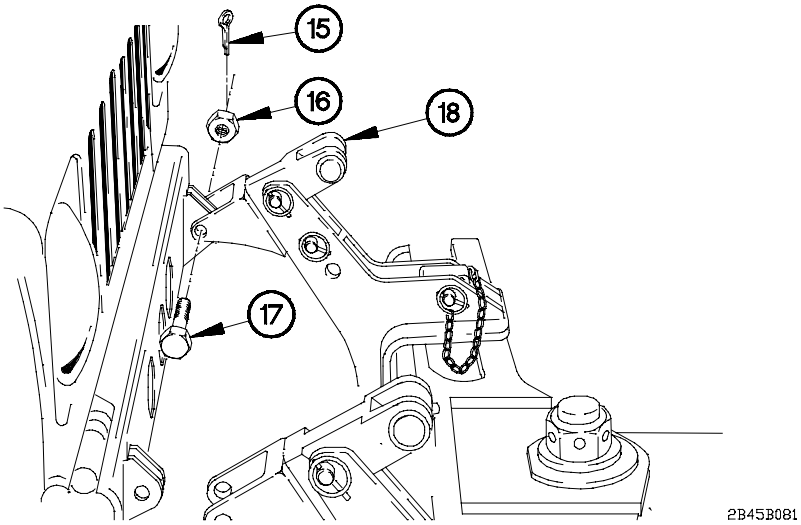

NOTE

Left and right side top bumper lift tools are removed from towed vehicle the same way. Left side shown.

(15) Remove two cotter pins (15), nuts (16), and bolts (17) from two top bumper lift tools (18).

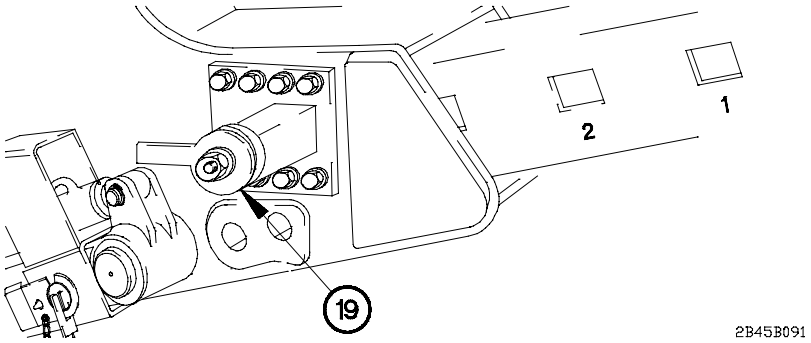

(16) Unlock stinger cam lock (19).

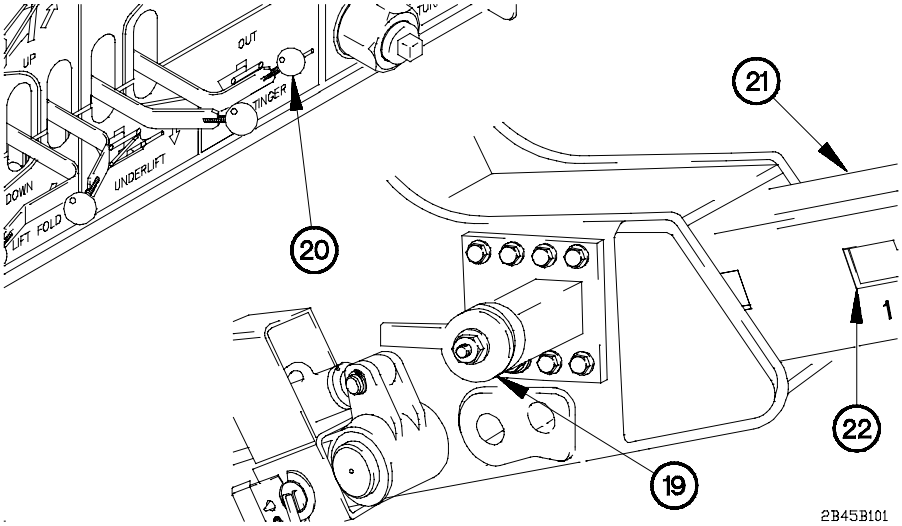

(17) Place STINGER lever (20) to IN position to retract stinger (21) until stinger cam lock (19) is aligned with first hole (22) in stinger.

WARNING

Stinger cam lock must be locked in first rectangular hole on stinger before underlift assembly is folded in its stowed position. Crossbar could shift suddenly. Failure to comply may result in injury to personnel.

(18) Lock stinger cam lock (19).

NOTE

Shackles are attached to M998 tow eyes using bolts, nuts, and cotter pins that were removed with M998 shackles.

(19) Install shackles on M998 tow eyes (TM 9-2320-280-10).

2-45. M998 SERIES TOWING CONNECTION/DISCONNECTION (CONT)

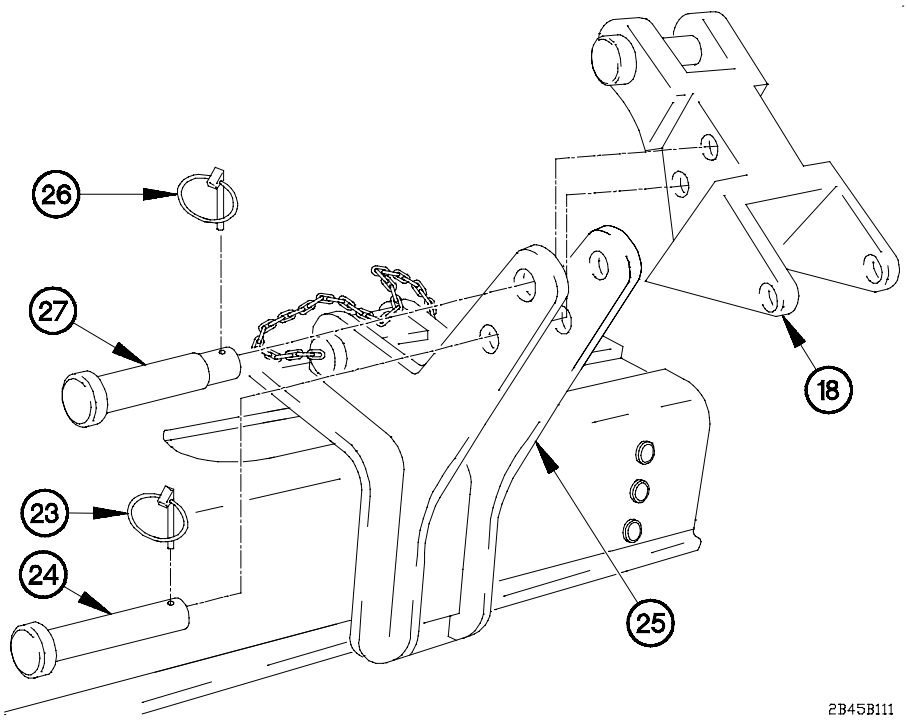

NOTE

Left and right side top bumper lift tools are removed from lift tools the same way. Right side shown.

(20) Remove two lynch pins (23) and small pins (24) from two lift tools (25).

(21) Remove two lynch pins (26), large pins (27) and top bumper lift tools (18) from two lift tools (25).

(22) Install two large pins (27) and lynch pins (26) in lift tools (25).

(23) Install two small pins (24) and lynch pins (23) in lift tools (25).

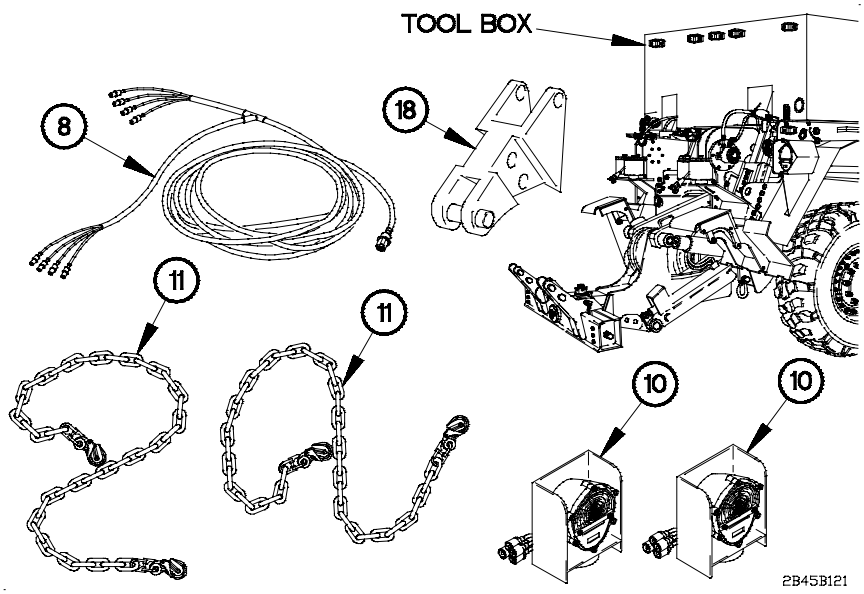

(24) Stow two chains (11), top bumper lift tools (18), emergency tow lights (10), and tow lights cable (8) in tool box.

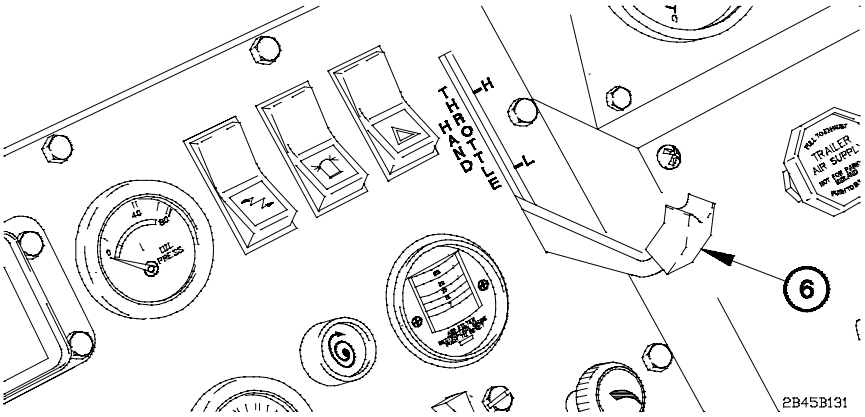

(25) Raise underlift assembly (para 2-44e).

(26) Disconnect WRECKER REMOTE CONTROL (para 2-44c). ■

(27) Set engine speed to idle (750 rpm) by decreasing HAND THROTTLE lever (6) to full down position.

2-45. M998 SERIES TOWING CONNECTION/DISCONNECTION (CONT)

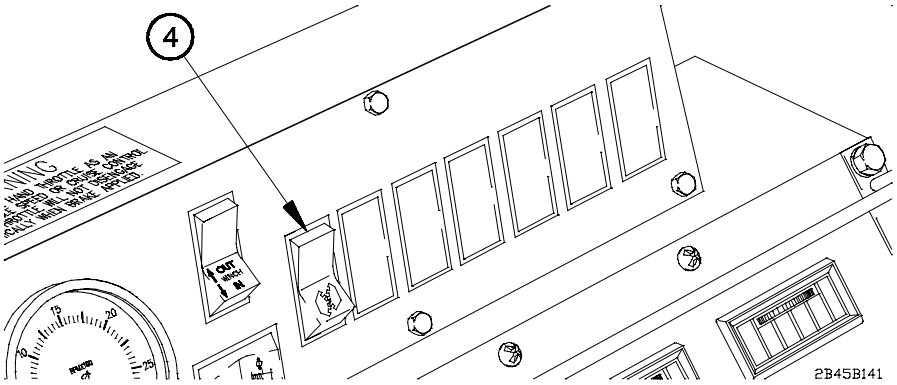

(28) Position PTO switch (4) to off.

(29) Shut down engine (para 2-27f).

(30) Lower and remove two amber warning lights (para 2-74).

c. Rear Connection.

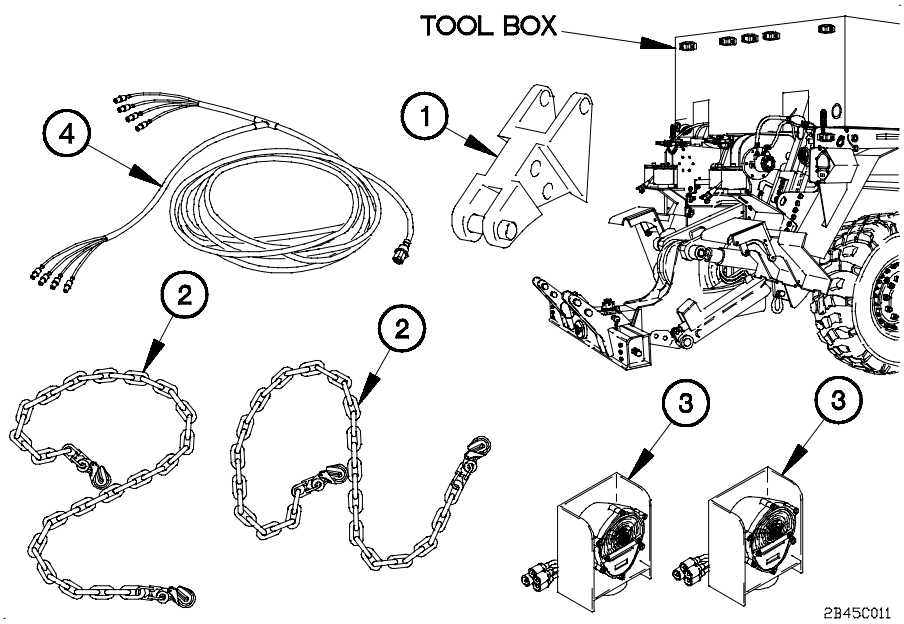

(1) Remove two top bumper lift tools (1), chains (2), emergency tow lights (3), and tow lights cable (4) from tool box.

(2) Prepare underlift assembly for operation (para 2-44a).

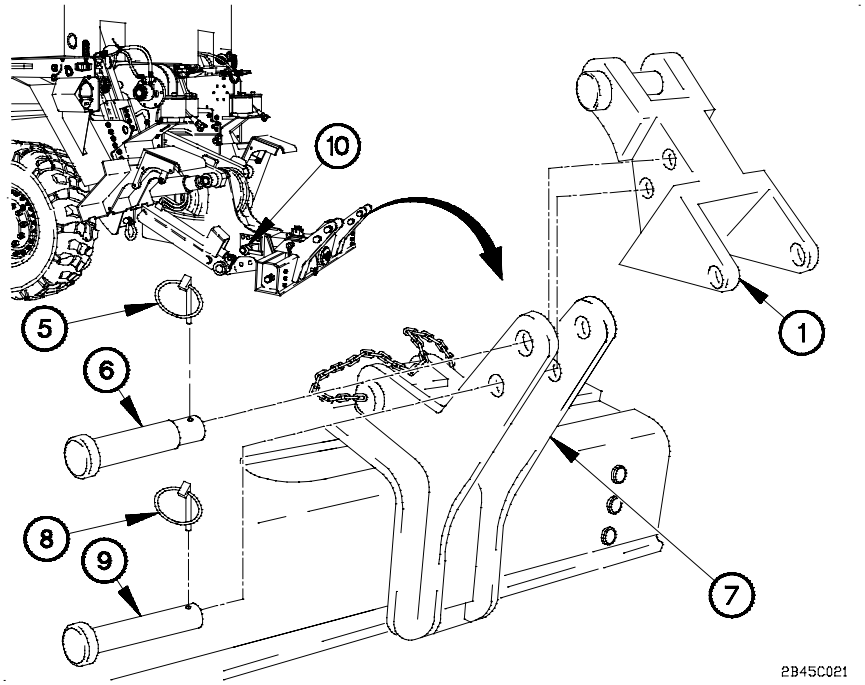

NOTE

Perform step 3 if assistant is not available to aid in towing connection.

(3) Connect WRECKER REMOTE CONTROL (para 2-44b).

NOTE

- Top bumper lift tools are installed with small pin hole facing toward rear of crossbar.
- Left and right side top bumper lift tools are installed the same way. Right side shown.

(4) Remove two lynch pins (5) and large pins (6) from lift tools (7).

(5) Remove two lynch pins (8) and small pins (9) from lift tools (7).

(6) Install top bumper lift tools (1) on lift tools (7) with large pins (6) and lynch pins (5).

(7) Install two small pins (9) and lynch pins (8) in two top bumper lift tools (1).

(8) Remove two shackles from M998 tow eyes (TM 9-2320-280-10).

(9) Unlock stinger cam lock (10).

2-45. M998 SERIES TOWING CONNECTION/DISCONNECTION (CONT)

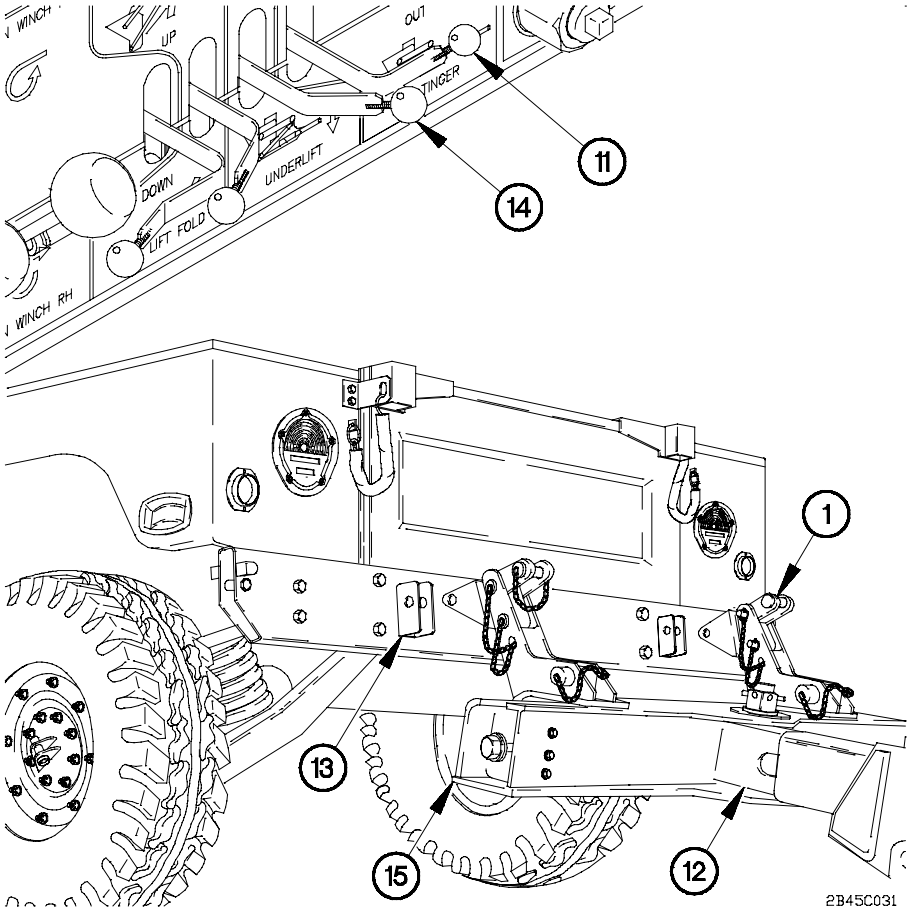

(10) Place STINGER lever (11) in OUT position to extend stinger (12) until two top bumper lift tools (1) are aligned with M998 tow eyes (13).

WARNING

Goggles must be worn while operating the wrecker control panel. Blowing dust and debris may become airborne while engine is running. Failure to comply may result in injury to personnel.

(11) Place UNDERLIFT lever (14) in UP position to raise crossbar (15) until two top bumper lift tools (1) are aligned with M998 tow eyes (13).

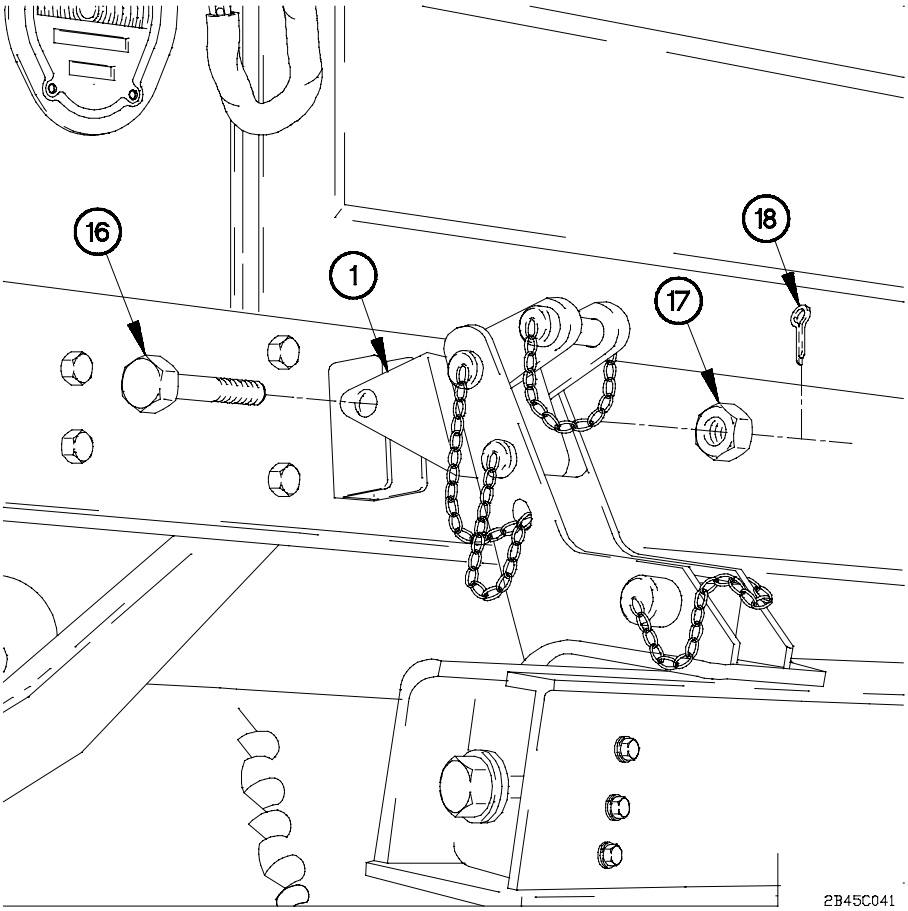

NOTE

- Left and right side top bumper lift tools are installed on M998 tow eyes the same way. Right side shown.
- Top bumper lift tools are attached to M998 tow eyes with bolts, nuts and cotter pins removed from M998 shackles.

(12) Install two bolts (16), nuts (17), and cotter pins (18) in top bumper lift tools (1).

(13) Prepare M998 for towing (TM 9-2320-280-10).

2-45. M998 SERIES TOWING CONNECTION/DISCONNECTION (CONT)

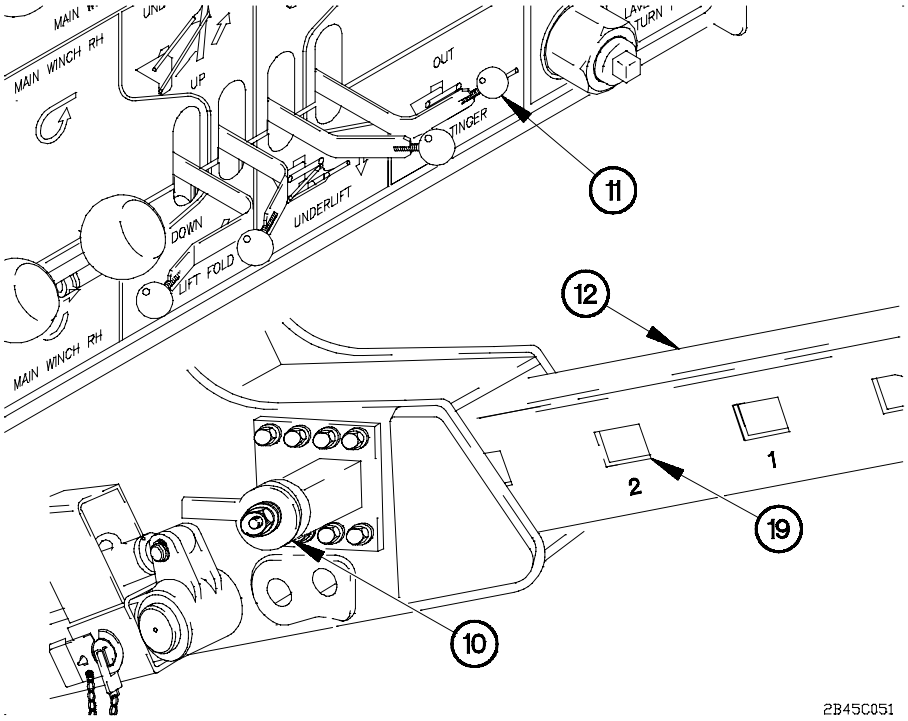

CAUTION

- Stinger cam lock is normally locked in second rectangular hole on stinger when towing M998. It may be necessary to lock stinger cam lock in third rectangular hole on stinger if components mounted on rear of M998 interfere with movement of crossbar. Lock stinger cam lock in hole which will allow crossbar to rotate freely. Failure to comply may result in damage to equipment.

- It may be necessary to start with holes 4 or 5 on stinger when recovering a vehicle on uneven ground. Once level ground is reached, lock stinger in second hole. Failure to comply may result in damage to equipment.

(14) Place STINGER lever (11) to IN position to retract stinger (12) until desired stinger cam lock hole (19) is aligned.

(15) Lock stinger cam lock (10).

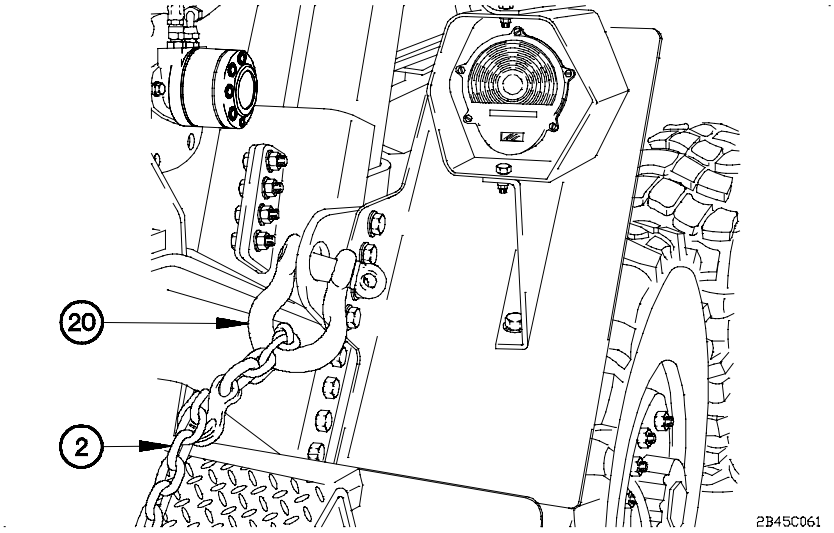

NOTE

Left and right side chains are installed the same way. Right side shown.

(16) Connect one end of two chains (2) to M1089 rear shackles (20).

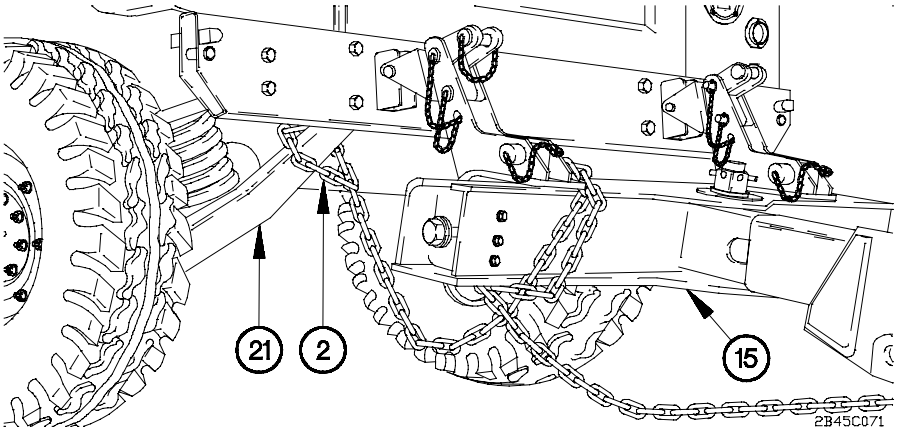

NOTE

Wrap chains around crossbar so that chains are approximately 6-10 in. (15-25 cm) above ground.

(17) Wrap two chains (2) around crossbar (15).

(18) Connect other end of two chains (2) around rear crossmember (21) under M998.

2-45. M998 SERIES TOWING CONNECTION/DISCONNECTION (CONT)

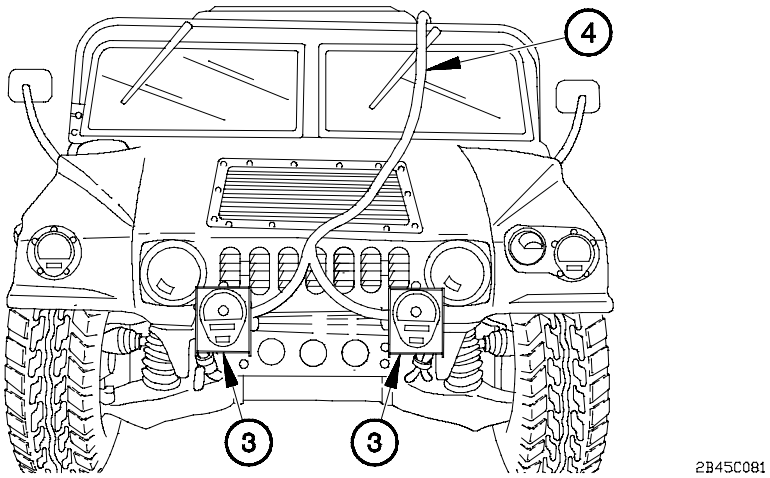

(19) Position two emergency tow lights (3) on front of M998.

(20) Connect tow lights cable (4) to two emergency tow lights (3).

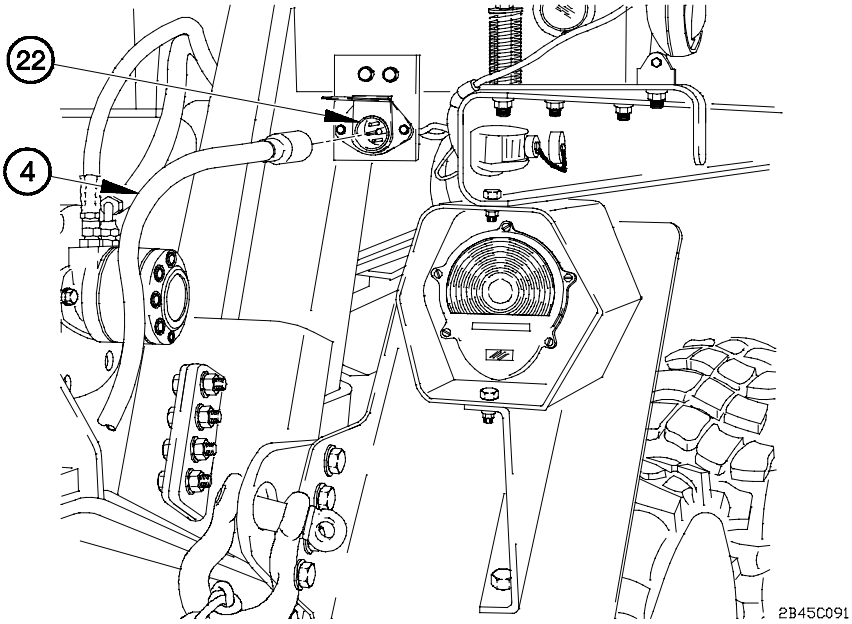

(21) Route tow lights cable (4) along top of M998.

(22) Connect tow lights cable (4) to M1089 rear electrical connector (22).

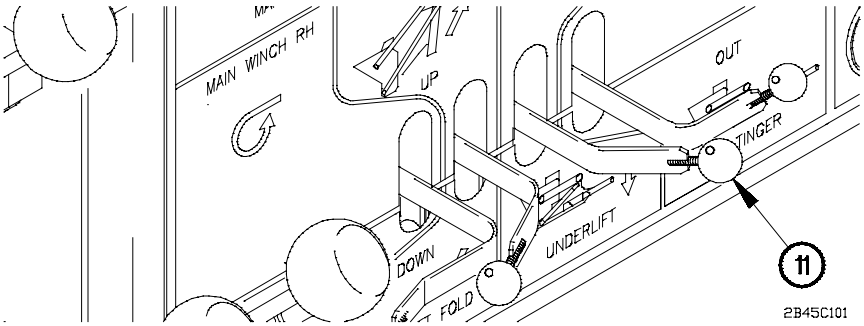

CAUTION

Ensure all loose equipment is secure on M998. Failure to comply may result in damage to equipment.

(23) Prepare M998 for towing (TM 9-2320-280-10).

WARNING

Keep personnel clear of underlift assembly and disabled vehicle when raising. Disabled vehicle could fall suddenly. Failure to comply may result in serious injury or death to personnel.

(24) Place UNDERLIFT lever (11) in UP position to raise M998 until wheels are approximately 16 in. (41 cm) off ground.

(25) Disconnect WRECKER REMOTE CONTROL (para 2-44c). ■

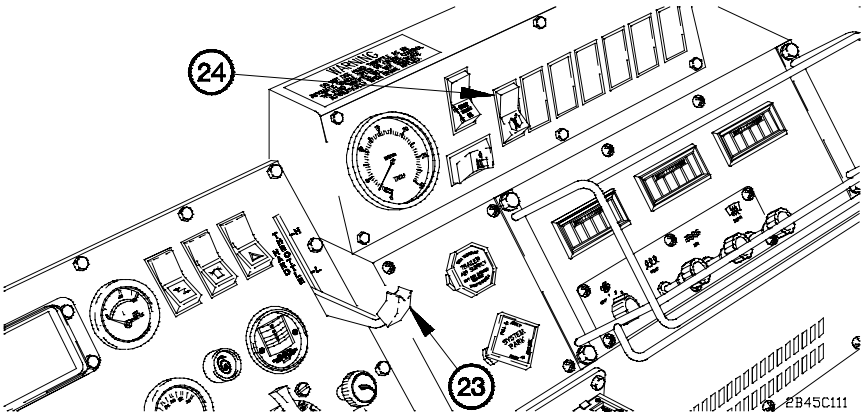

(26) Set engine speed to idle (750 rpm) by decreasing HAND THROTTLE lever (23) to full down position.

(27) Position PTO switch (24) to off.

2-45. M998 SERIES TOWING CONNECTION/DISCONNECTION (CONT)

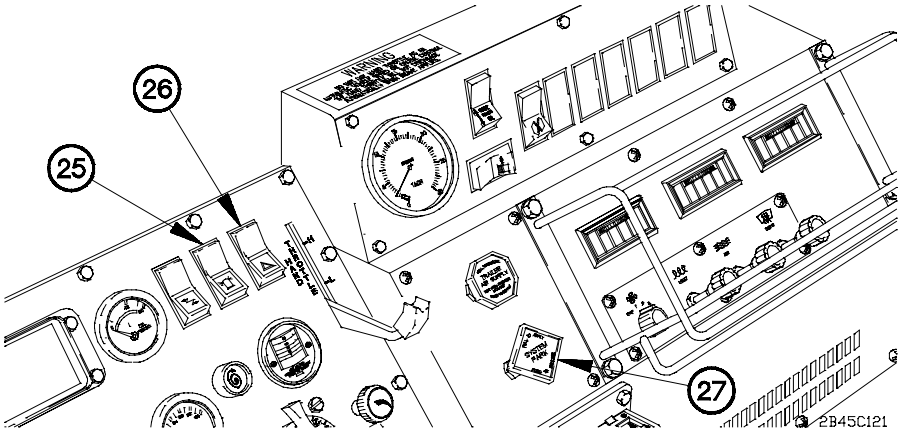

(28) Install and raise two amber warning lights (para 2-74).

(29) Turn on service drive lights (para 2-27c).

(30) Position amber warning lights switch (25) to on.

(31) Position hazard lights switch (26) to on.

(32) Push in SYSTEM PARK control (27).

(33) Set transmission in gear (para 2-27e).

WARNING

M1089 should not be operated at speeds over 15 mph (24 km/h) when towing vehicle except on paved roads when Operator determines that vehicle being towed and terrain allow safe operation. The following are maximum speeds for safe operation. Exceeding these speeds may result in loss of vehicle control.

TERRAIN CONDITION	MAXIMUM SPEED
on road (level)	35 mph (56 km/h)
on road (hilly)	30 mph (48 km/h)
off road	15 mph (24 km/h)

Failure to comply may result in serious injury or death to personnel or damage to equipment.

(34) Transport M998.

d. Rear Disconnection.

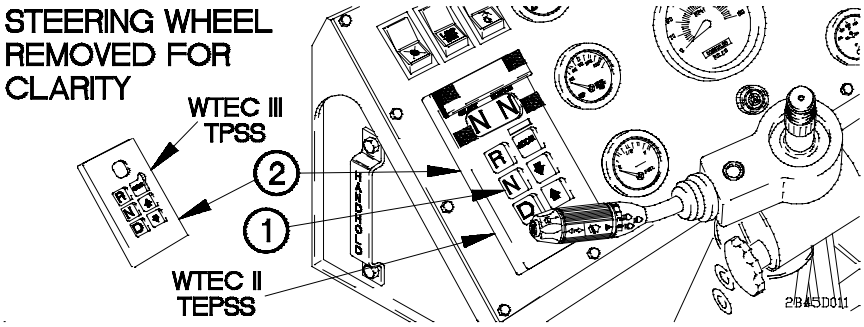

(1) Start engine (para 2-27a or b).

(2) Press N (Neutral) button (1) on WTEC II TEPSS (2) or WTEC III TPSS (2).

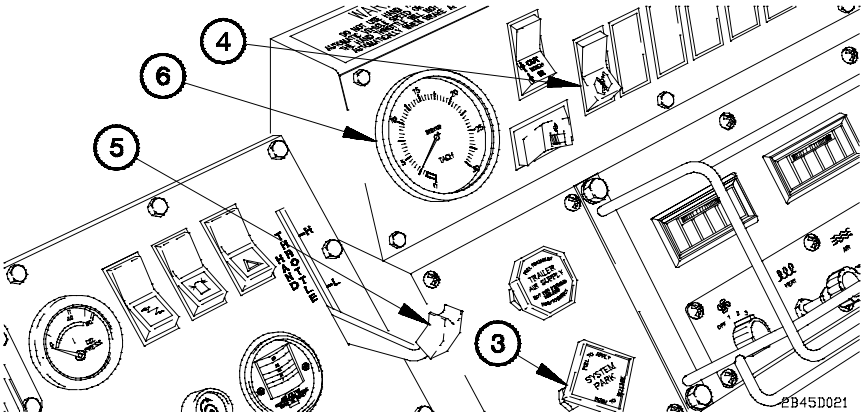

(3) Pull out SYSTEM PARK control (3).

(4) Position PTO switch (4) to on.

CAUTION

Keep tachometer within 1,250-1,450 rpm when Power Take-Off PTO is engaged. Failure to comply may result in damage to equipment.

NOTE

In the event of a tachometer failure a HAND THROTTLE lever positioned to L is approximately 1,250-1,450 rpm.

(5) Set engine speed by increasing HAND THROTTLE lever (5) until tachometer (6) reads 1,250-1,450 rpm.

2-45. M998 SERIES TOWING CONNECTION/DISCONNECTION (CONT)

NOTE

Perform step 6 if assistant is not available to aid in towing connection.

(6) Connect WRECKER REMOTE CONTROL (para 2-44b).

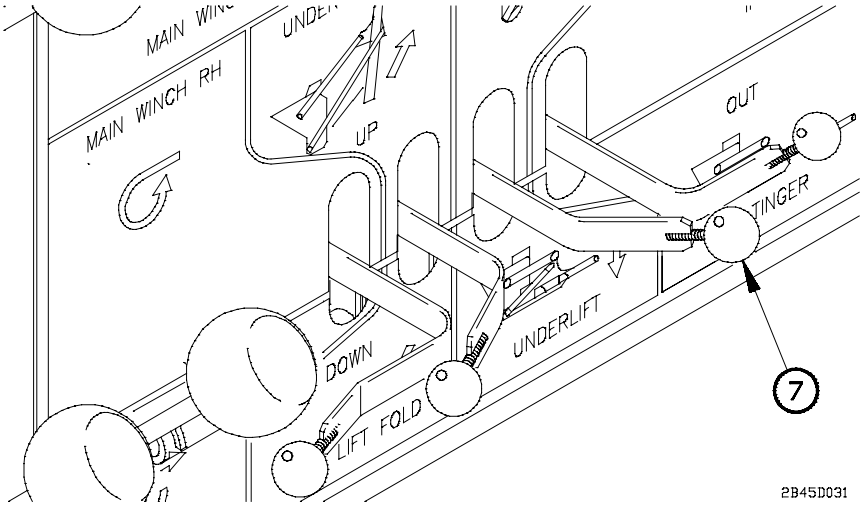

WARNING

- **Goggles must be worn while operating wrecker control panel. Blowing dust and debris may become airborne while engine is running. Failure to comply may result in injury to personnel.**
- **Keep personnel clear of underlift assembly and disabled vehicle when raising. Disabled vehicle could fall suddenly. Failure to comply may result in serious injury or death to personnel.**

(7) Place UNDERLIFT lever (7) in DOWN position to lower M998 until vehicle wheels are in firm contact with ground.

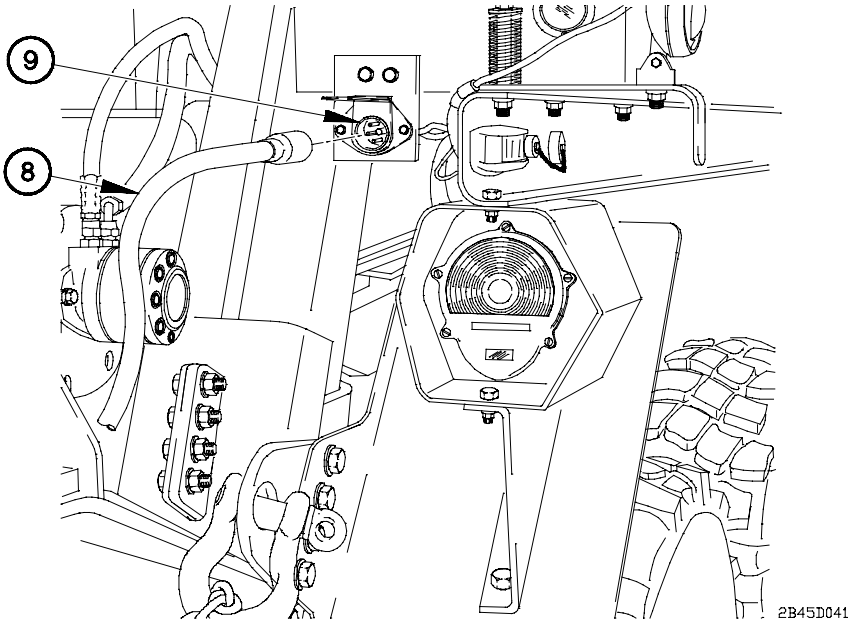

(8) Set parking brake on M998 (TM 9-2320-280-10).

(9) Disconnect tow lights cable (8) from M1089 rear electrical connector (9).

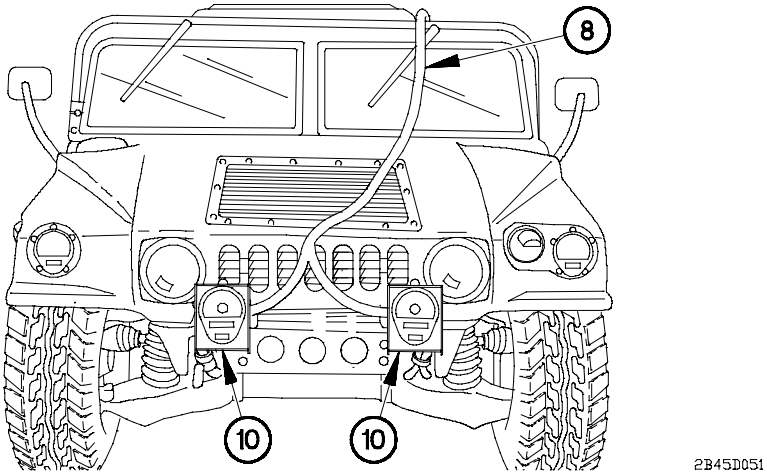

(10) Disconnect tow lights cable (8) from two emergency tow lights (10).

(11) Remove two emergency tow lights (10) from front of M998.

2-45. M998 SERIES TOWING CONNECTION/DISCONNECTION (CONT)

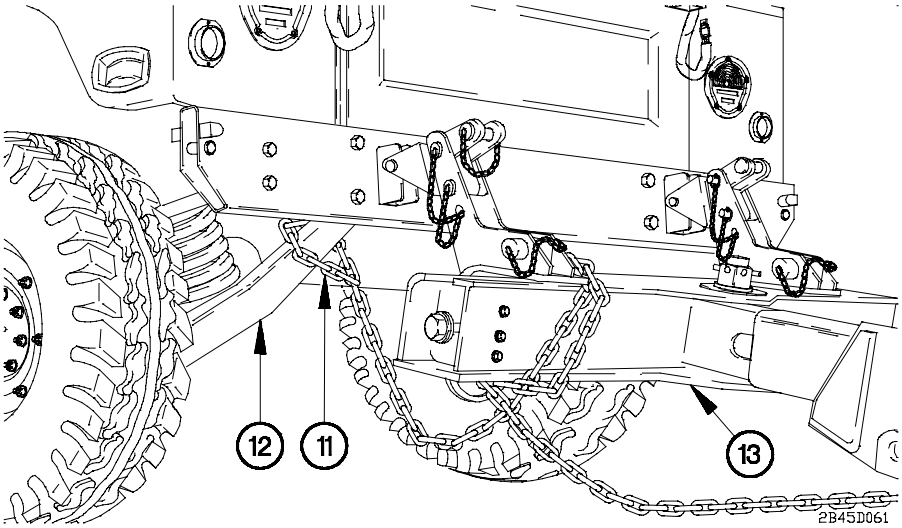

NOTE

Left and right side chains are removed the same way. Right side shown.

(12) Remove two chains (11) from M998 rear crossmember (12).

(13) Remove two chains (11) from crossbar (13).

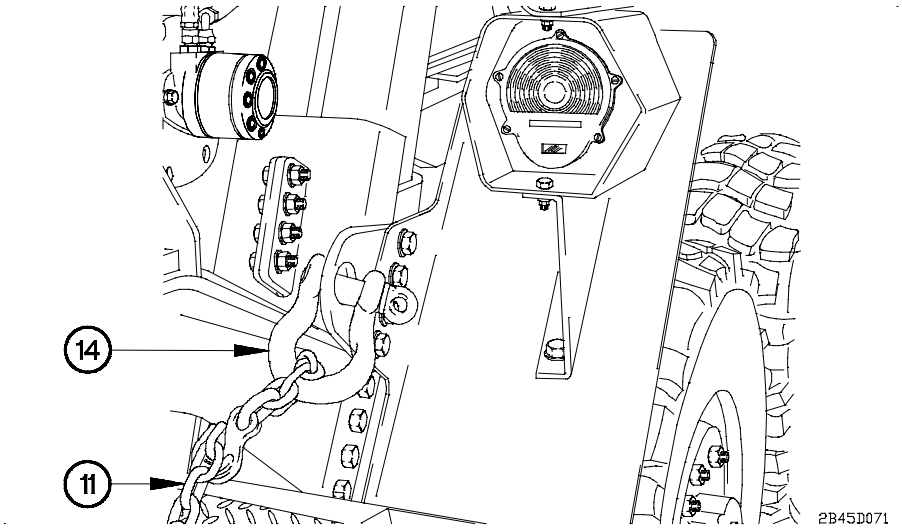

(14) Remove other end of two chains (11) from M1089 rear shackles (14).

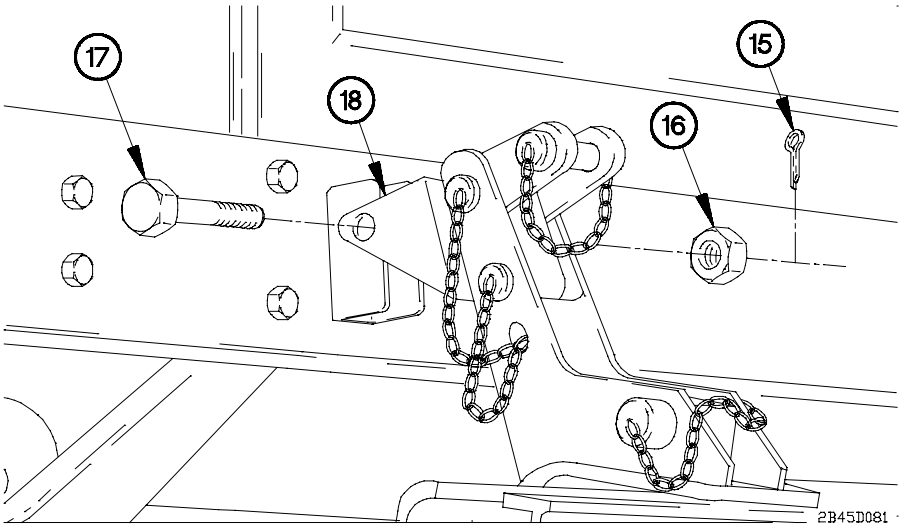

NOTE

Left and right side top bumper tools are removed the same way. Right side shown.

(15) Remove two cotter pins (15), nuts (16), and bolts (17) from two top bumper lift tools (18).

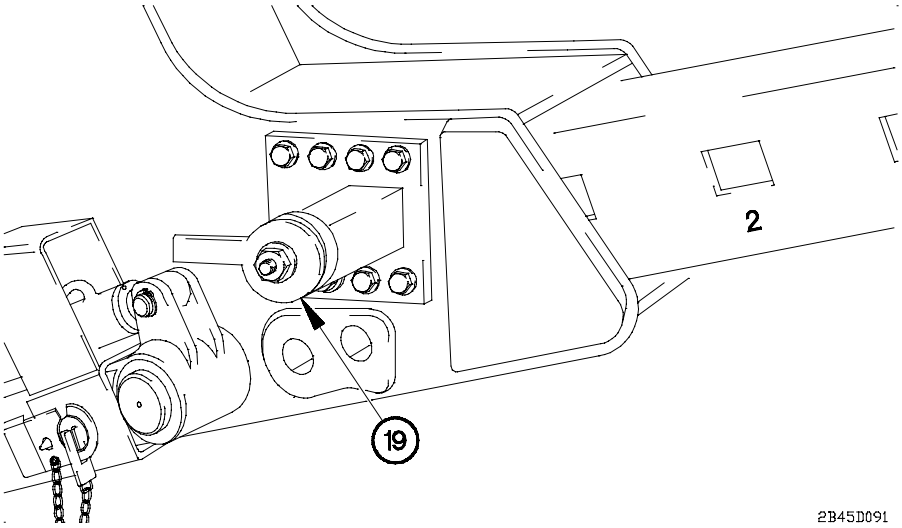

(16) Unlock stinger cam lock (19).

2-45. M998 SERIES TOWING CONNECTION/DISCONNECTION (CONT)

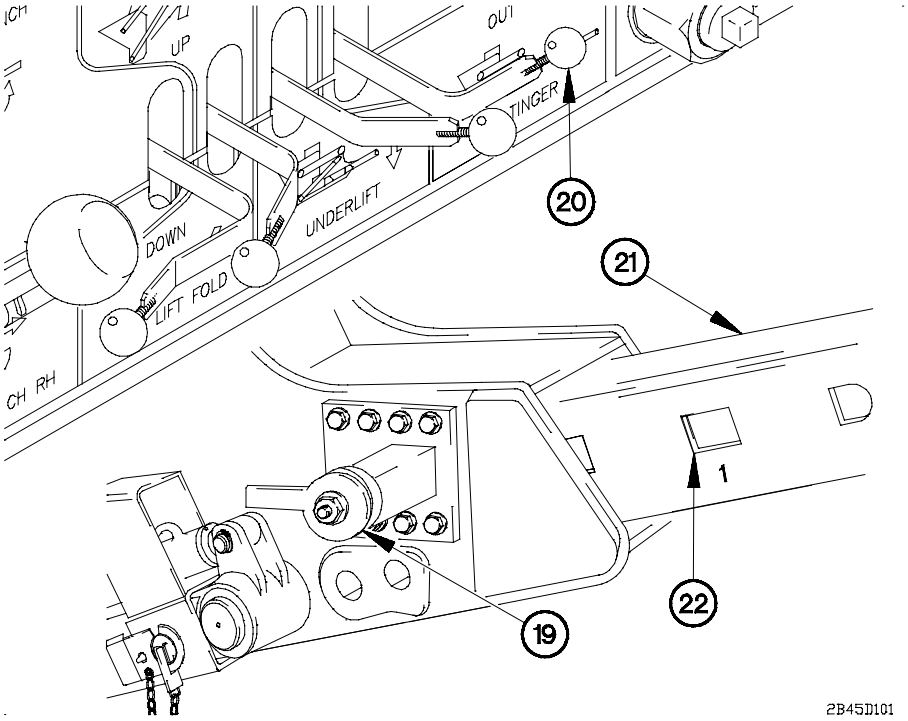

(17) Place STINGER lever (20) to IN position to retract stinger (21) until stinger cam lock (19) is aligned with first hole (22) in stinger.

WARNING

Stinger cam lock must be locked in first rectangular hole on stinger before underlift assembly is folded in its stowed position. Crossbar could shift suddenly. Failure to comply may result in injury to personnel.

(18) Lock stinger cam lock (19).

NOTE

Shackles are attached to M998 tow eyes using bolts, nuts, and cotter pins that were removed from M998 shackles.

(19) Install shackles on M998 tow eyes (TM 9-2320-280-10).

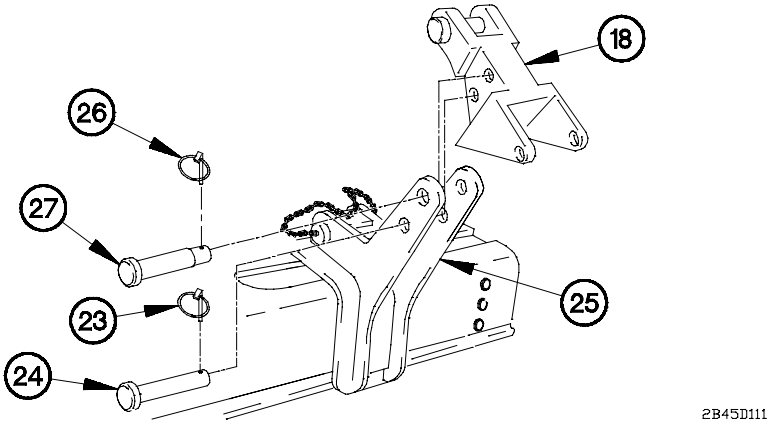

NOTE

Left and right side top bumper lift tools are removed from lift tools the same way. Right side shown.

(20) Remove two lynch pins (23) and small pins (24) from two lift tools (25).

(21) Remove two lynch pins (26), large pins (27) and top bumper lift tools (18) from two lift tools (25).

(22) Install two large pins (27) and lynch pins (26) in two lift tools (25).

(23) Install two small pins (24) and lynch pins (23) in two lift tools (25).

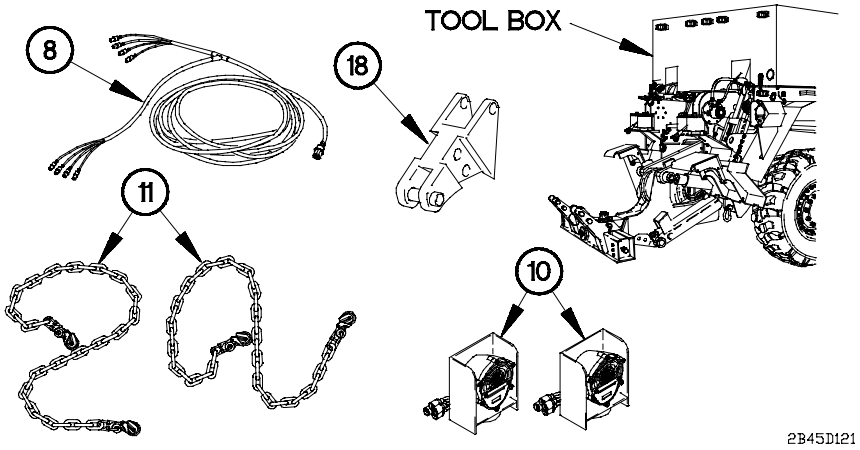

(24) Stow two chains (11), top bumper lift tools (18), emergency tow lights (10), and tow lights cable (8) in tool box.

2-45. M998 SERIES TOWING CONNECTION/DISCONNECTION (CONT)

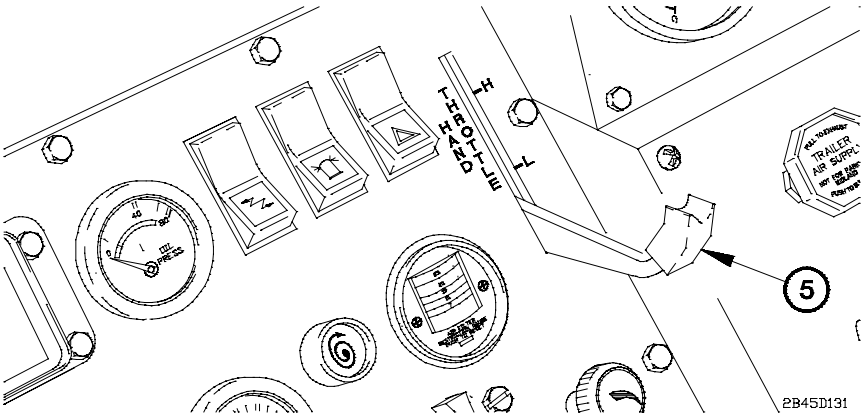

(25) Raise underlift assembly (para 2-44e).

■ (26) Disconnect WRECKER REMOTE CONTROL (para 2-44c).

(27) Set engine speed to idle (750 rpm) by decreasing HAND THROTTLE lever (5) to full down position.

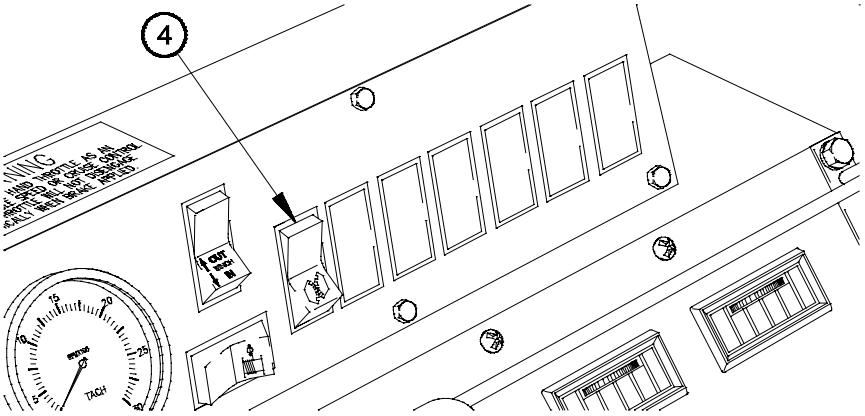

(28) Position PTO switch (4) to off.

(29) Shut down engine (para 2-27f).

(30) Lower and remove two amber warning lights (para 2-74).

2-46. M1008 SERIES TOWING CONNECTION/DISCONNECTION

a. Front Connection.

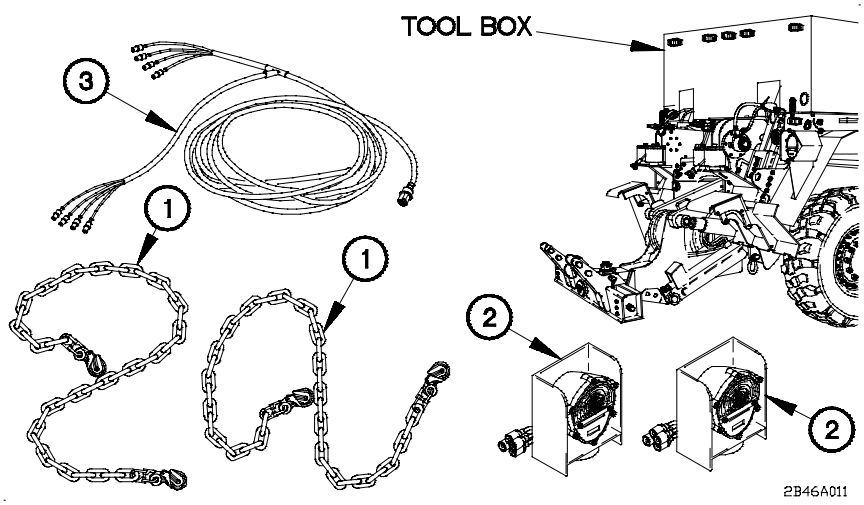

(1) Remove two chains (1), emergency tow lights (2), and tow lights cable (3) from tool box.

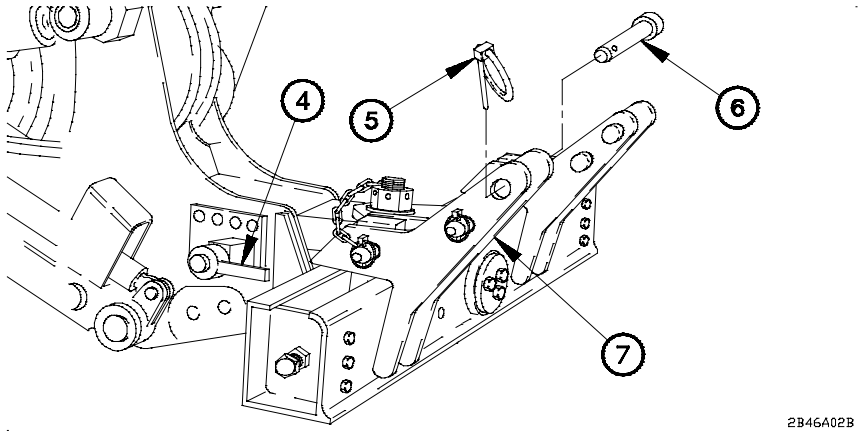

(2) Prepare underlift assembly for operation (para 2-44a).

NOTE

Perform step 3 is assistant is not available to aid in towing connection.

(3) Connect WRECKER REMOTE CONTROL (para 2-44b).

(4) Unlock stinger cam lock (4).

(5) Remove two top lynch pins (5) and pins (6) from two lift tools (7).

2-46. M1008 SERIES TOWING CONNECTION/DISCONNECTION (CONT)

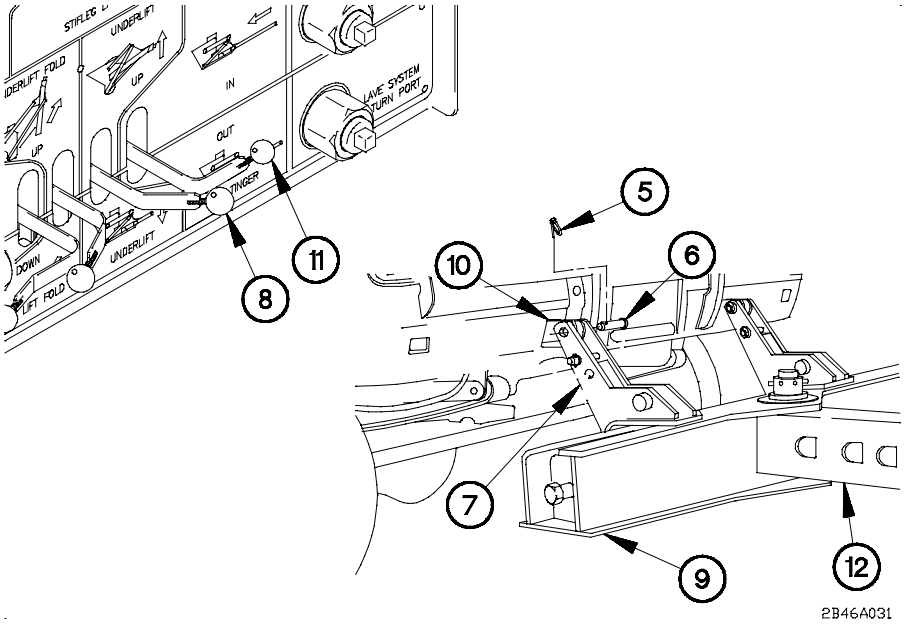

(6) Remove two shackles from M1008 tow eyes (TM 9-2320-289-10).

WARNING

Goggles must be worn while operating wrecker control panel. Blowing dust and debris may become airborne while engine is running. Failure to comply may result in injury to personnel.

(7) Place UNDERLIFT lever (8) in UP position to raise crossbar (9) until lift tools (7) are aligned with M1008 tow eyes (10).

(8) Place STINGER lever (11) in OUT position to extend stinger (12) until lift tools (7) are aligned with M1008 tow eyes (10).

NOTE

Left and right side lift tools are installed on M1008 tow eyes the same way. Right side shown.

(9) Install two lift tools (7) on M1008 tow eyes (10) with two pins (6) and lynch pins (5).

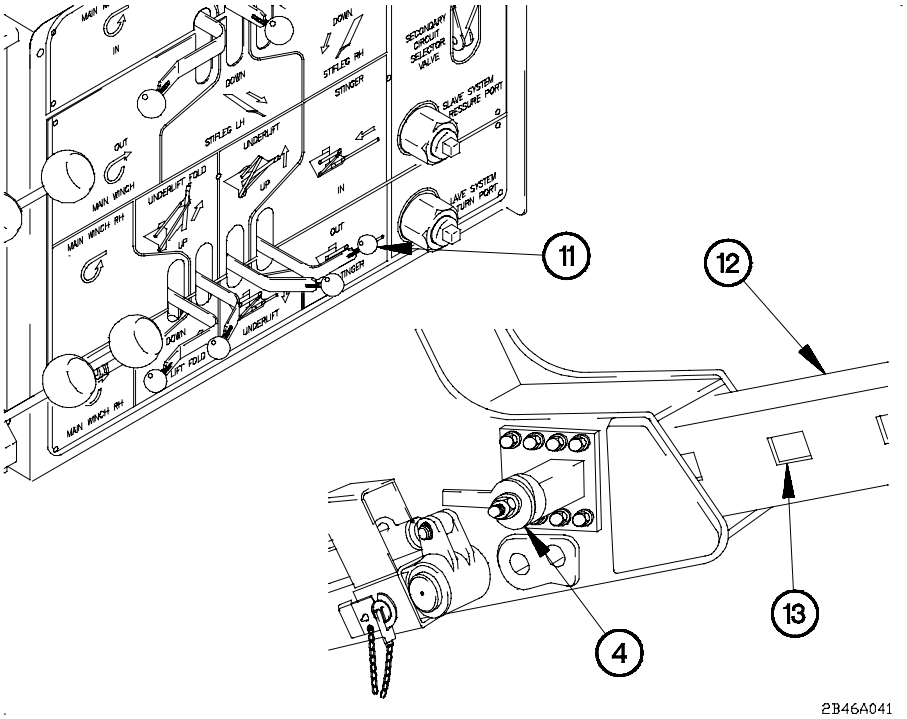

CAUTION

- Stinger cam lock is normally locked in second rectangular hole on stinger when towing an M1008. It may be necessary to lock stinger cam lock in third rectangular hole on stinger if winches or other components mounted on front of M1008 interfere with movement of crossbar. Lock stinger cam lock in hole which will allow crossbar to rotate freely. Failure to comply may result in damage to equipment.

- It may be necessary to start with holes 4 or 5 on stinger when recovering a vehicle on uneven ground. Once level ground is reached, lock stinger in second hole. Failure to comply may result in damage to equipment.

(10) Place STINGER lever (11) to IN position to retract stinger (12) until desired stinger cam lock hole (13) is aligned.

(11) Lock stinger cam lock (4).

2-46. M1008 SERIES TOWING CONNECTION/DISCONNECTION (CONT)

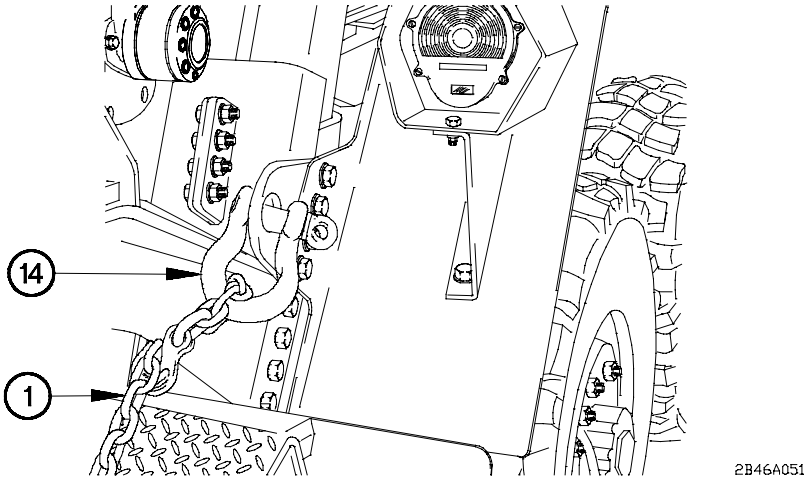

NOTE

Left and right side chains are installed the same way. Right side shown.

(12) Connect one end of two chains (1) to M1089 rear shackles (14).

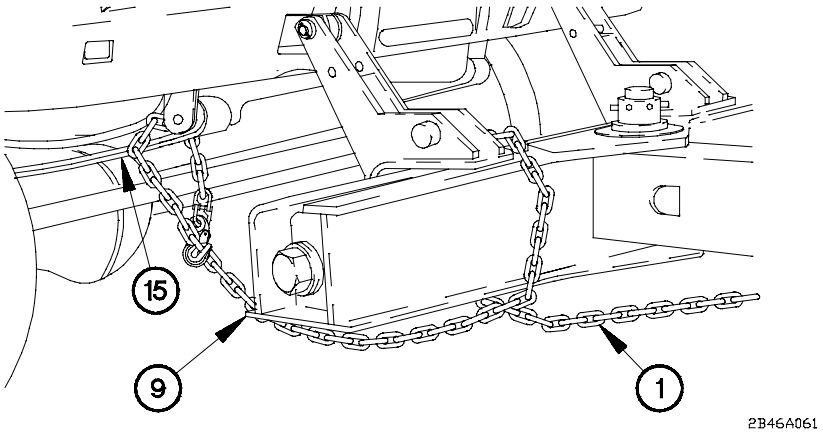

NOTE

Wrap chains around crossbar so that chains are approximately 6-10 in. (15-25 cm) above ground.

(13) Wrap two chains (1) around crossbar (9).

(14) Connect other end of two chains (1) around M1008 front leaf spring supports (15).

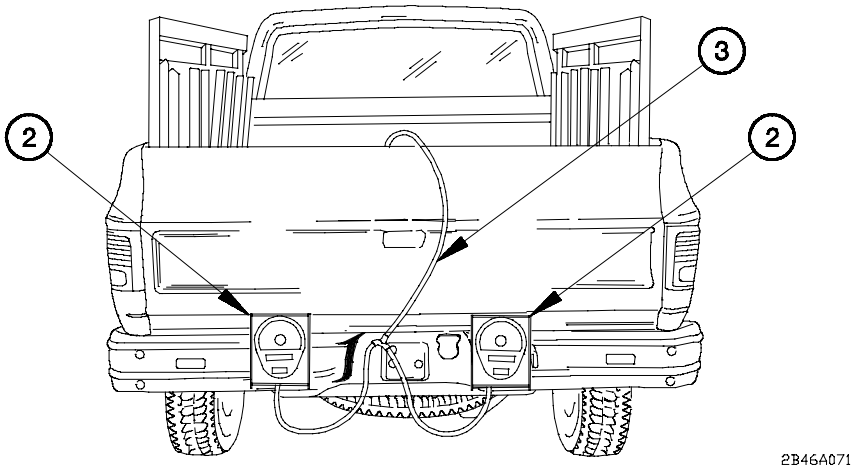

(15) Position two emergency tow lights (2) on rear of M1008.

(16) Connect tow lights cable (3) to two emergency tow lights (2).

(17) Route tow lights cable (3) along top of M1008.

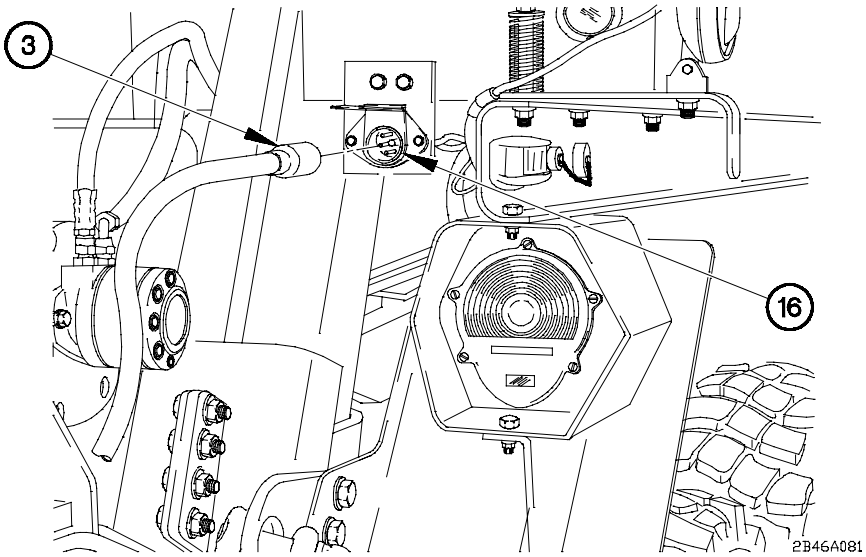

(18) Connect tow lights cable (3) to M1089 rear electrical connector (16).

2-46. M1008 SERIES TOWING CONNECTION/DISCONNECTION (CONT)

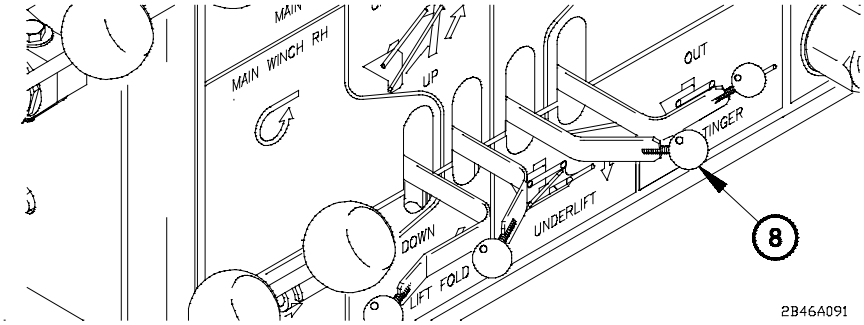

CAUTION

All loose equipment must be secure on M1008. Failure to comply may result in damage to equipment.

(19) Prepare M1008 for towing (TM 9-2320-289-10).

WARNING

Keep personnel clear of underlift assembly and disabled vehicle when raising. Disabled vehicle could fall suddenly. Failure to comply may result in serious injury or death to personnel.

(20) Place UNDERLIFT lever (8) in UP position to raise M1008 until wheels are approximately 16 in. (41 cm) off ground.

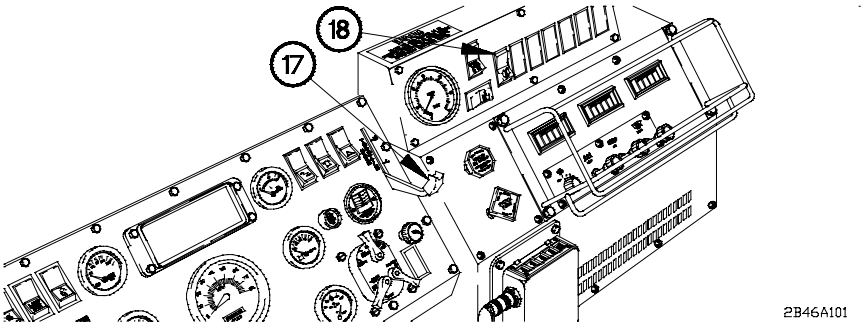

■ (21) Disconnect WRECKER REMOTE CONTROL (para 2-44c).

(22) Set engine speed to idle (750 rpm) by decreasing HAND THROTTLE lever (17) to full down position.

(23) Position PTO switch (18) to off.

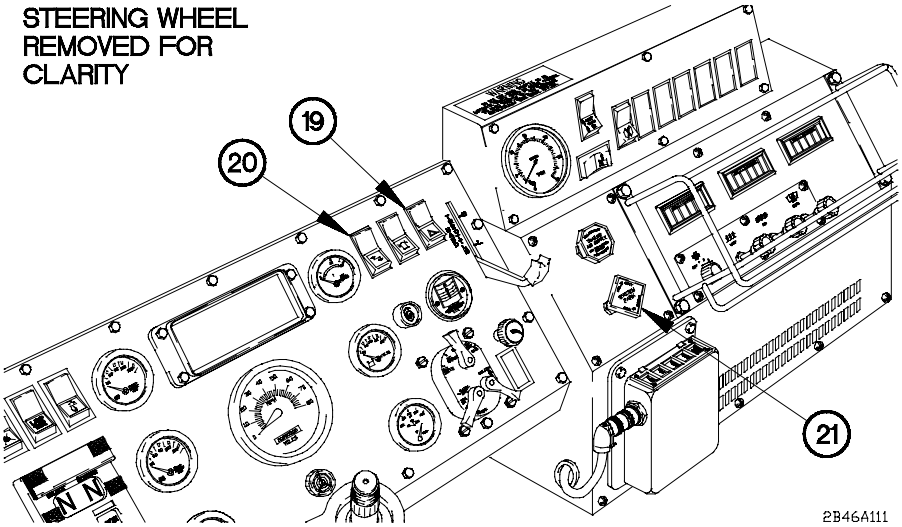

(24) Install and raise two amber warning lights (para 2-74).

(25) Turn on service drive lights (para 2-27c).

(26) Position hazard lights switch (19) to on.

(27) Position amber warning lights switch (20) to on.

(28) Push in SYSTEM PARK control (21).

(29) Set transmission in gear (para 2-27e).

WARNING

M1089 should not be operated at speeds over 15 mph (24 km/h) when towing, except on paved roads when Operator determines that terrain conditions allow safe operation. The following are maximum speeds for safe operation:

TERRAIN CONDITION	MAXIMUM SPEED
on road (level)	35 mph (56 km/h)
on road (hilly)	30 mph (48 km/h)
off road	15 mph (24 km/h)

Failure to comply may result in serious injury or death to personnel or damage to equipment.

(30) Transport M1008.

2-46. M1008 SERIES TOWING CONNECTION/DISCONNECTION (CONT)

b. Front Disconnection.

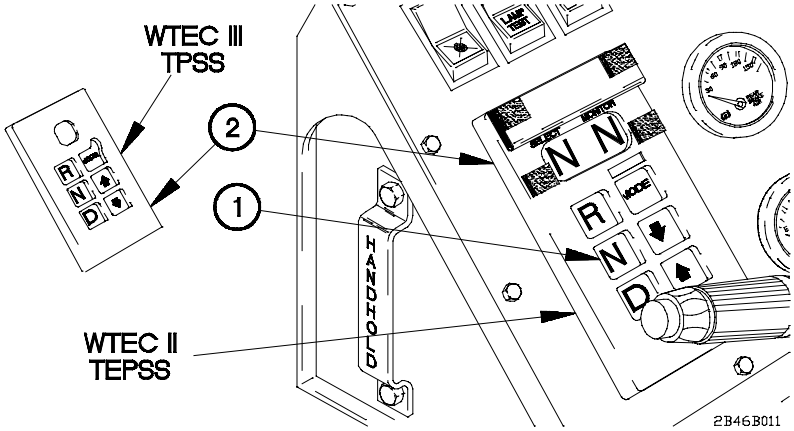

(1) Start engine (para 2-27a or b).

(2) Press N (Neutral) button (1) on WTEC II TEPSS (2) or WTEC III TPSS (2).

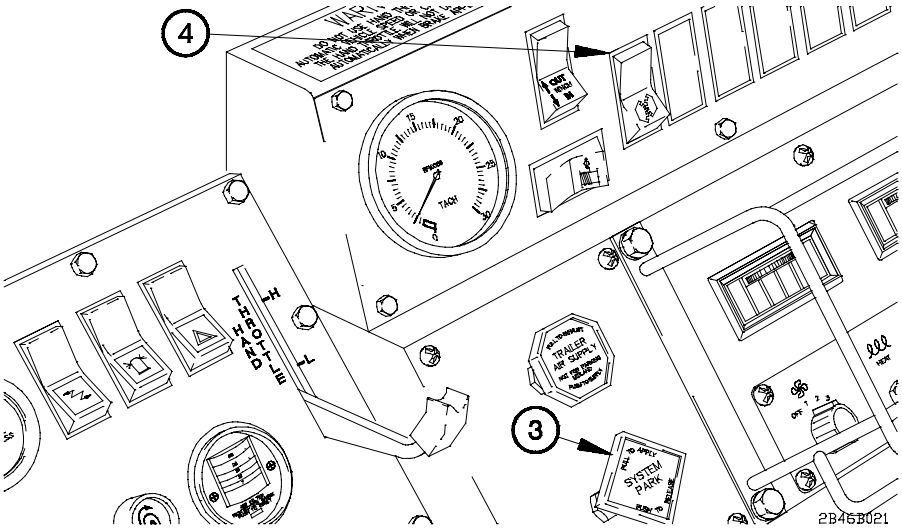

(3) Pull out SYSTEM PARK control (3).

(4) Position PTO switch (4) to on.

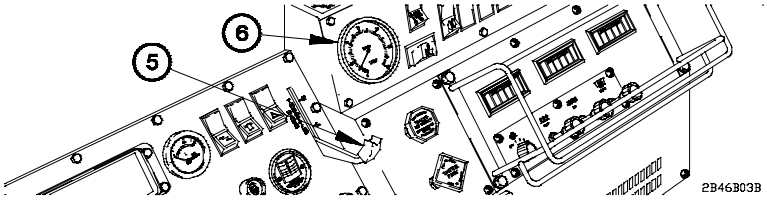

CAUTION

Keep tachometer within 1,250-1,450 rpm when Power Take-Off (PTO) is engaged. Failure to comply may result in damage to equipment.

NOTE

In the event of a tachometer failure a HAND THROTTLE lever positioned to L is approximately 1,250-1,450 rpm.

(5) Set engine speed by increasing HAND THROTTLE lever (5) until tachometer (6) reads 1,250-1,450 rpm.

NOTE

Perform step 6 if assistant is not available to aid in towing connection.

(6) Connect WRECKER REMOTE CONTROL (para 2-44b).

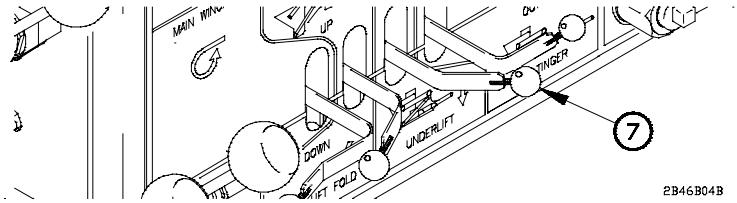

WARNING

- **Keep personnel clear of underlift assembly and disabled vehicle when raising. Disabled vehicle could fall suddenly. Failure to comply may result in serious injury or death to personnel.**

- **Goggles must be worn while operating wrecker control panel. Blowing dust and debris may become airborne while engine is running. Failure to comply may result in injury to personnel.**

(7) Place UNDERLIFT lever (7) in DOWN position to lower M1008 until wheels are in firm contact with ground.

(8) Set parking brake on M1008 (TM 9-2320-289-10).

2-46. M1008 SERIES TOWING CONNECTION/DISCONNECTION (CONT)

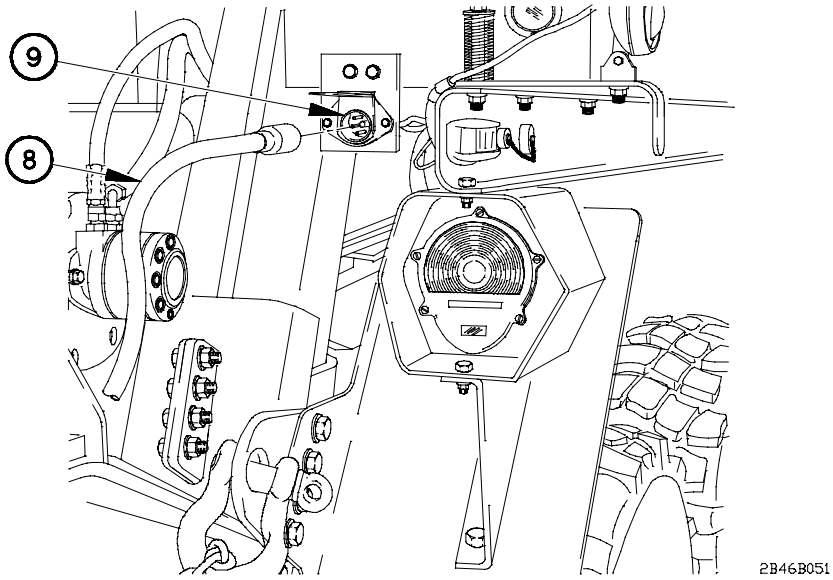

(9) Disconnect tow lights cable (8) from M1089 rear electrical connector (9).

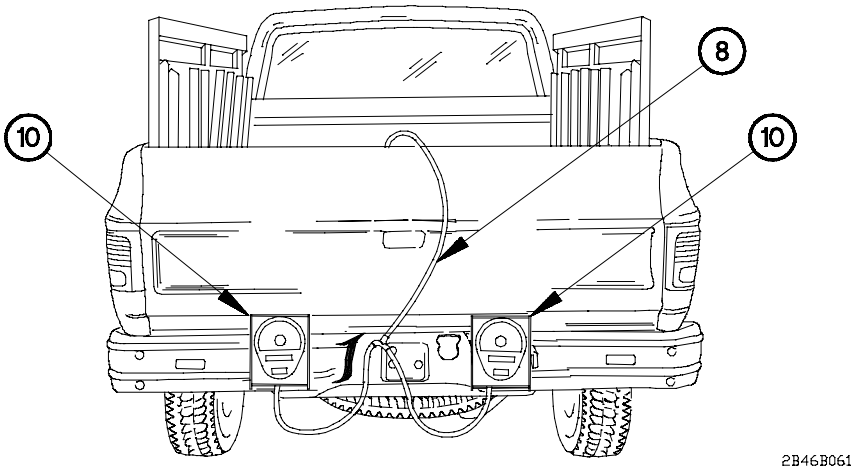

(10) Disconnect tow lights cable (8) from two emergency tow lights (10).

(11) Remove two emergency tow lights (10) from rear of M1008.

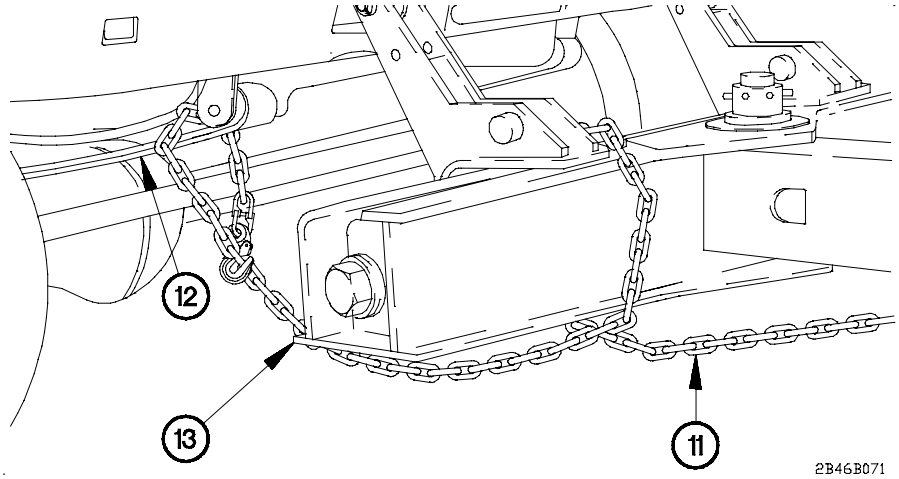

NOTE

Left and right side chains are removed the same way. Right side shown.

(12) Remove two chains (11) from M1008 front leaf spring supports (12).

(13) Remove two chains (11) from crossbar (13).

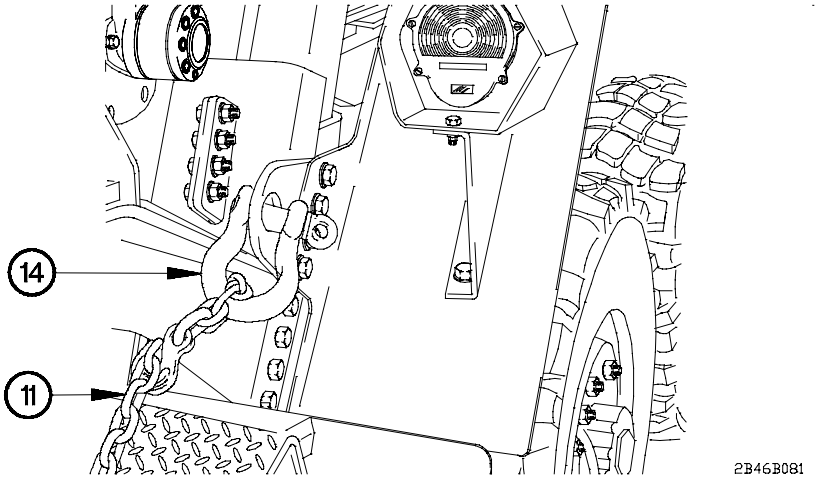

(14) Remove other end of two chains (11) from M1089 rear shackles (14).

2-46. M1008 SERIES TOWING CONNECTION/DISCONNECTION (CONT)

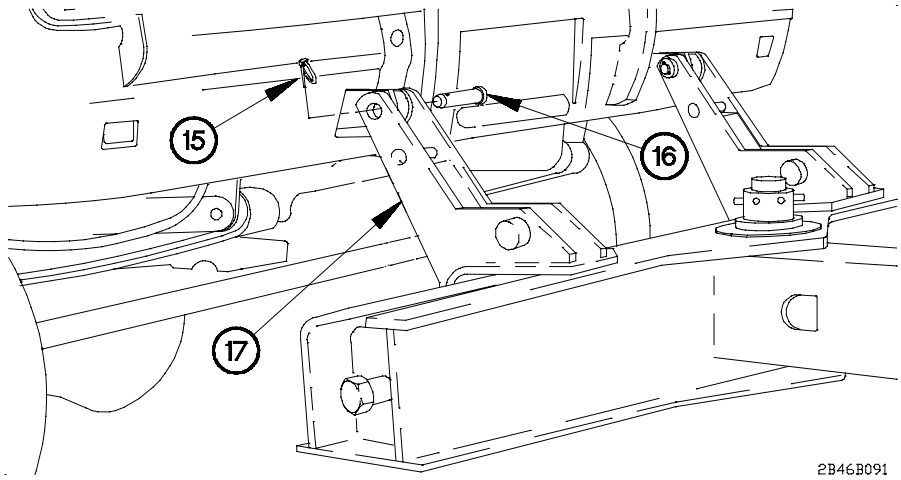

NOTE

Left and right side lift tools are removed from towed vehicle the same way. Right side shown.

(15) Remove two lynch pins (15) and pins (16) from two lift tools (17).

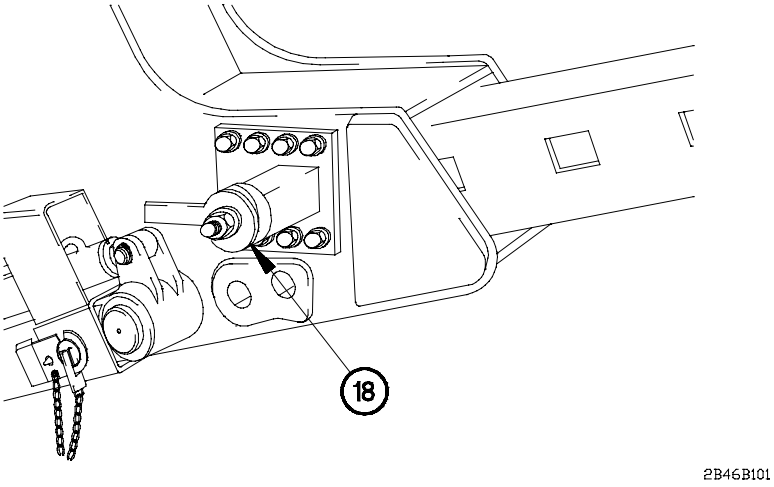

(16) Unlock stinger cam lock (18).

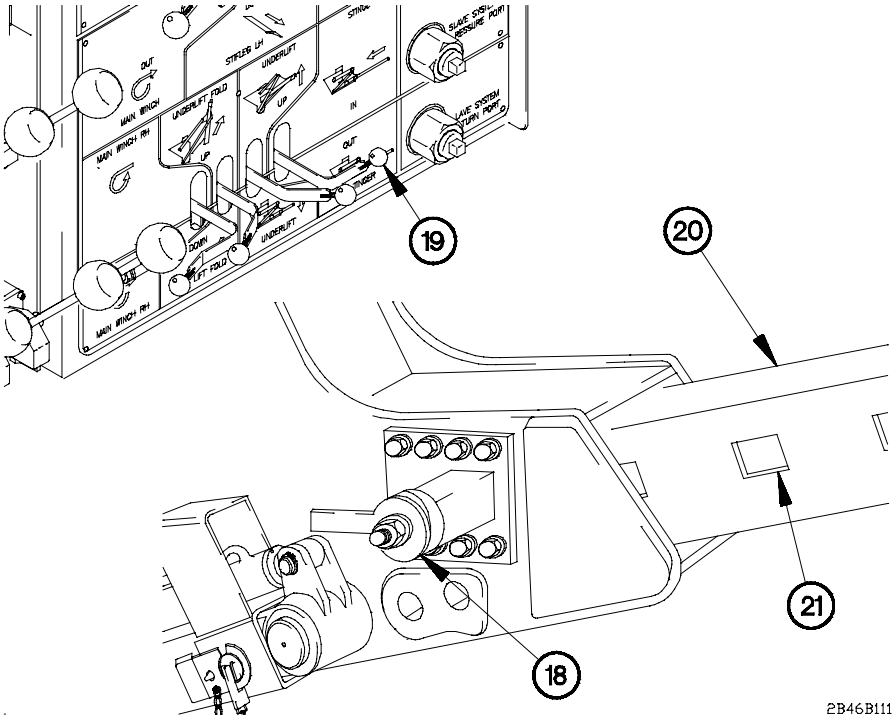

(17) Place STINGER lever (19) to IN position to retract stinger (20) until stinger cam lock (18) is aligned with first hole (21) in stinger.

WARNING

Stinger cam lock must be locked in first rectangular hole on stinger before underlift assembly is folded into its stowed position. Crossbar could shift suddenly. Failure to comply may result in injury to personnel.

(18) Lock stinger cam lock (18).

NOTE

Shackles are attached to M1008 tow eyes using bolts, nuts, and cotter pins that were removed with M1008 shackles.

(19) Install two shackles on M1008 tow eyes (TM 9-2320-289-10).

2-46. M1008 SERIES TOWING CONNECTION/DISCONNECTION (CONT)

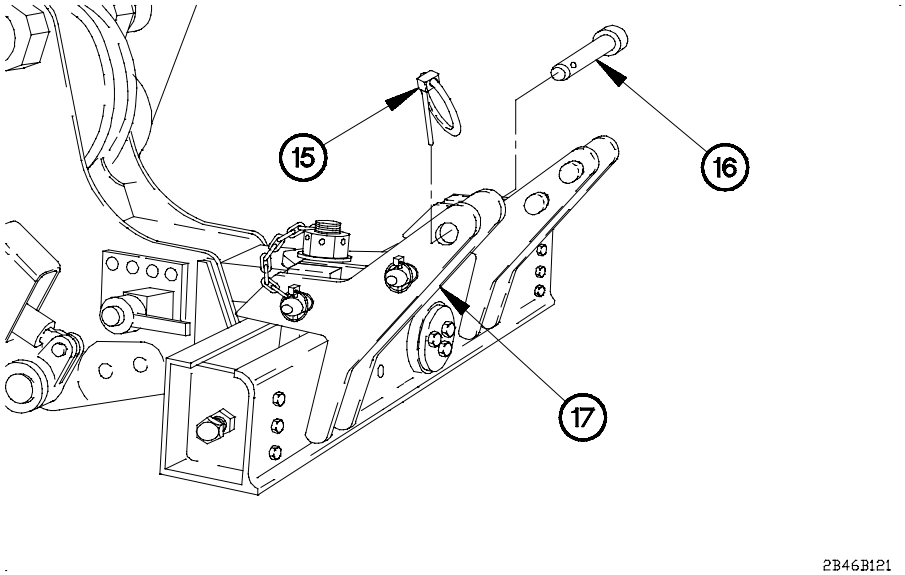

(20) Install two pins (16) and lynch pins (15) in two lift tools (17).

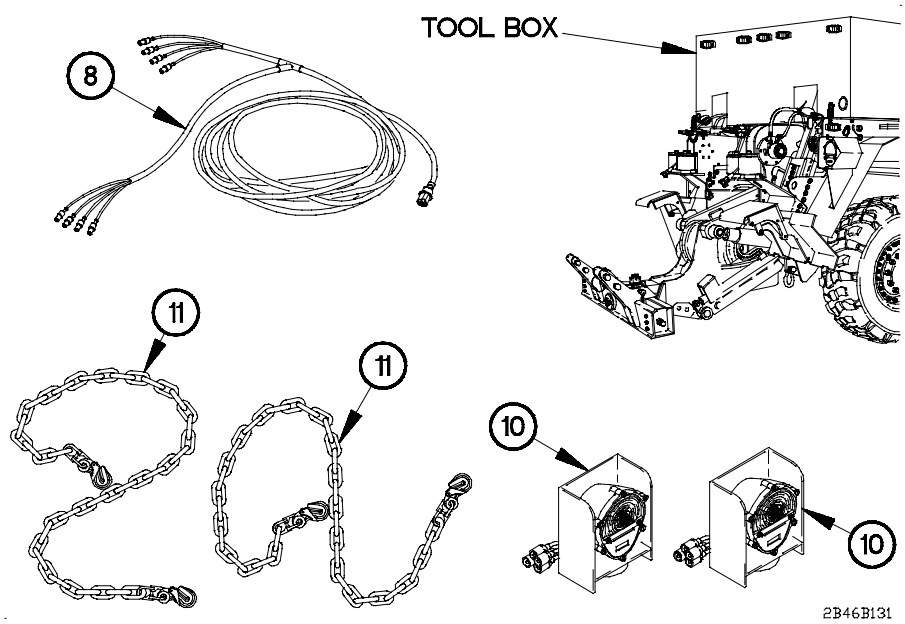

(21) Stow two chains (11), emergency tow lights (10), and tow lights cable (8) in tool box.

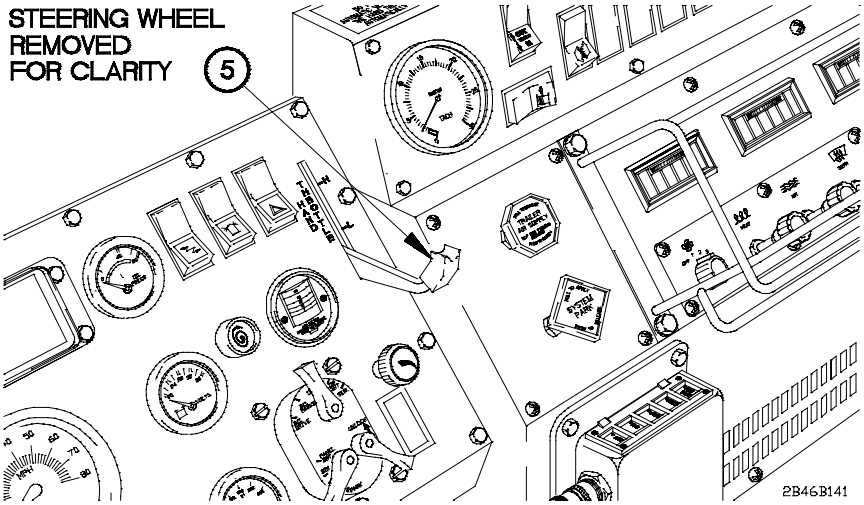

(22) Raise underlift assembly (para 2-44e).

(23) Disconnect WRECKER REMOTE CONTROL (para 2-44c). ■

(24) Set engine speed to idle (750 rpm) by decreasing HAND THROTTLE lever (5) to full down position.

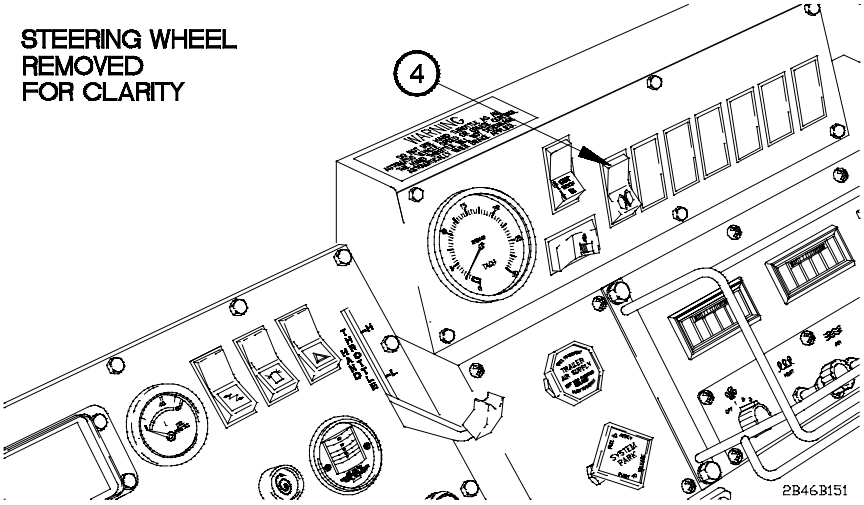

(25) Position PTO switch (4) to off.

(26) Shut down engine (para 2-27f).

(27) Lower and remove two amber warning lights (para 2-74).

2-46. M1008 SERIES TOWING CONNECTION/DISCONNECTION (CONT)

c. Rear Connection.

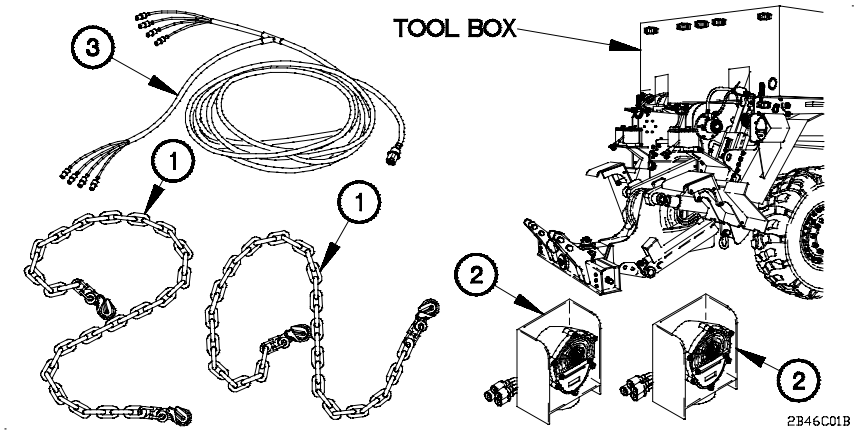

(1) Remove two chains (1), emergency tow lights (2), and tow lights cable (3) from tool box.

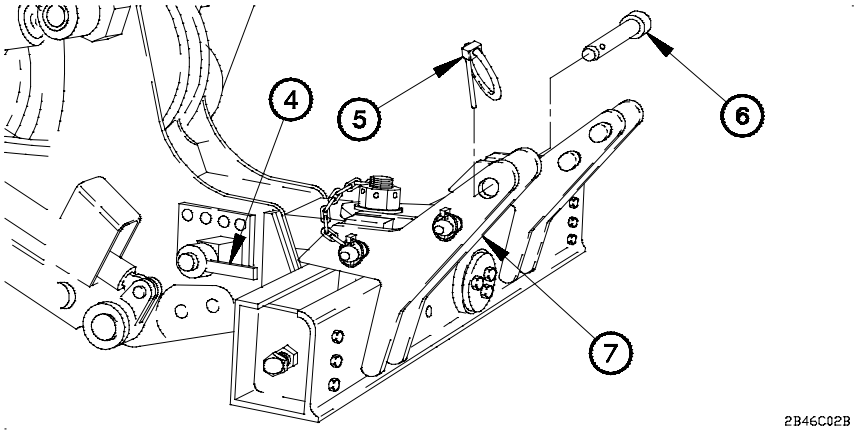

(2) Prepare underlift assembly for operation (para 2-44a).

NOTE

Perform step 3 if assistant is not available to aid in towing connection.

(3) Connect WRECKER REMOTE CONTROL (para 2-44b).

(4) Unlock stinger cam lock (4).

(5) Remove top lynch pins (5) and pins (6) from two lift tools (7).

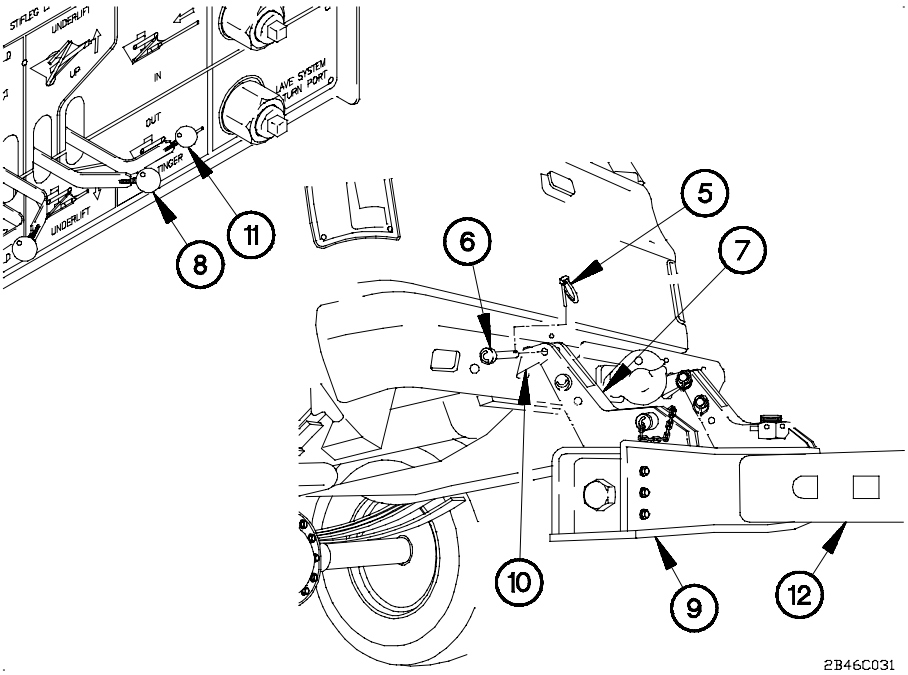

(6) Remove shackles from M1008 tow eyes (TM 9-2320-289-10).

WARNING

Goggles must be worn while operating wrecker control panel. Blowing dust and debris may become airborne while engine is running. Failure to comply may result in injury to personnel.

(7) Place UNDERLIFT lever (8) in UP position to raise crossbar (9) until lift tools (7) align with M1008 tow eyes (10).

(8) Place STINGER lever (11) in OUT position to extend stinger (12) until lift tools (7) align with M1008 tow eyes (10).

NOTE

Left and right side tools are installed on M1008 tow eyes the same way. Right side shown.

(9) Install two lift tools (7) on M1008 tow eyes (10) with two pins (6) and lynch pins (5).

2-46. M1008 SERIES TOWING CONNECTION/DISCONNECTION (CONT)

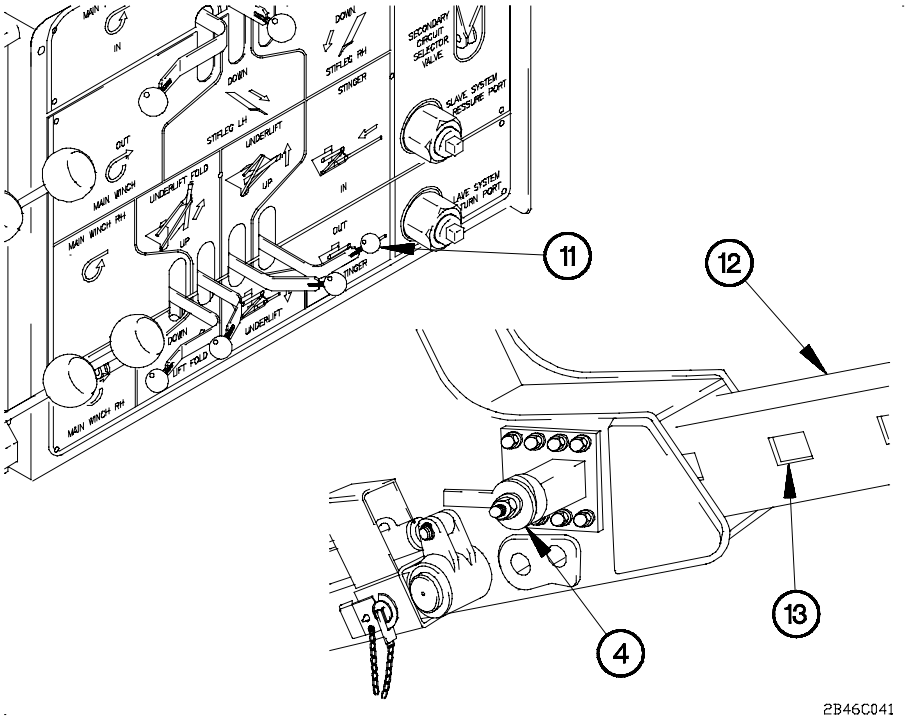

CAUTION

- Stinger cam lock is normally locked in second rectangular hole on stinger when towing M1008. It may be necessary to lock stinger cam lock in third rectangular hole on stinger if components mounted on rear of M1008 interfere with movement of crossbar. Lock stinger cam lock in hole which will allow crossbar to rotate freely. Failure to comply may result in damage to equipment.

- It may be necessary to start with holes 4 or 5 on stinger when recovering a vehicle on uneven ground. Once level ground is reached, lock stinger in second hole. Failure to comply may result in damage to equipment.

(10) Place STINGER lever (11) to IN position to retract stinger (12) until desired stinger cam lock hole (13) is aligned.

(11) Lock stinger cam lock (4).

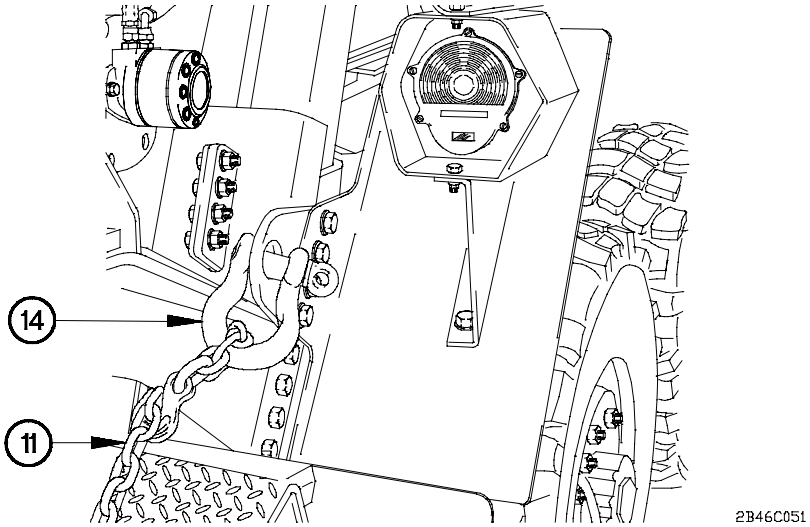

NOTE

Left and right side chains are installed the same way. Right side shown.

(12) Connect one end of two chains (1) to M1089 rear shackles (14).

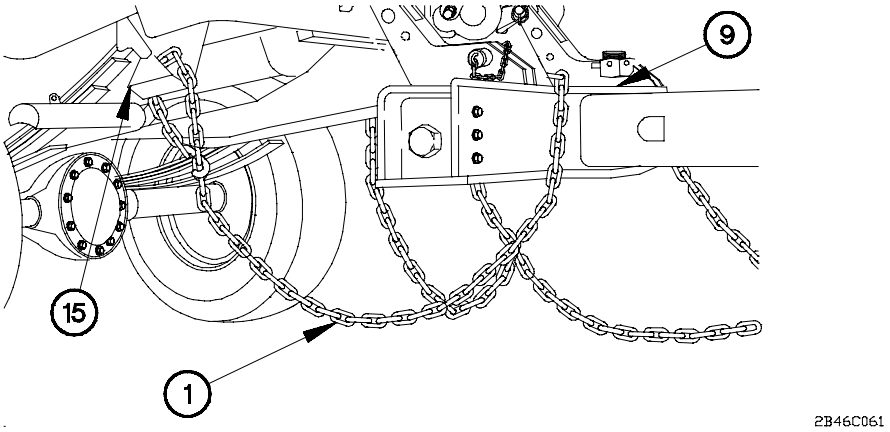

NOTE

Wrap chains around crossbar so that chains are approximately 6-10 in. (15-25 cm) above ground.

(13) Wrap two chains (1) around crossbar (9).

(14) Connect other end of two chains (1) around M1008 rear leaf spring supports (15).

2-46. M1008 SERIES TOWING CONNECTION/DISCONNECTION (CONT)

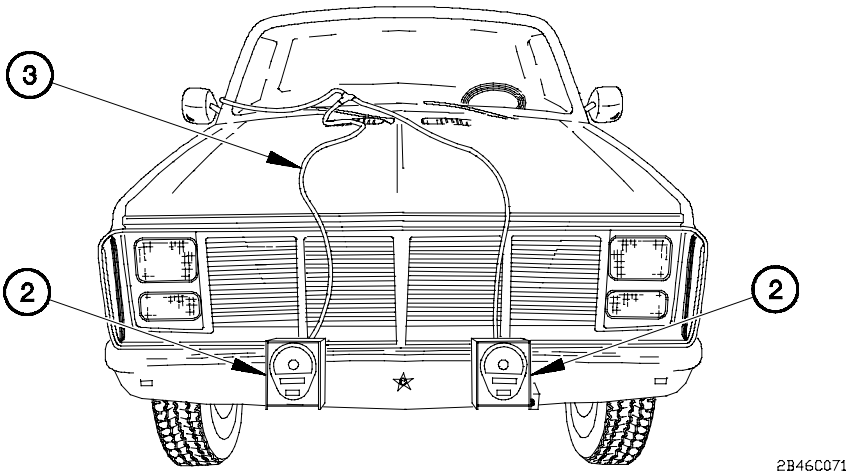

(15) Position two emergency tow lights (2) on front of M1008.

(16) Connect tow lights cable (3) to two emergency tow lights (2).

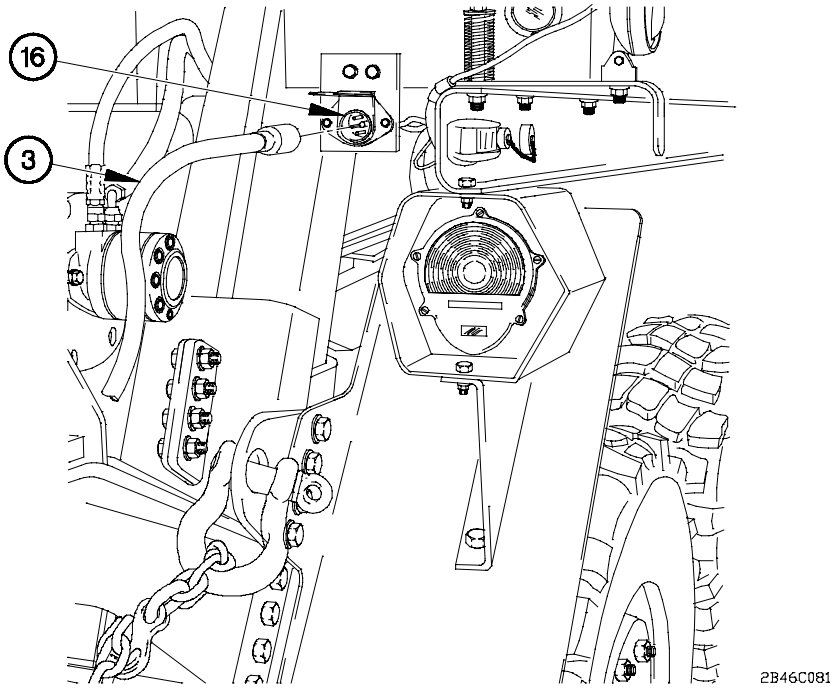

(17) Route tow lights cable (3) along top of M1008.

(18) Connect tow lights cable (3) to M1089 rear electrical connector (16).

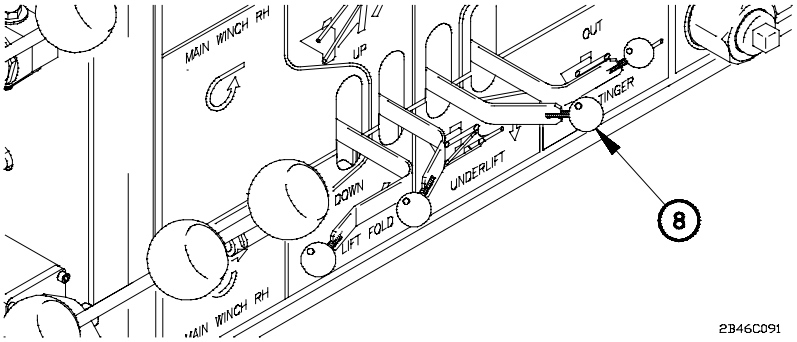

CAUTION

Ensure all loose equipment is secure on M1008. Failure to comply may result in damage to equipment.

(19) Prepare M1008 for towing (TM 9-2320-289-10).

WARNING

Keep personnel clear of underlift assembly and disabled vehicle when raising. Disabled vehicle could fall suddenly. Failure to comply may result in serious injury or death to personnel.

(20) Place UNDERLIFT lever (8) in UP position to raise M1008 until wheels are approximately 16 in. (41 cm) off ground.

(21) Disconnect WRECKER REMOTE CONTROL (para 2-44c). ■

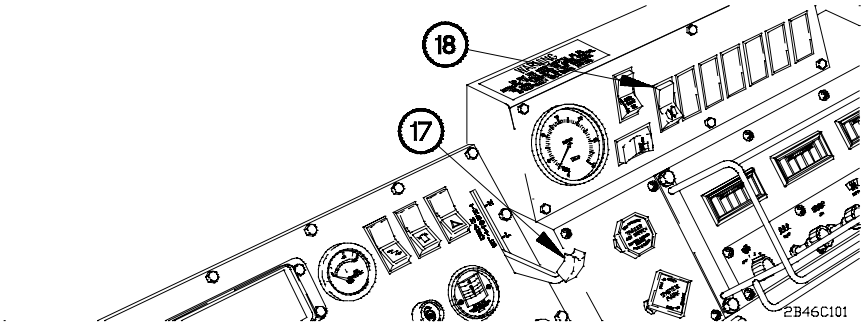

(22) Set engine speed to idle (750 rpm) by decreasing HAND THROTTLE lever (17) to full down position.

(23) Position PTO switch (18) to off.

2-46. M1008 SERIES TOWING CONNECTION/DISCONNECTION (CONT)

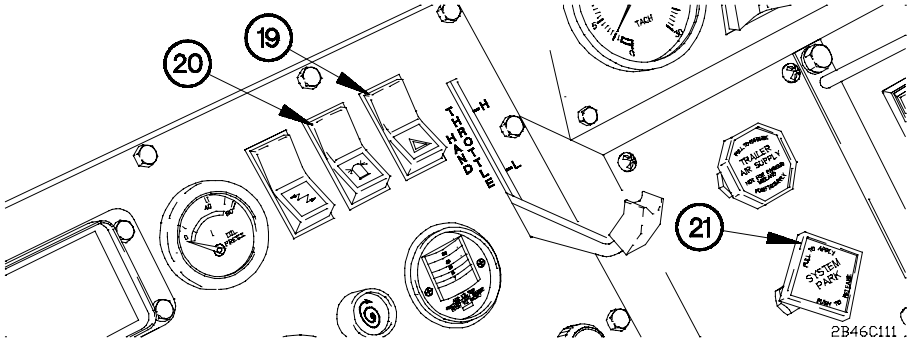

(24) Install and raise two amber warning lights (para 2-74).

(25) Turn on service drive lights (para 2-27c).

(26) Position hazard lights switch (19) to on.

(27) Position amber warning lights switch (20) to on.

(28) Push in SYSTEM PARK control (21).

(29) Set transmission in gear (para 2-27e).

WARNING

M1089 should not be operated at speeds over 15 mph (24 km/h) when towing, except on paved roads when Operator determines that terrain conditions allow safe operation. The following are maximum speeds for safe operation:

TERRAIN CONDITION	MAXIMUM SPEED
on road (level)	35 mph (56 km/h)
on road (hilly)	30 mph (48 km/h)
off road	15 mph (24 km/h)

Failure to comply may result in serious injury or death to personnel or damage to equipment.

(30) Transport M1008.

d. Rear Disconnection.

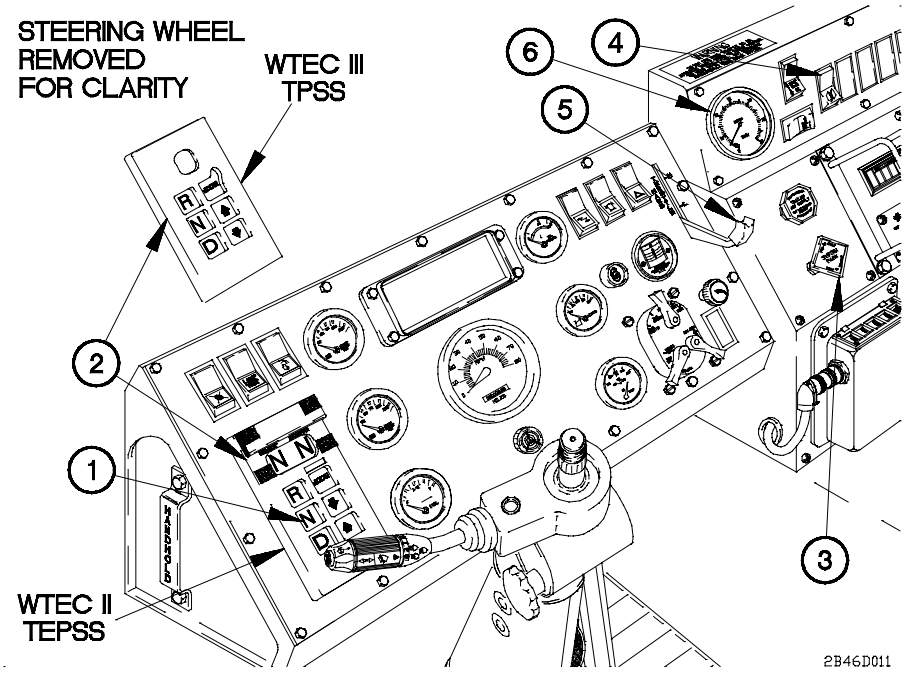

(1) Start engine (para 2-27a or b).

(2) Press N (Neutral) button (1) on WTEC II TEPSS (2) or WTEC III TPSS (2).

(3) Pull out SYSTEM PARK control (3).

(4) Position PTO switch (4) to on.

CAUTION

Keep tachometer within 1,250-1,450 rpm when Power Take-Off (PTO) is engaged. Failure to comply may result in damage to equipment.

NOTE

In the event of a tachometer failure a HAND THROTTLE lever positioned to L is approximately 1,250-1,450 rpm.

(5) Set engine speed by increasing HAND THROTTLE lever (5) until tachometer (6) reads 1,250-1,450 rpm.

2-46. M1008 SERIES TOWING CONNECTION/DISCONNECTION (CONT)

NOTE

Perform step 6 if assistant is not available to aid in towing connection.

(6) Connect WRECKER REMOTE CONTROL (para 2-44b).

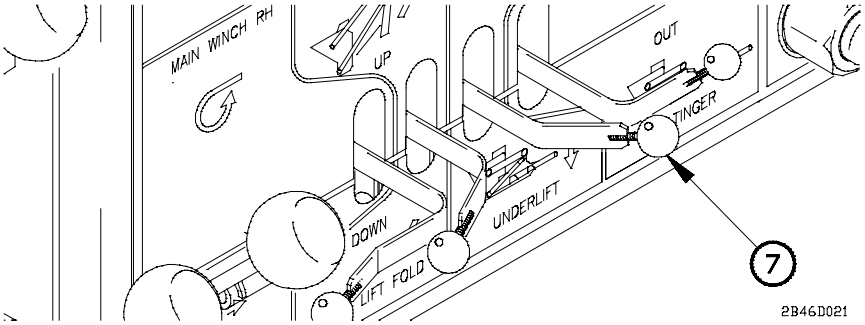

WARNING

- **Keep personnel clear of underlift assembly and disabled vehicle when raising. Disabled vehicle could fall suddenly. Failure to comply may result in serious injury or death to personnel.**
- **Goggles must be worn while operating wrecker control panel. Blowing dust and debris may become airborne while engine is running. Failure to comply may result in injury to personnel.**

(7) Place UNDERLIFT lever (7) in DOWN position to lower M1008 until wheels are in firm contact with ground.

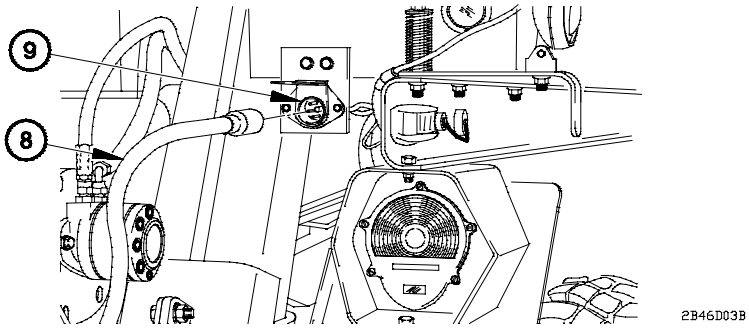

(8) Set parking brake on M1008 (TM 9-2320-289-10).

(9) Disconnect tow lights cable (8) from M1089 rear electrical connector (9).

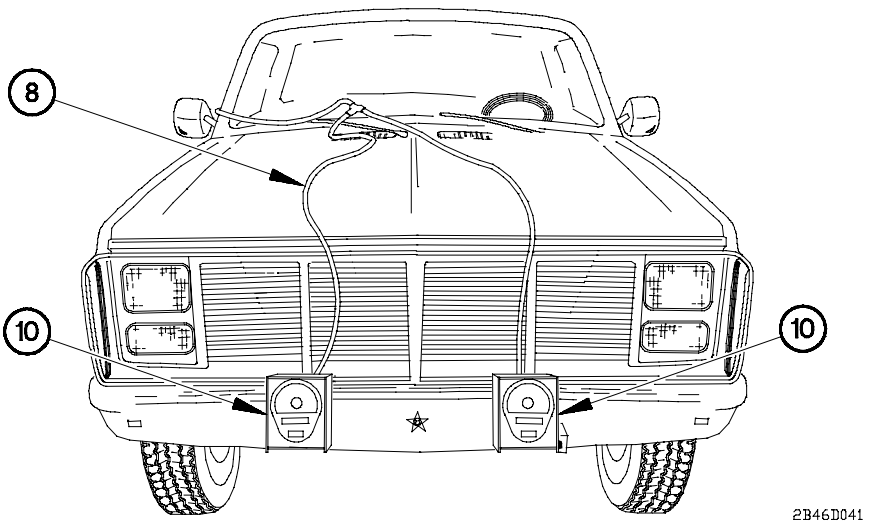

(10) Disconnect tow lights cable (8) from two emergency tow lights (10).

(11) Remove two emergency tow lights (10) from front of M1008.

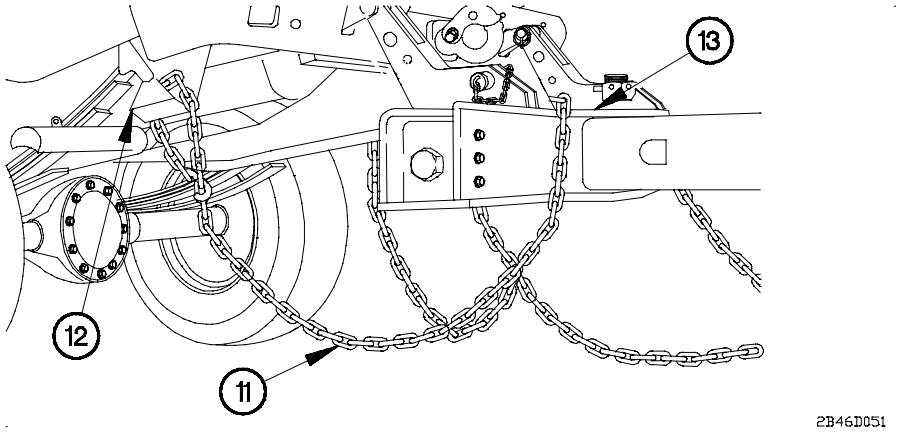

NOTE

Left and right side chains are removed the same way. Right side shown.

(12) Remove two chains (11) from M1008 rear leaf spring supports (12).

(13) Remove two chains (11) from crossbar (13).

2-46. M1008 SERIES TOWING CONNECTION/DISCONNECTION (CONT)

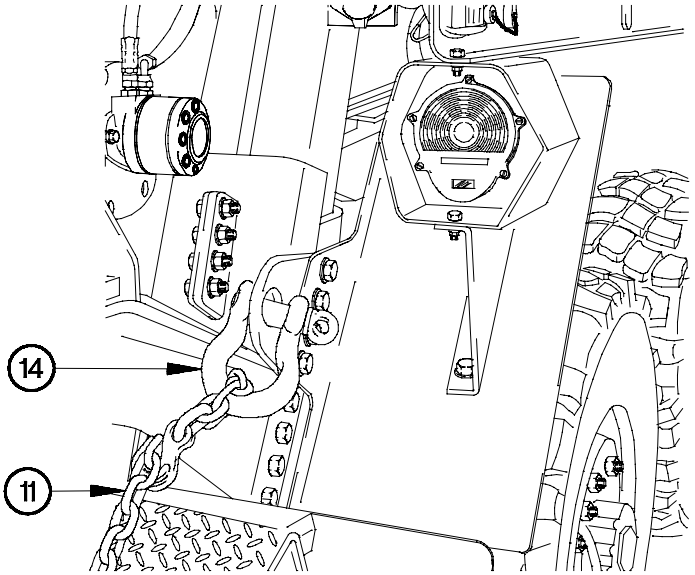

(14) Remove other end of two chains (11) from M1089 rear shackles (14).

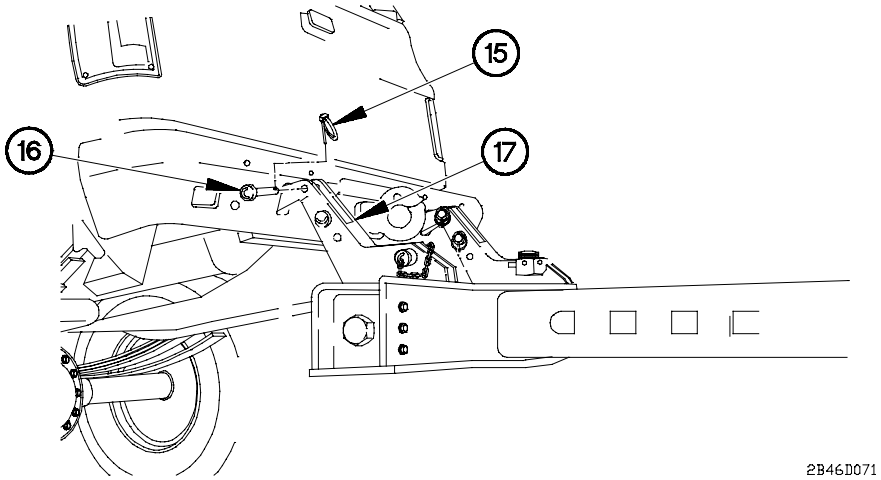

NOTE

Left and right side lift tools are removed the same way. Right side shown.

(15) Remove two lynch pins (15) and pins (16) from two lift tools (17).

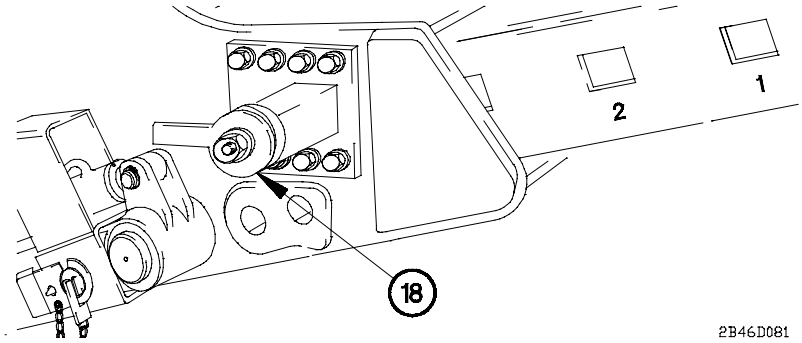

(16) Unlock stinger cam lock (18).

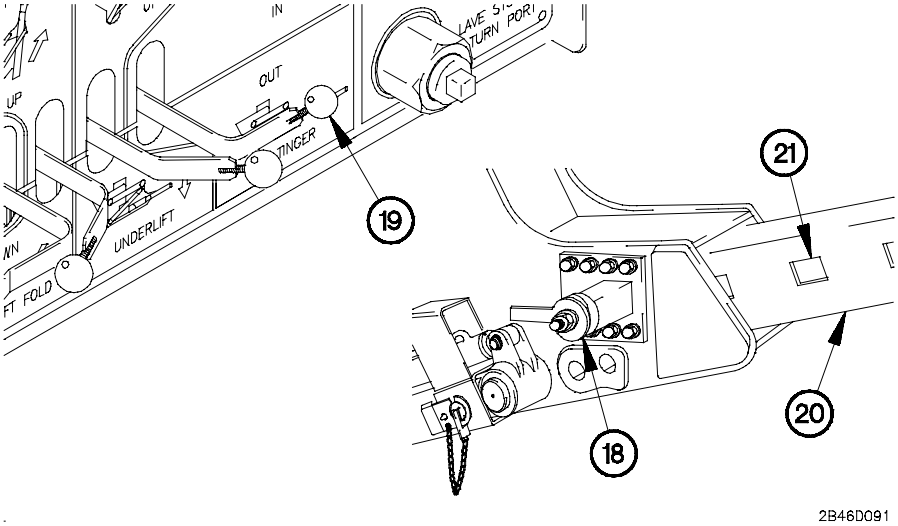

(17) Place STINGER lever (19) to IN position to retract stinger (20) until stinger cam lock (18) is aligned with first hole (21) in stinger.

WARNING

Stinger cam lock must be locked in first rectangular hole on stinger before underlift assembly is folded into its stowed position. Crossbar could shift suddenly. Failure to comply may result in injury to personnel.

(18) Lock stinger cam lock (18).

NOTE

Shackles are attached to M1008 tow eyes using bolts, nuts, and cotter pins that were removed with M1008 shackles.

(19) Install shackles on M1008 tow eyes (TM 9-2320-289-10).

2-46. M1008 SERIES TOWING CONNECTION/DISCONNECTION (CONT)

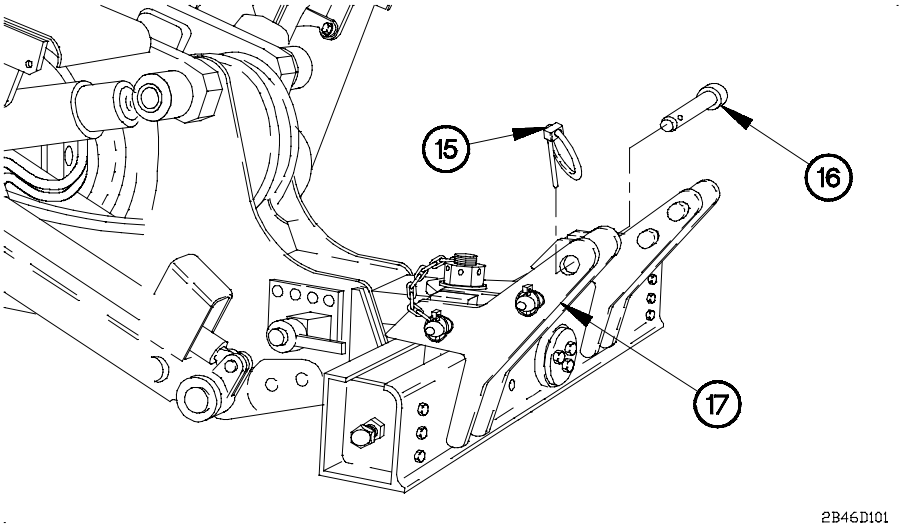

(20) Install two pins (16) and lynch pins (15) in two lift tools (17).

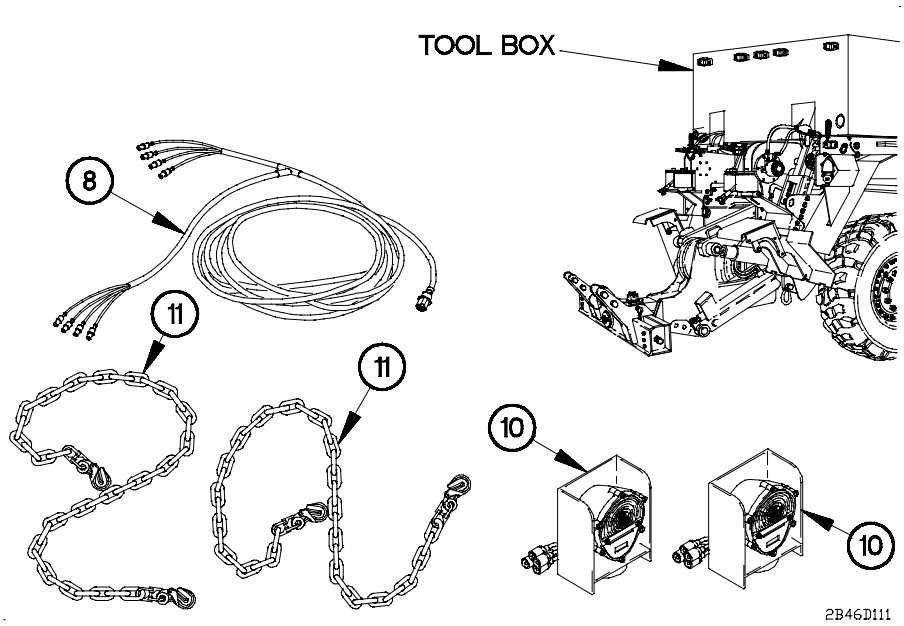

(21) Stow two chains (11), emergency tow lights (10), and tow lights cable (8) in tool box.

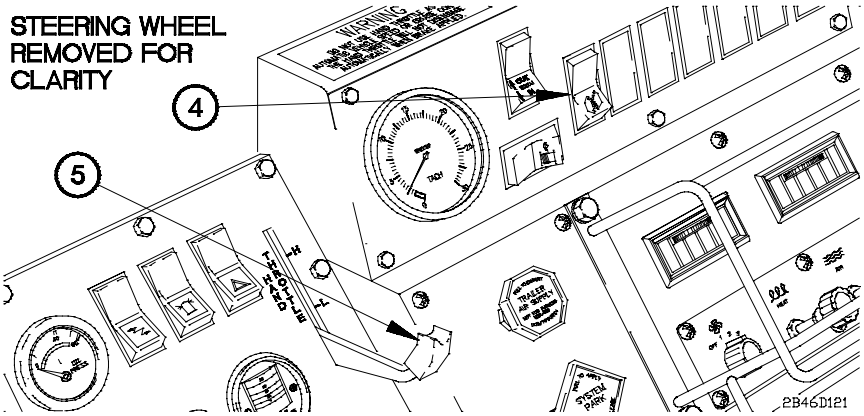

(22) Raise underlift assembly (para 2-44e).

(23) Disconnect WRECKER REMOTE CONTROL (para 2-44c). ■

(24) Set engine speed to idle (750 rpm) by decreasing HAND THROTTLE lever (5) to full down position.

(25) Position PTO switch (4) to off.

(26) Shut down engine (para 2-27f).

(27) Lower and remove two amber warning lights (para 2-74).

2-47. M35 SERIES TOWING CONNECTION/DISCONNECTION

a. Front Connection.

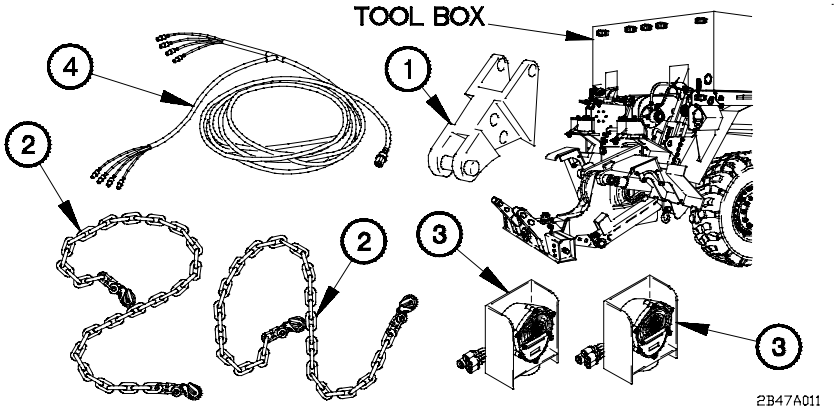

(1) Remove two top bumper lift tools (1), chains (2), emergency tow lights (3), and tow lights cable (4) from tool box.

2-47. M35 SERIES TOWING CONNECTION/DISCONNECTION (CONT)

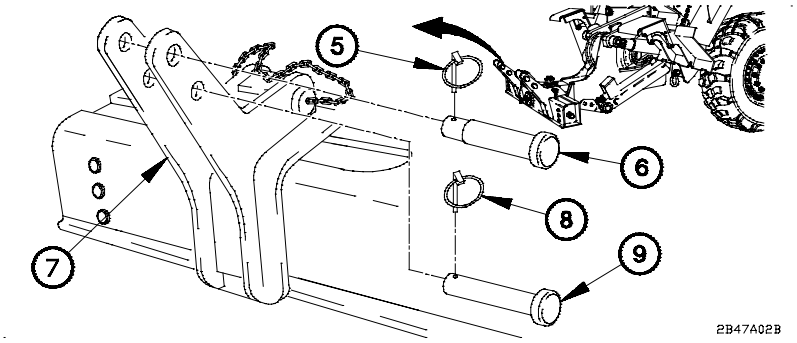

(2) Prepare underlift assembly for operation (para 2-44a).

NOTE

Perform step 3 if assistant is not available to aid in towing connection.

(3) Connect WRECKER REMOTE CONTROL (para 2-44b).

(4) Remove two lynch pins (5) and large pins (6) from two lift tools (7).

(5) Remove two lynch pins (8) and small pins (9) from two lift tools (7).

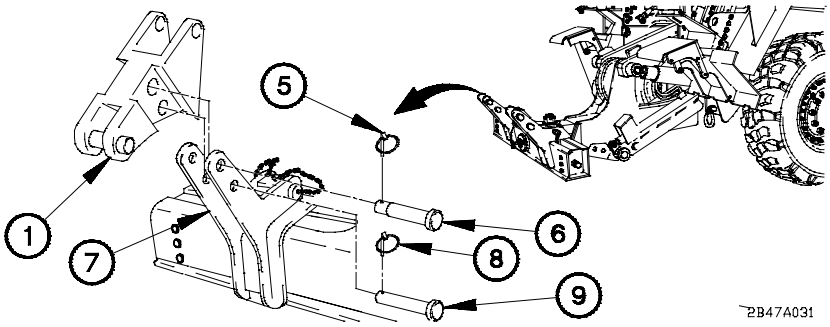

NOTE

- Top bumper lift tools are installed with small pin holes facing toward rear of crossbar.
- Left and right side top bumper lift tools are installed on lift tools the same way. Left side shown.

(6) Install two top bumper lift tools (1) on two lift tools (7) with large pins (6) and lynch pins (5).

(7) Install small pins (9) and lynch pins (8) in two top bumper lift tools (1).

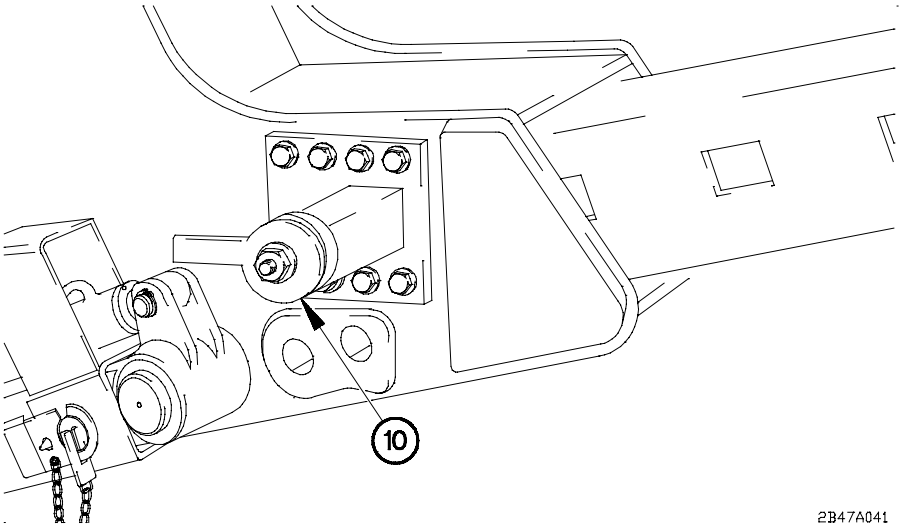

(8) Unlock stinger cam lock (10).

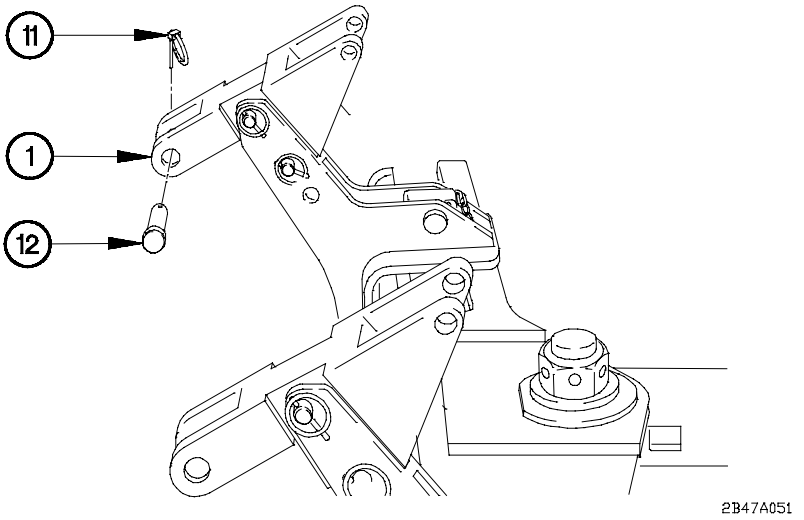

(9) Remove shackles from M35 tow eyes (TM 9-2320-361-10).

(10) Remove two lynch pins (11) and pins (12) from two top bumper lift tools (1).

2-47. M35 SERIES TOWING CONNECTION/DISCONNECTION (CONT)

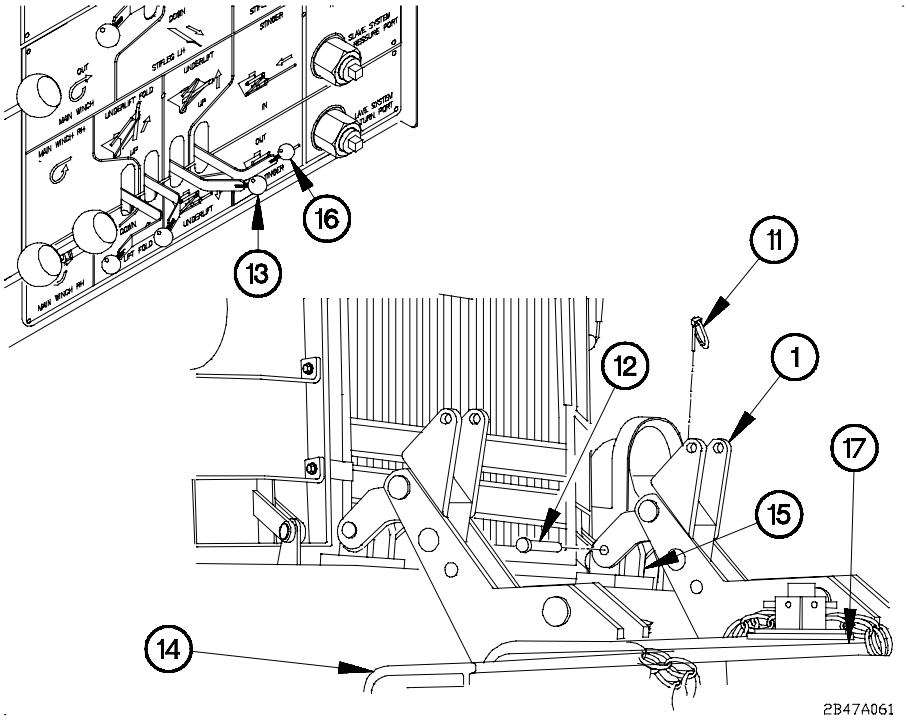

WARNING

Goggles must be worn while operating wrecker control panel. Blowing dust and debris may become airborne while engine is running. Failure to comply may result in injury to personnel.

(11) Place UNDERLIFT lever (13) to UP position to raise crossbar (14) until top bumper lift tools (1) are aligned with M35 tow eyes (15).

(12) Place STINGER lever (16) to OUT position to extend stinger (17) until top bumper lift tools (1) are aligned with M35 tow eyes (15).

NOTE

Left and right side top bumper lift tools are installed on M35 tow eyes the same way. Left side shown.

(13) Install two top bumper lift tools (1) on M35 tow eyes (15) with two pins (12) and lynch pins (11).

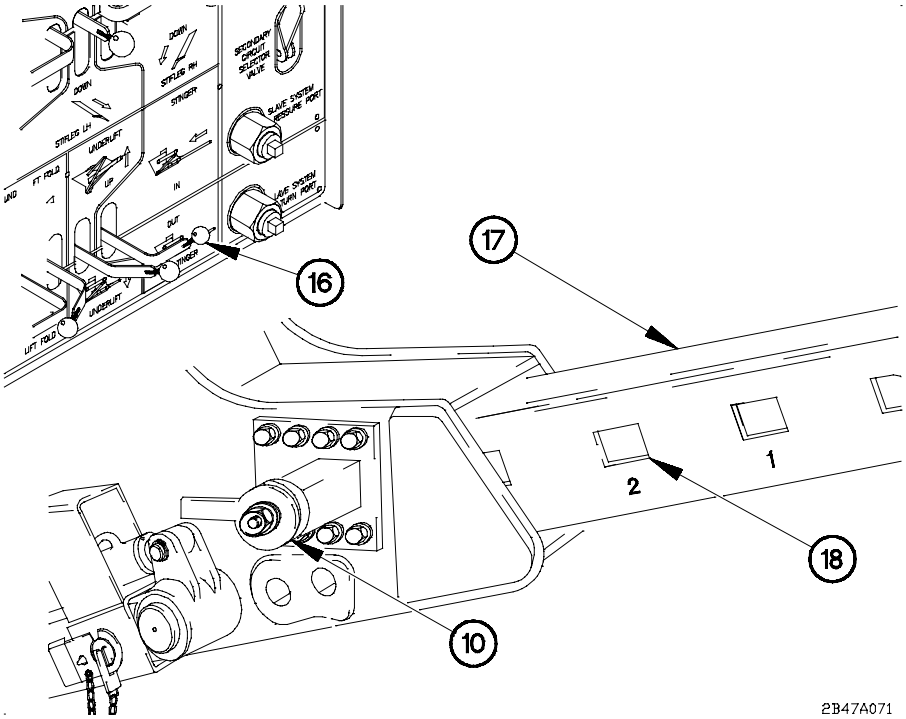

CAUTION

- Stinger cam lock is normally locked in second rectangular hole on stinger when towing an M35. It may be necessary to lock stinger cam lock in third rectangular hole on stinger if winches or other components mounted on front of M35 interfere with movement of crossbar. Lock stinger cam lock in hole which will allow crossbar to rotate freely. Failure to comply may result in damage to equipment.

- It may be necessary to start with holes 4 or 5 on stinger when recovering a vehicle on uneven ground. Once level ground is reached, lock stinger in second hole. Failure to comply may result in damage to equipment.

(14) Place STINGER lever (16) to IN position to retract stinger (17) until desired stinger cam lock hole (18) is aligned.

(15) Lock stinger cam lock (10).

2-47. M35 SERIES TOWING CONNECTION/DISCONNECTION (CONT)

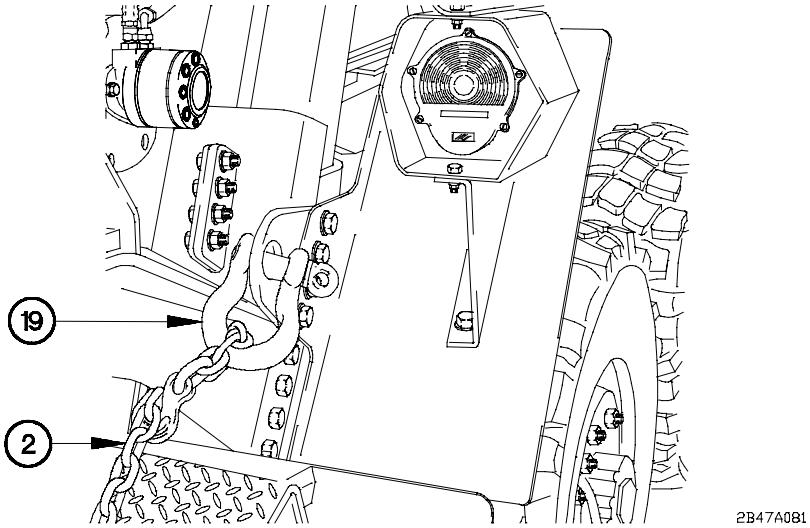

NOTE

Left and right side chains are installed the same way. Right side shown.

(16) Connect one end of two chains (2) to M1089 rear shackles (19).

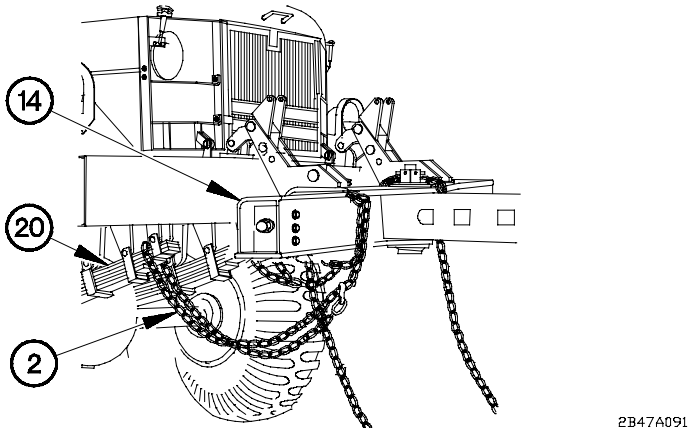

NOTE

Wrap chains around crossbar so that chains are approximately 6-10 in. (15-25 cm) above ground.

(17) Wrap two chains (2) around crossbar (14).

(18) Connect other end of two chains (2) around M35 front leaf springs (20).

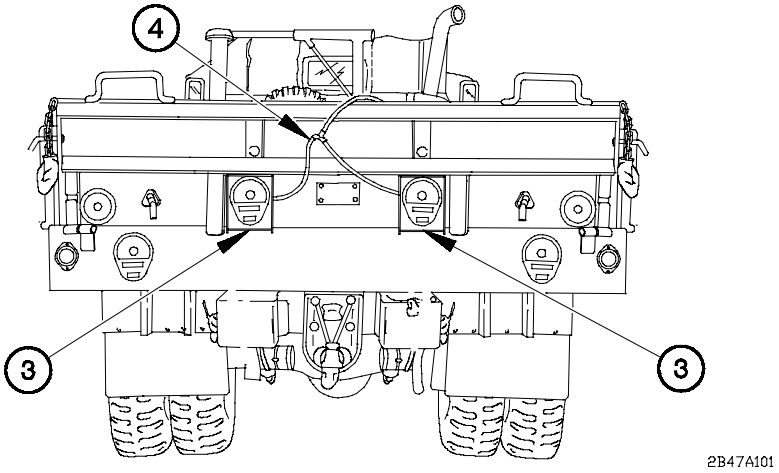

(19) Position two emergency tow lights (3) on rear of M35.

(20) Connect tow lights cable (4) to two emergency tow lights (3).

(21) Route tow lights cable (4) along top of M35.

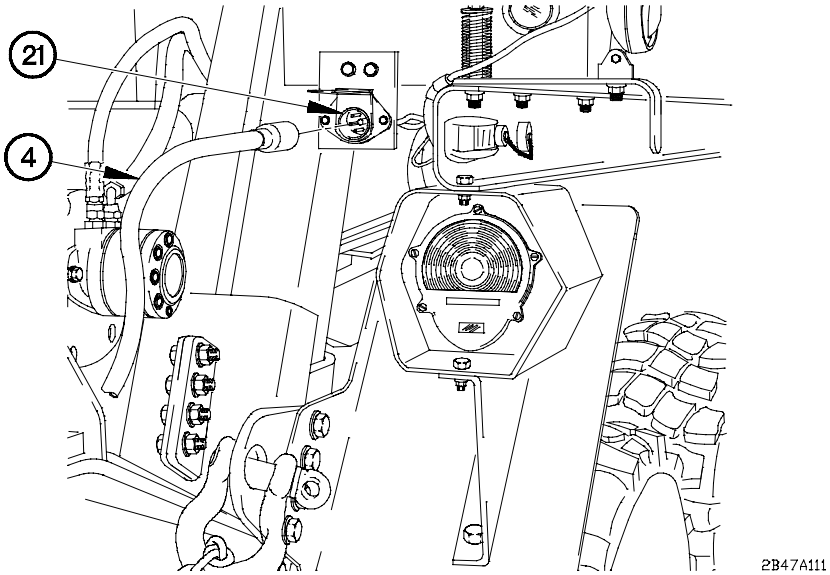

(22) Connect tow lights cable (4) to M1089 rear electrical connector (21).

2-47. M35 SERIES TOWING CONNECTION/DISCONNECTION (CONT)

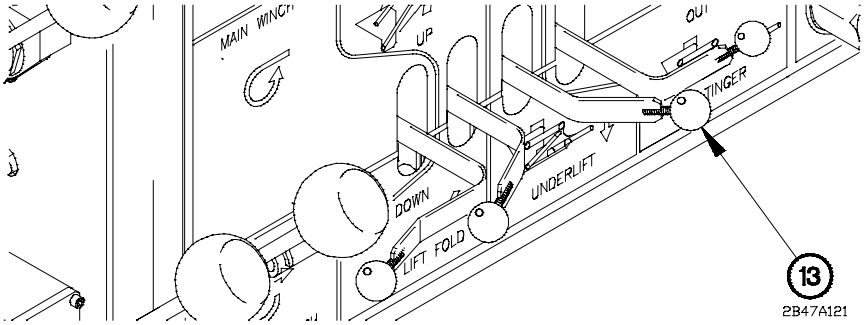

CAUTION

All loose equipment must be secure on M35. Failure to comply may result in damage to equipment.

(23) Prepare M35 for towing (TM 9-2320-361-10).

WARNING

Keep personnel clear of underlift assembly and disabled vehicle when raising. Disabled vehicle could fall suddenly. Failure to comply may result in serious injury or death to personnel.

(24) Place UNDERLIFT lever (13) to UP position to raise M35 until wheels are approximately 16 in. (41 cm) off ground.

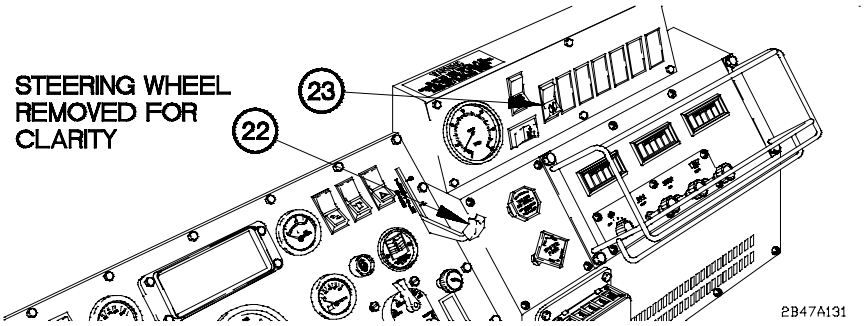

(25) Disconnect WRECKER REMOTE CONTROL (para 2-44c).

(26) Set engine speed to idle (750 rpm) by decreasing HAND THROTTLE lever (22) to full down position.

(27) Position PTO switch (23) to off.

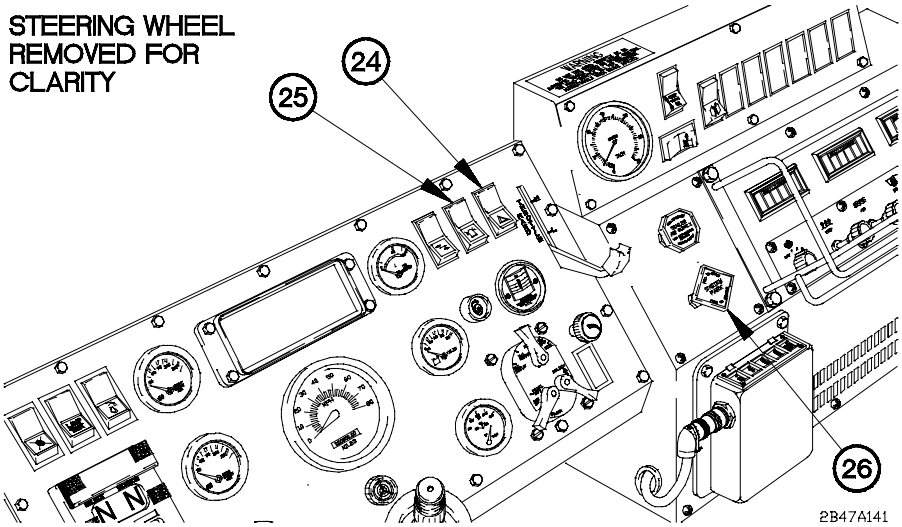

(28) Install and raise two amber warning lights (para 2-74).

(29) Turn on service drive lights (para 2-27c).

(30) Position hazard lights switch (24) to on.

(31) Position amber warning lights switch (25) to on.

(32) Push in SYSTEM PARK control (26).

(33) Set transmission in gear (para 2-27e).

WARNING

M1089 should not be operated at speeds over 15 mph (24 km/h) when towing, except on paved roads when Operator determines that terrain conditions allow safe operation. The following are maximum speeds for safe operation:

TERRAIN CONDITION	MAXIMUM SPEED
on road (level)	35 mph (56 km/h)
on road (hilly)	30 mph (48 km/h)
off road	15 mph (24 km/h)

Failure to comply may result in serious injury or death to personnel or damage to equipment.

(34) Transport M35.

2-47. M35 SERIES TOWING CONNECTION/DISCONNECTION (CONT)

b. Front Disconnection.

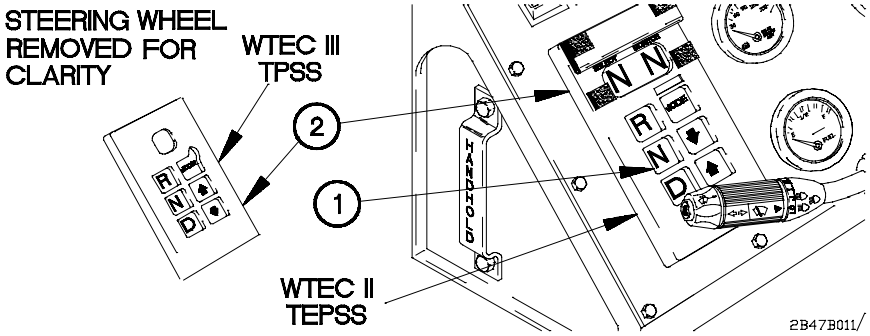

(1) Start engine (para 2-27a or b).

(2) Press N (Neutral) button (1) on WTEC II TEPSS (2) or WTEC III TPSS (2).

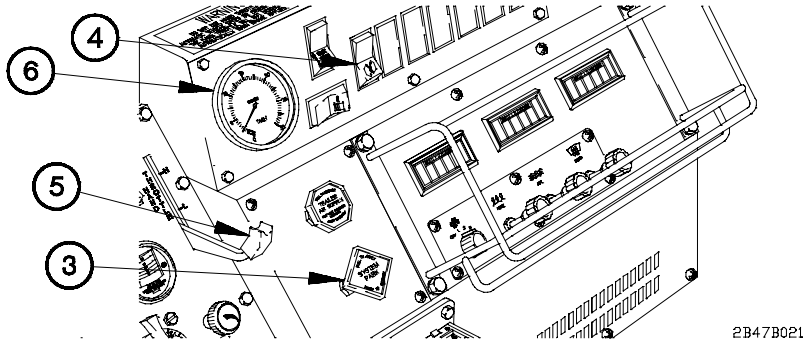

(3) Pull out SYSTEM PARK control (3).

(4) Position PTO switch (4) to on.

CAUTION

- Keep tachometer within 1,250-1,450 rpm when Power Take-Off (PTO) is engaged. Do not exceed 1,450 rpm. Failure to comply may result in damage to equipment.

- In the event of a tachometer failure a HAND THROTTLE lever positioned to L is approximately 1,250-1,450 rpm.

(5) Set engine speed by increasing HAND THROTTLE lever (5) until tachometer (6) reads 1,250-1,450 rpm.

NOTE

Perform step 6 if assistant is not available to aid in towing connection.

(6) Connect WRECKER REMOTE CONTROL (para 2-43b).

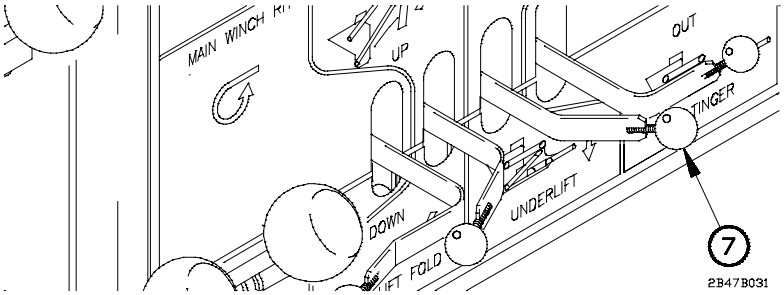

WARNING

- **Keep personnel clear of underlift assembly and disabled vehicle when raising. Disabled vehicle could fall suddenly. Failure to comply may result in serious injury or death to personnel.**

- **Goggles must be worn while operating wrecker control panel. Blowing dust and debris may become airborne while engine is running. Failure to comply may result in injury to personnel.**

(7) Position UNDERLIFT lever (7) to DOWN to lower M35 until wheels are in firm contact with ground.

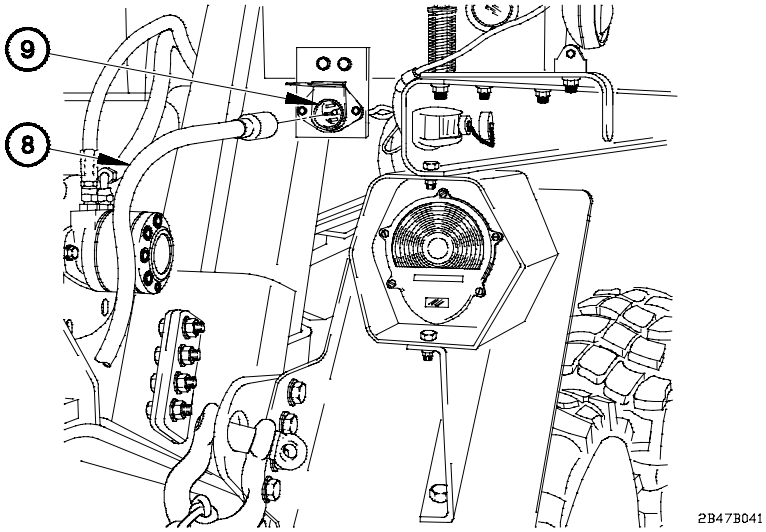

(8) Set parking brake on M35 (TM 9-2320-361-10).

(9) Disconnect tow lights cable (8) from M1089 rear electrical connector (9).

2-47. M35 SERIES TOWING CONNECTION/DISCONNECTION (CONT)

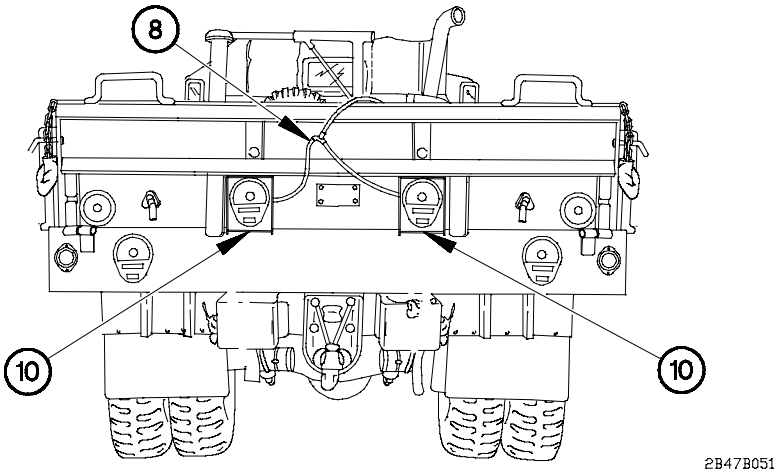

(10) Disconnect tow lights cable (8) from two emergency tow lights (10).

(11) Remove two emergency tow lights (10) from rear of M35.

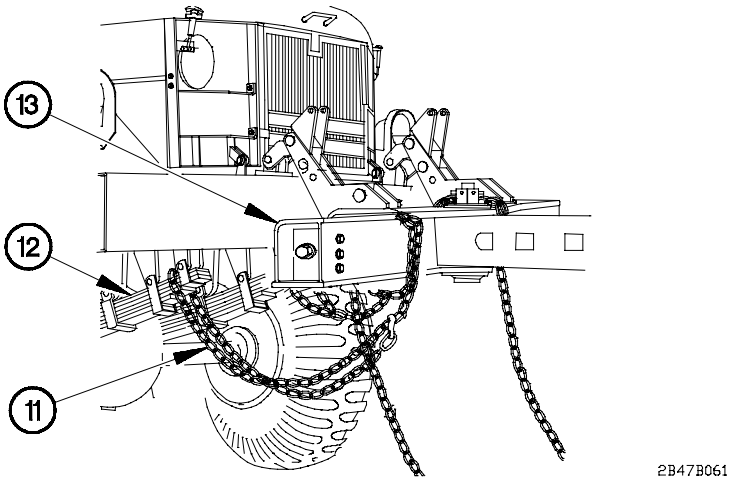

NOTE

Left and right side chains are removed the same way. Right side shown.

(12) Remove two chains (11) from M35 front leaf springs (12).

(13) Remove two chains (11) from crossbar (13).

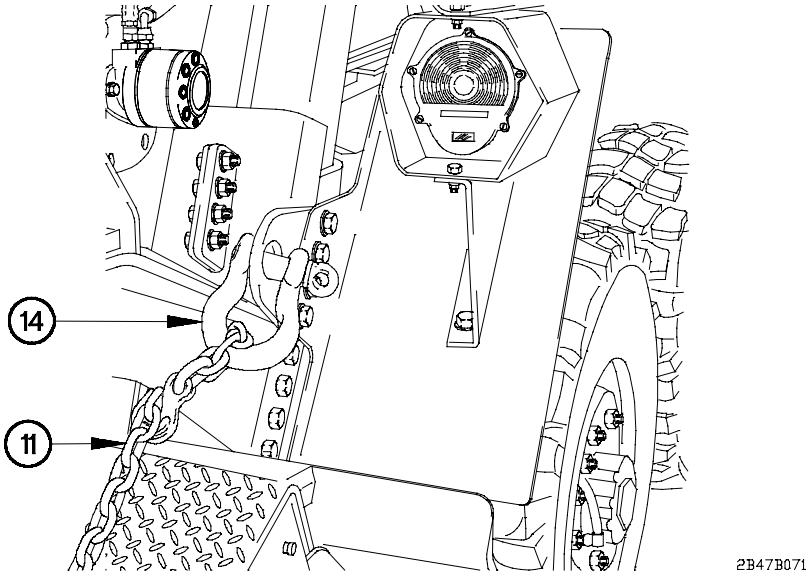

(14) Remove other end of two chains (11) from M1089 rear shackles (14).

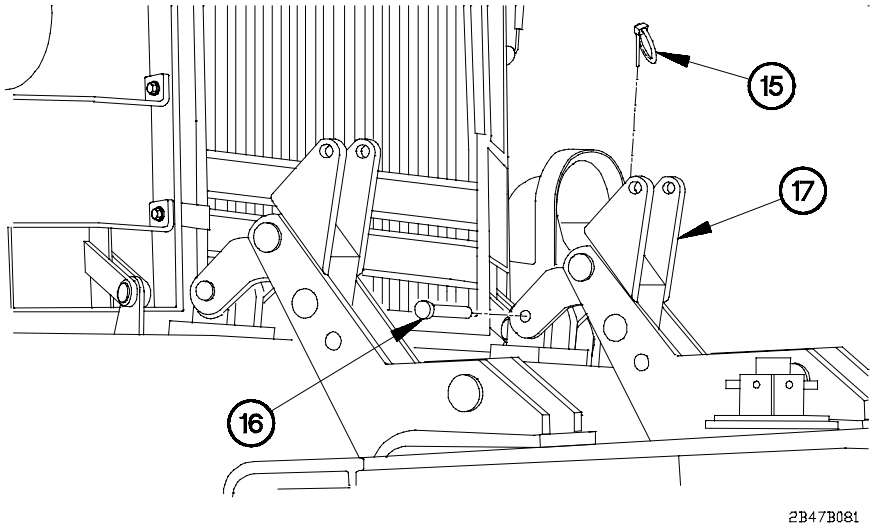

NOTE

Left and right side top bumper lift tools are removed from towed vehicle the same way. Left side shown.

(15) Remove two lynch pins (15) and pins (16) from two top bumper lift tools (17).

2-47. M35 SERIES TOWING CONNECTION/DISCONNECTION (CONT)

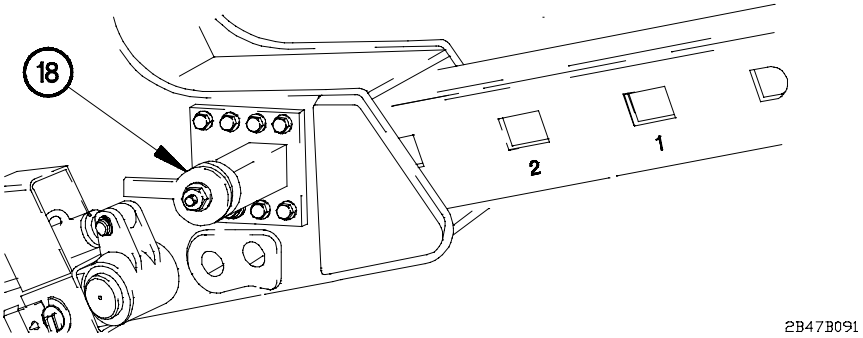

(16) Unlock stinger cam lock (18).

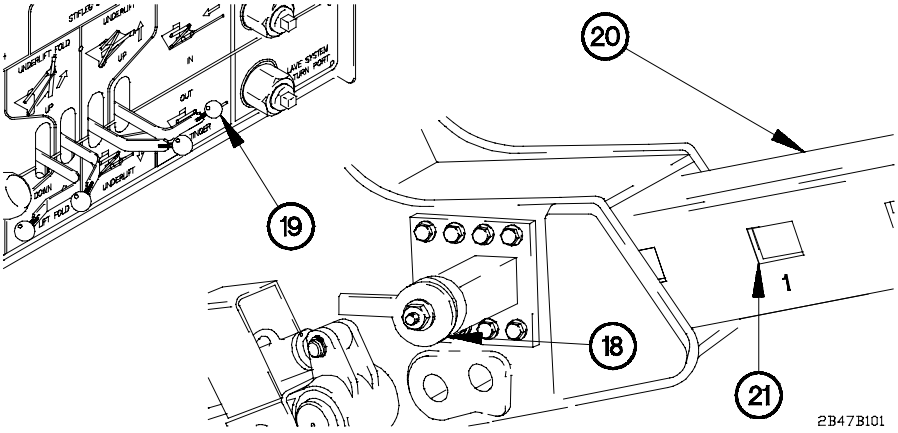

(17) Place STINGER lever (19) to IN position to retract stinger (20) until stinger cam lock (18) is aligned with first hole (21) in stinger.

WARNING

Stinger cam lock must be locked in first rectangular hole on stinger before underlift assembly is folded into its stowed position. Crossbar could shift suddenly. Failure to comply may result in injury to personnel.

(18) Lock stinger cam lock (18).

NOTE

Shackles are attached to M35 tow eyes using bolts, nuts, and cotter pins that were removed with M35 shackles.

(19) Install shackles on M35 tow eyes (TM 9-2320-361-10).

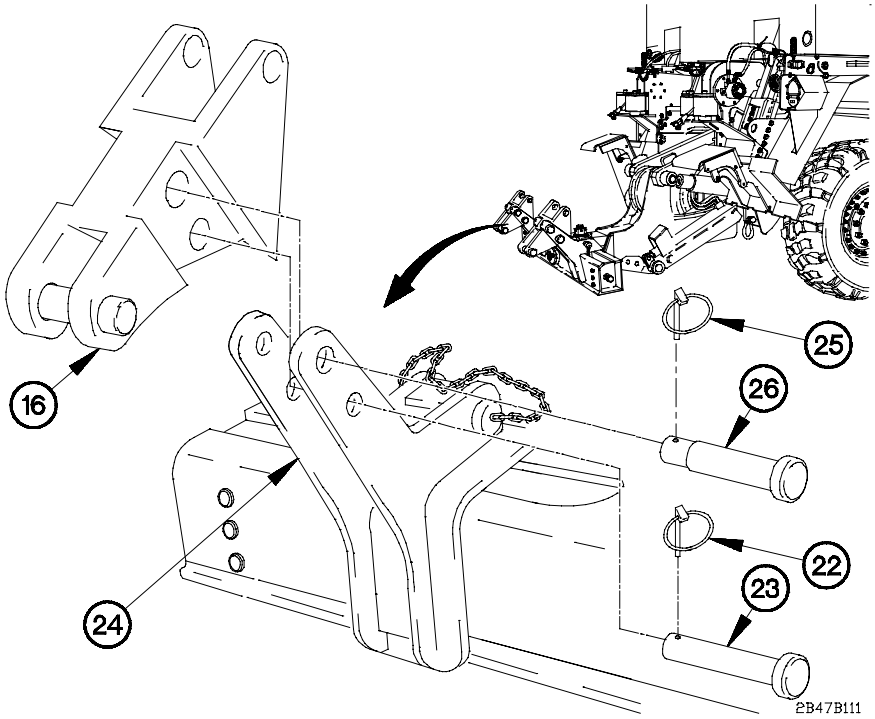

NOTE

Left and right side top bumper lift tools are removed from lift tools the same way. Left side shown.

(20) Remove two lynch pins (22) and small pins (23) from two lift tools (24).

(21) Remove two lynch pins (25), large pins (26), and top bumper lift tools (16) from two lift tools (24).

(22) Install two large pins (26) and lynch pins (25) in two lift tools (24).

(23) Install two small pins (23) and lynch pins (22) in two lift tools (24).

2-47. M35 SERIES TOWING CONNECTION/DISCONNECTION (CONT)

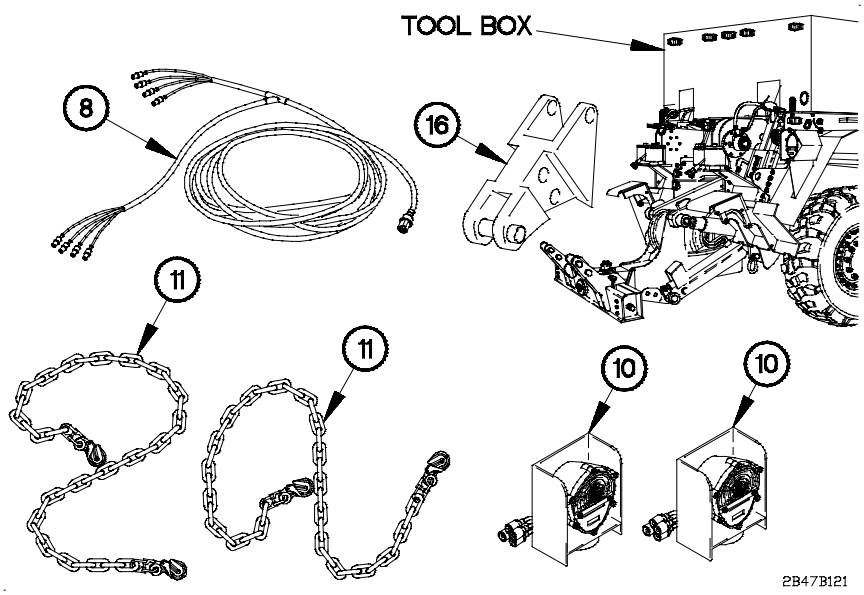

(24) Stow two chains (11), top bumper lift tools (16), emergency tow lights (10), and tow lights cable (8) in tool box.

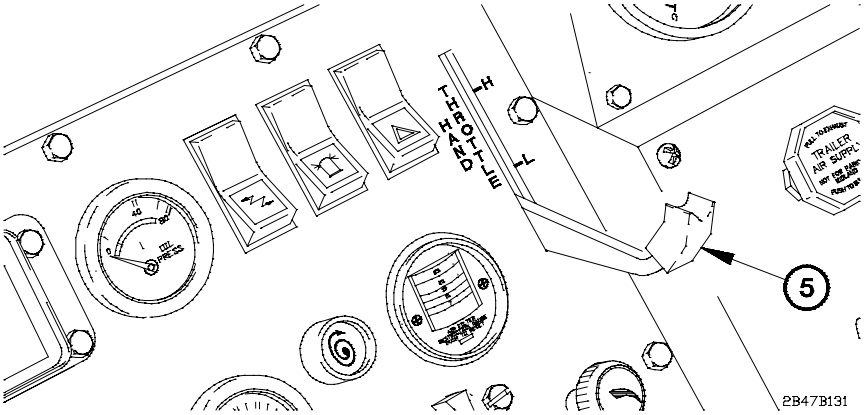

(25) Raise underlift assembly (para 2-44e).

■ (26) Disconnect WRECKER REMOTE CONTROL (para 2-44c).

(27) Set engine speed to idle (750 rpm) by decreasing HAND THROTTLE lever (5) to full down position.

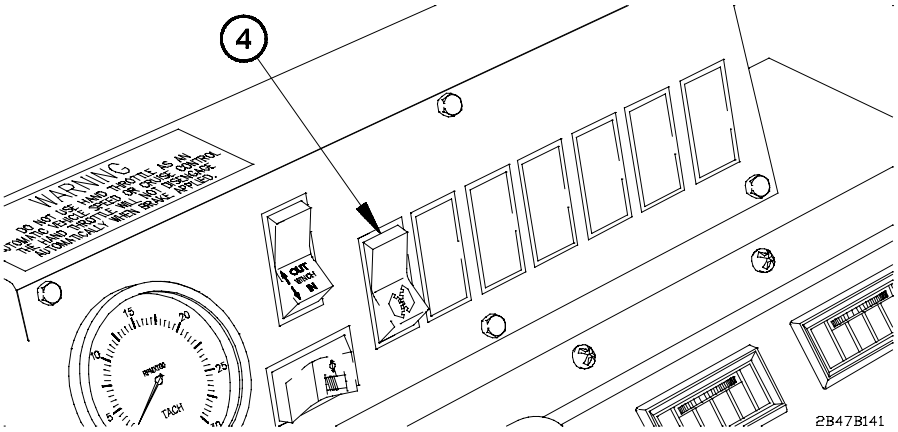

(28) Position PTO switch (4) to off.

(29) Shut down engine (para 2-27f).

(30) Lower and remove two amber warning lights (para 2-74).

c. Rear Connection.

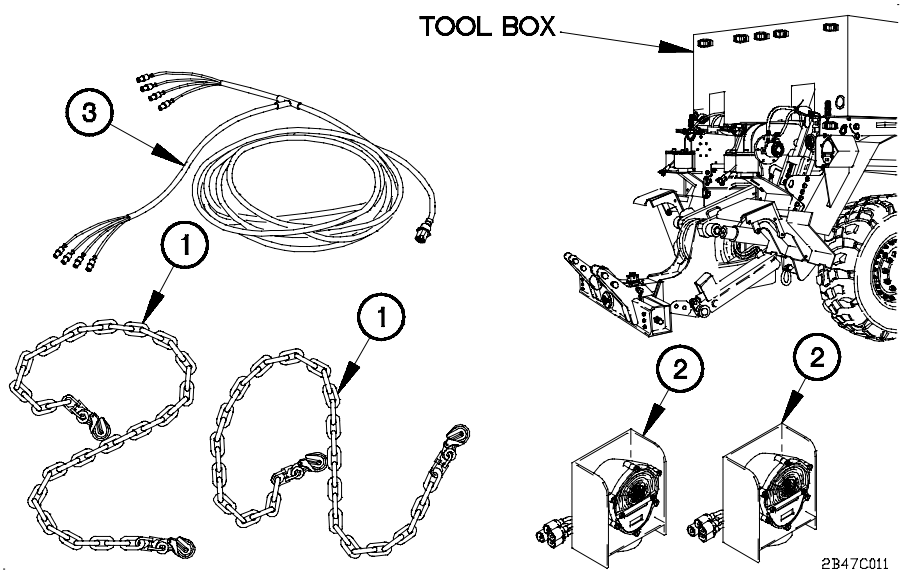

(1) Remove two chains (1), emergency tow lights (2), and tow lights cable (3) from tool box.

2-47. M35 SERIES TOWING CONNECTION/DISCONNECTION (CONT)

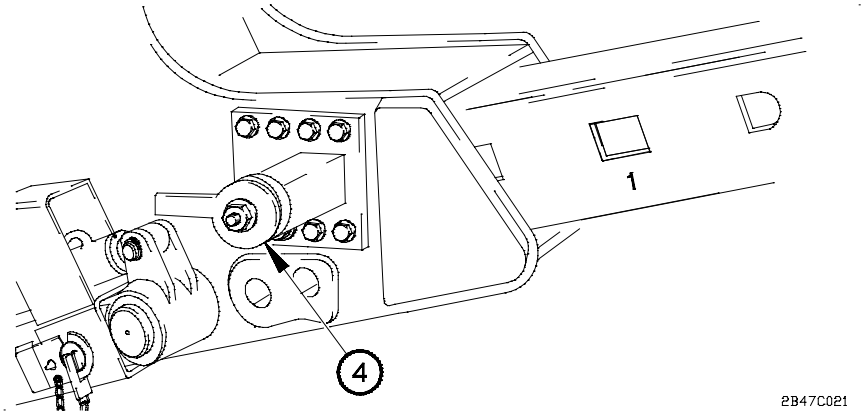

(2) Prepare underlift assembly for operation (para 2-44a).

NOTE

Perform step 3 if assistant is not available to aid in towing connection.

(3) Connect WRECKER REMOTE CONTROL (para 2-44b).

(4) Unlock stinger cam lock (4).

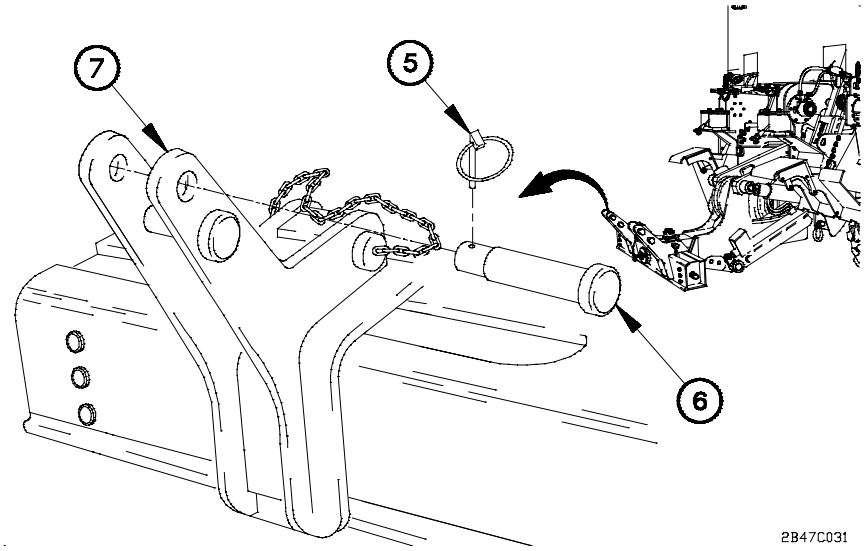

(5) Remove shackles from M35 tow eyes (TM 9-2320-361-10).

(6) Remove two lynch pins (5) and pins (6) from two lift tools (7).

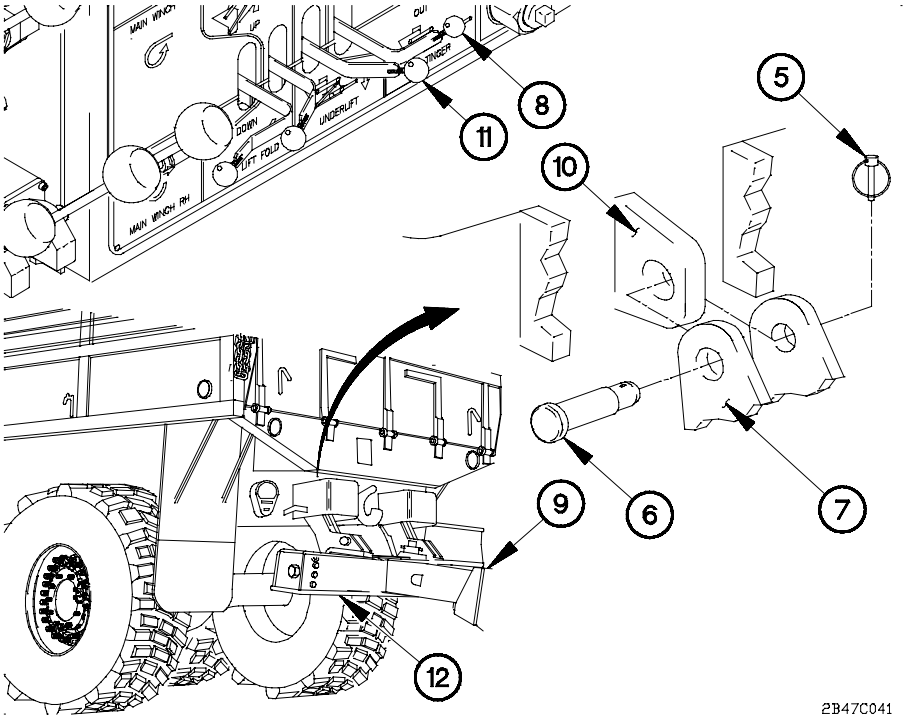

WARNING

Goggles must be worn while operating wrecker control panel. Blowing dust and debris may become airborne while engine is running. Failure to comply may result in injury to personnel.

(7) Place STINGER lever (8) to OUT position to extend stinger (9) until lift tools (7) are aligned with M35 tow eyes (10).

(8) Place UNDERLIFT lever (11) to UP position to raise crossbar (12) until lift tools (7) are aligned with M35 tow eyes (10).

NOTE

Left and right side lift tools are installed on M35 tow eyes the same way. Right side shown.

(9) Install two lift tools (7) on M35 tow eyes (10) with pins (6) and lynch pins (5).

2-47. M35 SERIES TOWING CONNECTION/DISCONNECTION (CONT)

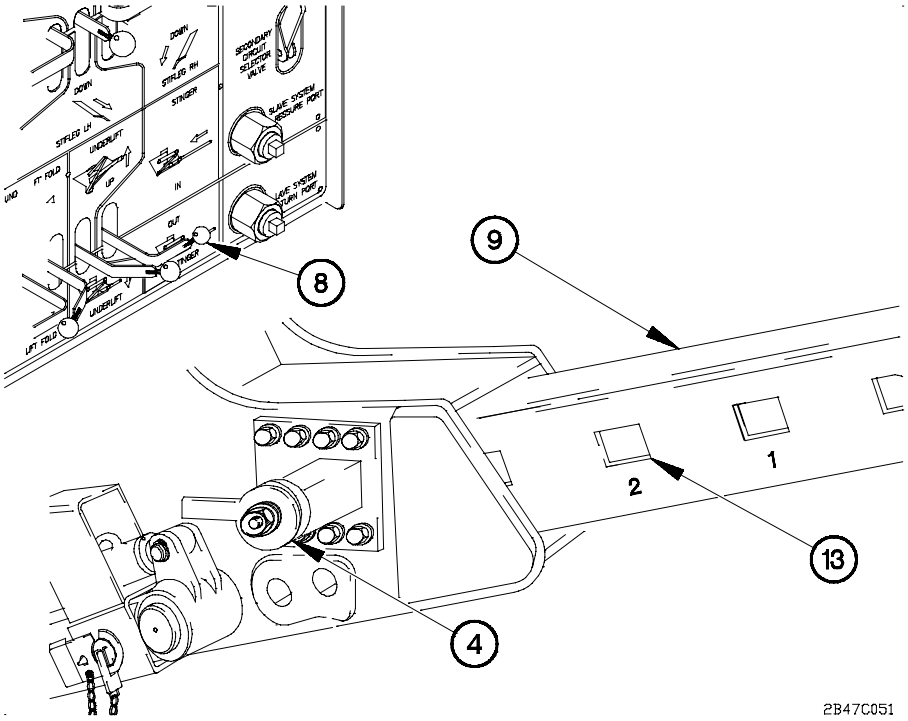

CAUTION

- Stinger cam lock is normally locked in second rectangular hole on stinger when towing M35. It may be necessary to lock stinger cam lock in third rectangular hole on stinger if components are mounted on rear of M35 interfere with movement of crossbar. Lock stinger cam lock in hole which will allow crossbar to rotate freely. Failure to comply may result in damage to equipment.

- It may be necessary to start with holes 4 or 5 on stinger when recovering a vehicle on uneven ground. Once level ground is reached, lock stinger in second hole. Failure to comply may result in damage to equipment.

(10) Place STINGER lever (8) to IN position to retract stinger (9) until desired stinger cam lock hole (13) is aligned.

(11) Lock stinger cam lock (4).

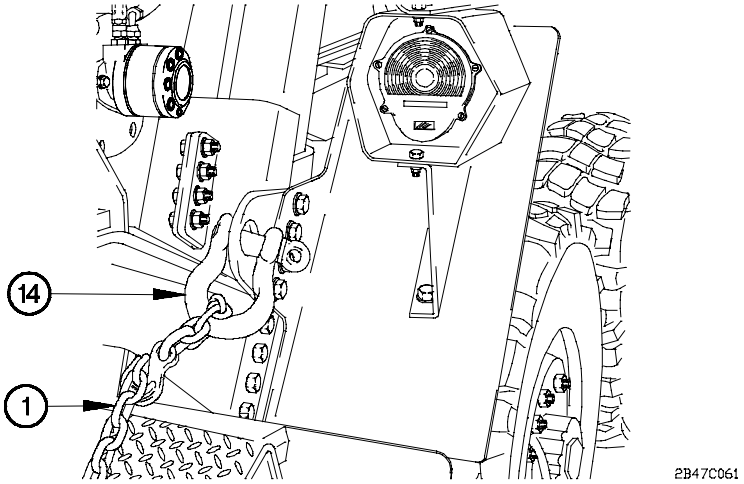

NOTE

Left and right side chains are installed the same way. Right side shown.

(12) Connect one end of two chains (1) to M1089 rear shackles (14).

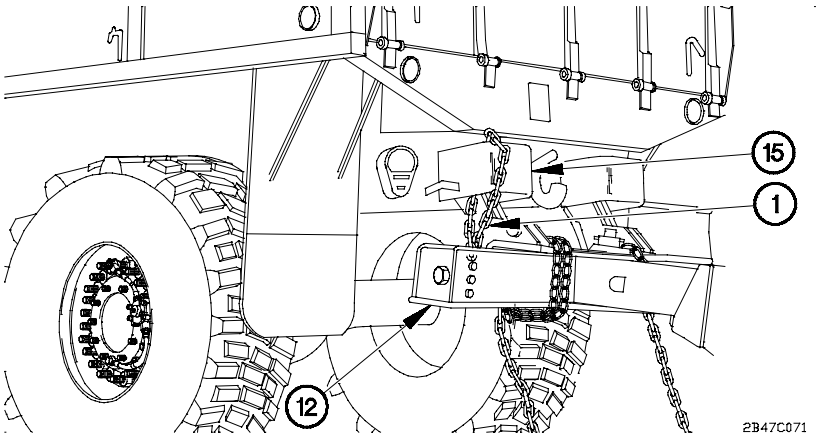

NOTE

Wrap chains around crossbar so that chains are approximately 6-10 in. (15-25 cm) above ground.

(13) Wrap two chains (1) around crossbar (12).

(14) Connect other end of two chains (1) around M35 rear crossmember (15).

2-47. M35 SERIES TOWING CONNECTION/DISCONNECTION (CONT)

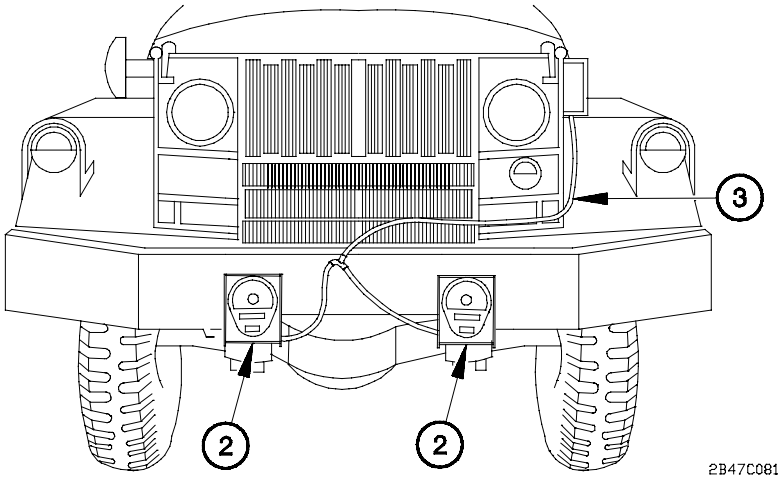

(15) Position two emergency tow lights (2) on front of M35.

(16) Connect tow lights cable (3) to two emergency tow lights (2).

(17) Route tow lights cable (3) along top of M35.

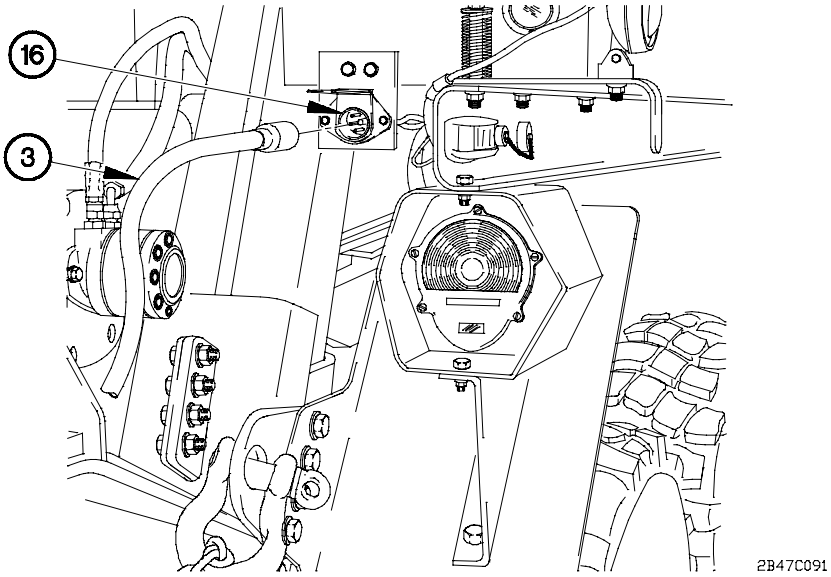

(18) Connect tow lights cable (3) to M1089 rear electrical connector (16).

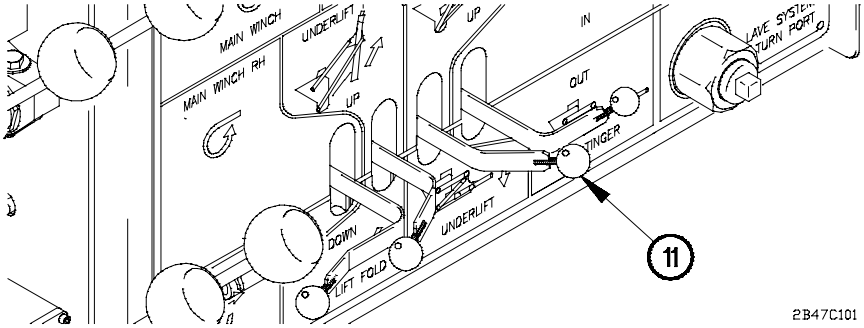

CAUTION

All loose equipment must be secure on M35. Failure to comply may result in damage to equipment.

(19) Prepare M35 for towing (TM 9-2320-361-10).

WARNING

Keep personnel clear of underlift assembly and disabled vehicle when raising. Disabled vehicle could fall suddenly. Failure to comply may result in serious injury or death to personnel.

(20) Place UNDERLIFT lever (11) to UP position to raise M35 until wheels are approximately 16 in. (41 cm) off ground.

(21) Disconnect WRECKER REMOTE CONTROL (para 2-44c). ■

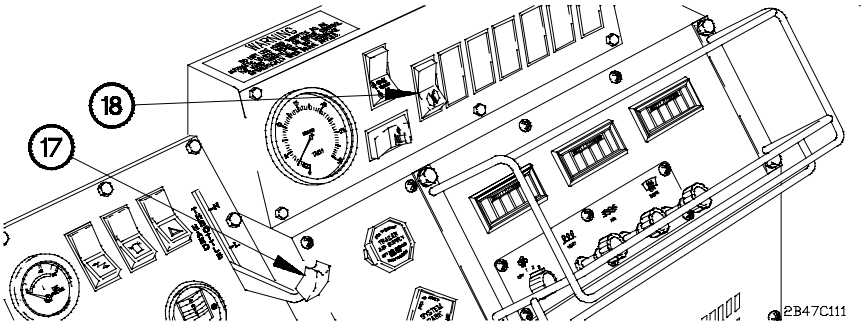

(22) Set engine speed to idle (750 rpm) by decreasing HAND THROTTLE lever (17) to full down position.

(23) Position PTO switch (18) to off.

(24) Install and raise two amber warning lights (para 2-74).

2-47. M35 SERIES TOWING CONNECTION/DISCONNECTION (CONT)

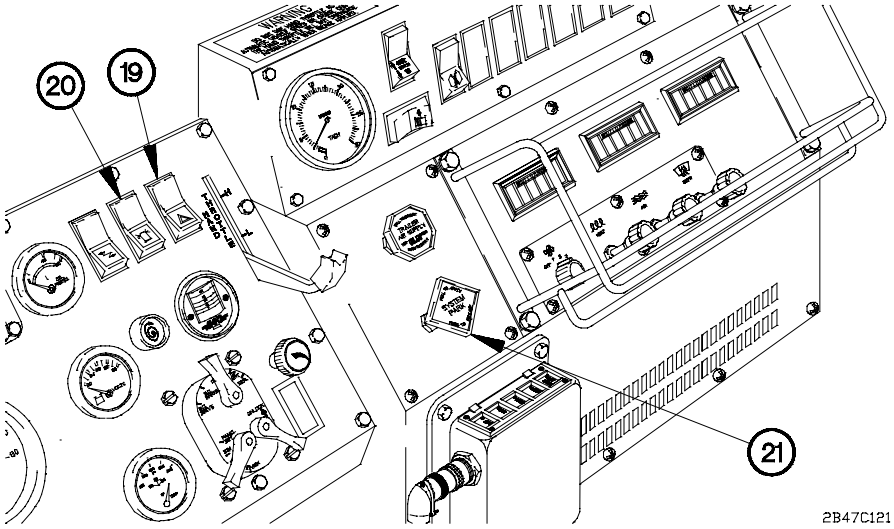

(25) Turn on service drive lights (para 2-27c).

(26) Position hazard lights switch (19) to on.

(27) Position amber warning lights switch (20) to on.

(28) Push in SYSTEM PARK control (21).

(29) Set transmission in gear (para 2-27e).

WARNING

M1089 should not be operated at speeds over 15 mph (24 km/h) when towing, except on paved roads when Operator determines that terrain conditions allow safe operation. The following are maximum speeds for safe operation:

TERRAIN CONDITION	MAXIMUM SPEED
on road (level)	35 mph (56 km/h)
on road (hilly)	30 mph (48 km/h)
off road	15 mph (24 km/h)

Failure to comply may result in serious injury or death to personnel or damage to equipment.

(30) Transport M35.

d. Rear Disconnection.

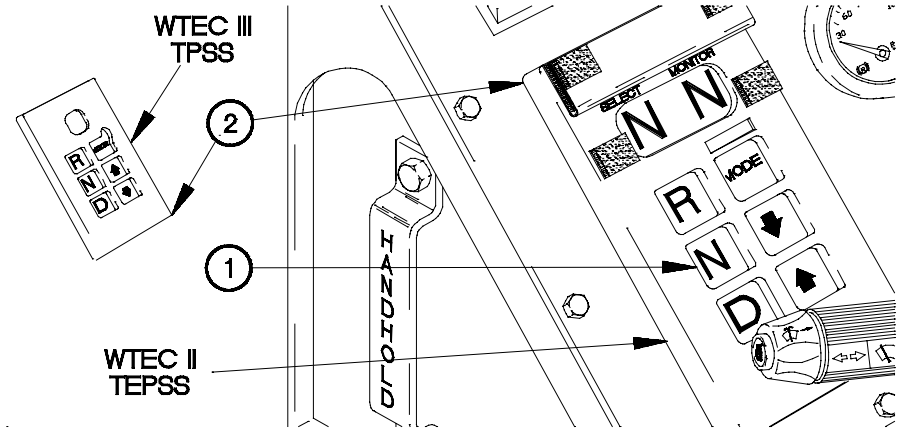

(1) Start engine (para 2-27a or b).

(2) Press N (Neutral) button (1) on WTEC II TEPSS (2) or WTEC III TPSS (2).

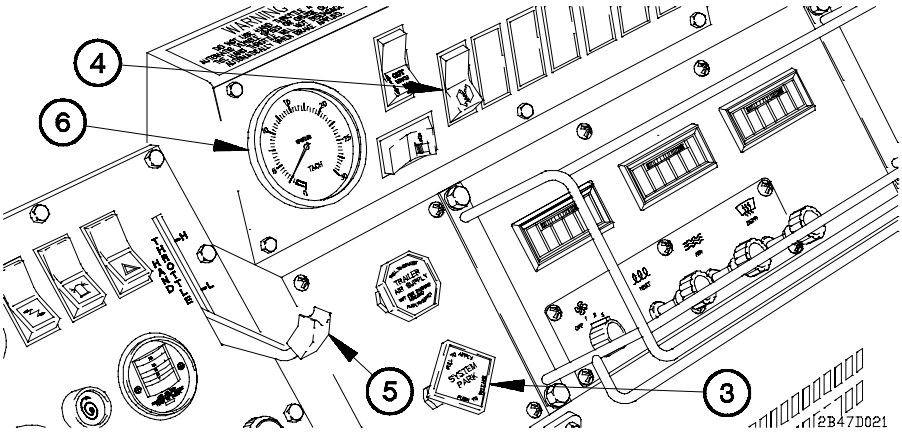

(3) Pull out SYSTEM PARK control (3).

(4) Position PTO switch (4) to ON.

CAUTION

- Keep tachometer within 1,250-1,450 rpm when Power Take-Off (PTO) is engaged. Failure to comply may result in damage to equipment.
- In the event of a tachometer failure a HAND THROTTLE lever positioned to L is approximately 1,250-1,450 rpm.

(5) Set engine speed by increasing HAND THROTTLE lever (5) until tachometer (6) reads 1,250-1,450 rpm.

2-47. M35 SERIES TOWING CONNECTION/DISCONNECTION (CONT)

NOTE

Perform step 6 if assistant is not available to aid in towing connection.

(6) Connect WRECKER REMOTE CONTROL (para 2-44b).

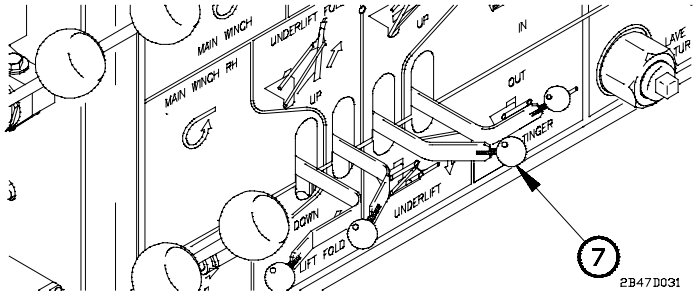

WARNING

- **Keep personnel clear of underlift assembly and disabled vehicle when raising. Disabled vehicle could fall suddenly. Failure to comply may result in serious injury or death to personnel.**
- **Goggles must be worn while operating wrecker control panel. Blowing dust and debris may become airborne while engine is running. Failure to comply may result in injury to personnel.**

(7) Position UNDERLIFT lever (7) to DOWN to lower M35 until wheels are in firm contact with ground.

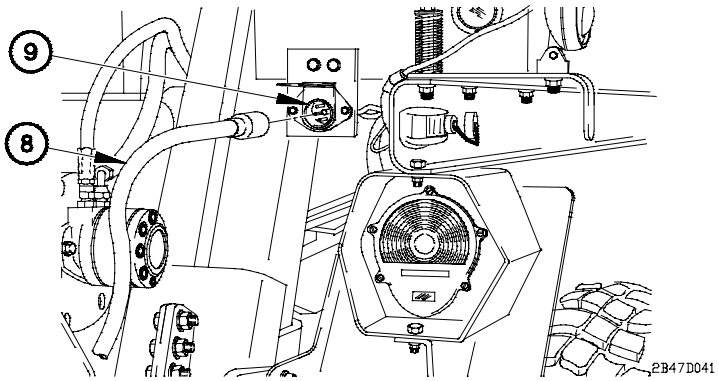

(8) Set parking brake on M35 (TM 9-2320-361-10).

(9) Disconnect tow lights cable (8) from M1089 rear electrical connector (9).

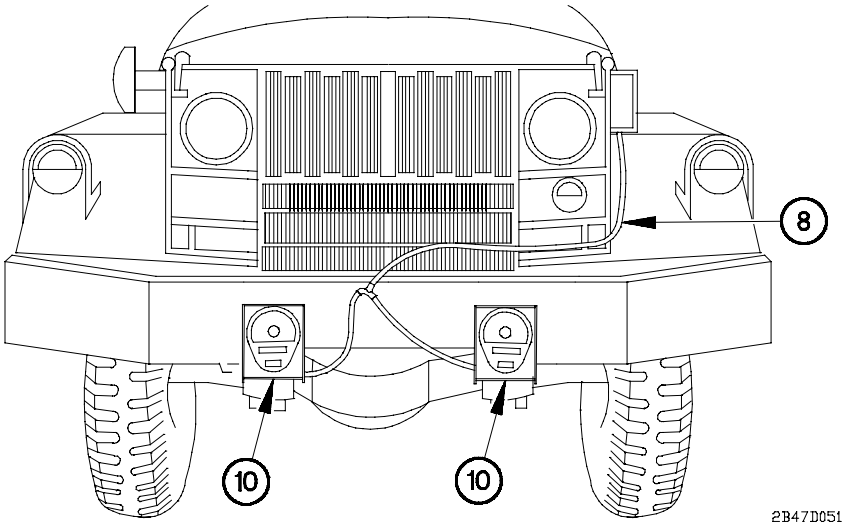

(10) Disconnect tow lights cable (8) from two emergency tow lights (10).

(11) Remove two emergency tow lights (10) from front of M35.

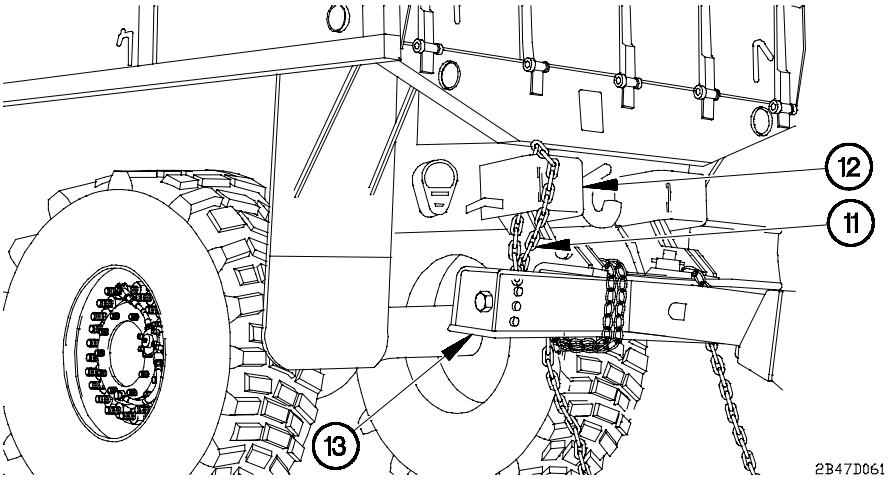

NOTE

Left and right side chains are removed the same way. Left side shown.

(12) Remove two chains (11) from M35 rear crossmember (12).

(13) Remove two chains (11) from crossbar (13).

2-47. M35 SERIES TOWING CONNECTION/DISCONNECTION (CONT)

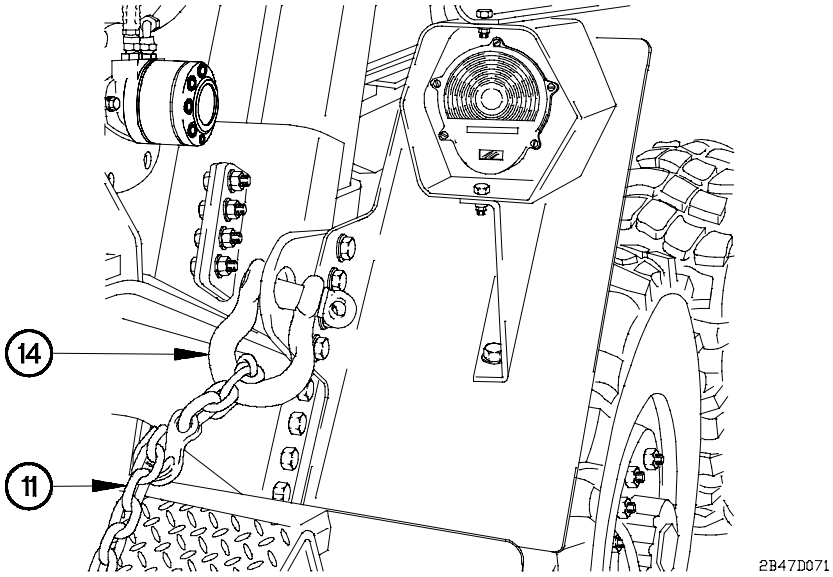

(14) Remove other end of two chains (11) from M1089 rear shackles (14).

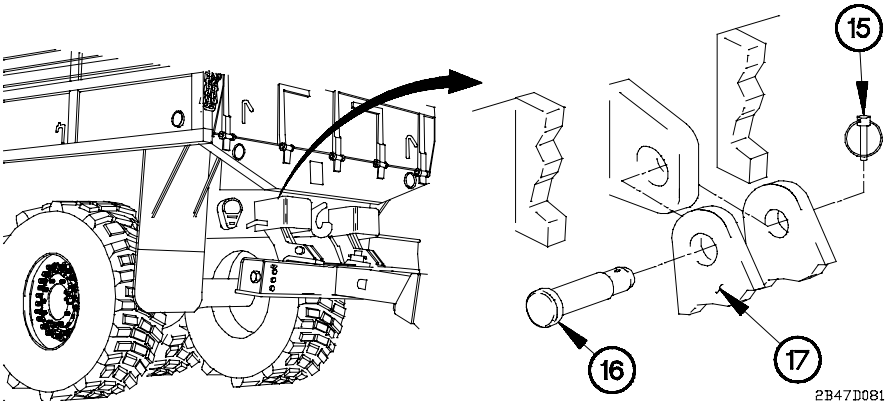

NOTE

Left and right side lift tools are removed the same way. Left side shown.

(15) Remove two lynch pins (15) and pins (16) from two lift tools (17).

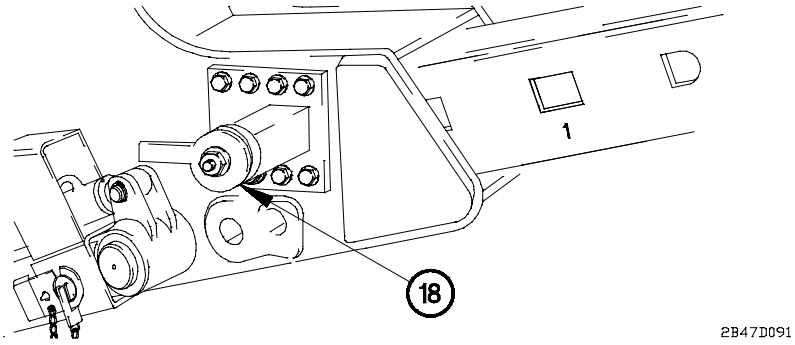

(16) Unlock stinger cam lock (18).

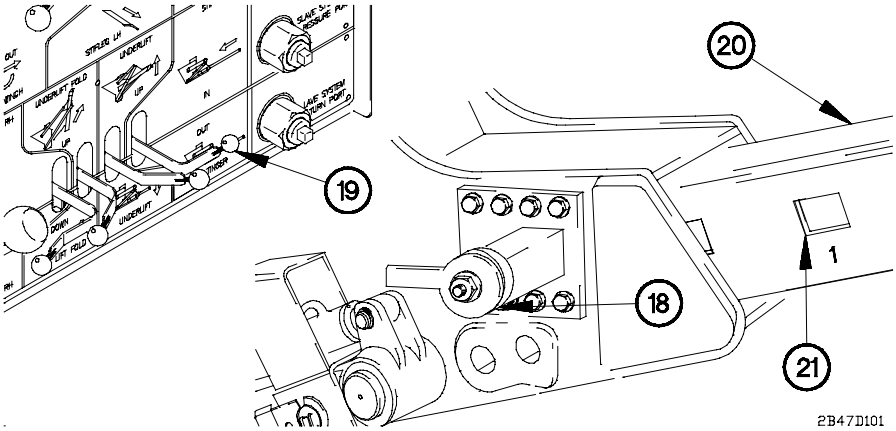

(17) Place STINGER lever (19) to IN position to retract stinger (20) until stinger cam lock (18) is aligned with first hole (21) in stinger.

WARNING

Stinger cam lock must be locked in first rectangular hole on stinger before underlift assembly is folded into its stowed position. Crossbar could shift suddenly. Failure to comply may result in injury to personnel.

(18) Lock stinger cam lock (18).

NOTE

Shackles are attached to M35 tow eyes using bolts, nuts, and cotter pins that were removed with M35 shackles.

(19) Install shackles on M35 tow eyes (TM 9-2320-361-10).

2-47. M35 SERIES TOWING CONNECTION/DISCONNECTION (CONT)

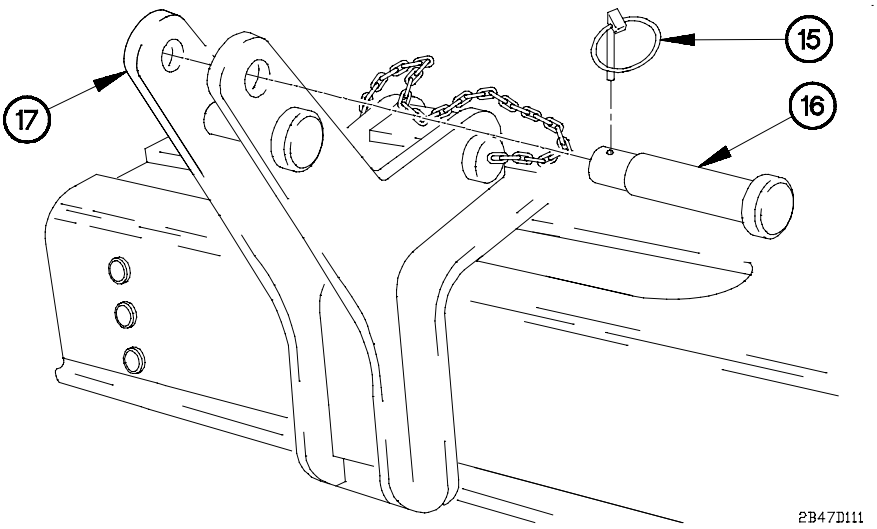

(20) Install two large pins (16) and lynch pins (15) in two lift tools (17).

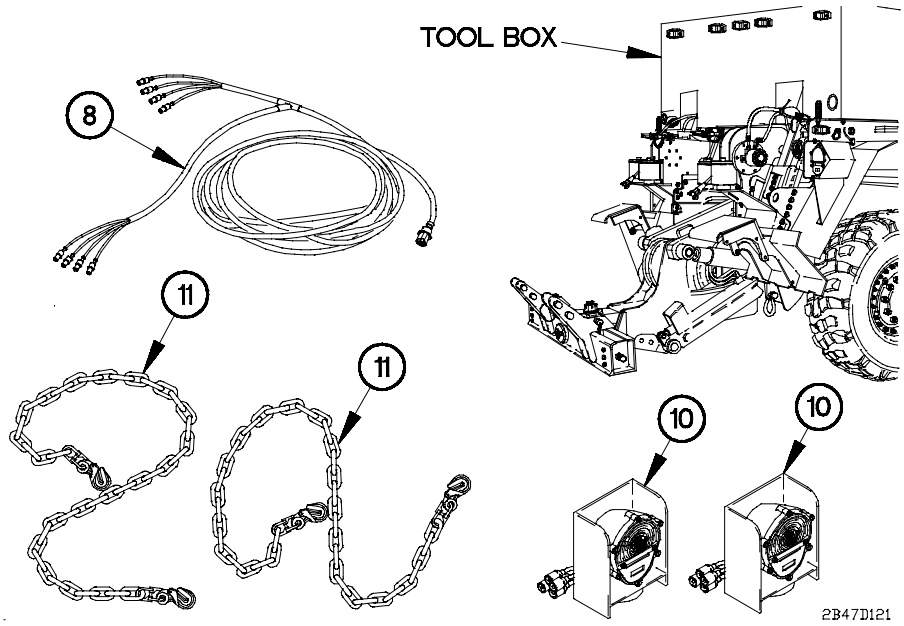

(21) Stow two chains (11), emergency tow lights (10), and tow lights cable (8) in tool box.

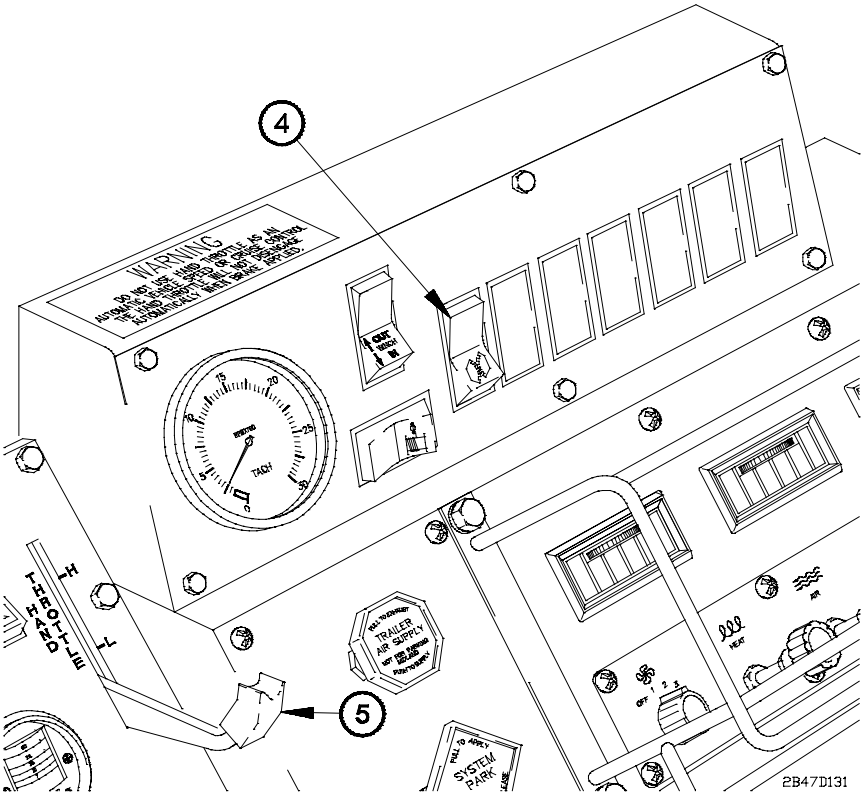

(22) Raise underlift assembly (para 2-44e).

(23) Disconnect WRECKER REMOTE CONTROL (para 2-44c). ■

(24) Set engine speed to idle (750 rpm) by decreasing HAND THROTTLE lever (5) to full down position.

(25) Position PTO switch (4) to off.

(26) Shut down engine (para 2-27f).

(27) Lower and remove two amber warning lights (para 2-74).

2-48. M939/M939A1 AND M809 SERIES TOWING CONNECTION/DISCONNECTION

a. Front Connection.

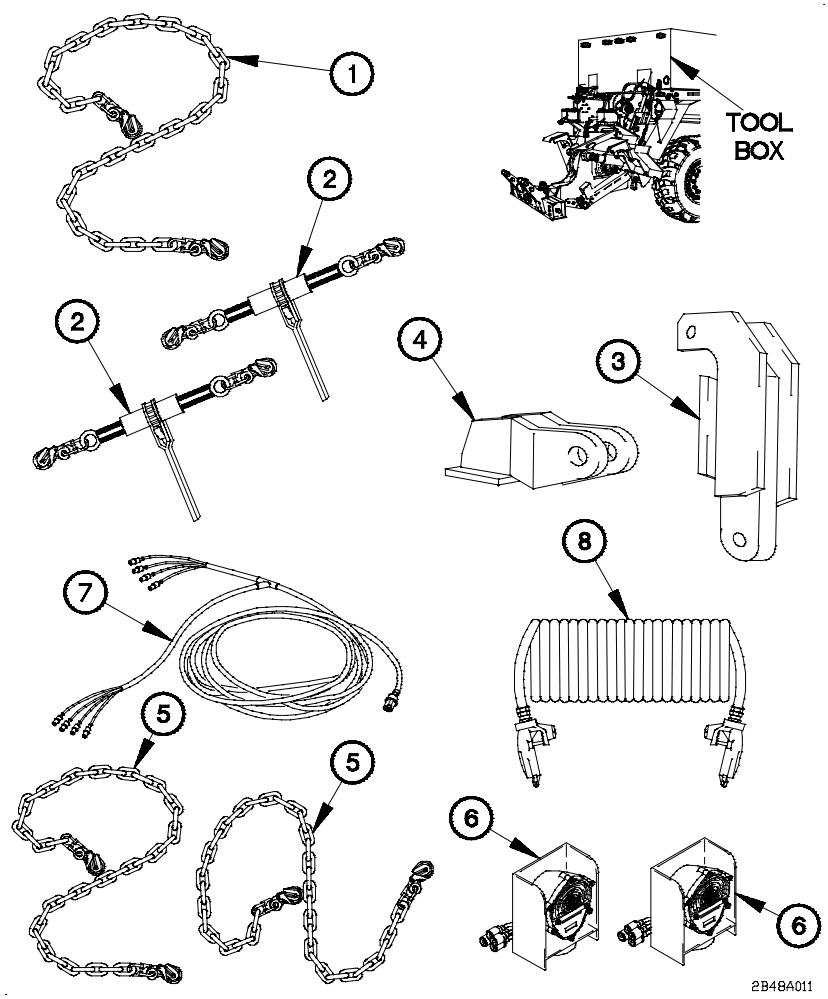

(1) Remove chain (1), two load binders (2), lifting extensions (3), lower brackets (4), chains (5), emergency tow lights (6), tow lights cable (7), and two intervehicular air hoses (8) from tool box.

NOTE

Perform step 3 if assistant is not available to aid in towing connection.

(2) Prepare underlift assembly for operation (para 2-44a).

(3) Connect WRECKER REMOTE CONTROL (para 2-44b).

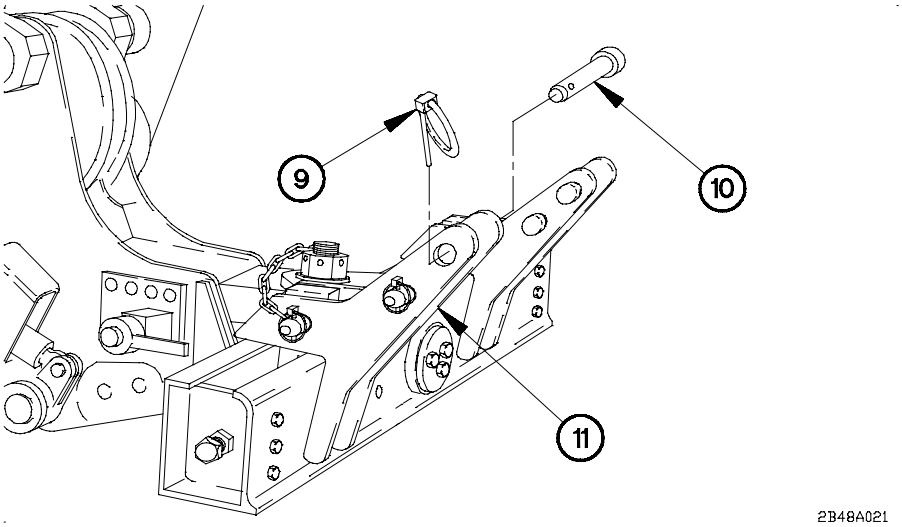

(4) Remove two lynch pins (9) and large pins (10) from two lift tools (11) and stow in tool box.

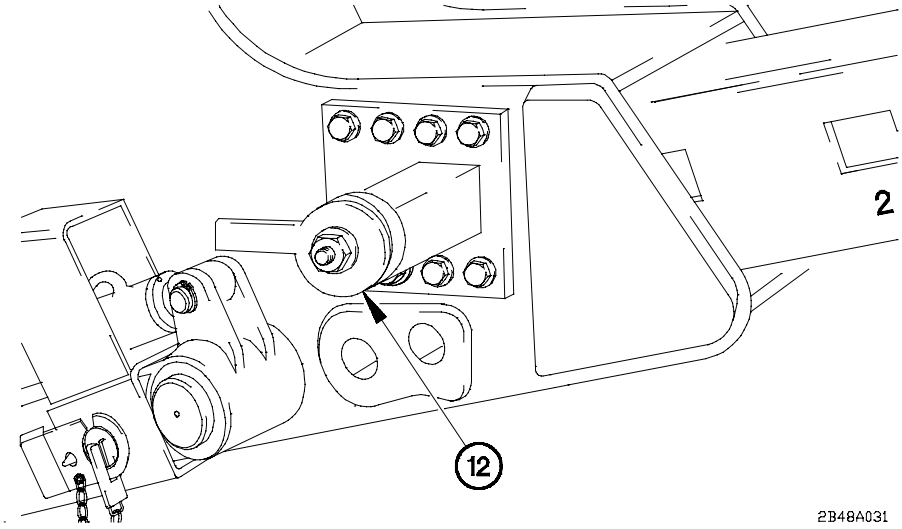

(5) Unlock stinger cam lock (12).

(6) Remove shackles from M939/M939A1/M809 tow eyes (TM 9-2320-272-10/TM 9-2320-260-10).

2-48. M939/M939A1 AND M809 SERIES TOWING CONNECTION/DISCONNECTION (CONT)

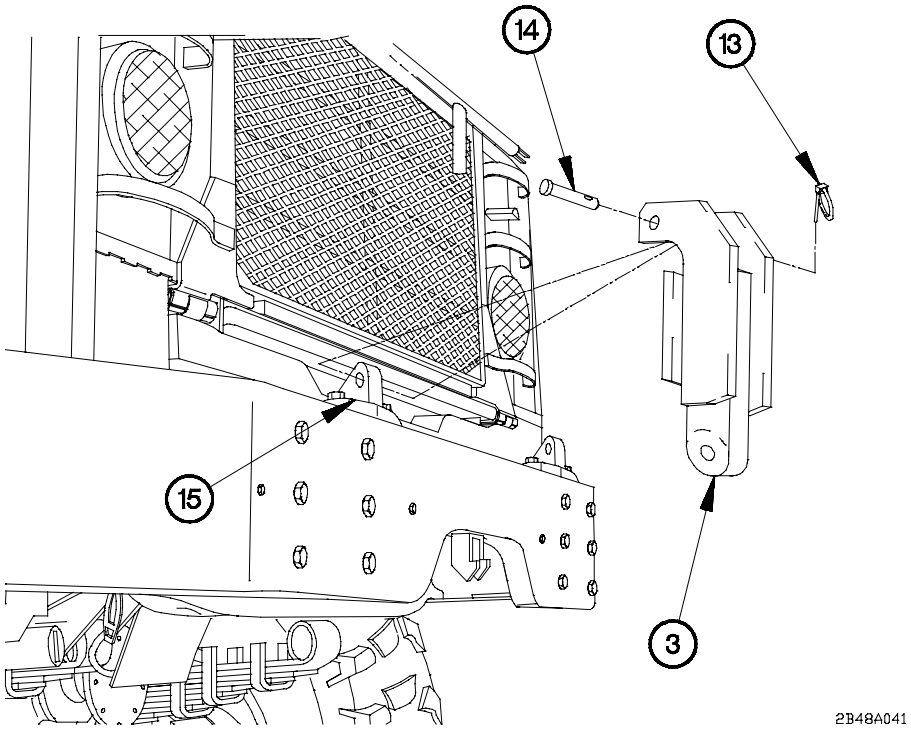

(7) Remove two lynch pins (13) and pins (14) from two lifting extensions (3).

NOTE

Left and right side lifting extensions are installed on M939/M939A1/M809 tow eyes the same way. Right side shown.

(8) Install two lifting extensions (3) on M939/M939A1/M809 tow eyes (15) with pins (14) and lynch pins (13).

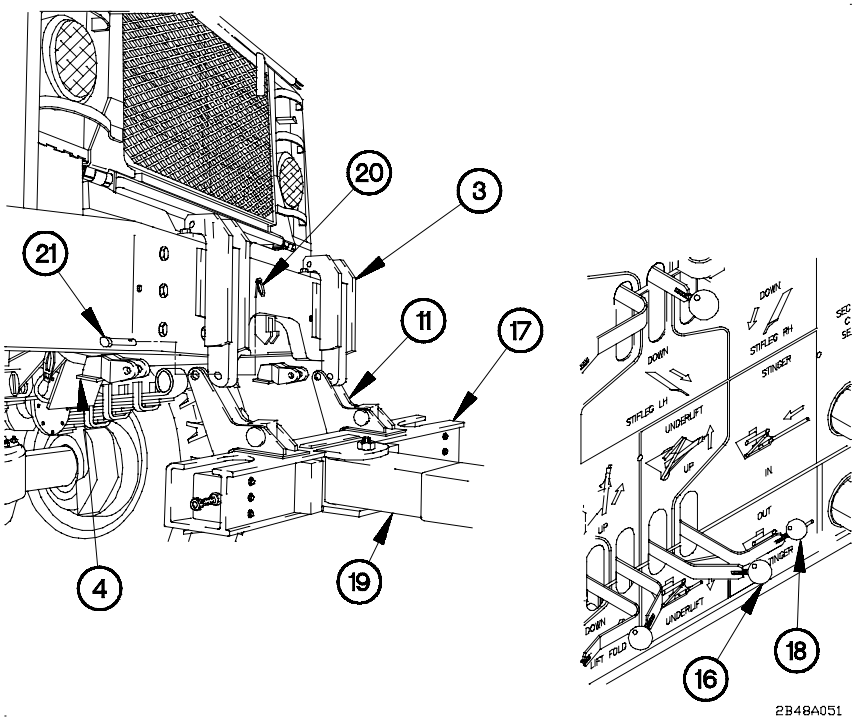

WARNING

Goggles must be worn while operating wrecker control panel. Blowing dust and debris may become airborne while engine is running. Failure to comply may result in injury to personnel.

(9) Place UNDERLIFT lever (16) in UP position to raise crossbar (17) until lift tools (11) are aligned with lifting extensions (3) on M939/M939A1/M809.

(10) Place STINGER lever (18) in OUT position to extend stinger (19) until lift tools (11) are aligned with lifting extensions (3) on M939/M939A1/M809.

(11) Remove two lynch pins (20) and pins (21) from lifting extensions (3).

NOTE

Left and right side lower brackets are installed on lifting extensions and lift tools the same way. Right side shown.

(12) Install two lower brackets (4) on lifting extensions (3) and lift tools (11) with pins (21) and lynch pins (20).

2-48. M939/M939A1 AND M809 SERIES TOWING CONNECTION/DISCONNECTION (CONT)

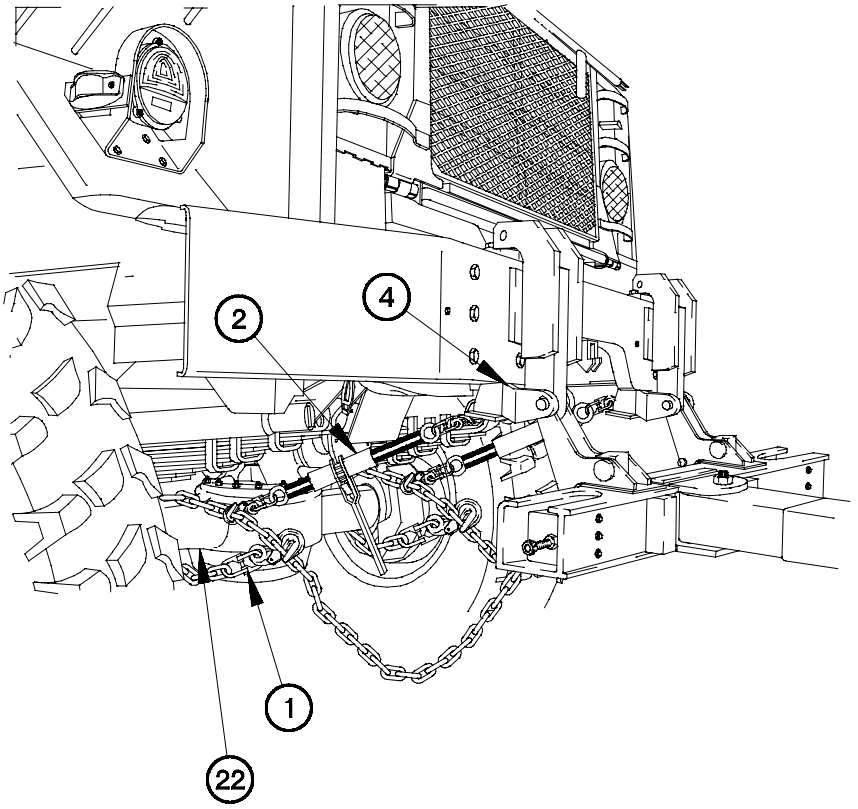

(13) Wrap one end of chain (1) around M939/M939A1/M809 front axle (22) then hook chain back to itself.

(14) Wrap other end of chain (1) around opposite side of M939/M939A1/M809 front axle (22) then hook chain back to itself.

NOTE

Left and right side load binders are installed the same way. Right side shown.

(15) Attach hooks of two load binders (2) to chain (1) that is wrapped around M939/M939A1/ M809 front axle (22).

(16) Attach other end of load binders (2) to two lower brackets (4).

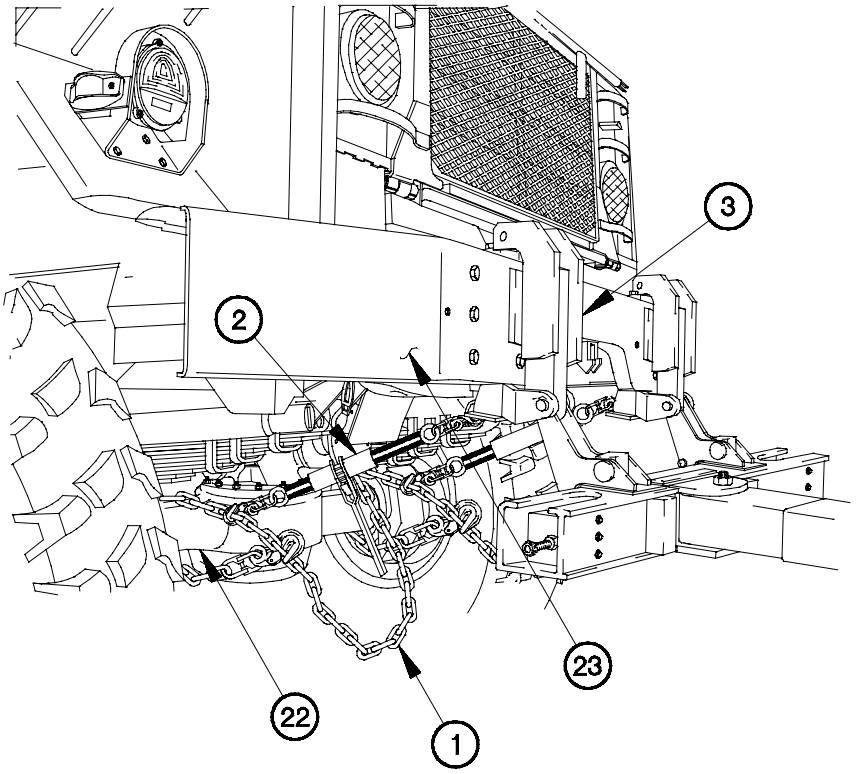

2B48A071

(17) Wrap remaining slack in chain (1) around M939/M939A1/M809 front axle (22) to prevent chain from dragging on ground.

CAUTION

Position lower brackets between front bumper attaching parts. Lifting extensions must be pulled tight against front bumper and all slack in chain removed. Failure to comply may result in damage to equipment.

NOTE

Operating crank handles of load binders will remove slack from chain.

(18) Remove slack in chain (1), using both load binders (2), until lifting extensions (3) are against M939/M939A1/M809 front bumper (23).

2-48. M939/M939A1 AND M809 SERIES TOWING CONNECTION/DISCONNECTION (CONT)

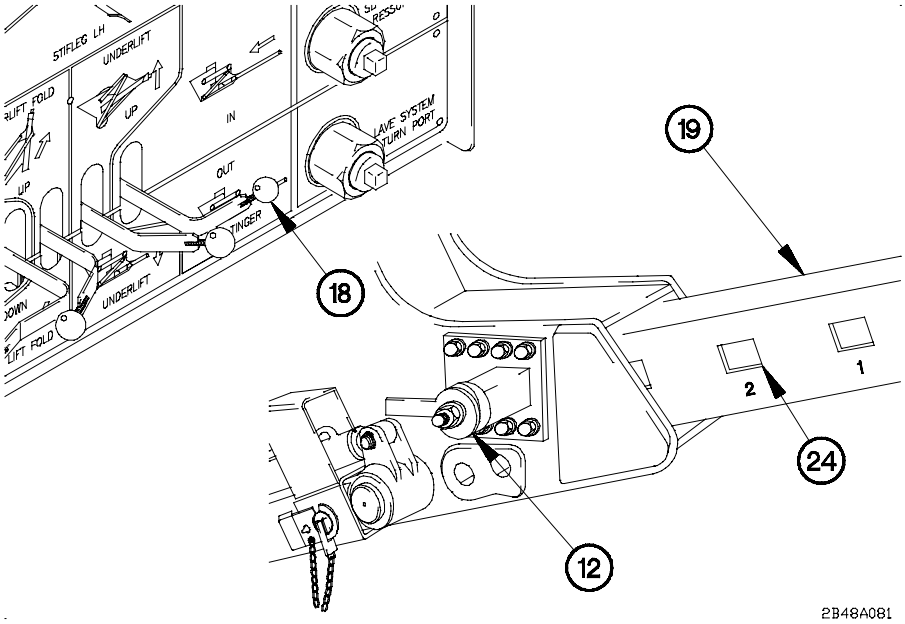

(19) Manually release spring brakes on M939/M939A1/M809 (TM 9-2320-272-10/TM 9-2320-260-10).

CAUTION

- Stinger cam lock is normally locked in second rectangular hole on stinger when towing an M939/M939A1/M809. It may be necessary to lock stinger cam lock in third rectangular hole on stinger if winches or other components mounted on front of M939/M939A1/M809 interfere with movement of crossbar. Lock stinger cam lock in hole which will allow crossbar to rotate freely. Failure to comply may result in damage to equipment.

- It may be necessary to start with holes 4 or 5 on stinger when recovering a vehicle on uneven ground. Once level ground is reached, lock stinger in second hole. Failure to comply may result in damage to equipment.

(20) Place STINGER lever (18) to IN position to retract stinger (19) until desired stinger cam lock hole (24) is aligned.

(21) Lock stinger cam lock (12).

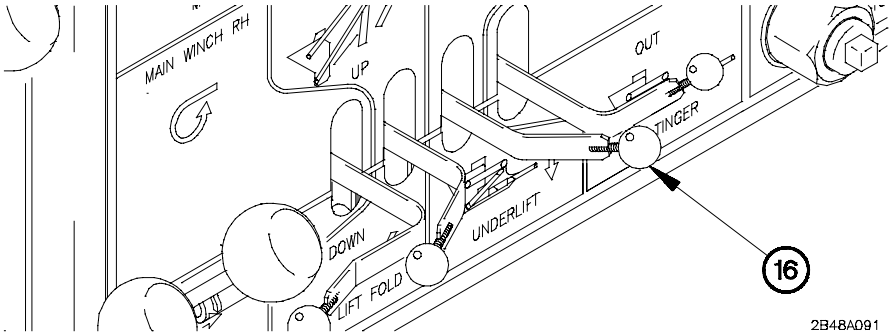

CAUTION

All loose equipment must be secure on M939/M939A1/M809. Failure to comply may result in damage to equipment.

(22) Prepare M939/M939A1/M809 for towing (TM 9-2320-272-10/TM 9-2320-260-10).

WARNING

Keep personnel clear of underlift assembly and disabled vehicle when raising. Disabled vehicle could fall suddenly. Failure to comply may result in serious injury or death to personnel.

(23) Place UNDERLIFT lever (16) in UP position to raise M939/M939A1/M809 until wheels are approximately 16 in. (41 cm) off ground.

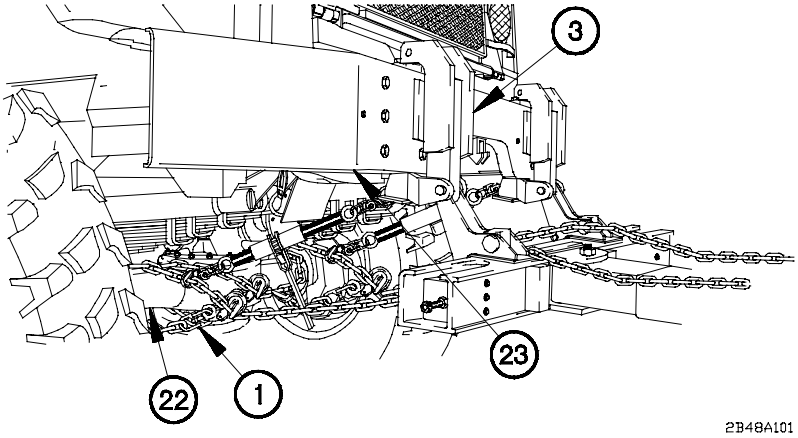

(24) Check that chain (1) around M939/M939A1/M809 front axle (22) is tight.

(25) Check that lifting extensions (3) are tight against M939/M939A1/M809 front bumper (23).

2-48. M939/M939A1 AND M809 SERIES TOWING CONNECTION/DISCONNECTION (CONT)

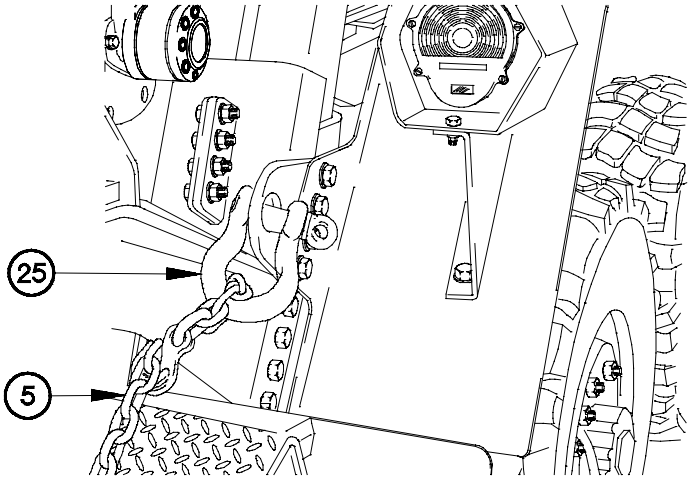

NOTE

Left and right side chains are installed the same way. Right side shown.

(26) Connect one end of two chains (5) to M1089 rear shackles (25).

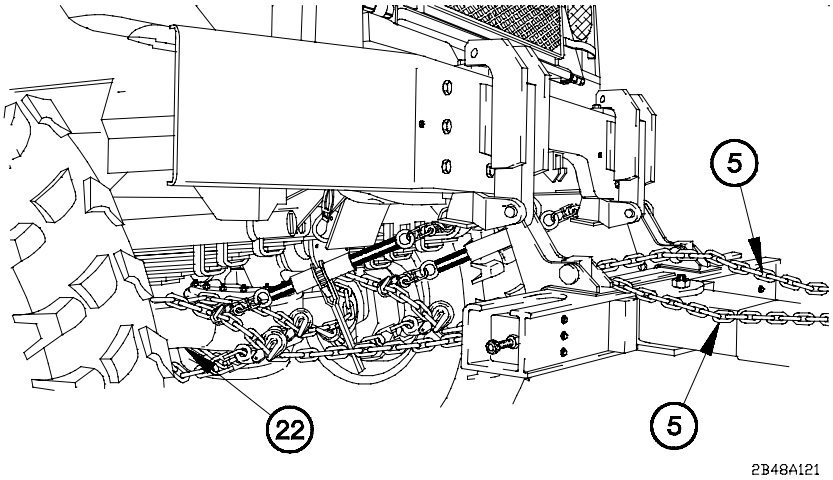

(27) Connect other end of two chains (5) to M939/M939A1/M809 front axle (22).

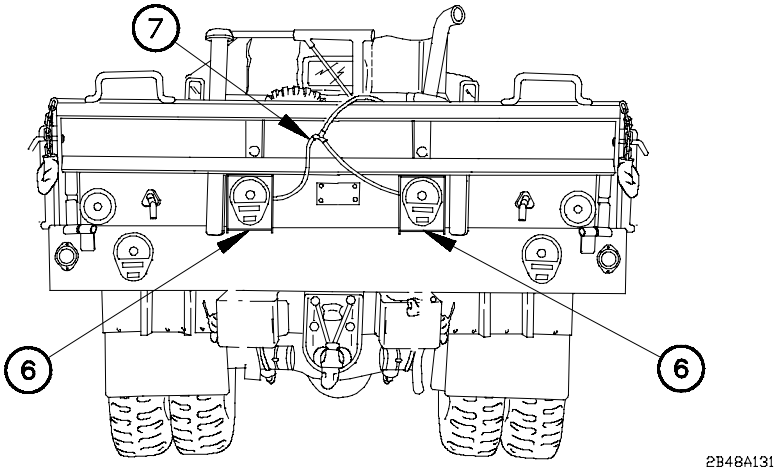

(28) Position two emergency tow lights (6) on rear of M939/M939A1/M809.

(29) Connect tow lights cable (7) to two emergency tow lights (6).

(30) Route tow lights cable (7) along top of M939/M939A1/M809.

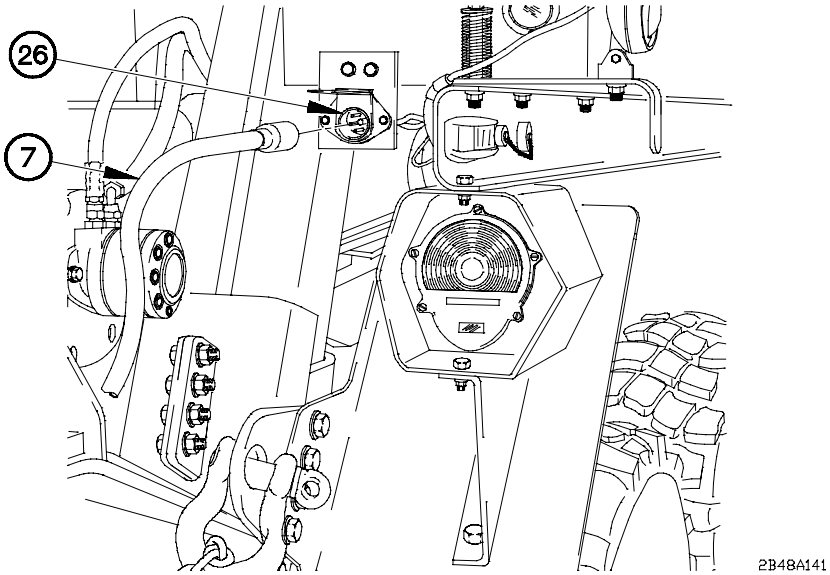

(31) Connect tow lights cable (7) to M1089 rear electrical connector (26).

2-48. M939/M939A1 AND M809 SERIES TOWING CONNECTION/DISCONNECTION (CONT)

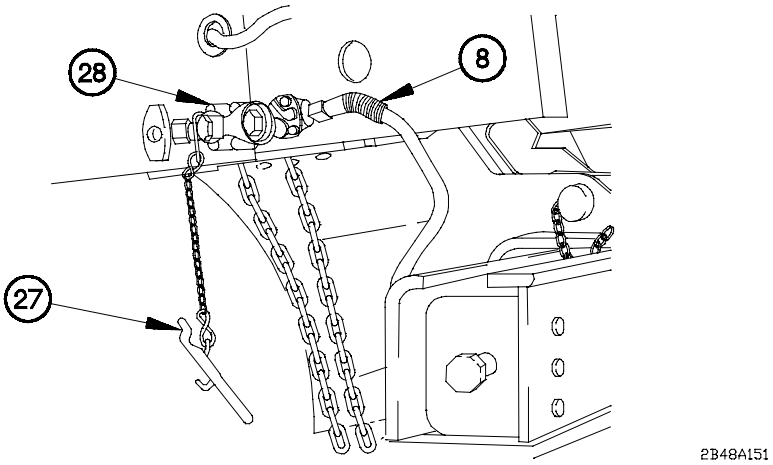

(32) Remove two dummy connectors (27) from M939/M939A1/M809 gladhands (28).

NOTE

Service and emergency intervehicular air hoses are connected the same way. Service intervehicular air hose shown.

(33) Connect two intervehicular air hoses (8) to M939/M939A1/M809 gladhands (28).

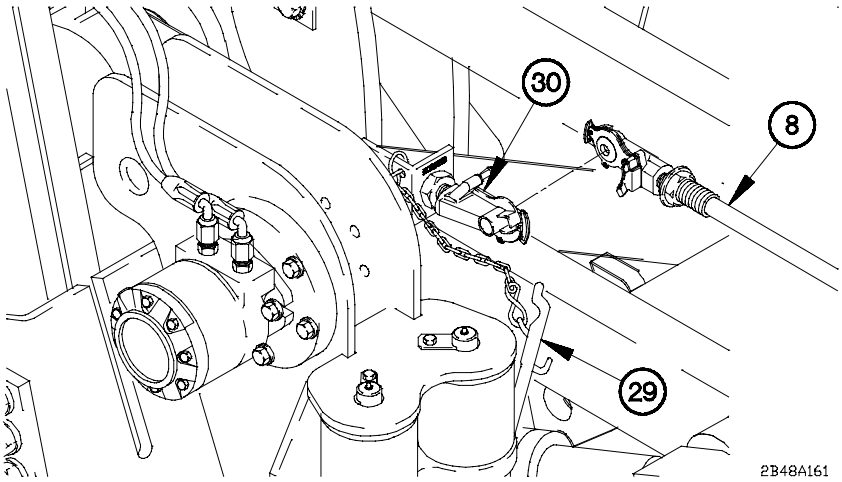

(34) Remove two dummy connectors (29) from M1089 gladhands (30).

(35) Connect two intervehicular air hoses (8) to M1089 gladhands (30).

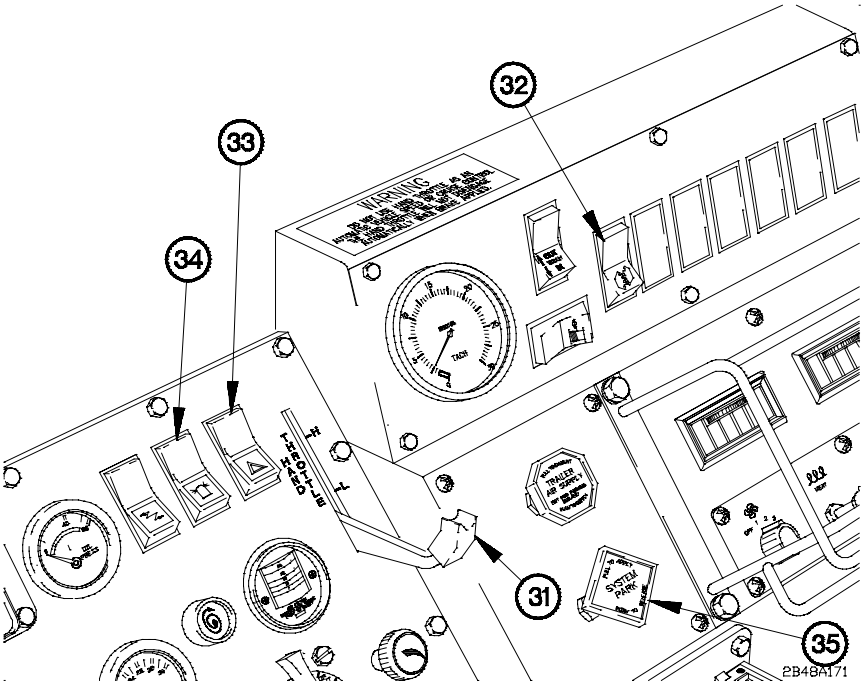

(36) Disconnect WRECKER REMOTE CONTROL (para 2-44c). ■

(37) Set engine speed to idle (750 rpm) by decreasing HAND THROTTLE lever (31) to full down position.

(38) Position PTO switch (32) to off.

(39) Install and raise two amber warning lights (para 2-74).

(40) Turn on service drive lights (para 2-27c).

(41) Position hazard lights switch (33) to on.

(42) Position amber warning lights switch (34) to on.

(43) Push in SYSTEM PARK control (35).

(44) Set transmission in gear (para 2-27e).

2-48. M939/M939A1 AND M809 SERIES TOWING CONNECTION/DISCONNECTION (CONT)

WARNING

M1089 should not be operated at speeds over 15 mph (24 km/h) when towing, except on paved roads when Operator determines that terrain conditions allow safe operation. The following are maximum speeds for safe operation:

TERRAIN CONDITION	MAXIMUM SPEED
on road (level)	35 mph (56 km/h)
on road (hilly)	30 mph (48 km/h)
off road	15 mph (24 km/h)

Failure to comply may result in serious injury or death to personnel or damage to equipment.

CAUTION

Chains must be tight at all times during lift and tow operations. Lifting extensions must be tight against front bumper. The following are maximum distances before inspection is due:

TERRAIN CONDITION	MAXIMUM DISTANCE
on road (level)	105 miles (168 km)
on road (hilly)	90 miles (144 km)
off road	45 miles (72 km)

Failure to comply may result in damage to equipment.

(45) Transport M939/M939A1/M809.

b. Front Disconnection.

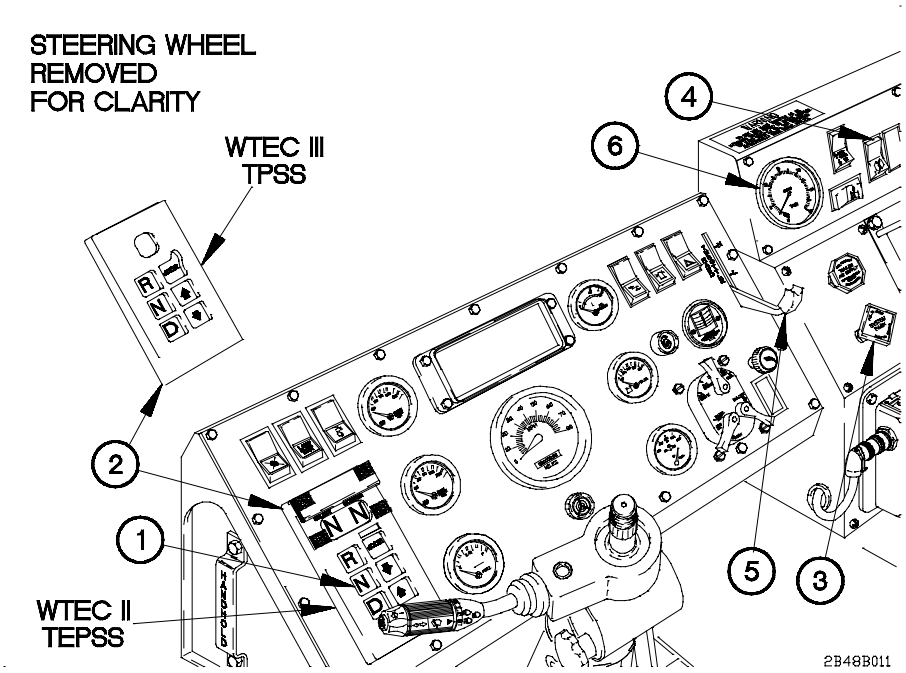

(1) Start engine (para 2-27a or b).

(2) Press N (Neutral) button (1) on WTEC II TEPSS (2) or WTEC III TPSS (2).

(3) Pull out SYSTEM PARK control (3).

(4) Position PTO switch (4) to on.

CAUTION

- Keep tachometer within 1,250-1,450 rpm when Power Take-Off (PTO) is engaged. Failure to comply may result in damage to equipment.
- In the event of a tachometer failure a HAND THROTTLE lever positioned to L is approximately 1,250-1,450 rpm.

(5) Set engine speed by increasing HAND THROTTLE lever (5) until tachometer (6) reads 1,250-1,450 rpm.

2-48. M939/M939A1 AND M809 SERIES TOWING CONNECTION/DISCONNECTION (CONT)

NOTE

Perform step 6 if assistant is not available to aid in towing connection.

(6) Connect WRECKER REMOTE CONTROL (para 2-44b).

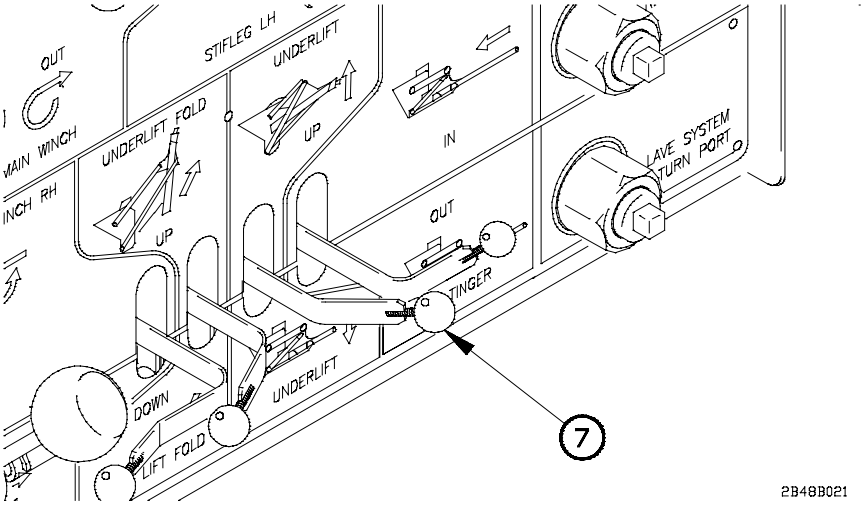

WARNING

- **Keep personnel clear of underlift assembly and disabled vehicle when lowering. Disabled vehicle could fall suddenly. Failure to comply may result in serious injury or death to personnel.**
- **Goggles must be worn while operating wrecker control panel. Blowing dust and debris may become airborne while engine is running. Failure to comply may result in injury to personnel.**

(7) Place UNDERLIFT lever (7) in DOWN position to lower M939/M939A1/M809 until wheels are in firm contact with ground.

(8) Set parking brake on M939/M939A1/M809 (TM 9-2320-272-10/TM 9-2320-260-10).

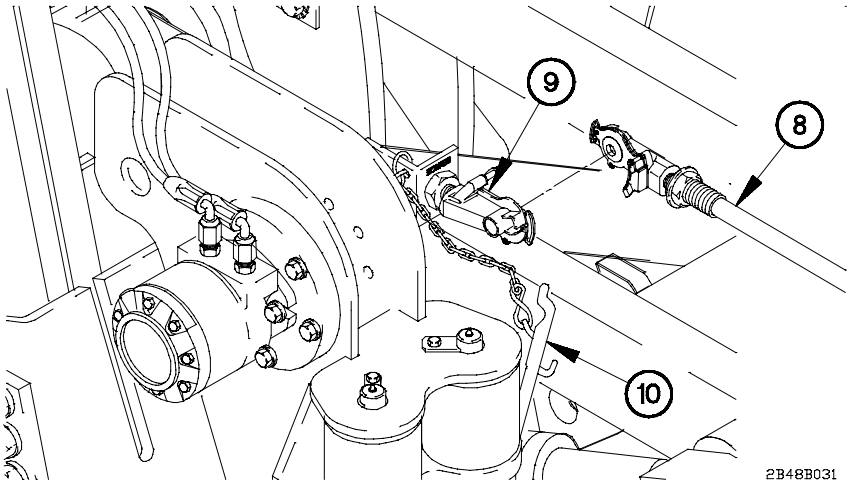

NOTE

Service and emergency intervehicular air hoses are disconnected the same way. Service intervehicular air hose shown.

(9) Disconnect two intervehicular air hoses (8) from M1089 gladhands (9).

(10) Install two dummy connectors (10) on M1089 gladhands (9).

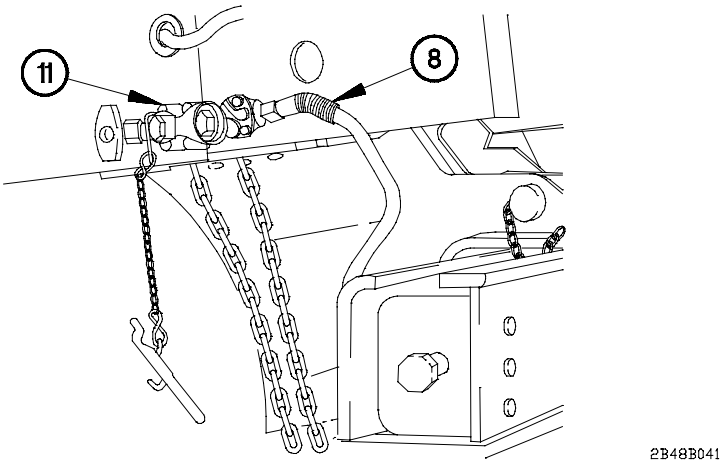

(11) Disconnect two intervehicular air hoses (8) from M939/M939A1/M809 gladhands (11).

2-48. M939/M939A1 AND M809 SERIES TOWING CONNECTION/DISCONNECTION (CONT)

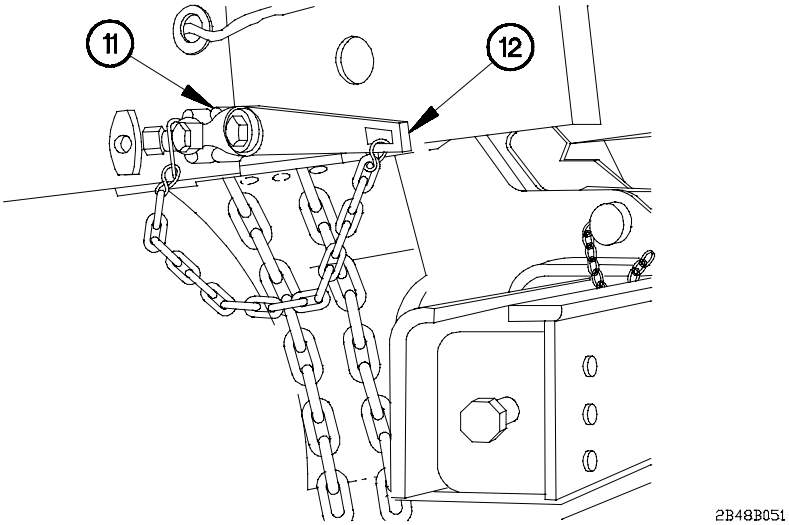

(12) Install two dummy connectors (12) on M939/M939A1/M809 gladhands (11).

(13) Tighten caging bolt to cage spring brakes on M939/M939A1/M809 (TM 9-2320-272-10/TM 9-2320-260-10).

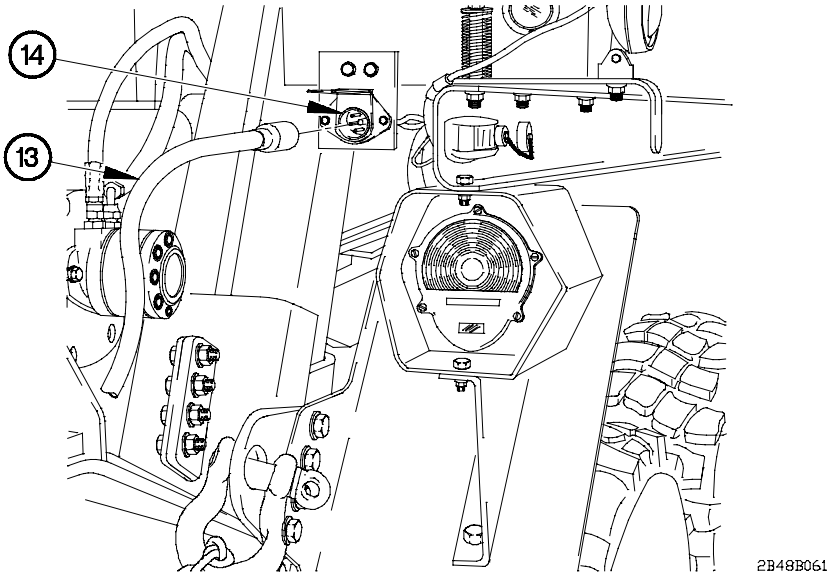

(14) Disconnect tow lights cable (13) from M1089 rear electrical connector (14).

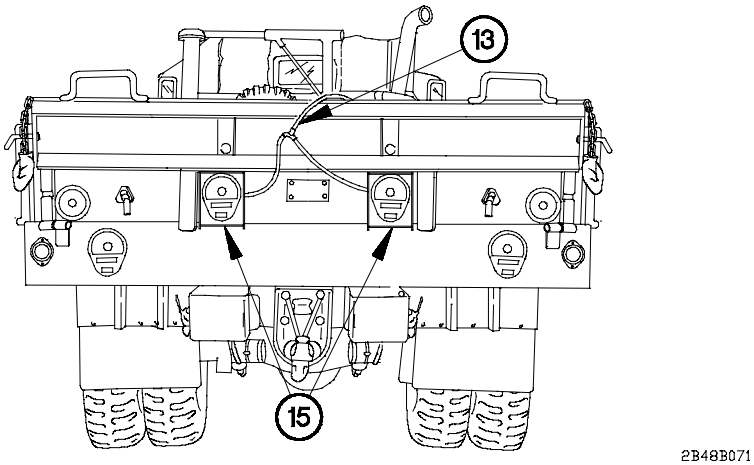

(15) Disconnect tow lights cable (13) from two emergency tow lights (15).

(16) Remove two emergency tow lights (15) from rear of M939/M939A1/M809.

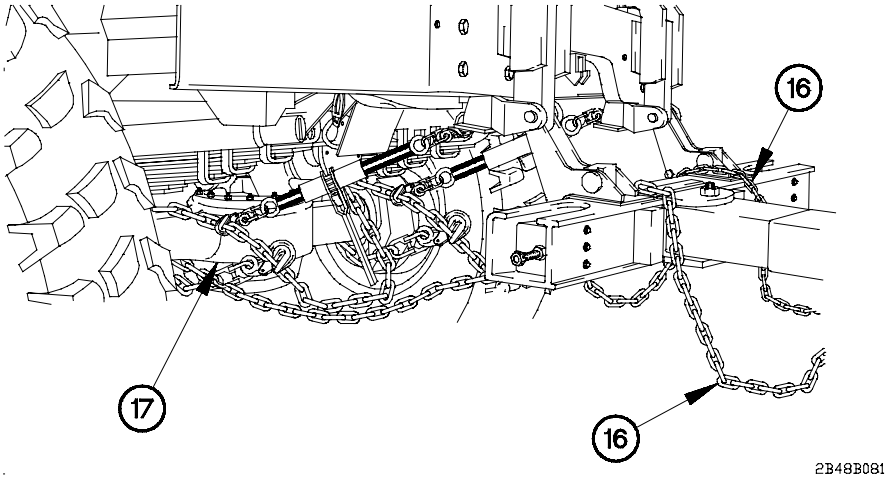

NOTE

Left and right side chains are removed the same way. Right side shown.

(17) Remove two chains (16) from M939/M939A1/M809 front axle (17).

2-48. M939/M939A1 AND M809 SERIES TOWING CONNECTION/DISCONNECTION (CONT)

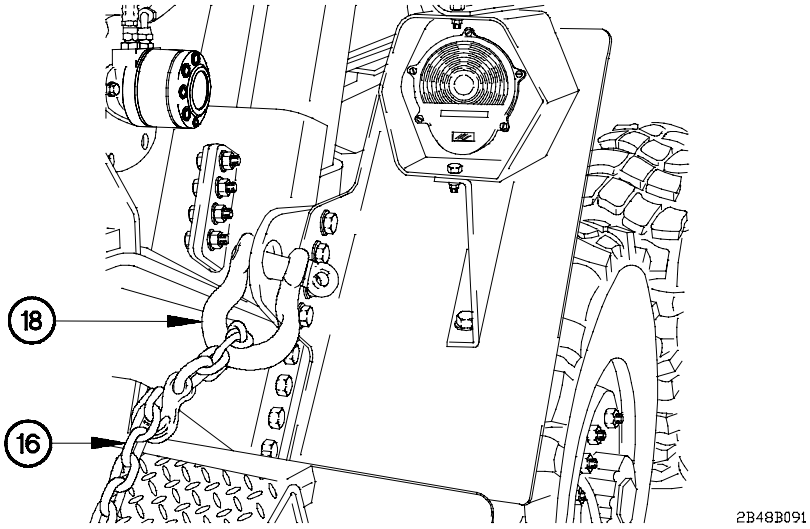

(18) Remove other end of two chains (16) from M1089 rear shackles (18).

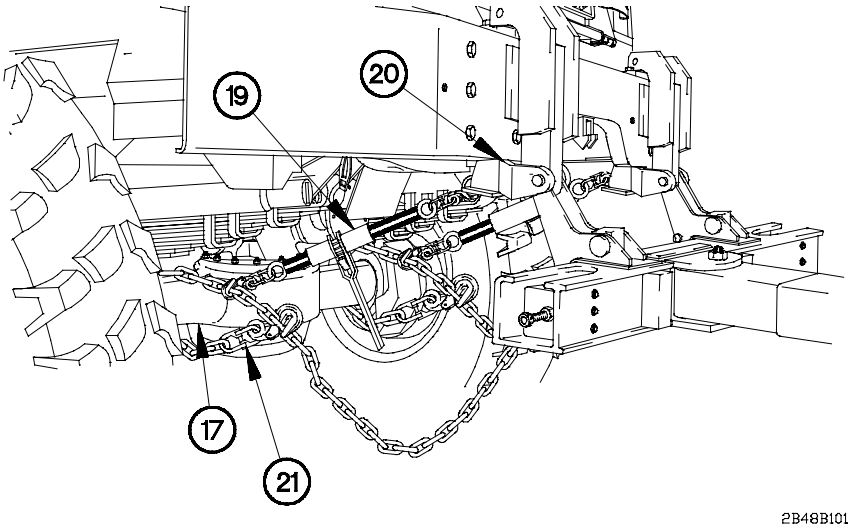

NOTE

Operating crank handles of load binders will remove tension from chain.

(19) Remove two load binders (19) from two lower brackets (20) and chain (21).

(20) Remove chain (21) from M939/M939A1/M809 front axle (17).

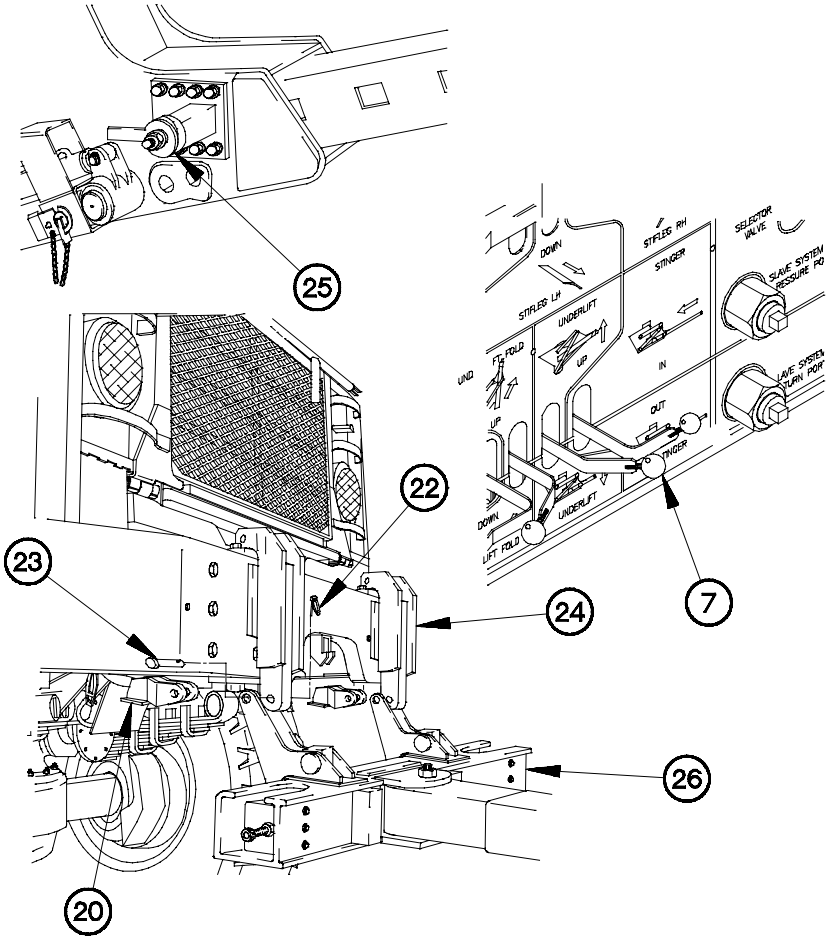

NOTE

Left and right side lower brackets are removed from lifting extensions the same way. Right side shown.

(21) Remove two lynch pins (22), pins (23) and two lower brackets (20) from two lifting extensions (24).

(22) Unlock stinger cam lock (25).

(23) Place UNDERLIFT lever (7) in the DOWN position until crossbar (26) is fully lowered.

2-48. M939/M939A1 AND M809 SERIES TOWING CONNECTION/DISCONNECTION (CONT)

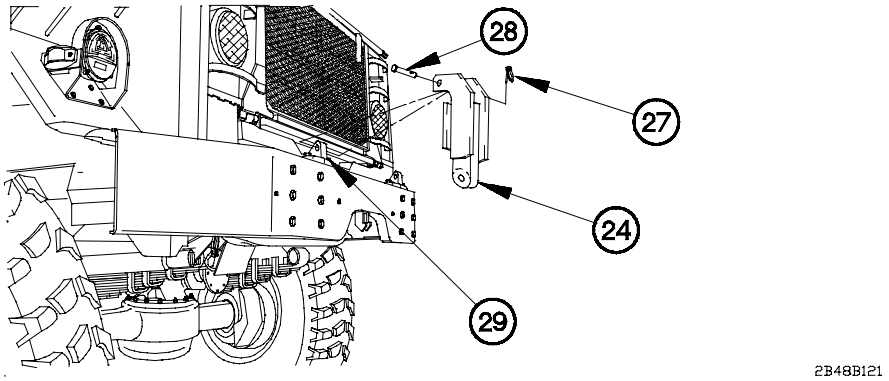

NOTE

Left and right side lifting extensions are removed the same way. Right side shown.

(24) Remove two lynch pins (27), pins (28), and lifting extensions (24) from M939/M939A1/M809 tow eyes (29).

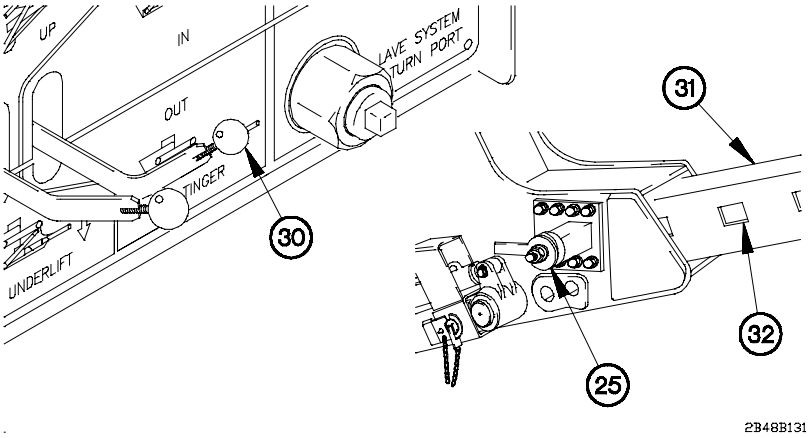

(25) Place STINGER lever (30) to IN position to retract stinger (31) until stinger cam lock (25) is aligned with first hole (32) in stinger.

WARNING

Stinger cam lock must be locked in first rectangular hole on stinger before underlift assembly is folded into its stowed position. Crossbar could shift suddenly. Failure to comply may result in injury to personnel.

(26) Lock stinger cam lock (25).

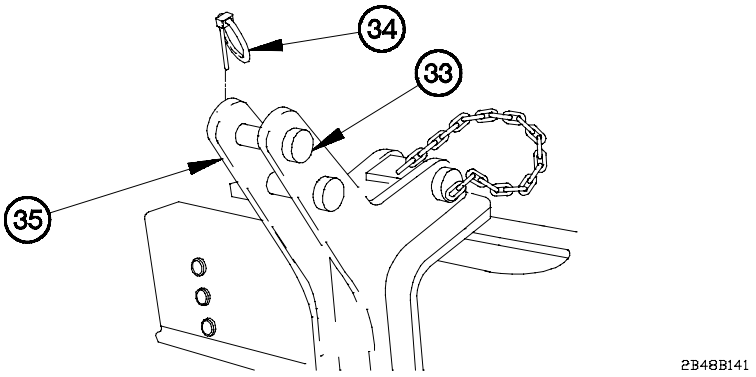

(27) Install shackles on M939/M939A1/M809 tow eyes (TM 9-2320-272-10/TM 9-2320-260-10).

(28) Remove two large pins (33) and lynch pins (34) from tool box.

(29) Install two large pins (33) and lynch pins (34) in two lift tools (35).

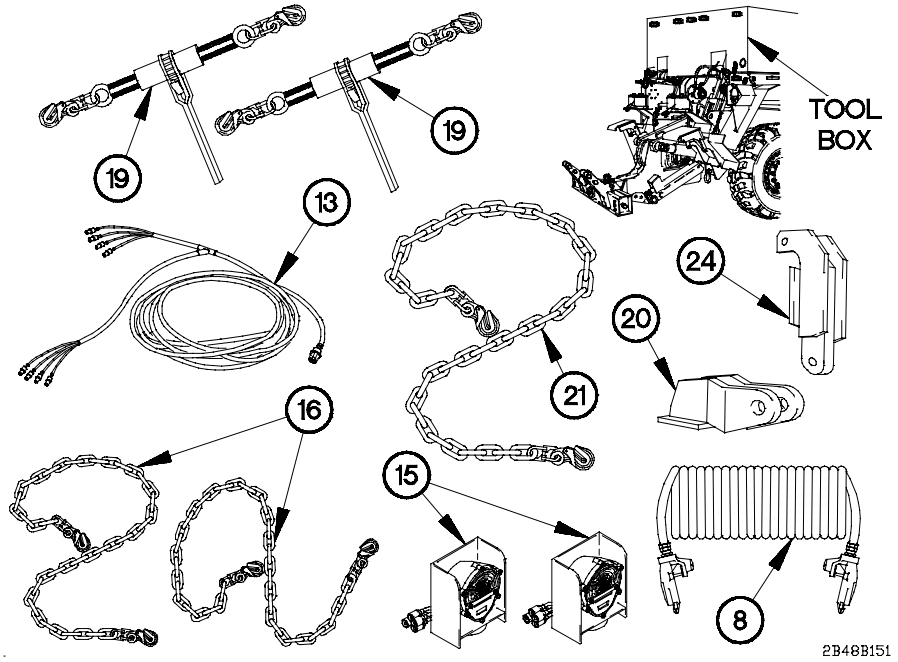

(30) Stow two lifting extensions (24), lower brackets (20), chain (21), two load binders (19), chains (16), emergency tow lights (15), tow lights cable (13), and two intervehicular air hoses (8) in tool box.

2-48. M939/M939A1 AND M809 SERIES TOWING CONNECTION/DISCONNECTION (CONT)

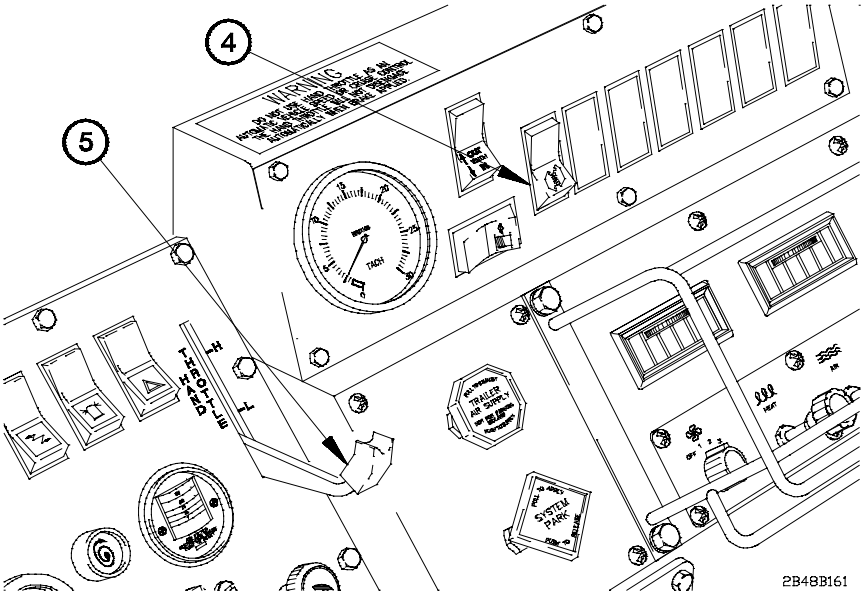

(31) Raise underlift assembly (para 2-44e).

■ (32) Disconnect WRECKER REMOTE CONTROL (para 2-44c).

(33) Set engine speed to idle (750 rpm) by decreasing HAND THROTTLE lever (5) to full down position.

(34) Position PTO switch (4) to off.

(35) Shut down engine (para 2-27f).

(36) Lower and remove two amber warning lights (para 2-74).

c. Rear Connection.

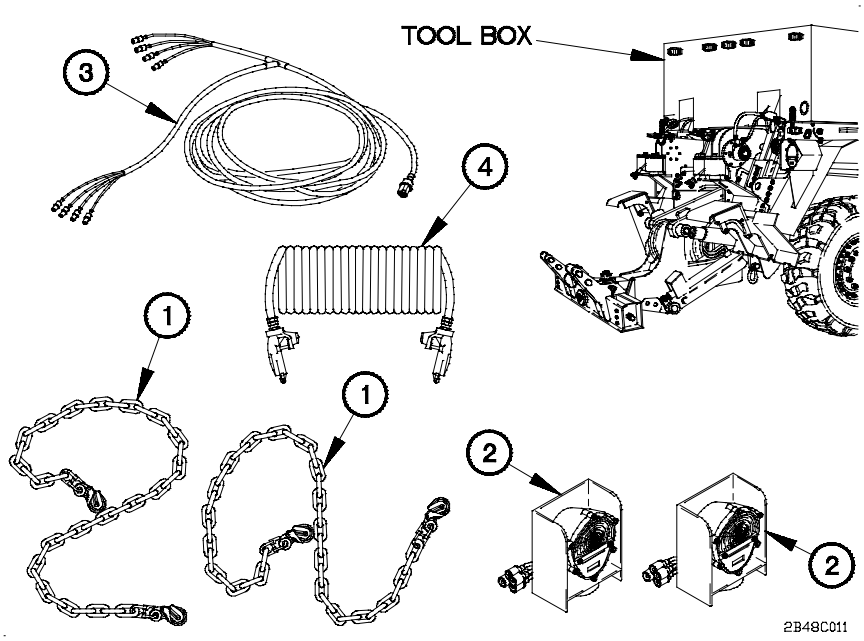

(1) Remove two chains (1), emergency tow lights (2), tow lights cable (3), and two intervehicular air hoses (4) from tool box.

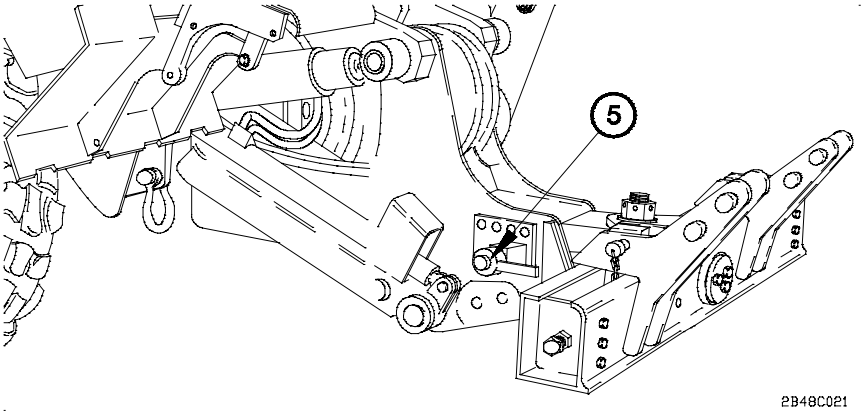

(2) Prepare underlift assembly for operation (para 2-44a).

NOTE

Perform step 3 is assistant is not available to aid in towing connection.

(3) Connect WRECKER REMOTE CONTROL (para 2-44b).

(4) Unlock stinger cam lock (5).

2-48. M939/M939A1 AND M809 SERIES TOWING CONNECTION/DISCONNECTION (CONT)

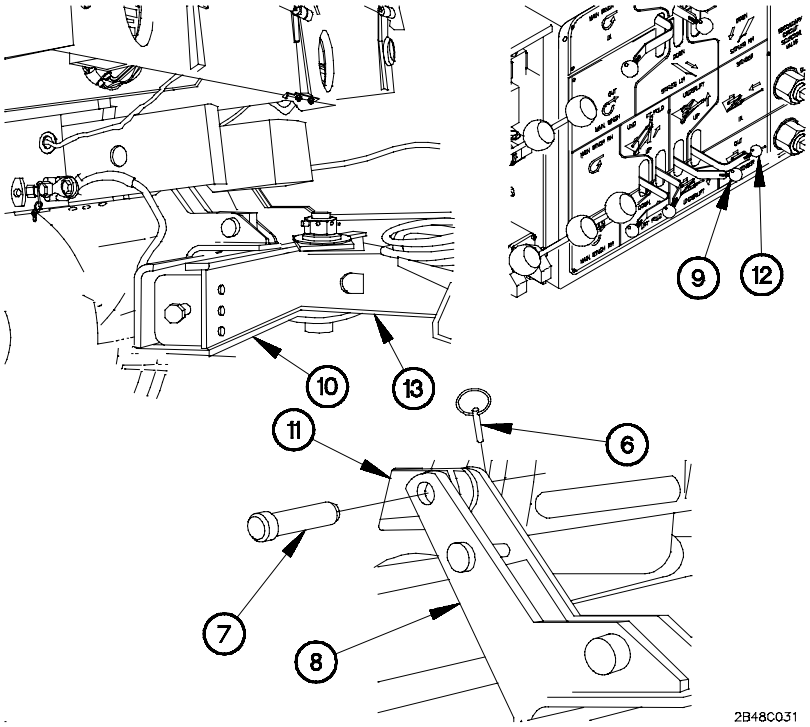

NOTE

Left and right side lift tools are installed on tow eyes the same way. Left side shown.

(5) Remove two top lynch pins (6) and pins (7) from two lift tools (8).

WARNING

Goggles must be worn while operating wrecker control panel. Blowing dust and debris may become airborne while engine is running. Failure to comply may result in injury to personnel.

(6) Place UNDERLIFT lever (9) in the UP position to raise crossbar (10) until lift tools (8) are aligned with M939/M939A1/M809 tow eyes (11).

(7) Place STINGER lever (12) in the OUT position to extend stinger (13) until lift tools (8) are aligned with M939/M939A1/M809 tow eyes (11).

(8) Install two lift tools (8) on M939/M939A1/M809 tow eyes (11) with two pins (7) and lynch pins (6).

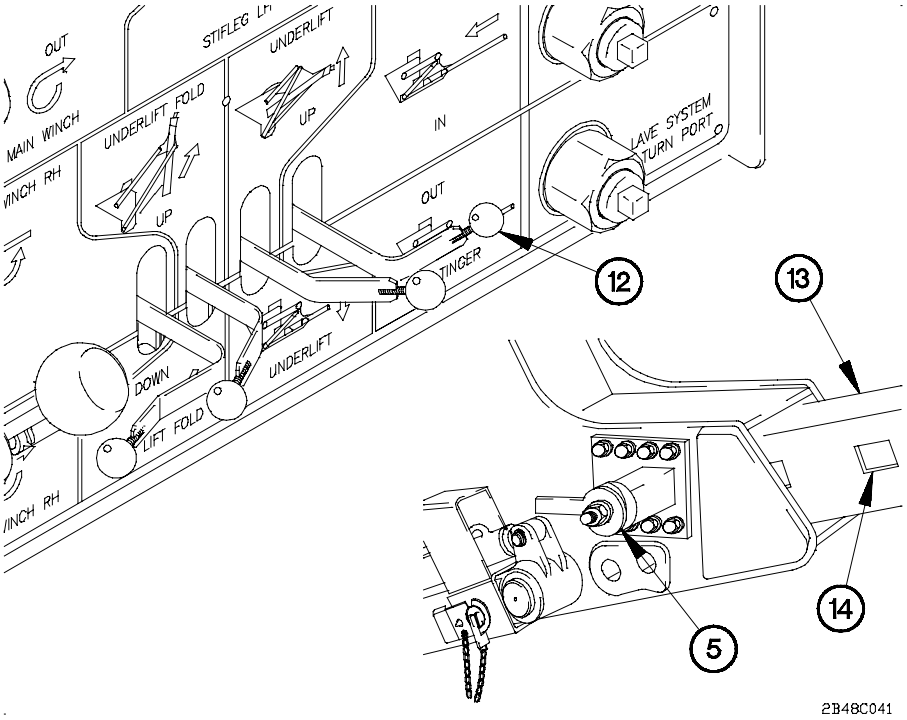

CAUTION

Stinger cam lock is normally locked in second rectangular hole on stinger when towing M939/M939A1/M809. It may be necessary to lock stinger cam lock in third rectangular hole on stinger if components mounted on rear of M939/M939A1/M809 interfere with movement of crossbar. Lock stinger cam lock in hole which will allow crossbar to turn freely. Failure to comply may result in damage to equipment.

(9) Place STINGER lever (12) to IN position to retract stinger (13) until desired stinger cam lock hole (14) is aligned.

(10) Lock stinger cam lock (5).

2-48. M939/M939A1 AND M809 SERIES TOWING CONNECTION/DISCONNECTION (CONT)

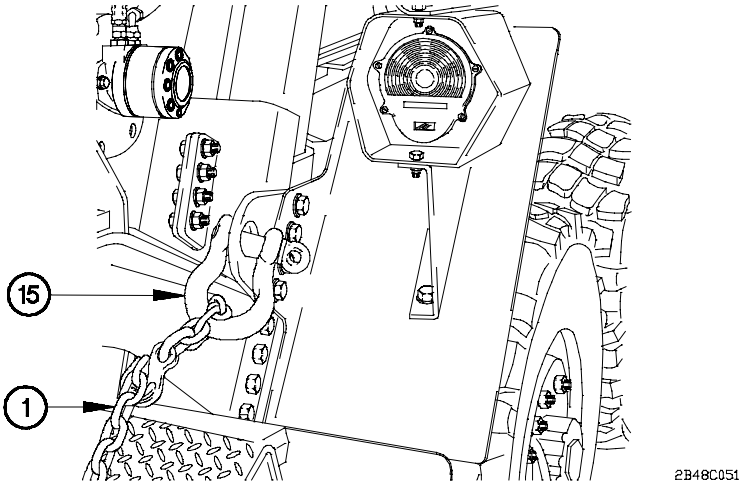

NOTE

Left and right side chains are installed the same way. Right side shown.

(11) Connect one end of two chains (1) to M1089 rear shackles (15).

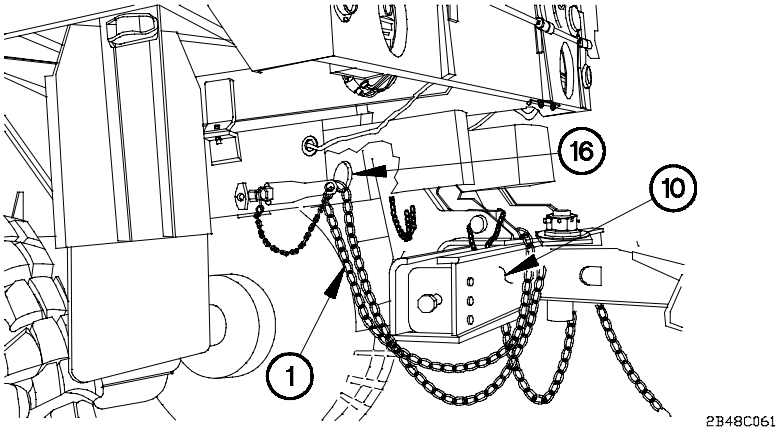

NOTE

Wrap chains around crossbar so that chains are approximately 6-10 in. (15-25 cm) above ground.

(12) Wrap two chains (1) around crossbar (10).

(13) Connect other end of two chains (1) through holes in M939/M939A1/M809 rear cross-member (16).

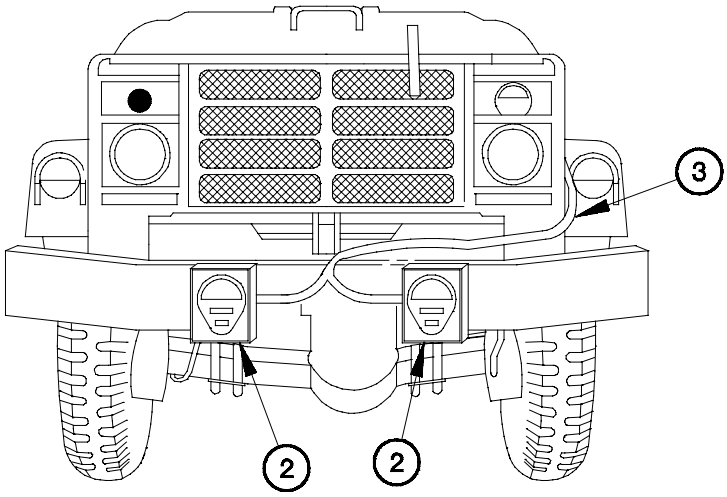

(14) Position two emergency tow lights (2) on front of M939/M939A1/M809.

(15) Connect tow lights cable (3) to two emergency tow lights (2).

(16) Route tow lights cable (3) along top of M939/M939A1/M809.

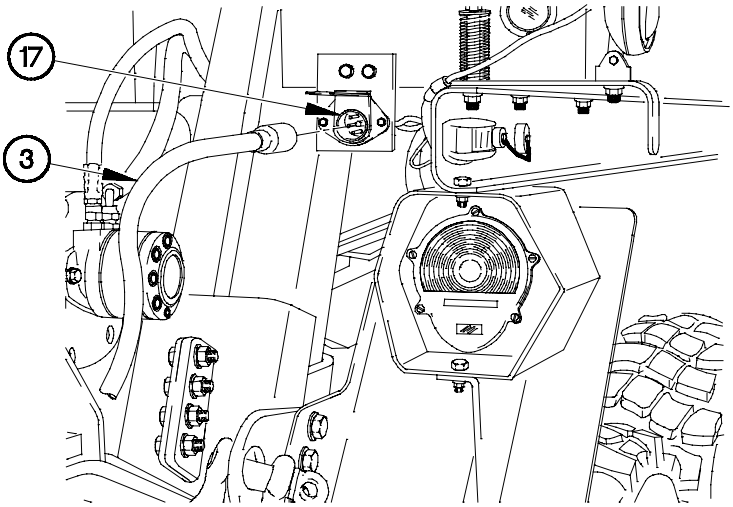

(17) Connect tow lights cable (3) to M1089 rear electrical connector (17).

2-48. M939/M939A1 AND M809 SERIES TOWING CONNECTION/DISCONNECTION (CONT)

(18) Deleted.

(19) Deleted.

(20) Deleted.

(21) Deleted.

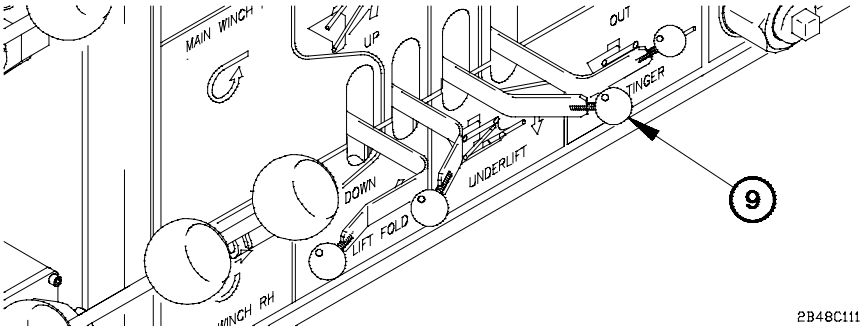

CAUTION

All loose equipment must be secure on M939/M939A1/M809. Failure to comply may result in damage to equipment.

(22) Prepare M939/M939A1/M809 for towing (TM 9-2320-272-10/TM 9-2320-260-10).

WARNING

Keep personnel clear of underlift assembly and disabled vehicle when raising. Disabled vehicle could fall suddenly. Failure to comply may result in serious injury or death to personnel.

(23) Place UNDERLIFT lever (9) in UP position to raise M939/M939A1/M809 until wheels are approximately 16 in. (41 cm) off ground.

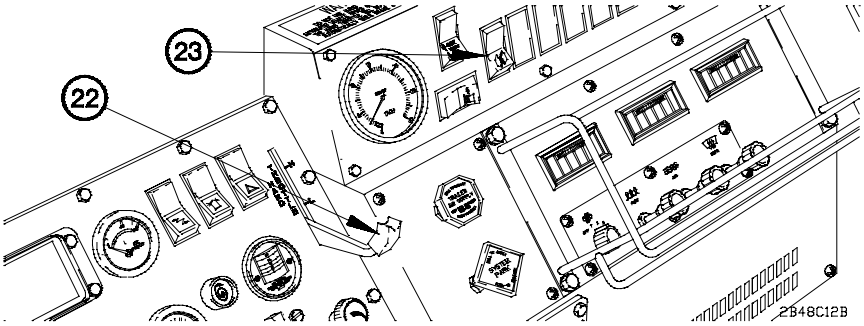

(24) Disconnect WRECKER REMOTE CONTROL (para 2-44c). ■

(25) Set engine speed to idle (750 rpm) by decreasing HAND THROTTLE lever (22) to full down position.

(26) Position PTO switch (23) to off.

2-48. M939/M939A1 AND M809 SERIES TOWING CONNECTION/DISCONNECTION (CONT)

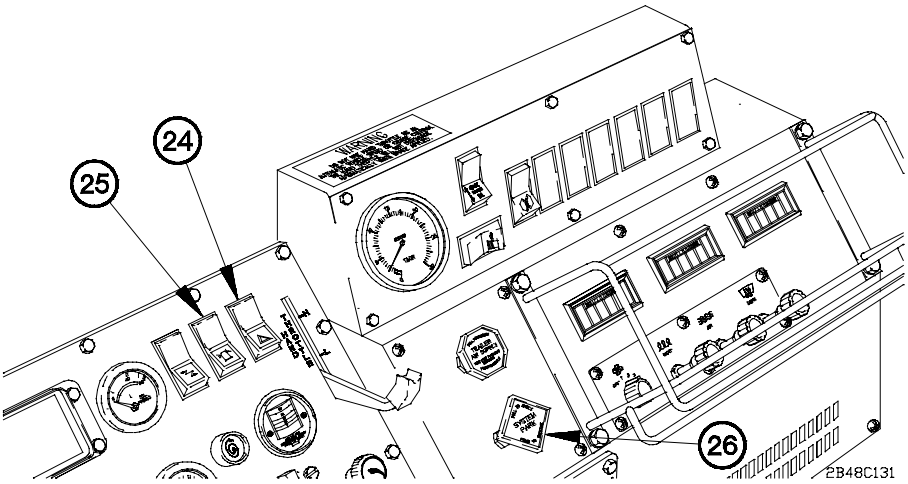

(27) Install and raise two amber warning lights (para 2-74).

(28) Turn on service drive lights (para 2-27c).

(29) Position hazard lights switch (24) to on.

(30) Position amber warning lights switch (25) to on.

(31) Push in SYSTEM PARK control (26).

(32) Set transmission in gear (para 2-27e).

WARNING

M1089 should not be operated at speeds over 15 mph (24 km/h)when towing, except on paved roads when Operator determines that terrain conditions allow safe operation. The following are maximum speeds for safe operation:

TERRAIN CONDITION	MAXIMUM SPEED
on road (level)	35 mph (56 km/h)
on road (hilly)	30 mph (48 km/h)
off road	15 mph (24 km/h)

Failure to comply may result in serious injury or death to personnel or damage to equipment.

(33) Transport M939/M939A1/M809.

d. Rear Disconnection.

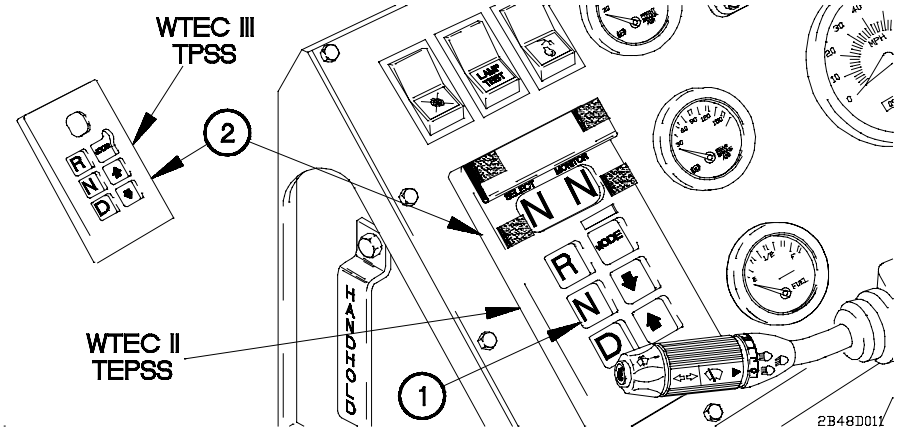

(1) Start engine (para 2-27a or b).

(2) Press N (Neutral) button (1) on WTEC II TEPSS (2) or WTEC III TPSS (2).

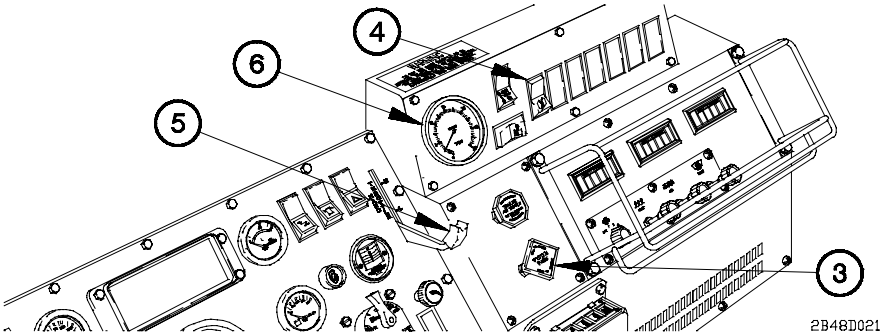

(3) Pull out SYSTEM PARK control (3).

(4) Position PTO switch (4) to on.

CAUTION

Keep tachometer within 1,250-1,450 rpm when Power Take-Off (PTO) is engaged. Failure to comply may result in damage to equipment.

NOTE

In the event of a tachometer failure a HAND THROTTLE lever positioned to L is approximately 1,250-1,450 rpm.

(5) Set engine speed by increasing HAND THROTTLE lever (5) until tachometer (6) reads 1,250-1,450 rpm.

2-48. M939/M939A1 AND M809 SERIES TOWING CONNECTION/DISCONNECTION (CONT)

NOTE

Perform step 6 if assistant is not available to aid in towing connection.

(6) Connect WRECKER REMOTE CONTROL (para 2-44b).

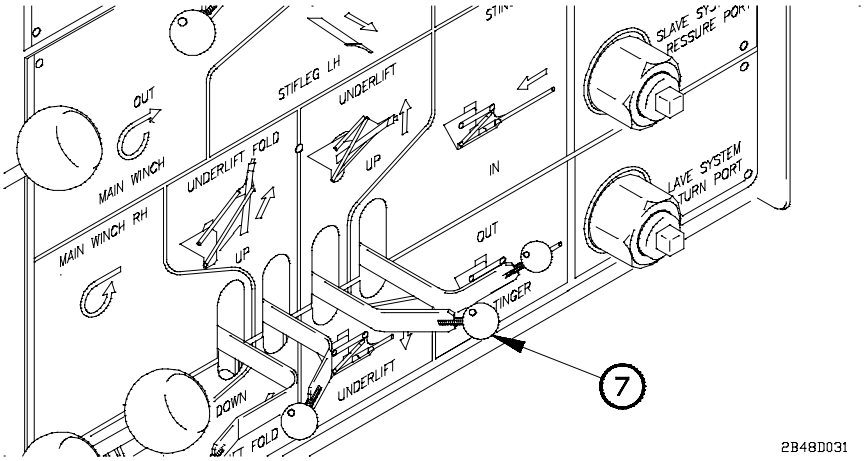

WARNING

- **Keep personnel clear of underlift assembly and disabled vehicle when raising. Disabled vehicle could fall suddenly. Failure to comply may result in serious injury or death to personnel.**
- **Goggles must be worn while operating wrecker control panel. Blowing dust and debris may become airborne while engine is running. Failure to comply may result in injury to personnel.**

(7) Place UNDERLIFT lever (7) in DOWN position to lower M939/M939A1/M809 until wheels are in firm contact with ground.

(8) Set parking brake on M939/M939A1/M809 (TM 9-2320-272-10/TM 9-2320-260-10).

(9) Deleted.

(10) Deleted.

(11) Deleted.

(12) Deleted.

2-48. M939/M939A1 AND M809 SERIES TOWING CONNECTION/DISCONNECTION (CONT)

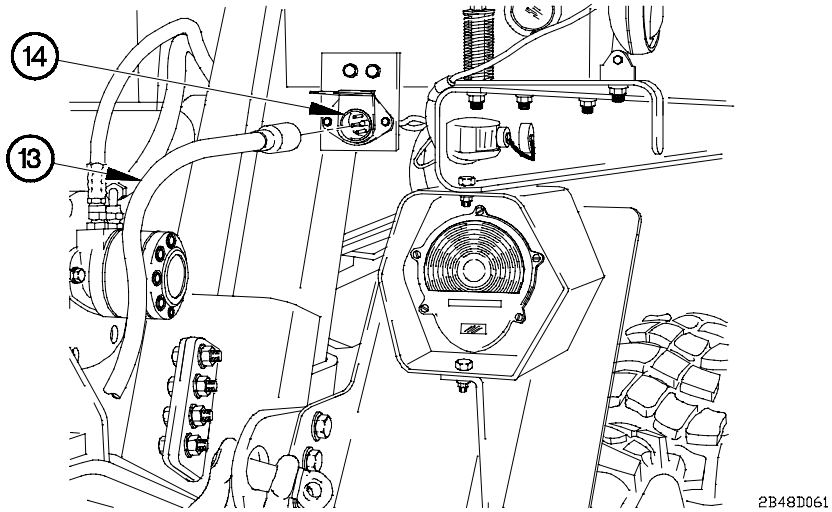

(13) Disconnect tow lights cable (13) from M1089 rear electrical connector (14).

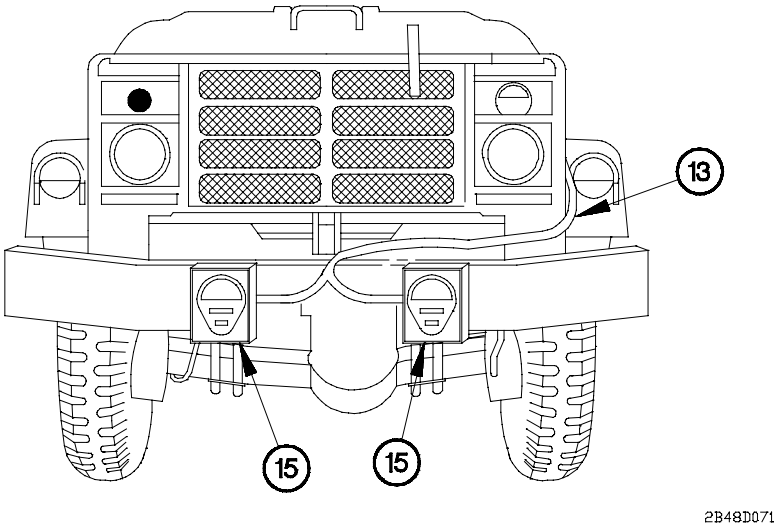

(14) Disconnect tow lights cable (13) from two emergency tow lights (15).

(15) Remove two emergency tow lights (15) from front of M939/M939A1/M809.

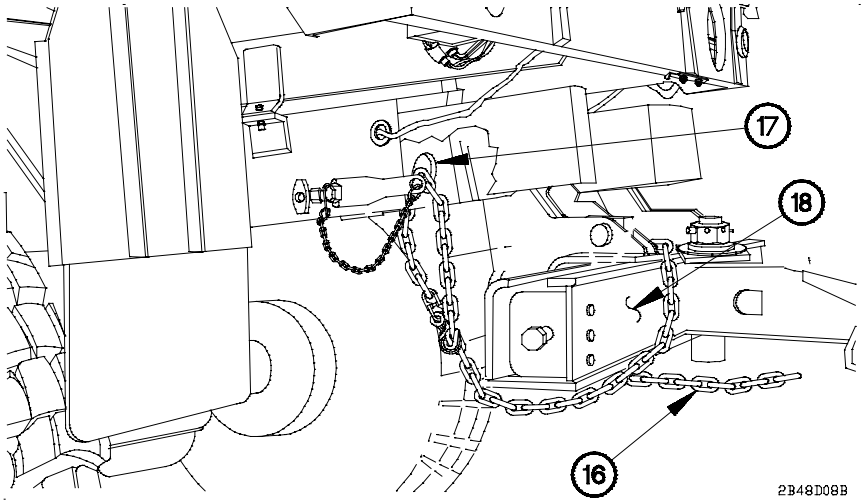

NOTE

Left and right side chains are removed the same way. Right side shown.

(16) Remove two chains (16) from holes in M939/M939A1/M809 rear crossmember (17).

(17) Remove two chains (16) from crossbar (18).

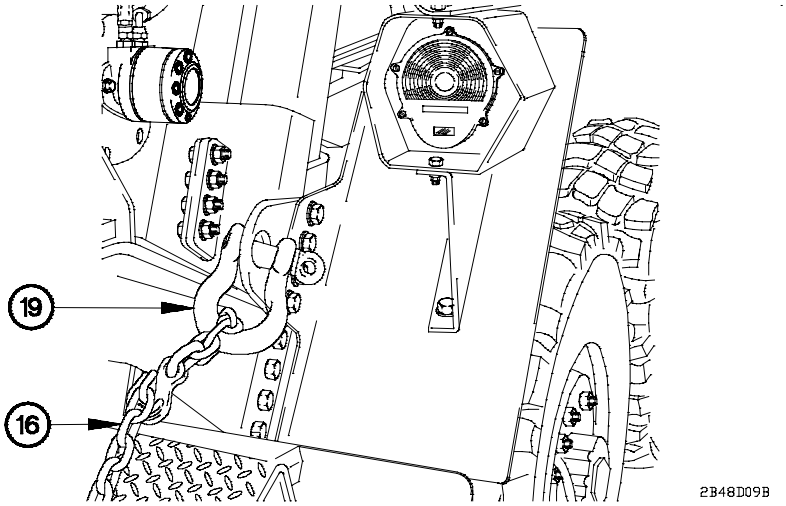

(18) Remove other end of two chains (16) from M1089 rear shackles (19).

2-48. M939/M939A1 AND M809 SERIES TOWING CONNECTION/DISCONNECTION (CONT)

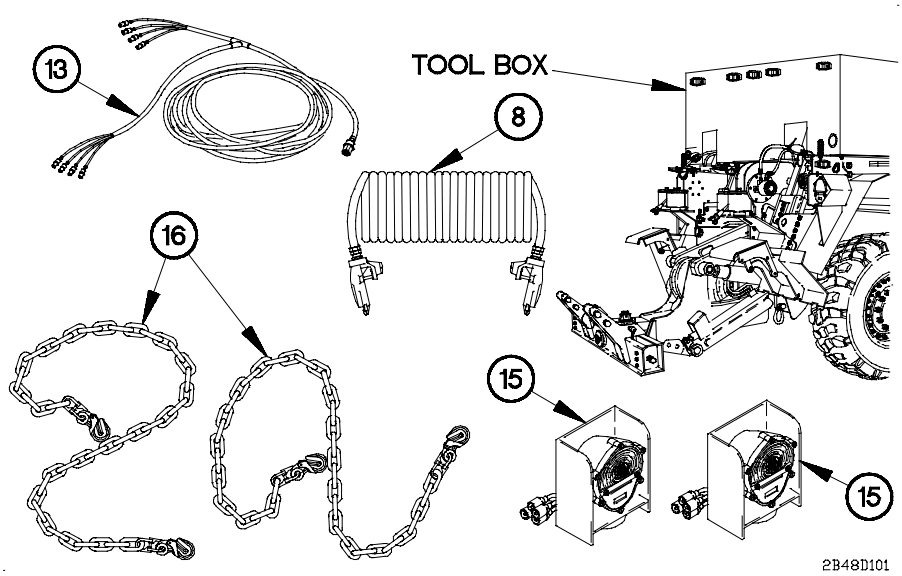

(19) Stow two chains (16), emergency tow lights (15), tow lights cable (13), and two intervehicular air hoses (8) in tool box.

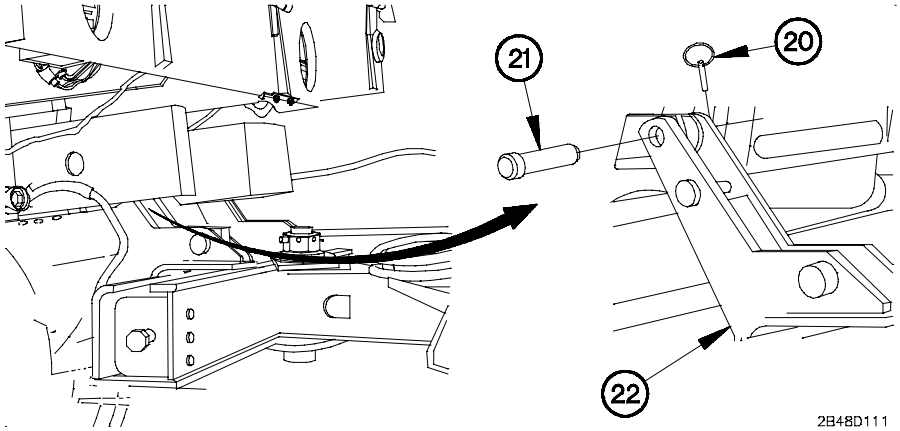

NOTE

Left and right side lift tools are removed the same way. Right side shown.

(20) Remove two lynch pins (20) and pins (21) from two lift tools (22).

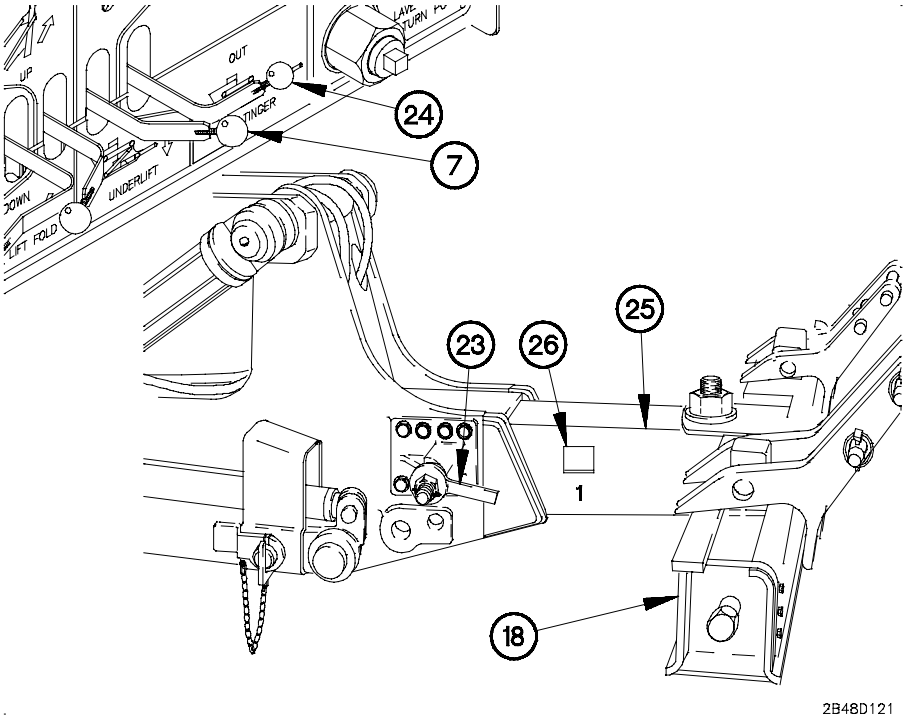

(21) Unlock stinger cam lock (23).

(22) Place STINGER lever (24) to IN position to retract stinger (25) until stinger cam lock (23) is aligned with first hole (26) in stinger.

(23) Place UNDERLIFT lever (7) in the DOWN position until crossbar (18) is fully lowered.

WARNING

Stinger cam lock must be locked in first rectangular hole on stinger before underlift assembly is folded into its stowed position. Crossbar could shift suddenly. Failure to comply may result in injury to personnel.

(24) Lock stinger cam lock (23).

2-48. M939/M939A1 AND M809 SERIES TOWING CONNECTION/DISCONNECTION (CONT)

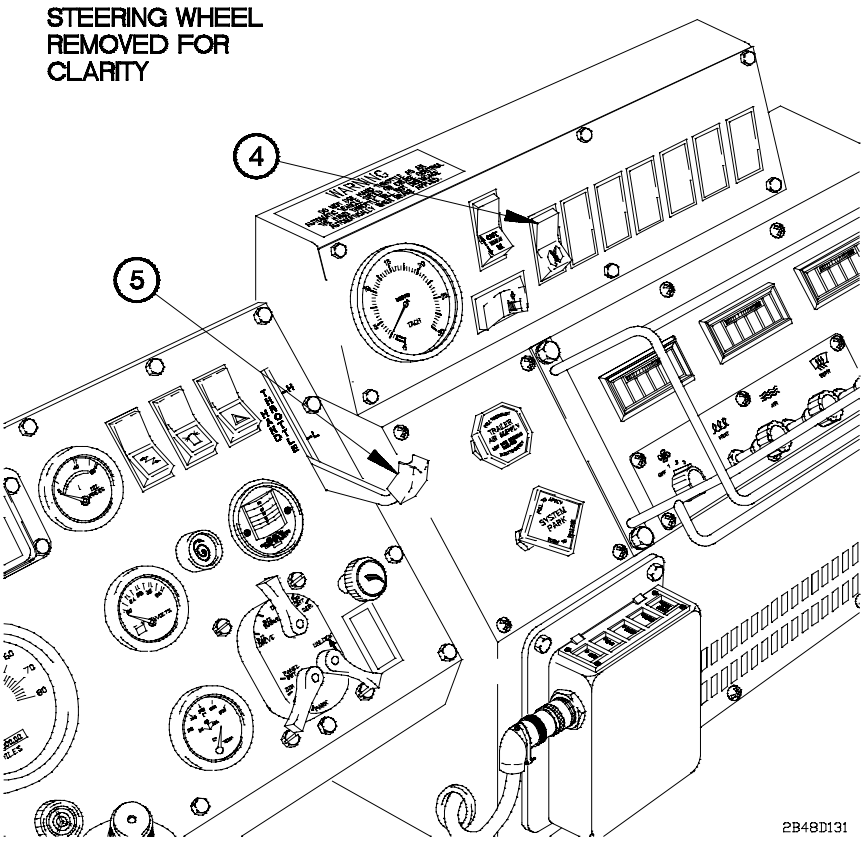

(25) Raise underlift assembly (para 2-44e).

■ (26) Disconnect WRECKER REMOTE CONTROL (para 2-44c).

(27) Set engine speed to idle (750 rpm) by decreasing HAND THROTTLE lever (5) to full down position.

(28) Position PTO switch (4) to off.

(29) Shut down engine (para 2-27f).

(30) Lower and remove two amber warning lights (para 2-74).

2-49. M1078 AND M1083 SERIES TOWING CONNECTION/ DISCONNECTION

a. Front Connection.

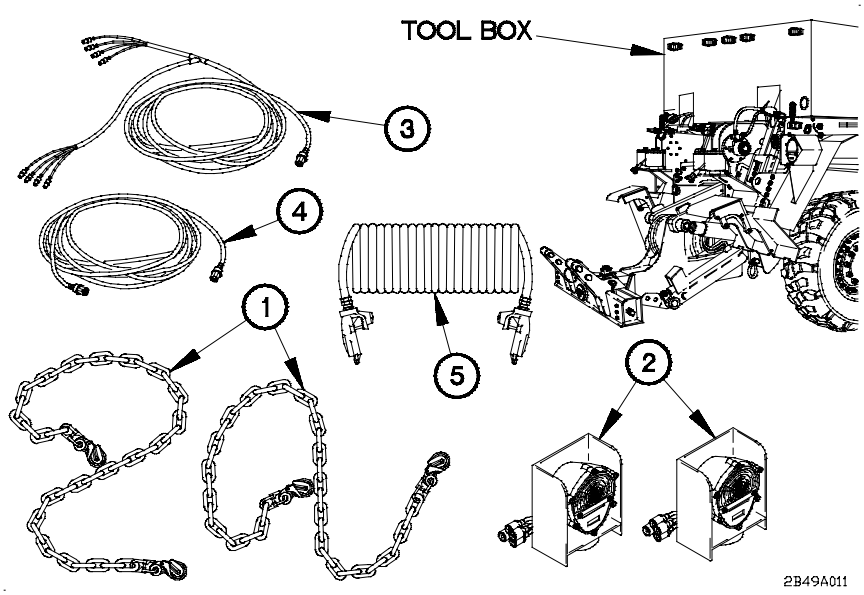

CAUTION

- Intermediate axle driveshaft must be removed on M1083 series vehicles prior to performing a front connection lift and tow. Failure to comply may result in damage to transmission of towed vehicle.

- Rear axle driveshaft must be removed on M1078 series vehicles prior to performing a front connection lift and tow. Failure to comply may result in damage to transmission of towed vehicle.

(1) Notify Unit Maintenance to remove driveshaft.

(1.1) Remove two chains (1), emergency tow lights (2), tow lights cable (3), tow interconnect cable (4), and two intervehicular air hoses (5) from tool box.

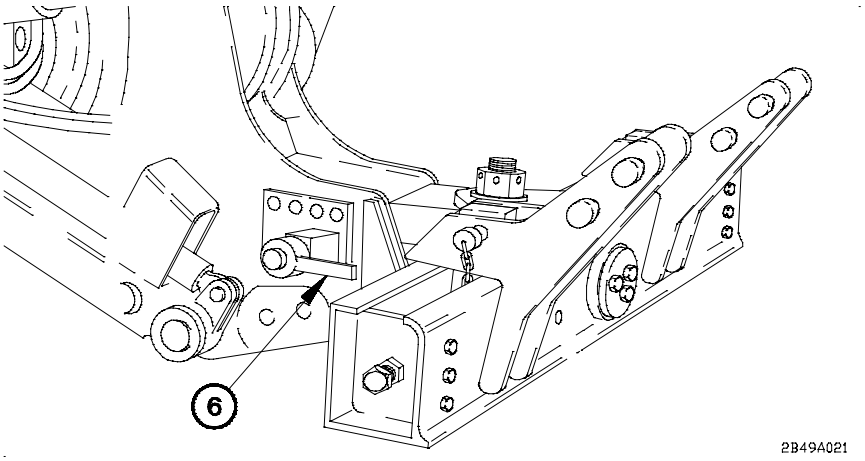

(2) Prepare underlift assembly for operation (para 2-44a).

NOTE

Perform step (3) if assistant is not available to aid in towing connection.

(3) Connect WRECKER REMOTE CONTROL (para 2-44b).

(4) Unlock stinger cam lock (6).

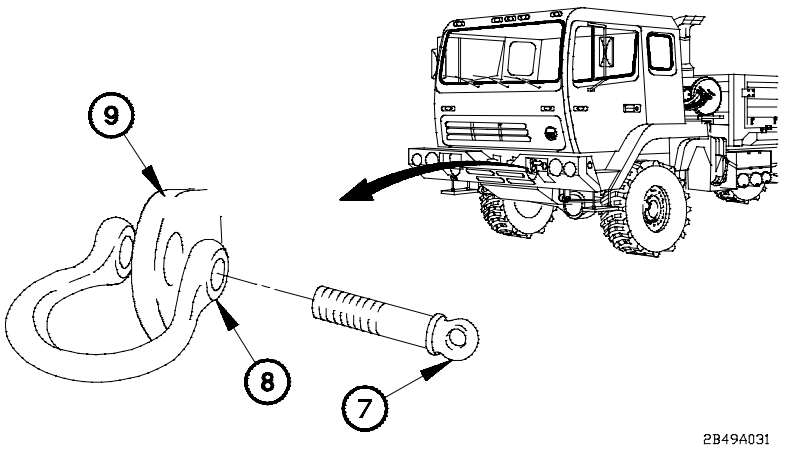

NOTE

Left and right side shackles are removed the same way. Left side shown.

(5) Remove two clevis pins (7) and shackles (8) from M1078/M1083 tow eyes (9).

(6) Stow two shackles (8) and clevis pins (7) in M1078/M1083 cab stowage box.

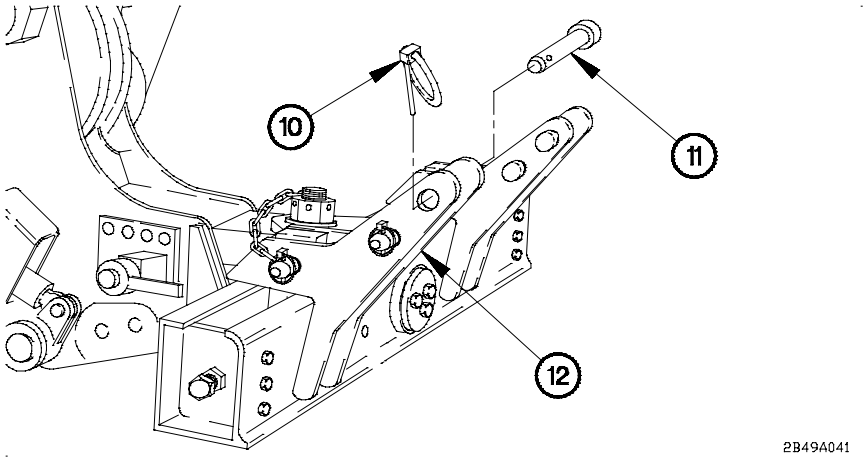

(7) Remove two lynch pins (10) and pins (11) from two lift tools (12).

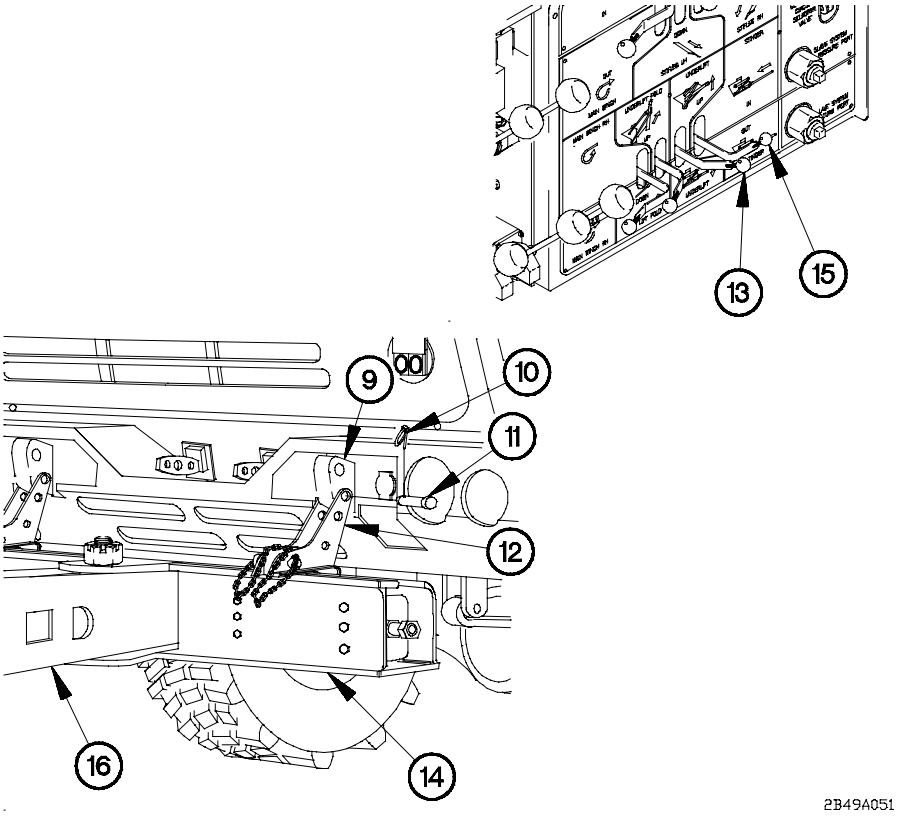

WARNING

Goggles must be worn while operating wrecker control panel. Blowing dust and debris may become airborne while engine is running. Failure to comply may result in injury to personnel.

(8) Place UNDERLIFT lever (13) in UP position to raise crossbar (14) until lift tools (12) are aligned with M1078/M1083 tow eyes (9).

(9) Place STINGER lever (15) in OUT position to extend stinger (16) until lift tools (12) are aligned with M1078/M1083 tow eyes (9).

NOTE

Left and right side lift tools are installed on M1087/M1083 tow eyes the same way. Left side shown.

(10) Install two lift tools (12) on bottom M1078/M1083 tow eyes (9) with pins (11) and lynch pins (10).

2-49. M1078 AND M1083 SERIES TOWING CONNECTION/ DISCONNECTION (CONT)

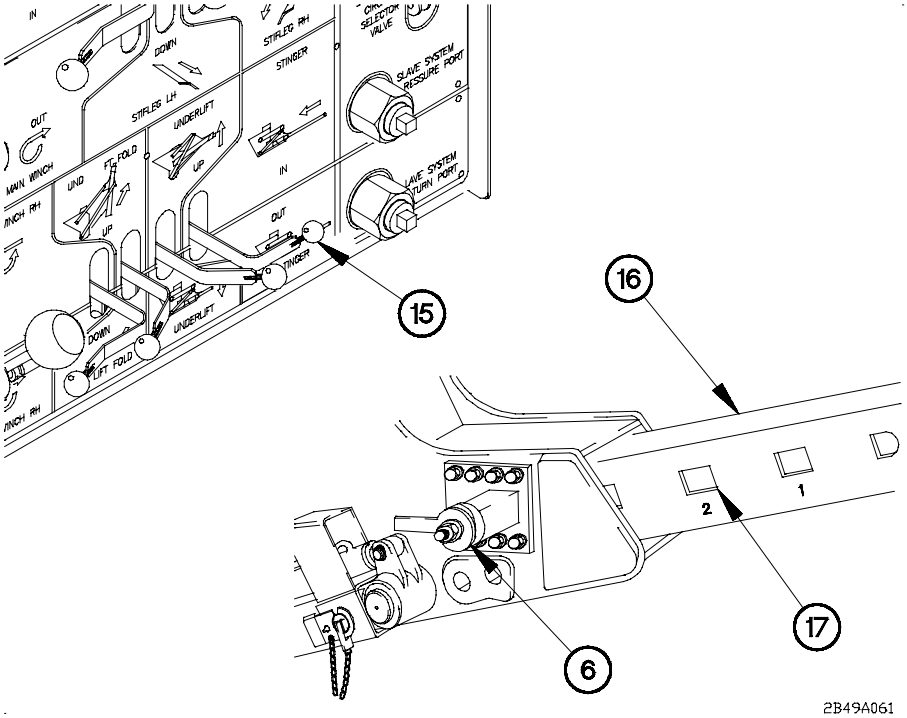

CAUTION

- Stinger cam lock is normally locked in second rectangular hole on stinger when towing an M1078/M1083. It may be necessary to lock stinger cam lock in third rectangular hole on stinger if winches or other components mounted on front of M1078/M1083 interfere with movement of crossbar. Lock stinger cam lock in hole which will allow crossbar to rotate freely. Failure to comply may result in damage to equipment.

- It may be necessary to start with holes 4 or 5 on stinger when recovering a vehicle on uneven ground. Once level ground is reached, lock stinger in second hole. Failure to comply may result in damage to equipment.

(11) Place STINGER lever (15) to IN position to retract stinger (16) until stinger cam lock holes (17) are aligned.

(12) Lock stinger cam lock (6).

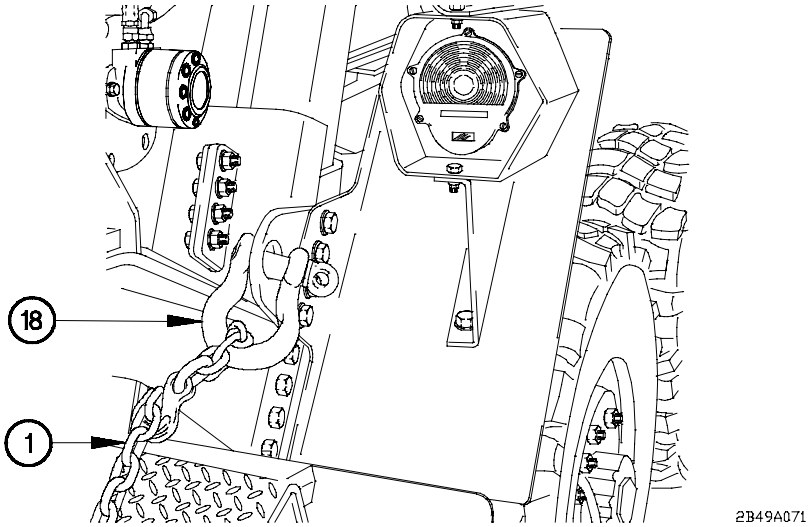

NOTE

Left and right side chains are installed the same way. Right side shown.

(13) Connect one end of two chains (1) to M1089 rear shackles (18).

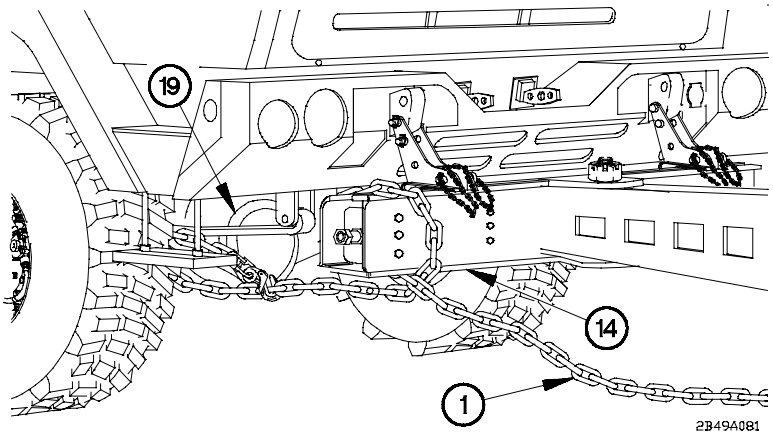

NOTE

Wrap chains around crossbar so that chains are approximately 6-10 in. (15-25 cm) above ground.

(14) Wrap two chains (1) around crossbar (14).

(15) Connect other end of two chains (1) to M1078/M1083 front axle (19).

2-49. M1078 AND M1083 SERIES TOWING CONNECTION/ DISCONNECTION (CONT)

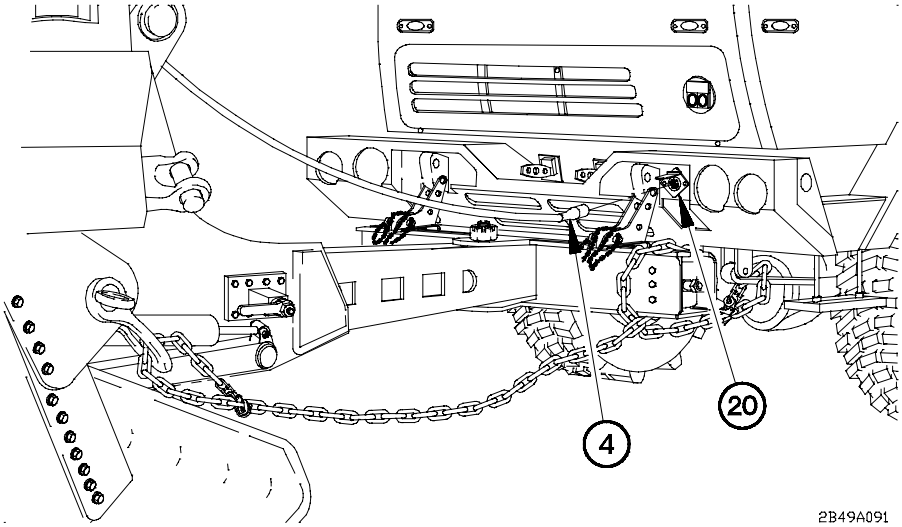

NOTE

Perform steps (16) and (17) if M1078/M1083 electrical system and composite taillights are undamaged.

(16) Connect tow interconnect cable (4) to M1078/M1083 front electrical connector (20).

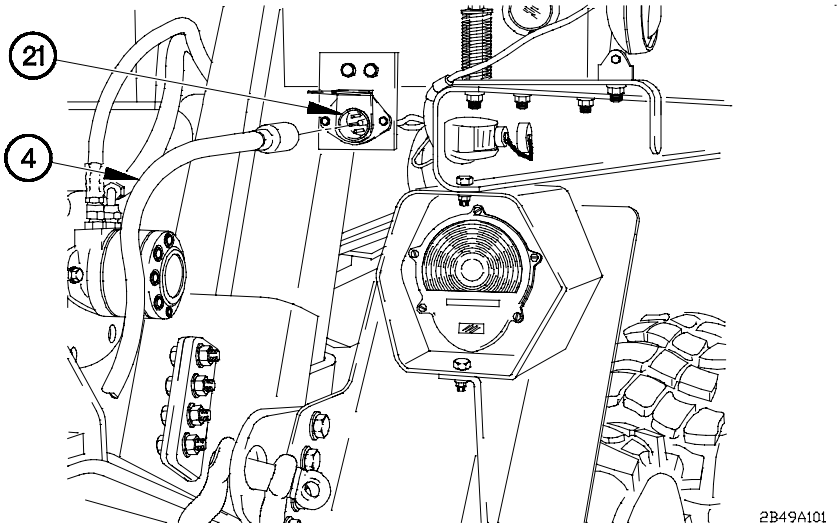

(17) Connect tow interconnect cable (4) to M1089 rear electrical connector (21).

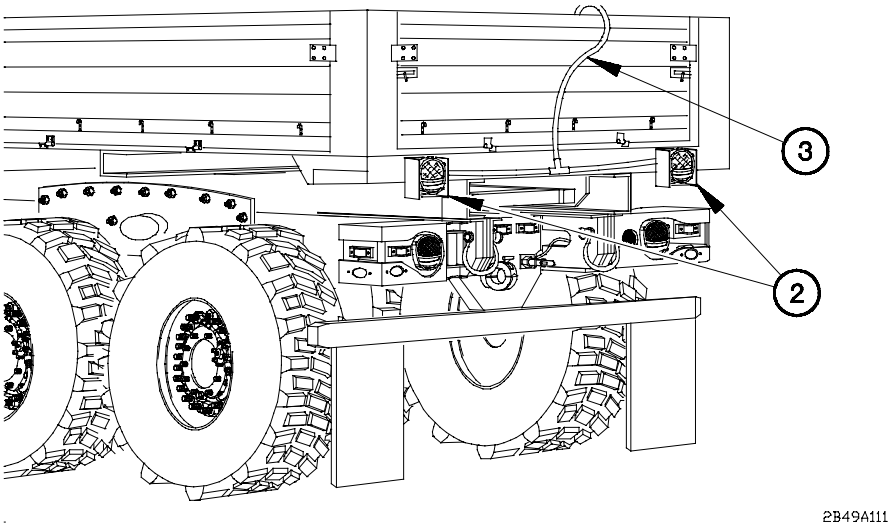

NOTE

Perform steps (18) through (21) if M1078/M1083 electrical system or composite taillights are damaged.

(18) Position two emergency tow lights (2) on rear of M1078/M1083.

(19) Connect tow lights cable (3) to two emergency tow lights (2).

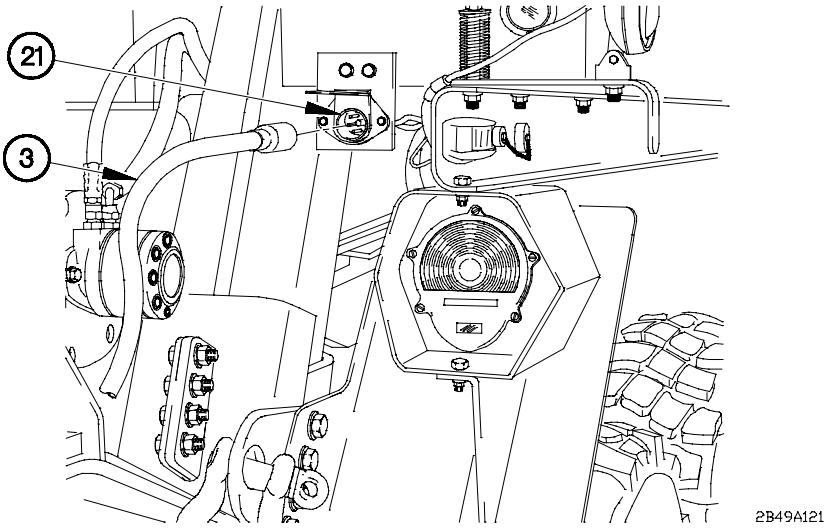

(20) Route tow lights cable (3) along top of M1078/M1083.

(21) Connect tow lights cable (3) to M1089 rear electrical connector (21).

2-49. M1078 AND M1083 SERIES TOWING CONNECTION/ DISCONNECTION (CONT)

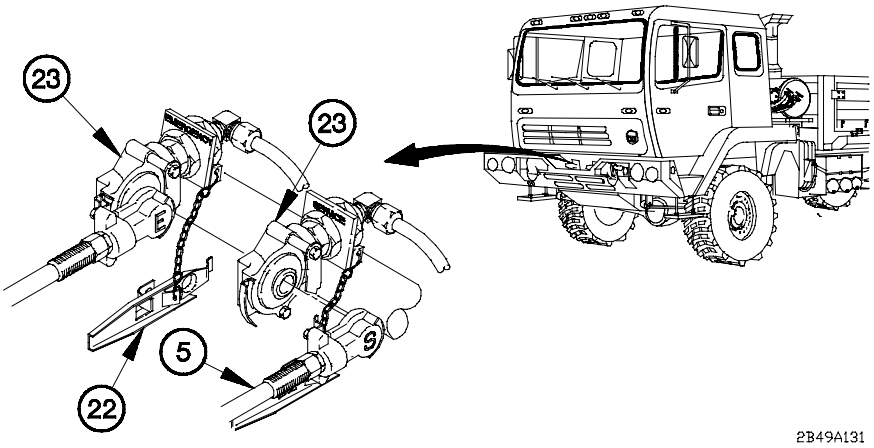

(22) Remove two dummy connectors (22) from M1078/M1083 gladhands (23).

NOTE

Service and emergency intervehicular air hoses are connected the same way. Service intervehicular air hose shown.

(23) Connect two intervehicular air hoses (5) to M1078/M1083 gladhands (23).

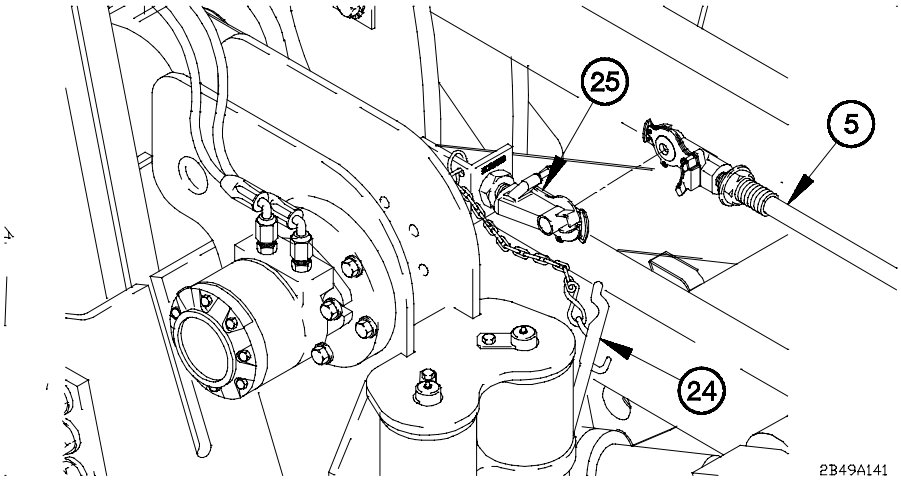

(24) Remove two dummy connectors (24) from M1089 gladhands (25).

(25) Connect two intervehicular air hoses (5) to M1089 gladhands (25).

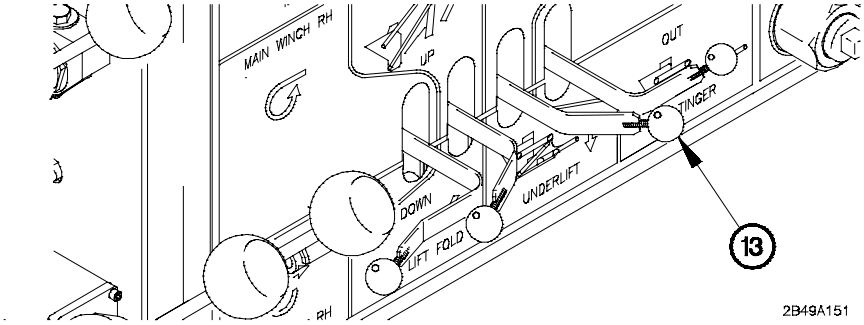

CAUTION

All loose equipment must be secure on M1078/M1083. Failure to comply may result in damage to equipment.

(26) Prepare M1078/M1083 for towing (para 2-62b).

WARNING

Keep personnel clear of underlift assembly and disabled vehicle when raising. Disabled vehicle could fall suddenly. Failure to comply may result in serious injury or death to personnel.

(27) Place UNDERLIFT lever (13) in UP position to raise M1078/M1083 until wheels are approximately 16 in. (41 cm) off ground.

(28) Disconnect WRECKER REMOTE CONTROL (para 2-44c).

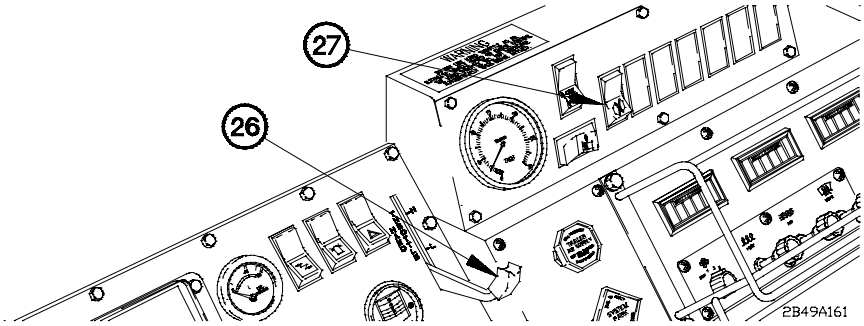

(29) Set engine speed to idle (750 rpm) by decreasing HAND THROTTLE lever (26) to full down position.

(30) Position PTO switch (27) to off.

2-49. M1078 AND M1083 SERIES TOWING CONNECTION/ DISCONNECTION (CONT)

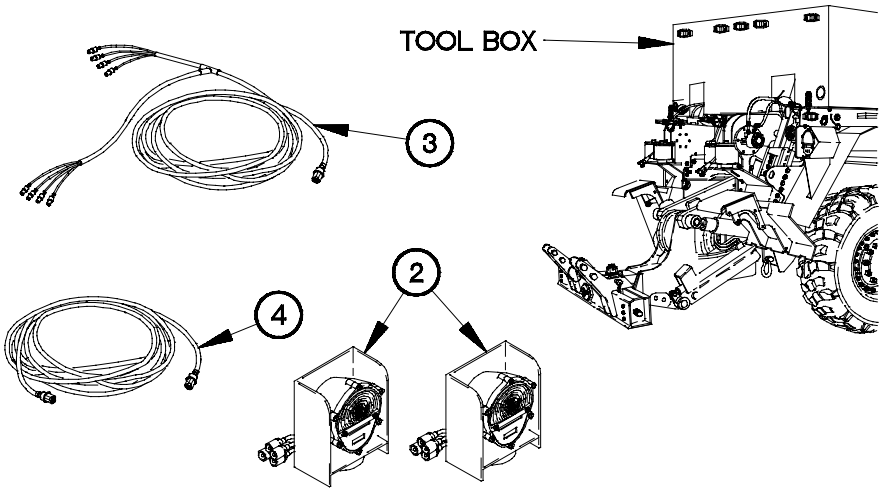

(31) Stow unused tow interconnect cable (4) or tow lights cable (3) and two emergency tow lights (2) in tool box.

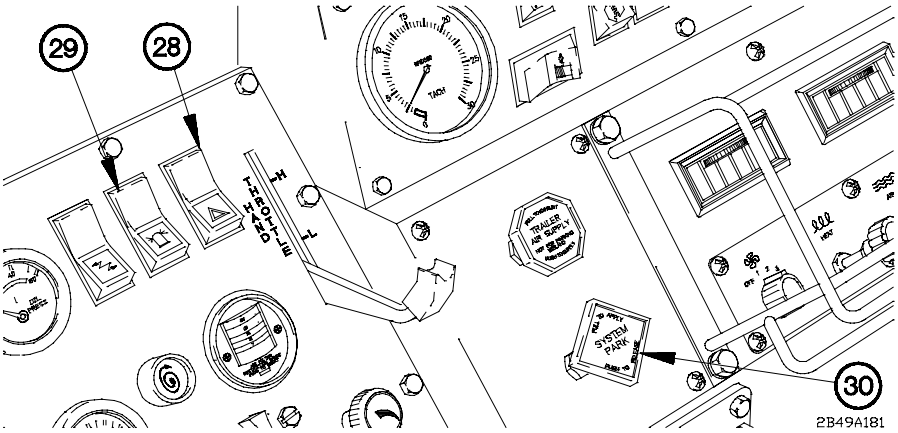

(32) Install and raise two amber warning lights (para 2-74).

(33) Turn on service drive lights (para 2-27c).

(34) Position hazard lights switch (28) to on.

(35) Position amber warning lights switch (29) to on.

(36) Push in SYSTEM PARK control (30).

(37) Set transmission in gear (para 2-27e).

WARNING

M1089 should not be operated at speeds over 15 mph (24 km/h) when towing, except on paved roads when Operator determines that terrain conditions allow safe operation. The following are maximum speeds for safe operation:

TERRAIN CONDITION	MAXIMUM SPEED
on road (level)	35 mph (56 km/h)
on road (hilly)	30 mph (48 km/h)
off road	15 mph (24 km/h)

Failure to comply may result in serious injury or death to personnel or damage to equipment.

(38) Transport M1078/M1083.

b. Front Disconnection.

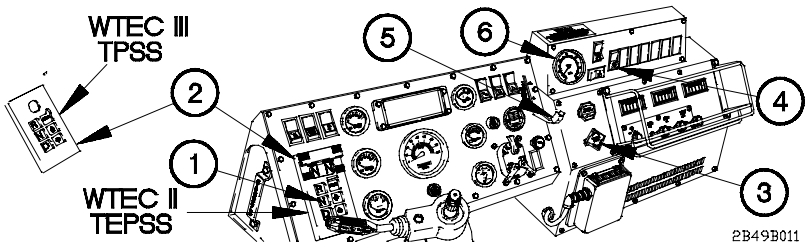

(1) Start engine (para 2-27a or b).

(2) Press N (Neutral) button (1) on WTEC II TEPSS (2) or WTEC III TPSS (2).

(3) Pull out SYSTEM PARK control (3).

(4) Position PTO switch (4) to on.

CAUTION

Keep tachometer within 1,250-1,450 rpm when Power Take-Off (PTO) is engaged. Failure to comply may result in damage to equipment.

NOTE

In the event of a tachometer failure a HAND THROTTLE lever positioned to L is approximately 1,250-1,450 rpm.

(5) Set engine speed by increasing HAND THROTTLE lever (5) until tachometer (6) reads 1,250-1,450 rpm.

2-49. M1078 AND M1083 SERIES TOWING CONNECTION/ DISCONNECTION (CONT)

NOTE

Perform step 6 if assistant is not available to aid in towing connection.

(6) Connect WRECKER REMOTE CONTROL (para 2-44b).

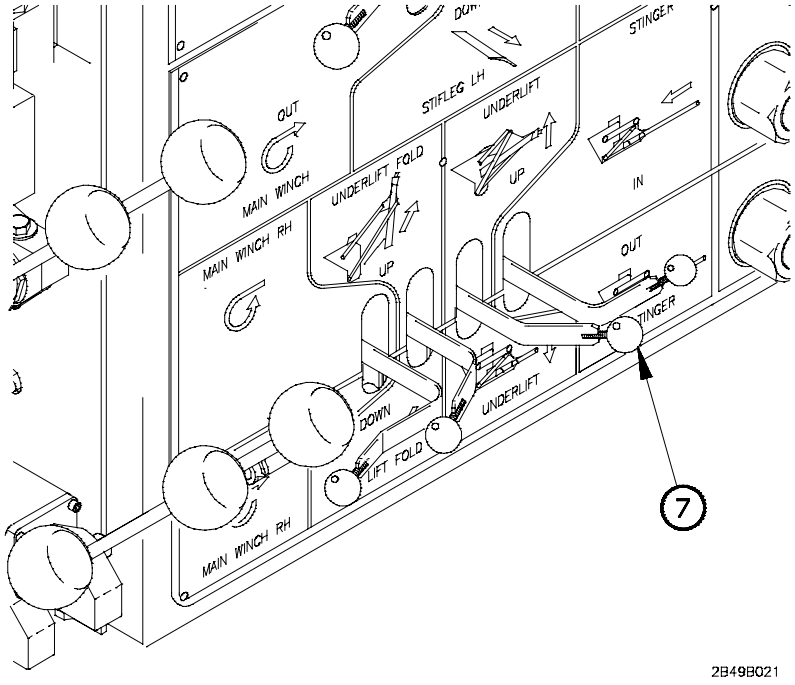

WARNING

- **Keep personnel clear of underlift assembly and disabled vehicle when raising. Disabled vehicle could fall suddenly. Failure to comply may result in serious injury or death to personnel.**
- **Goggles must be worn while operating wrecker control panel. Blowing dust and debris may become airborne while engine is running. Failure to comply may result in injury to personnel.**

(7) Place UNDERLIFT lever (7) in DOWN position to lower M1078/M1083 until wheels are in firm contact with ground.

(8) Set SYSTEM PARK control on M1078/M1083 (para 2-27f).

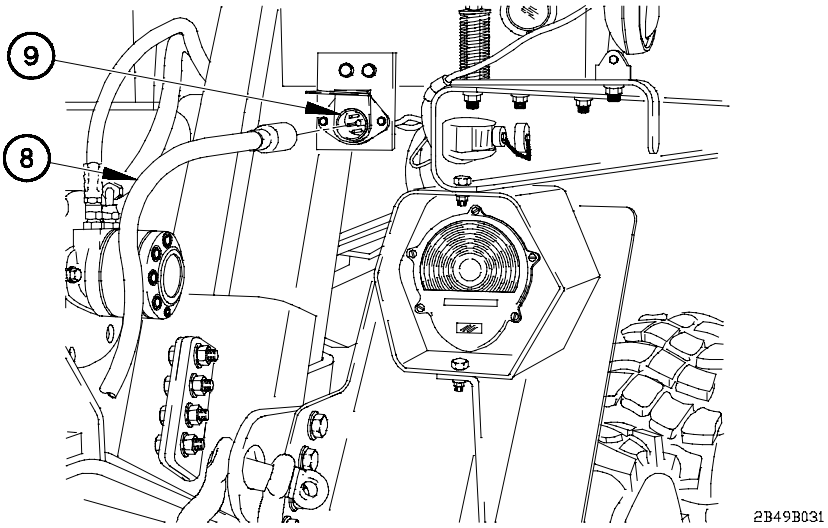

NOTE

Perform steps (9) through (11) if tow lights cable and emergency tow lights were used due to damaged M1078/M1083 electrical system or composite taillights.

(9) Disconnect tow lights cable (8) from M1089 rear electrical connector (9).

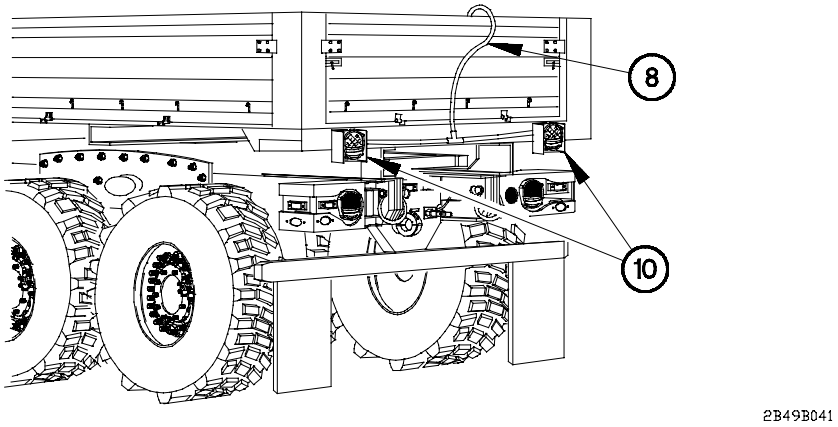

(10) Disconnect tow lights cable (8) from two emergency tow lights (10).

(11) Remove two emergency tow lights (10) from rear of M1078/M1083.

2-49. M1078 AND M1083 SERIES TOWING CONNECTION/ DISCONNECTION (CONT)

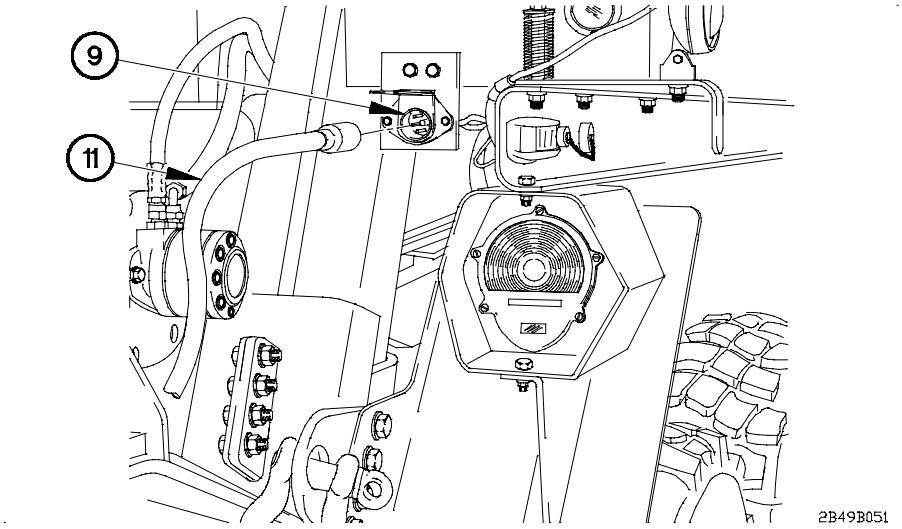

NOTE

Perform steps (12) and (13) if tow interconnect cable was used to power M1078/M1083 composite taillights.

(12) Disconnect tow interconnect cable (11) from M1089 rear electrical connector (9).

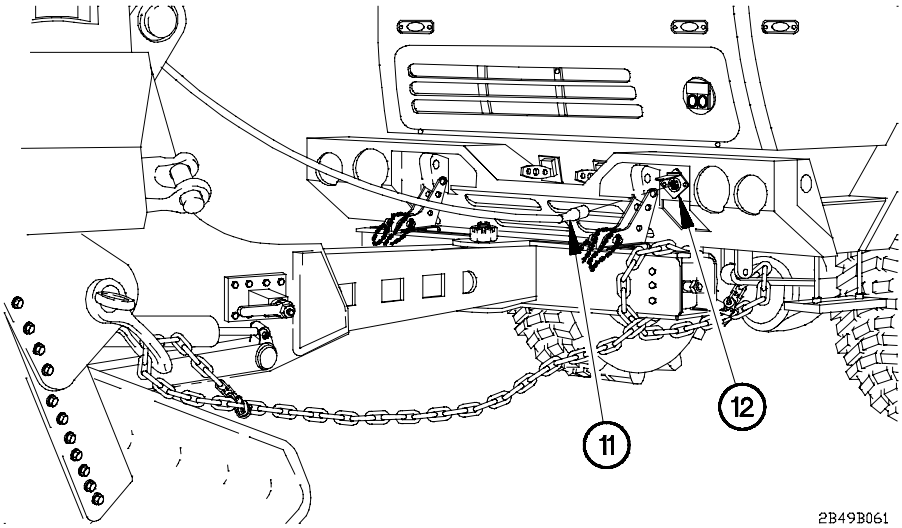

(13) Disconnect tow interconnect cable (11) from M1078/M1083 front electrical connector (12).

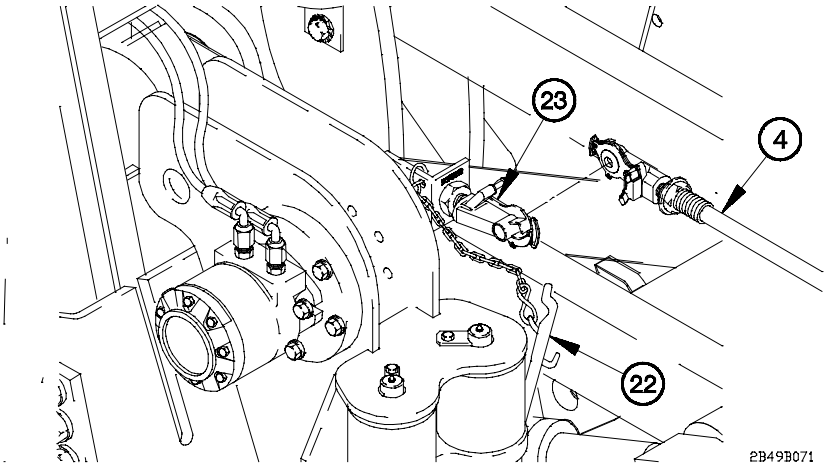

NOTE

Service and emergency intervehicular air hoses are disconnected the same way. Service intervehicular air hose shown.

(14) Disconnect two intervehicular air hoses (13) from M1089 gladhands (14).

(15) Install two dummy connectors (15) on M1089 gladhands (14).

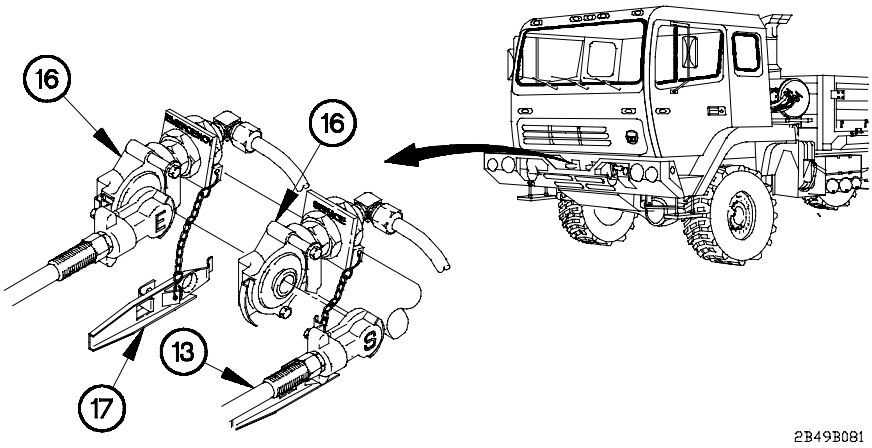

(16) Disconnect two intervehicular air hoses (13) from M1078/M1083 gladhands (16).

(17) Install two dummy connectors (17) on M1078/M1083 gladhands (16).

2-49. M1078 AND M1083 SERIES TOWING CONNECTION/ DISCONNECTION (CONT)

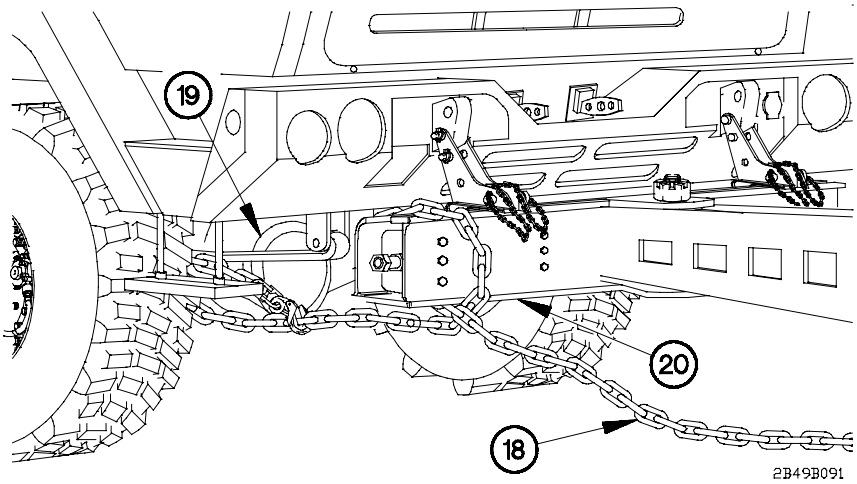

NOTE

Left and right side chains are removed the same way. Right side shown.

(18) Remove two chains (18) from M1078/M1083 front axle (19).

(19) Remove two chains (18) from crossbar (20).

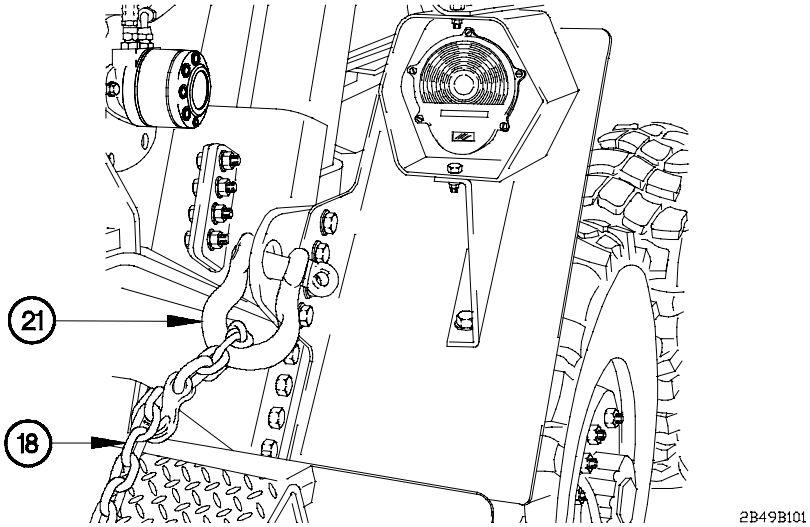

(20) Remove other end of two chains (18) from M1089 rear shackles (21).

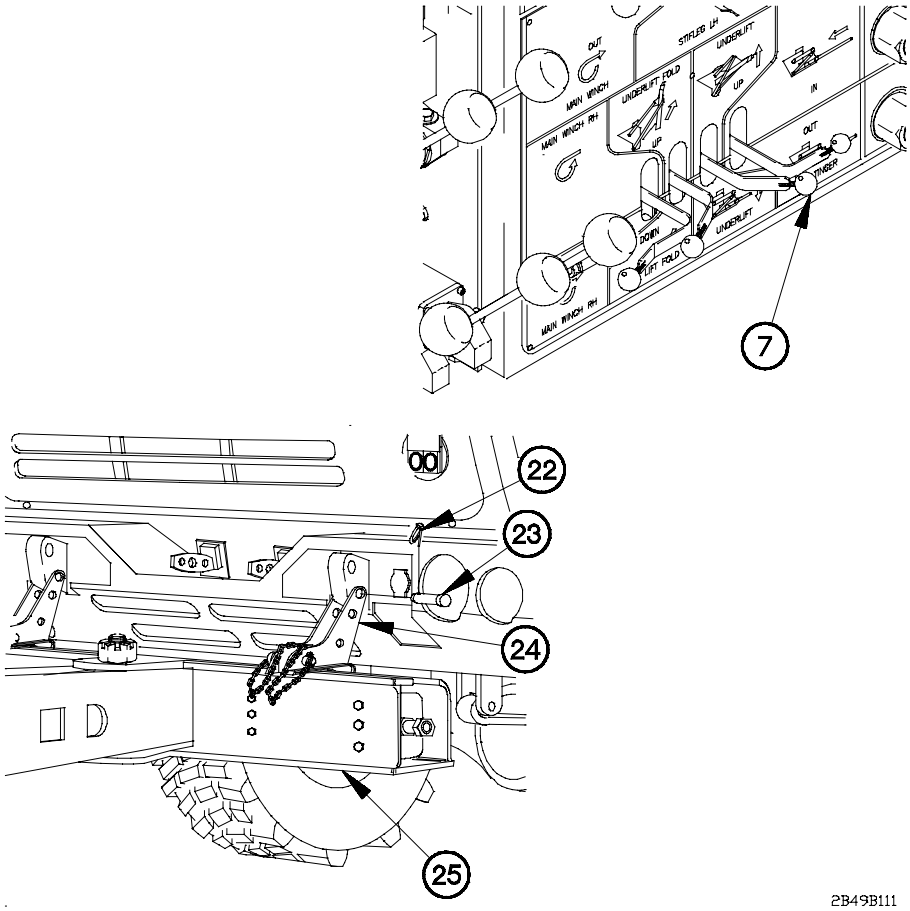

NOTE

Left and right side lift tools are removed from towed vehicle the same way. Left side shown.

(21) Remove two lynch pins (22) and pins (23) from two lift tools (24).

(22) Place UNDERLIFT lever (7) in the DOWN position until crossbar (25) is fully lowered.

2-49. M1078 AND M1083 SERIES TOWING CONNECTION/ DISCONNECTION (CONT)

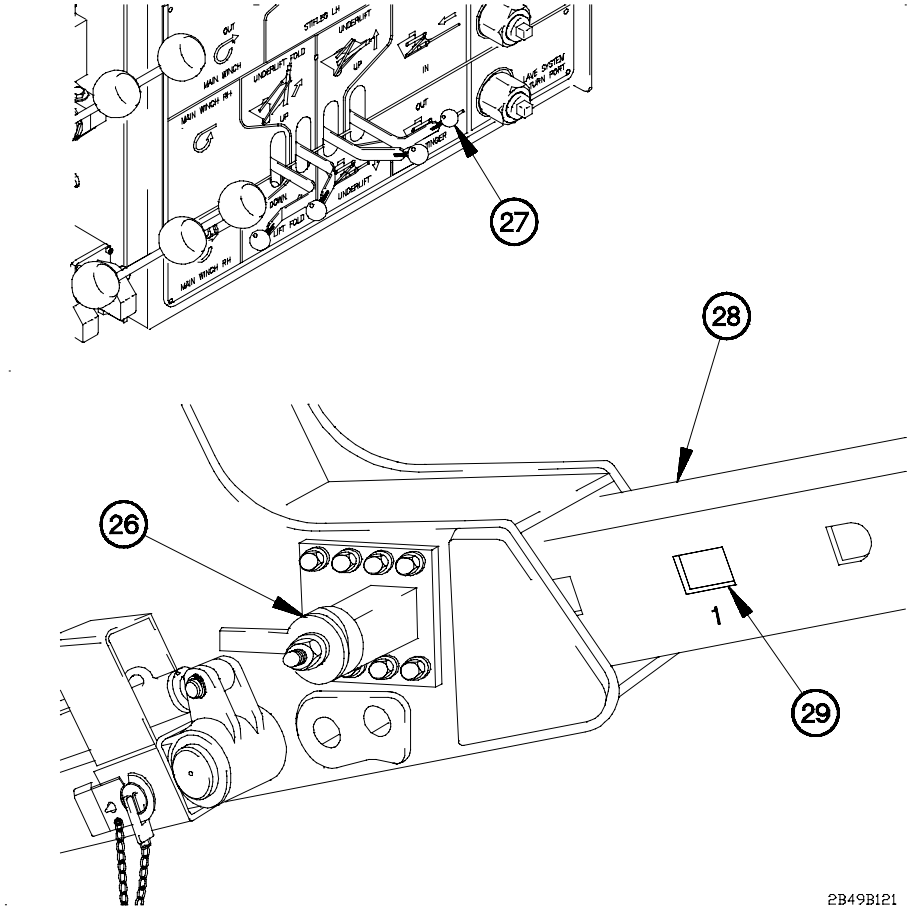

WARNING

Stinger cam lock must be locked in first rectangular hole on stinger before underlift assembly is folded into its stowed position. Crossbar could shift suddenly. Failure to comply may result in injury to personnel.

(23) Unlock stinger cam lock (26).

(24) Place STINGER lever (27) to IN position to retract stinger (28) until stinger cam lock (26) is aligned with first hole (29) in stinger.

(25) Lock stinger cam lock (26).

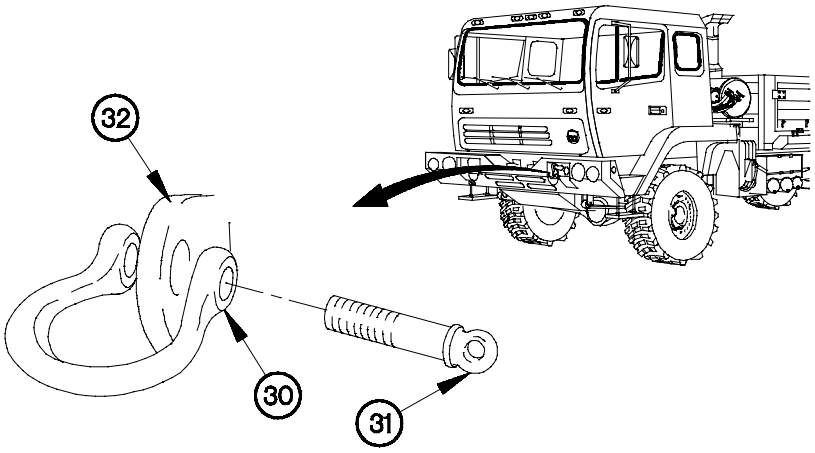

(26) Remove two shackles (30) and clevis pins (31) from M1078/M1083 cab stowage box.

NOTE

Left and right side shackles are installed the same way. Left side shown.

(27) Install two shackles (30) on M1078/M1083 tow eyes (32) with clevis pins (31).

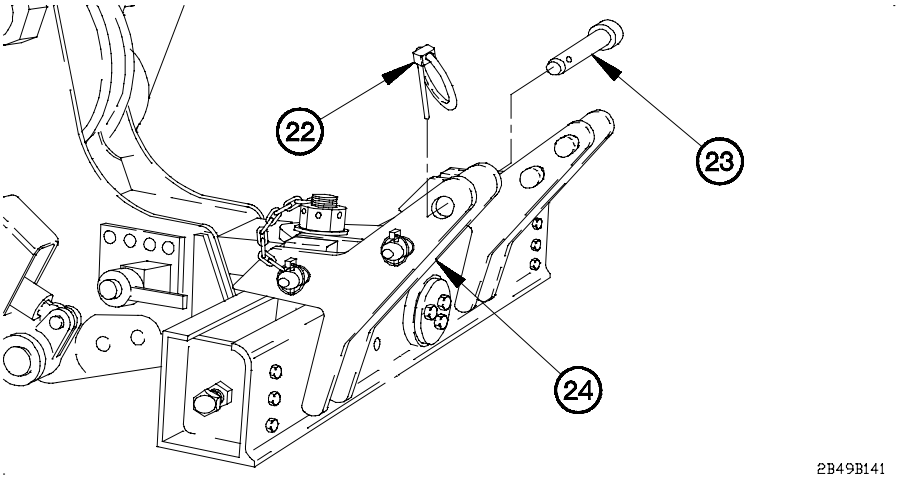

(28) Install two pins (23) and lynch pins (22) in lift tools (24).

2-49. M1078 AND M1083 SERIES TOWING CONNECTION/ DISCONNECTION (CONT)

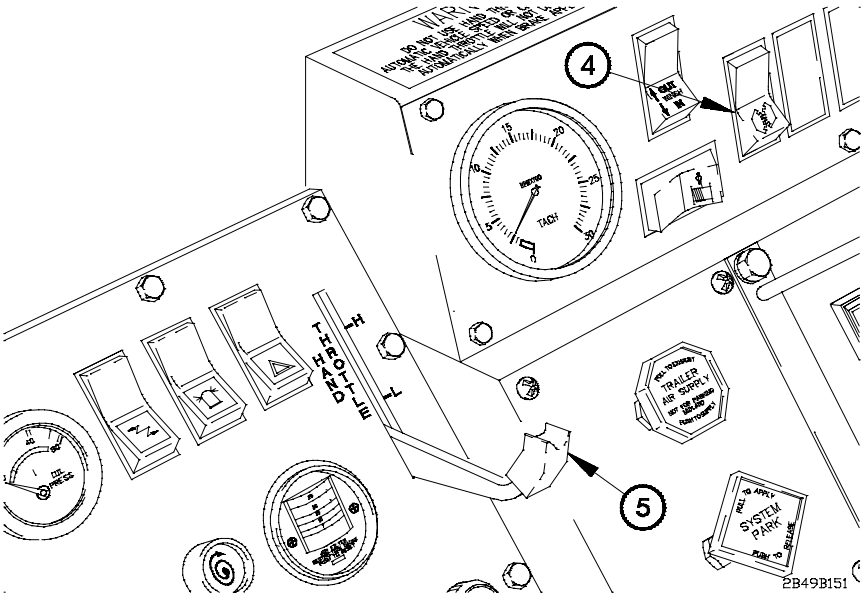

(29) Raise underlift assembly (para 2-44e).

(30) Disconnect WRECKER REMOTE CONTROL (para 2-44c).

(31) Set engine speed to idle (750 rpm) by decreasing HAND THROTTLE lever (5) to full down position.

(32) Position PTO switch (4) to off.

(33) Shut down engine (para 2-27f).

(34) Lower and remove two amber warning lights (para 2-74).

c. Rear Connection.

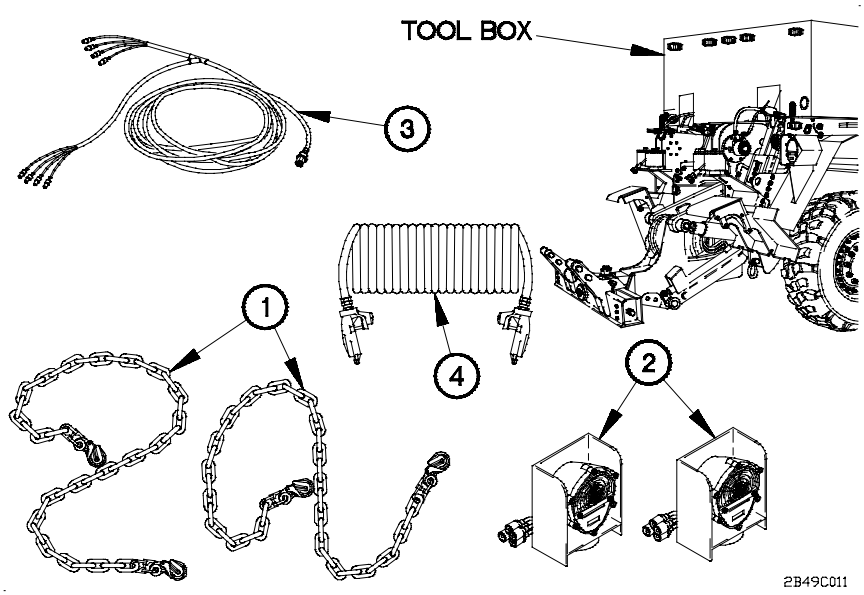

CAUTION

Front axle driveshaft must be removed on M1078 and M1083 series vehicles prior to performing a rear connection lift and tow. Failure to comply may result in damage to transmission of towed vehicle.

(1) Notify Unit Maintenance to remove driveshaft.

(1.1) Remove two chains (1), emergency tow lights (2), tow lights cable (3), and two intervehicular air hoses (4) from tool box.

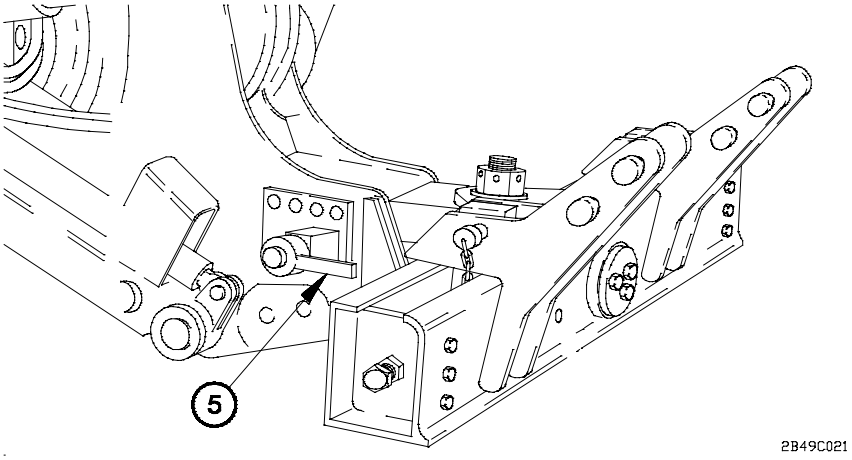

(2) Prepare underlift assembly for operation (para 2-44a).

NOTE

Perform step (3) if assistant is not available to aid in towing connection.

(3) Connect WRECKER REMOTE CONTROL (para 2-44b).

(4) Unlock stinger cam lock (5).

2-49. M1078 AND M1083 SERIES TOWING CONNECTION/ DISCONNECTION (CONT)

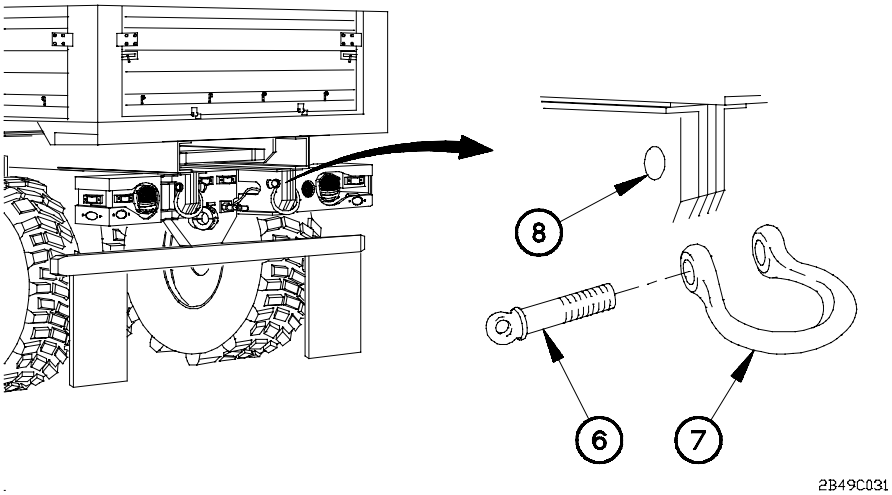

NOTE

Left and right side shackles are removed the same way. Right side shown.

(5) Remove two clevis pins (6) and shackles (7) from M1078/M1083 tow eyes (8).

(6) Stow two shackles (7) and clevis pins (6) in M1078/M1083.

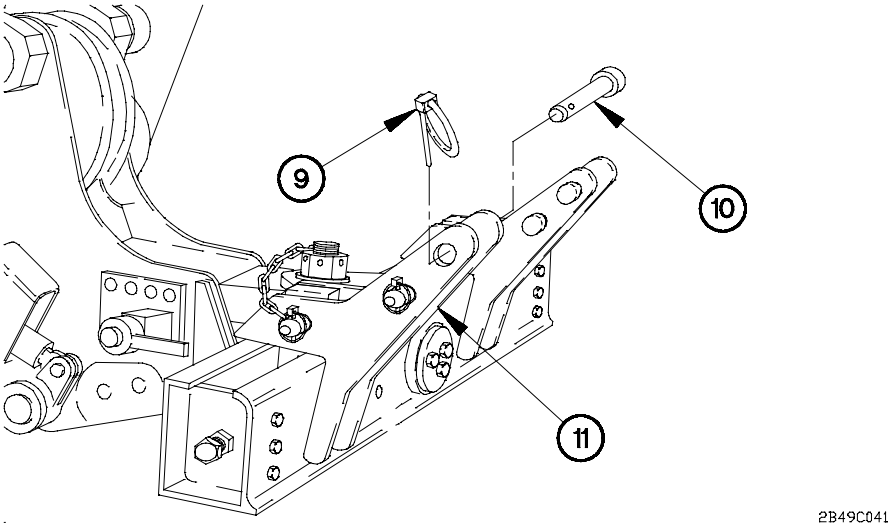

(7) Remove two lynch pins (9) and pins (10) from lift tools (11).

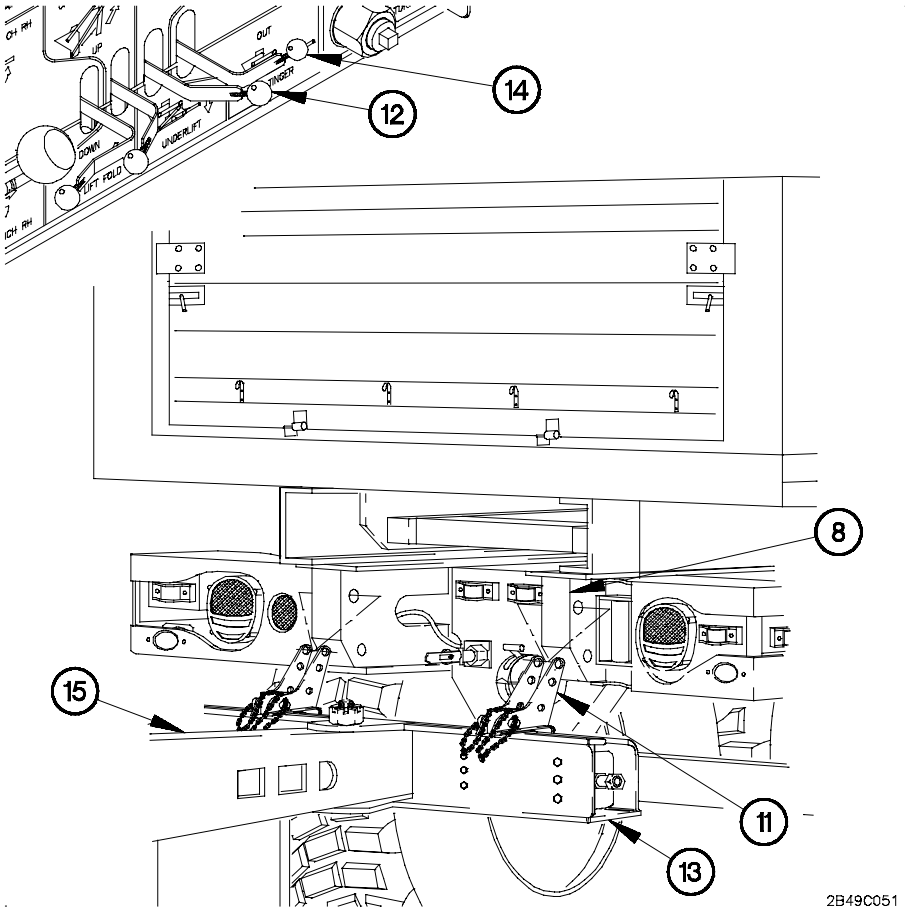

WARNING

Goggles must be worn while operating wrecker control panel. Blowing dust and debris may become airborne while engine is running. Failure to comply may result in injury to personnel.

(8) Place UNDERLIFT lever (12) in the UP position to raise crossbar (13) until lift tools (11) are aligned with M1078/M1083 tow eyes (8).

(9) Place STINGER lever (14) in OUT position to extend stinger (15) until lift tools (11) are aligned with M1078/M1083 tow eyes (8).

2-49. M1078 AND M1083 SERIES TOWING CONNECTION/ DISCONNECTION (CONT)

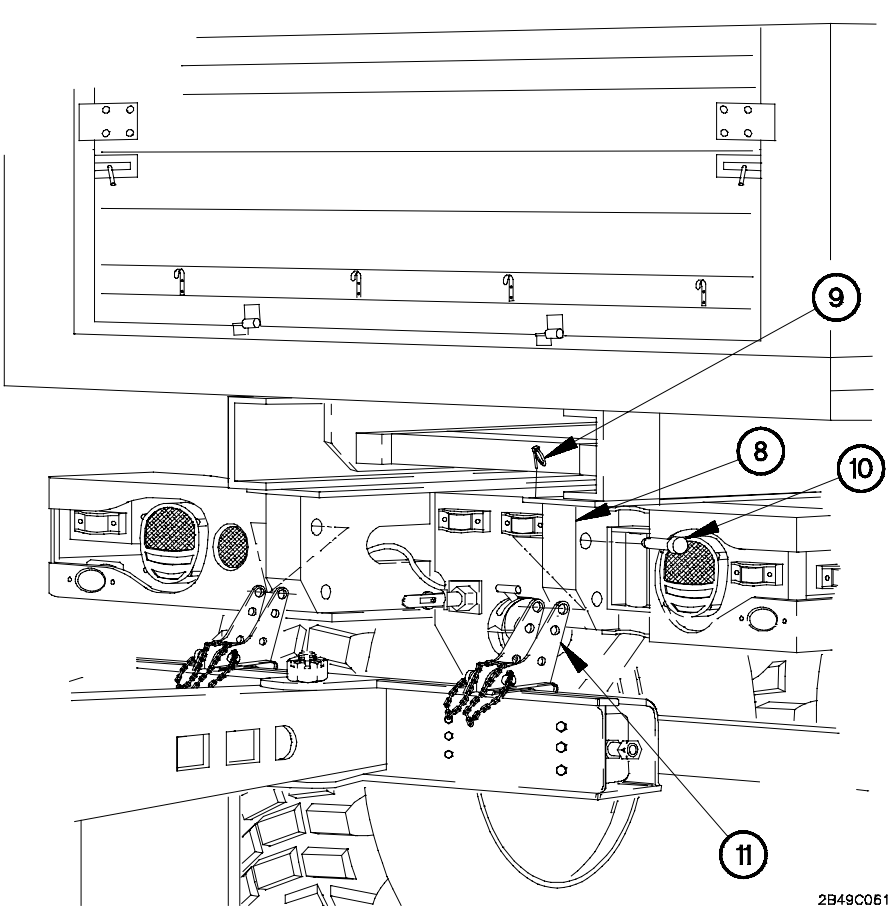

NOTE

Left and right side lift tools are installed on M1078/M1083 tow eyes the same way. Right side shown.

(10) Install two lift tools (11) on M1078/M1083 tow eyes (8) with pins (10) and lynch pins (9).

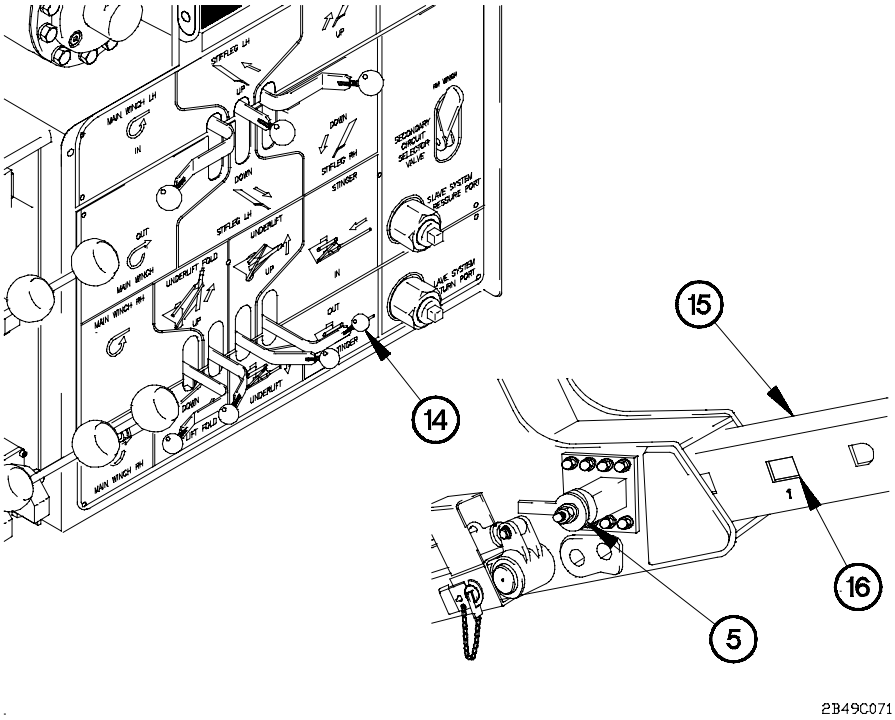

CAUTION

- Stinger cam lock is normally locked in second rectangular hole on stinger when towing M1078/M1083. It may be necessary to lock stinger cam lock in third rectangular hole on stinger if components mounted on rear of M1078/M1083 interfere with movement of crossbar. Lock stinger cam lock in hole which will allow crossbar to rotate freely. Failure to comply may result in damage to equipment.

- It may be necessary to start with holes 4 or 5 on stinger when recovering a vehicle on uneven ground. Once level ground is reached, lock stinger in second hole. Failure to comply may cause damage to equipment.

(11) Place STINGER lever (14) to IN position to retract stinger (15) until stinger cam lock holes (16) are aligned.

(12) Lock stinger cam lock (5).

2-49. M1078 AND M1083 SERIES TOWING CONNECTION/ DISCONNECTION (CONT)

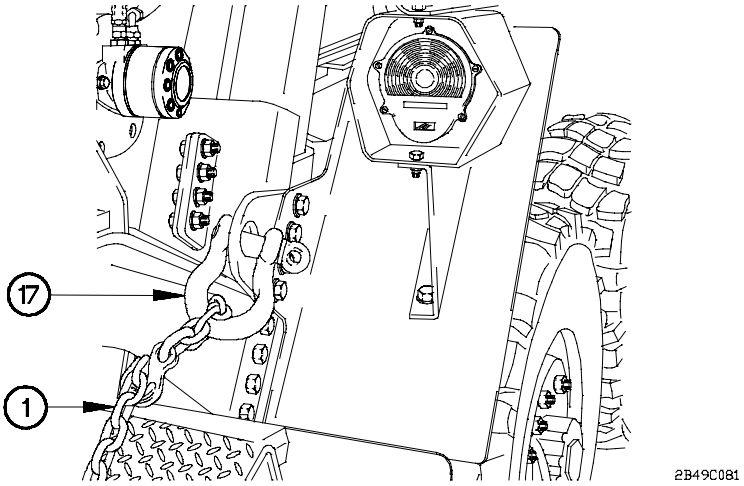

NOTE

Left and right side chains are installed the same way. Right side shown.

(13) Connect one end of two chains (1) to M1089 rear shackles (17).

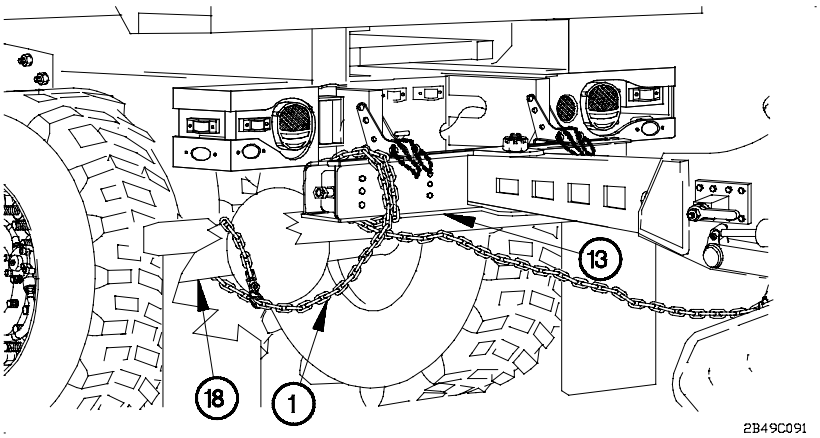

NOTE

Wrap chains around crossbar so that chains are approximately 6-10 in. (15-25 cm) above ground.

(14) Wrap two chains (1) around crossbar (13).

(15) Connect other end of chains (1) around M1078/M1083 rear axle (18).

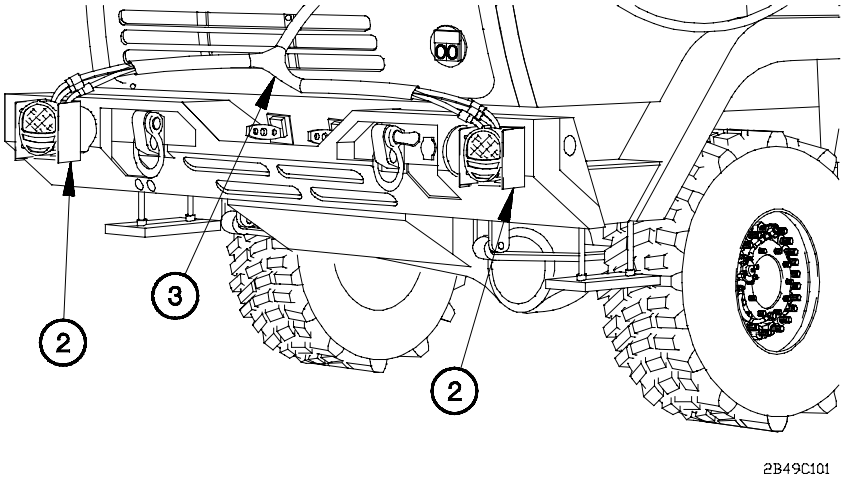

(16) Position two emergency tow lights (2) on front of M1078/M1083.

(17) Connect tow lights cable (3) to two emergency tow lights (2).

(18) Route tow lights cable (3) along top of M1078/M1083.

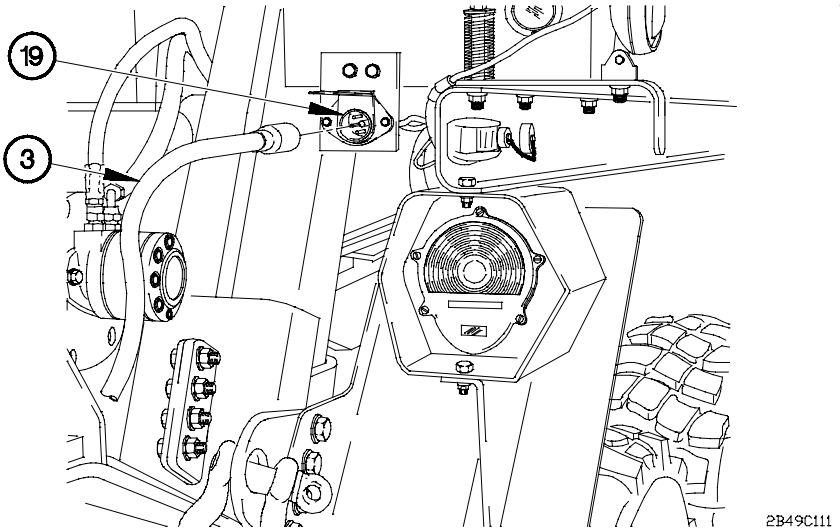

(19) Connect tow lights cable (3) to M1089 rear electrical connector (19).

2-49. M1078 AND M1083 SERIES TOWING CONNECTION/ DISCONNECTION (CONT)

(20) Deleted.

(21) Deleted.

(22) Deleted.

(23) Deleted.

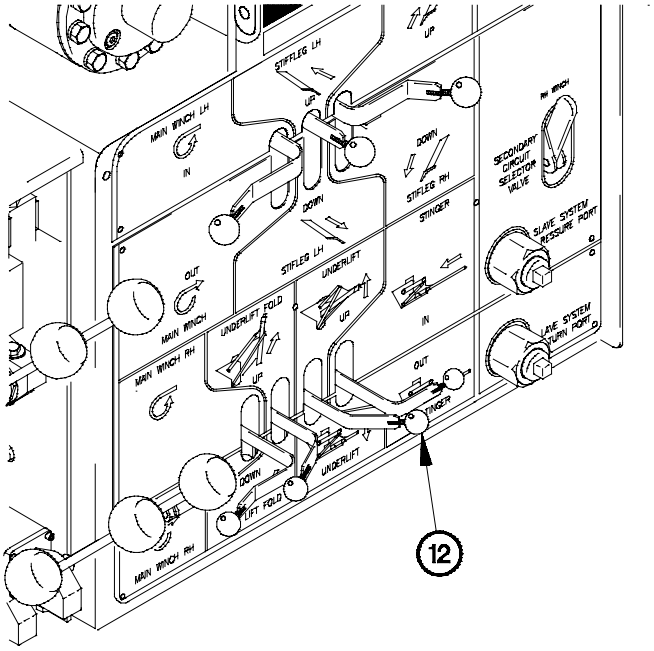

2B49C141

WARNING

Keep personnel clear of underlift assembly and disabled vehicle when raising. Disabled vehicle could fall suddenly. Failure to comply may result in serious injury or death to personnel.

CAUTION

All loose equipment must be secure on M1078/M1083. Failure to comply may result in damage to equipment.

(24) Prepare M1078/M1083 for towing (para 2-62b).

(25) Place UNDERLIFT lever (12) in UP position to raise M1078/M1083 until wheels are approximately 16 in. (41 cm) off ground.

(26) Disconnect WRECKER REMOTE CONTROL (para 2-44c).

2-49. M1078 AND M1083 SERIES TOWING CONNECTION/ DISCONNECTION (CONT)

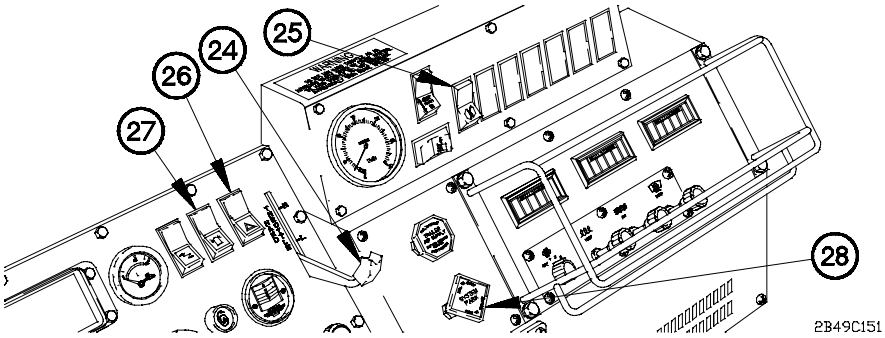

(27) Set engine speed to idle (750 rpm) by decreasing HAND THROTTLE lever (24) to full down position.

(28) Position PTO switch (25) to off.

(29) Install and raise two amber warning lights (para 2-74).

(30) Turn on service drive lights (para 2-27c).

(31) Position hazard lights switch (26) to on.

(32) Position amber warning lights switch (27) to on.

(33) Push in SYSTEM PARK control (28).

(34) Set transmission in gear (para 2-27e).

WARNING

M1089 should not be operated at speeds over 15 mph (24 km/h) when towing, except on paved roads when Operator determines that terrain conditions allow safe operation. The following are maximum speeds for safe operation:

TERRAIN CONDITION	MAXIMUM SPEED
on road (level)	35 mph (56 km/h)
on road (hilly)	30 mph (48 km/h)
off road	15 mph (24 km/h)

Failure to comply may result in serious injury or death to personnel or damage to equipment.

(35) Transport M1078/M1083.

d. Rear Disconnection.

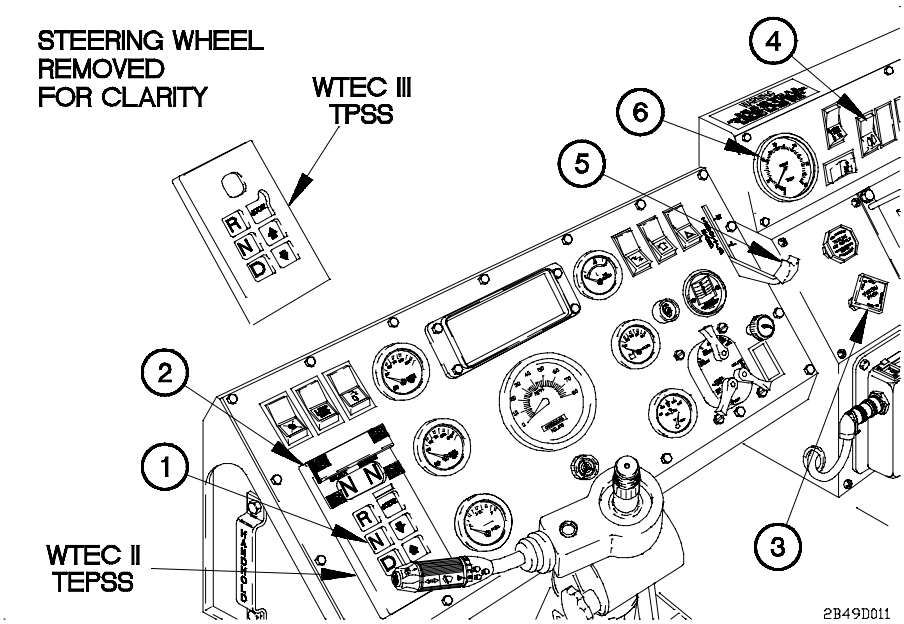

(1) Start engine (para 2-27a or b).

(2) Press N (Neutral) button (1) on WTEC II TEPSS (2) or WTEC III TPSS (2).

(3) Pull out SYSTEM PARK control (3).

CAUTION

- Keep tachometer within 1,250-1,450 rpm when Power Take-Off (PTO) is engaged. Failure to comply may result in damage to equipment.
- In the event of a tachometer failure a HAND THROTTLE lever positioned to L is approximately 1,250-1,450 rpm.

(4) Position PTO switch (4) to on.

(5) Set engine speed by increasing HAND THROTTLE lever (5) until tachometer (6) reads 1,250-1,450 rpm.

2-49. M1078 AND M1083 SERIES TOWING CONNECTION/ DISCONNECTION (CONT)

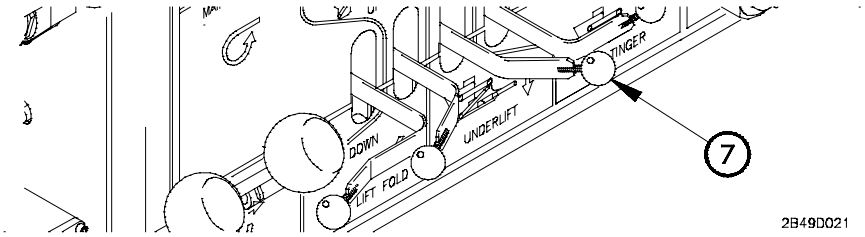

WARNING

- **Keep personnel clear of underlift assembly and disabled vehicle when raising. Disabled vehicle could fall suddenly. Failure to comply may result in serious injury or death to personnel.**
- **Goggles must be worn while operating wrecker control panel. Blowing dust and debris may become airborne while engine is running. Failure to comply may result in injury to personnel.**

NOTE

Perform step (6) if assistant is not available to aid in towing connection.

(6) Connect WRECKER REMOTE CONTROL (para 2-44b).

(7) Place UNDERLIFT lever (7) in DOWN position to lower M1078/M1083 until wheels are in firm contact with ground.

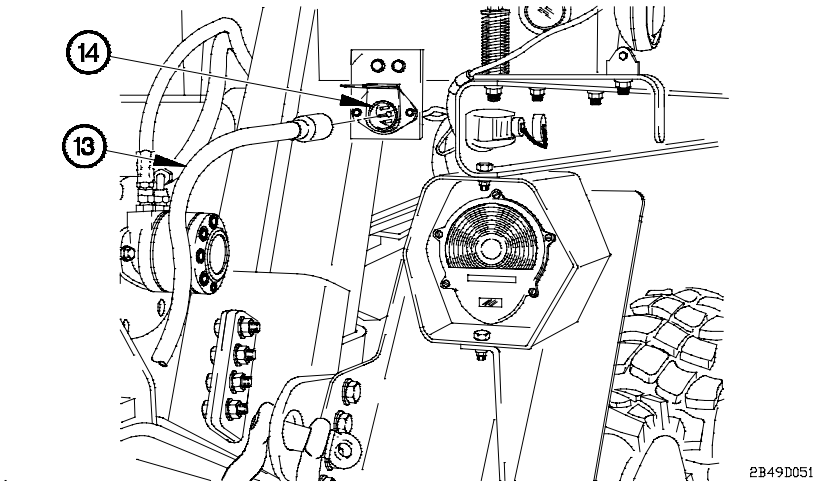

(8) Disconnect tow lights cable (13) from M1089 rear electrical connector (8).

(9) Deleted.

(10) Deleted.

(11) Deleted.

(12) Deleted.

(13) Deleted.

2-49. M1078 AND M1083 SERIES TOWING CONNECTION/ DISCONNECTION (CONT)

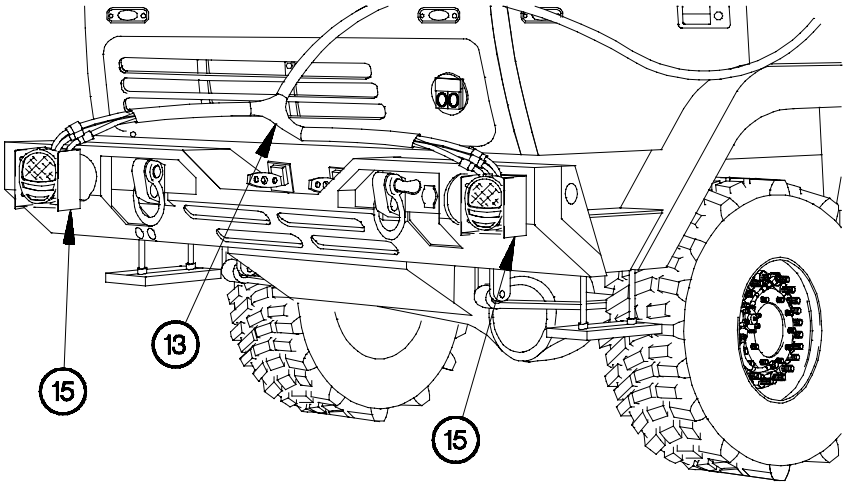

(14) Disconnect tow lights cable (13) from two emergency tow lights (15).

(15) Remove two emergency tow lights (15) from front of M1078/M1083.

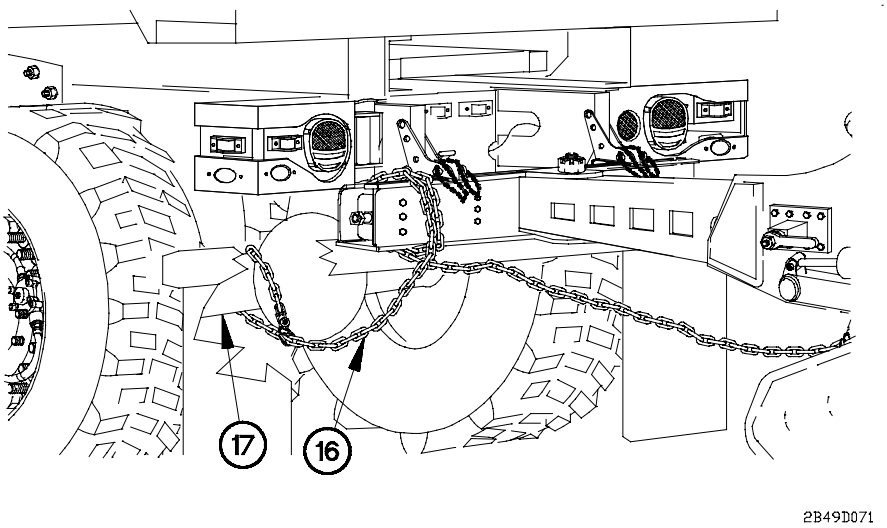

NOTE

Left and right side chains are removed the same way. Right side shown.

(16) Remove two chains (16) from M1078/M1083 rear axle (17).

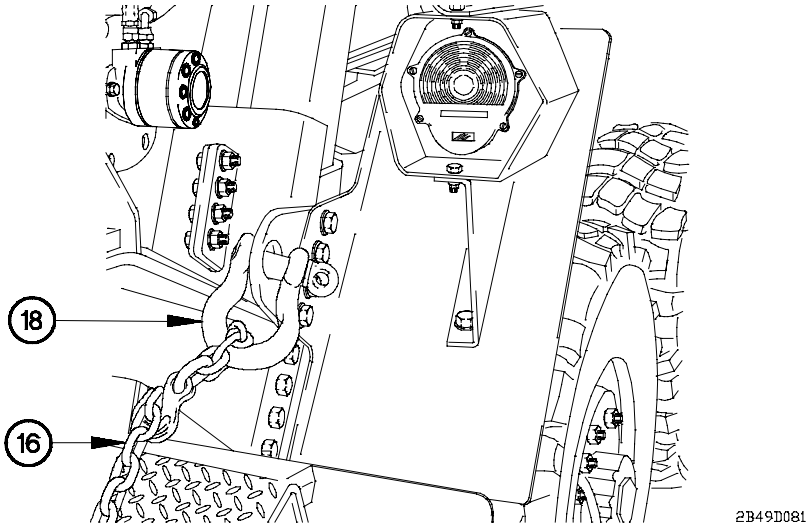

(17) Remove other end of two chains (16) from M1089 rear shackles (18).

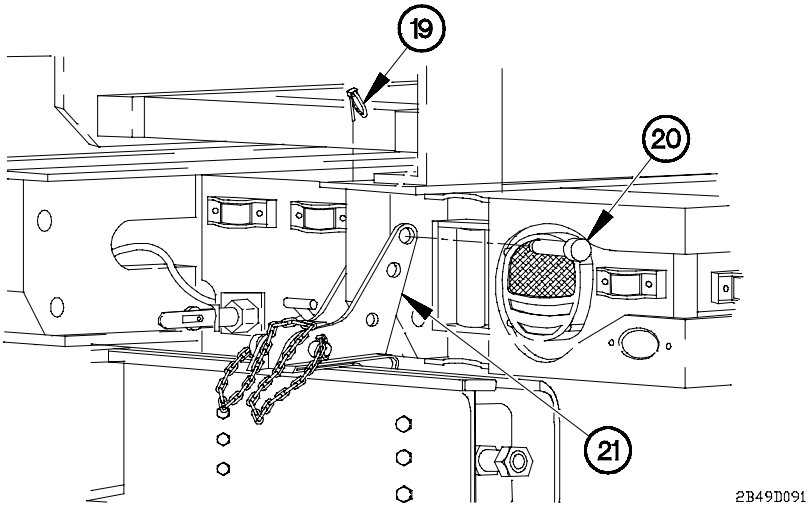

NOTE

Left and right side lift tools are removed the same way. Right side shown.

(18) Remove two lynch pins (19) and pins (20) from two lift tools (21).

2-49. M1078 AND M1083 SERIES TOWING CONNECTION/ DISCONNECTION (CONT)

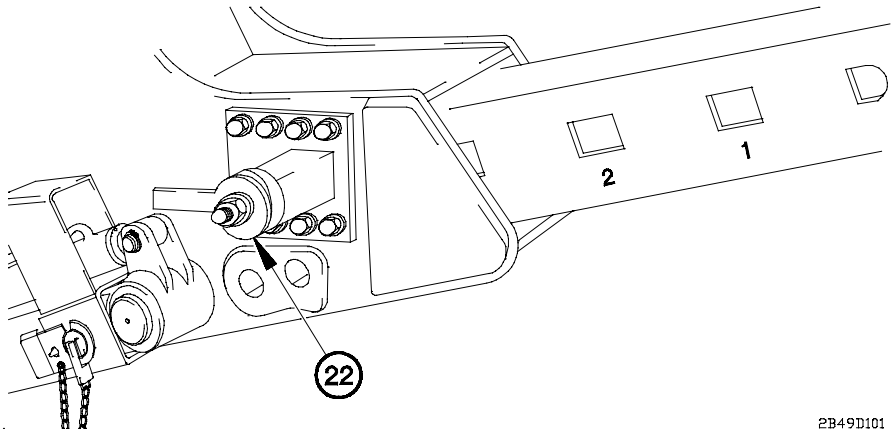

(19) Unlock stinger cam lock (22).

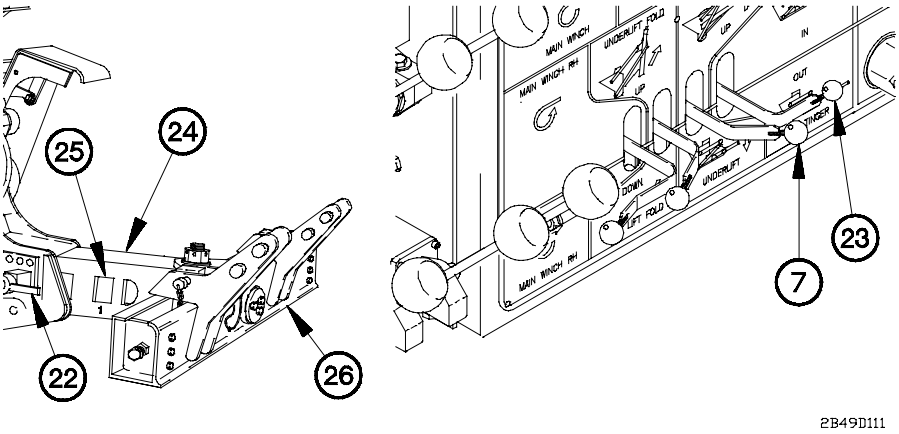

WARNING

Stinger cam lock must be locked in first rectangular hole on stinger before underlift assembly is folded into its stowed position. Crossbar could shift suddenly. Failure to comply may result in injury to personnel.

(20) Place STINGER lever (23) to IN position to retract stinger (24) until stinger cam lock (22) is aligned with first hole (25) in stinger.

(21) Place UNDERLIFT lever (7) in DOWN position until crossbar (26) is fully down.

(22) Lock stinger cam lock (22).

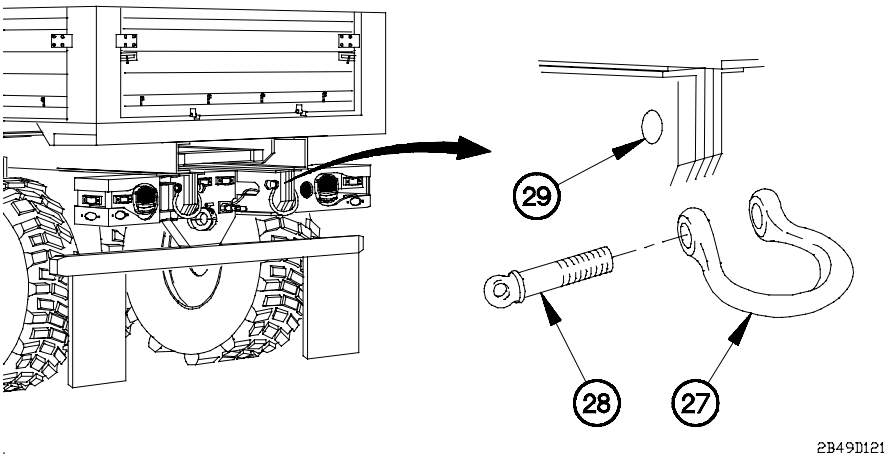

(23) Remove two shackles (27) and clevis pins (28) from M1078/M1083 cab stowage box.

NOTE

Left and right side shackles are installed the same way. Right side shown.

(24) Install two shackles (27) on M1087/M1083 tow eyes (29) with two clevis pins (28).

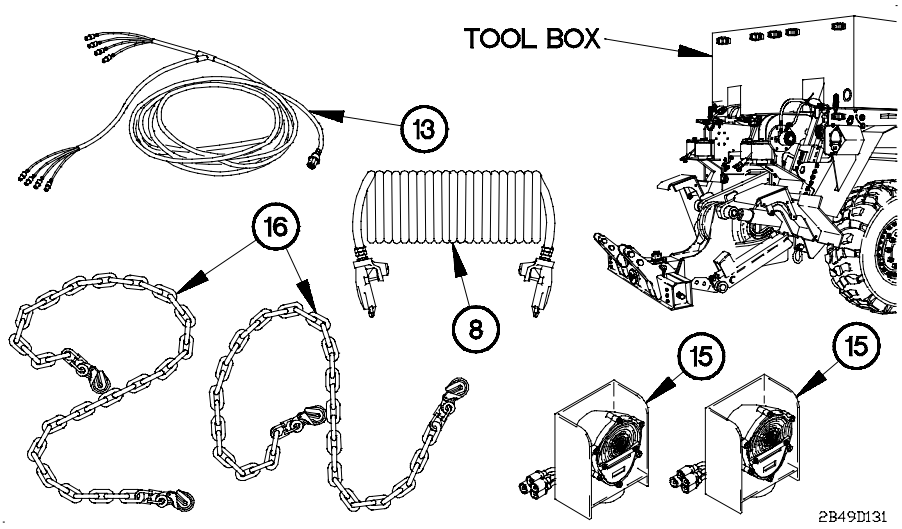

(25) Stow two intervehicular air hoses (8), tow lights cable (13), two emergency tow lights (15), and chains (16) in tool box.

2-49. M1078 AND M1083 SERIES TOWING CONNECTION/ DISCONNECTION (CONT)

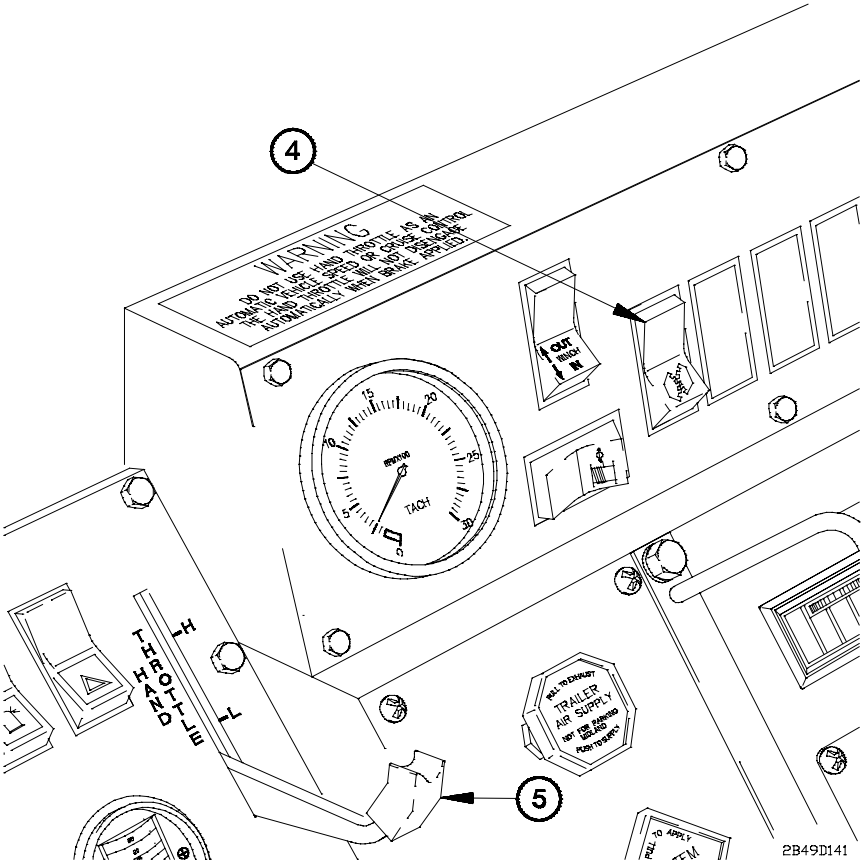

(26) Raise underlift assembly (para 2-44e).

(27) Disconnect WRECKER REMOTE CONTROL (para 2-44c).

(28) Set engine speed to idle (750 rpm) by decreasing HAND THROTTLE lever (5) to full down position.

(29) Position PTO switch (4) to off.

(30) Shut down engine (para 2-27f).

(31) Lower and remove two amber warning lights (para 2-74).

2-50. WRECKER MATERIAL HANDLING CRANE (MHC) OPERATION

a. Determine required MHC settings from range diagram.

(1) Use Figure 2-33. Area Definition Chart to determine position of MHC.

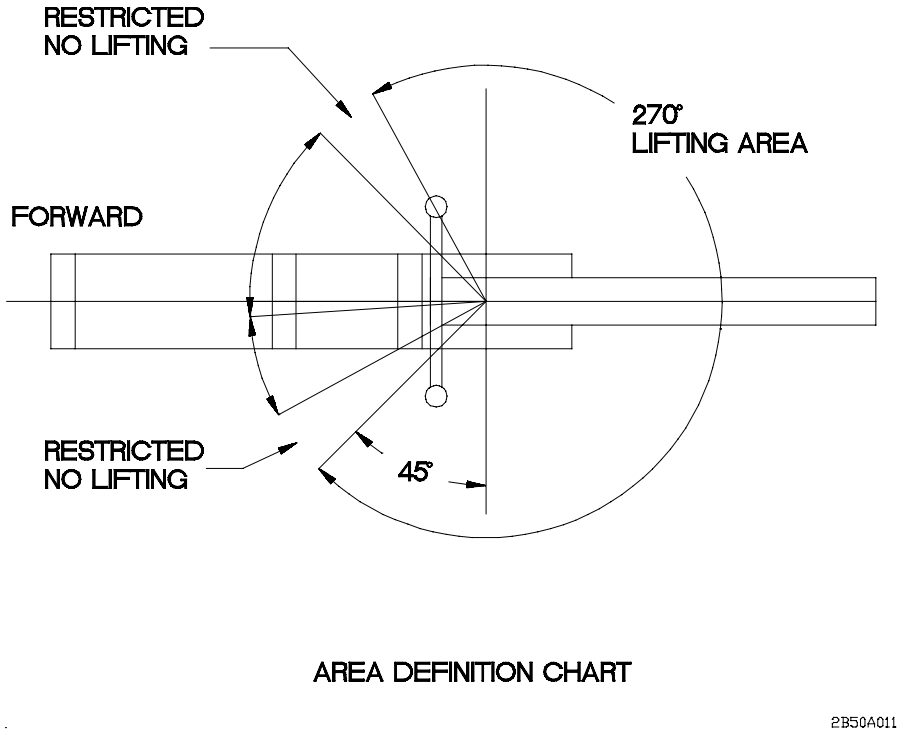

Figure 2-33. Area Definition Chart

2-50. WRECKER MATERIAL HANDLING CRANE (MHC) OPERATION (CONT)

(2) Use Table 2-21. Load Chart for load capacities.

Table 2-21. Load Chart

LOAD CHART

	ON OUTRIGGERS					ON RUBBER
	SIDE & REAR - 270°					BOOM CENTERED OVER REAR
RADIUS	BOOM LENGTH					
	7.33 (2.23)	14.25 (4.34)	15.00 (4.57)	16.50 (5.03)	18.42 (5.81)	
4.00 (1.22)	11,000 (4,988)					
7.00 (2.13)	11,000 (4,988)					
8.00 (2.44)		11,000 (4,988)	11,000 (4,988)			
9.00 (2.74)		11,000 (4,988)	11,000 (4,988)	10,000 (4,535)		
11.00 (3.35)		11,000 (4,988)	11,000 (4,988)	10,000 (4,535)	9,000 (4,082)	
12.50 (3.81)		10,000 (4,535)	10,000 (4,535)	10,000 (4,535)	9,000 (4,082)	
14.00 (4.27)		10,000 (4,535)	10,000 (4,535)	9,000 (4,082)	8,000 (3,628)	
14.50 (4.42)			9,500 (4,309)	8,500 (3,855)	8,000 (3,628)	
16.00 (4.88)				8,000 (3,628)	7,500 (3,401)	
17.50 (5.33)					7,000 (3,175)	
18.00 (5.49)					6,500 (2,948)	5,000 (2,268)

CAPACITIES IN POUNDS (KILOGRAMS)

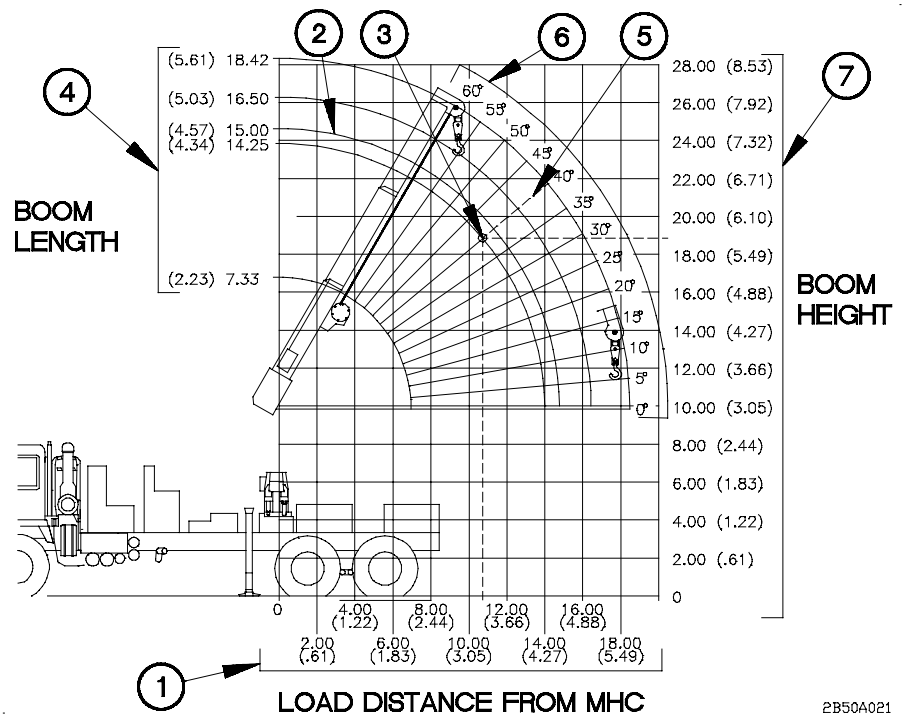

(3) Determine distance load is from MHC and locate dimension along bottom horizontal line (1). (Example: Load is 11 ft (3 m) from MHC.)

(4) Follow line vertically up graph until it intersects with boom length arc (2). Mark intersection point (3).

(5) Follow line along arc and make note of boom length (4). (Example: If load is 11 ft (3 m) from MHC, boom length is 14.25 ft (4 m).)

(6) Return to intersection point (3). Follow diagonal line (5) to determine boom angle setting (6). (Example: Boom angle setting is 40 degrees from intersection point.)

(7) Return to intersection point (3). Follow horizontal line to determine boom height (7). (Example: Boom height is 19 ft (5 m) from intersection point.)

(8) Locate distance load is from MHC in Table 2-22. Wrecker Material Handling Crane (MHC) Range Diagram Summary.

(9) Follow across table to verify height of boom and to determine maximum load. (Example: Boom height is 19 ft (5 m) and maximum MHC load is 11,000 lbs (4,994 kgs).)

2-50. WRECKER MATERIAL HANDLING CRANE (MHC) OPERATION (CONT)

Table 2-22. Wrecker Material Handling Crane (MHC) Range Diagram Summary

DISTANCE LOAD IS FROM MHC	BOOM ANGLE	HEIGHT OF BOOM	MAXIMUM LOAD
18 ft (5.5 m)	5 degrees	11.5 ft (3.5 m)	6,500 lbs (2,951 kgs)[1]
17.5 ft (5.3 m)	15 degrees	15 ft (4.6 m)	7,000 lbs (3,178 kgs)
16 ft (4.9 m)	27 degrees 10 degrees	19 ft (5.8 m) 13 ft (4.0 m)	7,500 lbs (3,405 kgs) 8,000 lbs (3,632 kgs)
14.5 ft (4.4 m)	38 degrees 27 degrees 15 degrees	21.5 ft (6.6 m) 18 ft (5.5 m) 14 ft (4.3 m)	8,000 lbs (3,632 kgs) 8,500 lbs (3,859 kgs) 9,500 lbs (4,313 kgs)
14 ft (4.3 m)	39 degrees 30 degrees 17 degrees 5 degrees	22 ft (6.7 m) 18.5 ft (5.6 m) 15 ft (4.6 m) 11 ft (3.4 m)	8,000 lbs (3,632 kgs) 9,000 lbs (4,086 kgs) 10,000 lbs (4,540 kgs) 10,000 lbs (4,540 kgs)
12.5 ft (3.8 m)	47 degrees 42 degrees 34 degrees 28 degrees	23.5 ft (7.2 m) 21 ft (6.4 m) 18.5 ft (5.6 m) 16.5 ft (5.0 m)	9,000 lbs (4,086 kgs) 10,000 lbs (4,540 kgs) 10,000 lbs (4,540 kgs) 10,000 lbs (4,540 kgs)
11 ft (3.4 m)	53 degrees 47 degrees 43 degrees 40 degrees	25 ft (7.6 m) 22.5 ft (6.9 m) 20 ft (6.1 m) 19 ft (5.8 m)	9,000 lbs (4,086 kgs) 10,000 lbs (4,540 kgs) 11,000 lbs (4,994 kgs) 11,000 lbs (4,994 kgs)
9 ft (2.7 m)	57 degrees 53 degrees 50 degrees	24 ft (7.3 m) 22 ft (6.7 m) 21 ft (6.4 m)	10,000 lbs (4,540 kgs) 11,000 lbs (4,994 kgs) 11,000 lbs (4,994 kgs)
8 ft (2.4 m)	57 degrees 55 degrees	22.5 ft (6.9 m) 21.5 ft (6.6 m)	11,000 lbs (4,994 kgs) 11,000 lbs (4,994 kgs)
7 ft (2.1 m)	20 degrees	13 ft (4.0 m)	11,000 lbs (4,994 kgs)
4 ft (1.2 m)	55 degrees	16 ft (4.9 m)	11,000 lbs (4,994 kgs)

[1] Maximum load is only 5,000 lbs (2,270 kgs) when boom is centered over rear of vehicle.

b. Prepare MHC for Use.

WARNING

- **Do not operate Material Handling Crane (MHC) unless outriggers are set up and MHC is level from side to side. Failure to comply may result in serious injury or death to personnel.**
- **Set up stifflegs if load is swung around rear of vehicle. Vehicle could turn over if not supported. Failure to comply may result in serious injury or death to personnel.**
- **Operator must keep load in sight at all times while operating Material Handling Crane (MHC). Load may unexpectedly shift. Failure to comply may result in serious injury or death to personnel.**
- **Do not operate Material Handling Crane (MHC) and 15K Self-Recovery Winch (SRW) at the same time. Failure to comply may result in serious injury or death to personnel.**

CAUTION

Hydraulic oil level must be at FULL line and hydraulic shutoff and return valves must be opened before Material Handling Crane (MHC) is operated. Failure to comply may result in damage to equipment.

NOTE

MHC will not operate if hydraulic or electrical systems fail. Refer to para 2-50a and Table 2-22 to verify that MHC settings are correct for load being lifted. Refer to para 2-67c if hydraulic or electrical systems fail.

NOTE

MHC can operate on side slope up to 5 degrees.

(1) Start engine (para 2-27a or b).

(2) Position vehicle on level ground so all loading and unloading can be performed from one position.

2-50. WRECKER MATERIAL HANDLING CRANE (MHC) OPERATION (CONT)

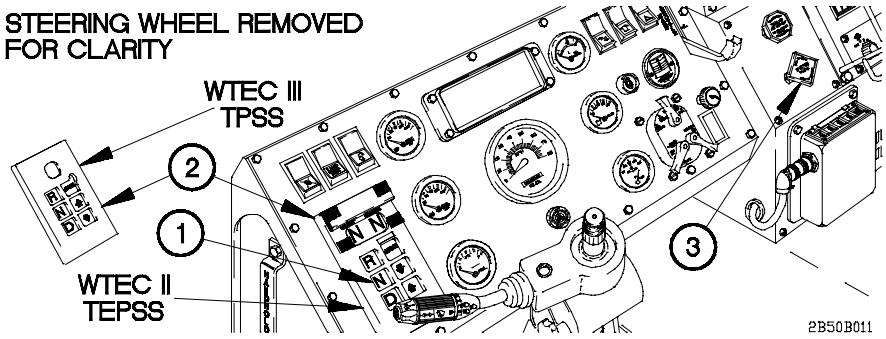

(3) Chock wheels (para 2-27h).

(4) Press N (Neutral) button (1) on WTEC II TEPSS (2) or WTEC III TPSS (2).

(5) Pull out SYSTEM PARK control (3).

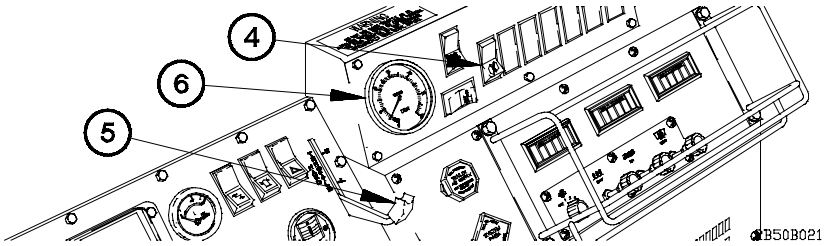

(6) Position PTO switch (4) to on.

CAUTION

Keep tachometer within 1,250-1,450 rpm when Power Take-Off (PTO) is engaged. Operating engine greater than 1,450 rpm when PTO is engaged may result in damage to engine.

NOTE

In the event of a tachometer failure a HAND THROTTLE lever positioned to L is approximately 1,250-1,450 rpm.

(7) Set engine speed by increasing HAND THROTTLE lever (5) until tachometer (6) reads 1,250-1,450 rpm.

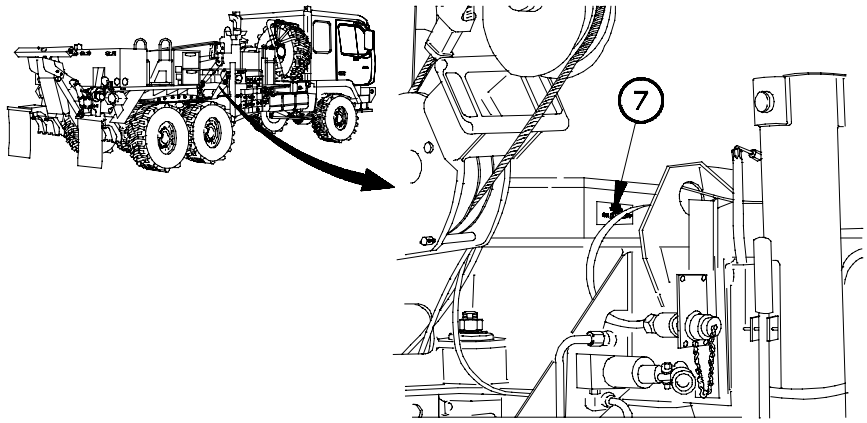

(8) Position MAIN POWER switch (7) to ON.

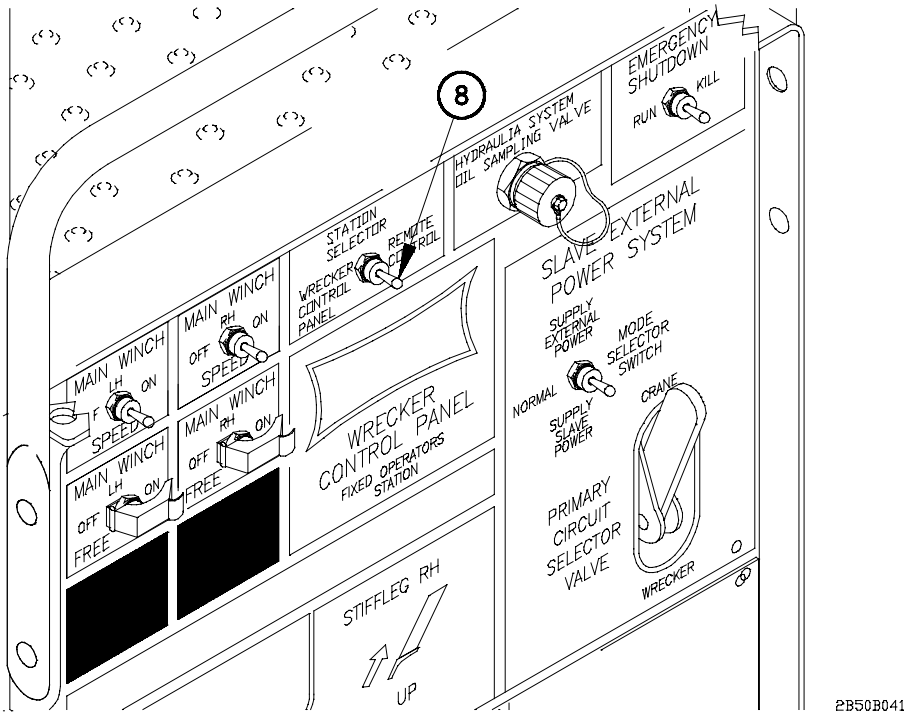

(9) Position STATION SELECTOR switch (8) to WRECKER CONTROL PANEL.

2-50. WRECKER MATERIAL HANDLING CRANE (MHC) OPERATION (CONT)

c. Set Up Outriggers.

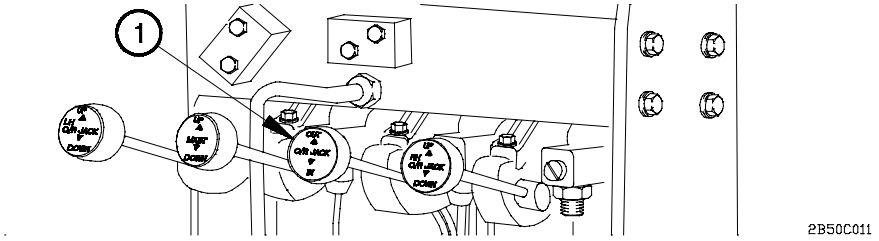

WARNING

Area must be clear on both sides of vehicle before extending outriggers. Failure to comply may result in serious injury to personnel.

(1) Move O/R JACK lever (1) to OUT position until outriggers are fully extended.

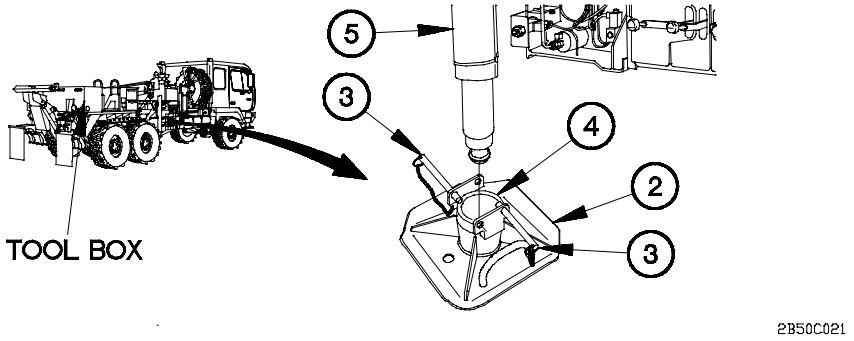

NOTE

Both outrigger pads are installed on outriggers the same way. Right outrigger pad shown.

(2) Remove two outrigger pads (2) from tool box.

(3) Remove two pins (3) from outrigger pad (2).

(4) Clean all dirt and debris from socket (4) in outrigger pad (2) and from end of outrigger (5).

(5) Install outrigger pad (2) on end of outrigger (5) with pin (3).

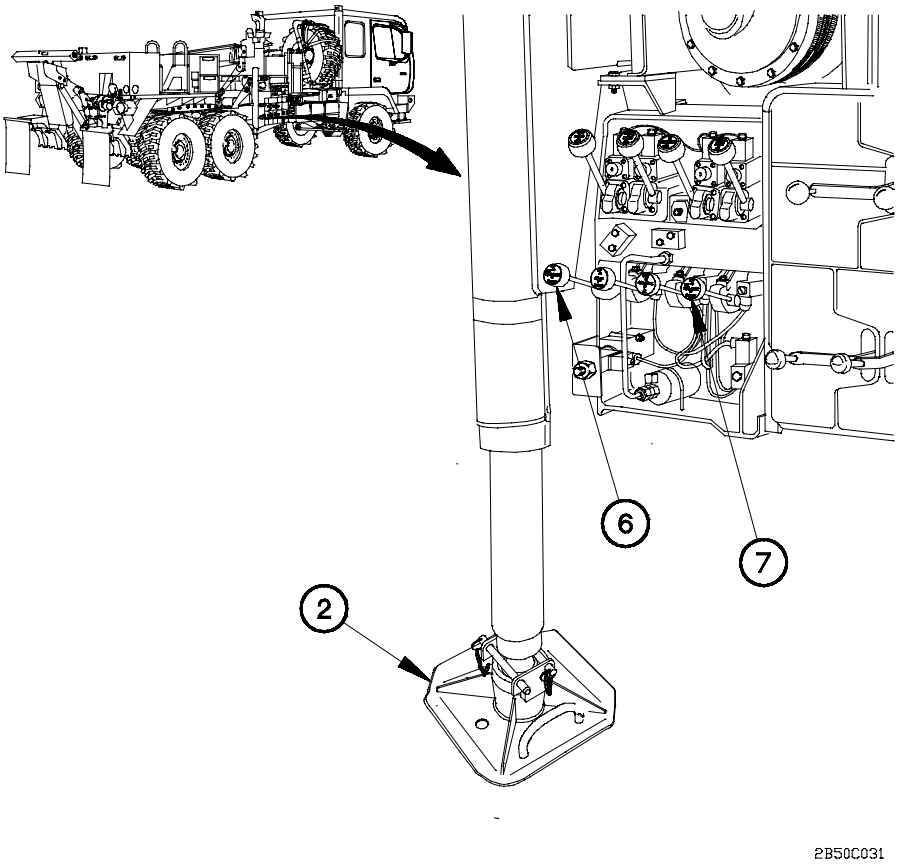

WARNING

- **Keep hands and feet clear of outriggers during operation. Failure to comply may result in injury to personnel.**
- **Goggles must be worn while operating Material Handling Crane (MHC) controls. Blowing dust and debris may become airborne while engine is running. Failure to comply may result in injury to personnel.**

(6) Move LH O/R (Outrigger) JACK lever (6) to DOWN position until outrigger pad (2) is on the ground.

(7) Move RH O/R (Outrigger) JACK lever (7) to DOWN position until outrigger pad (2) is on the ground.

2-50. WRECKER MATERIAL HANDLING CRANE (MHC) OPERATION (CONT)

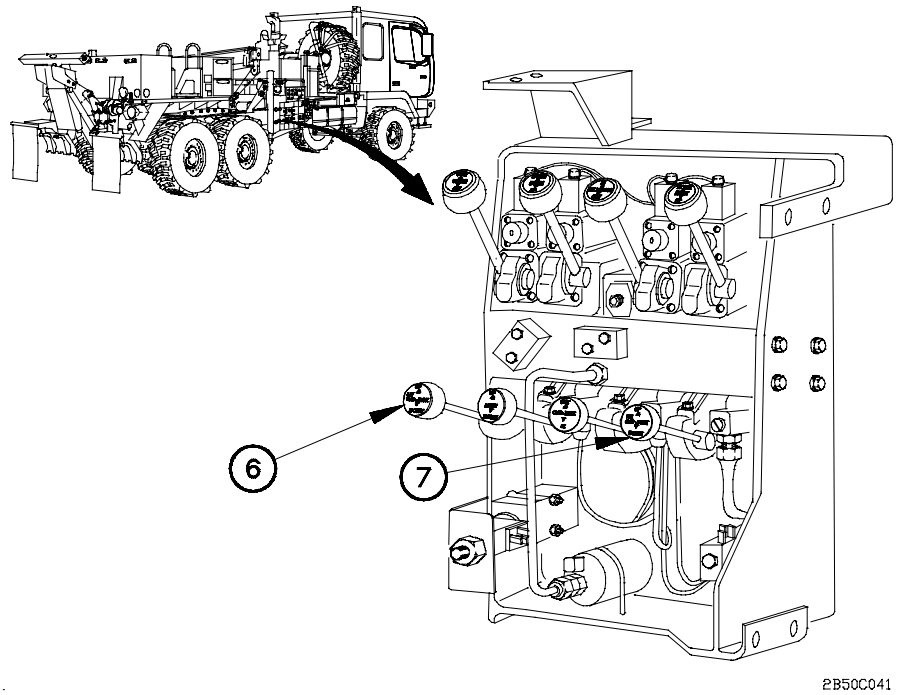

WARNING

- **Do not raise vehicle tires off ground with outriggers. Vehicle may roll over. Failure to comply may result in serious injury or death to personnel.**
- **Outriggers must be positioned so that Material Handling Crane (MHC) is level from side to side. Use of MHC when vehicle is not level can cause vehicle to roll over. Failure to comply may result in serious injury or death to personnel.**

NOTE

Outriggers should be lowered just enough so tires still have firm contact with ground but do not bulge from weight. Left outrigger or right outrigger may need to be lowered slightly more than the other to level MHC from side to side.

(8) Move LH O/R JACK lever (6) and RH O/R JACK lever (7) to DOWN position until most of vehicle weight is off rear tires.

d. Raise Boom to Operating Position.

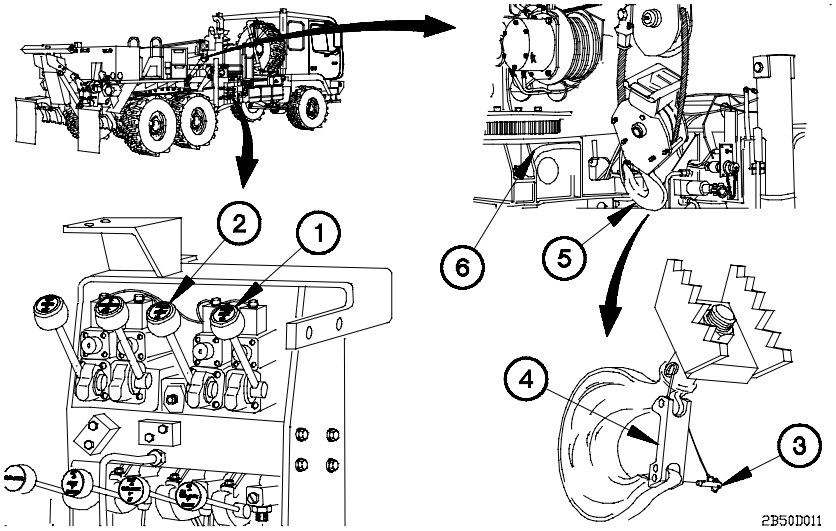

WARNING

Do not disconnect cable from stowage ring until boom is raised to a 30-degree angle. Hook assembly could fall. Failure to comply may result in injury to personnel.

CAUTION

Do not allow excessive slack to build-up when paying out cable. Cable may get tangled on drum. Failure to comply may result in damage to equipment.

NOTE

Operate HOIST lever and BOOM lever at the same time.

(1) Move HOIST lever (1) to DOWN position and BOOM lever (2) to UP position until boom is at a 30-degree angle.

(2) Remove safety pin (3) from hook assembly latch (4).

(3) Disconnect hook assembly (5) from stowage ring (6).

2-50. WRECKER MATERIAL HANDLING CRANE (MHC) OPERATION (CONT)

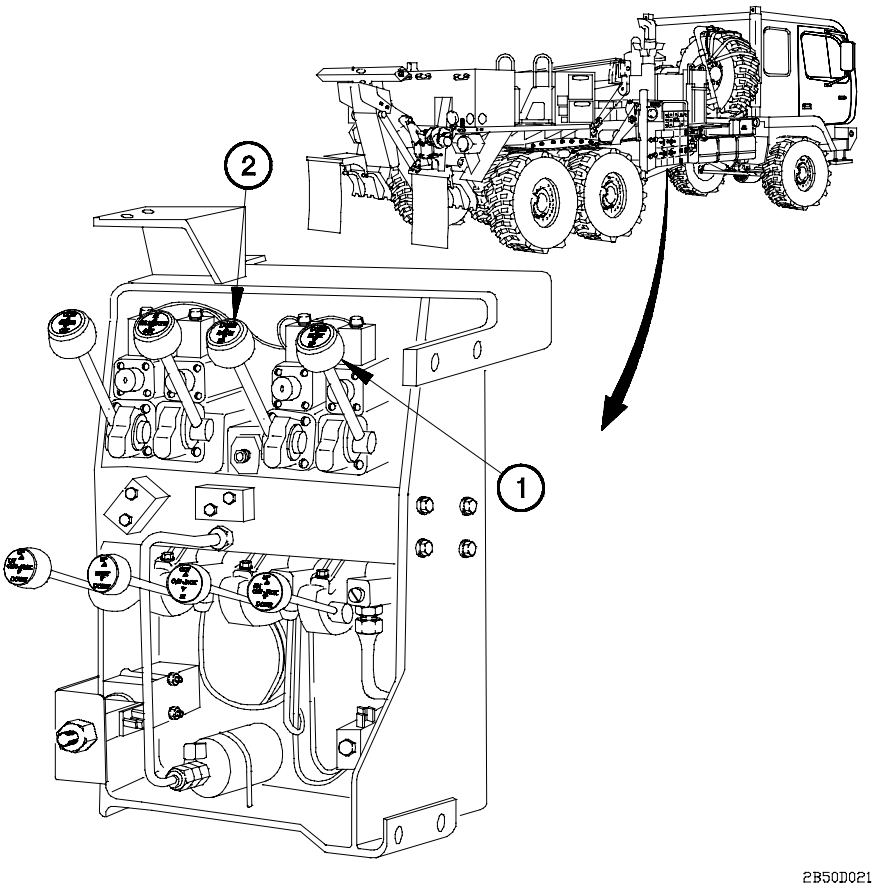

WARNING

Keep boom clear of all electrical lines and other obstacles while operating Material Handling Crane (MHC). Failure to comply may result in serious injury or death to personnel.

NOTE

Operate HOIST lever and BOOM lever at the same time.

(4) Move HOIST lever (1) to DOWN position and BOOM lever (2) to UP position until boom angle is approximately 45 degrees.

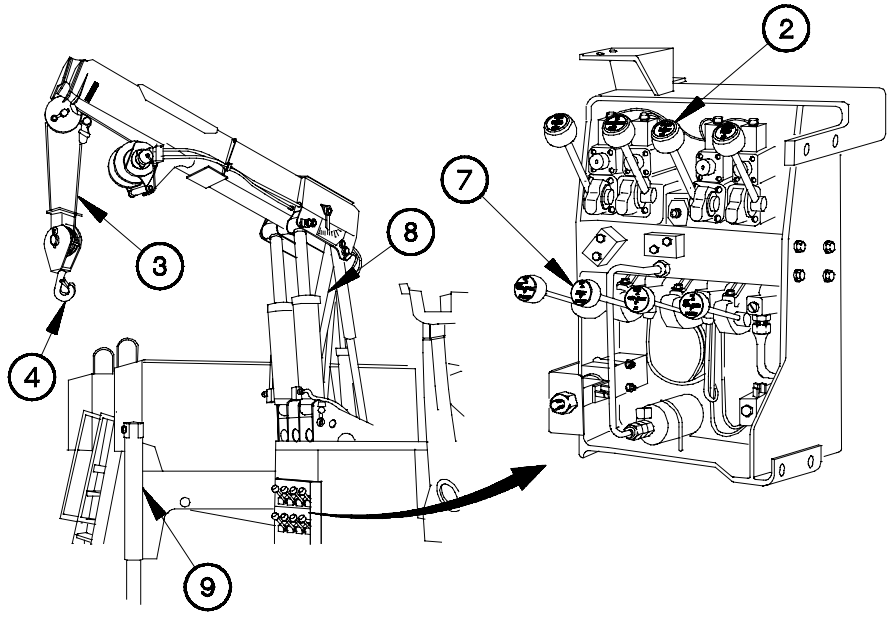

2B50D031

CAUTION

- Never telescope boom or lift load unless mast is fully raised. Failure to comply may result in damage to equipment.
- Keep hook assembly from contacting outrigger while raising mast. Failure to comply may result in damage to equipment.

NOTE

Operate BOOM lever and MAST lever at the same time to maintain boom at approximately a 45-degree angle.

(5) Move BOOM lever (2) to UP position and MAST lever (7) to UP position until mast (8) is fully raised.

(6) Reel in cable (3) so hook assembly (4) clears outriggers (9) as mast (8) is being raised.

2-50. WRECKER MATERIAL HANDLING CRANE (MHC) OPERATION (CONT)

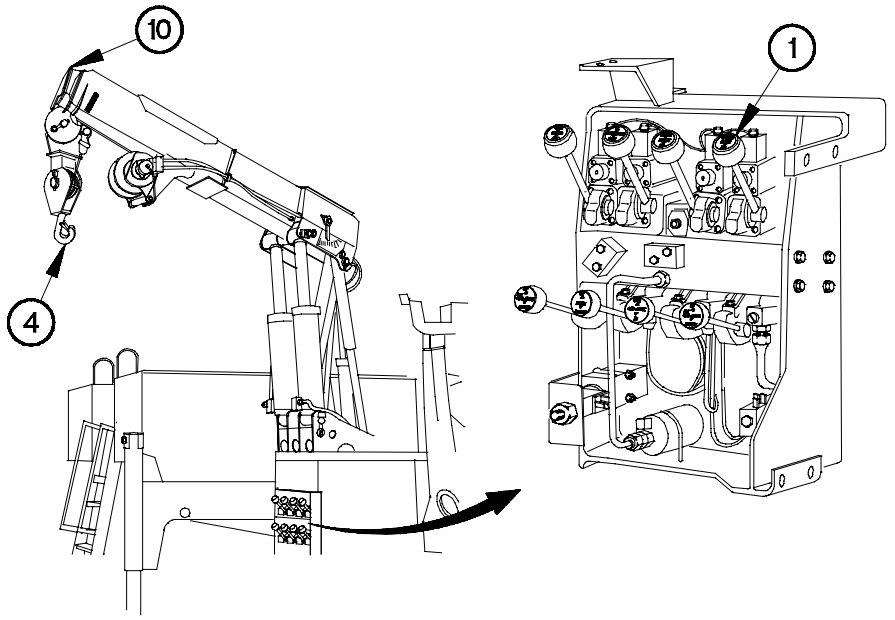

(7) To pre-operational check MHC Overload Shutdown System (OSS) perform the following:

(a) Place HOIST lever (1) in UP position until hook assembly (4) is against boom nose (10).

NOTE

Hydraulic system is in by-pass mode when hydraulic system no longer operates.

(b) Hold HOIST lever (1) in UP position until hydraulic system is in by-pass mode.

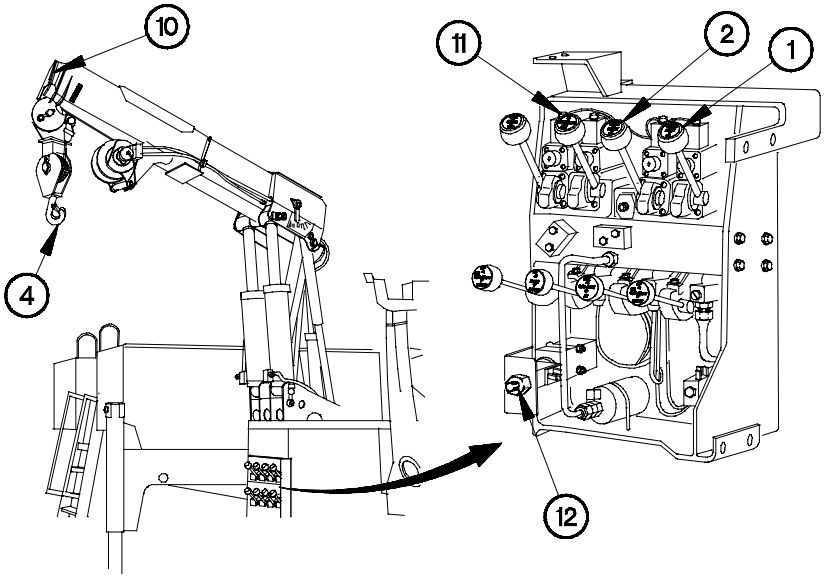

CAUTION

There should be no movement of Material Handling Crane (MHC) during this check. If there is movement in MHC, notify Unit Maintenance. Failure to comply may result in damage to equipment.

(c) Continue holding HOIST lever (1) in UP position while placing TELESCOPE lever (11) in OUT position and BOOM lever (2) first in the UP position and then in the DOWN position.

CAUTION

Approximately six seconds should pass before Overload Shutdown System (OSS) resets and boom responds to down movement. If no movement occurs, notify Unit Maintenance. Failure to comply may result in damage to equipment.

(d) While holding BOOM lever (2) in the DOWN position, pay out hook assembly (4) so no contact is made with boom nose (10).

(e) Press MANUAL OVERRIDE switch (12) to reset.

2-50. WRECKER MATERIAL HANDLING CRANE (MHC) OPERATION (CONT)

e. Connect MHC REMOTE CONTROL UNIT.

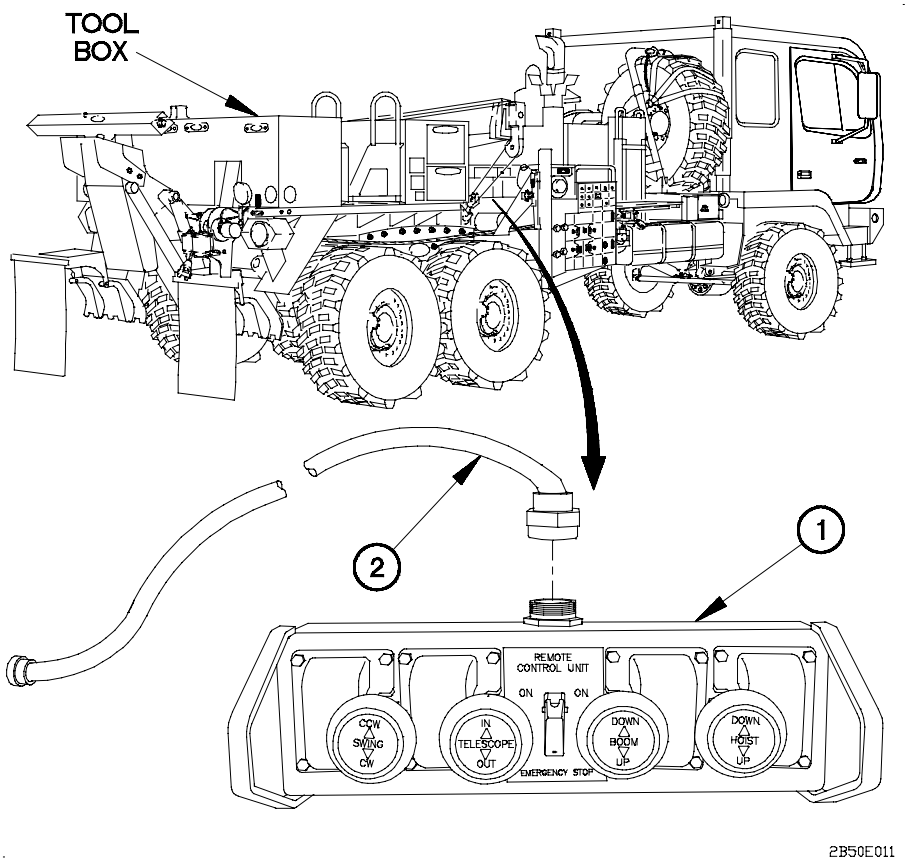

WARNING

Material Handling Crane (MHC) must be operated with REMOTE CONTROL UNIT if Operator is not able to keep load in sight at all times during operation. Failure to comply may result in serious injury or death to personnel.

(1) Remove MHC REMOTE CONTROL UNIT (1) and cable (2) from tool box.

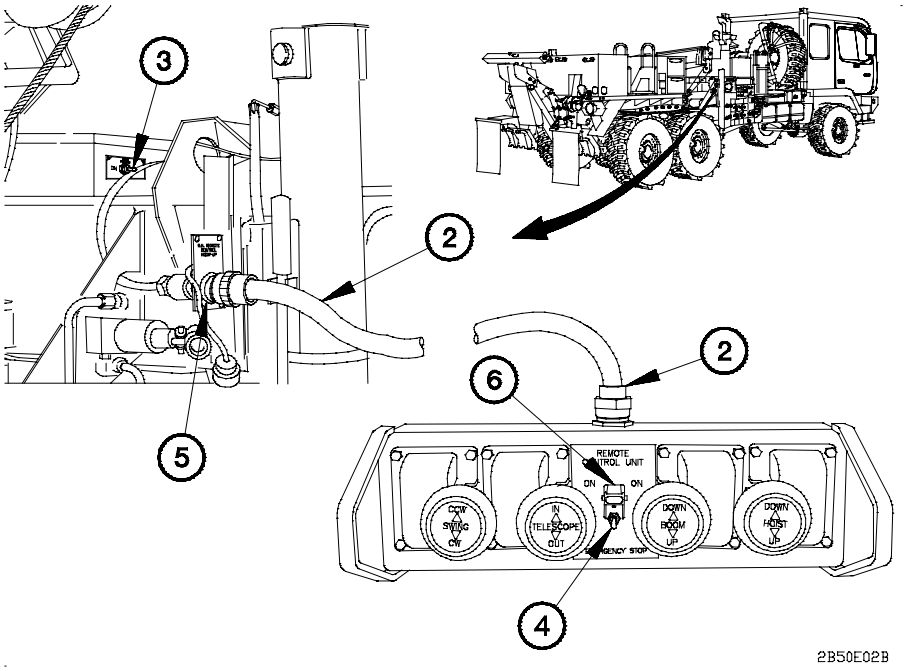

(2) Position MAIN POWER switch (3) to OFF.

(3) Position toggle switch (4) to OFF.

(4) Connect cable (2) to MHC REMOTE CONTROL UNIT (1).

WARNING

Main panel Material Handling Crane (MHC) controls must not be used when REMOTE CONTROL UNIT is connected. MHC may move inadvertently. Failure to comply may result in injury to personnel.

NOTE

RH and LH REMOTE CONTROL UNIT hook-up is the same. RH REMOTE CONTROL UNIT hook-up shown.

(5) Connect other end of cable (2) to RH REMOTE CONTROL HOOK UP receptacle (5).

(6) Position MAIN POWER switch (3) to ON.

(7) Lift guard (6) on toggle switch (4).

(8) Position toggle switch (4) to ON.

2-50. WRECKER MATERIAL HANDLING CRANE (MHC) OPERATION (CONT)

f. Rotate and Telescope Boom.

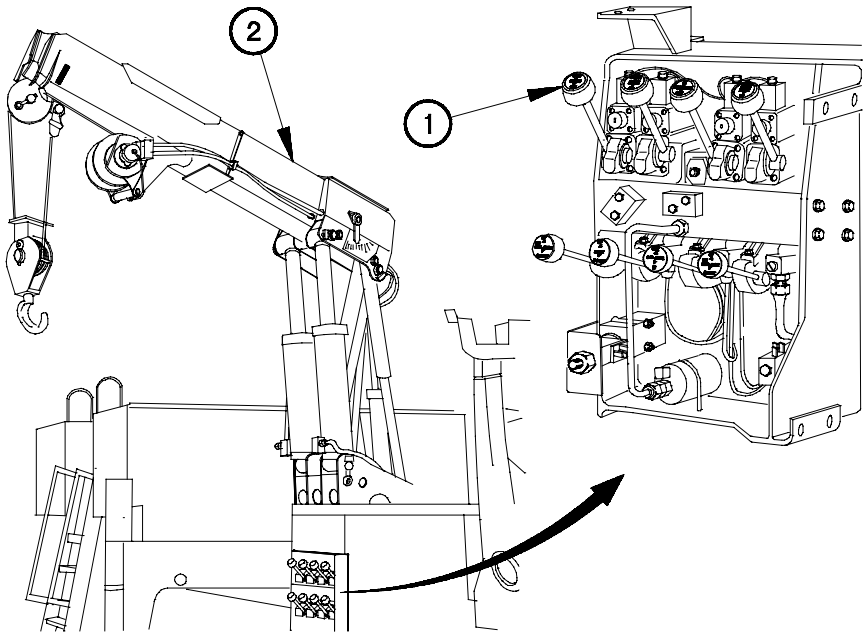

2B50F011

WARNING

Keep boom clear of all electrical lines and other obstacles while operating Material Handling Crane (MHC). Failure to comply may result in serious injury or death to personnel.

NOTE

- Operate MHC control levers using even pressure. Moving lever slightly will cause slow movement of MHC. Moving lever to full travel will cause faster movement of MHC.
- MHC can be operated by the main control panel or by the MHC remote control.

(1) Move SWING lever (1) to CW position to move boom (2) to the right.

(2) Move SWING lever (1) to CCW position to move boom (2) to the left.

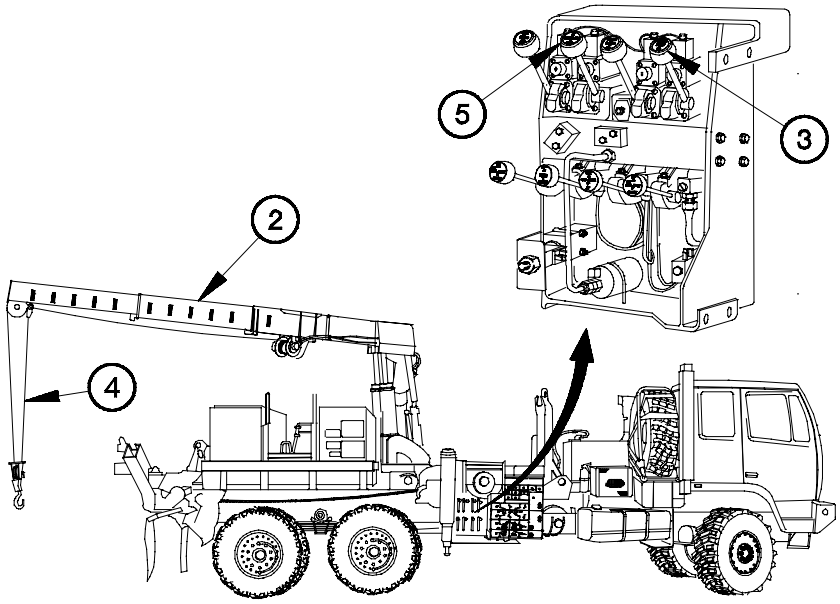

WARNING

Operator must keep control of load at all times. Attach guide lines to load. An assistant is required to attach guide lines. Failure to comply may result in serious injury or death to personnel.

CAUTION

Keep hook assembly at least 2 ft (0.6 m) from end of boom. If hook assembly hits end of boom, Material Handling Crane (MHC) will lose power for several seconds and cable or hook assembly may be damaged.

NOTE

Operate HOIST lever and TELESCOPE lever at the same time.

(3) Move HOIST lever (3) to DOWN position to pay out cable (4) and TELESCOPE lever (5) to OUT position to extend boom (2).

2-50. WRECKER MATERIAL HANDLING CRANE (MHC) OPERATION (CONT)

g. Raise and Lower Load.

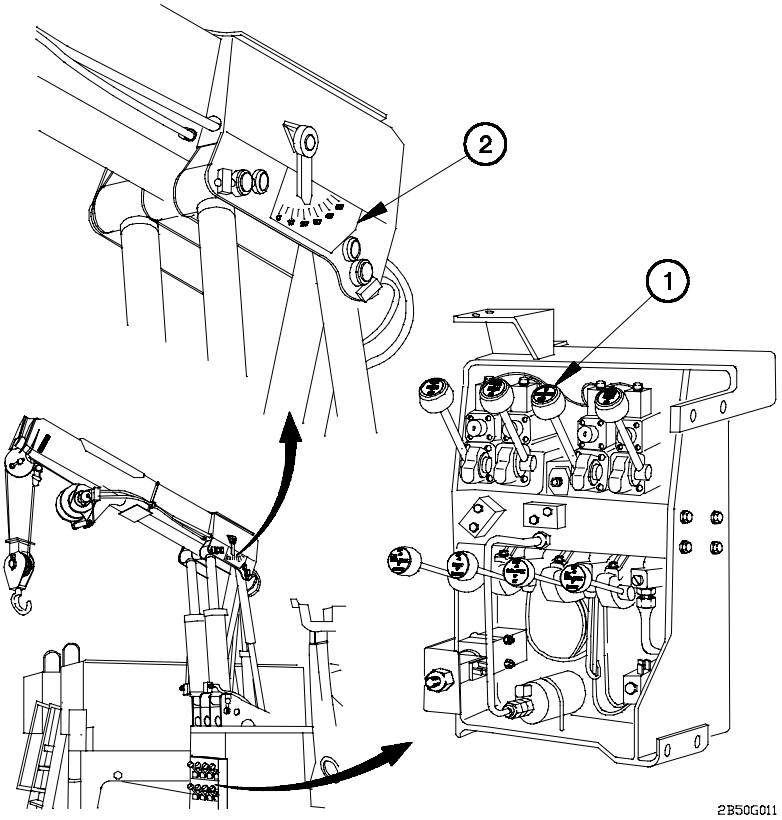

WARNING

Area must be clear of personnel before operating swing or telescoping boom. Boom must be rotated and telescoped slow enough so Operator has control of load. If operator cannot see load during operation, operate Material Handling Crane (MHC) with remote control unit. Failure to comply may result in serious injury or death to personnel.

(1) Refer to Table 2-23. Wrecker Material Handling Crane (MHC) Range Diagram Summary to determine correct boom angle setting.

(2) Move BOOM lever (1) to UP position until boom angle indicator (2) shows correct boom angle as determined in step (1).

Table 2-23. Wrecker Material Handling Crane (MHC) Range Diagram Summary

DISTANCE LOAD IS FROM MHC	BOOM ANGLE	HEIGHT OF BOOM	MAXIMUM LOAD
18 ft (5.5 m)	5 degrees	11.5 ft (3.5 m)	6,500 lbs (2,951 kgs)[1]
17.5 ft (5.3 m)	15 degrees	15 ft (4.6 m)	7,000 lbs (3,178 kgs)
16 ft (4.9 m)	27 degrees 10 degrees	19 ft (5.8 m) 13 ft (4.0 m)	7,500 lbs (3,405 kgs) 8,000 lbs (3,632 kgs)
14.5 ft (4.4 m)	38 degrees 27 degrees 15 degrees	21.5 ft (6.6 m) 18 ft (5.5 m) 14 ft (4.3 m)	8,000 lbs (3,632 kgs) 8,500 lbs (3,859 kgs) 9,500 lbs (4,313 kgs)
14 ft (4.3 m)	39 degrees 30 degrees 17 degrees 5 degrees	22 ft (6.7 m) 18.5 ft (5.6 m) 15 ft (4.6 m) 11 ft (3.4 m)	8,000 lbs (3,632 kgs) 9,000 lbs (4,086 kgs) 10,000 lbs (4,540 kgs) 10,000 lbs (4,540 kgs)
12.5 ft (3.8 m)	47 degrees 42 degrees 34 degrees 28 degrees	23.5 ft (7.2 m) 21 ft (6.4 m) 18.5 ft (5.6 m) 16.5 ft (5.0 m)	9,000 lbs (4,086 kgs) 10,000 lbs (4,540 kgs) 10,000 lbs (4,540 kgs) 10,000 lbs (4,540 kgs)
11 ft (3.4 m)	53 degrees 47 degrees 43 degrees 40 degrees	25 ft (7.6 m) 22.5 ft (6.9 m) 20 ft (6.1 m) 19 ft (5.8 m)	9,000 lbs (4,086 kgs) 10,000 lbs (4,540 kgs) 11,000 lbs (4,994 kgs) 11,000 lbs (4,994 kgs)
9 ft (2.7 m)	57 degrees 53 degrees 50 degrees	24 ft (7.3 m) 22 ft (6.7 m) 21 ft (6.4 m)	10,000 lbs (4,540 kgs) 11,000 lbs (4,994 kgs) 11,000 lbs (4,994 kgs)
8 ft (2.4 m)	57 degrees 55 degrees	22.5 ft (6.9 m) 21.5 ft (6.6 m)	11,000 lbs (4,994 kgs) 11,000 lbs (4,994 kgs)
7 ft (2.1 m)	20 degrees	13 ft (4.0 m)	11,000 lbs (4,994 kgs)
4 ft (1.2 m)	55 degrees	16 ft (4.9 m)	11,000 lbs (4,994 kgs)

[1] Maximum load is only 5,000 lbs (2,270 kgs) when boom is centered over rear of vehicle.

2-50. WRECKER MATERIAL HANDLING CRANE (MHC) OPERATION (CONT)

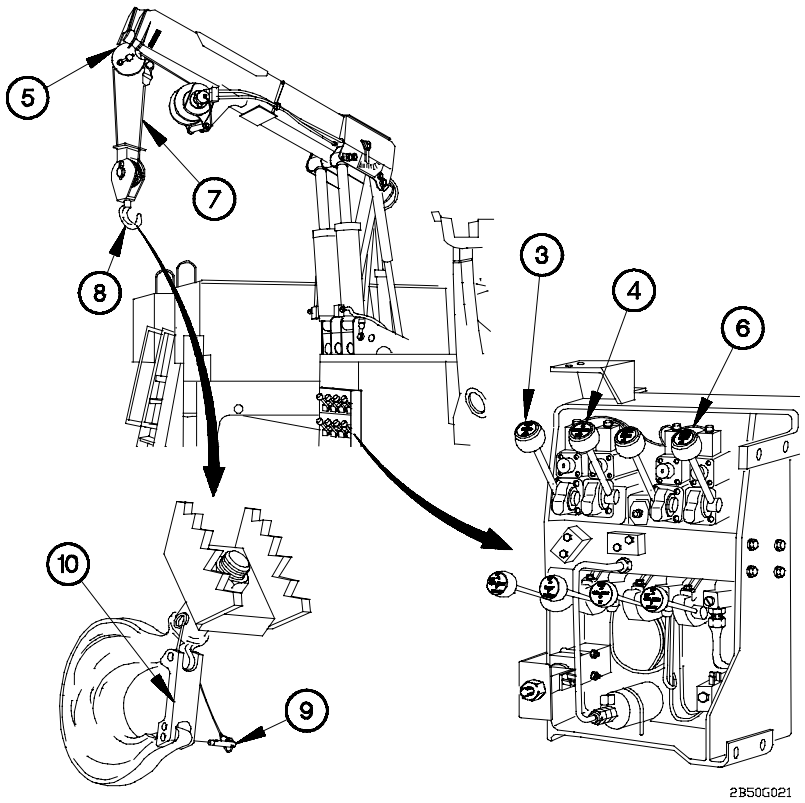

CAUTION

- Do not allow excessive slack to build-up when paying out cable. Failure to comply may result in damage to equipment.
- Use only a straight pull when lifting load. Failure to comply may result in damage to equipment.

(3) Operate SWING lever (3) and TELESCOPE lever (4) to center end of boom (5) directly over load.

(4) Operate HOIST lever (6) to reel in or pay out cable (7) and connect hook assembly (8) to load.

(5) Install safety pin (9) in hook assembly latch (10).

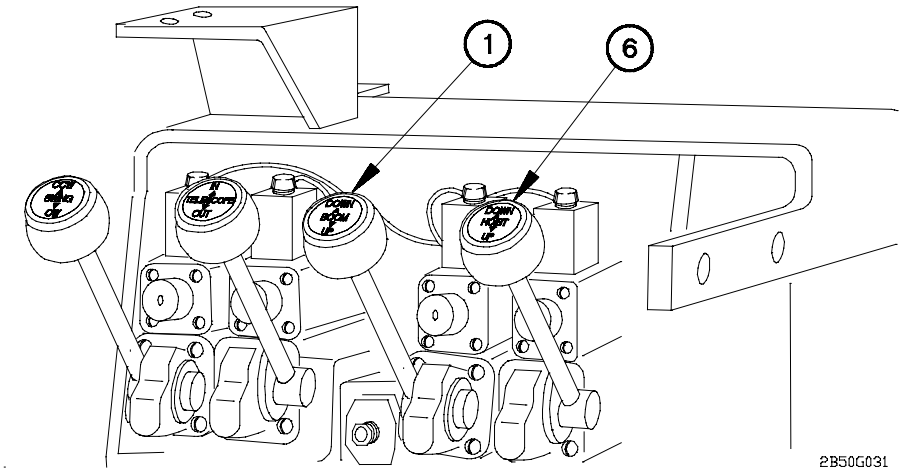

WARNING

Ensure there are at least five wraps of cable on hoist drum at all times. Failure to comply may result in serious injury or death to personnel or damage to equipment.

CAUTION

- Do not jerk HOIST lever. Load may bounce and result in damage to equipment or load.
- Do not lift load more than maximum load rating for Material Handling Crane (MHC). Failure to comply may result in damage to equipment.
- Ensure boom and load are clear of vehicle sides when loading and unloading cargo. Hitting side of vehicle with boom or load may damage Material Handling Crane (MHC), load, or vehicle.

(6) Move HOIST lever (6) to UP position to lift load. Move BOOM lever (1) to UP position to lift load higher.

(7) Move HOIST lever (6) to DOWN position to lower load. Move BOOM lever (1) to DOWN position to lower load further.

2-50. WRECKER MATERIAL HANDLING CRANE (MHC) OPERATION (CONT)

h. Stow MHC.

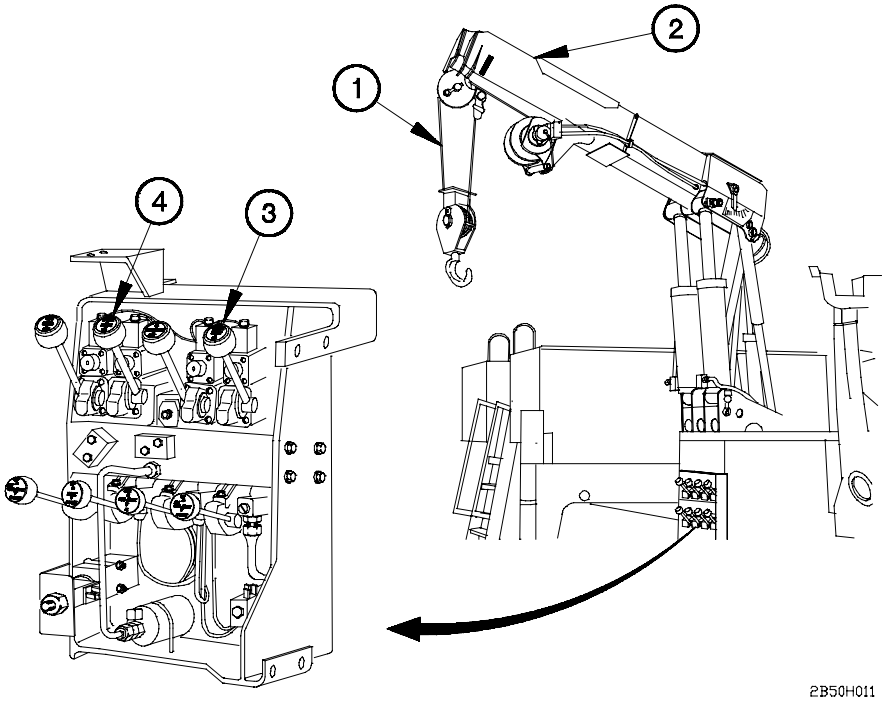

CAUTION

Boom must be positioned with outriggers and fully retracted before lowering. Observe boom during lowering to ensure no contact is made with tool box. Failure to comply may result in damage to equipment.

NOTE

Operate HOIST lever and TELESCOPE lever at the same time.

(1) Reel in cable (1) until approximately 2 ft (0.6 m) of cable hangs from boom (2).

(2) Move HOIST lever (3) to UP position to reel in cable (1) and TELESCOPE lever (4) to IN position to retract boom (2).

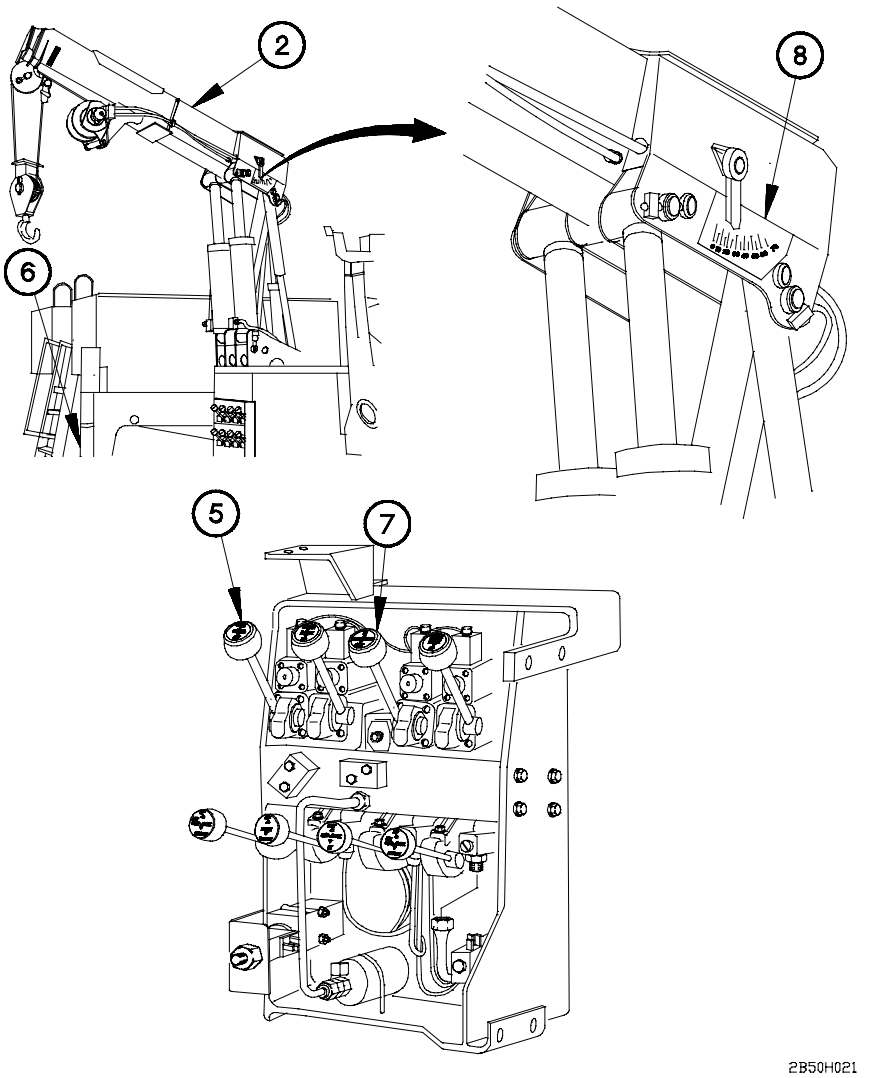

NOTE

Position boom so that cable and hook assembly are on passenger's side of vehicle.

(3) Operate SWING lever (5) to position boom (2) in line with outrigger (6).

(4) Operate BOOM lever (7) so that boom angle indicator (8) reads approximately 45 degrees.

2-50. WRECKER MATERIAL HANDLING CRANE (MHC) OPERATION (CONT)

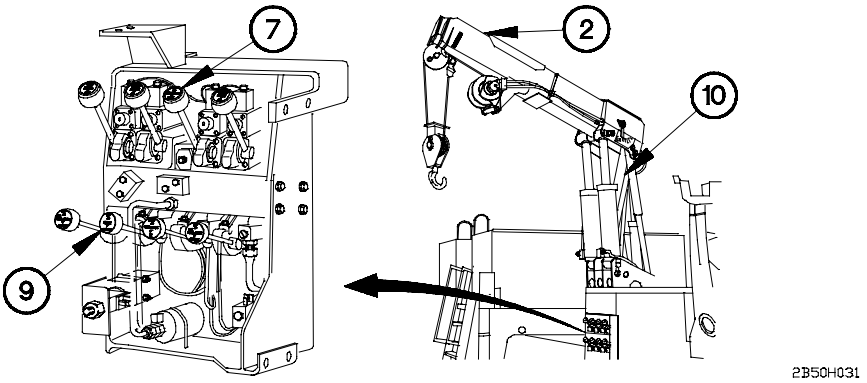

NOTE

Operate BOOM lever and MAST lever at the same time so that 45-degree reading is maintained on boom angle indicator.

(5) Move BOOM lever (7) and MAST lever (9) to DOWN position until mast (10) is fully lowered.

(6) Move BOOM lever (7) to DOWN position until boom (2) is fully lowered.

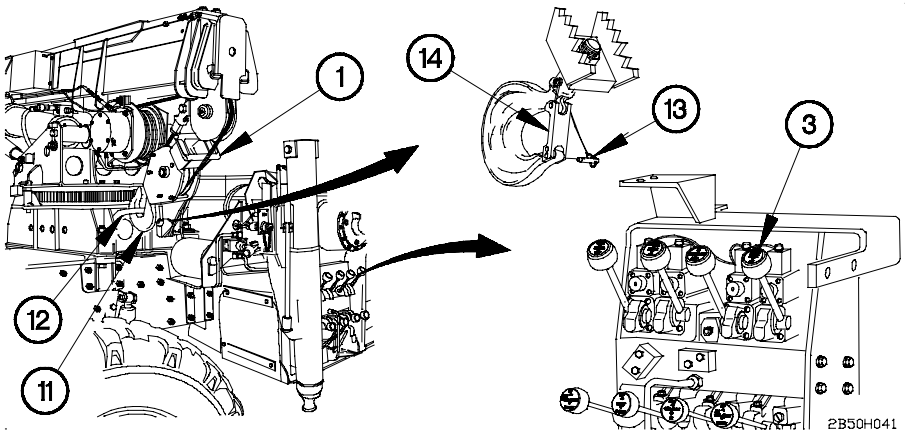

(7) Connect hook assembly (11) to stowage ring (12).

(8) Install safety pin (13) in hook assembly latch (14).

(9) Move HOIST lever (3) to UP position to remove all slack from cable (1).

i. Disconnect MHC REMOTE CONTROL UNIT.

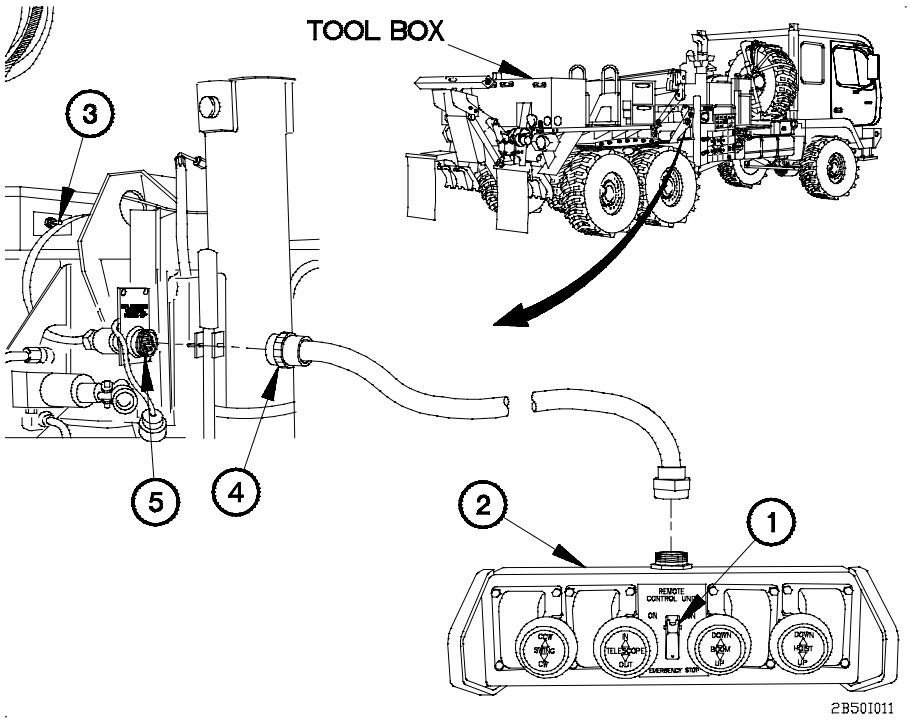

(1) Position toggle switch (1) to OFF.

(2) Position MAIN POWER switch (3) to OFF.

(3) Remove cable (4) from RH REMOTE CONTROL HOOK UP receptacle (5).

(4) Remove cable (4) from MHC REMOTE CONTROL UNIT (2).

(5) Stow cable (4) and MHC REMOTE CONTROL UNIT (2) in tool box.

NOTE

Perform step (6) if MHC operation is still required.

(6) Position MAIN POWER switch (3) to ON.

2-50. WRECKER MATERIAL HANDLING CRANE (MHC) OPERATION (CONT)

j. Stow Outriggers and Shut Down MHC.

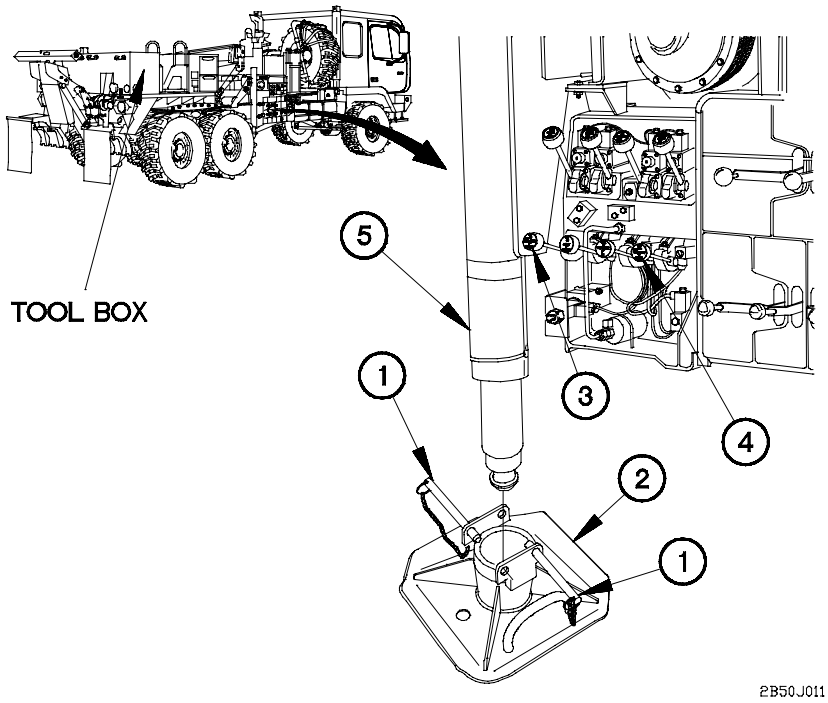

NOTE

Both outrigger pads are removed from outriggers the same way. Right outrigger pad shown.

(1) Remove two pins (1) from outrigger pads (2).

NOTE

Operate LH O/R JACK lever and RH O/R JACK lever at the same time.

(2) Move LH O/R JACK lever (3) and RH O/R JACK lever (4) to UP position until outriggers (5) are fully retracted.

(3) Install two pins (1) in outrigger pads (2).

(4) Stow two outrigger pads (2) in tool box.

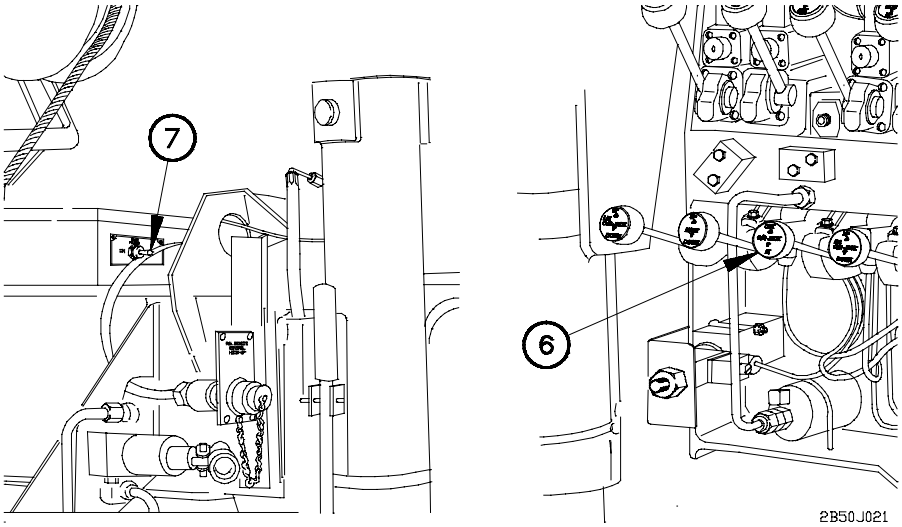

(5) Move O/R JACK lever (6) to IN position until outriggers are fully retracted.

(6) Position MAIN POWER switch (7) to OFF.

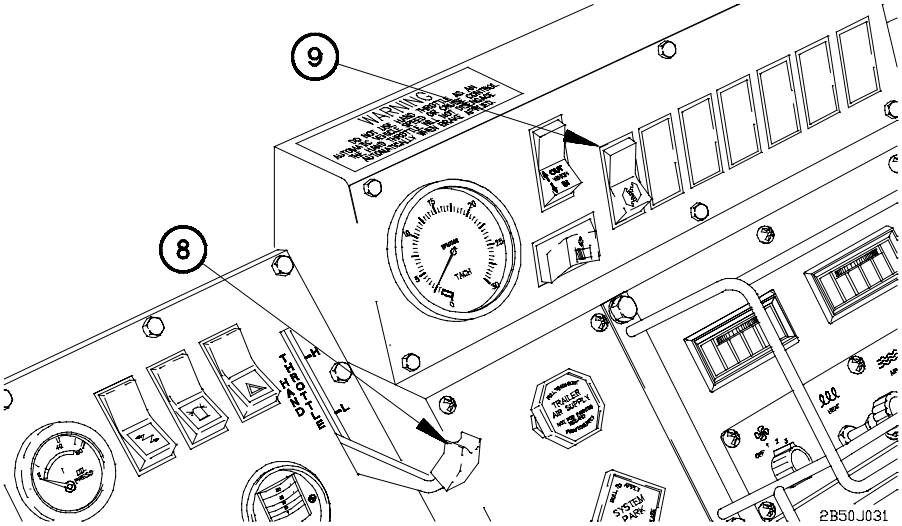

(7) Set engine speed to idle (750 rpm) by decreasing HAND THROTTLE lever (8) to full down position.

(8) Position PTO switch (9) to off.

(9) Shut down engine (para 2-27f).

2-51. AUXILIARY EQUIPMENT OPERATION

a. Stow Rifle in Mount.

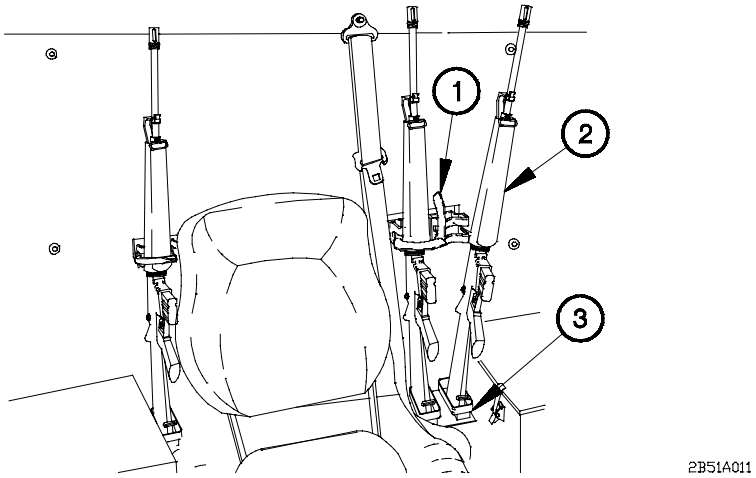

(1) Turn handle (1) up.

(2) Position rifle (2) in support (3).

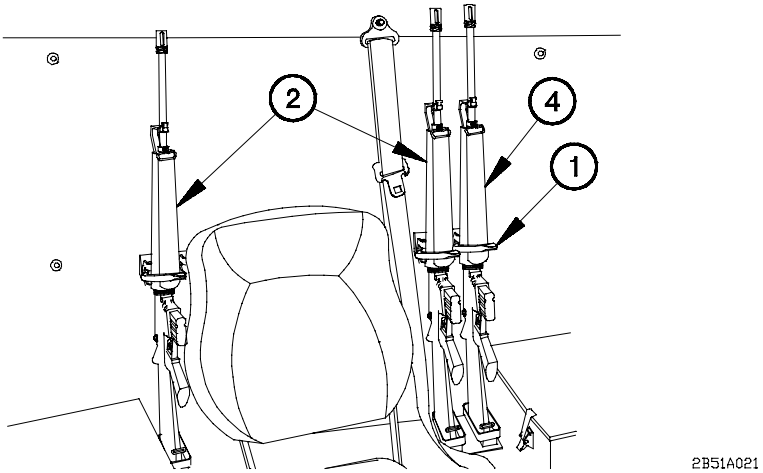

(3) Pull out on handle (1).

(4) Turn handle (1) down over rifle handguard (4).

(5) Check that rifle (2) is secure.

(6) Perform steps (1) through (5) for remaining rifles (2).

b. Remove Rifle from Mount.

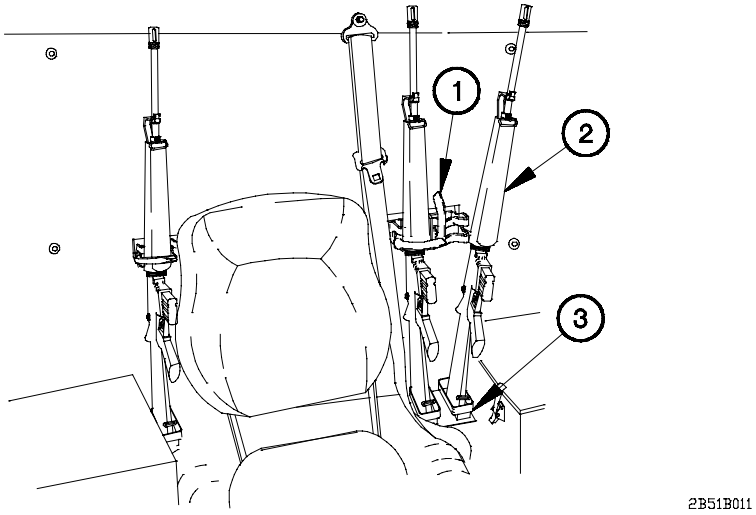

(1) Pull out on handle (1).

(2) Turn handle (1) up.

(3) Remove rifle (2) from support (3).

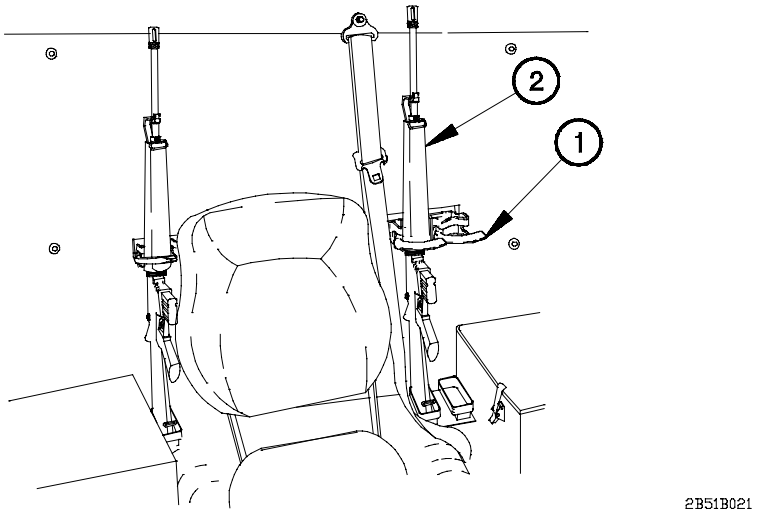

(4) Turn handle (1) down to the horizontal position.

(5) Perform steps (1) through (4) for remaining rifles (2).

2-51. AUXILIARY EQUIPMENT OPERATION (CONT)

c. M42 Alarm Mounting Location.

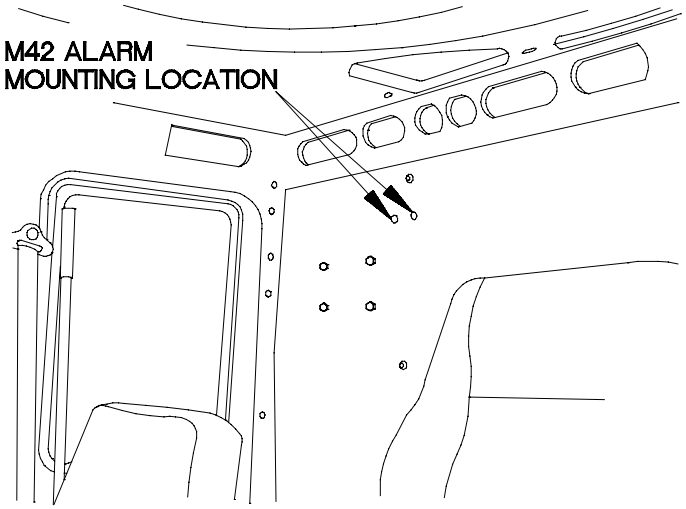

d. M43 Chemical Detector Mounting Location.

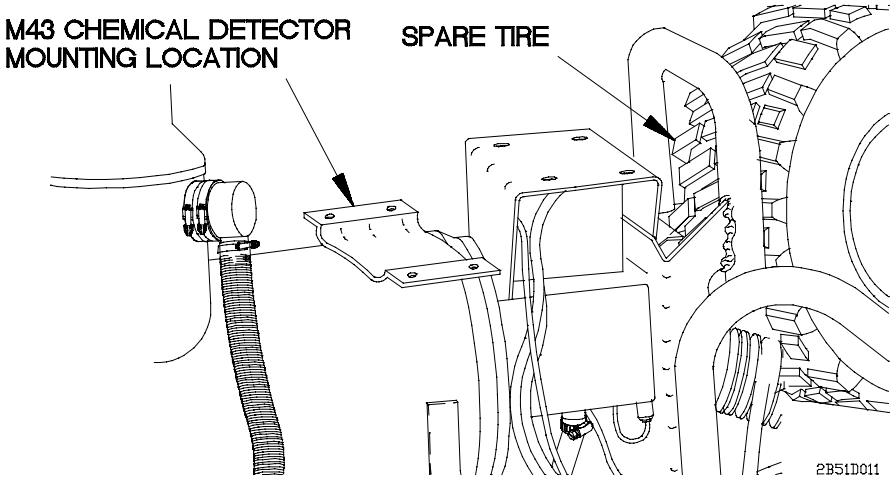

e. Decontamination Apparatus Mounting Location.

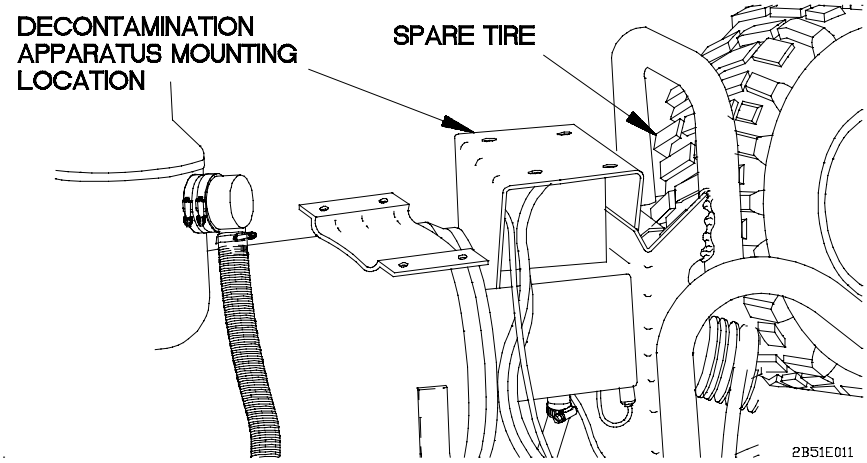

f. Operate Chemical Alarm Kit.

Refer to TM 3-6665-225-12 for operating instructions.

g. Operate Decontamination Kit.

Refer to TM 3-4320-214-12&P for operating instructions.

h. Operate Radio.

Radio equipment will be mounted in cab on rear panel, Refer to TM 11-5820-401-10-1 (AN/VRC-46) or TM 11-5820-890-10-1 (AN/VCR-90)
for operating instructions.

2-52. BACK-UP HYDRAULIC PUMP OPERATION

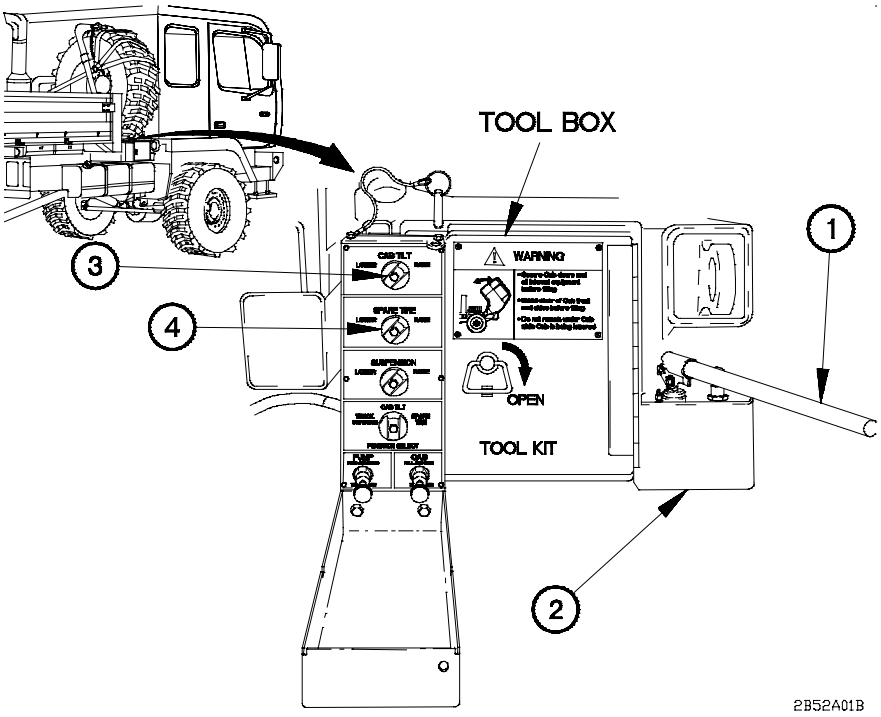

(1) Remove handle (1) from tool box.

(2) Insert handle (1) in back-up hydraulic pump (2).

(3) Pump handle (1) until cab or spare tire is in desired position.

NOTE

- If cab or spare tire does not move, perform steps (4) through (7).
- If performing steps (4) through (7) does not accomplish the required action, notify Unit Maintenance.

(4) Turn CAB TILT (3) or SPARE TIRE (4) knob to the opposite position.

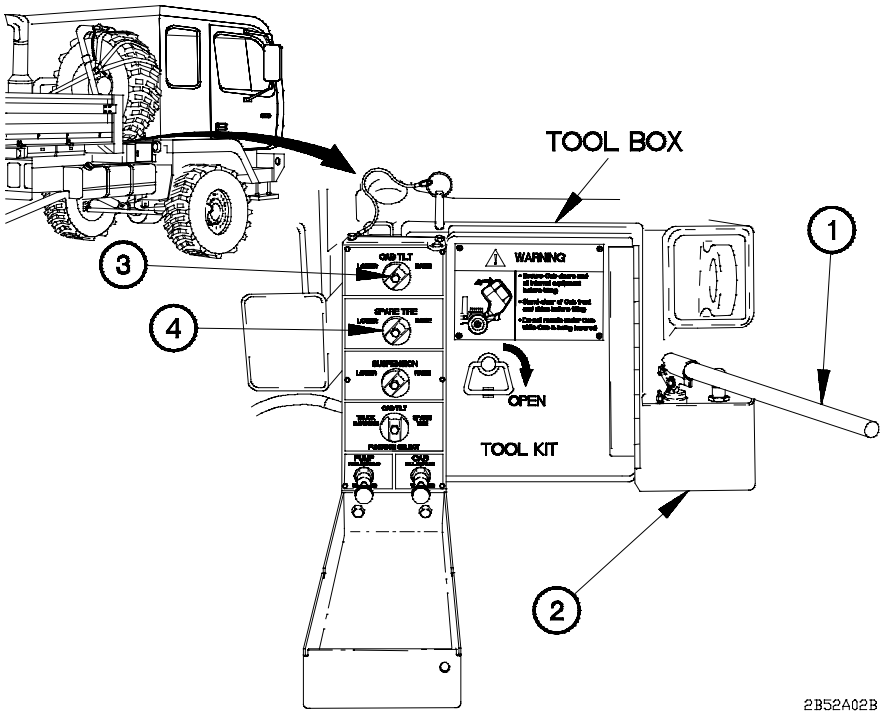

NOTE

- It may be necessary to perform step (5) several times before cab or spare tire begins to move.
- A downward cycle should take approximately 3 seconds.

(5) Pump handle (1) slowly downward until cab or spare tire moves a few inches.

(6) Turn CAB TILT (3) or SPARE TIRE (4) knob to the opposite position.

(7) Pump handle (1) until cab or spare tire is in desired position.

(8) Place pump handle (1) in down position.

(9) Remove handle (1) from back-up hydraulic pump (2).

(10) Stow handle (1) in tool box.

2-53. DATA AND INSTRUCTION PLATES

WARNING

Data and instruction plates given below must be followed at all times to safely operate vehicle. Failure to comply may result in injury to personnel or damage to equipment.

a. All Vehicles, Left Side.

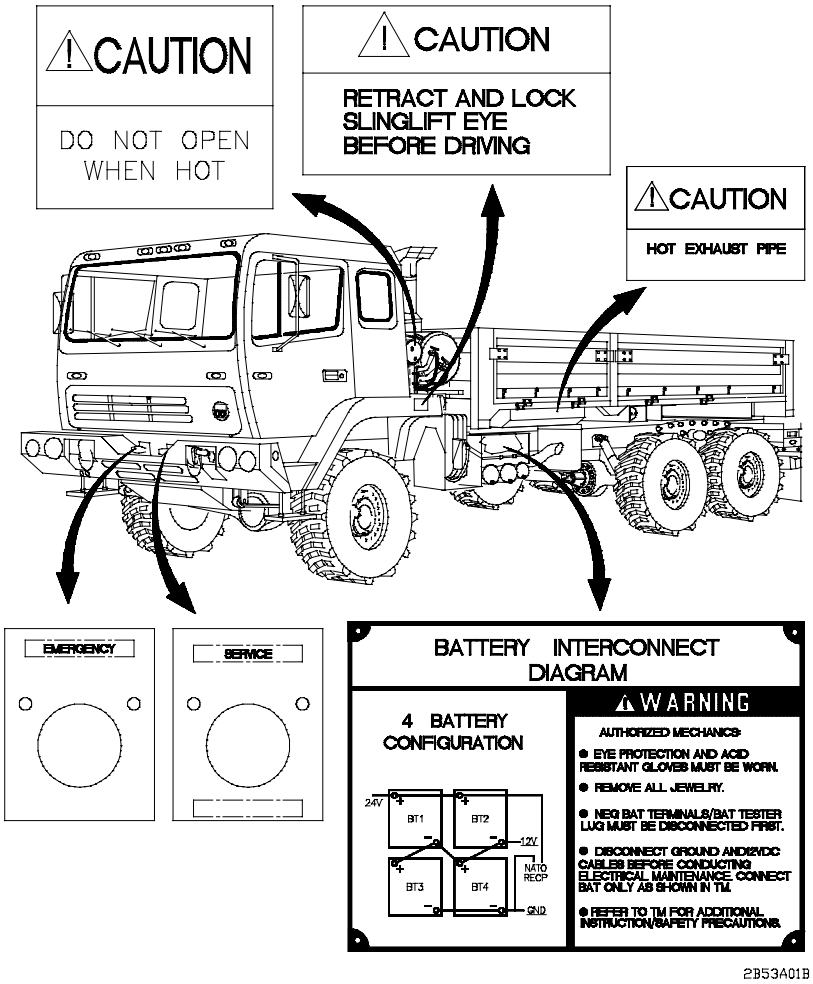

b. All Vehicles, Right Side.

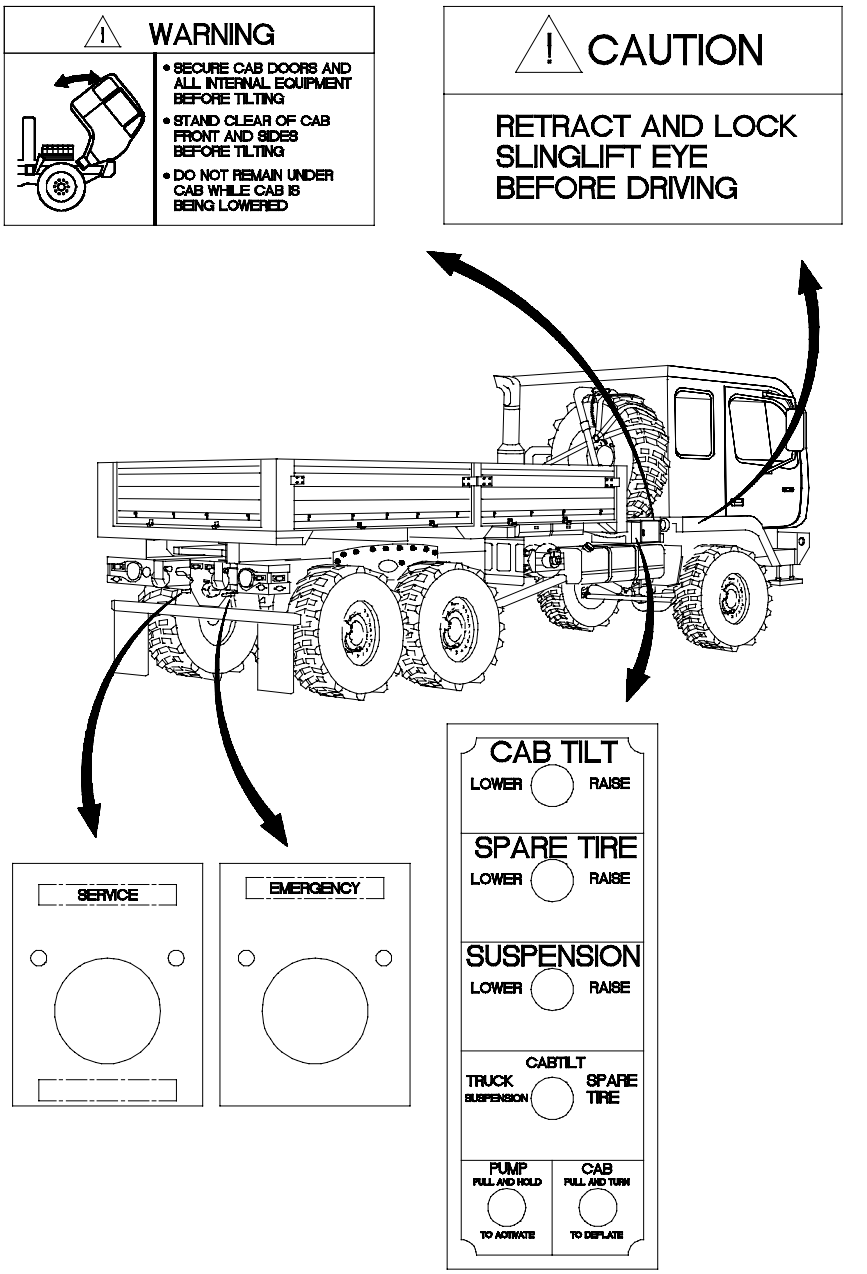

2-53. DATA AND INSTRUCTION PLATES (CONT)

b. All Vehicles, Right Side (Cont).

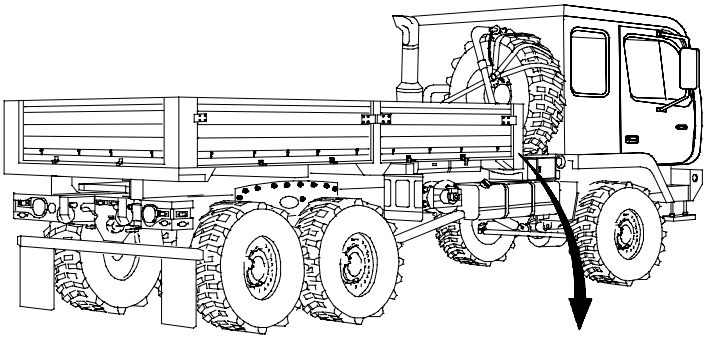

CAB

RAISE
1. ENSURE DOORS ARE SECURE AND PERSONNEL AND EQUIPMENT ARE AWAY FROM CAB FRONT.
2. SELECT "CAB TILT" FUNCTION.
3. SELECT CAB TILT "RAISE".
4. PRESS AND HOLD "PUMP" SWITCH UNTILL CAB MOVES PAST THE OVER-CENTER POSITION.

LOWER
1. ENSURE ALL TOOLS AND EQUIPMENT ARE REMOVED FROM ENGINE COMPARTMENT AND OFF RAILS.
2. SELECT "CAB TILT" FUNCTION.
3. SELECT CAB TILT "LOWER".
4. PRESS AND HOLD "PUMP" SWITCH UNTILL CAB MOVES PAST OVER-CENTER AND LET CAB FREE-FALL TO LATCH.
5. ENSURE CAB LOCK IS FULLY RETRACTED.

SPARE TIRE

LOWER
1. REMOVE SPARE TIRE RETAINING STRAP
2. SELECT "SPARE TIRE" FUNCTION.
3. SELECT SPARE TIRE "LOWER".
4. PUSH AND HOLD "PUMP" SWITCH UNTILL SPARE TIRE IS OVER-CENTER THEN ALLOW TIRE TO FREE-FALL TO GROUND

RAISE
1. INSTALL SPARE TIRE IN CARRIER.
2. SELECT "SPARE TIRE" FUNCTION.
3. SELECT SPARE TIRE "RAISE".
4. PUSH AND HOLD "PUMP" SWITCH UNTILL SPARE TIRE IS FULLY SEATED IN THE CARRIER.
5. INSTALL SPARE TIRE RETAINING STRAP.

SUSPENSION

LOWER
1. SET PARK BRAKE START ENGINE AND LET IDLE.
2. OPEN THE VALVES TO DEFLATE FRONT TIRES.
3. RAISE CAB.
4. REMOVE SAFETY PINS FROM CYLINDERS AND REMOVE CHAINS FROM STOWAGE POSITION.
5. SELECT "TRUCK SUSPENSION" FUNCTION.
6. SELECT SUSPENSION "RAISE".
7. PUSH AND HOLD "PUMP" SWITCH UNTILL CHAINS ALIGN WITH PINS ON AXLE.
8. SECURE CHAINS TO AXLE WITH LYNCH PINS.
9. SELECT SUSPENSION "LOWER".
10. PUSH AND HOLD "PUMP" SWITCH UNTILL CYLINDER IS RETRACTED. INSTALL LOCK PINS
11. LOWER CAB. DEFLATE AND SECURE AIR SPRINGS

RAISE
1. SET PARK BRAKE START ENGINE AND LET IDLE.
2. CLOSE TIRE VALVES. SELECT CTIS "RUN FLAT AND HIGHWAY" AT THE SAME TIME.
3. INFLATE CAB AIR SPRINGS BY REMOVING PINS THEN PUSH IN AND TURN "CAB" KONS. STOW PINS.
4. SELECT "TRUCK SUSPENSION" FUNCTION.
5. SELECT SUSPENSION "LOWER".
6. PUSH AND HOLD "PUMP" SWITCH UNTILL CYLINDER LOCKING PINS CAN BE REMOVED. RAISE CAB IF NEEDED.
7. SELECT SUSPENSION "RAISE".
8. PUSH AND HOLD "PUMP" SWITCH UNTILL CHAINS CAN BE REMOVED FROM AXLE PINS.
9. RELEASE HOLD-DOWN CHAINS ON EACH SIDE OF FRONT SUSPENSION BY REMOVING LYNCH PINS CHAINS WITH LINCH PINS.
10. SELECT SUSPENSION "LOWER".
11. PUSH AND HOLD "PUMP" SWITCH UNTIL CYLINDER IS RETRACTED.
12. SECURE CYLINDER WITH LOCKING PINS.
13. STOW CHAINS WITH LINCH PINS. LOWER CAB IF RAISED.

2B53B021

c. All Vehicles, Interior.

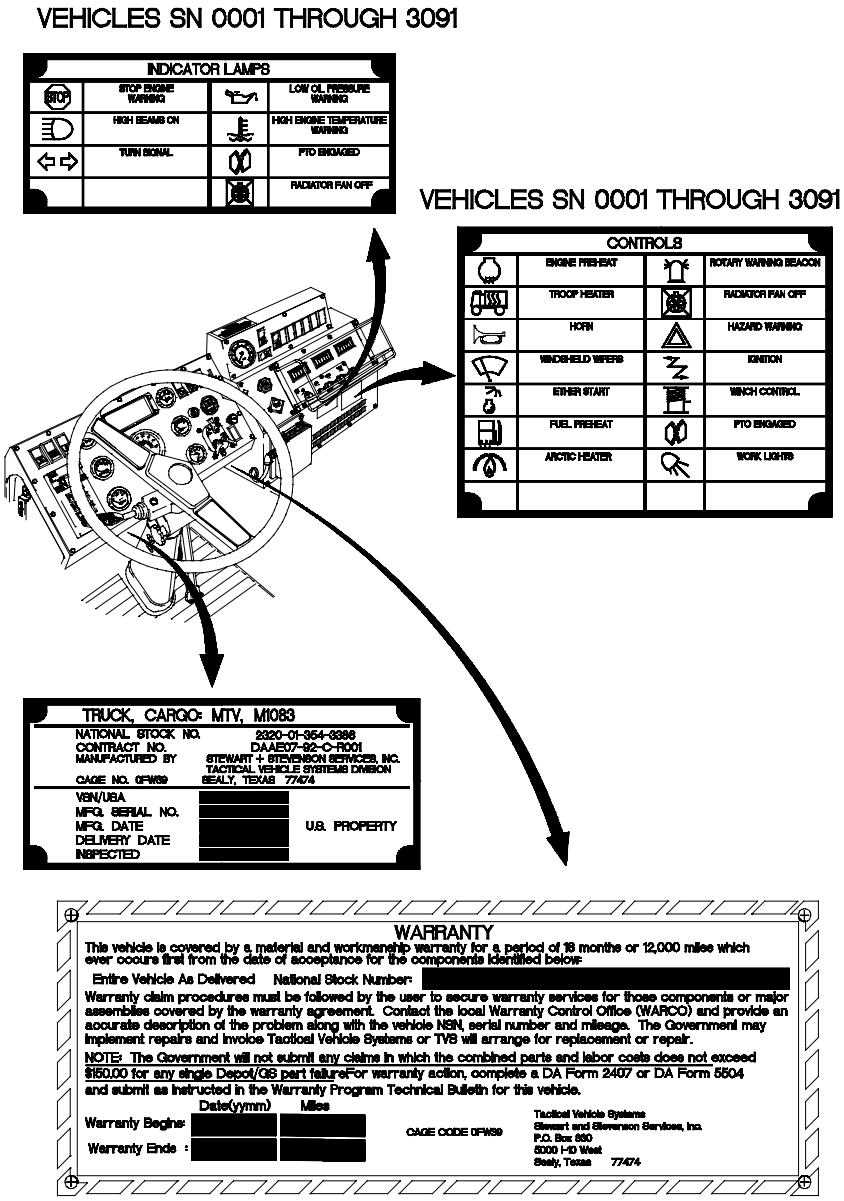

2-53. DATA AND INSTRUCTION PLATES (CONT)

c. All Vehicles, Interior (Cont).

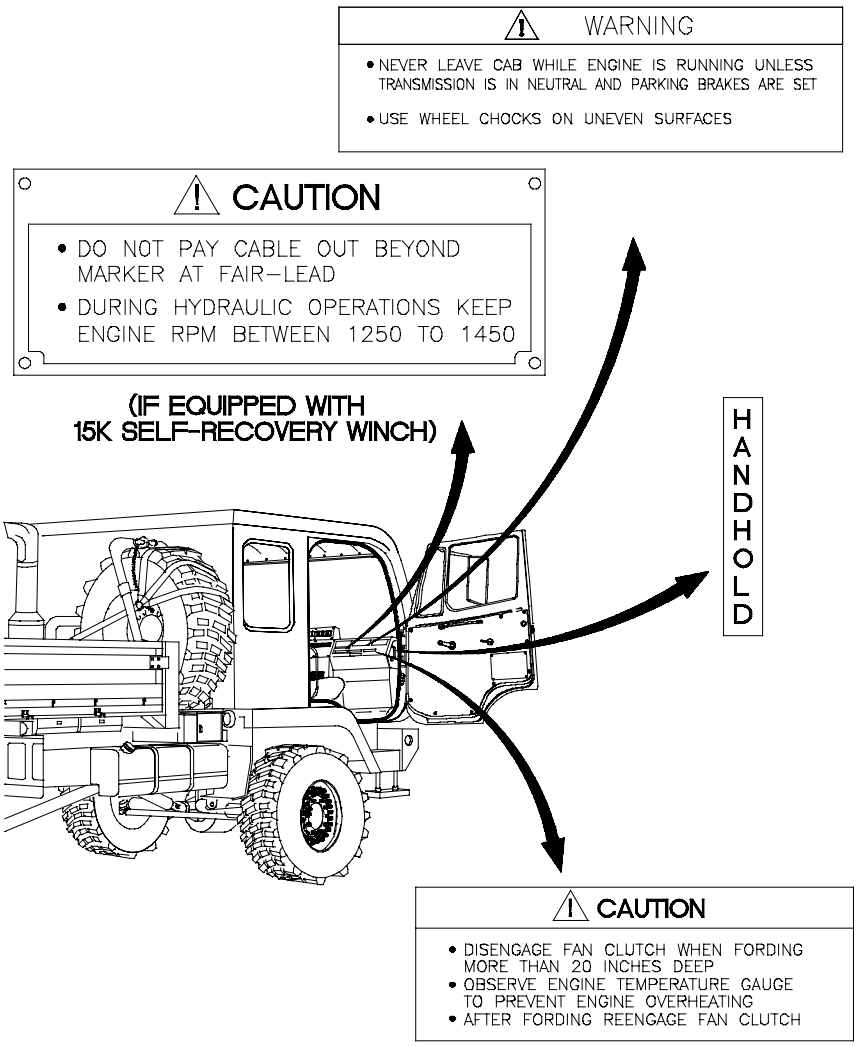

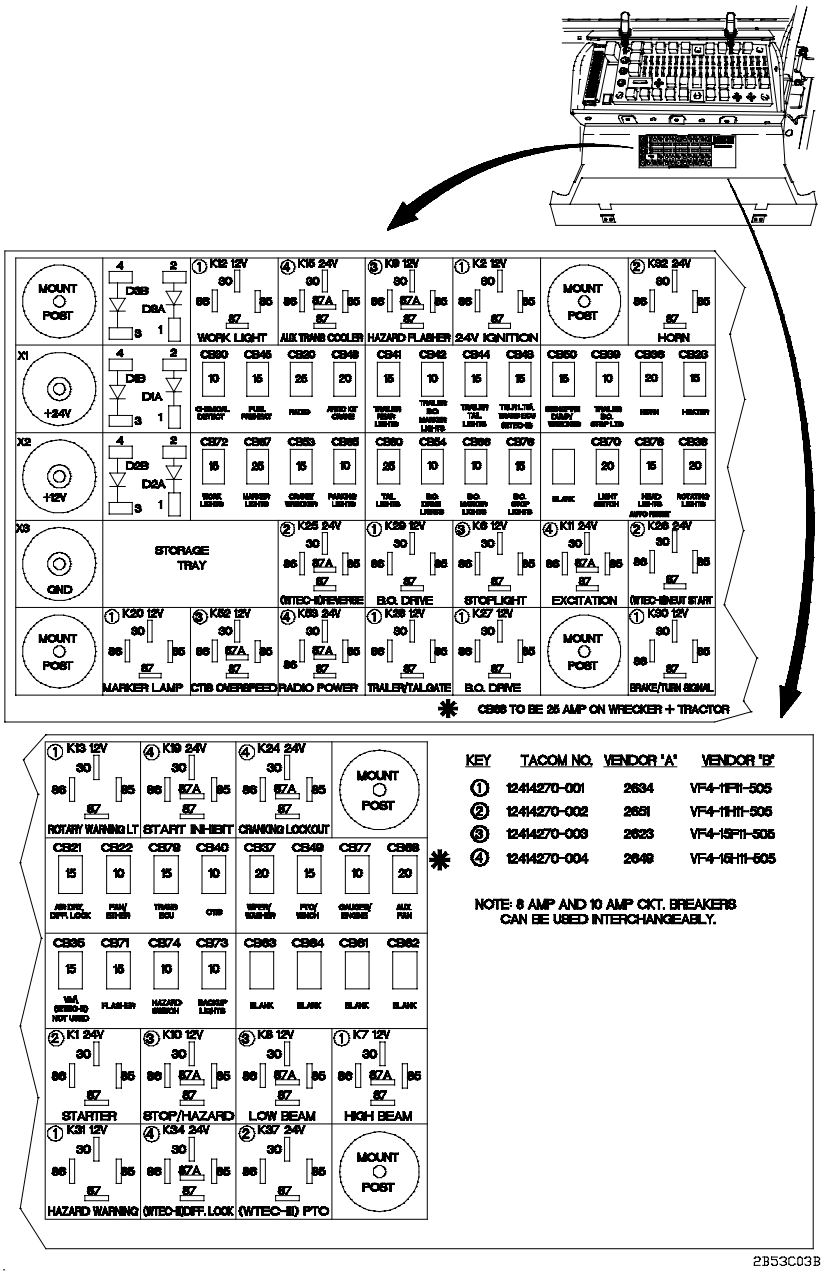

KEY	TACOM NO.	VENDOR 'A'	VENDOR 'B'
①	12414270-001	2634	VF4-11F11-505
②	12414270-002	2651	VF4-11H11-505
③	12414270-003	2623	VF4-15F11-505
④	12414270-004	2649	VF4-16H11-505

c. All Vehicles, Interior (Cont).

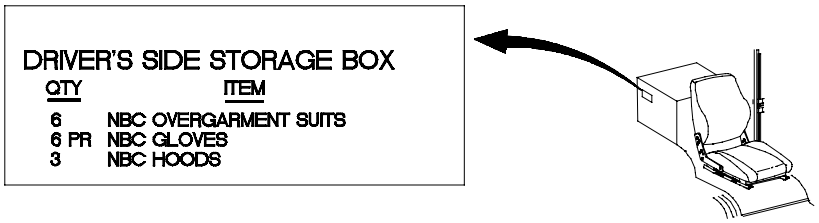

DRIVER'S SIDE STORAGE BOX

QTY	ITEM
6	NBC OVERGARMENT SUITS
6 PR	NBC GLOVES
3	NBC HOODS

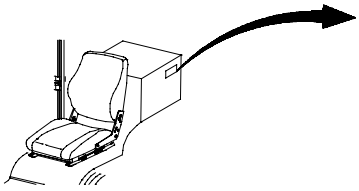

CO-DRIVER'S SIDE STORAGE BOX

QTY	ITEM
1	M9 CHEM AGENT DETECTOR PAPER
6 PR	NBC OVERBOOTS
3	NBC MASKS
1	M256 PORTABLE DETECTOR KIT
1	FIRST AID KIT

WEIGHT AND DIMENSIONAL DATA
TRUCK, CARGO: MTV, AIRDROP, W/WN, M-1093

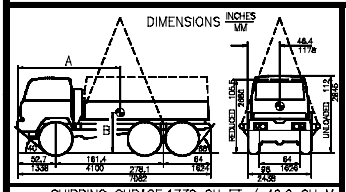

SHIPPING CUBAGE:1730 CU FT / 49.0 CU M

NOTE: TO REDUCE CAB HEIGHT REFER TO AIR TRANSPORT PROCEDURES IN TM 9-2320-366-10.

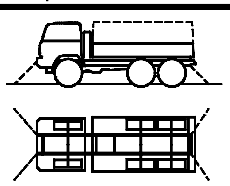

TIE-DOWN SCHEMATIC
NOTE : ONLY USE TIE-DOWN POINTS SHOWN ABOVE

WEIGHTS		FRONT AXLE	INTERMEDIATE AXLE	REAR AXLE	TOTAL WEIGHT		C G A	DISTANCE B	MAXIMUM PAYLOAD 5 TONS/4536 KG
CURB	LB	11848	5618	5618	23083	IN	131	43	TIRE DATA MAXIMUM COLD PRESSUR 95 PSI MAXIMUM SPEED 55 MPH/88 KMH
	KG	5374	2548	2548	10470	MM	3334	1102	
GROSS	LB	13741	9671	9671	33083	IN	147	56	TURNING RADIUS 40 FT / 12 M WALL TO WALL
	KG	6233	4387	4387	15006	MM	3735	1422	

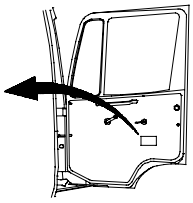

(RIGHT DOOR)

(TYPICAL)

2B53C031

2-53. DATA AND INSTRUCTION PLATES (CONT)

d. Vehicles With 15K Self-Recovery Winch (SRW).

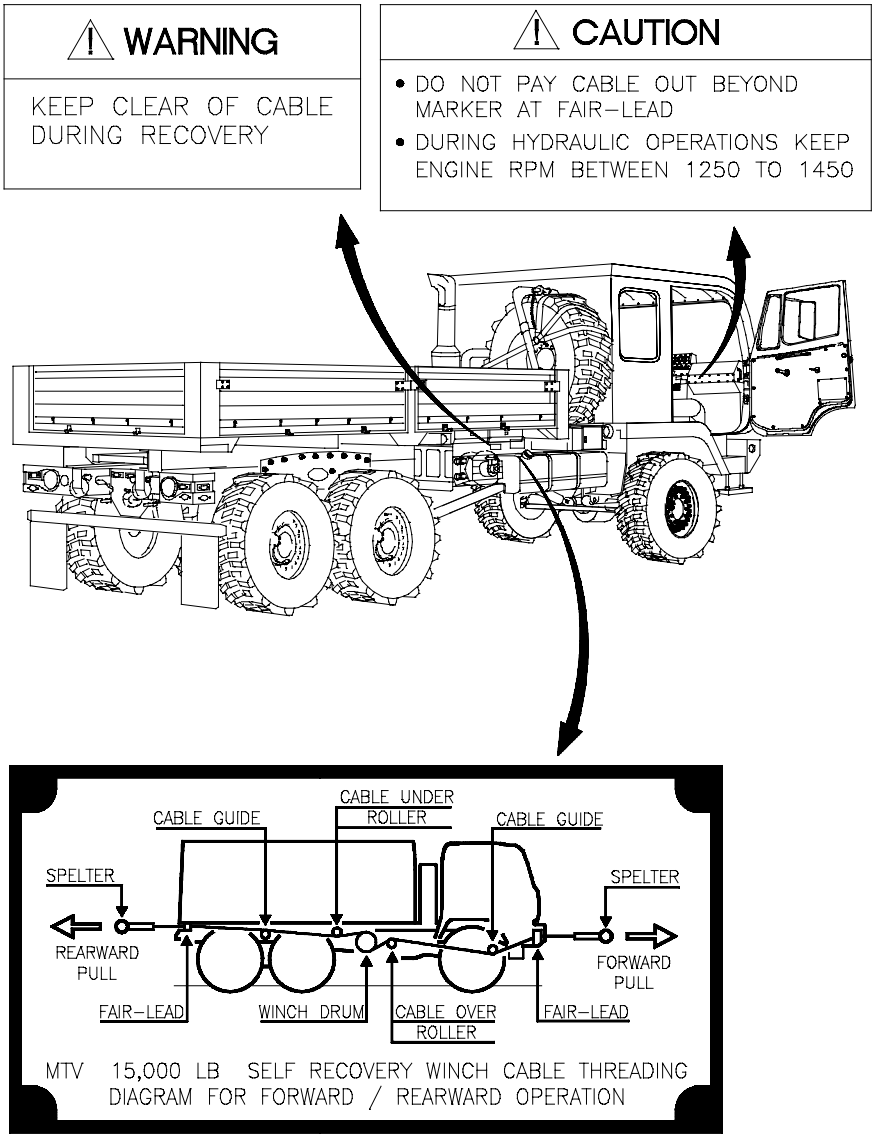

e. Vehicles With LMHC.

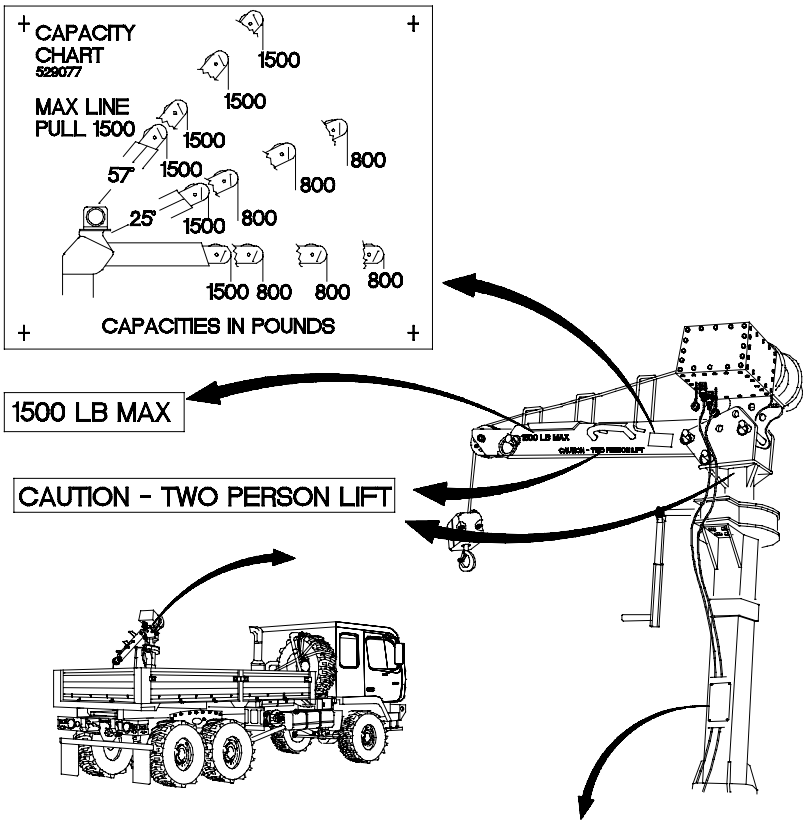

MTV CRANE	
STEWART & STEVENSON PART NO. [redacted]	MFR. PART NO. [redacted]
MODEL [redacted]	CONTRACT NO. [redacted]
MAX. CAPACITY [redacted]	SERIAL NO. [redacted]
MFR: GROVE NORTH AMERICA DIV. OF KIDDIE INDUSTRIES, INC. [redacted]	DATE OF MFR. [redacted]

2B53E011

2-53. DATA AND INSTRUCTION PLATES (CONT)

f. M1090/M1094.

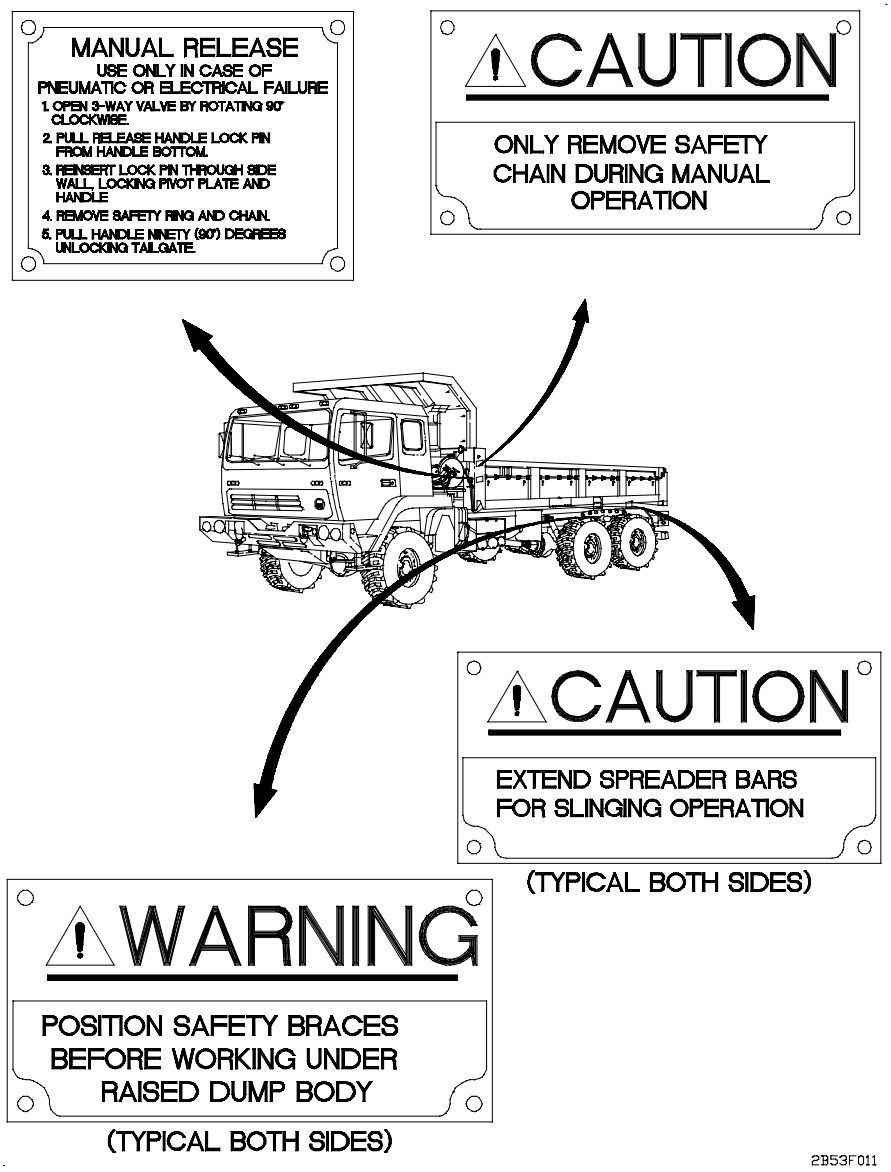

f. M1090/M1094 (Cont).

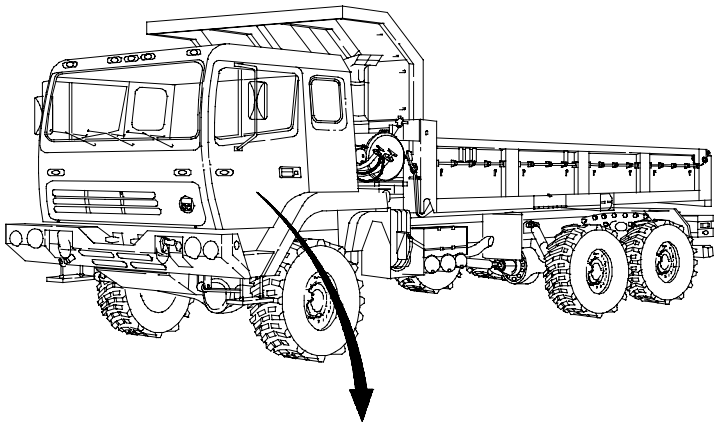

MATERIAL CAPACITY CHART
MTV DUMP M1090 AND M1094

MATERIAL	WEIGHT OF MATERIAL (LBS)		CAPACITY		MAXIMUM FUNCTIONAL LOAD (CU-YD) THAT DOES NOT OVERLOAD TRUCK
			LEVEL FULL 5.18 CU-YD OR 140.17 CU-FT	HEAPING FULL 7.78 CU-YD OR 210.12 CU-FT	
	PER CU-FT	PER CU-YD (KG/CUM)	LOADED WEIGHT LBS (KG)	LOADED WEIGHT LBS (KG)	
ASHES	43	1,161 (689)	6,026 (2,734)	9,033 (4,098)	
CINDERS	46	1,242 (737)	6,446 (2,924)	9,663 (4,384)	
CLAY, DRY LOOSE	77	2,079 (1,234)	10,790 (4,895)	16,175 (7,338)	4.5
CLAY, WET	110	2,970 (1,762)	15,414 (6,993)	23,107 (10,483)	3.0
CLAY AND GRAVEL	110	2,970 (1,762)	15,414 (6,993)	23,107 (10,483)	3.0
COAL, ANTHRACITE (HARD)	54	1,458 (865)	7,567 (3,433)	11,343 (5,148)	6.5
COAL, BITUMINOUS (SOFT)	81	2,187 (1,298)	11,351 (5,149)	17,015 (7,718)	4.5
COKE	28	756 (449)	3,924 (1,780)	5,887 (2,668)	
CONCRETE	138	3,726 (2,211)	19,338 (8,773)	28,988 (13,151)	2.5
CONCRETE MIX, WET	124	3,348 (1,986)	17,375 (7,883)	26,047 (11,817)	3.0
EARTH, DRY LOOSE	75	2,025 (1,202)	10,510 (4,768)	15,755 (7,147)	4.5
EARTH, MOIST PACKED	95	2,565 (1,522)	13,312 (6,039)	19,958 (9,053)	3.5
EARTH AND GRAVEL DRY LOOSE	100	2,700 (1,602)	14,013 (6,357)	21,008 (9,530)	3.5
GARBAGE, DRY	37	999 (593)	5,185 (2,352)	7,772 (3,526)	
GARBAGE, WET	47	1,269 (753)	6,586 (2,988)	9,873 (4,479)	

MATERIAL	WEIGHT OF MATERIAL (LBS)		CAPACITY		MAXIMUM FUNCTIONAL LOAD (CU-YD) THAT DOES NOT OVERLOAD TRUCK
			LEVEL FULL 5.18 CU-YD OR 140.17 CU-FT	HEAPING FULL 7.78 CU-YD OR 210.12 CU-FT	
	PER CU-FT	PER CU-YD (KG/CUM)	LOADED WEIGHT LBS (KG)	LOADED WEIGHT LBS (KG)	
GRAVEL	110	2,970 (1,762)	15,414 (6,993)	23,107 (10,483)	3.0
GRAVEL AND SAND, DRY LOOSE	95	2,565 (1,522)	13,312 (6,039)	19,958 (9,053)	3.5
GRAVEL AND SAND, WET	120	3,240 (1,922)	16,815 (7,628)	25,207 (11,436)	3.0
LIMESTONE, CRUSHED	100	2,700 (1,602)	14,013 (6,357)	21,008 (9,530)	3.5
MUD, WET	120	3,240 (1,922)	16,815 (7,628)	25,207 (11,436)	3.0
ROCK AND STONE, CRUSHED	95	2,565 (1,522)	13,312 (6,039)	19,958 (9,053)	3.5
SALT, FINE	50	1,350 (801)	7,007 (3,179)	10,503 (4,765)	7.0
SAND, DRY LOOSE	98	2,646 (1,570)	13,733 (6,230)	20,584 (9,339)	3.5
SAND, DRY PACKED	110	2,970 (1,762)	15,414 (6,993)	23,107 (10,483)	3.0
SAND, MOIST LOOSE	120	3,240 (1,922)	16,815 (7,628)	25,207 (11,436)	3.0
SLAG, CRUSHED	75	2,025 (1,202)	10,510 (4,768)	15,755 (7,147)	4.5
SNOW, MOIST PACKED	50	1,350 (801)	7,007 (3,179)	10,503 (4,765)	7.0
STONE, CRUSHED	100	2,700 (1,602)	14,013 (6,357)	21,008 (9,530)	3.5
STONE, LOOSE	95	2,565 (1,522)	13,312 (6,039)	19,958 (9,053)	3.5

SHADED AREA = LOADED WEIGHT EXCEEDS RATED PAY LOAD

MAXIMUM FUNCTIONAL LOAD = MAXIMUM LOAD ROUNDED TO THE NEAREST HALF CUBIC YARD FOR EASE IN MEASUREMENT.

2B53F021

2-53. DATA AND INSTRUCTION PLATES (CONT)

f. M1090/M1094 (Cont).

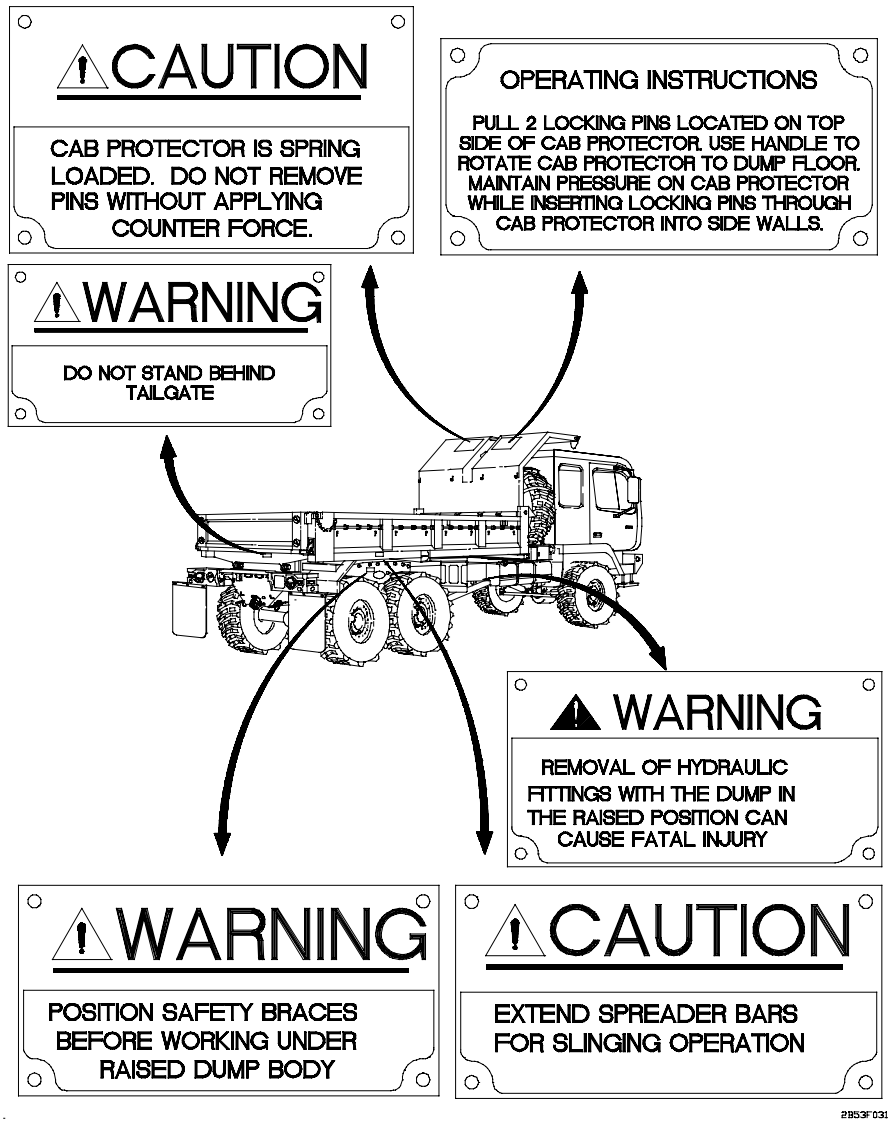

g. M1088.

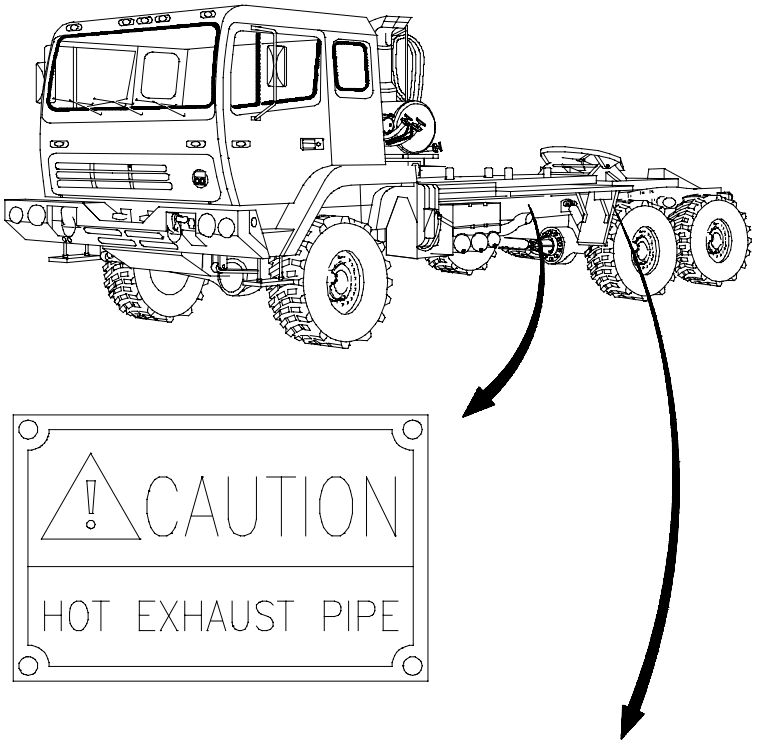

SLIDING 5TH WHEEL OPERATION

(STARTING WITH THE 5TH WHEEL IN THE FORWARD POSITION)

- SET THE TRACTOR AND TRAILER BRAKES
- PULL SLIDE LATCH RELEASE LEVER WITH RELEASE TOOL TO THE LOCKED OPEN POSITION
- RELEASE TRACTOR BRAKES (TRAILER STILL ENGAGED)
- VERY SLOWLY DRIVE TRACTOR FORWARD UNTIL 5TH WHEEL REACHES THE REAR STOP BLOCKS (TRAILER RESISTANCE WILL BE FELT)
- SET TRACTOR BRAKES
- CLOSE SLIDE LATCH RELEASE BY PUSHING LEVER DOWN WITH THE POINT OF THE RELEASE TOOL (SLIDE CARRIAGE WILL LOCK INTO PLACE AUTOMATICALLY)
- TO MOVE SLIDE CARRIAGE FORWARD, REPEAT THE ABOVE STEPS EXCEPT REVERSE THE DIRECTION OF THE TRACTOR

WARNING

DURING 5TH WHEEL SLIDE OPERATION

NEVER –

- STAND AGAINST OR BETWEEN TRACTOR TIRES
- STAND BETWEEN TRACTOR AND TRAILER
- ALLOW ANYONE BEHIND TRAILER DURING MOVEMENT
- ALLOW ANYONE TO STAND ON OPPOSITE SIDE OF OPERATOR DURING 5TH WHEEL RELEASE

ALWAYS –

- CHOCK TRAILER TIRES BEFORE COUPLING
- CONNECT TRAILER BRAKES AIR SUPPLY AND SET TRAILER BRAKES BEFORE SLIDING 5TH WHEEL
- USE RELEASE TOOL WHEN RELEASING AND ENGAGING SLIDE LATCH LEVER

2B53G011

2-53. DATA AND INSTRUCTION PLATES (CONT)

g. M1088 (Cont).

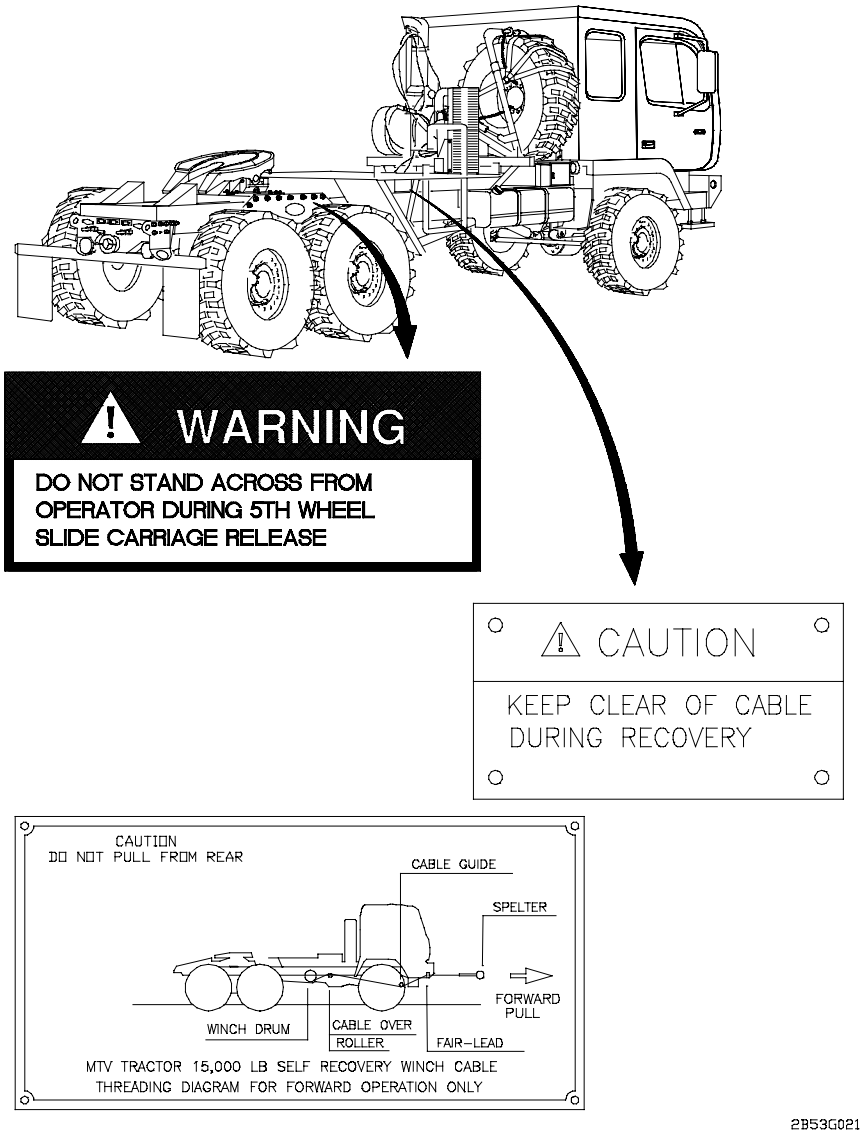

2B53G021

h. M1089.

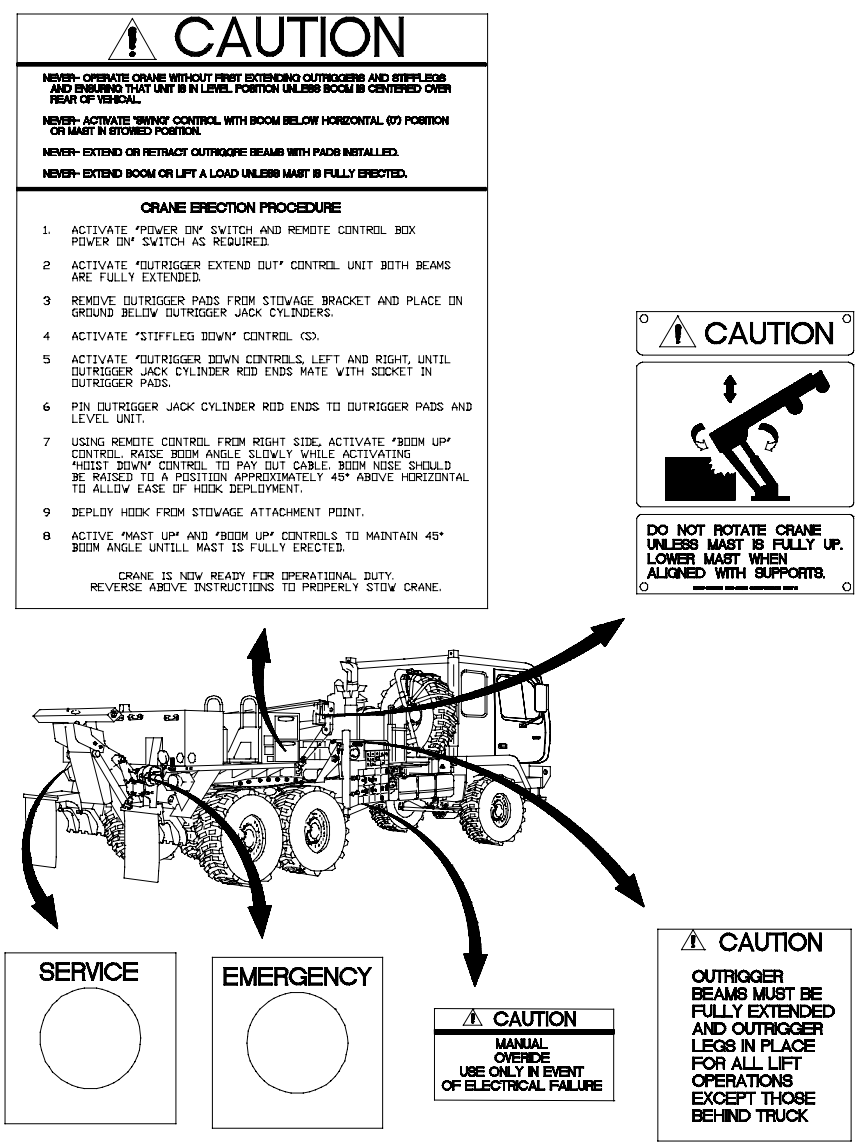
CAUTION
NEVER- OPERATE CRANE WITHOUT FIRST EXTENDING OUTRIGGERS AND STIFFLEGS AND ENSURING THAT UNIT IS IN LEVEL POSITION UNLESS BOOM IS CENTERED OVER REAR OF VEHICAL.
NEVER- ACTIVATE "SWING" CONTROL WITH BOOM BELOW HORIZONTAL (0°) POSITION OR MAST IN STOWED POSITION.
NEVER- EXTEND OR RETRACT OUTRIGGRE BEAMS WITH PADS INSTALLED.
NEVER- EXTEND BOOM OR LIFT A LOAD UNLESS MAST IS FULLY ERECTED.
CRANE ERECTION PROCEDURE
1. ACTIVATE "POWER ON" SWITCH AND REMOTE CONTROL BOX POWER ON" SWITCH AS REQUIRED.
2 ACTIVATE "OUTRIGGER EXTEND OUT" CONTROL UNIT BOTH BEAMS ARE FULLY EXTENDED.
3 REMOVE OUTRIGGER PADS FROM STOWAGE BRACKET AND PLACE ON GROUND BELOW OUTRIGGER JACK CYLINDERS.
4 ACTIVATE "STIFFLEG DOWN" CONTROL (S).
5 ACTIVATE "OUTRIGGER DOWN CONTROLS, LEFT AND RIGHT, UNTIL OUTRIGGER JACK CYLINDER ROD ENDS MATE WITH SOCKET IN OUTRIGGER PADS.
6 PIN OUTRIGGER JACK CYLINDER ROD ENDS TO OUTRIGGER PADS AND LEVEL UNIT.
7 USING REMOTE CONTROL FROM RIGHT SIDE, ACTIVATE "BOOM UP" CONTROL. RAISE BOOM ANGLE SLOWLY WHILE ACTIVATING "HOIST DOWN" CONTROL TO PAY OUT CABLE. BOOM NOSE SHOULD BE RAISED TO A POSITION APPROXIMATELY 45° ABOVE HORIZONTAL TO ALLOW EASE OF HOOK DEPLOYMENT.
9 DEPLOY HOOK FROM STOWAGE ATTACHMENT POINT.
8 ACTIVE "MAST UP" AND "BOOM UP" CONTROLS TO MAINTAIN 45° BOOM ANGLE UNTILL MAST IS FULLY ERECTED.
CRANE IS NOW READY FOR OPERATIONAL DUTY.
REVERSE ABOVE INSTRUCTIONS TO PROPERLY STOW CRANE.
CAUTION
DO NOT ROTATE CRANE UNLESS MAST IS FULLY UP. LOWER MAST WHEN ALIGNED WITH SUPPORTS.
SERVICE
EMERGENCY
CAUTION
MANUAL OVERIDE USE ONLY IN EVENT OF ELECTRICAL FAILURE
CAUTION
OUTRIGGER BEAMS MUST BE FULLY EXTENDED AND OUTRIGGER LEGS IN PLACE FOR ALL LIFT OPERATIONS EXCEPT THOSE BEHIND TRUCK
2B53H011

2-53. DATA AND INSTRUCTION PLATES (CONT)

h. M1089 (Cont).

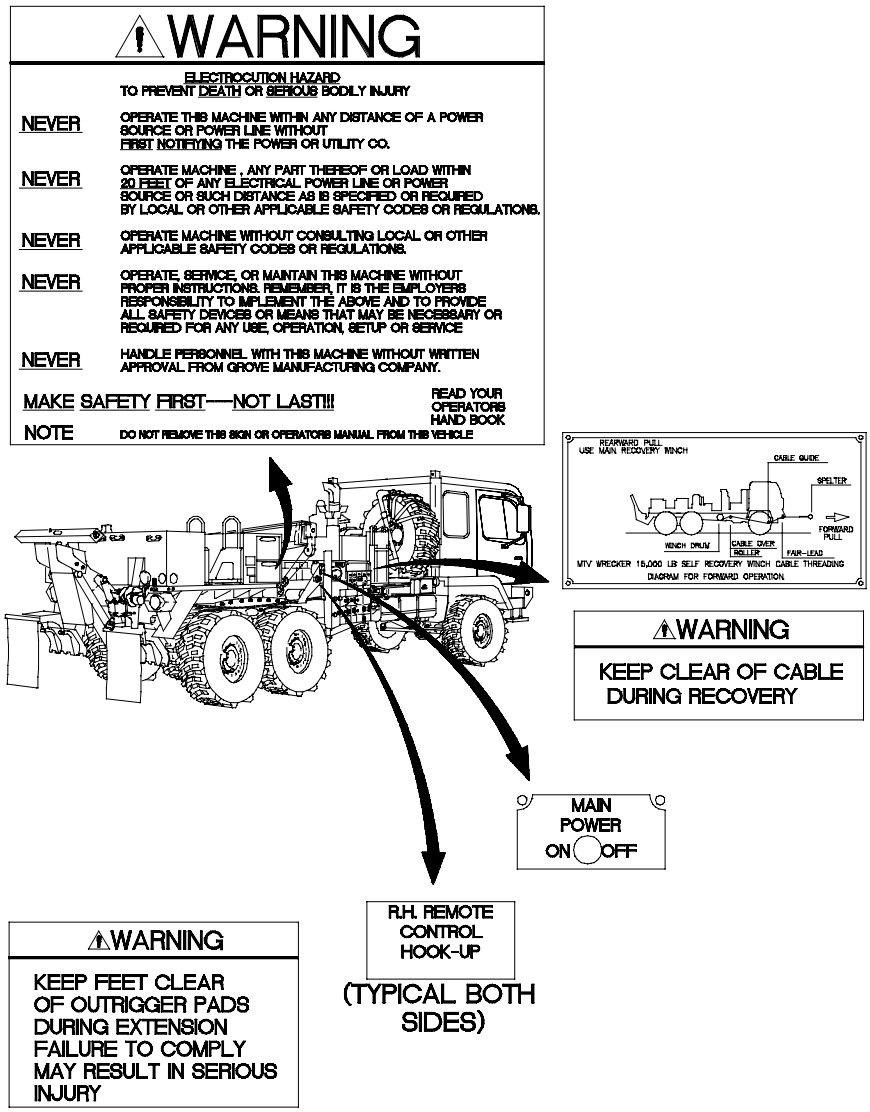

h. M1089 (Cont).

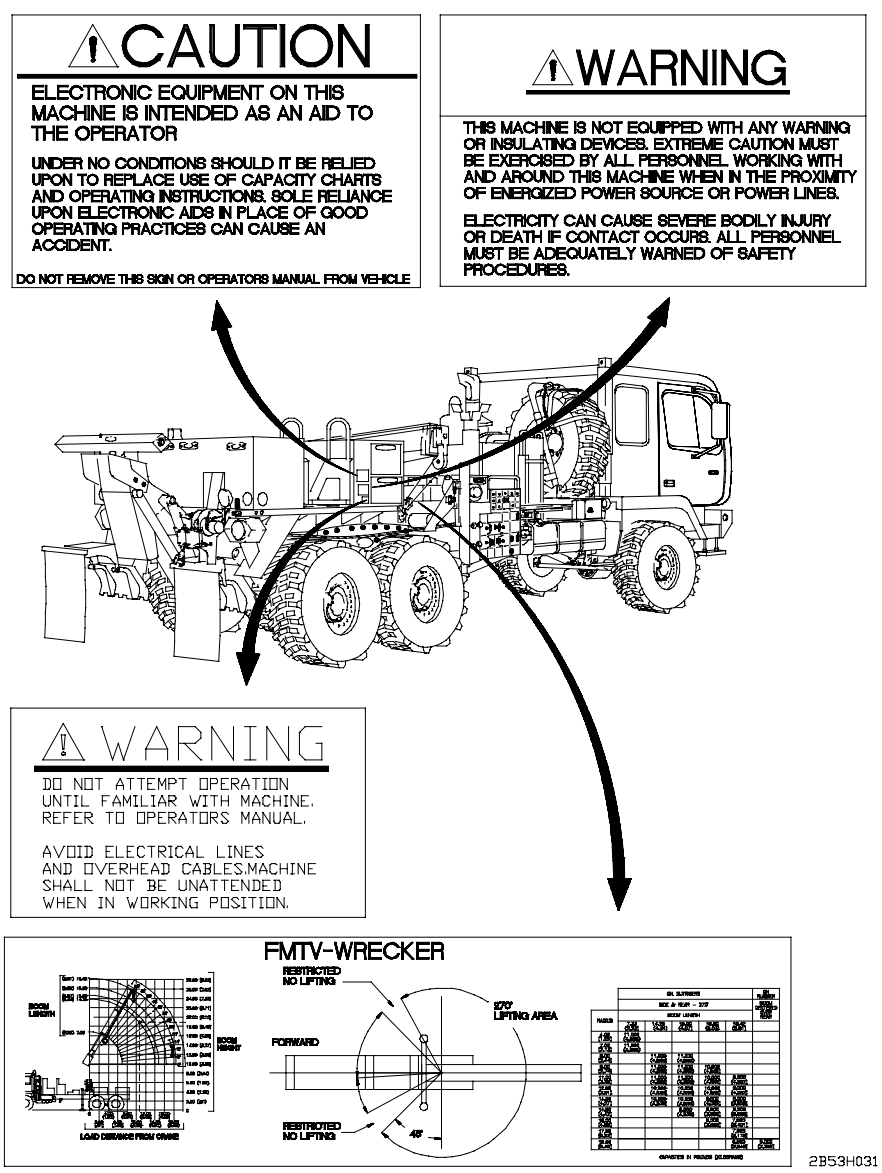
CAUTION
ELECTRONIC EQUIPMENT ON THIS MACHINE IS INTENDED AS AN AID TO THE OPERATOR
UNDER NO CONDITIONS SHOULD IT BE RELIED UPON TO REPLACE USE OF CAPACITY CHARTS AND OPERATING INSTRUCTIONS. SOLE RELIANCE UPON ELECTRONIC AIDS IN PLACE OF GOOD OPERATING PRACTICES CAN CAUSE AN ACCIDENT.
DO NOT REMOVE THIS SIGN OR OPERATORS MANUAL FROM VEHICLE
WARNING
THIS MACHINE IS NOT EQUIPPED WITH ANY WARNING OR INSULATING DEVICES. EXTREME CAUTION MUST BE EXERCISED BY ALL PERSONNEL WORKING WITH AND AROUND THIS MACHINE WHEN IN THE PROXIMITY OF ENERGIZED POWER SOURCE OR POWER LINES.
ELECTRICITY CAN CAUSE SEVERE BODILY INJURY OR DEATH IF CONTACT OCCURS. ALL PERSONNEL MUST BE ADEQUATELY WARNED OF SAFETY PROCEDURES.
WARNING
DO NOT ATTEMPT OPERATION UNTIL FAMILIAR WITH MACHINE. REFER TO OPERATORS MANUAL.
AVOID ELECTRICAL LINES AND OVERHEAD CABLES.MACHINE SHALL NOT BE UNATTENDED WHEN IN WORKING POSITION.
FMTV-WRECKER
RESTRICTED NO LIFTING
270° LIFTING AREA
FORWARD
RESTRICTED NO LIFTING
45°
BOOM LENGTH
BOOM HEIGHT
LOAD DISTANCE FROM CRANE
2B53H031

2-53. DATA AND INSTRUCTION PLATES (CONT)

h. M1089 (Cont).

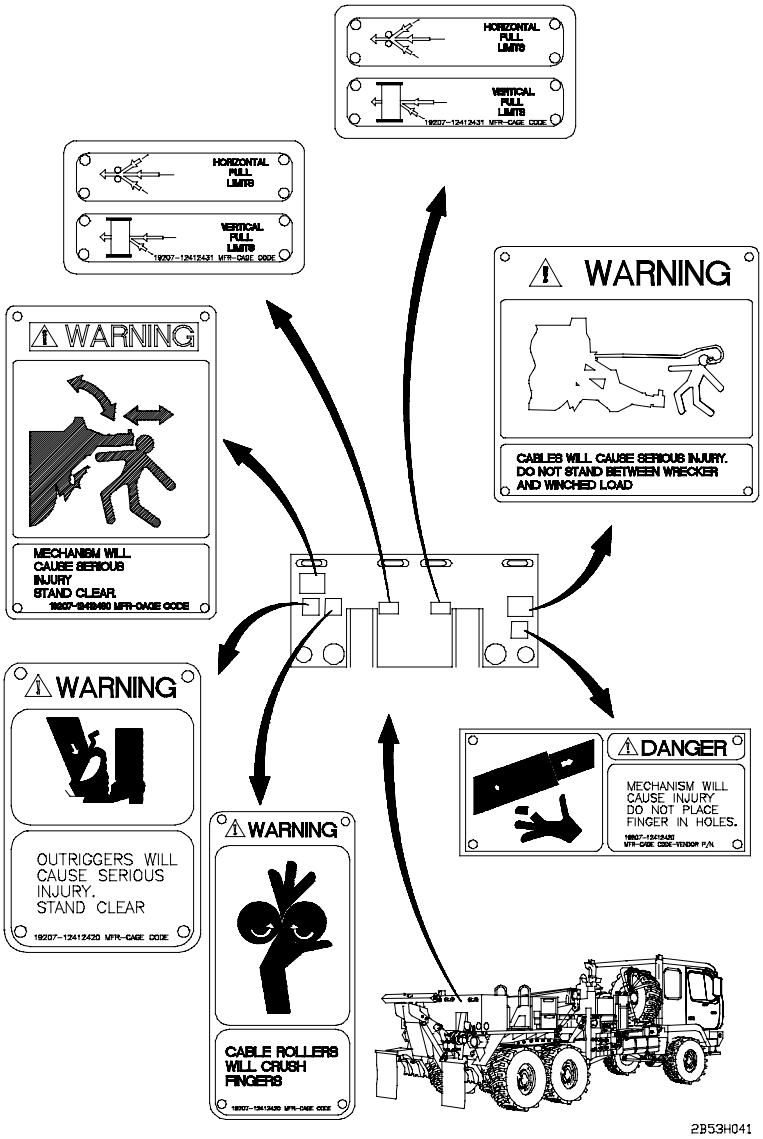

h. M1089 (Cont).

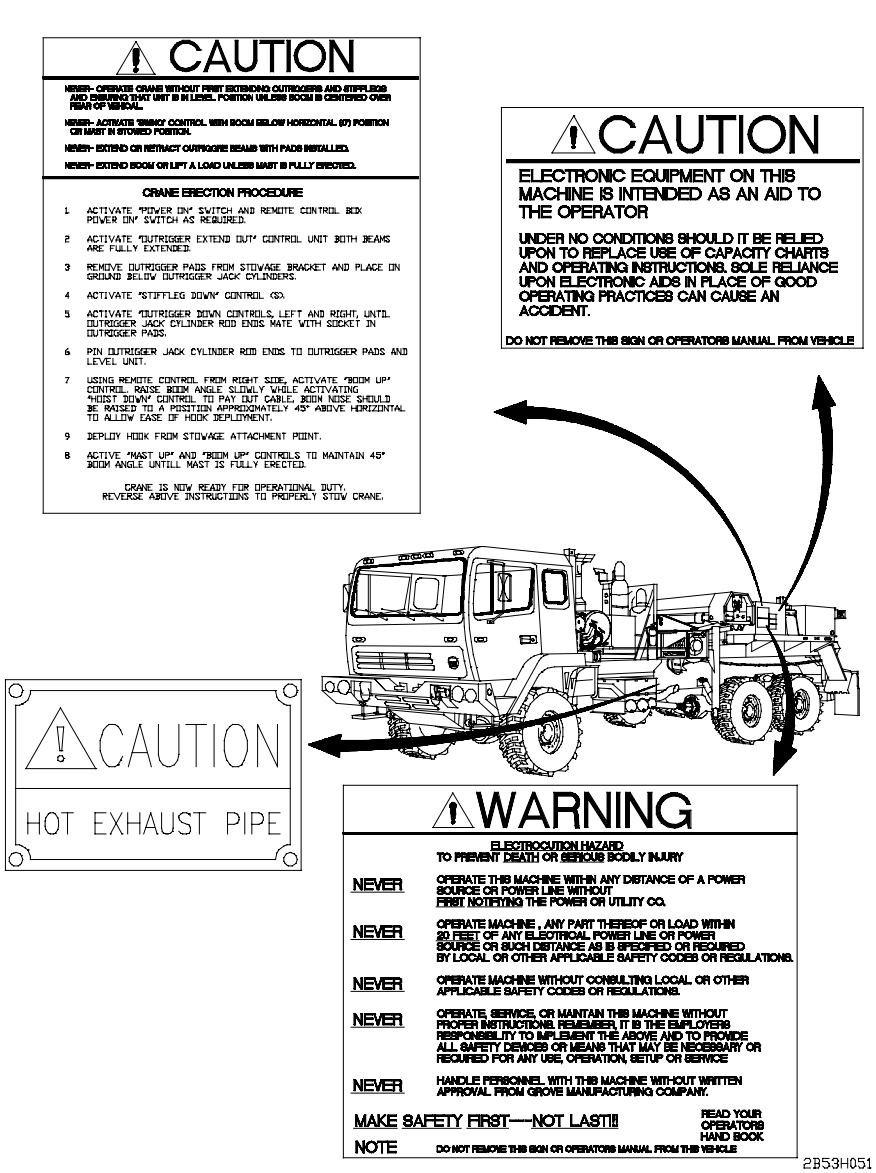
CAUTION
NEVER- OPERATE CRANE WITHOUT FIRST EXTENDING OUTRIGGERS AND STIFFLEGS AND ENSURING THAT UNIT IS IN LEVEL. POSITION UNLESS BOOM IS CENTERED OVER REAR OF VEHICAL.
NEVER- ACTIVATE "BRAKY" CONTROL WHN BOOM BELOW HORIZONTAL. (07) POSITION OR MAST IN STOWED POSITION.
NEVER- EXTEND OR RETRACT OUTRIGGRE BEAMS WITH PADS INSTALLED.
NEVER- EXTEND BOOM OR LIFT A LOAD UNLESS MAST IS FULLY ERECTED.
CRANE ERECTION PROCEDURE
1 ACTIVATE "POWER ON" SWITCH AND REMOTE CONTROL BOX POWER ON" SWITCH AS REQUIRED.
2 ACTIVATE "OUTRIGGER EXTEND OUT" CONTROL UNIT BOTH BEAMS ARE FULLY EXTENDED.
3 REMOVE OUTRIGGER PADS FROM STOWAGE BRACKET AND PLACE ON GROUND BELOW OUTRIGGER JACK CYLINDERS.
4 ACTIVATE "STIFFLEG DOWN" CONTROL (S).
5 ACTIVATE "OUTRIGGER DOWN CONTROLS, LEFT AND RIGHT, UNTIL OUTRIGGER JACK CYLINDER ROD ENDS MATE WITH SOCKET IN OUTRIGGER PADS.
6 PIN OUTRIGGER JACK CYLINDER ROD ENDS TO OUTRIGGER PADS AND LEVEL UNIT.
7 USING REMOTE CONTROL FROM RIGHT SIDE, ACTIVATE "BOOM UP" CONTROL RAISE BOOM ANGLE SLOWLY WHILE ACTIVATING "HOIST DOWN" CONTROL TO PAY OUT CABLE. BOOM NOSE SHOULD BE RAISED TO A POSITION APPROXIMATELY 45° ABOVE HORIZONTAL TO ALLOW EASE OF HOOK DEPLOYMENT.
9 DEPLOY HOOK FROM STOWAGE ATTACHMENT POINT.
8 ACTIVE "MAST UP" AND "BOOM UP" CONTROLS TO MAINTAIN 45° BOOM ANGLE UNTILL MAST IS FULLY ERECTED.
CRANE IS NOW READY FOR OPERATIONAL DUTY.
REVERSE ABOVE INSTRUCTIONS TO PROPERLY STOW CRANE.
CAUTION
ELECTRONIC EQUIPMENT ON THIS MACHINE IS INTENDED AS AN AID TO THE OPERATOR
UNDER NO CONDITIONS SHOULD IT BE RELIED UPON TO REPLACE USE OF CAPACITY CHARTS AND OPERATING INSTRUCTIONS. SOLE RELIANCE UPON ELECTRONIC AIDS IN PLACE OF GOOD OPERATING PRACTICES CAN CAUSE AN ACCIDENT.
DO NOT REMOVE THIS SIGN OR OPERATORS MANUAL FROM VEHICLE
CAUTION
HOT EXHAUST PIPE
WARNING
ELECTROCUTION HAZARD
TO PREVENT DEATH OR SERIOUS BODILY INJURY
NEVER OPERATE THIS MACHINE WITHIN ANY DISTANCE OF A POWER SOURCE OR POWER LINE WITHOUT FIRST NOTIFYING THE POWER OR UTILITY CO.
NEVER OPERATE MACHINE , ANY PART THEREOF OR LOAD WITHIN 20 FEET OF ANY ELECTRICAL POWER LINE OR POWER SOURCE OR SUCH DISTANCE AS IS SPECIFIED OR REQUIRED BY LOCAL OR OTHER APPLICABLE SAFETY CODES OR REGULATIONS.
NEVER OPERATE MACHINE WITHOUT CONSULTING LOCAL OR OTHER APPLICABLE SAFETY CODES OR REGULATIONS.
NEVER OPERATE, SERVICE, OR MAINTAIN THIS MACHINE WITHOUT PROPER INSTRUCTIONS. REMEMBER, IT IS THE EMPLOYERS RESPONSIBILITY TO IMPLEMENT THE ABOVE AND TO PROVIDE ALL SAFETY DEVICES OR MEANS THAT MAY BE NECESSARY OR REQUIRED FOR ANY USE, OPERATION, SETUP OR SERVICE
NEVER HANDLE PERSONNEL WITH THIS MACHINE WITHOUT WRITTEN APPROVAL FROM GROVE MANUFACTURING COMPANY.
MAKE SAFETY FIRST---NOT LAST!!
READ YOUR OPERATORS HAND BOOK
NOTE DO NOT REMOVE THIS SIGN OR OPERATORS MANUAL FROM THIS VEHICLE
2B53H051

2-53. DATA AND INSTRUCTION PLATES (CONT)

h. M1089 (Cont).

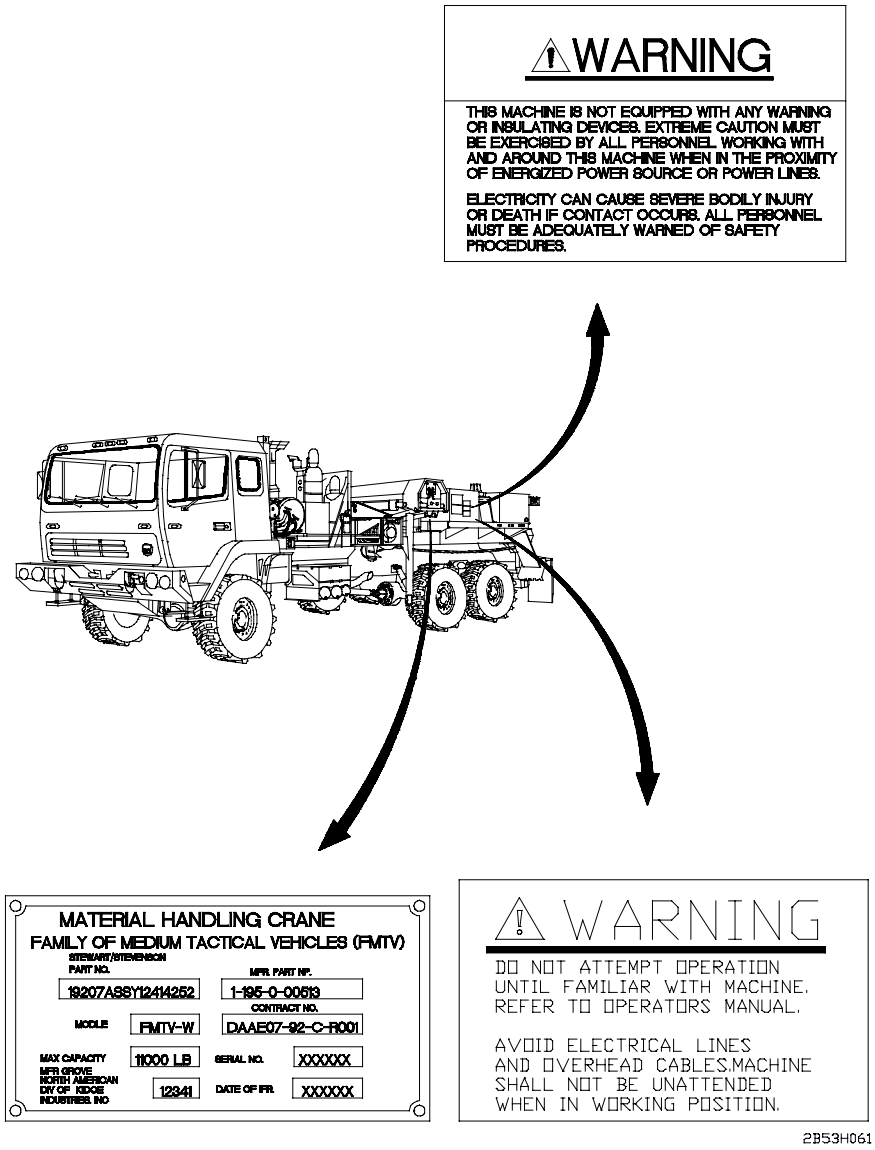

h. M1089 (Cont).

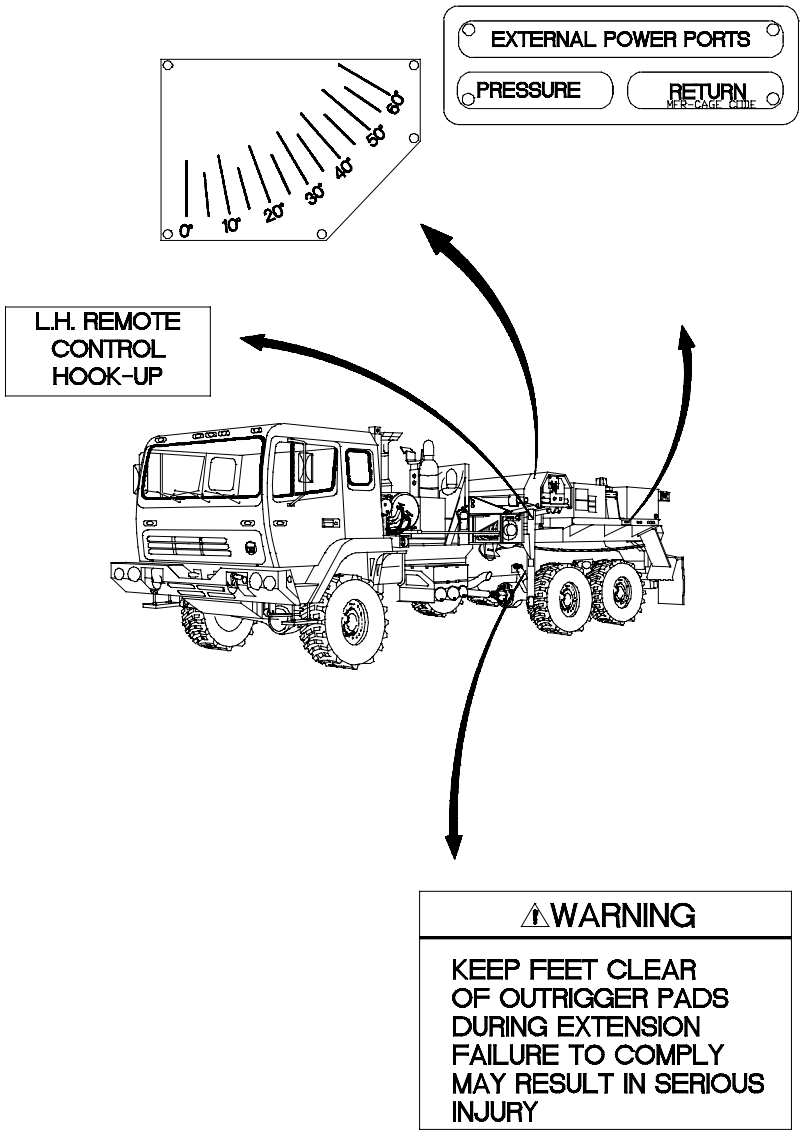
EXTERNAL POWER PORTS
PRESSURE
RETURN
MFR-CAGE CODE
0°
10°
20°
30°
40°
50°
60°
L.H. REMOTE CONTROL HOOK-UP
WARNING
KEEP FEET CLEAR OF OUTRIGGER PADS DURING EXTENSION FAILURE TO COMPLY MAY RESULT IN SERIOUS INJURY
2B53H071

2-53. DATA AND INSTRUCTION PLATES (CONT)

j. M1084/M1086.

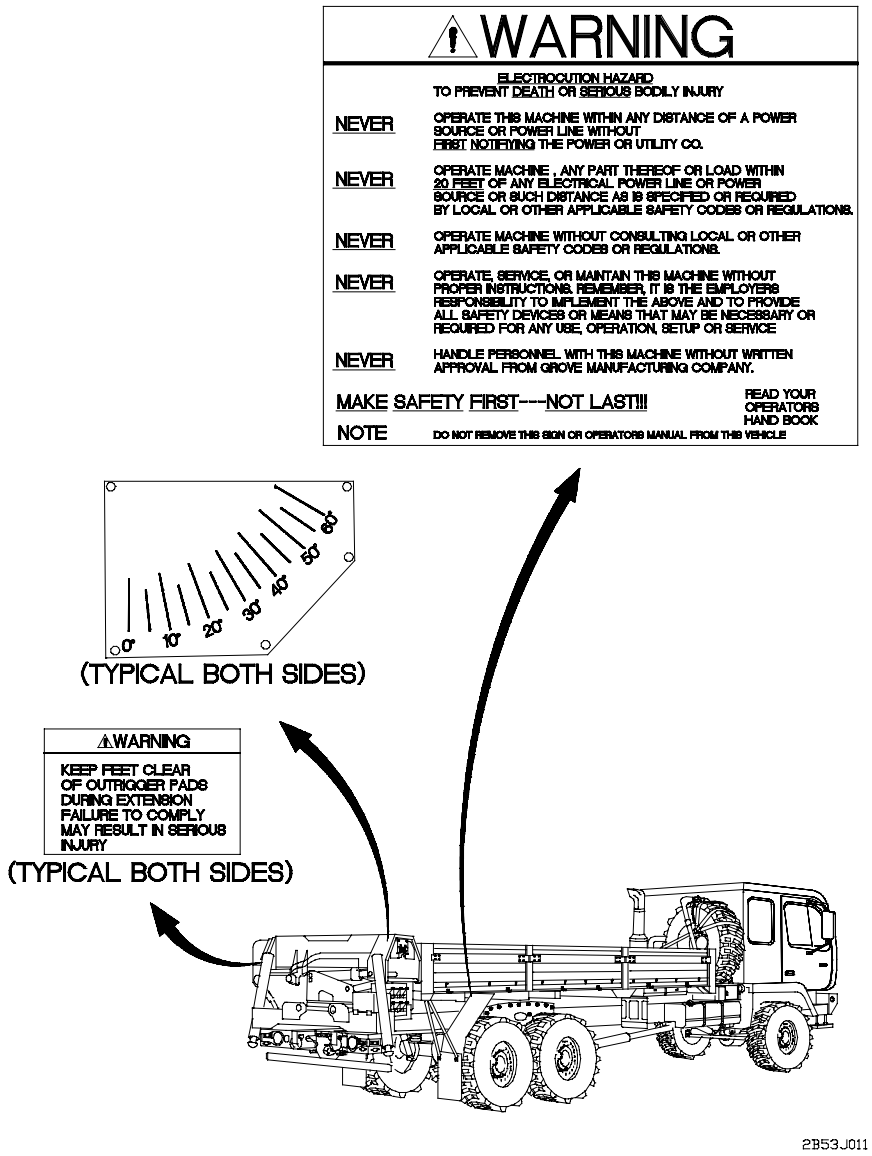

j. M1084/M1086 (Cont).

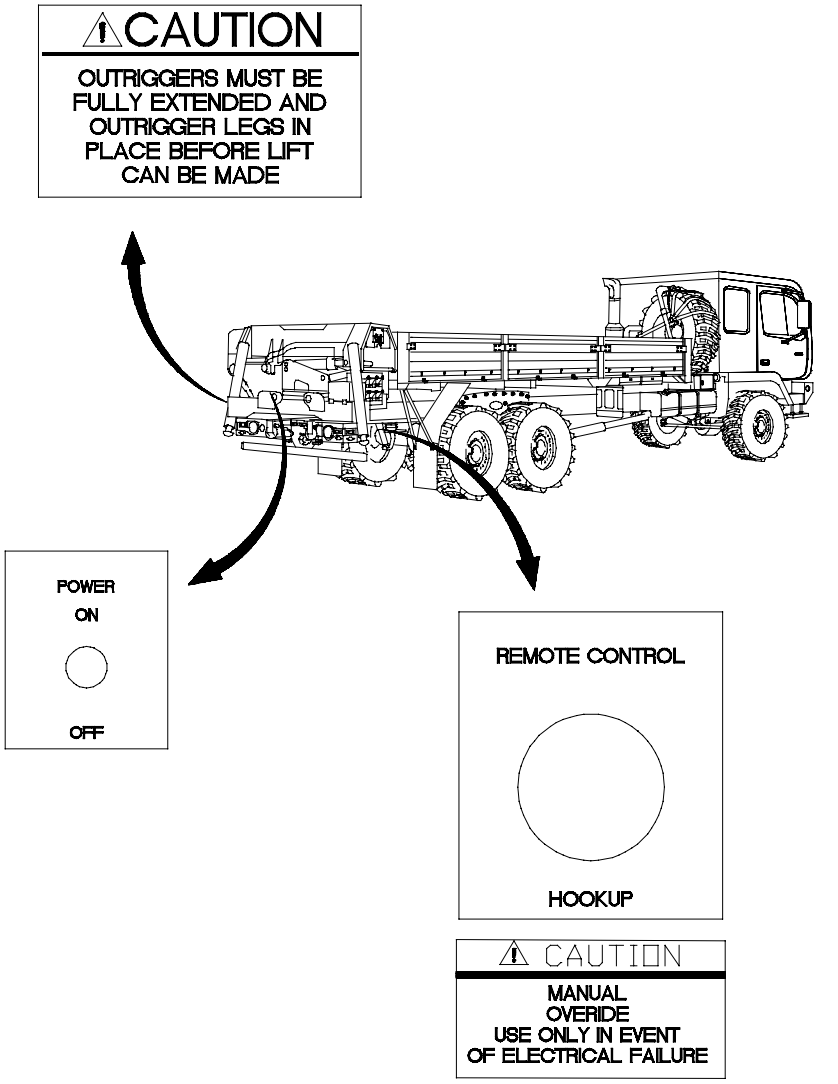

2B53J021

2-53. DATA AND INSTRUCTION PLATES (CONT)

j. M1084/M1086 (Cont).

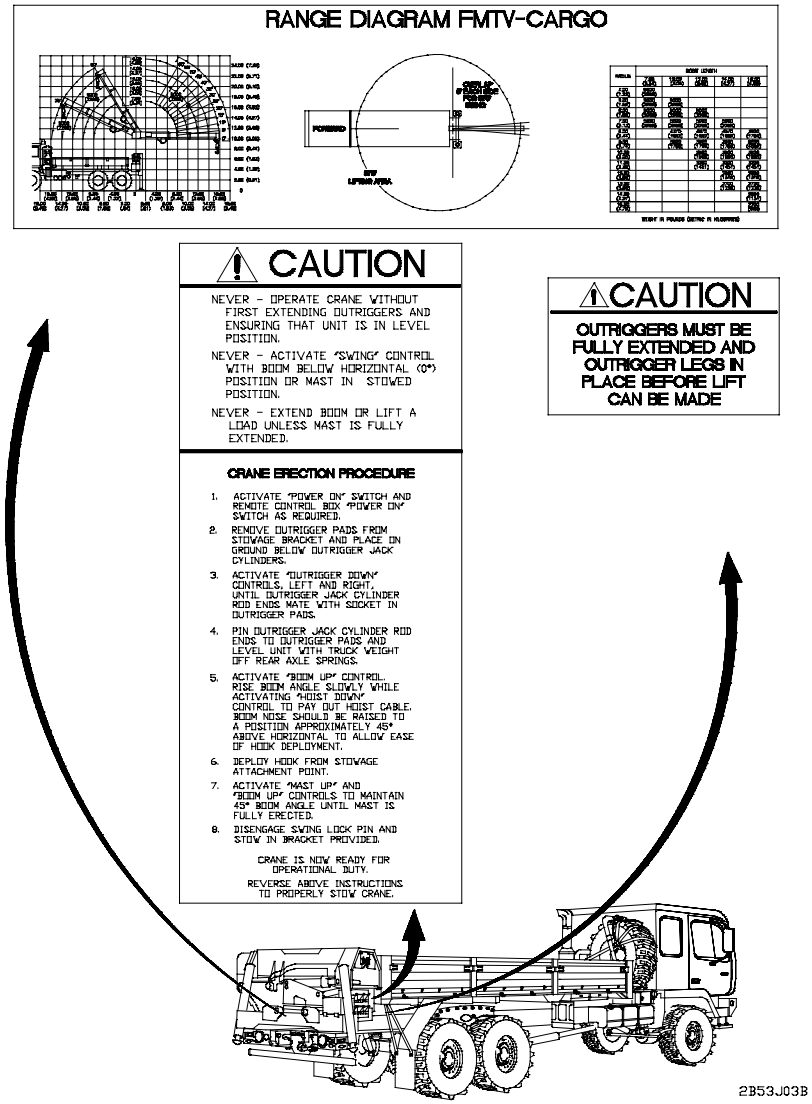

j. M1084/M1086 (Cont).

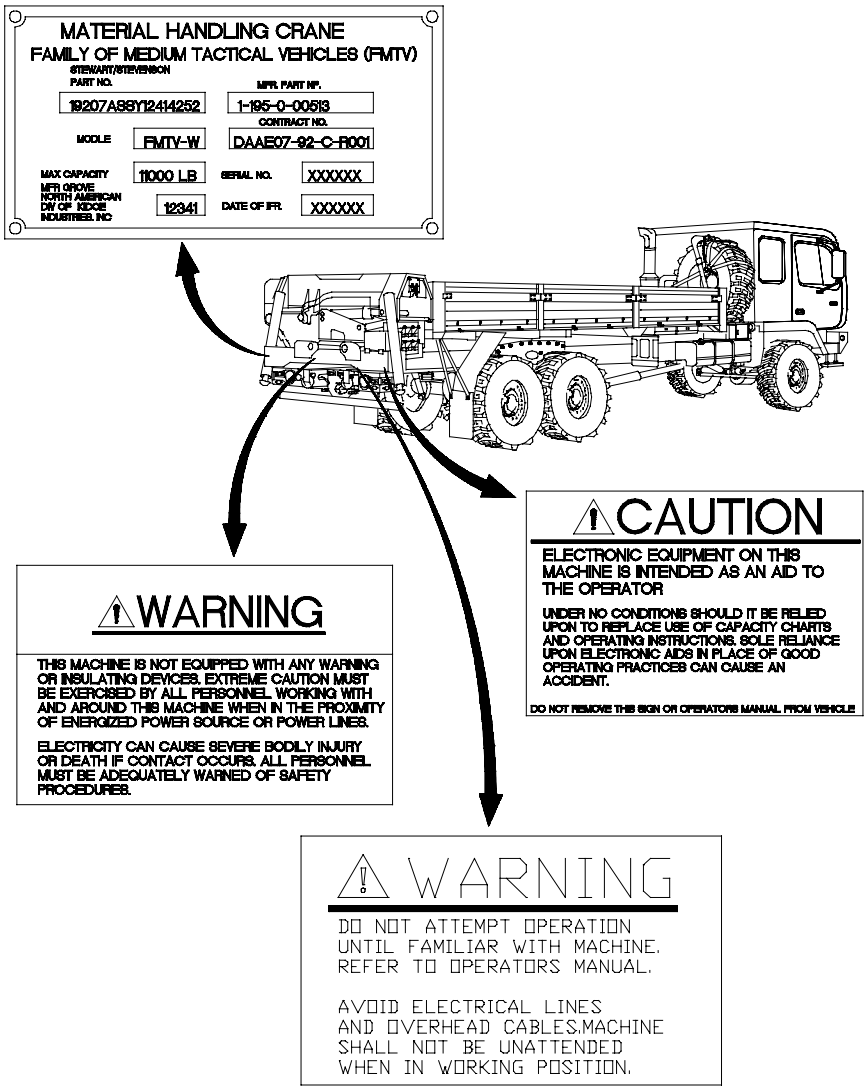

Section IV. OPERATION UNDER UNUSUAL CONDITIONS

This section provides instructions to operate the MTV and its auxiliary equipment under extreme and unusual conditions. Special operating instructions are provided for these conditions.

2-54. OPERATION IN EXTREME HEAT

WARNING

When required to remain inside the vehicle during extreme heat, occupants should follow the water intake, work/rest cycle, and other heat stress preventive medicine measures contained in FM 31-70, Basic Cold Weather Manual. Failure to comply may result in serious injury or death to personnel.

CAUTION

- When operating in temperatures above 100° F (38° C), extra care must be taken to prevent overheating the engine. Watch WATER TEMP gage, STOP indicator, and engine coolant temperature indicator closely. Failure to comply may result in damage to equipment.

- Check oil levels often and keep operating strain as low as possible. Vehicle cooling and lubrications systems support each other. Failure of one system will rapidly cause failure of the other system. Failure to comply may result in damage to equipment.

- Idle engine to cool down. Idling cools engine faster than quick shutdown and may prevent damage to engine from excessive heat. Failure to comply may result in damage to equipment.

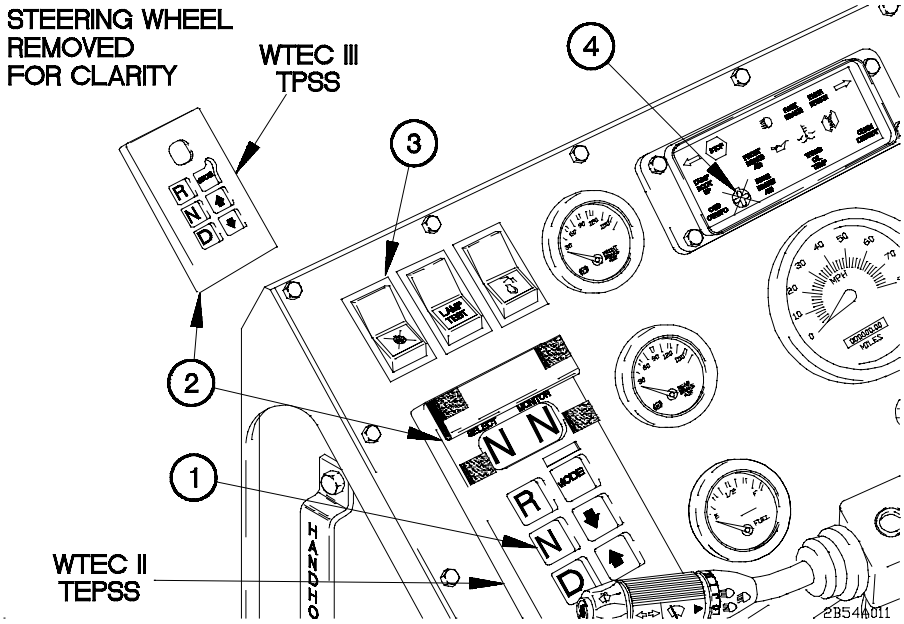

CAUTION

Use low gear ranges only when necessary. Failure to comply may result in damage to equipment.

a. Push N (Neutral) select button (1) on WTEC II TEPSS (2) or WTEC III TPSS (2) while engine is running. Idle engine for approximately two minutes before engine shutdown.

CAUTION

- Do not operate vehicle with radiator fan off switch in the on position. Ensure fan off indicator is not illuminated. Failure to comply may result in damage to equipment.

- Placing the radiator fan off switch in the on position will cause the fan not to operate. Failure to comply may result in damage to equipment.

b. Check that radiator fan off switch (3) is in the off position and the fan off indicator (4) is not illuminated.

2-54. OPERATION IN EXTREME HEAT (CONT)

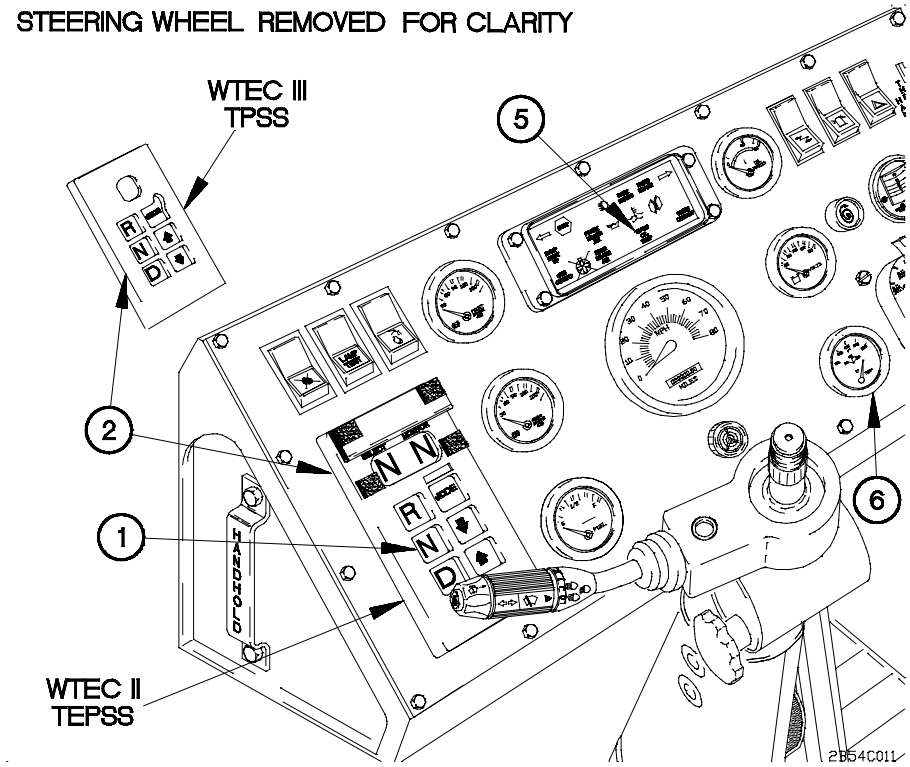

CAUTION

Never operate engine for more than 30 seconds at full throttle while vehicle is not moving. Transmission oil temperature will become too hot. Failure to comply may result in damage to equipment.

c. If the TRANS OIL TEMP indicator (5) illuminates and WATER TEMP gage (6) reads near 230° F (110° C), transmission oil is overheating:

(1) Stop vehicle.

(2) Press the N (Neutral) select button (1) on WTEC II TEPSS (2) or WTEC III TPSS (2).

(3) Allow engine to operate at idle (750 rpm) for three minutes.

(4) Continue normal vehicle operation when TRANS OIL TEMP indicator (5) goes out.

(5) Shut down engine (para 2-27f) and notify Unit Maintenance if TRANS OIL TEMP indicator (5) does not go out.

d. Check cooling system often for the following conditions:

(1) Low coolant level in radiator overflow tank (para 2-18, item 3).

(2) Cracked or leaking radiator hoses (para 2-18, item 62).

(3) Radiator fins clogged with dust, leaves, or insects.

NOTE

Batteries do not hold charge well in extreme heat. Batteries will be tagged for use in tropical conditions or extreme heat. Batteries will have a white circle or dot painted on top. Battery electrolyte must be changed to adjust for such conditions. Refer to TM 9-6140-200-14 for procedures.

e. Check battery electrolyte level daily (para 3-8b).

f. In hot, damp climates check body and chassis often. Notify Unit Maintenance if any of the following conditions are found:

(1) Signs of pitting or paint blistering on metal surfaces.

(2) Signs of mildew, mold, or fungus on fabrics and rubber.

2-55. OPERATION IN EXTREME DUST

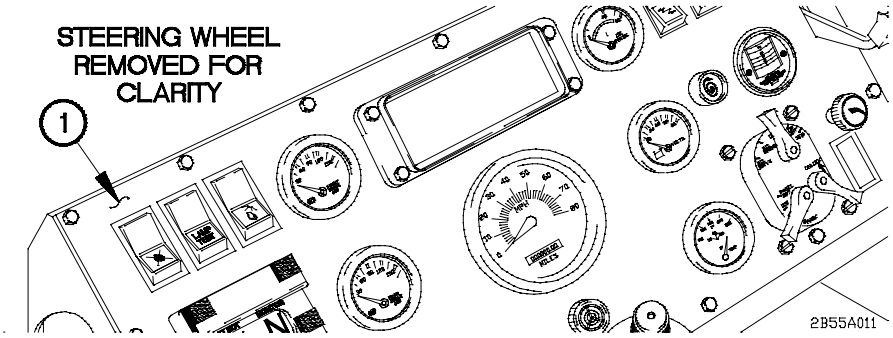

CAUTION

Check AIR FILTER RESTRICTION GAUGE often. Shut down engine immediately (para 2-27f) when yellow diaphragm enters red zone (greater then 25 psi) (172 kPa). Failure to comply may result in damage to equipment.

a. Service air filter (para 3-9). Check other gages and indicator lights on instrument panel (1) to be sure dust does not affect other equipment.

2-55. OPERATION IN EXTREME DUST (CONT)

b. Allow as much distance as possible between vehicles and operate at low speeds.

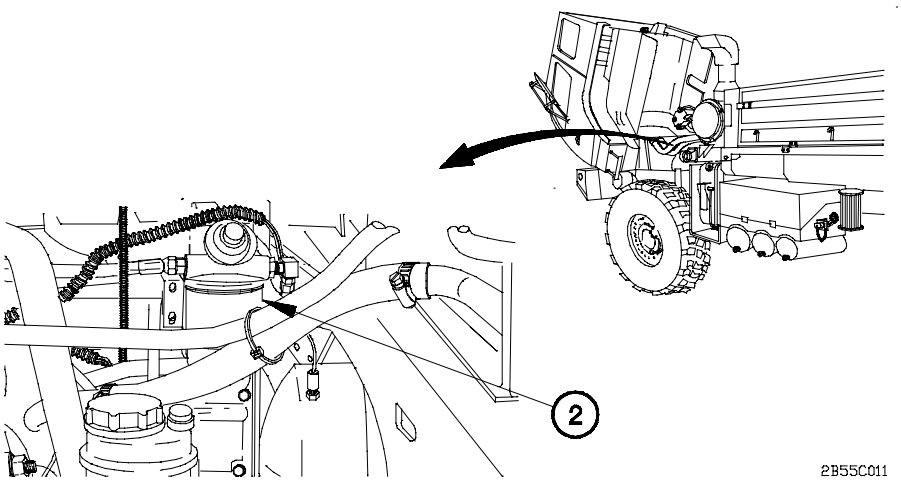

c. Check and drain fuel/water separator (2) at stops (para 2-18, item 32).

d. Park vehicle so that front of vehicle does not face into wind, when possible.

e. Cover air intake, radiator, and cab with tarp during extended shutdown.

CAUTION

Keep glass surfaces covered with tarp as much as possible in blowing dust conditions. Failure to comply may result in scratched glass surfaces.

f. Cover glass surfaces when not needed for operation. Take extra care when cleaning glass to prevent scratching surfaces.

CAUTION

Do not direct high-pressure water stream at glass surfaces, seals, air intake, exhaust outlet, or any other component of vehicle that could be easily damaged by high-pressure water stream. Failure to comply may result in damage to equipment.

g. Clean dust from wheels, axles, universal joints, steering mechanism, and radiator as soon as possible.

2-56. OPERATION IN FOREST OR ON ROCKY TERRAIN

WARNING

Avoid driving diagonally across a hill. Vehicle could roll over. Failure to comply may result in serious injury or death to personnel or damage to equipment.

CAUTION

- Ensure vehicle has enough clearance before driving over rough terrain. Rough terrain can damage components under vehicle. Failure to comply may result in damage to equipment.
- Ensure vehicle can clear overhanging tree limbs. Failure to comply may result in damage to equipment.
- Ensure that mirrors will not be damaged by rocks or trees by adjusting mirrors to keep rear of vehicle visible. Failure to comply may result in damage to equipment.

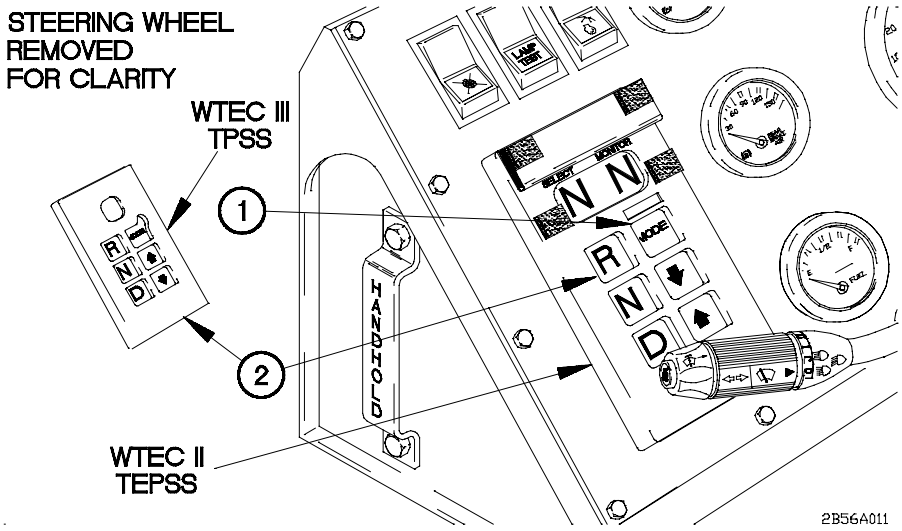

Push MODE select button (1) on WTEC II TEPSS (2) or WTEC III TPSS (2) to select desired transmission gear.

2-57. OPERATION IN SAND OR MUD

CAUTION

- Keep glass surfaces covered with a tarp during blowing sand conditions. Use care when cleaning to prevent scratching glass surfaces. Failure to comply may result in scratched glass surfaces.

- Check AIR FILTER RESTRICTION gauge often. If yellow diaphragm enters red zone, shut down engine immediately (para 2-27f) and service air filter (para 3-9). Failure to comply may result in damage to equipment.

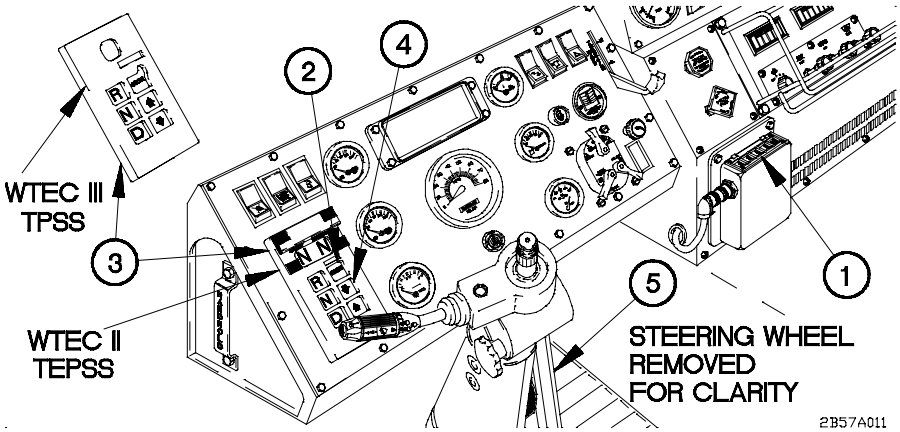

a. Press CTIS mode to SAND (1).

WARNING

Operating in water or mud causes brake linings to get wet and can impair vehicle braking. Dry brakes by driving vehicle about 500 ft (153 m) while applying service brakes often. If adequate braking is not restored by drying brakes, notify Unit Maintenance. Failure to comply may result in injury to personnel or damage to equipment.

b. Push MODE select button (2) on WTEC II TEPSS (3) or WTEC III TPSS (3) to select desired transmission gear.

c. Accelerate slowly so tires do not spin and dig in sand or mud.

d. Press lower gear range button (4) on WTEC II TEPSS (3) or WTEC III TPSS (3).

e. Keep accelerator pedal (5) steady after vehicle reaches desired speed.

f. Turn vehicle slowly when in loose sand or mud.

WARNING

- **Do not straddle or drive on sides of sand mounds. Loose sand will not support vehicle on steep slopes.**
- **Avoid driving diagonally across a hill. Vehicle may roll over. Failure to comply may result in serious injury or death to personnel or damage to equipment.**

g. Steer vehicle straight up and down hills when possible. When driving across a hill is necessary, choose the lowest angle possible, keep vehicle moving, and avoid quick, sharp turns.

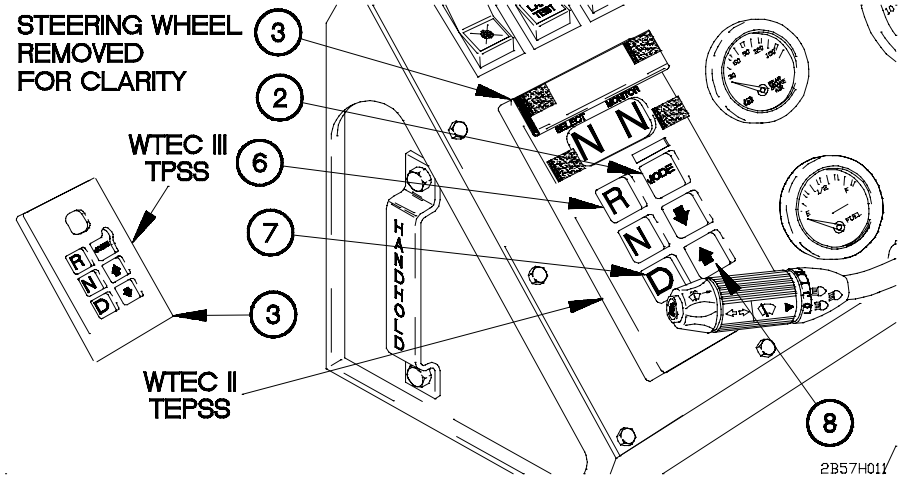

h. To move vehicle forward and turn after vehicle is stopped in loose sand or mud:

(1) Press MODE (2) on WTEC II TEPSS (3) or WTEC III TPSS (3).

(2) Press R (Reverse) select button (6) on WTEC II TEPSS (3) or WTEC III TPSS (3).

(3) Move vehicle straight back approximately 20 ft (6 m).

(4) Stop vehicle.

(5) Press D (Drive) select button (7) on WTEC II TEPSS (3) or WTEC III TPSS (3).

(6) Press higher gear select button (8) on WTEC II TEPSS (3) or WTEC III TPSS (3).

(7) Move vehicle forward.

(8) Gradually turn vehicle as speed is obtained and vehicle is moving forward smoothly.

2-57. OPERATION IN SAND OR MUD (CONT)

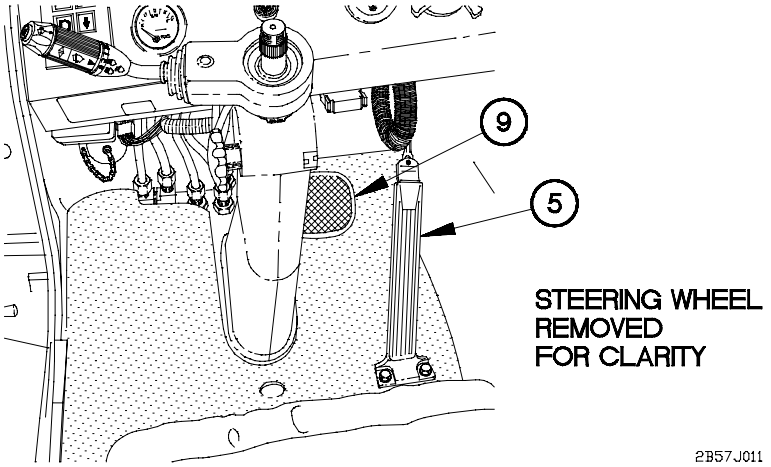

j. If vehicle starts to skid:

(1) Release accelerator pedal (5).

(2) Steer in direction of skid until vehicle stops skidding.

(3) Press brake pedal (9) lightly when vehicle is under control.

(4) Press accelerator pedal (5) slowly and steer vehicle on straight course.

k. To park vehicle:

(1) Park vehicle so it does not face into the wind whenever possible.

(2) Clean mud off vehicle as soon as possible (para 3-7).

CAUTION

Do not direct high-pressure water stream at glass surfaces, seals, air intake, exhaust outlet, or any other component of vehicle that could be easily damaged by high-pressure water stream. Failure to comply may result in damage to equipment.

(3) Clean mud from wheels, brakes, axles, universal joints, steering mechanism, radiator and transmission auxiliary oil cooler as soon as possible (para 3-7).

2-58. OPERATION IN DESERT ENVIRONMENT

NOTE

FM 90-3 contains detailed instructions for living in desert environment.

a. Principles of operation in extreme heat, extreme dust, and in sand or mud (para 2-54, 2-55, and 2-57) apply to desert environment operation.

b. Temperatures can change as much as 70° F (21° C) between day and night. These changes can damage equipment if vehicle is not properly prepared.

c. Due to expansion and contraction of fluids and air, care should be taken when filling fuel tanks and fluid reservoirs to prevent overflow when temperatures change.

2-59. FIRE EXTINGUISHER OPERATION

a. Fire Extinguisher Removal (All Models).

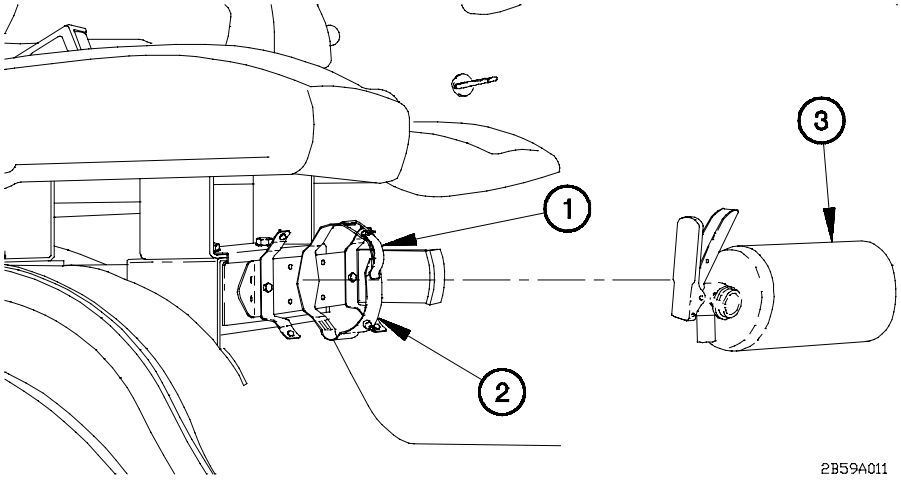

(1) Pull up on latch (1) to open clamp (2).

(2) Remove fire extinguisher (3) from clamp (2).

2-59. FIRE EXTINGUISHER OPERATION (CONT)

b. Fire Extinguisher Operation (All Models).

(1) Remove safety pin (1) from fire extinguisher (2).

(2) Holding fire extinguisher (2) upright, point nozzle (3) at base of fire from approximately 8 ft (2.4 m).

(3) Squeeze together handle (4) and lever (5).

(4) Spray discharge in a side-to-side motion at base of fire.

(5) Release handle (4) and lever (5) when fire is out.

(6) Install safety pin (1) in fire extinguisher (2).

(7) Notify Unit Maintenance to replace fire extinguisher (2).

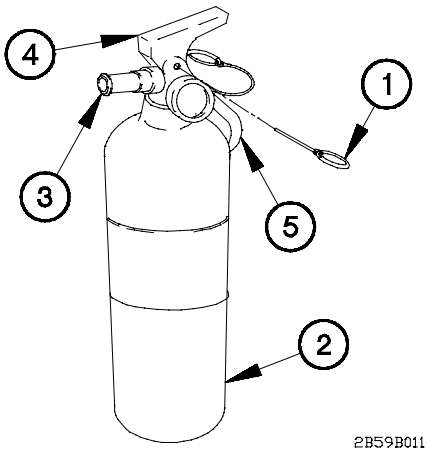

c. Fire Extinguisher Installation (All Models).

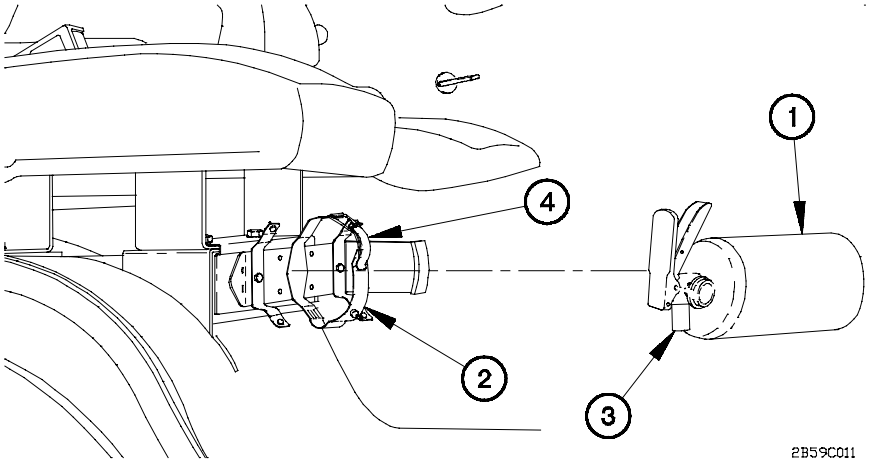

(1) Install fire extinguisher (1) in clamp (2) with nozzle (3) pointing down.

(2) Push down on latch (4) to secure fire extinguisher (1) in clamp (2).

d. Fire Extinguisher Removal (M1089).

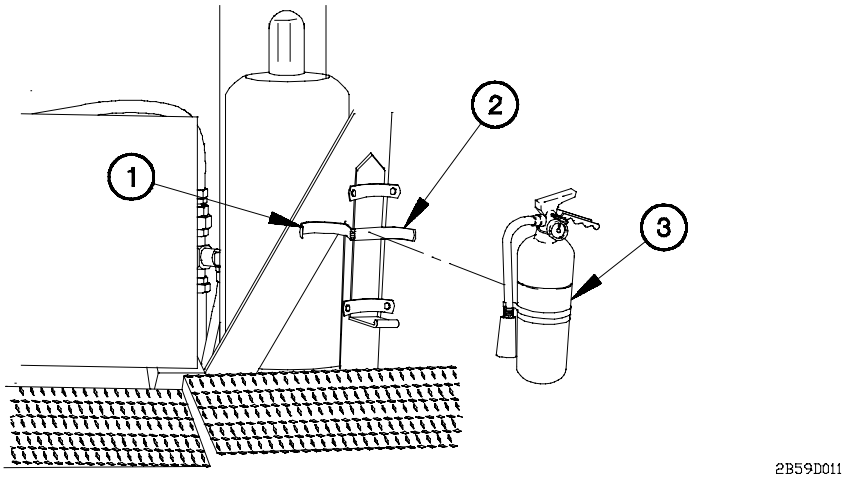

(1) Pull up on latch (1) to open clamp (2).

(2) Remove fire extinguisher (3) from clamp (2).

e. Fire Extinguisher Operation (M1089).

(1) Remove safety pin (1) from fire extinguisher (2).

(2) Holding fire extinguisher (2) upright, point nozzle (3) at base of fire from approximately 8 ft (2.4 m).

(3) Squeeze together handle (4) and lever (5).

(4) Spray discharge in a side-to-side motion at base of fire.

(5) Release handle (4) and lever (5) when fire is out.

(6) Install safety pin (1) in fire extinguisher (2).

(7) Notify Unit Maintenance to replace fire extinguisher (2).

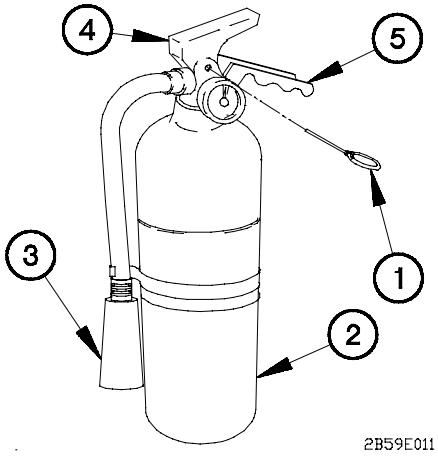

2-59. FIRE EXTINGUISHER OPERATION (CONT)

f. Fire Extinguisher Installation (M1089).

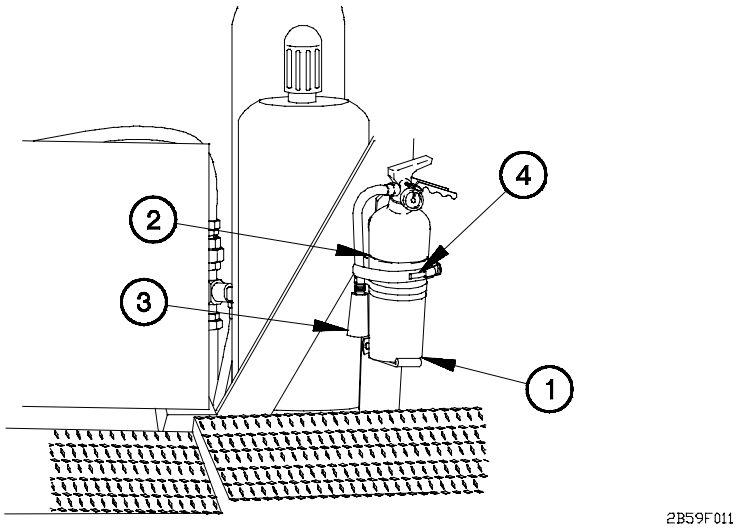

(1) Install fire extinguisher (1) in clamp (2) with nozzle (3) pointing down.

(2) Push down on latch (4) to secure fire extinguisher (1) in clamp (2).

2-60. HIGHWAY EMERGENCY MARKER KIT SETUP

a. Preparing markers for use:

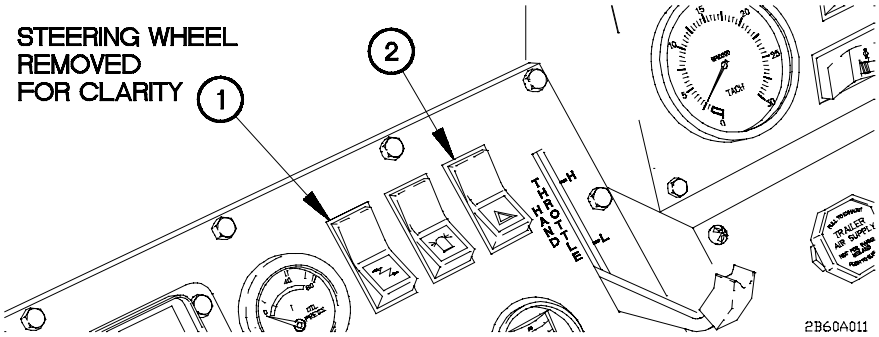

(1) Position master power switch (1) to on.

(2) Position hazard lights switch (2) to on.

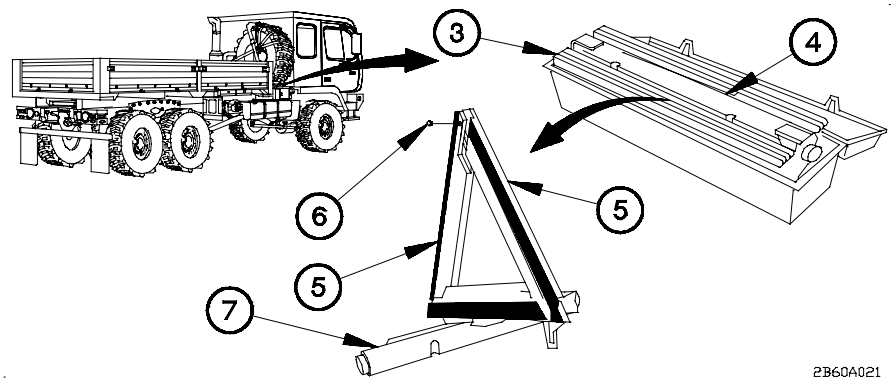

(3) Remove emergency marker kit (3) from TOOL KIT.

(4) Remove three markers (4) from emergency marker kit (3).

(5) Attach two ends of marker arms (5) with pin (6).

(6) Rotate marker (5) approximately 1/4 turn on base (7).

(7) Perform steps (4) through (6) for second and third markers.

b. Placing markers on undivided, straight highway:

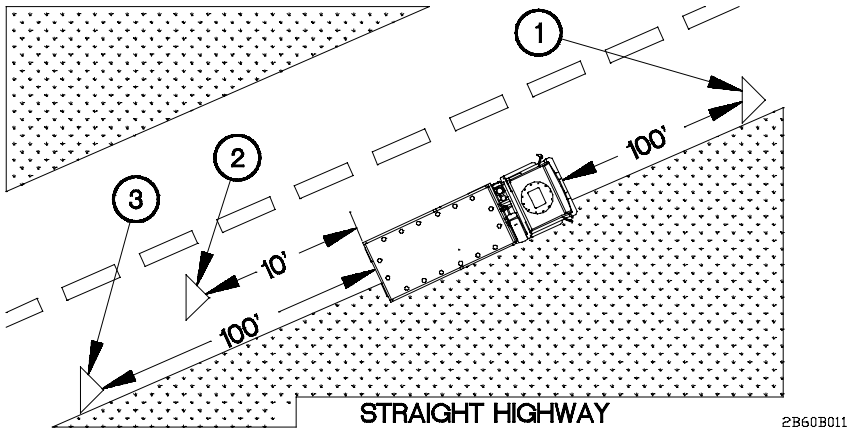

(1) Place one marker (1) approximately 100 ft (30 m) in front of vehicle with marker facing approaching traffic.

(2) Place second marker (2) approximately 10 ft (3 m) behind vehicle and about 5 ft (1.5 m) out from side of vehicle with marker facing approaching traffic.

(3) Place third marker (3) approximately 100 ft (30 m) behind vehicle with marker facing approaching traffic.

2-60. HIGHWAY EMERGENCY MARKER KIT SETUP (CONT)

c. Placing markers on undivided, curved highway:

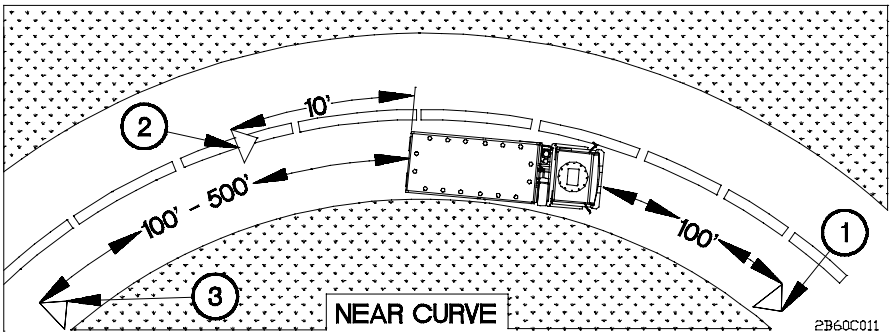

(1) Place one marker (1) approximately 100 ft (30 m) in front of vehicle with marker facing approaching traffic.

(2) Place second marker (2) approximately 10 ft (3 m) behind vehicle and about 5 ft (1.5 m) out from side of vehicle with marker facing approaching traffic.

(3) Place third marker (3) approximately 100 to 500 ft (30 to 150 m) behind vehicle with marker facing approaching traffic and visible before traffic reaches curve.

d. Placing markers on undivided highway with hills:

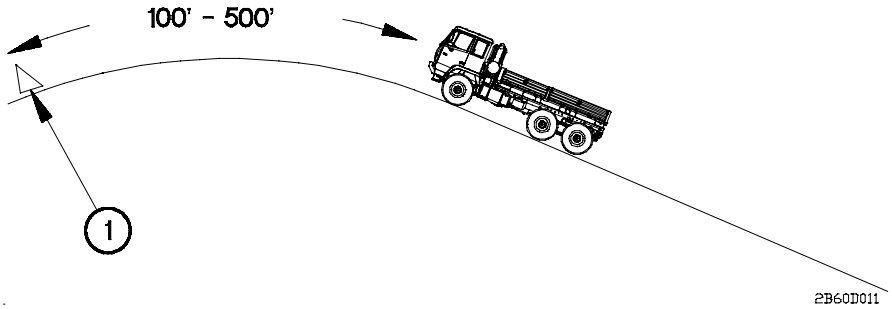

WARNING

Chock wheels when stopped on incline. Vehicle may roll downhill. Failure to comply may result in serious injury or death to personnel or damage to equipment.

(1) Place one marker (1) approximately 100 to 500 ft (30 to 150 m) in front of vehicle with marker facing approaching traffic and visible before traffic reaches top of hill.

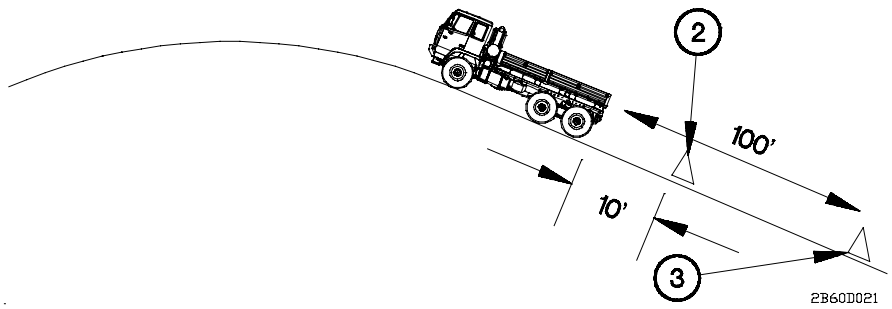

(2) Place second marker (2) approximately 10 ft (3 m) behind vehicle and about 5 ft (1.5 m) out from side of vehicle with marker facing approaching traffic.

(3) Place third marker (3) approximately 100 ft (30 m) behind vehicle with marker facing approaching traffic.

e. Placing markers on divided highway or one way road:

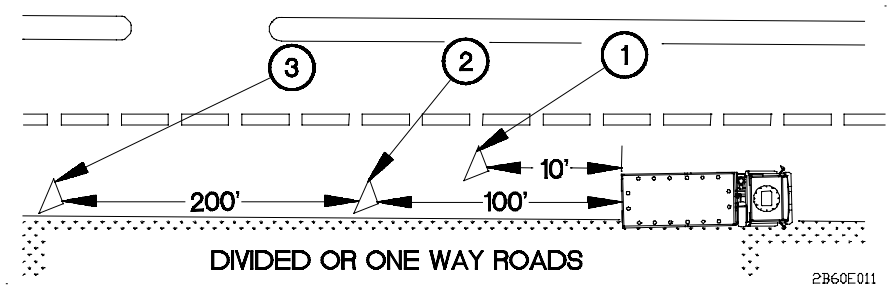

(1) Place one marker (1) approximately 10 ft (3 m) behind vehicle and about 5 ft (1.5 m) out from side of vehicle with marker facing approaching traffic.

(2) Place second marker (2) approximately 100 ft (30 m) behind vehicle with marker facing approaching traffic.

(3) Place third marker (3) approximately 200 ft (60 m) behind second marker with marker facing approaching traffic.

2-60. HIGHWAY EMERGENCY MARKER KIT SETUP (CONT)

f. Stowing markers:

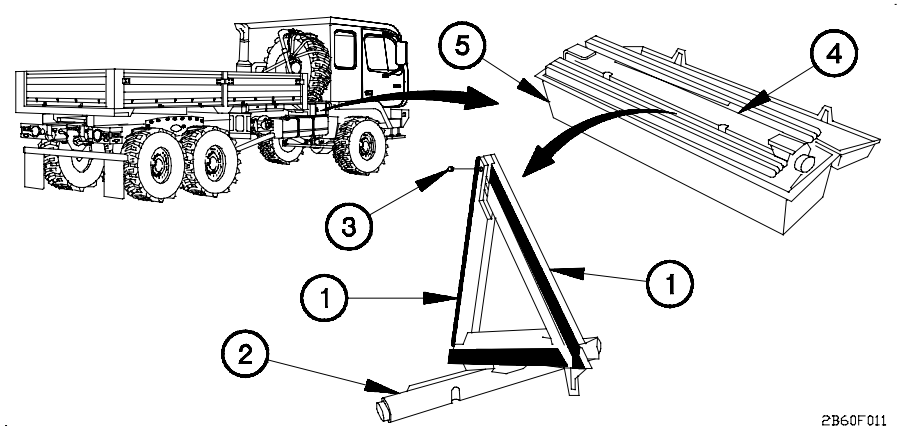

(1) Rotate marker (1) approximately 1/4 turn on base (2).

(2) Remove pin (3) from two marker arms (1).

(3) Fold marker arms (1) down to base (2).

(4) Perform steps (1) through (3) for second and third markers.

(5) Stow three markers (4) in emergency marker kit (5).

(6) Stow emergency marker kit (5) in TOOL KIT.

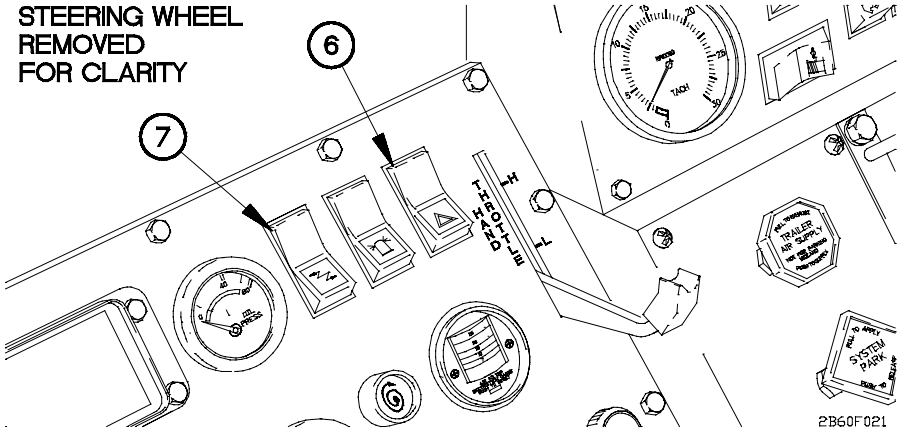

(7) Position hazard lights switch (6) to off.

(8) Position master power switch (7) to off.

2-61. TOWBAR CONNECTION/DISCONNECTION

a. Towbar Connection.

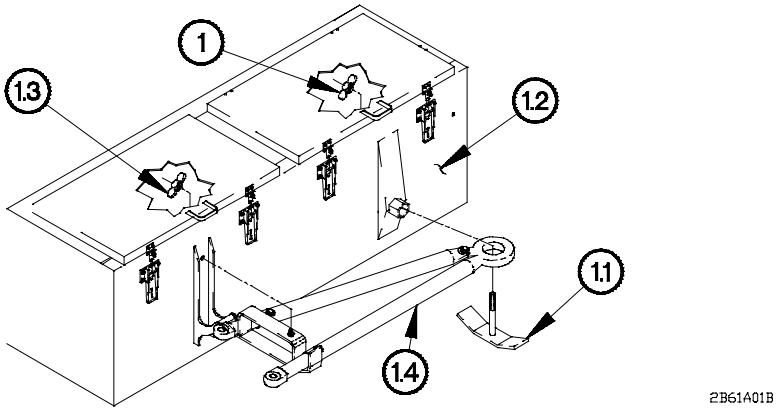

(1) Remove nut (1) and bracket (1.1) from tool box (1.2).

WARNING

Towbar weighs approximately 150 lbs (68 kgs). Attach a suitable lifting device prior to removal. Failure to comply may result in injury to personnel or damage to equipment.

NOTE

Step (1.1) requires the aid of two assistants.

(1.1) Remove nut (1.3) and towbar (1.4) from tool box (1.2).

WARNING

Towing vehicle and disabled vehicle must have parking brakes applied before connecting/disconnecting towbar. Vehicle may roll into each other. Failure to comply may result in serious injury or death to personnel.

NOTE

Step (1.2) requires the aid of an assistant.

(1.2) Position rear of towing vehicle near front of disabled vehicle.

2-61. TOWBAR CONNECTION/DISCONNECTION (CONT)

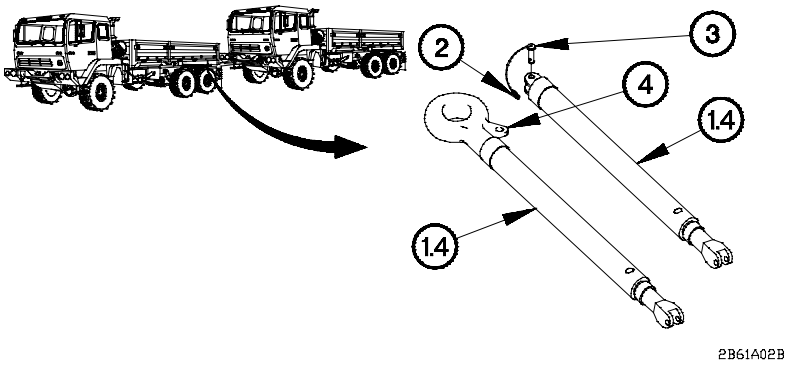

NOTE

Step (2) requires the aid of two assistants.

(2) Position towbar (1.4) between vehicles.

(3) Remove lynch pin (2) from pin (3).

(4) Remove pin (3) from towbar (1.4).

(5) Separate towbar (1.4) at pivot point (4).

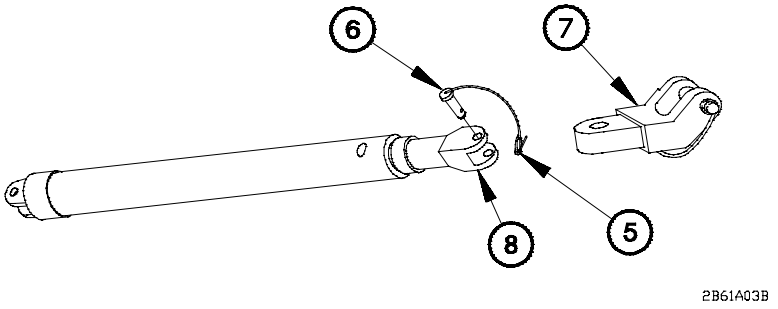

NOTE

Left and right side towbar adapters are removed from towbar clevises the same way. Left side shown.

(6) Remove two lynch pins (5), pins (6), and towbar adapters (7) from towbar clevises (8).

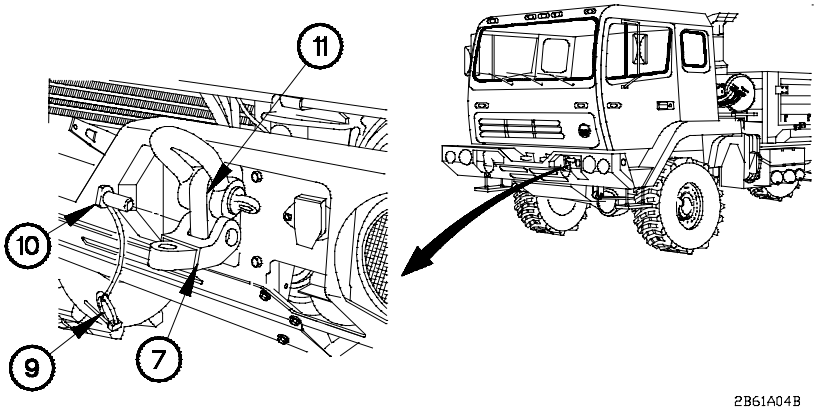

NOTE

Left and right side towbar adapters are installed on tow eyes the same way. Left side shown.

(7) Remove two lynch pins (9) and pins (10) from towbar adapters (7).

NOTE

It may be necessary to remove shackles on some vehicles.

(8) Install two towbar adapters (7) on eyes (11) of disabled vehicle.

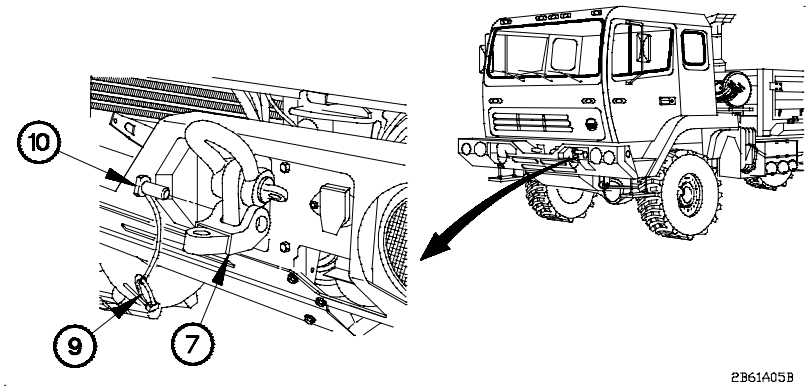

CAUTION

Ensure pins are installed with lynch pin holes down. Failure to comply may result in damage to equipment.

(9) Position two pins (10) in towbar adapters (7).

(10) Install two lynch pins (9) in pins (10).

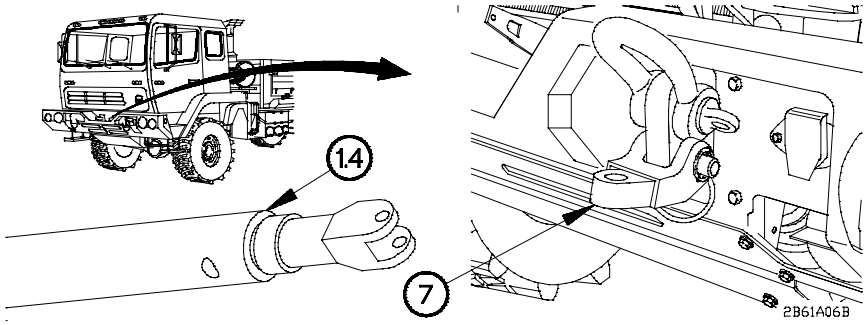

WARNING

Towbar weighs approximately 150 lbs (68 kgs). Attach a suitable lifting device prior to installation. Failure to comply may result in injury to personnel or damage to equipment.

NOTE

- Left and right sides of towbar are installed on towbar adapters the same way. Left side shown.
- Step (11) requires the aid of two assistants.

(11) Position towbar (1.4) on two towbar adapters (7).

2-61. TOWBAR CONNECTION/DISCONNECTION (CONT)

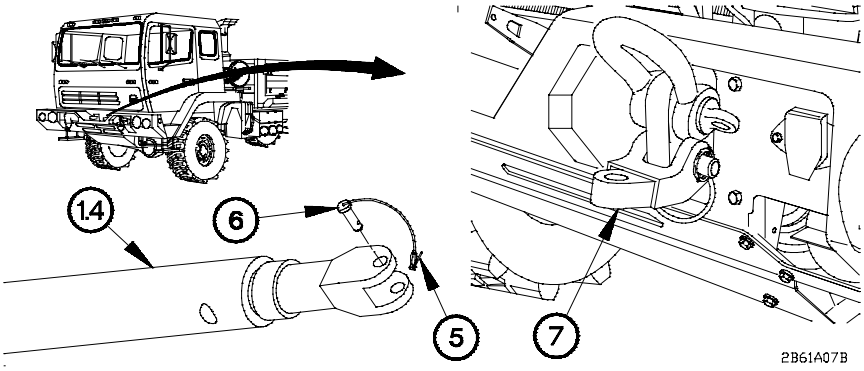

CAUTION

Ensure pins are installed with lynch pin hole down. Failure to comply may result in damage to equipment.

(12) Install two pins (6) in towbar (1.4) and towbar adapters (7).

(13) Install two lynch pins (5) in pins (6).

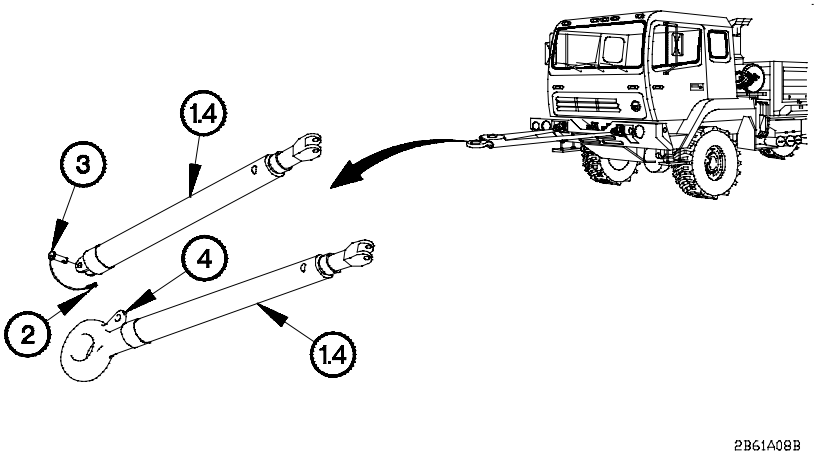

(14) Align left and right sides of towbar (1.4) at pivot point (4).

(15) Install pin (3) in towbar (1.4).

(16) Install lynch pin (2) in pin (3).

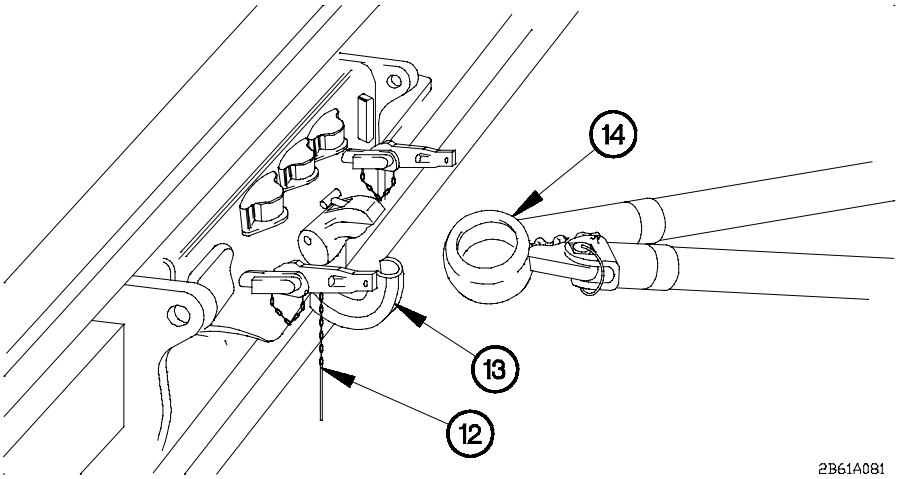

(17) Remove cotter pin (12) from pintle hook (13).

(18) Open pintle hook (13).

WARNING

- **Ground guide is required to guide vehicle backing up. Failure to comply may result in injury to personnel or damage to equipment.**
- **Do not place hands near pintle hook when connecting/disconnecting towbar with pintle hook. Failure to comply may result in injury to personnel.**

NOTE

Steps (19) and (20) require the aid of an assistant.

(19) Slowly back up towing vehicle until towbar eye (14) is aligned with pintle hook (13).

(20) Connect towbar eye (14) to pintle hook (13).

(21) Close pintle hook (13).

(22) Install cotter pin (12) in pintle hook (13).

2-61. TOWBAR CONNECTION/DISCONNECTION (CONT)

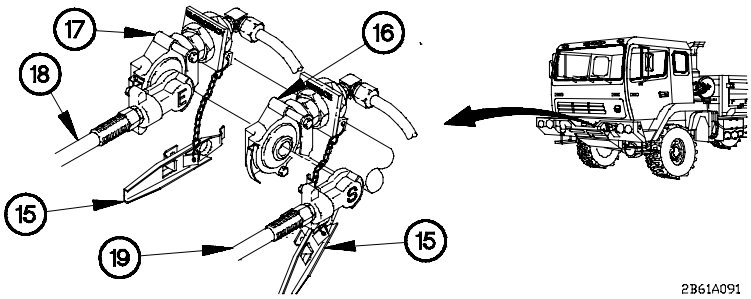

(23) Release parking brakes of disabled vehicle (refer to disabled vehicle Operator's manual).

(24) Remove two dummy couplings (15) from service gladhand (16) and emergency gladhand (17) on front of disabled vehicle.

WARNING

Listen for air leaks coming from the connections at the service and emergency gladhands. Failure to comply may result in serious injury or death to personnel or damage to equipment.

(25) Connect intervehicular air hose (18) to emergency gladhand (17) of disabled vehicle.

(26) Connect intervehicular air hose (19) to service gladhand (16) of disabled vehicle.

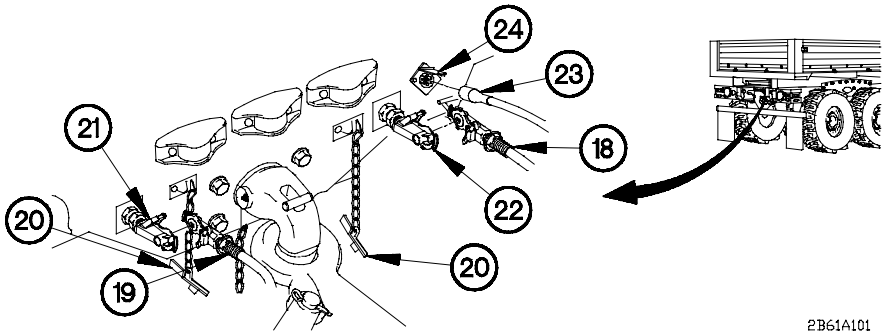

(27) Remove two dummy couplings (20) from service gladhand (21) and emergency gladhand (22) of towing vehicle.

(28) Connect intervehicular air hose (18) to emergency gladhand (22).

(29) Connect intervehicular air hose (19) to service gladhand (21).

(30) Connect intervehicular cable (23) to rear receptacle (24) of towing vehicle.

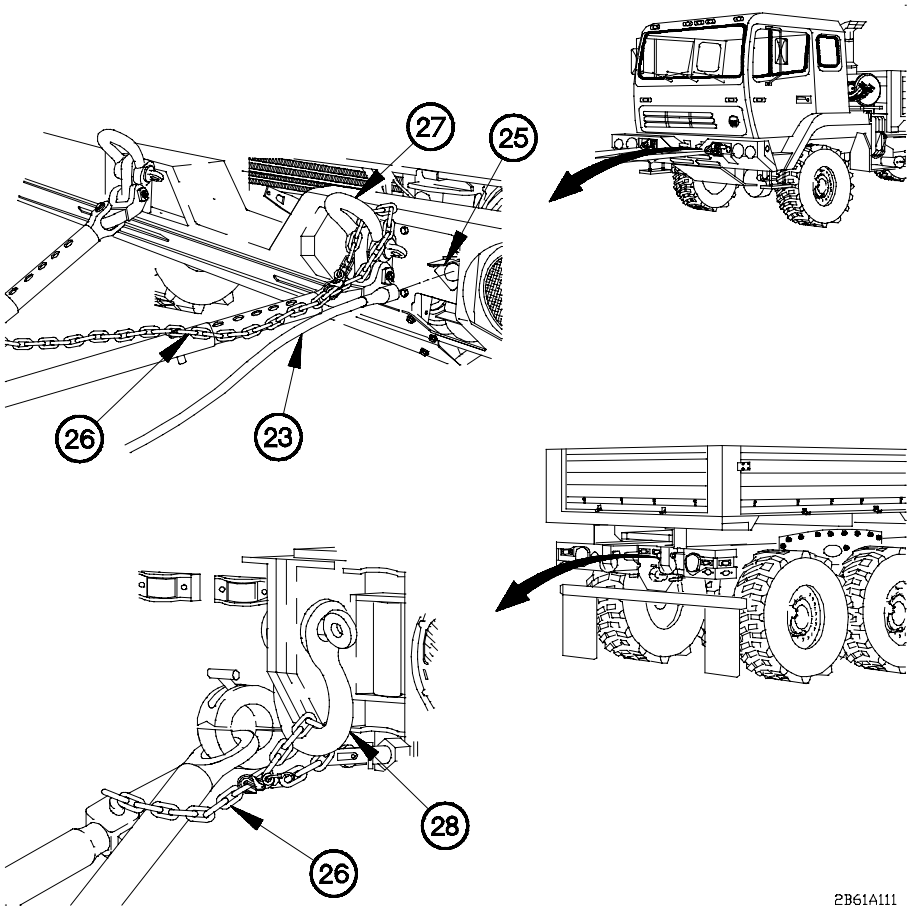

(31) Connect intervehicular cable (23) to front receptacle (25) of disabled vehicle.

NOTE

Left and right side chains are installed the same way. Right side shown.

(32) Attach two chains (26) to shackles (27) on disabled vehicle and to shackles (28) on towing vehicle.

2-61. TOWBAR CONNECTION/DISCONNECTION (CONT)

b. Towbar Disconnection.

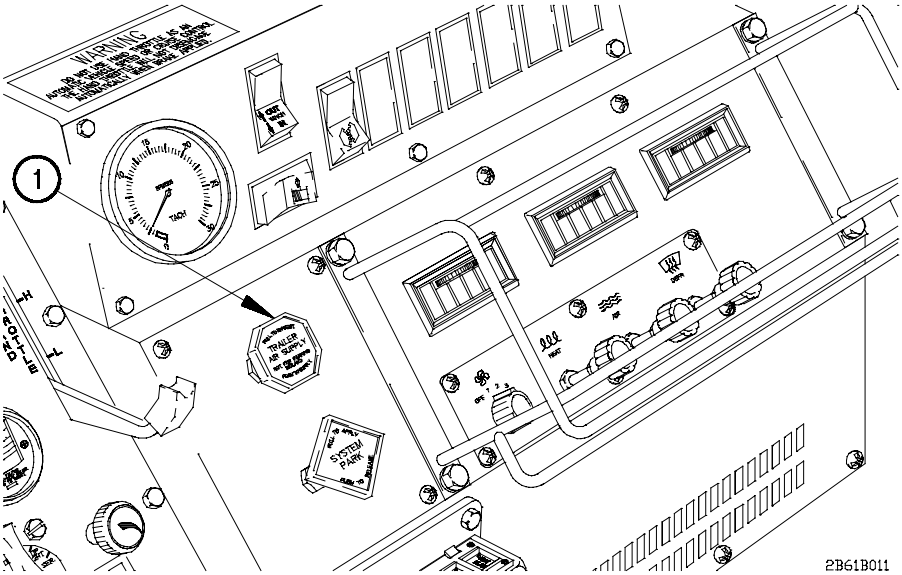

(1) Pull out TRAILER AIR SUPPLY control (1) on towing vehicle.

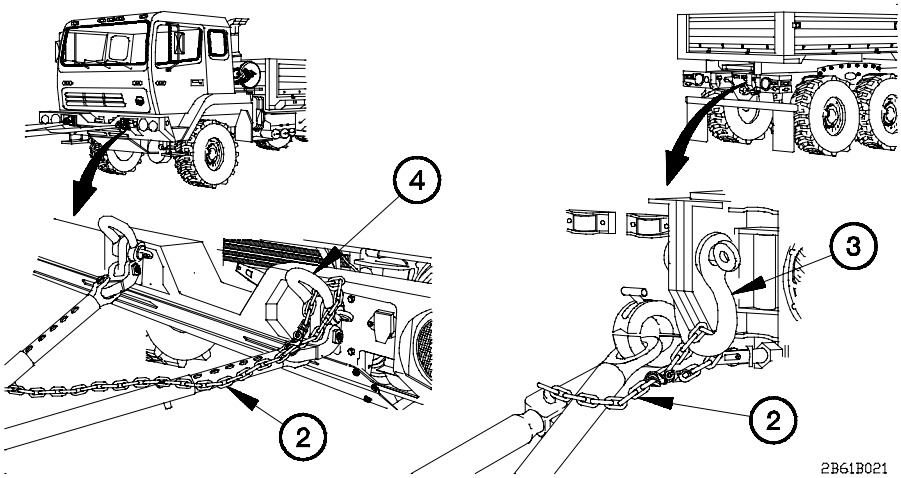

NOTE

Left and right side chains are removed the same way. Right side shown.

(2) Disconnect two chains (2) from shackles (3) of towing vehicle and from shackles (4) on disabled vehicle.

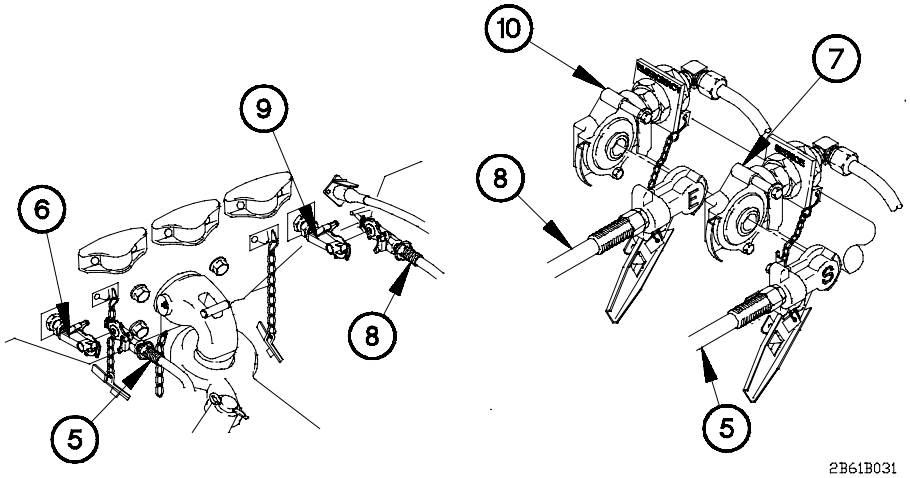

(3) Disconnect intervehicular air hose (5) from service gladhand (6) of towing vehicle and service gladhand (7) on disabled vehicle.

(4) Disconnect intervehicular air hose (8) from emergency gladhand (9) of towing vehicle and emergency gladhand (10) on disabled vehicle.

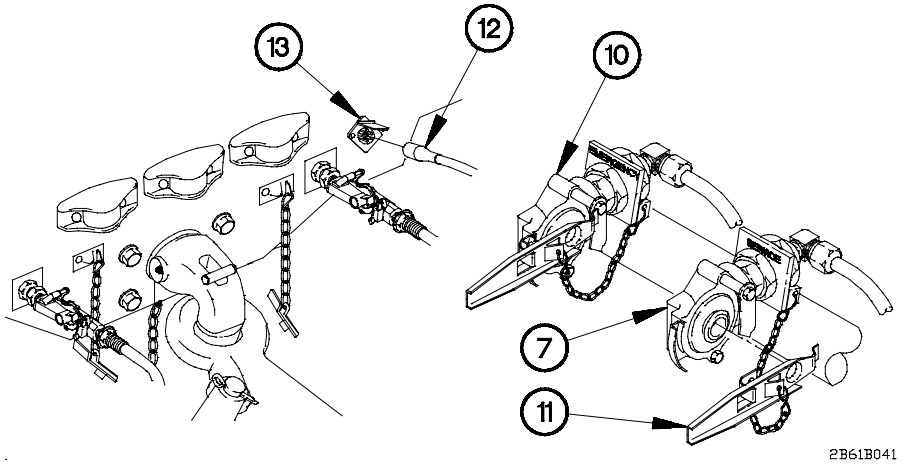

(5) Install dummy couplings (11) on gladhands (7 and 10) of disabled vehicle.

(6) Disconnect intervehicular cable (12) from rear receptacle (13) on towing vehicle.

2-61. TOWBAR CONNECTION/DISCONNECTION (CONT)

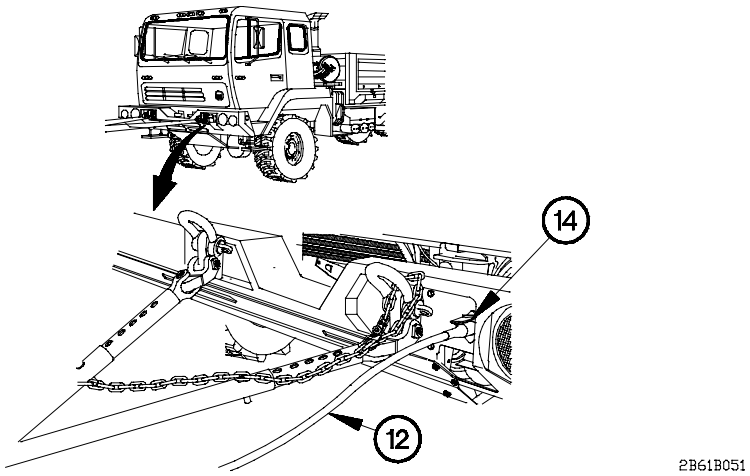

(7) Disconnect intervehicular cable (12) from front receptacle (14) on disabled vehicle.

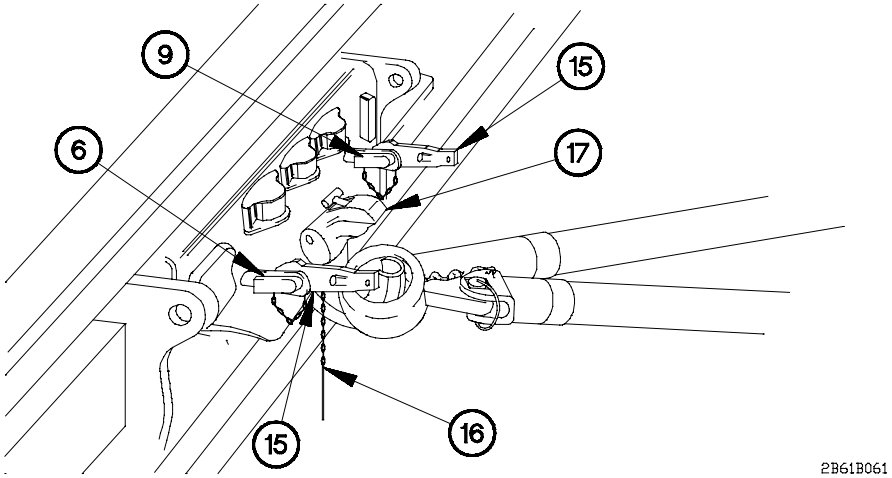

(8) Install dummy couplings (15) on gladhands (6 and 9) of towing vehicle.

(9) Remove cotter pin (16) from pintle hook (17).

(10) Open pintle hook (17).

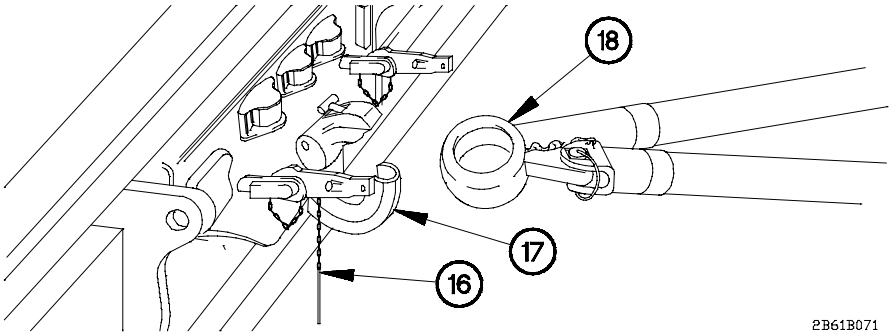

WARNING

Do not place hands near pintle hook when connecting/disconnecting towbar with pintle hook. Failure to comply may result in injury to personnel.

NOTE

Steps (11) and (12) require the aid of an assistant.

(11) Remove towbar (18) from pintle hook (17).

(12) Drive towing vehicle forward. When towing vehicle is clear, lower towbar (18) to ground.

(13) Close pintle hook (17).

(14) Install cotter pin (16) in pintle hook (17).

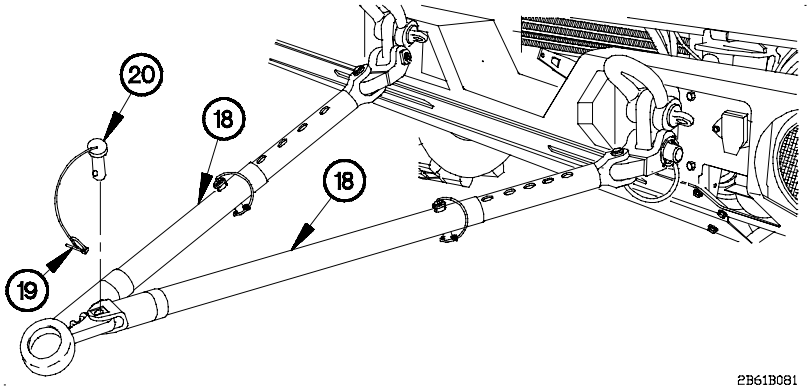

(15) Remove lynch pin (19) and pin (20) from towbar (18).

(16) Separate left and right sides of towbar (18).

2-61. TOWBAR CONNECTION/DISCONNECTION (CONT)

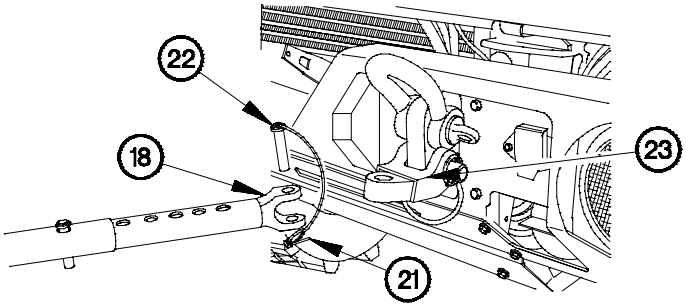

2B61B091

WARNING

Towbar weighs approximately 150 lbs (68 kgs). Attach a suitable lifting device prior to removal. Failure to comply may result in injury to personnel or damage to equipment.

NOTE

- Left and right sides of towbar are removed the same way. Left side shown.
- Step (17) requires the aid of two assistants.

(17) Remove two lynch pins (21), pins (22), and towbar (18) from two towbar adapters (23).

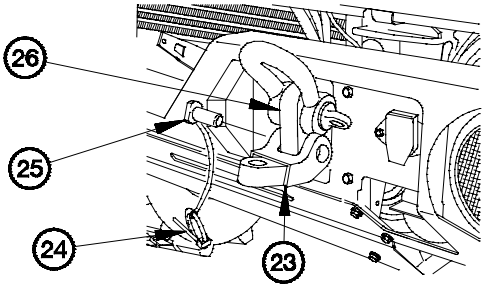

2B61B101

NOTE

Left and right side towbar adapters are removed the same way. Left side shown.

(18) Remove two lynch pins (24), pins (25), and towbar adapters (23) from tow eyes (26).

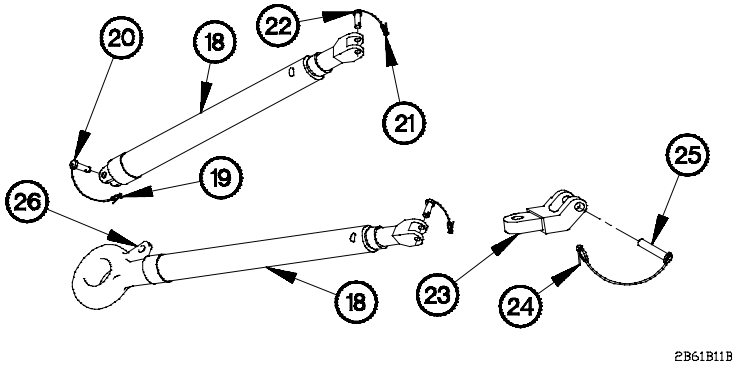

(19) Install two pins (25) and two lynch pins (24) in two towbar adapters (23).

(20) Install towbar adapters (23) on towbar (18) with two pins (21) and lynch pin (20).

(21) Align left and right sides of towbar (18) at pivot point (26).

(22) Install pin (20) and lynch pin (19) in towbar (18).

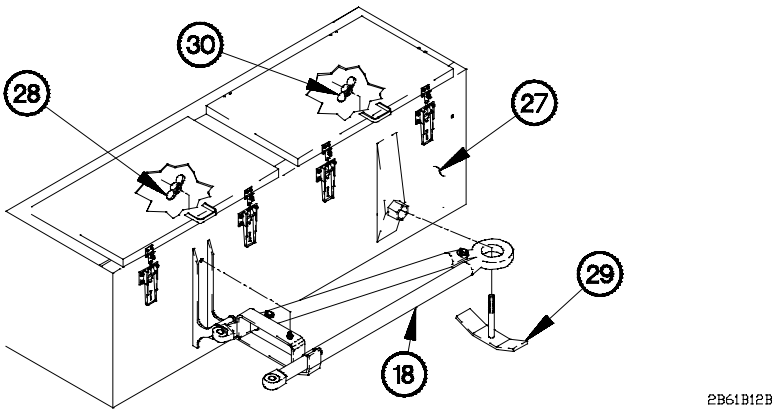

WARNING

Towbar weighs approximately 150 lbs (68 kgs). Attach a suitable lifting device prior to installation. Failure to comply may result in injury to personnel or damage to equipment.

NOTE

Steps (23) and (24) require the aid of two assistants.

(23) Install towbar (18) on tool box (27) with nut (28).

(24) Install bracket (29) on tool box (27) with nut (30).

2-62. TOWING DISABLED VEHICLE

a. Towbar Connection.

WARNING

- **DO NOT flat tow a fully loaded MTV and trailer combination. The MTV Wrecker towbar can be damaged if weight capacity is exceeded. Failure to comply may result in serious injury or death to personnel or damage to equipment.**

- **When towing a vehicle with nonfunctional brakes, use extreme caution and reduce/adjust speed accordingly. Failure to comply may result in serious injury or death to personnel or damage to equipment.**

CAUTION

- Flat towing is the recommended means of towing. Lift and tow should only be performed in situations that provide no other means to move the disabled vehicle. Lift and tow may damage frame. Failure to comply may result in damage to equipment.

- Both drive shafts connected to the transmission transfer case must be removed when flat towing any M1078/M1083 series vehicle. Failure to comply may result in damage to equipment.

(1) Connect towbar between towing vehicle and disabled vehicle (para 2-61).

(2) Cage rear brakes on disabled vehicle (para 3-18).

NOTE

If disabled vehicle is a M1078 or M1083 series vehicle, proceed to subpara b. If disabled vehicle is another series vehicle, refer to Operator's manual for that vehicle.

2-62. TOWING DISABLED VEHICLE (CONT)

b. Preparation of Disabled Vehicle (M1078/M1083 Series).

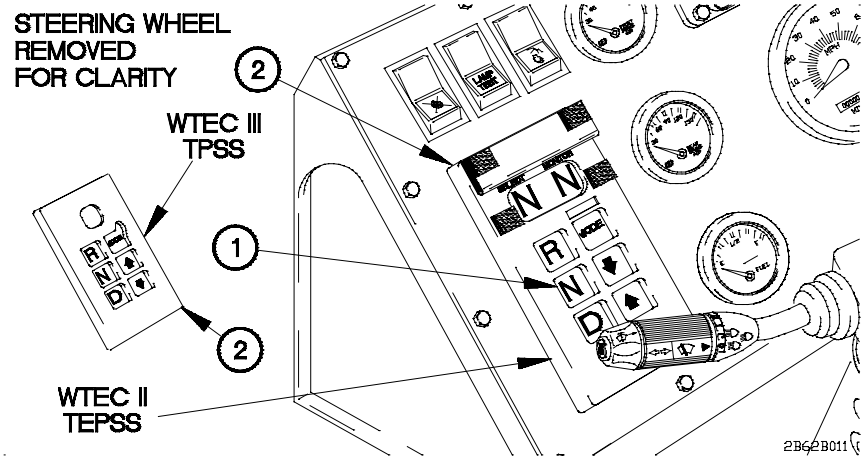

CAUTION

- Both drive shafts connected to the transmission transfer case must be removed if disabled M1078 or M1083 series vehicle is flat towed. Failure to comply may result in damage to towed vehicle.
- Front axle drive shaft must be removed prior to performing a rear connection lift and tow. Failure to comply may result in damage to equipment.
- Intermediate axle drive shaft must be removed on M1083 series vehicles prior to performing a front connection lift and tow. Failure to comply may result in damage to equipment.
- Rear axle drive shaft must be removed on M1078 series vehicles prior to performing a front connection lift and tow. Failure to comply may result in damage to equipment.

NOTE

Disabled vehicles must be prepared and moved in accordance with FM 20-22 and FM 21-305.

(1) Notify Unit Maintenance to remove drive shaft(s) as required.

(1.1) Press N (Neutral) button (1) on WTEC II TEPSS (2) or WTEC III TPSS (2).

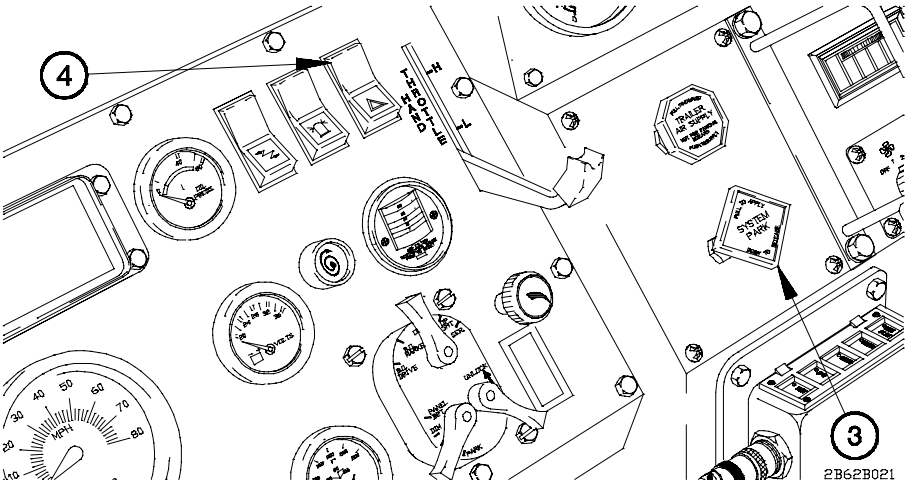

(2) Push in SYSTEM PARK control (3).

(3) Position hazard lights switch (4) to on.

c. Preparation of Towing Vehicle.

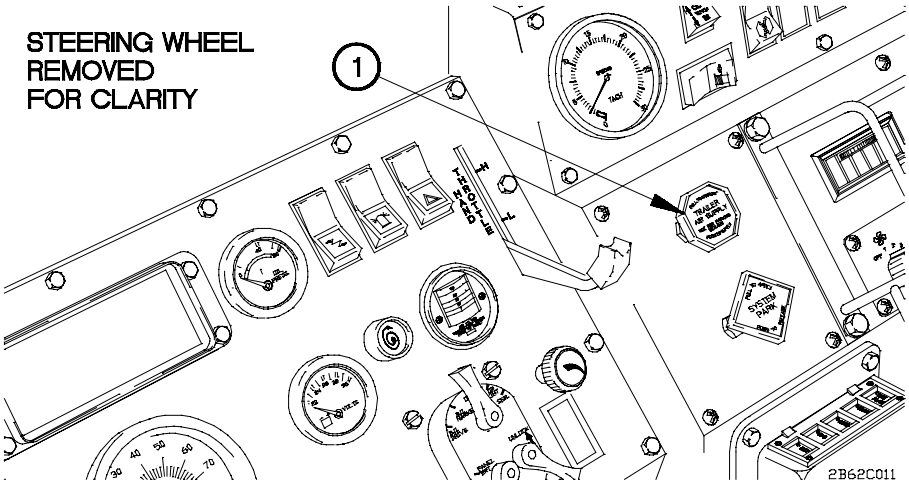

(1) Start engine (para 2-27a or b).

(2) Push in TRAILER AIR SUPPLY control (1).

2-62. TOWING DISABLED VEHICLE (CONT)

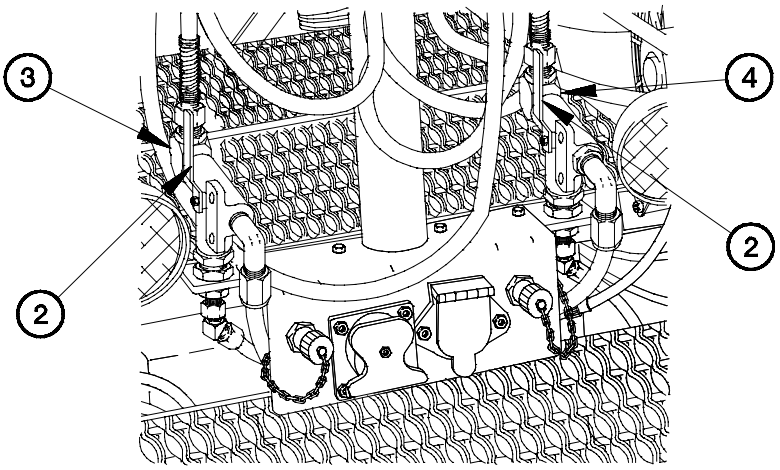

NOTE

If towing vehicle is M1088, perform step (3).

(3) Position gladhand selector valves (2) for service gladhand (3) and emergency gladhand (4) to REAR GLADHAND (horizontal).

WARNING

Personnel must not occupy towed vehicle during towing operation. Vehicle may become disconnected while being towed. Failure to comply may result in serious injury or death to personnel.

CAUTION

Maximum speed for flat tow of M1078 or M1083 series vehicles is 30 mph (48 km/h). Failure to comply may result in damage to vehicle.

(4) Transport disabled vehicle.

2-63. DELETED

a. Deleted.

2-64. DELETED

a. Deleted.

(2) Deleted.

(3) Deleted.

2-65. 15K SELF-RECOVERY WINCH (SRW) OPERATION

a. Spooling Cable to Front of Vehicle.

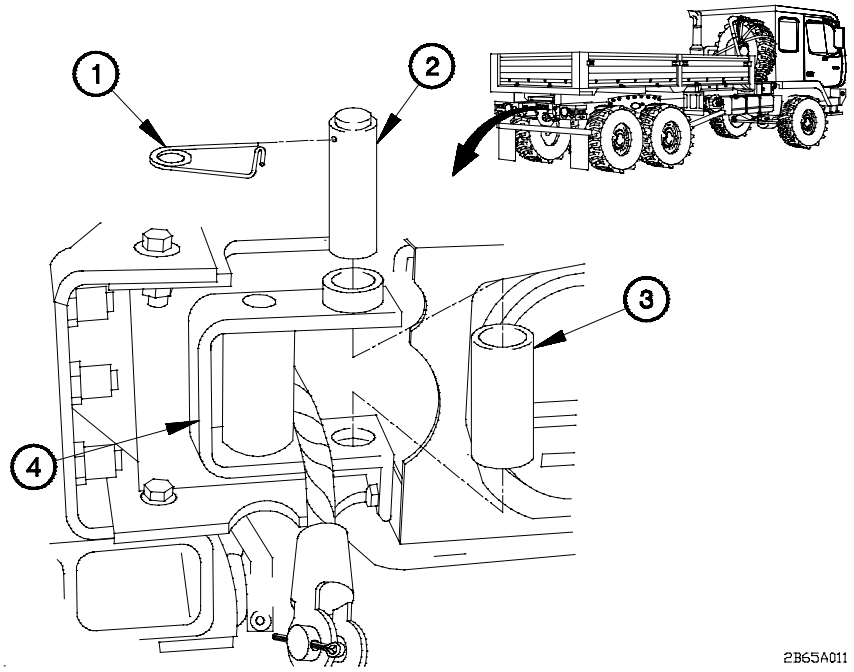

(1) Shut down engine (para 2-27f).

(2) Remove retaining pin (1), pin (2), and roller (3) from rear roller support (4).

2-65. 15K SELF-RECOVERY WINCH (SRW) OPERATION (CONT)

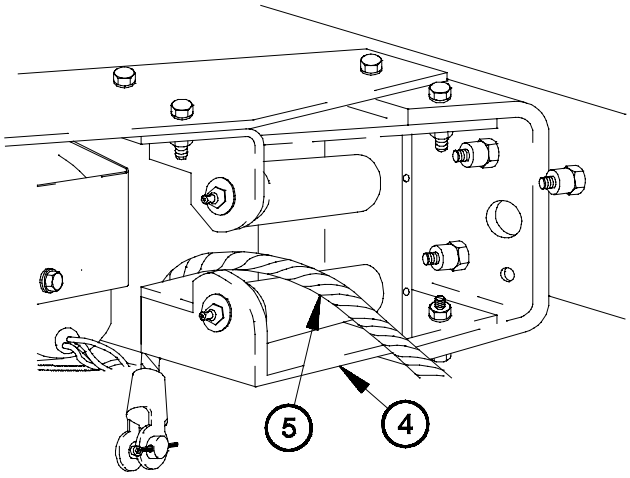

WARNING

Wear heavy leather-palmed work gloves when handling cable. Cables can become frayed or contain broken wires. Never let moving cable slide through hands, even when wearing gloves. Failure to comply may result in injury to personnel.

(3) Remove cable (5) from rear roller support (4).

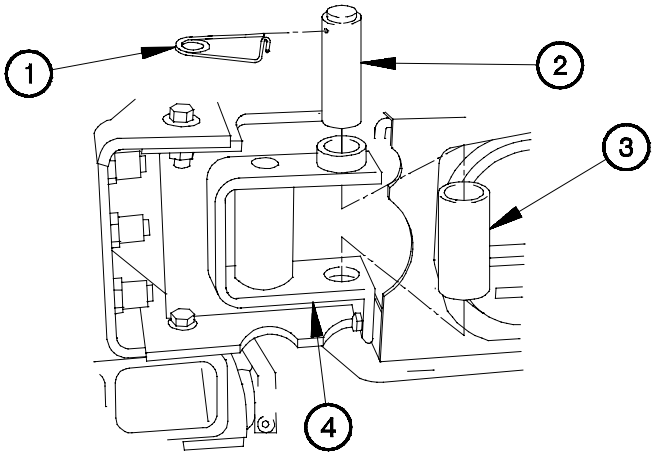

NOTE

Install retaining pin so that clasping end is toward curbside of vehicle.

(4) Install roller (3) in rear roller support (4) with pin (2) and retaining pin (1).

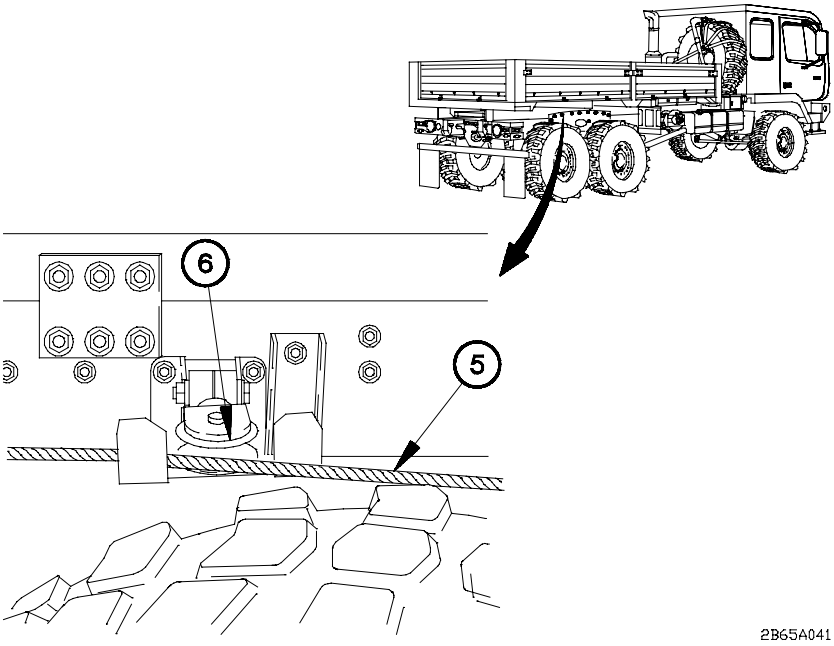

(5) Remove cable (5) from rear cable pulley (6).

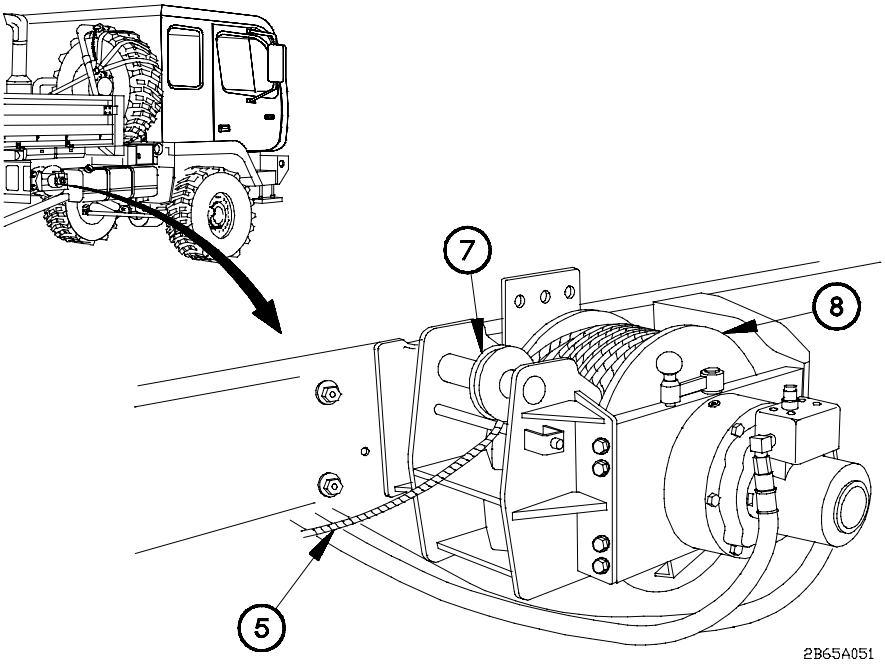

(6) Remove cable (5) from rear cable guide (7) on 15K SRW (8).

2-65. 15K SELF-RECOVERY WINCH (SRW) OPERATION (CONT)

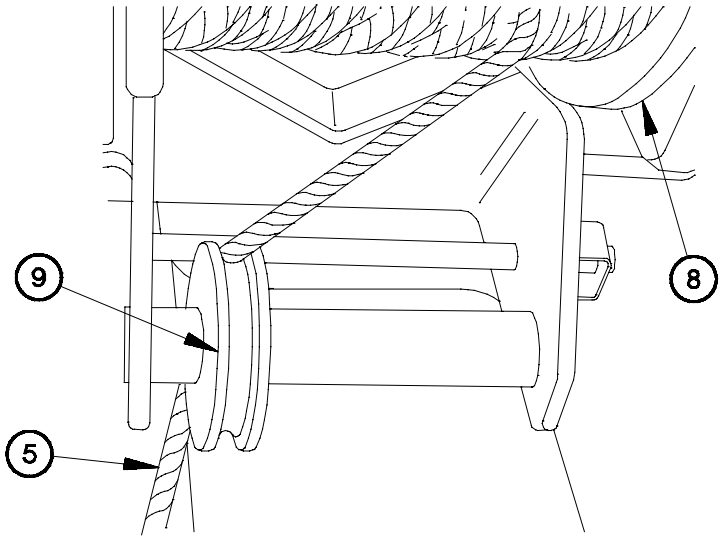

2B65A061

(7) Position cable (5) toward front of vehicle.

(8) Install cable (5) through front cable guide (9) on 15K SRW (8).

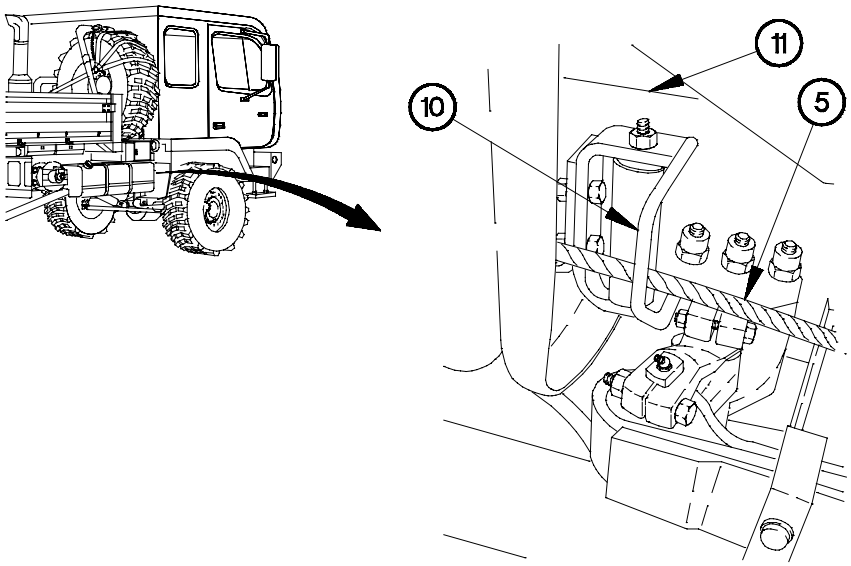

2B65A071

(9) Install cable (5) through cable guide (10) behind fuel tank (11).

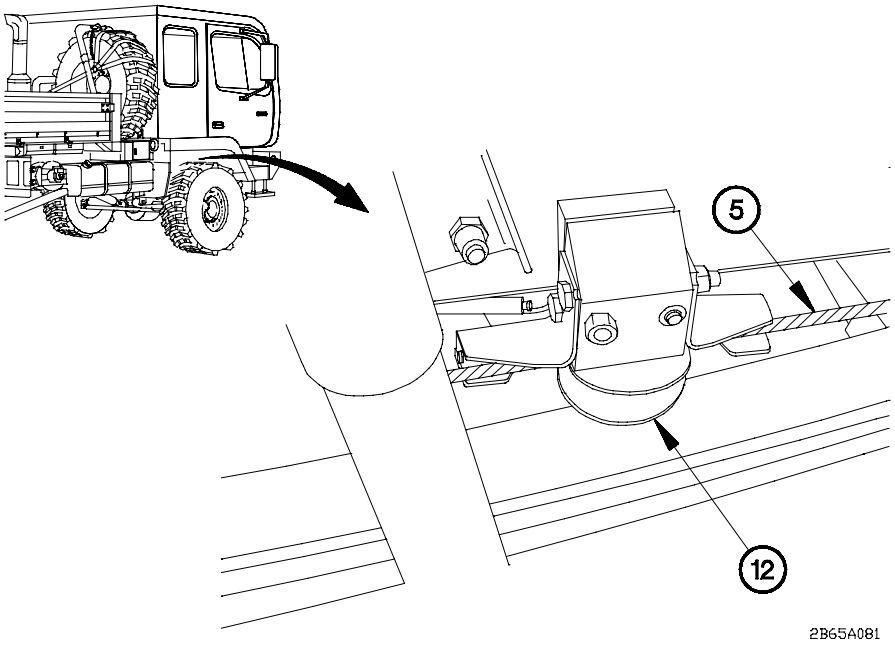

(10) Install cable (5) through front cable pulley (12).

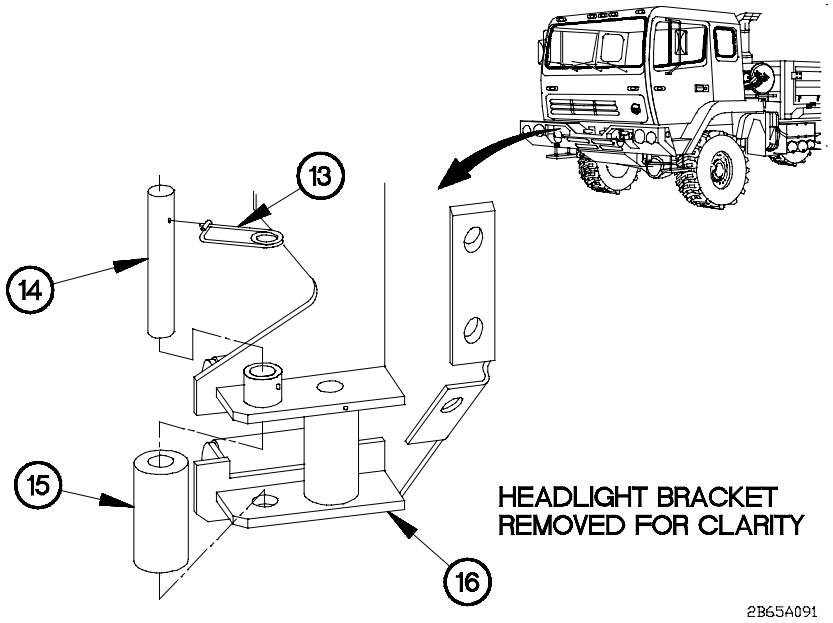

(11) Remove retaining pin (13), pin (14), and roller (15) from front roller support (16).

2-65. 15K SELF-RECOVERY WINCH (SRW) OPERATION (CONT)

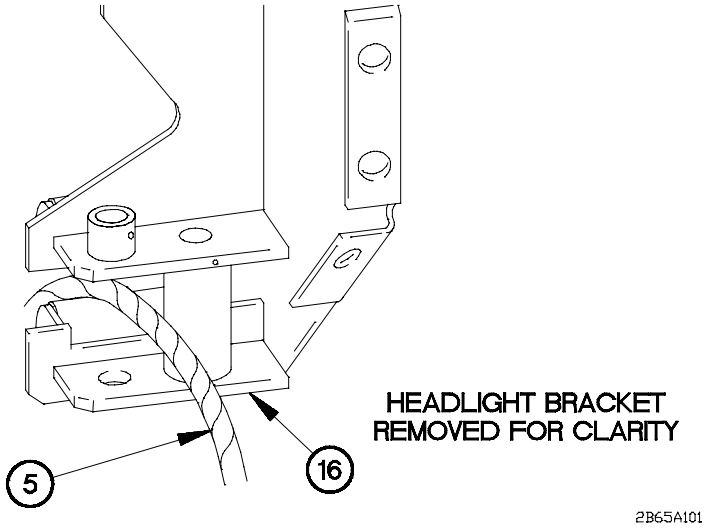

(12) Install cable (5) through front roller support (16).

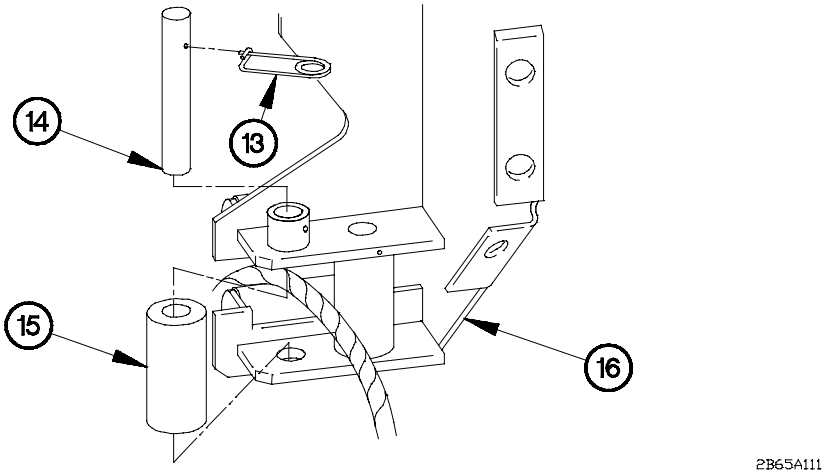

NOTE

Install retaining pin so that clasping end is toward curbside of vehicle.

(13) Install roller (15) on front roller support (16) with pin (14) and retaining pin (13).

b. Spooling Cable to Rear of Vehicle.

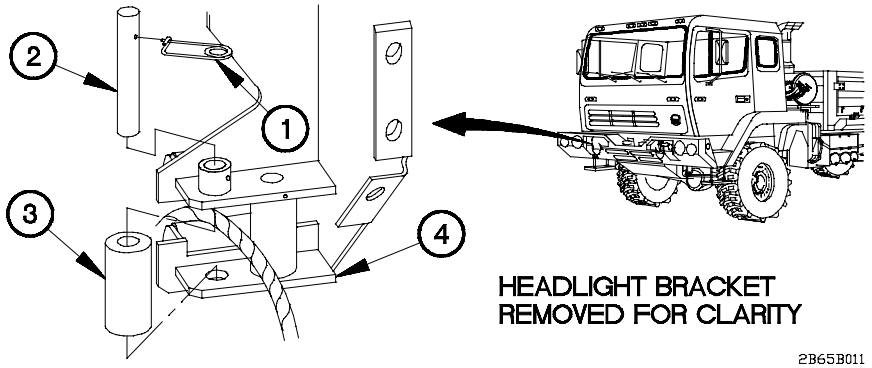

NOTE

M1088 and M1089 cables can be spooled to the front only.

(1) Shut down engine (para 2-27f).

(2) Remove retaining pin (1), pin (2), and roller (3) from front roller support (4).

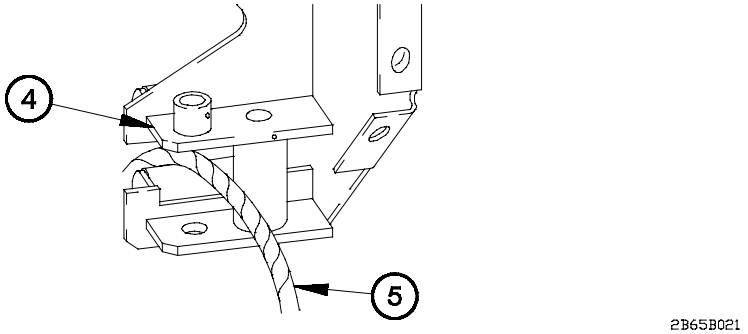

WARNING

Wear heavy leather-palmed work gloves when handling cable. Cables can become frayed or contain broken wires. Never let moving cable slide through hands, even when wearing gloves. Failure to comply may result in injury to personnel.

(3) Remove cable (5) from front roller support (4).

2-65. 15K SELF-RECOVERY WINCH (SRW) OPERATION (CONT)

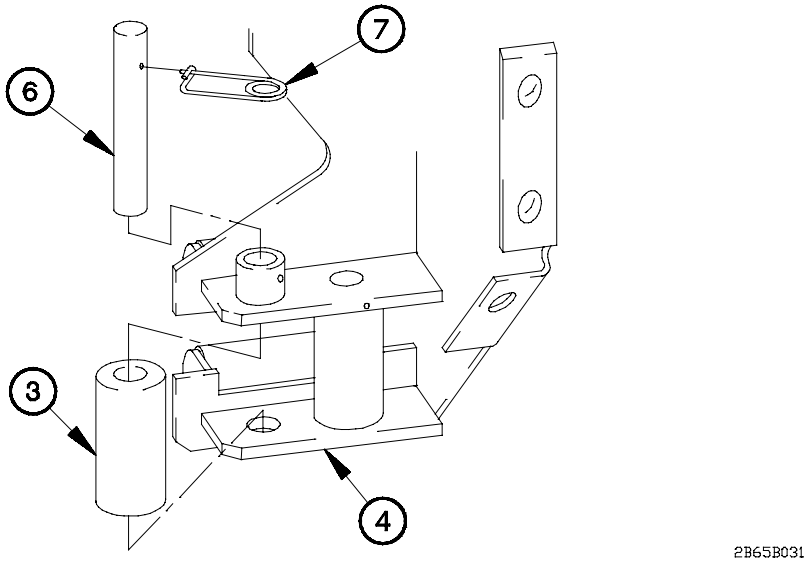

NOTE

Install retaining pin so that clasping end is toward curbside of vehicle.

(4) Install roller (3) on front roller support (4) with pin (6) and retaining pin (7).

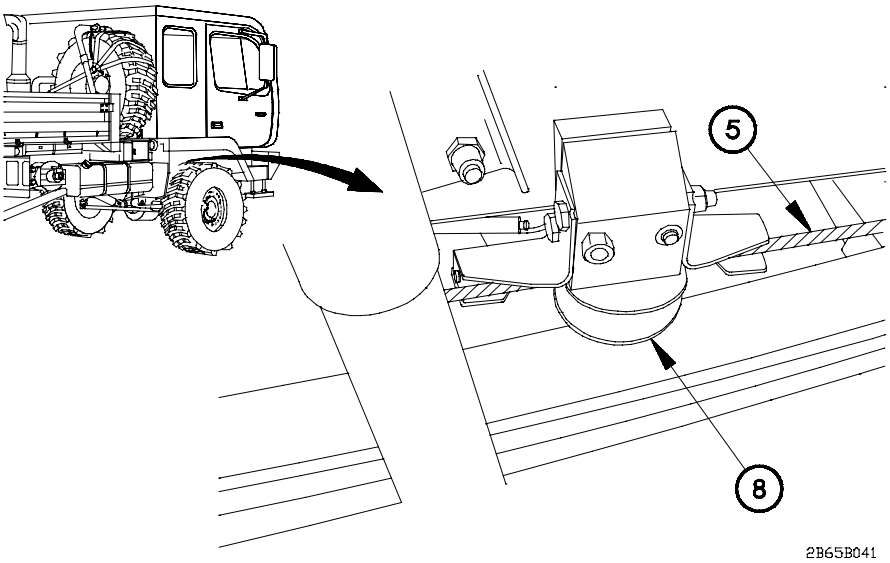

(5) Remove cable (5) from front cable pulley (8).

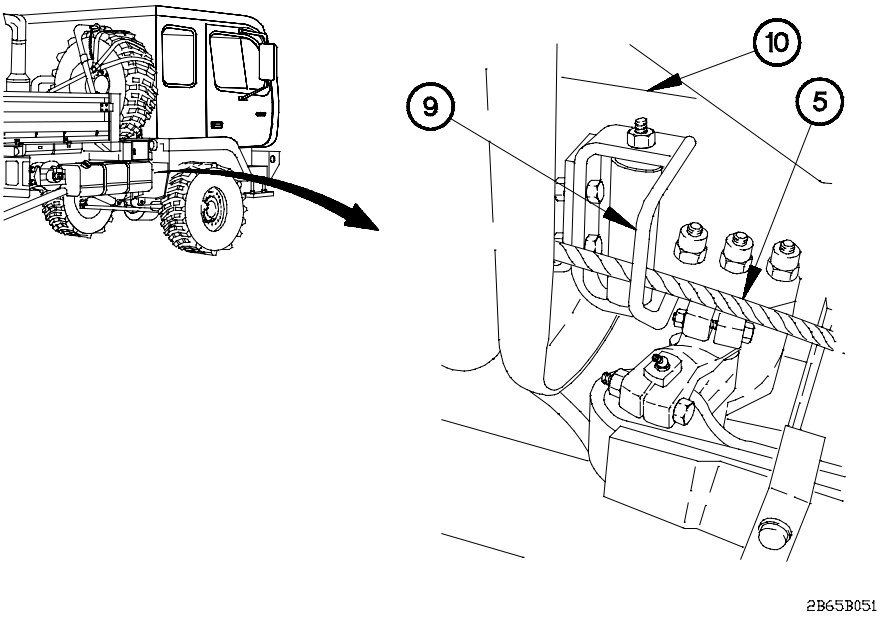

(6) Remove cable (5) from cable guide (9) behind fuel tank (10).

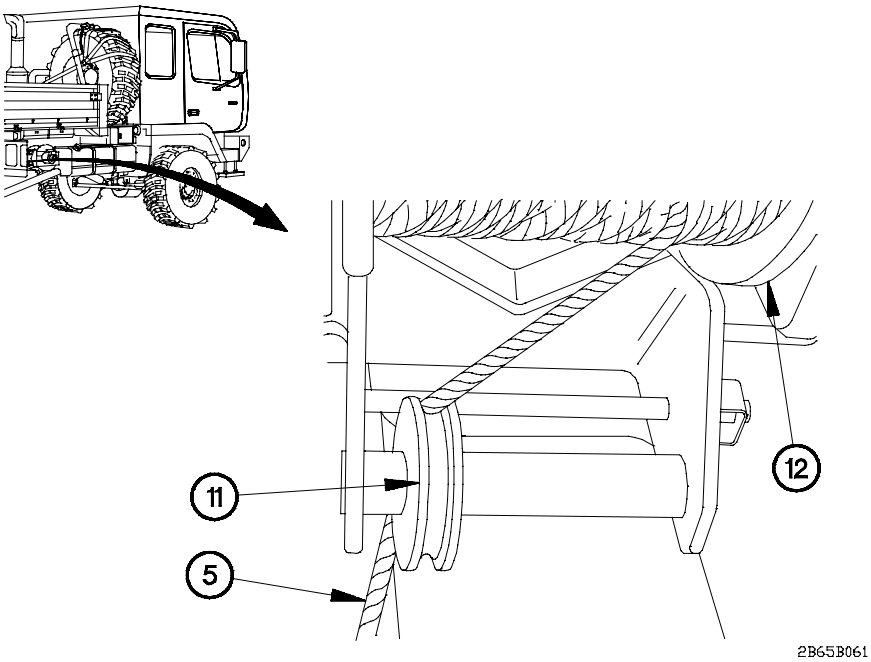

(7) Remove cable (5) from front cable guide (11) on 15K SRW (12).

2-65. 15K SELF-RECOVERY WINCH (SRW) OPERATION (CONT)

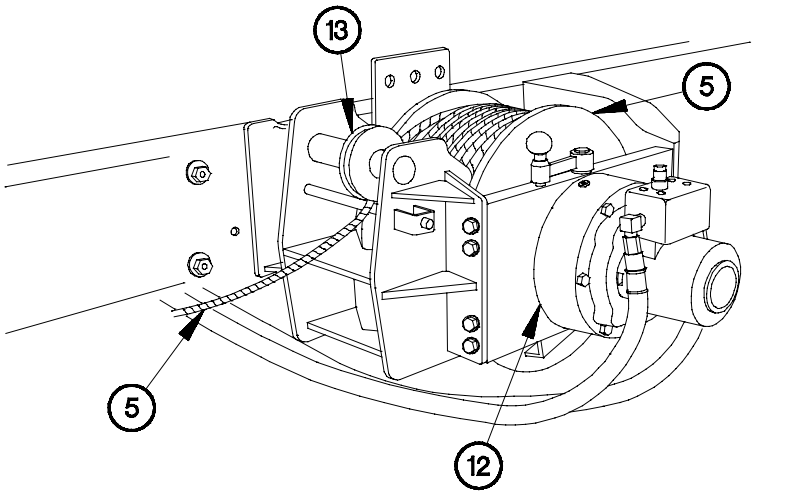

(8) Position cable (5) toward rear of vehicle.

(9) Install cable (5) through rear cable guide (13) on 15K SRW (12).

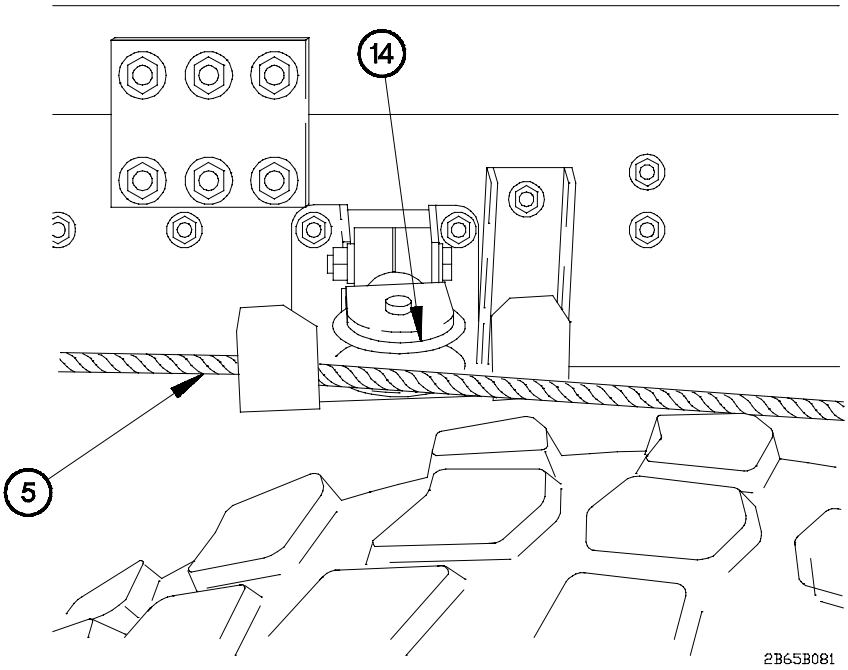

(10) Install cable (5) through rear cable pulley (14).

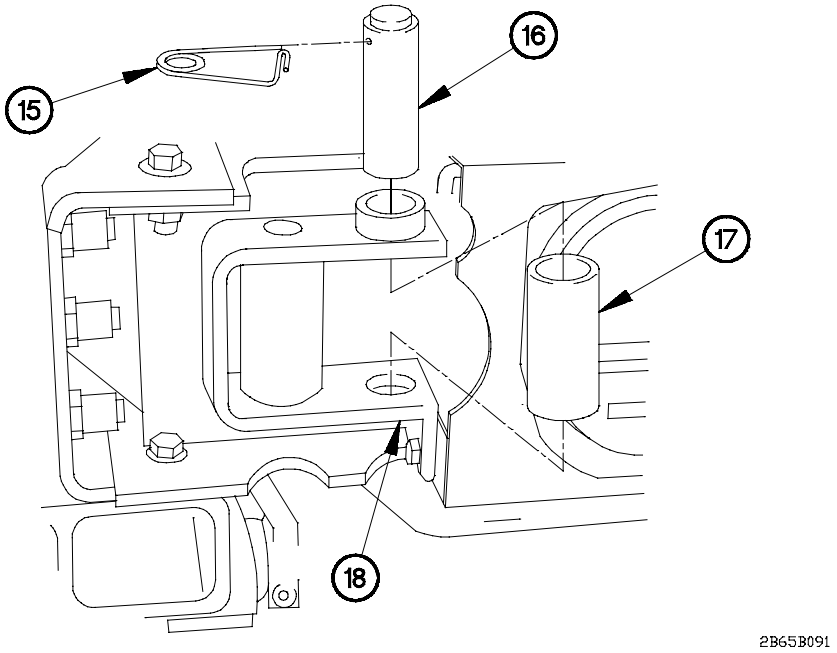

(11) Remove retaining pin (15), pin (16), and roller (17) from rear roller support (18).

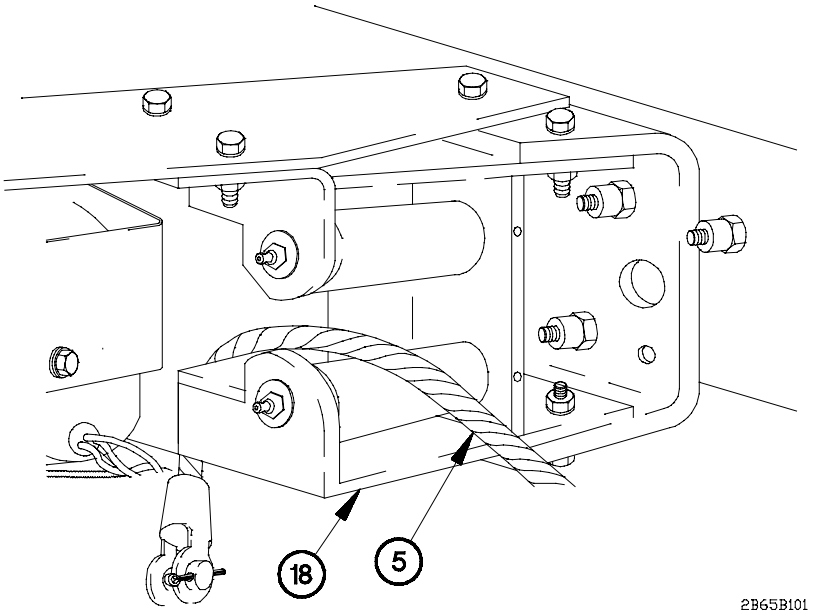

(12) Install cable (5) through rear roller support (18).

2-65. 15K SELF-RECOVERY WINCH (SRW) OPERATION (CONT)

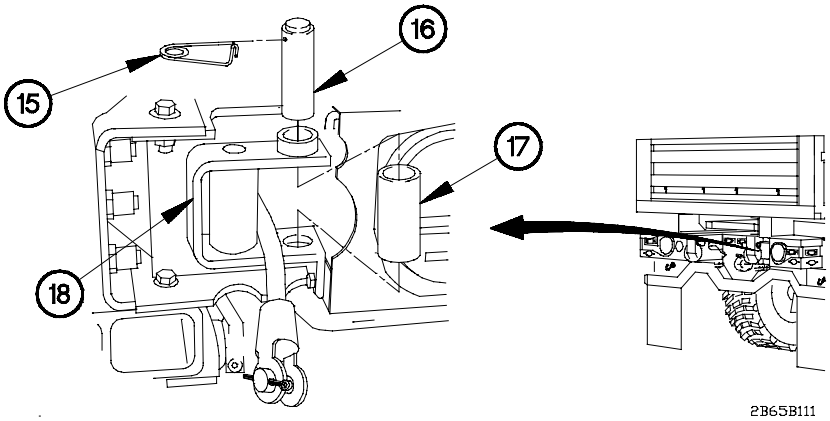

(13) Install roller (17) in rear roller support (18) with pin (16) and retaining pin (15).

c. 15K Self-Recovery Winch (SRW) Operation.

WARNING

Ensure line pull does not exceed capacity of 15K Self-Recovery Winch (SRW). Failure to comply may result in serious injury or death to personnel.

CAUTION

Ensure that supply valve and shutoff valve on M1089 are open before operating hydraulic equipment. Failure to comply may result in damage to equipment.

Table 2-24. 15K Self-Recovery Winch (SRW) Pull Capacity

Cable Layer	Maximum Line Pull
Bottom Layer (five wraps)	15,500 lbs (68,944 N)
2nd Layer	13,870 lbs (61,693 N)
3rd Layer	12,550 lbs (55,822 N)
4th Layer	11,460 lbs (50,974 N)
5th Layer	10,540 lbs (46,881 N)
6th Layer	9,760 lbs (43,412 N)
Top Layer	9,090 lbs (40,432 N)

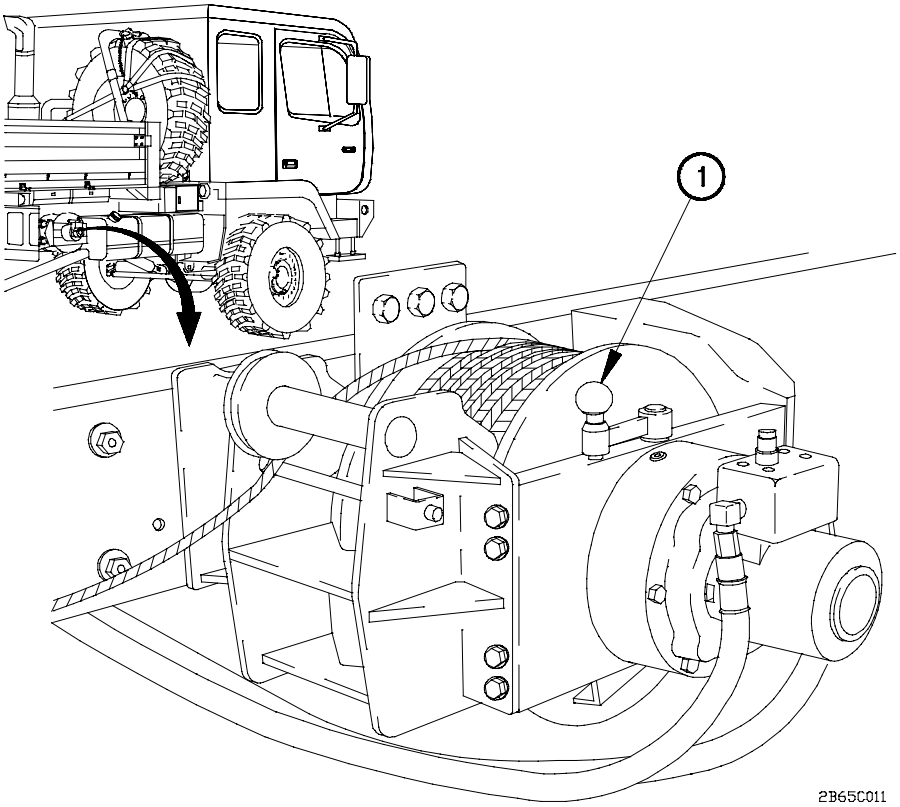

(1) Shut down engine (para 2-27f).

WARNING

There must always be at least five wraps of cable on 15K Self-Recovery Winch (SRW). If load is applied with less than five wraps of cable on 15K SRW, cable may come loose on drum. Failure to comply may result in serious injury or death to personnel.

CAUTION

Do not attempt to pull load over 15K Self-Recovery Winch (SRW) capacity. Failure to comply may result in damage to equipment.

(2) Place 15K SRW clutch control lever (1) in DISENGAGED position.

2-65. 15K SELF-RECOVERY WINCH (SRW) OPERATION (CONT)

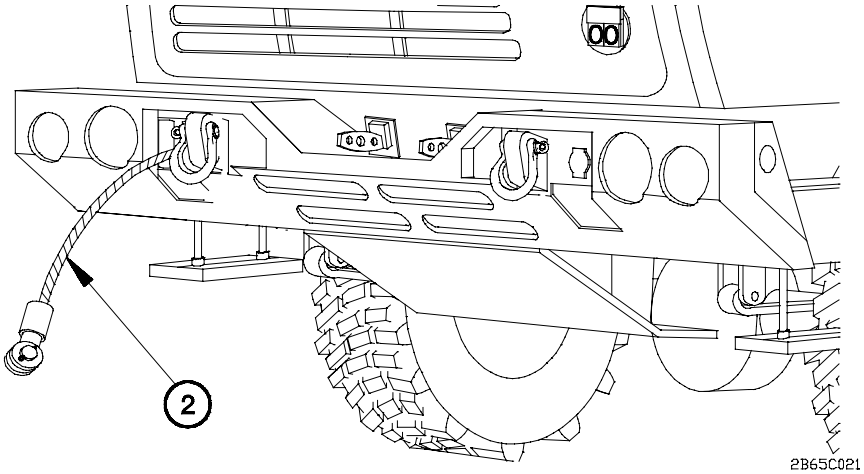

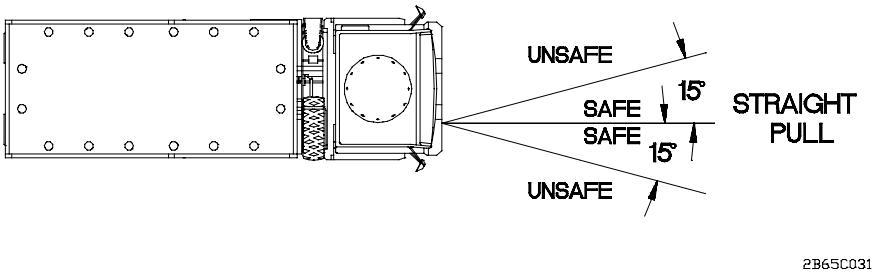

WARNING

Wear heavy leather-palmed work gloves when handling cable. Cables can become frayed or contain broken wires. Never let moving cable slide through hands, even when wearing gloves. Failure to comply may result in injury to personnel.

CAUTION

Do not attach cable to any object more than approximately 15 degrees away from a straight 15K Self-Recovery Winch (SRW) pull. Failure to comply may result in damage to equipment.

(3) Pull out cable (2) and attach to secure object.

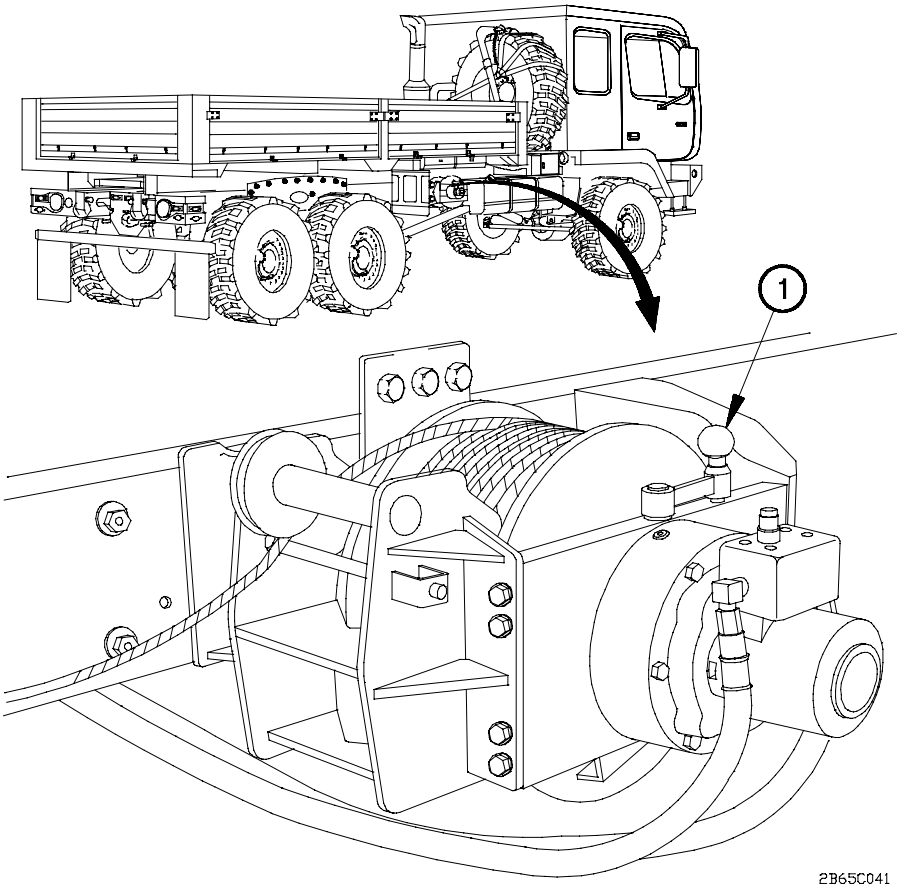

WARNING

Keep all personnel clear of area when tension is on cable. Failure to comply may result in serious injury or death to personnel.

(4) Place 15K SRW clutch control lever (1) in the ENGAGED position.

(5) Start engine (para 2-27a or b).

2-65. 15K SELF-RECOVERY WINCH (SRW) OPERATION (CONT)

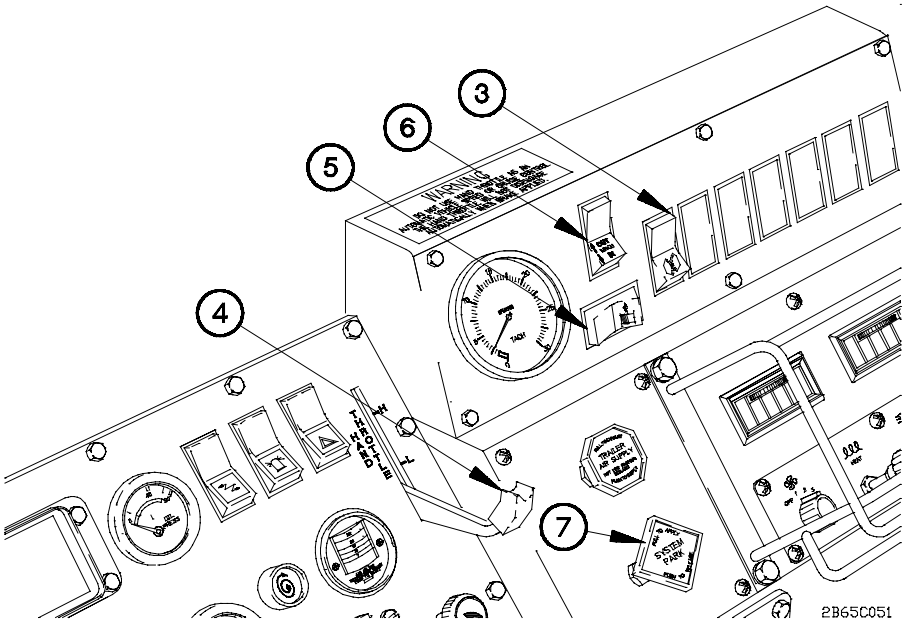

(6) Position PTO switch (3) to on.

CAUTION

Keep tachometer within 1,250-1,450 rpm when Power Take-Off (PTO) is engaged. Failure to comply may result in damage to equipment.

NOTE

In the event of a tachometer failure a HAND THROTTLE lever positioned to L is approximately 1,250-1,450 rpm.

(7) Set engine speed to 1,250-1,450 rpm or place HAND THROTTLE lever (4) to L.

(8) Position winch switch (5) to on.

(9) Hold WINCH IN/OUT switch (6) in the WINCH IN position until vehicle is recovered.

(10) Release WINCH IN/OUT switch (6).

(11) Pull out SYSTEM PARK control (7).

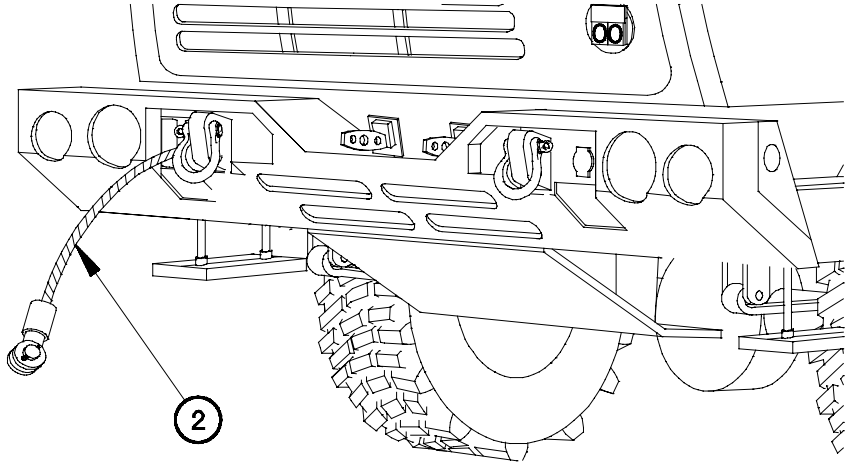

2B65C061

(12) Remove cable (2) from secure object.

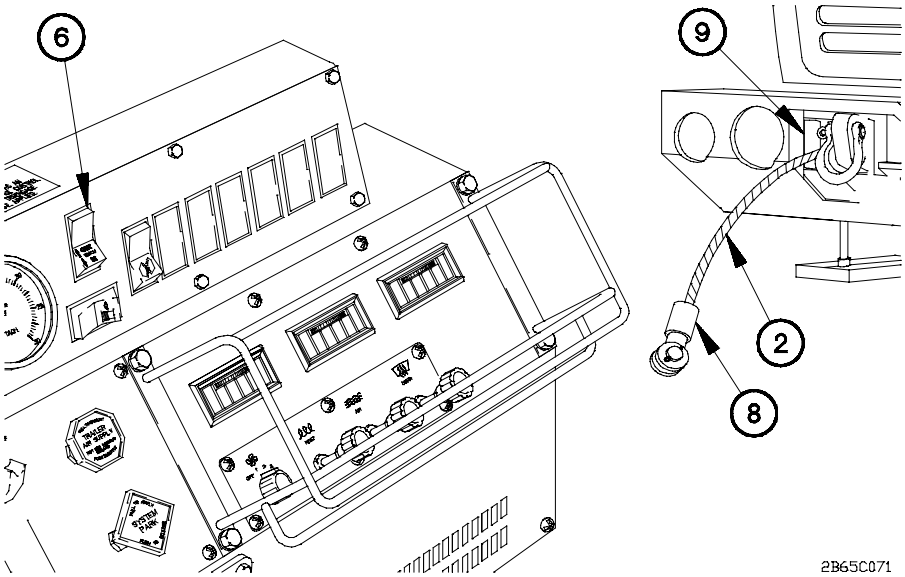

2B65C071

(13) Hold WINCH IN/OUT switch (6) in the WINCH IN position to reel in cable (2) until cable socket (8) contacts rollers (9).

2-65. 15K SELF-RECOVERY WINCH (SRW) OPERATION (CONT)

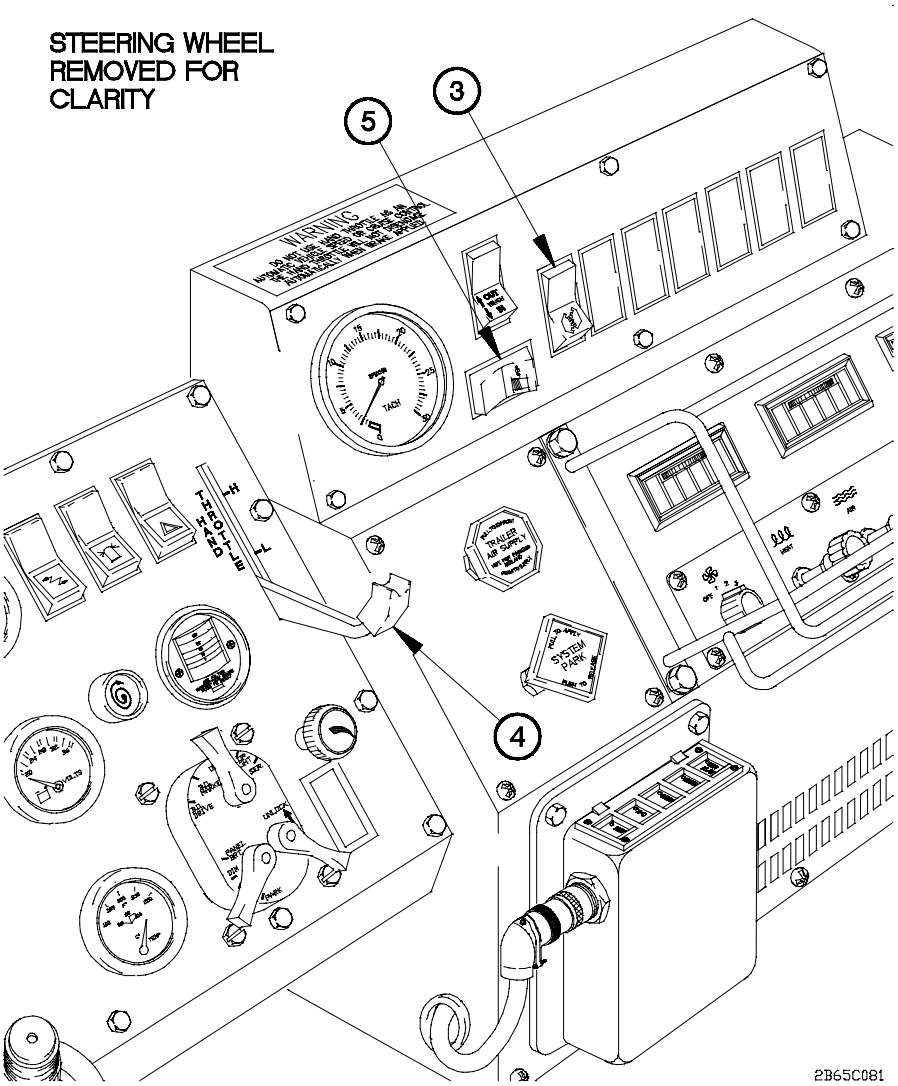

(14) Position winch switch (5) to off.

(15) Set engine speed to idle (750 rpm) or place HAND THROTTLE lever (4) to full down position.

(16) Position PTO switch (3) to off.

2-66. DELETED

a. Deleted.

All data on pages 2-777 through 2-787, including pages 2-779 through 2-786 deleted.

2-67. EMERGENCY PROCEDURES

WARNING

- **Remove rings, bracelets, wristwatches, neck chains, and any other jewelry before working around the vehicle. Jewelry may catch on equipment, or may short across an electrical circuit or battery terminal. Failure to comply may result in serious injury or death to personnel.**
- **Do not smoke, have open flame, or make sparks near batteries when starting vehicle. Batteries can explode. Failure to comply may result in serious injury or death to personnel.**

a. Starting Disabled Vehicle.

NOTE

Notify Unit Maintenance if vehicle was started by another vehicle.

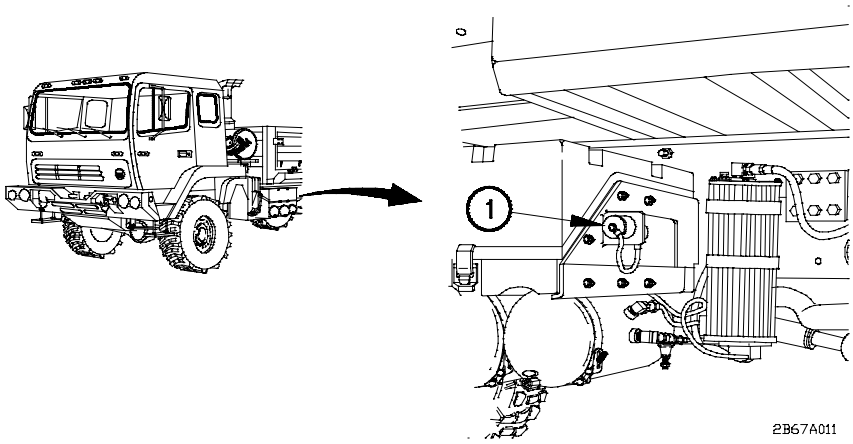

(1) Position starting vehicle next to disabled vehicle so NATO receptacles (1) are facing each other.

WARNING

Ensure master power switch on both vehicles is turned off before connecting NATO power cable. Ensure vehicles are not touching each other. Failure to comply may result in serious injury or death to personnel.

(2) Shut down engine (para 2-27f).

CAUTION

Always connect NATO power cable to disabled vehicle before connecting it to starting vehicle. Failure to comply may result in damage to batteries or cable.

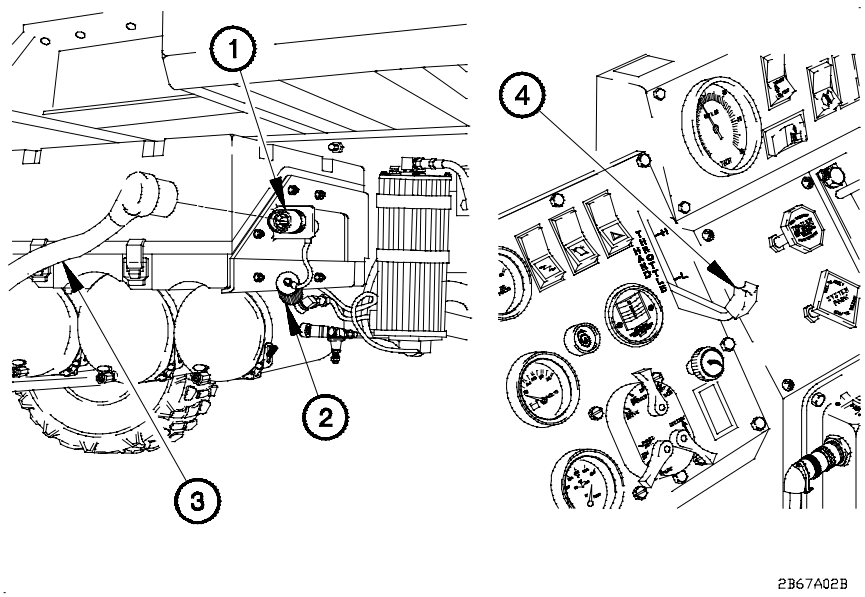

(3) Remove cap (2) from NATO receptacle (1) on disabled vehicle.

(4) Install NATO power cable (3) on NATO receptacle (1) on disabled vehicle.

(5) Remove cap (2) from NATO receptacle (1) on starting vehicle.

(6) Install NATO power cable (3) on NATO receptacle (1) on starting vehicle.

NOTE

Step (7) through (9) requires the aid of an assistant.

(7) Start engine (para 2-27a or b) on starting vehicle.

(8) Set engine speed to 1,250 to 1,450 rpm by placing HAND THROTTLE lever (4) to L.

(9) Start engine of disabled vehicle (para 2-27a or b).

2-67. EMERGENCY PROCEDURES (CONT)

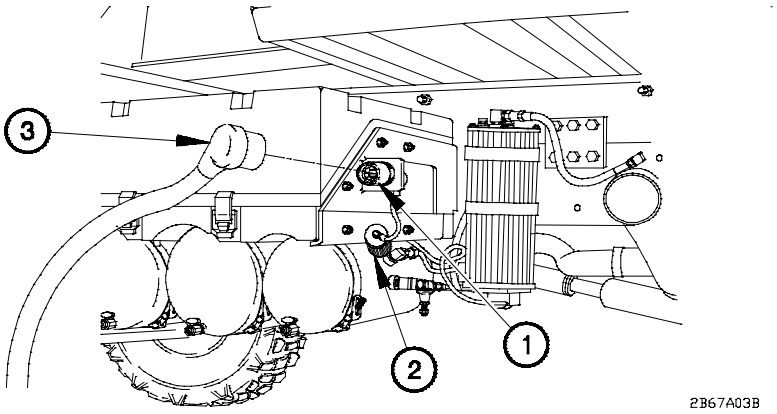

(10) Remove NATO power cable (3) from NATO receptacle (1) on disabled vehicle.

(11) Install cap (2) on NATO receptacle (1) on disabled vehicle.

(12) Remove NATO power cable (3) from NATO receptacle (1) on starting vehicle.

(13) Install cap (2) on NATO receptacle (1) on starting vehicle.

b. Loss in Air Pressure.

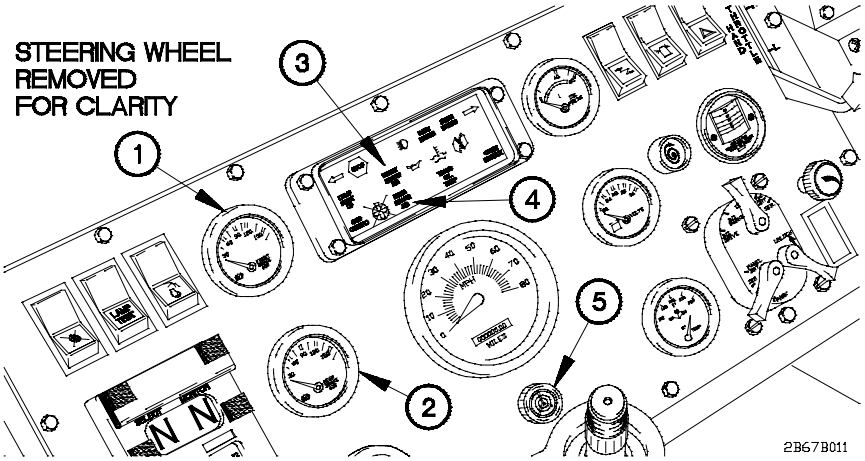

(1) Check FRONT BRAKE AIR pressure gage (1) and REAR BRAKE AIR pressure gage (2) if FRONT BRAKE AIR indicator (3) or REAR BRAKE AIR indicator (4) illuminate and audible alarm (5) sounds while driving vehicle.

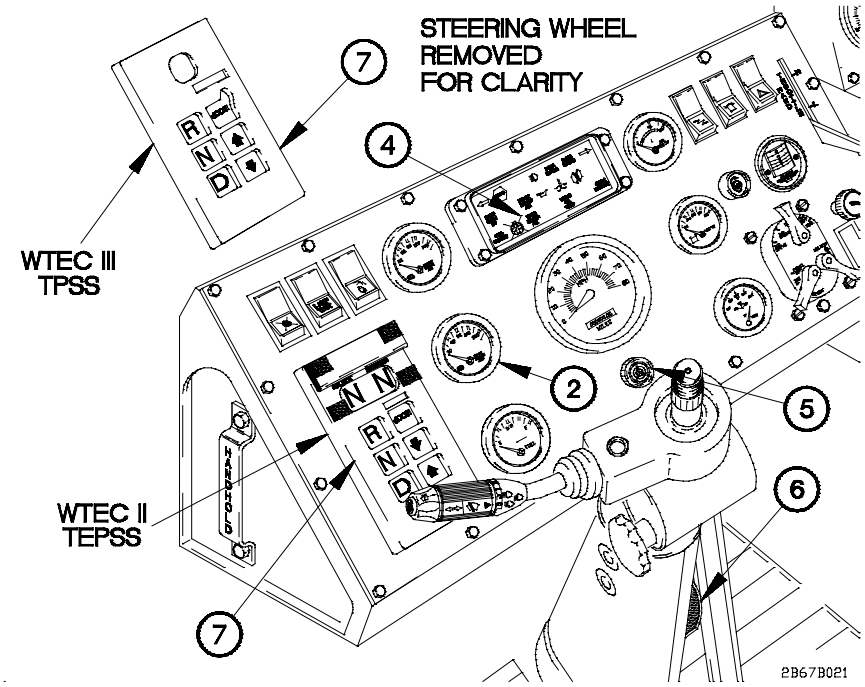

WARNING

Rear axle service brakes will not operate if REAR BRAKE AIR pressure gage reads below 65 psi (448 kPa). Rear axle braking will be provided by rear spring brakes for a limited time. Allow greater stopping distance. Discontinue vehicle operation as soon as possible. Failure to comply may result in serious injury or death to personnel.

(2) If REAR BRAKE AIR pressure gage (2) reads below 65 psi (448 kPa), REAR BRAKE AIR indicator (4) illuminates, and audible alarm (5) sounds:

(a) Leave additional distance between vehicles.

(b) Apply brake pedal (6) earlier than usual when slowing vehicle.

(c) Downshift to lower gear range using WTEC II TEPSS (7) or WTEC III TPSS (7).

(d) Notify Unit Maintenance as soon as possible.

2-67. EMERGENCY PROCEDURES (CONT)

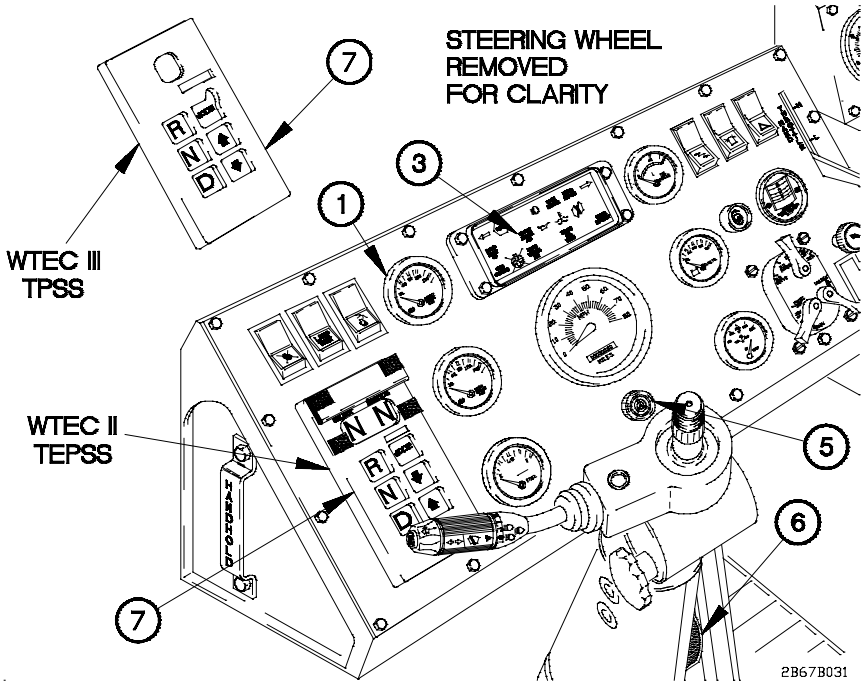

WARNING

Front axle service brakes will not operate if FRONT BRAKE AIR pressure gage reads below 65 psi (448 kPa). Allow greater stopping distance. Discontinue vehicle operation as soon as possible. Failure to comply may result in serious injury or death to personnel.

(3) If FRONT BRAKE AIR pressure gage (1) reads below 65 psi (448 kPa), FRONT BRAKE AIR indicator (3) illuminates and audible alarm (5) sounds:

(a) Leave additional distance between vehicles.

(b) Apply brake pedal (6) earlier than usual when slowing vehicle.

(c) Downshift to lower gear range using WTEC II TEPSS (7) or WTEC III TPSS (7).

(d) Notify Unit Maintenance as soon as possible.

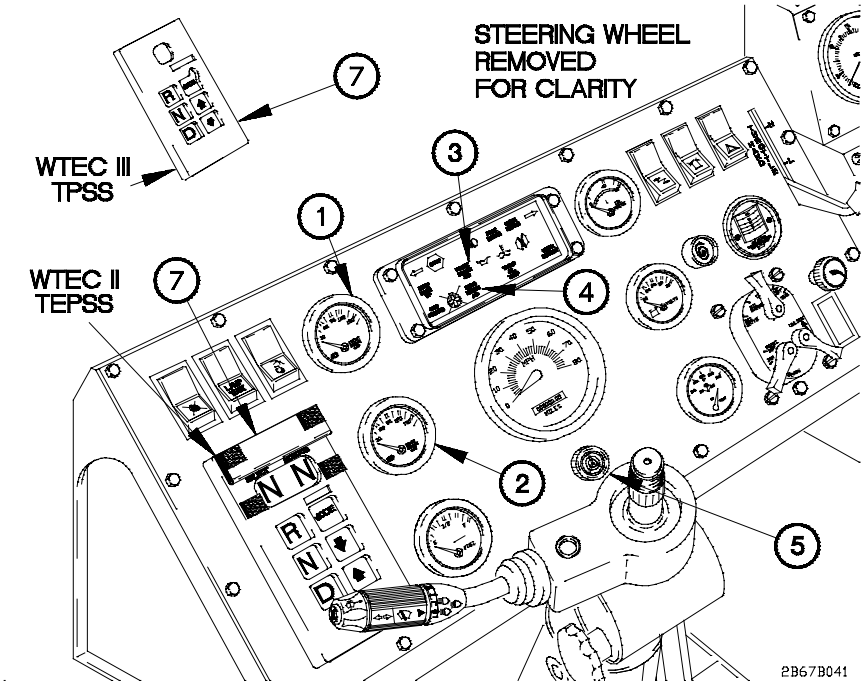

(4) If FRONT BRAKE AIR gage (1) and REAR BRAKE AIR pressure gage (2) read below 65 psi (448 kPa), FRONT BRAKE AIR indicator (3) and REAR BRAKE AIR indicator (4) illuminate, and audible alarm (5) sounds: ■

(a) Look for place to stop vehicle without blocking other traffic.

(b) Downshift to lower gear range using WTEC II TEPSS (7) or WTEC III TPSS (7) to control vehicle speed until place to stop is found.

(c) Stop vehicle.

(d) Notify Unit Maintenance.

2-67. EMERGENCY PROCEDURES (CONT)

c. MHC Operation After Electrical Failure (M1084/M1086 and M1089).

NOTE

Emergency MHC operation is the same for M1084/M1086 and M1089. M1084/M1086 MHC shown.

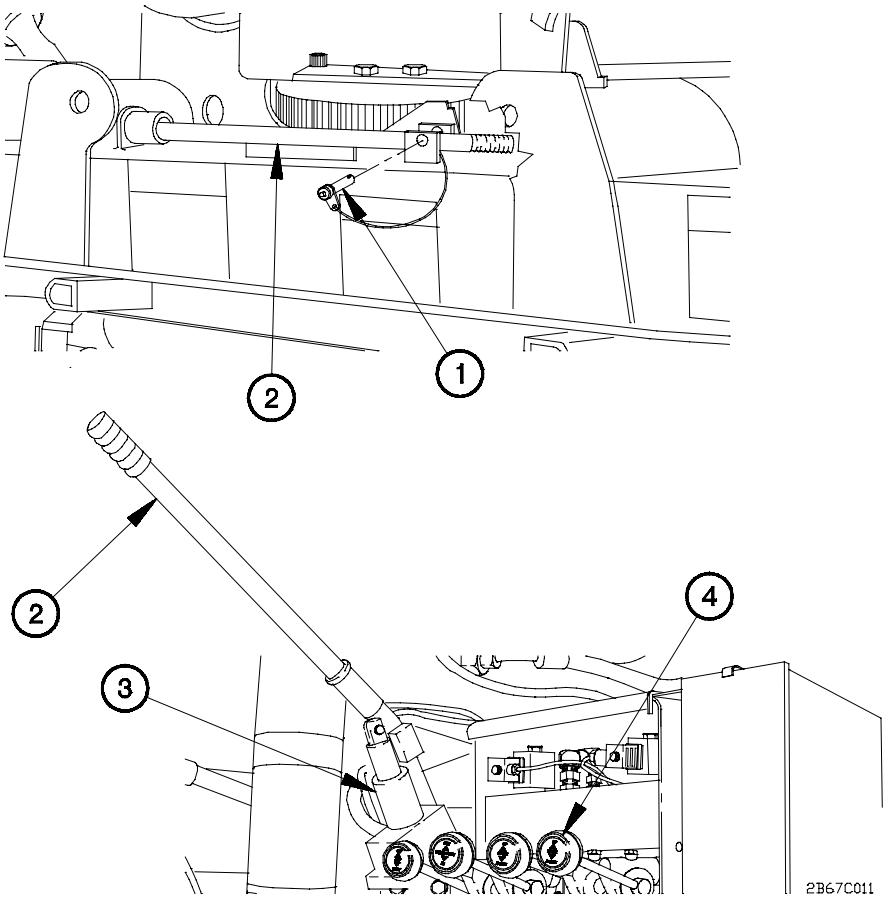

(1) Remove retaining pin (1) from pump handle (2).

(2) Remove pump handle (2) from stowed position.

(3) Install pump handle (2) in hydraulic pump (3).

(4) Place HOIST lever (4) in DOWN position and operate hydraulic pump (3) to lower load as required.

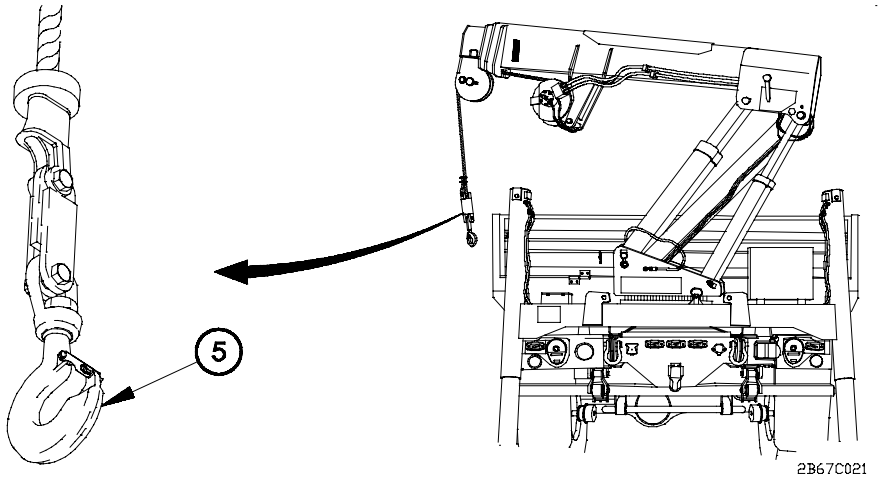

(5) Disconnect hook assembly (5) from load.

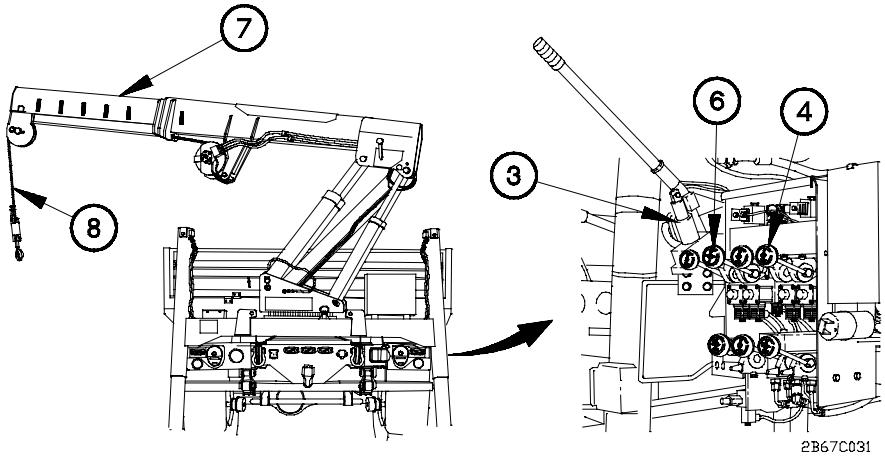

(6) Place TELESCOPE lever (6) in the IN position and operate hydraulic pump (3) to retract boom (7).

CAUTION

Reel in cable as required so that hook assembly will not contact cargo bed sides or jack cylinder. Failure to comply may result in damage to equipment.

(7) Place HOIST lever (4) in UP position and operate hydraulic pump (3) to reel in cable (8).

2-67. EMERGENCY PROCEDURES (CONT)

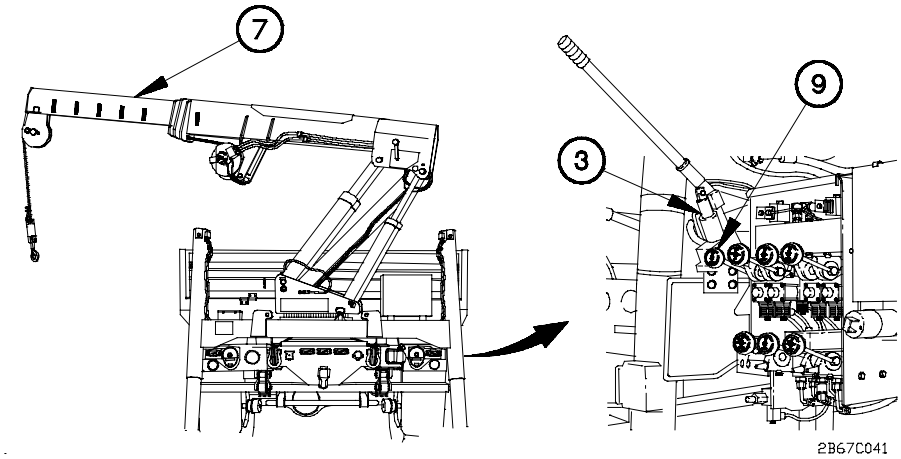

NOTE

Position boom so that cable and hook assembly are on driver's side of vehicle and turntable bearing pin holes are aligned.

(8) Place SWING lever (9) to CW or to CCW position as required and operate hydraulic pump (3) to rotate boom (7).

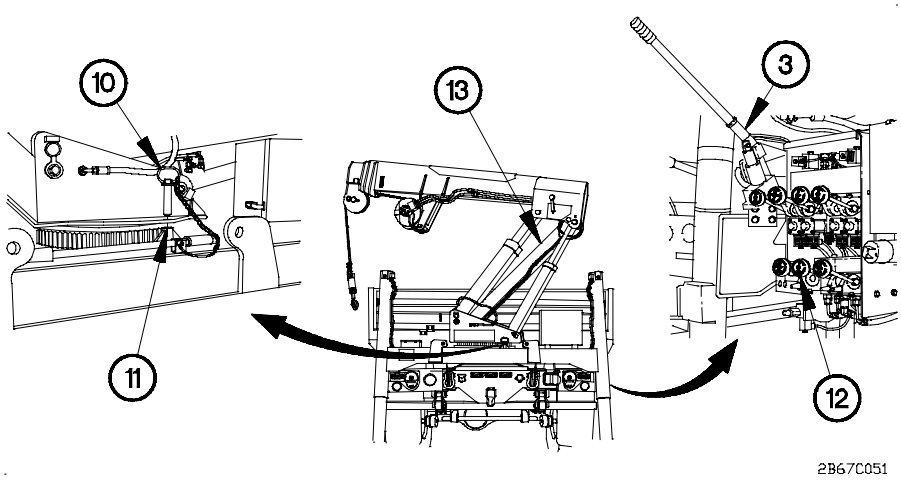

(9) Install pin (10) in turntable bearing (11).

(10) Place MAST lever (12) in DOWN position and operate hydraulic pump (3) to lower mast (13).

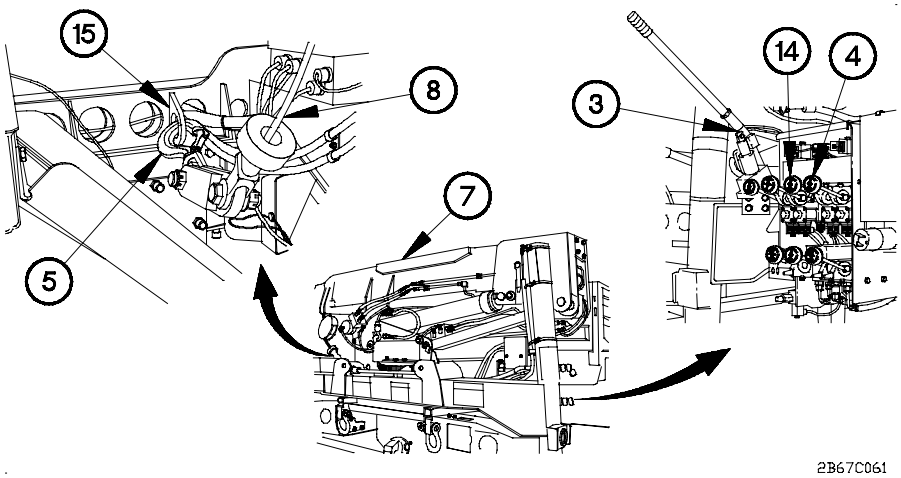

(11) Place BOOM lever (14) in DOWN position and operate hydraulic pump (3) to fully lower boom (7).

(12) Connect hook assembly (5) to stowage ring (15).

(13) Place HOIST lever (4) in UP position and operate hydraulic pump (3) to remove all slack from cable (8).

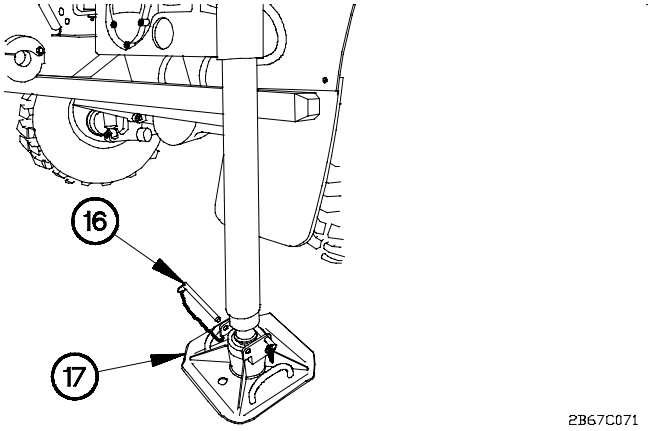

NOTE

Both outrigger pads are removed from outriggers the same way. Right outrigger shown.

(14) Remove two pins (16) from outrigger pads (17).

2-67. EMERGENCY PROCEDURES (CONT)

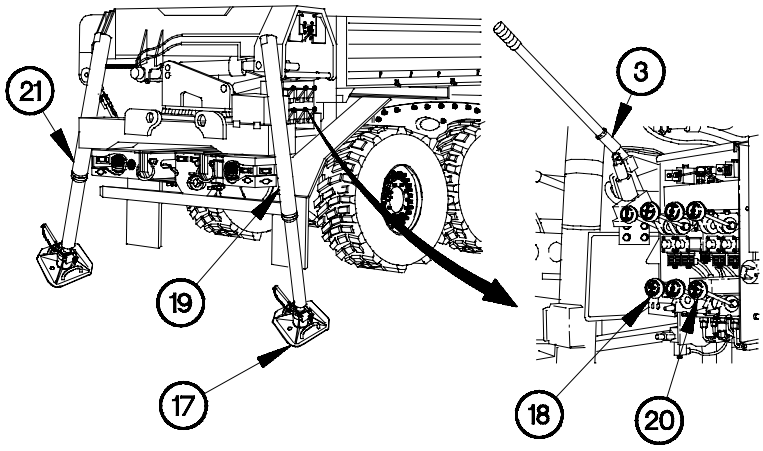

2B67C081

(15) Place LH O/R JACK lever (18) in UP position and operate hydraulic pump (3) to raise jack cylinder (19).

(16) Place RH O/R JACK lever (20) in UP position and operate hydraulic pump (3) to raise jack cylinder (21).

(17) Stow outrigger pads (17).

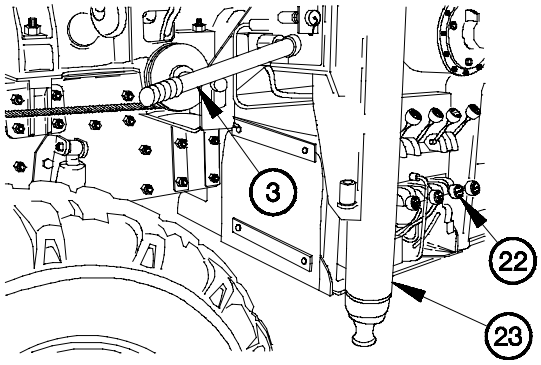

2B67C091

NOTE

Perform step (18) if operating M1089 MHC.

(18) Place O/R JACK lever (22) to IN position and operate hydraulic pump (3) to retract outriggers (23).

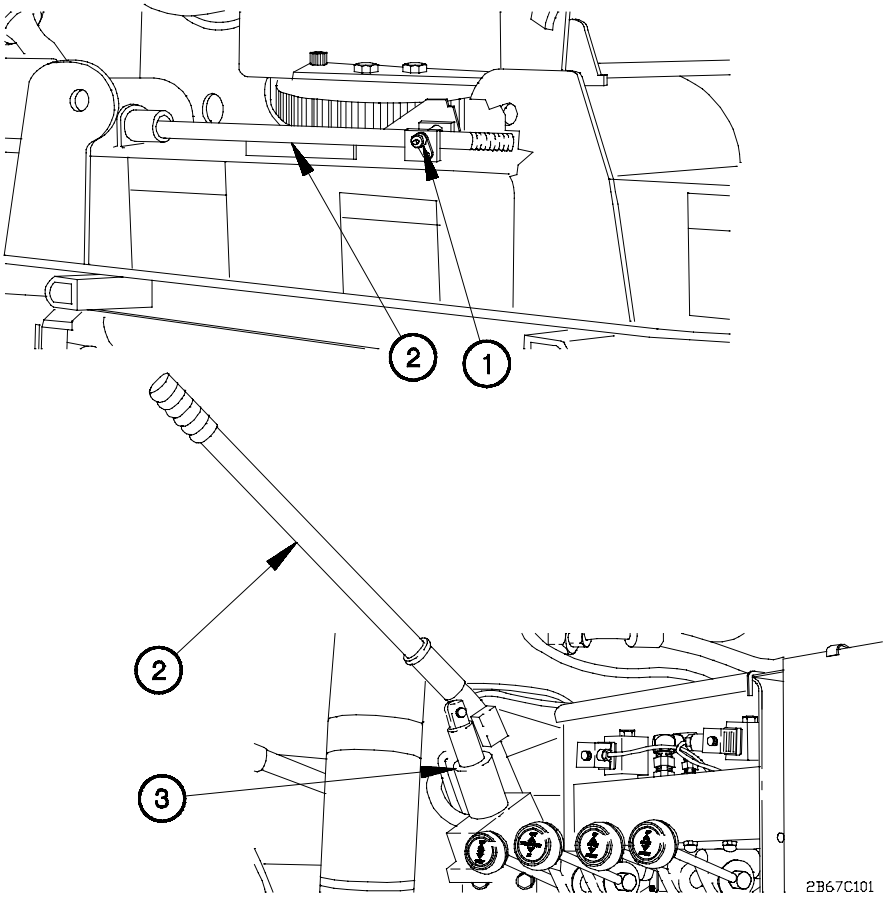

(19) Remove pump handle (2) from hydraulic pump (3).

(20) Stow pump handle (2).

(21) Install retaining pin (1) in pump handle (2).

2-67. EMERGENCY PROCEDURES (CONT)

d. Operating MHC Using MANUAL OVERRIDE Switch (M1084/M1086 and M1089).

WARNING

Use this procedure in the event of an emergency. Using the MANUAL OVERRIDE switch to operate the Material Handling Crane (MHC) defeats the overload shutdown circuits and allows the MHC to exceed the rated capacity. Failure to comply may result in serious injury or death to personnel or damage to equipment.

NOTE

All MHC functions, except overload lockouts, will operate normally when using the MANUAL OVERRIDE switch.

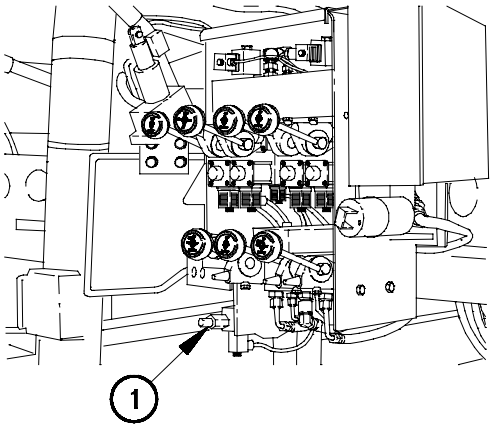

2B67D011

(1) Press and hold MANUAL OVERRIDE switch (1).

(2) Operate MHC as long as required to complete mission (para 2-37 or 2-50).

(3) Release MANUAL OVERRIDE switch (1).

(4) Notify Unit Maintenance of possible damage to MHC.

e. Nuclear, Biological, and Chemical (NBC) Decontamination.

Refer to TB 700-4 for nuclear, biological, and chemical (NBC) defense procedures. Refer to FM 3-5 for chemical, biological, and radiological (CBR) decontamination procedures.

f. Dump Truck Manual Release.

NOTE

This procedure is to be used in the event of electrical or pneumatic failure.

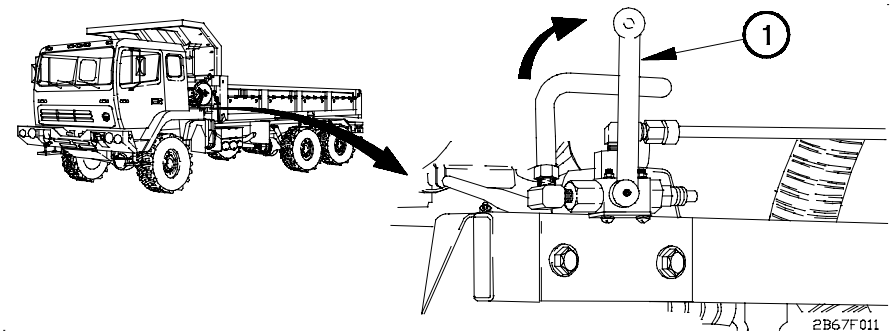

(1) Move handle (1) 90 degrees to the right.

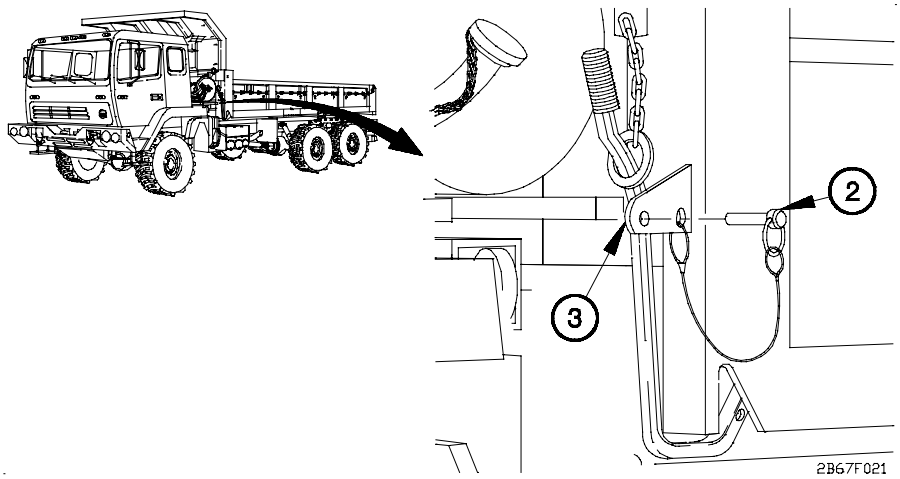

(2) Remove lock pin (2) from bracket (3).

2-67. EMERGENCY PROCEDURES (CONT)

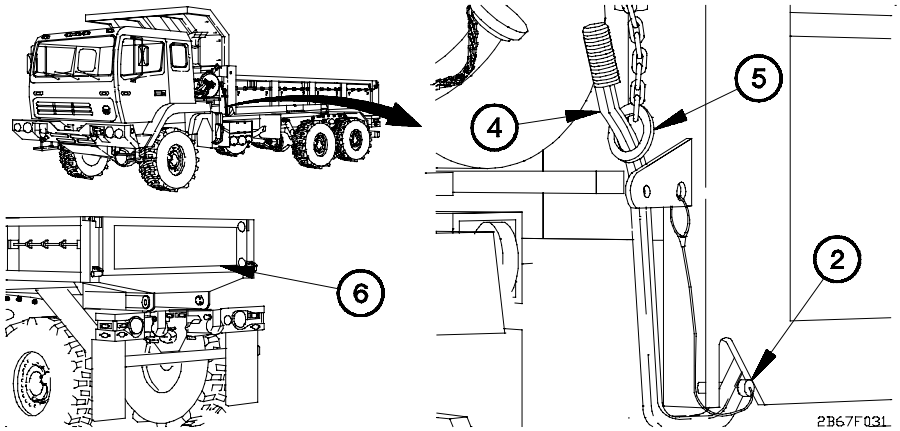

(3) Install pin (2) in handle (4).

(4) Remove safety ring (5) from handle (4).

(5) Pull handle (4) downward to unlock tailgate (6).

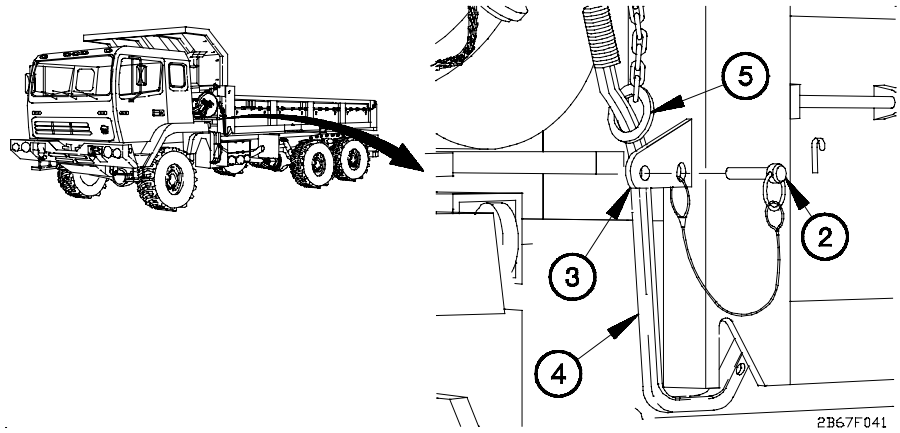

(6) Install safety ring (5) on handle (4).

(7) Remove pin (2) from handle (4).

(8) Install pin (2) in bracket (3).

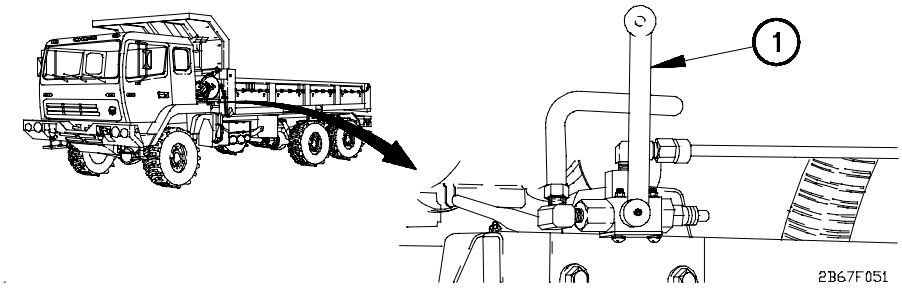

WARNING

Safety ring must be installed on handle and pin installed on bracket prior to moving handle to upright position. Failure to comply will result in injury to personnel.

(9) Move handle (1) to upright position.

2-68. PREPARATION FOR SHIPMENT

a. Land, Sea, and Air Shipment.

Instructions for shipment of the vehicle by land, sea, and air are contained in the following publications:

MTMCTEA Pam 56-1	Marine Terminal Lifting Guidance
MTMCTEA Pam 55-19	Tiedown Handbook for Rail Movements
MTMCTEA Ref 92-55-20	Tiedown Handbook for Truck Movements
FM 10-526	Airdrop of Supplies and Equipment: Rigging 5-Ton Trucks
FM 55-450-3	Multi-service Helicopter External Air Transport: Basic Operations and Equipment
FM 55-450-4	Multi-service Helicopter External Air Transport: Single-Point Load Rigging Procedures
FM 55-450-5	Multi-service Helicopter External Air Transport: Dual-Point Load Rigging Procedures
TB 55-46-1	Standard Characteristics (Dimensions, Weight, and Cube) for Transportability of Military Vehicles and Other Outsize/Overweight Equipment (in TOE Line Item Number Sequence)

2-68. PREPARATION FOR SHIPMENT (CONT)

b. Preparation of Internal Air Transport Procedure.

The Preparation for Internal Air Transport procedure for reducing cab height is contained in para 2-69.

c. Tie Down and Helicopter-Lift.

Vehicle Tie Down and Helicopter-Lift instructions are contained on Model Weight and Dimensional Data Plates (para 2-53).

d. Preparation for Air Drop.

Perform M1093/M1094 Air Drop Preparation (para 3-10 or 3-12).

e. Preparation for Highway or Rail Shipment.

Cab air springs must be deflated and pinned for shipment (para 2-69b). Upon arrival at destination cab air springs must be unpinned and inflated (para 2-69g).

2-69. PREPARATION FOR INTERNAL AIR TRANSPORT

a. Front Tire Deflation.

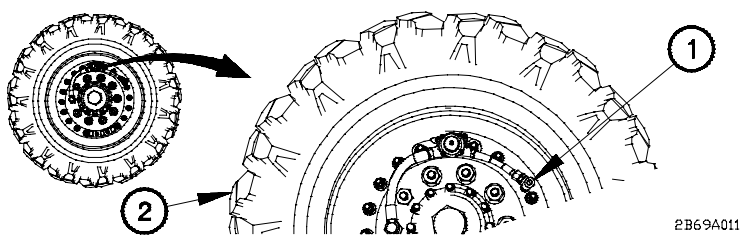

NOTE

- Left and right front tires are deflated the same way. Left front tire shown.
- Tires will deflate until approximately 10 psi (69 kPa) remains in tire (except M1089).
- M1089 tires will deflate until approximately 12 psi (83 kPa) remains in tire.
- Some resistance may be felt when turning kneeling valve. Valve will not operate properly if it is not turned 1/2 turn (180 degrees).

Turn kneeling valve (1) 1/2 turn to left (180 degrees) to release air from front tire (2).

b. Cab Air Spring Deflation.

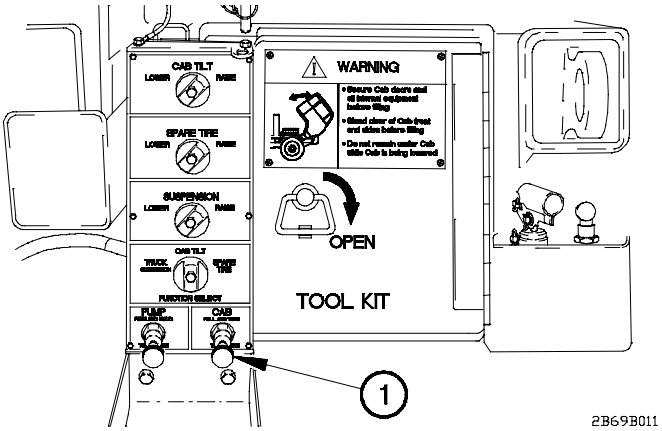

(1) Turn CAB knob (1) to the left and pull out.

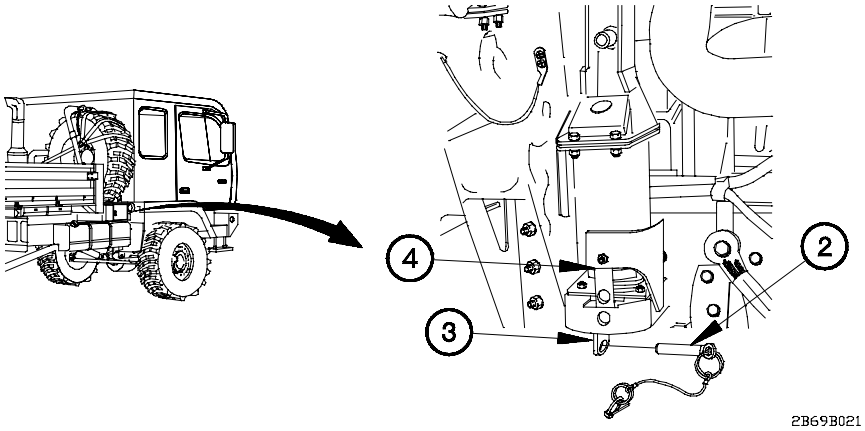

NOTE

Left and right side cab air springs are deflated the same way. Right side cab air spring shown.

(2) Remove quick release pin (2) from bracket (3).

(3) Install quick release pin (2) in cab air spring bracket (4).

(4) Perform steps (2) and (3) on left side of vehicle.

2-69. PREPARATION FOR INTERNAL AIR TRANSPORT (CONT)

c. Compressing Suspension.

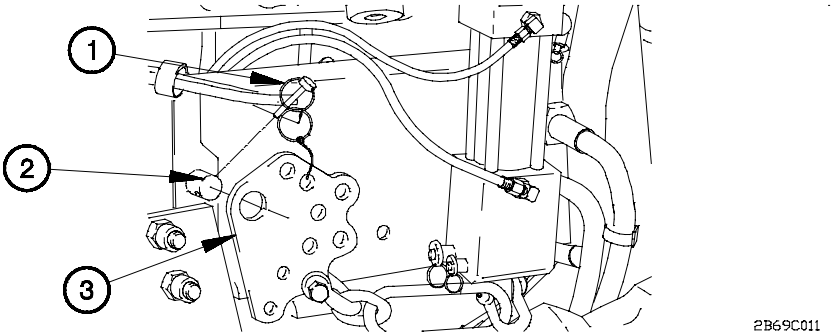

NOTE

Left and right side suspension compression plates are removed the same way. Right side suspension compression plate shown.

(1) Start engine (para 2-27a or b).

(2) Raise cab (para 2-28a).

(3) Remove retaining pin (1) from stud (2).

(4) Remove suspension compression plate (3) from stud (2).

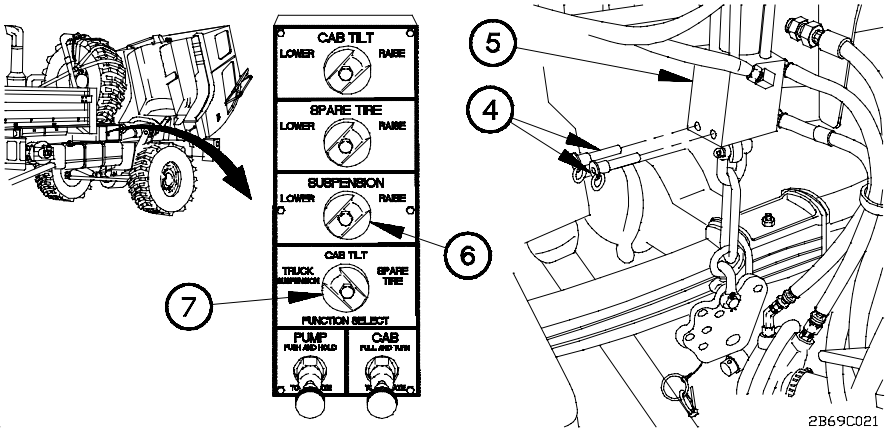

(5) Remove two safety pins (4) from compression cylinder (5).

(6) Perform steps (3) through (5) on left side of vehicle.

(7) Turn SUSPENSION knob (6) to the RAISE position.

(8) Turn FUNCTION SELECT knob (7) to the TRUCK SUSPENSION position.

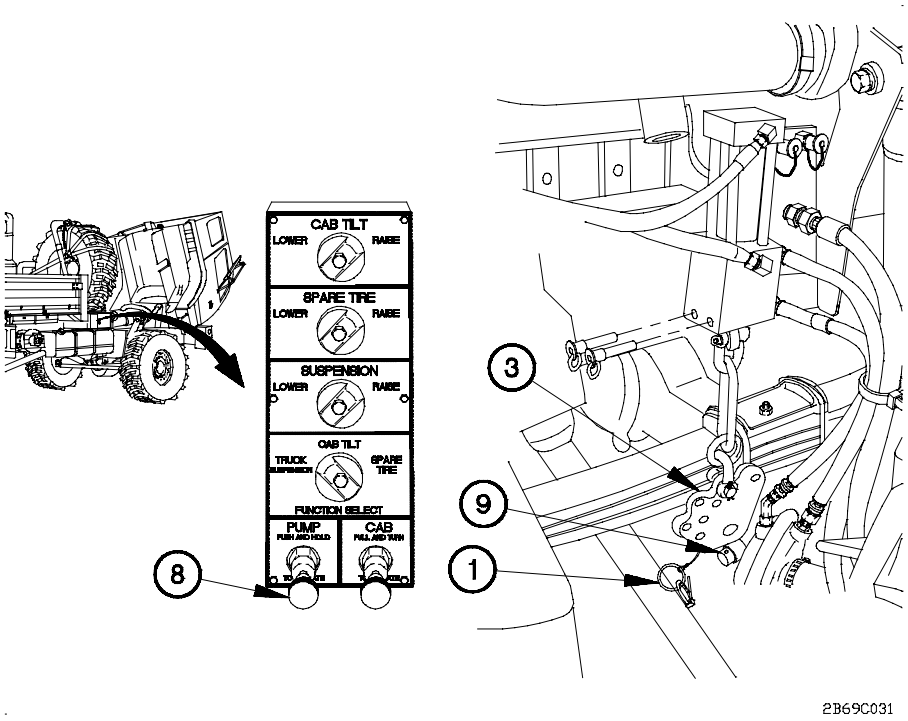

NOTE

Use back-up hydraulic pump (para 2-52) if pressing PUMP knob does not accomplish step (9).

(9) Press and hold PUMP knob (8) until suspension compression plate (3) can be installed on axle stud (9).

WARNING

Both suspension compression plates must be installed on axle studs. Failure to comply may result in serious injury or death to personnel.

NOTE

Left and right side suspension compression plates are installed on axle studs the same way. Right side shown.

(10) Install suspension compression plate (3) on axle stud (9).

(11) Install pin (1) in axle stud (9).

(12) Perform steps (10) and (11) on left side of vehicle.

2-69. PREPARATION FOR INTERNAL AIR TRANSPORT (CONT)

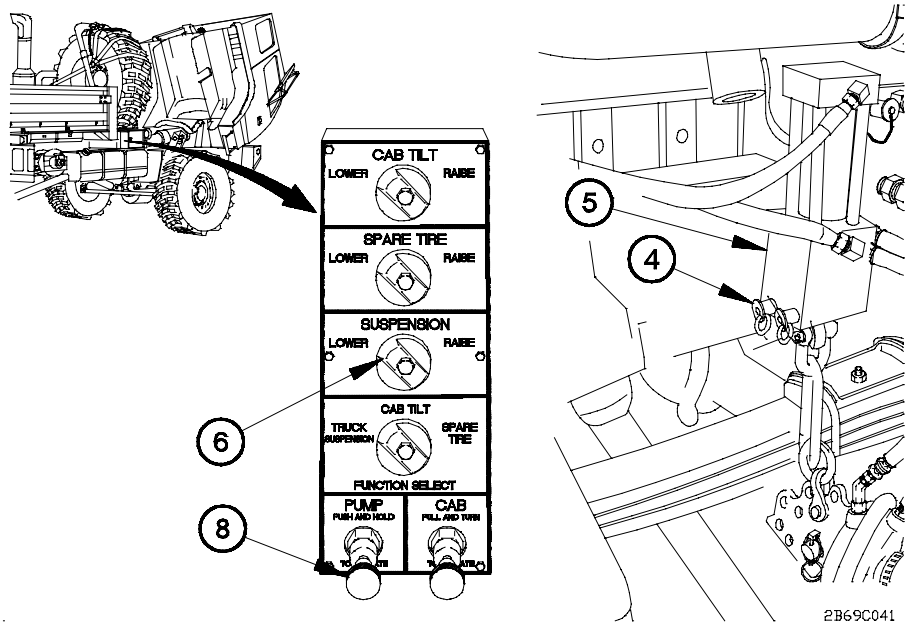

NOTE

- Suspension is fully compressed when cylinder rod is fully retracted and safety pins can be installed in compression cylinder.
- Use back-up hydraulic pump (para 2-52) if pressing PUMP knob does not accomplish step (14).

(13) Turn SUSPENSION knob (6) to the LOWER position.

(14) Press and hold PUMP knob (8) until suspension is fully compressed.

(15) Install two safety pins (4) in compression cylinder (5).

(16) Perform step (15) on left side of vehicle.

(17) Lower cab (para 2-28b).

(18) Shut down engine (para 2-27f).

d. Folding Mirrors.

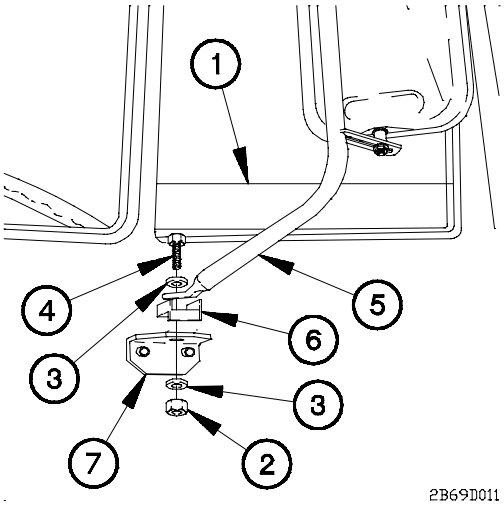

NOTE

Left and right side mirrors are folded the same way. Left side mirror shown.

(1) Roll window (1) down completely.

(2) Remove nut (2), two washers (3), and screw (4) from mirror assembly (5).

(3) Remove clip (6) from bracket (7).

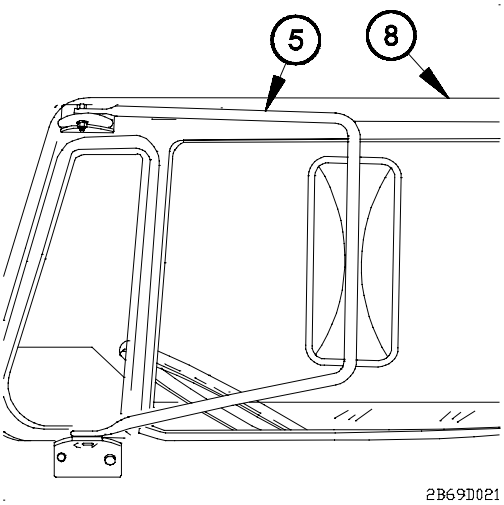

(4) Fold mirror assembly (5) in toward door (8).

2-69. PREPARATION FOR INTERNAL AIR TRANSPORT (CONT)

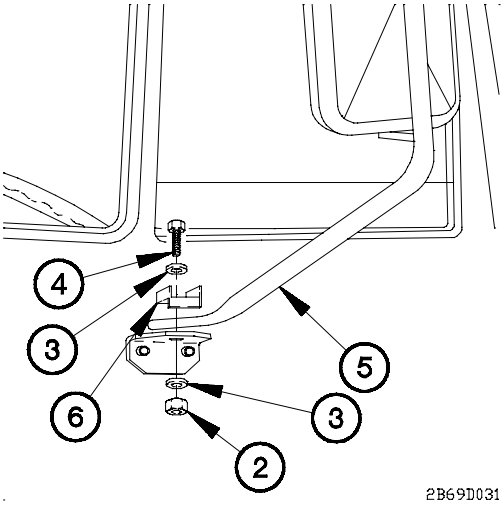

(5) Install clip (6), two washers (3), screw (4), and nut (2) on mirror assembly (5).

(6) Perform steps (1) through (5) on right side of vehicle.

e. Unfolding Mirrors.

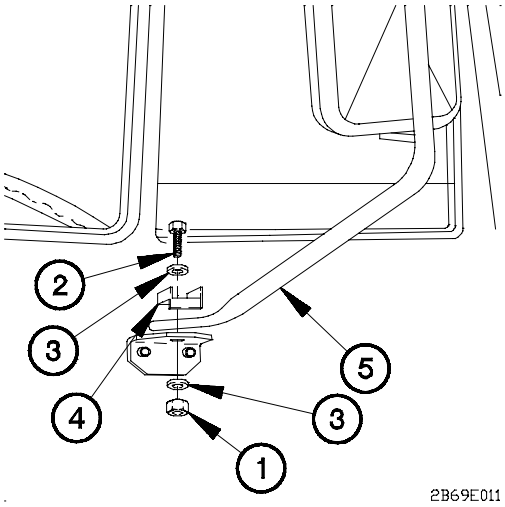

NOTE

Left and right side mirrors are unfolded the same way. Left side mirror shown.

(1) Remove nut (1), screw (2), two washers (3), and clip (4) from mirror assembly (5).

(2) Unfold mirror assembly (5).

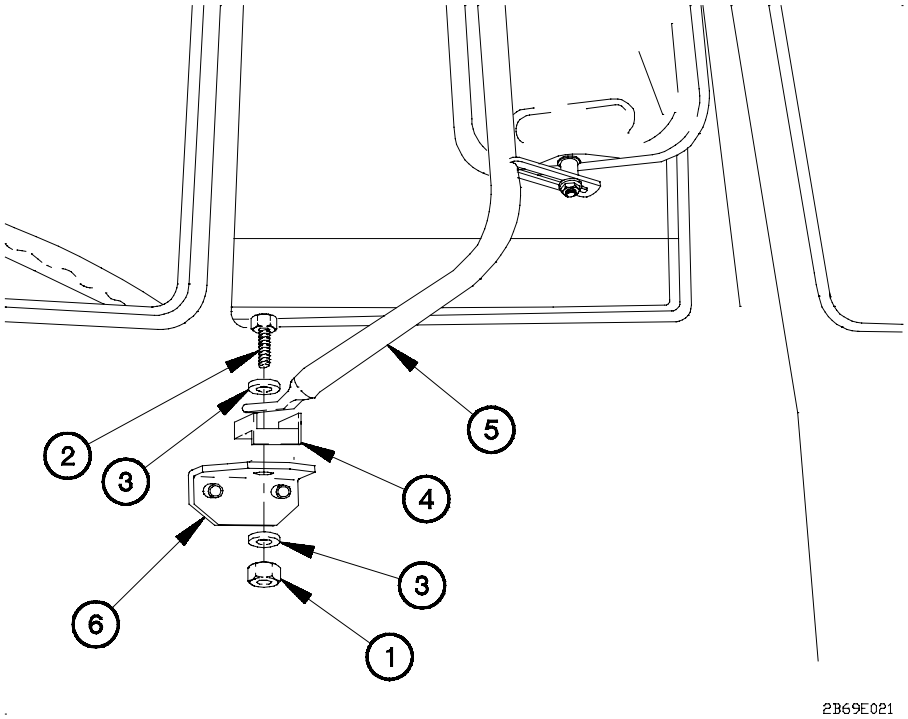

(3) Install clip (4) between mirror assembly (5) and bracket (6).

NOTE

Notify Unit Maintenance that nuts need to be tightened to 21-27 lb-ft (29-37 N·m).

(4) Install two washers (3), screw (2), and nut (1).

(5) Perform steps (1) through (4) on right side of vehicle.

f. Decompressing Suspension.

(1) Start engine (para 2-27a or b).

(2) Raise cab (para 2-28a).

2-69. PREPARATION FOR INTERNAL AIR TRANSPORT (CONT)

CAUTION

- Ensure area above cab is adequate before raising suspension. Failure to comply may result in damage to equipment.
- Do not operate vehicle off road without both air springs unpinned and deflated. Failure to comply may result in damage to equipment.

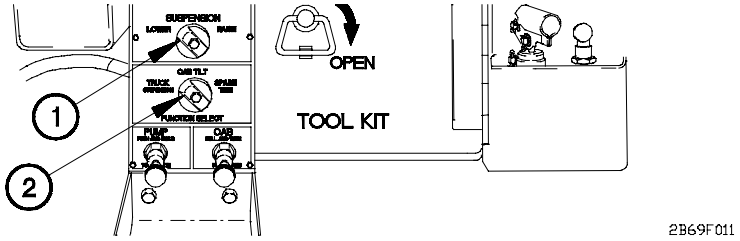

(3) Turn SUSPENSION knob (1) to the LOWER position.

(4) Turn FUNCTION SELECT knob (2) to the TRUCK SUSPENSION position.

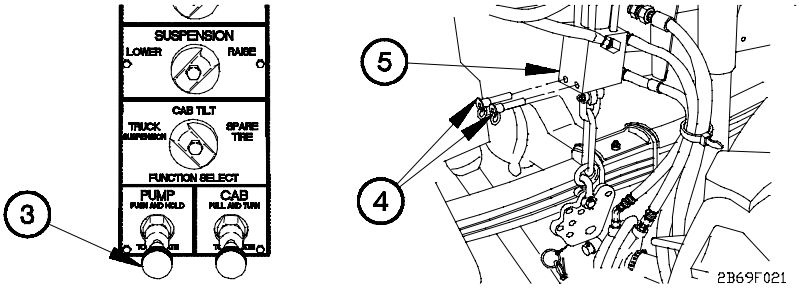

NOTE

Use back-up hydraulic pump (para 2-52) if pressing PUMP knob does not accomplish step (5).

(5) Press and hold PUMP knob (3) until two safety pins (4) can be removed from compression cylinder (5).

NOTE

Left and right side safety pins are removed from compression cylinders the same way. Right side safety pins shown.

(6) Remove two safety pins (4) from compression cylinder (5).

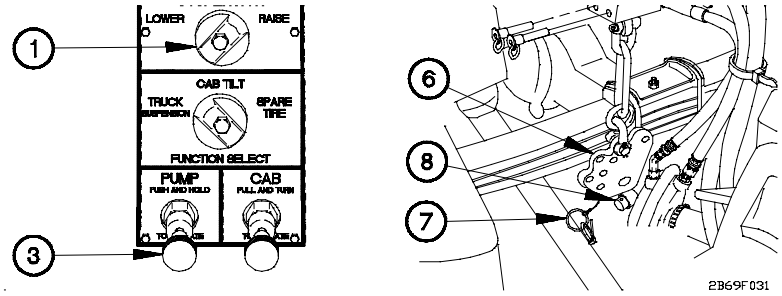

(7) Turn SUSPENSION knob (1) to the RAISE position.

NOTE

Use back-up hydraulic pump (para 2-52) if pressing PUMP knob does not accomplish step (8).

(8) Press and hold PUMP knob (3) until vehicle returns to normal height and suspension compression plate (6) is loose.

(9) Remove pin (7) from axle stud (8).

WARNING

Both suspension compression plates must be installed on axle studs. Failure to comply may result in serious injury or death to personnel.

NOTE

Left and right side suspension compression plates are removed the same way. Right side suspension compression plate shown.

(10) Remove suspension compression plate (6) from axle stud (8).

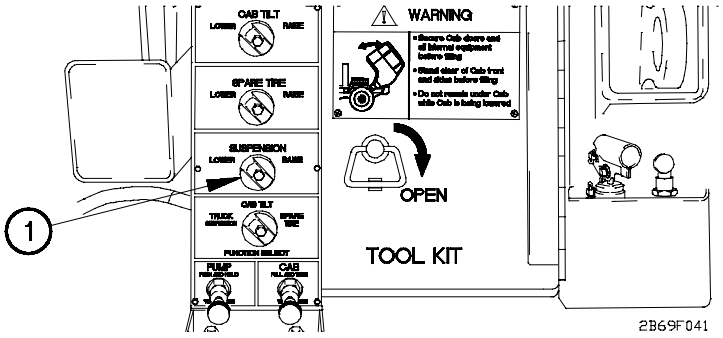

(11) Turn SUSPENSION knob (1) to the LOWER position.

2-69. PREPARATION FOR INTERNAL AIR TRANSPORT (CONT)

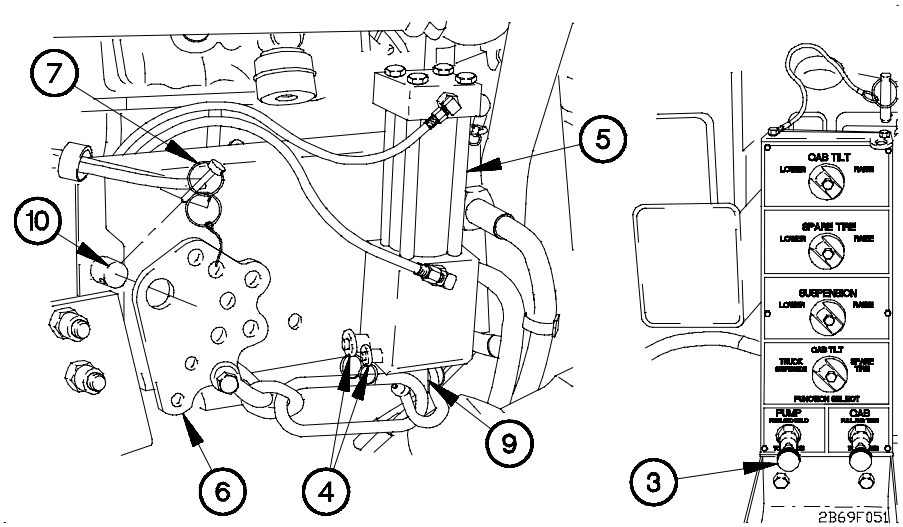

NOTE

Use back-up hydraulic pump (para 2-52) if pressing PUMP knob does not accomplish step (12).

(12) Press PUMP knob (3) until cylinder rod (9) is fully retracted and two safety pins (4) can be inserted in compression cylinder (5).

NOTE

Left and right side suspension compression plates are installed the same way. Right side suspension compression plate shown.

(13) Install two safety pins (4) in compression cylinder (5).

(14) Install suspension compression plate (6) on stud (10).

(15) Install retaining pin (7) in stud (10).

(16) Lower cab (para 2-28b).

(17) Shut down engine (para 2-27f).

g. Cab Air Spring Inflation.

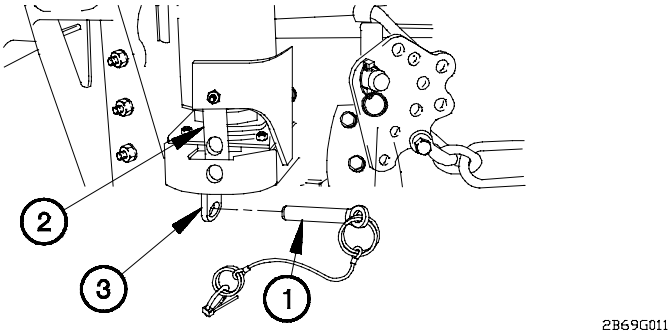

CAUTION

Do not operate vehicle off-road without both air springs unpinned and deflated. Failure to comply may result in damage to equipment.

NOTE

Left and right side cab air springs are inflated the same way. Right side cab air spring shown.

(1) Remove quick release pin (1) from air spring (2).

(2) Install quick release pin (1) in air spring bracket (3).

(3) Perform steps (1) and (2) on left side of vehicle.

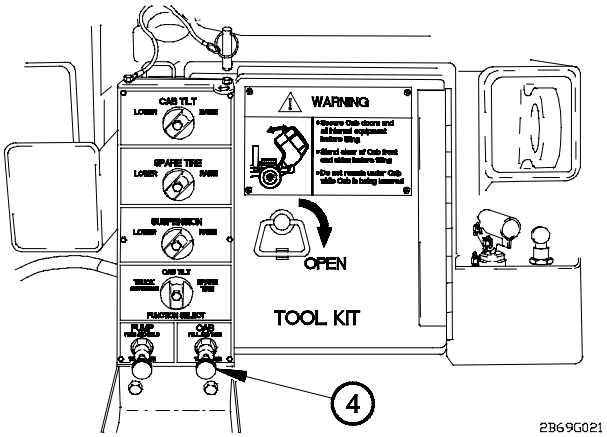

(4) Press and turn CAB knob (4) to the right.

2-69. PREPARATION FOR INTERNAL AIR TRANSPORT (CONT)

h. Front Tire Inflation.

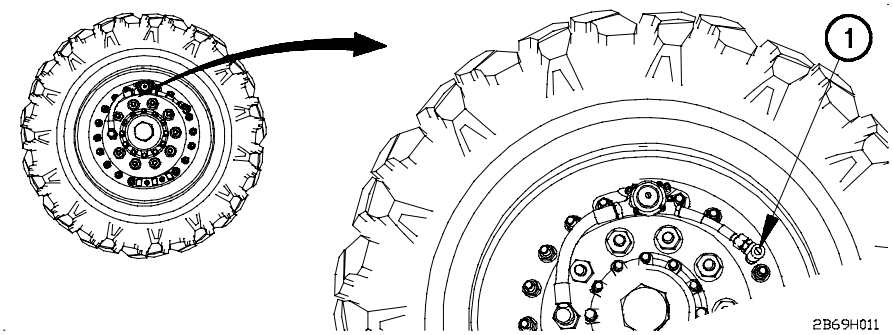

NOTE

- Drive vehicle clear of aircraft before performing this procedure.
- Left and right front tires are inflated the same way. Left front tire shown.

(1) Turn kneeling valve (1) 1/2 turn to right to fully close valve.

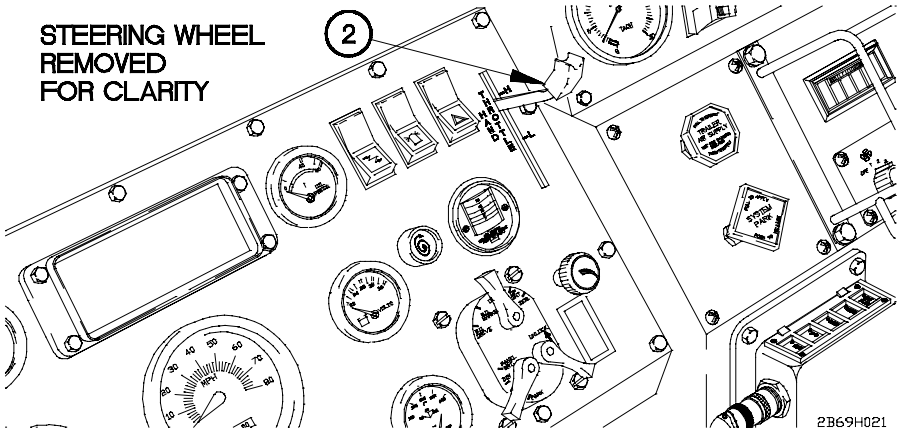

(2) Start engine (para 2-27a or b).

NOTE

In the event of a tachometer failure a HAND THROTTLE lever positioned to H is approximately 2,000-2,200 rpm.

(3) Set engine speed to 2,000-2,200 rpm or place HAND THROTTLE lever (2) to H.

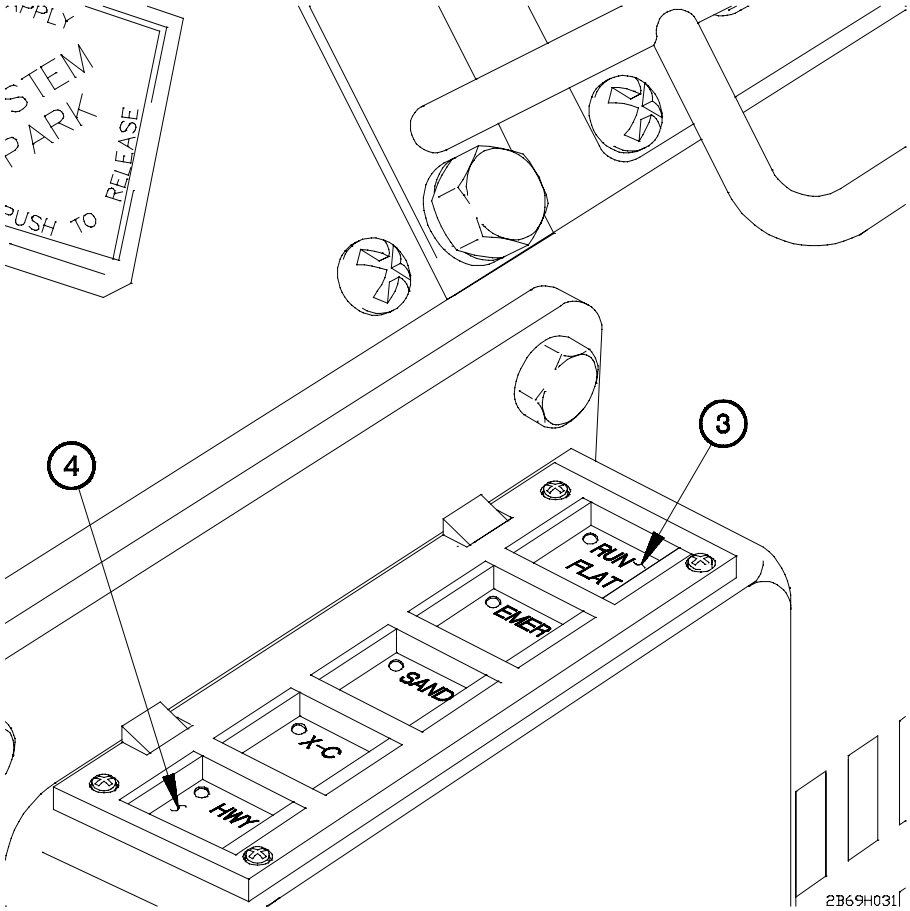

C

Vehicle may be driven while tires are inflating, but is restricted to first gear and on smooth surfaces. Failure to comply may result in damage to equipment.

NOTE

After one minute of inflation any gear range/speed may be selected and no terrain restriction exists.

(4) Press RUN FLAT (3) and HIGHWAY (4) modes at same time (para 2-30c).

2-70. RAPID ENGINE WARM-UP

WARNING

Wear arctic clothing when cab temperatures fall and remain below 30°F (-1°C). Cold stress preventative measures in FM 21-10 should be applied when vehicle cab temperatures fall and remain below 30°F (-1°C). Failure to comply may result in serious injury or death to personnel.

CAUTION

This procedure is intended for use under extreme or unusual conditions, such as heavy windshield frost or when it is difficult to achieve normal operating temperatures. Failure to comply may result in damage to equipment.

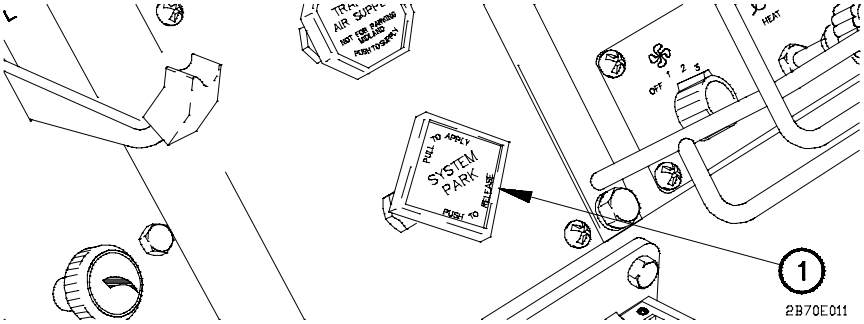

(1) Install wheel chocks (para 2-21h).

(2) Pull out SYSTEM PARK control (1).

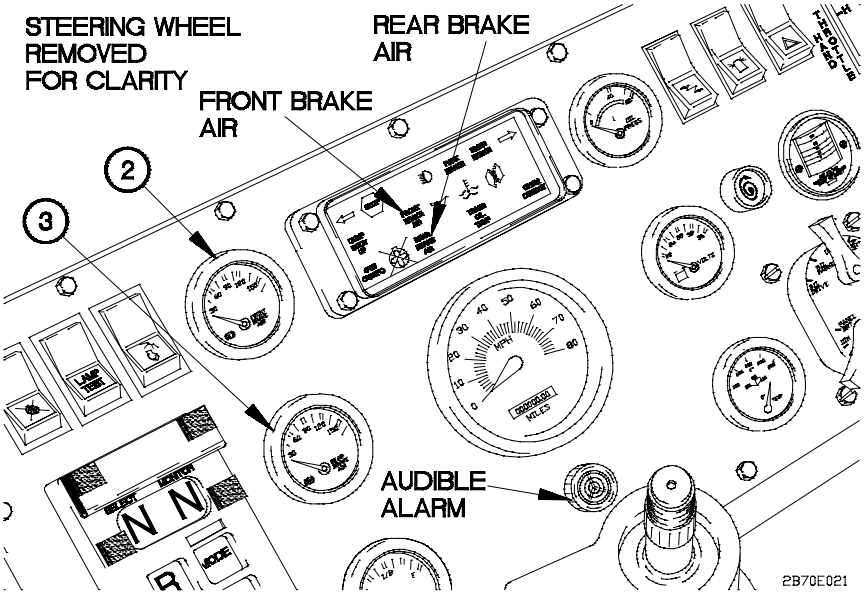

NOTE

FRONT BRAKE AIR indicator and REAR BRAKE AIR indicator illuminate (red) and audible alarm will sound until FRONT BRAKE AIR and REAR BRAKE AIR pressure gages reach approximately 65 psi (448 kPa).

(3) Check that FRONT BRAKE AIR pressure gage (2) and REAR BRAKE AIR pressure gage (3) read between 65-120 psi (448-827 kPa).

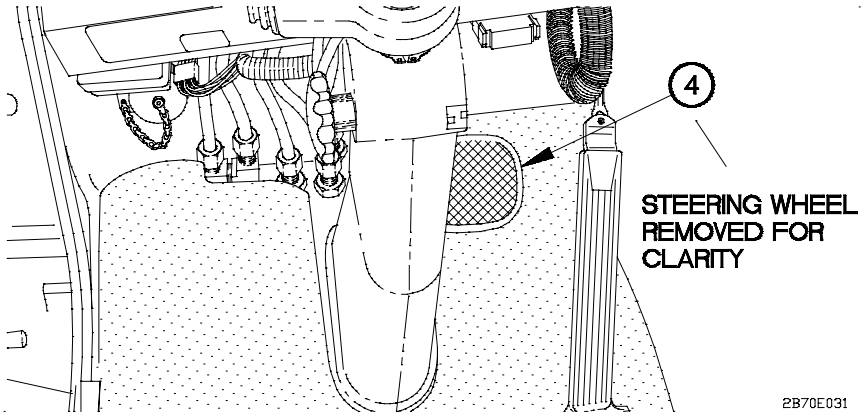

(4) Depress brake pedal (4).

2-70. RAPID ENGINE WARM-UP (CONT)

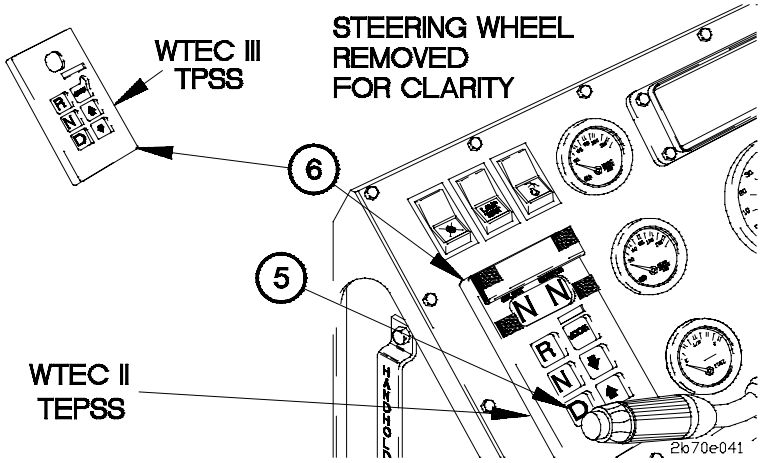

WARNING

- **Do not leave vehicle without first returning HAND THROTTLE lever to full down position and placing transmission in Neutral. Failure to comply may result in serious injury or death to personnel.**

- **Brake pedal must be held down and personnel kept clear of vehicle path while WTEC II Transmission ECU Pushbutton Shift Selector (TEPSS) or WTEC III Transmission Pushbutton Shift Selector (TPSS) is in DRIVE. Transmission will sometimes shift into third gear when in cold operation. Transmission will shift into second when engine reaches operating temperature 165° F (74°C) on WATER TEMP gage) causing the vehicle to lurch or move forward. The vehicle cannot move if SYSTEM PARK is engaged and the brake pedal is held down. Failure to comply may result in serious injury or death to personnel.**

CAUTION

If TRANS OIL TEMP indicator illuminates during engine warmup, shut down engine immediately. Failure to comply may result in damage to equipment.

(5) Select D for DRIVE (5) on WTEC II TEPSS (6) or WTEC III TPSS (6).

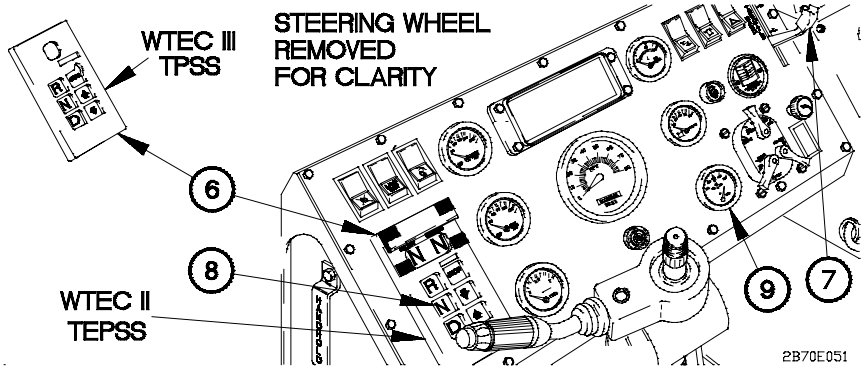

CAUTION

Time limits must be followed to prevent overheating. Failure to comply may result in damage to equipment.

NOTE

In the event of a tachometer failure a HAND THROTTLE lever positioned to L is approximately 1,250 to 1,450 rpm.

(6) Set engine speed to 1,250 to 1,450 rpm or place HAND THROTTLE lever (7) to L for two minutes maximum.

(7) Set engine speed to idle (750 rpm) or place HAND THROTTLE lever (7) to full down position.

(8) Select N for NEUTRAL (8) on WTEC II TEPSS (6) or WTEC III TPSS (6) and allow engine to idle (750 rpm) for two minutes minimum.

NOTE

- Vehicle performance, including heater/defroster, will be reduced when engine operating temperature is between 100° F to 165° F (38° C to 74° C). Avoid conditions requiring maximum performance until WATER TEMP gage reaches 165° F (74° C).

- If WATER TEMP gage does not show 165° F (74° C) within 20 minutes, notify Unit Maintenance.

(9) Repeat steps (5) through (8) until WATER TEMP gage (9) reaches 165° F (74° C) maximum, or 100° F (38° C) minimum to begin driving.

2-71. PREPARATION FOR MACHINE GUN OPERATION

a. Raise Machine Gun Platform.

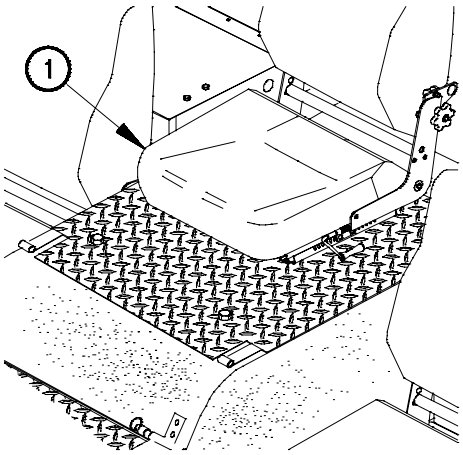

(1) Fold center seat (1) up.

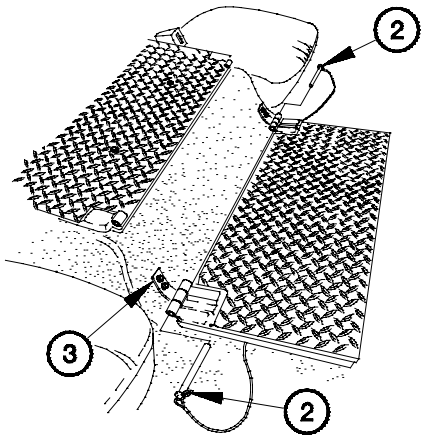

CAUTION

Lower platform must be securely pinned to stowage bracket or upper platform. Failure to comply may result in damage to equipment.

(2) Disconnect two quick release pins (2) from storage brackets (3).

2-71. PREPARATION FOR MACHINE GUN OPERATION (CONT)

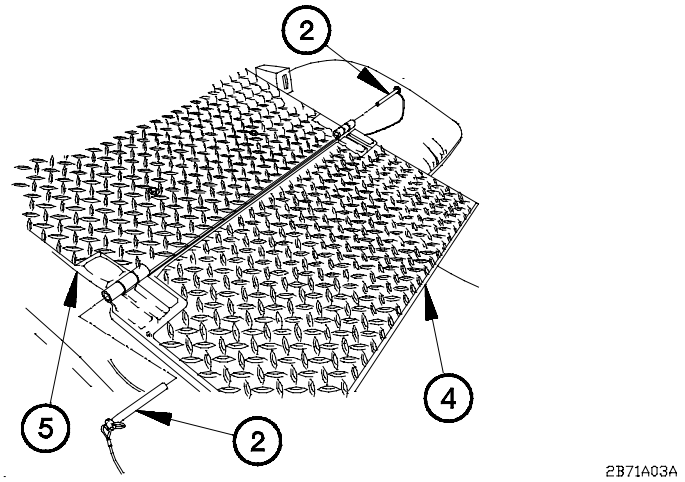

CAUTION

Ensure that quick release pins go completely through hinges on both lower and upper platforms. Failure to comply may result in damage to equipment.

(3) Connect lower platform (4) to upper platform (5) with two quick release pins (2).

b. Stow Machine Gun Ring Platform.

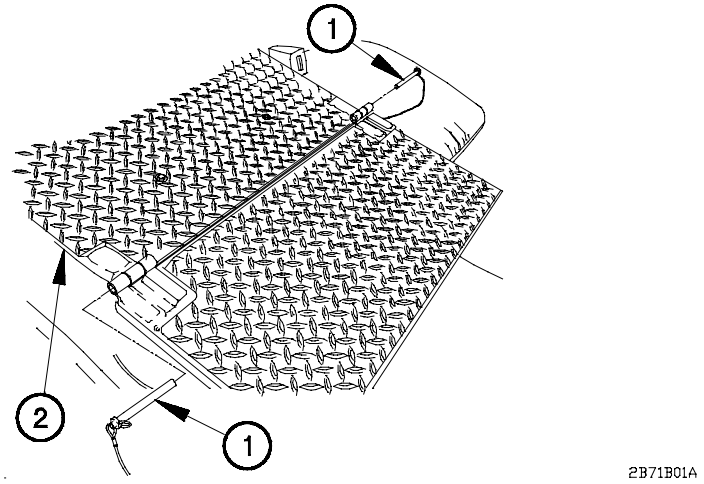

(1) Disconnect two quick release pins (1) from upper platform (2).

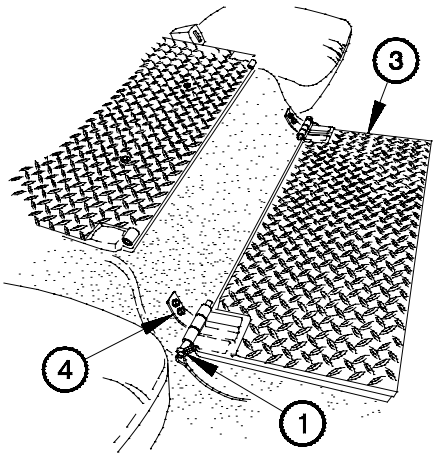

CAUTION

Lower platform must be securely pinned to stowage bracket or upper platform. Failure to comply may result in damage to equipment.

(2) Connect lower platform (3) to storage brackets (4) with two quick release pins (1).

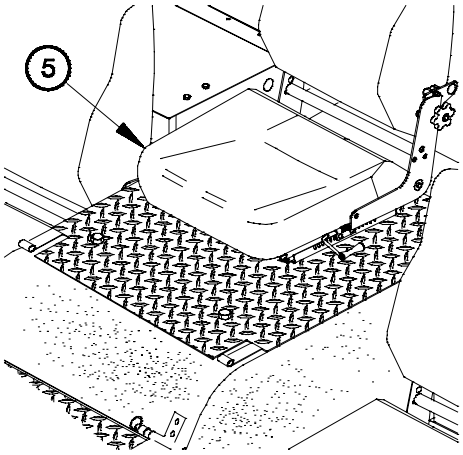

(3) Fold center seat (5) down.

2-72. HYDRAULIC SYSTEM OPERATION (M1089 TO M1089)

a. Connecting Service Vehicle Hydraulic Power.

NOTE

The M1089 to M1089 hydraulic system procedure provides hydraulic power to a disabled vehicle to stow deployed equipment, stifflegs, underlift assembly, 30K winch cables, 15K Self-Recovery Winch (SRW) cable, or Material Handling Crane (MHC), and prepare the vehicle for transportation.

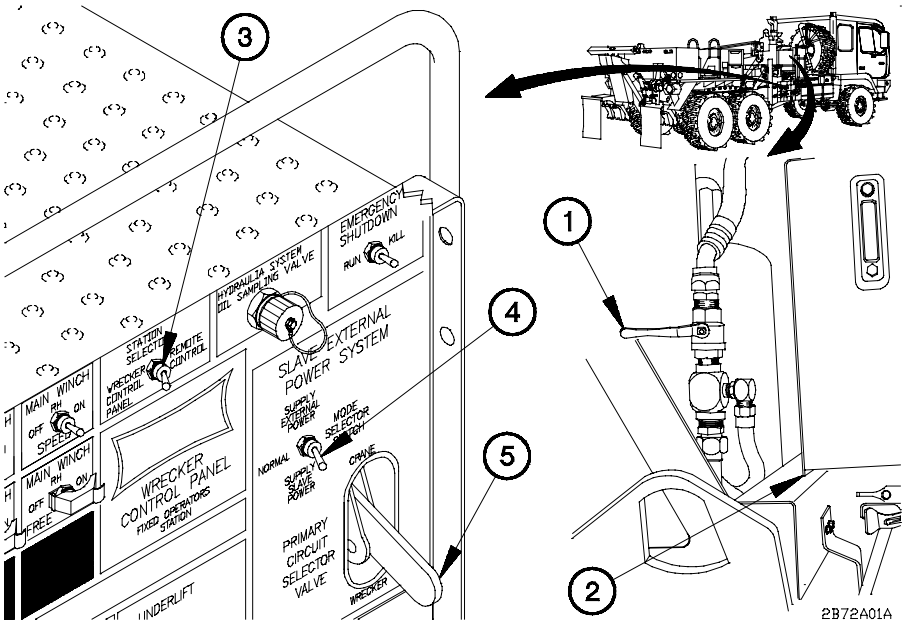

(1) Position service vehicle next to disabled vehicle with front of service vehicle toward rear of disabled vehicle.

(2) Shut down engine of service vehicle (para 2-27f).

(3) Close return valve (1) to hydraulic tank (2) on service vehicle and disabled vehicle.

(4) Position STATION SELECTOR SWITCH (3) on service vehicle and disabled vehicle to WRECKER CONTROL PANEL.

(5) Position MODE SELECTOR SWITCH (4) on service vehicle to SUPPLY SLAVE POWER.

(6) Position PRIMARY CIRCUIT SELECTOR VALVE (5) on service vehicle to WRECKER.

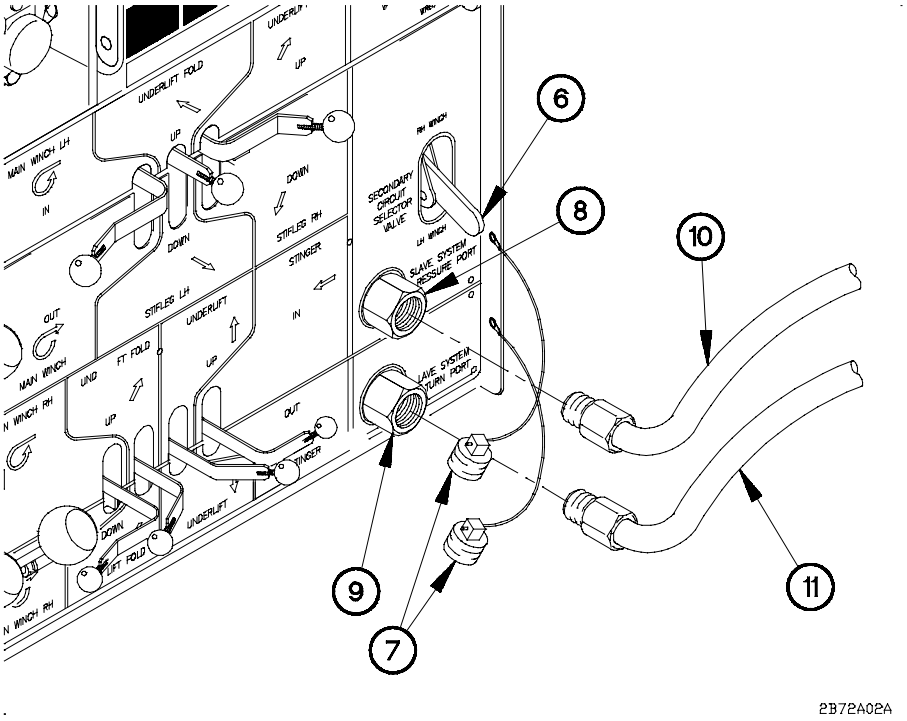

(7) Position SECONDARY CIRCUIT SELECTOR VALVE (6) on service vehicle to LH WINCH.

(8) Remove two caps (7) from SLAVE SYSTEM PRESSURE PORT (8) and SLAVE SYSTEM RETURN PORT (9) on service vehicle.

(9) Connect hydraulic hose (10) to SLAVE SYSTEM PRESSURE PORT (8) on service vehicle.

(10) Connect hydraulic hose (11) to SLAVE SYSTEM RETURN PORT (9) on service vehicle.

(11) Remove two caps (7) from SLAVE SYSTEM PRESSURE PORT (8) and SLAVE SYSTEM RETURN PORT (9) on disabled vehicle.

(12) Connect hydraulic hose (10) to SLAVE SYSTEM PRESSURE PORT (8) on disabled vehicle.

(13) Connect hydraulic hose (11) to SLAVE SYSTEM RETURN PORT (9) on disabled vehicle.

2-72. HYDRAULIC SYSTEM OPERATION (M1089 TO M1089) (CONT)

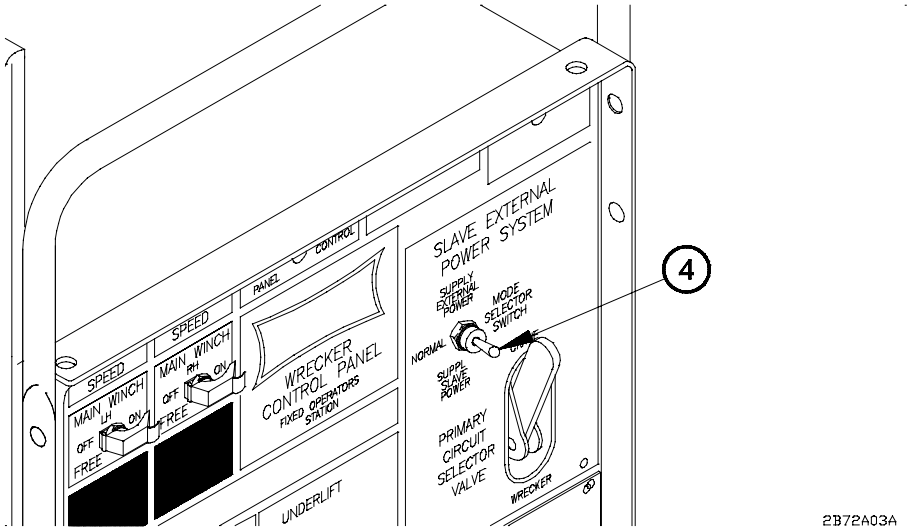

(14) Position MODE SELECTOR SWITCH (4) on disabled vehicle to NORMAL.

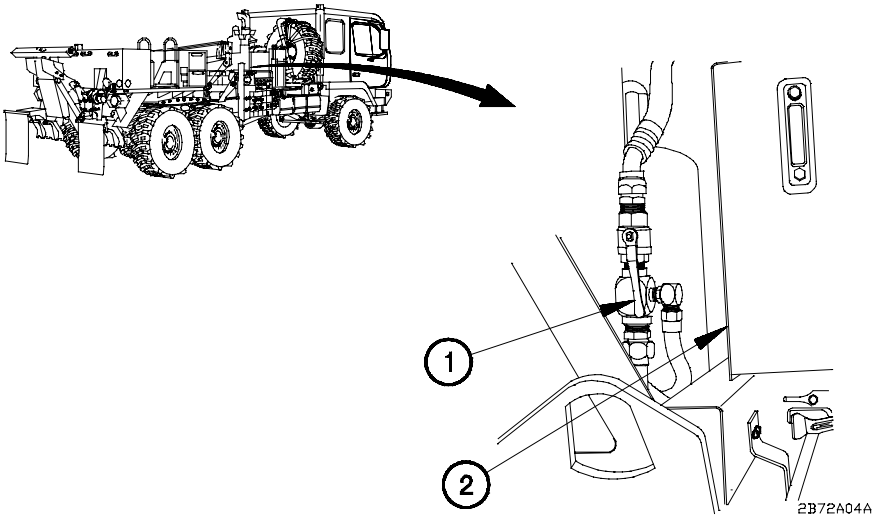

(15) Open return valve (1) to hydraulic tank (2) on service vehicle.

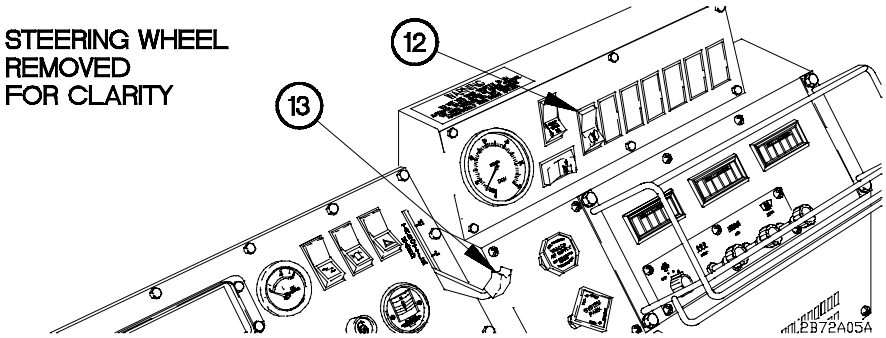

(16) Start engine of service vehicle (para 2-27a or b).

(17) Position PTO switch (12) to on.

CAUTION

Keep tachometer within 1,250-1,450 rpm when Power Take-Off (PTO) is engaged. Failure to comply may result in damage to equipment.

NOTE

In the event of a tachometer failure a HAND THROTTLE lever positioned to L is approximately 1,250-1,450 rpm.

(18) Set engine speed to 1,250-1,450 rpm or place HAND THROTTLE lever (13) to L.

b. Operation of Disabled Vehicle Hydraulic Systems.

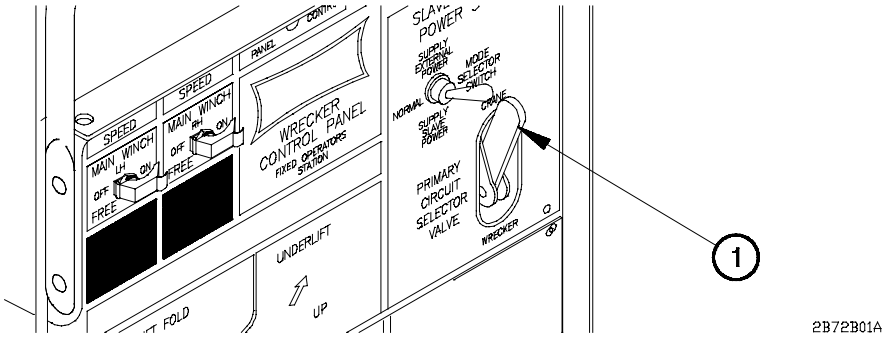

NOTE

Perform steps (1) and (2) if disabled vehicle MHC must be stowed.

(1) On disabled vehicle, position PRIMARY CIRCUIT SELECTOR VALVE (1) to CRANE.

(2) Stow MHC (para 2-50).

2-72. HYDRAULIC SYSTEM OPERATION (M1089 TO M1089) (CONT)

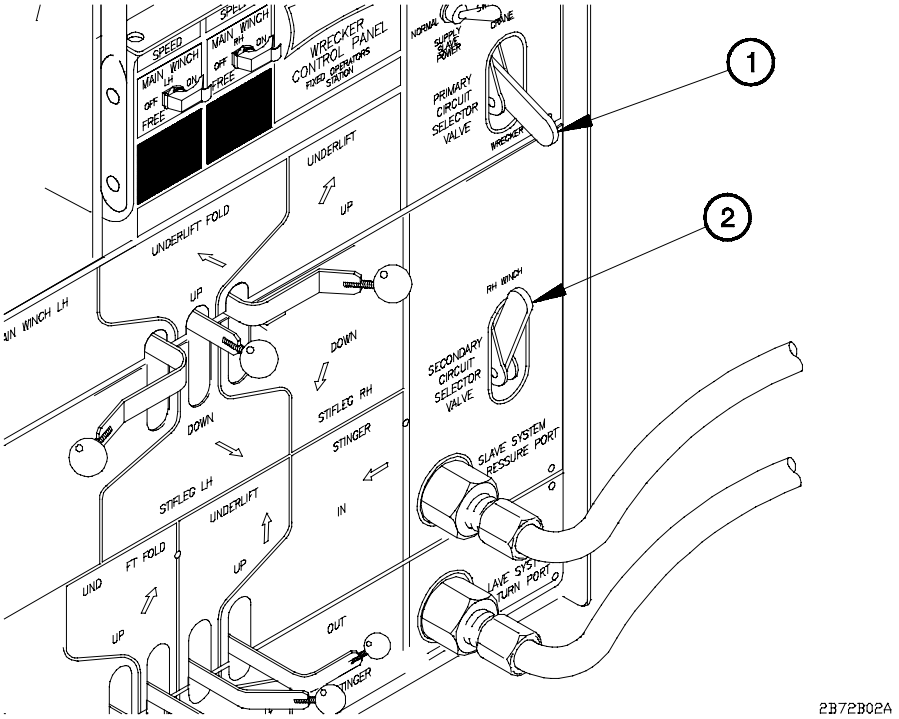

NOTE

- Perform steps (3), (4), and (5) if disabled vehicle RH 30K winch cable must be recovered.
- Perform steps (3), (4), and (6) if disabled vehicle underlift assembly must be stowed.

(3) On disabled vehicle, position PRIMARY CIRCUIT SELECTOR VALVE (1) to WRECKER.

(4) On disabled vehicle, position SECONDARY CIRCUIT SELECTOR VALVE (2) to RH WINCH.

(5) Operate RH 30K winch to reel in cable (para 2-42).

(6) Stow underlift assembly (para 2-44).

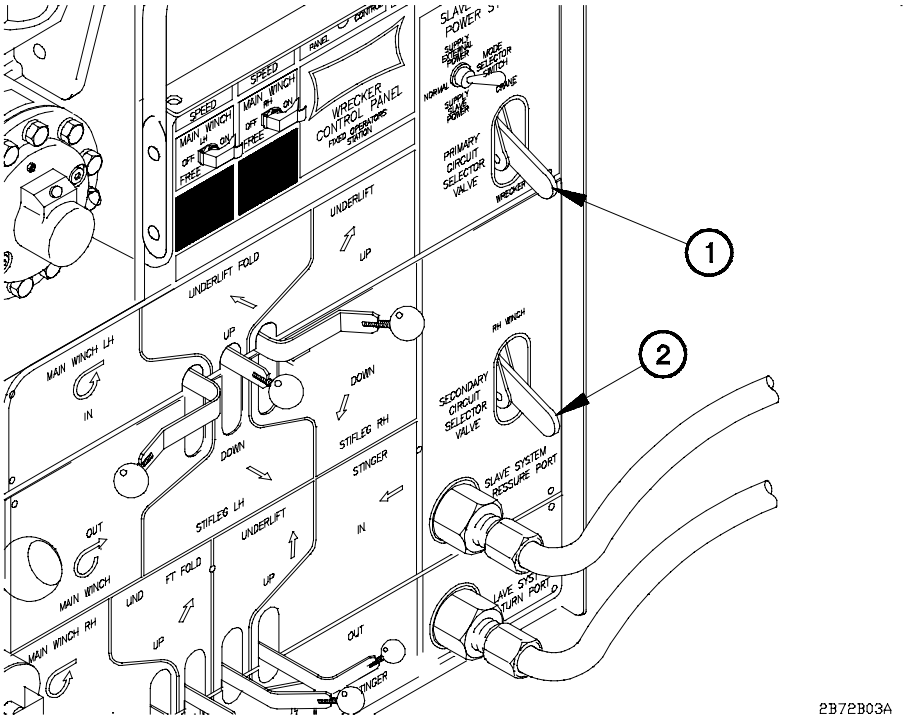

NOTE

- Perform steps (7), (8), and (9) if disabled vehicle LH 30K winch cable must be recovered.
- Perform steps (7), (8), and (10) if disabled vehicle LH or RH stiffleg must be raised.
- Perform steps (7), (8), and (11) if disabled vehicle 15K SRW cable must be recovered.

(7) On disabled vehicle, position PRIMARY CIRCUIT SELECTOR VALVE (1) to WRECKER.

(8) On disabled vehicle, position SECONDARY CIRCUIT SELECTOR VALVE (2) to LH WINCH.

(9) Operate LH 30K winch to reel in cable (para 2-42).

(10) Operate LH or RH stiffleg to raise stiffleg (para 2-41c).

(11) Operate 15K SRW to reel in cable (para 2-65c).

2-72. HYDRAULIC SYSTEM OPERATION (M1089 TO M1089) (CONT)

c. Disconnecting Service Vehicle Hydraulic Power.

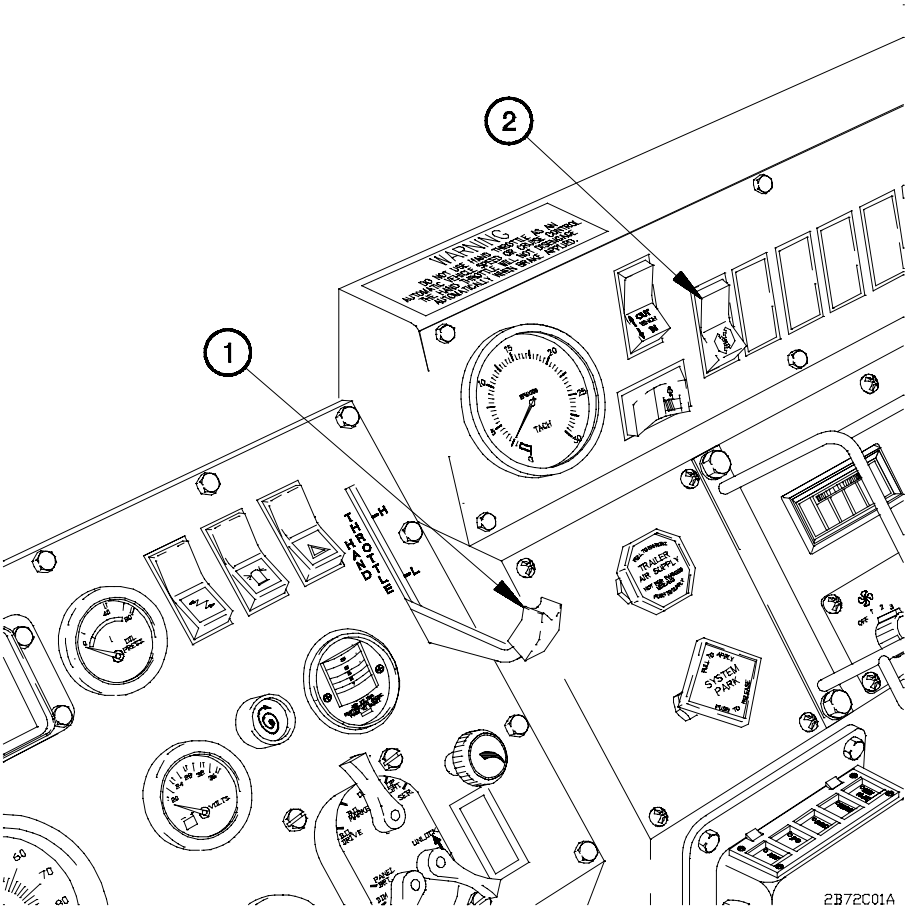

(1) Set engine speed to idle (750 rpm) by decreasing HAND THROTTLE lever (1) to full down position.

(2) Position PTO switch (2) to off.

(3) Shut down engine of service vehicle (para 2-27f).

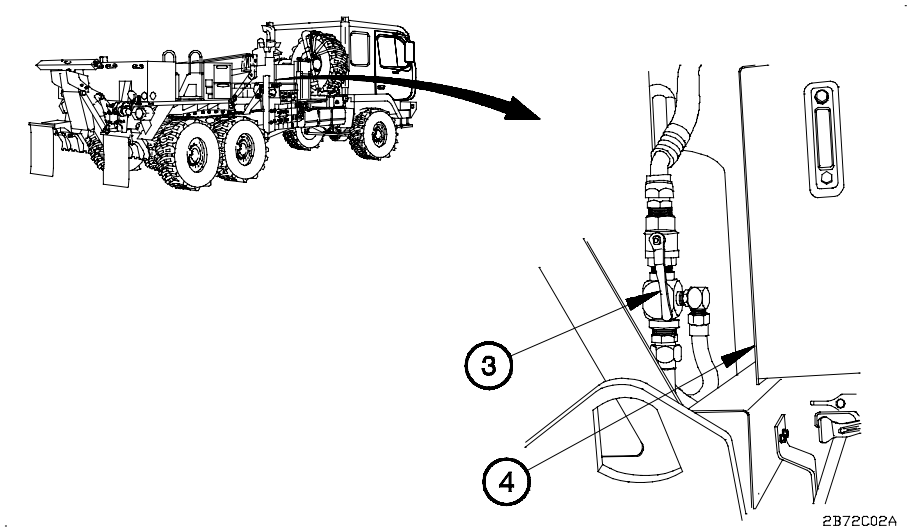

(4) Close return valve (3) to hydraulic tank (4) on service vehicle.

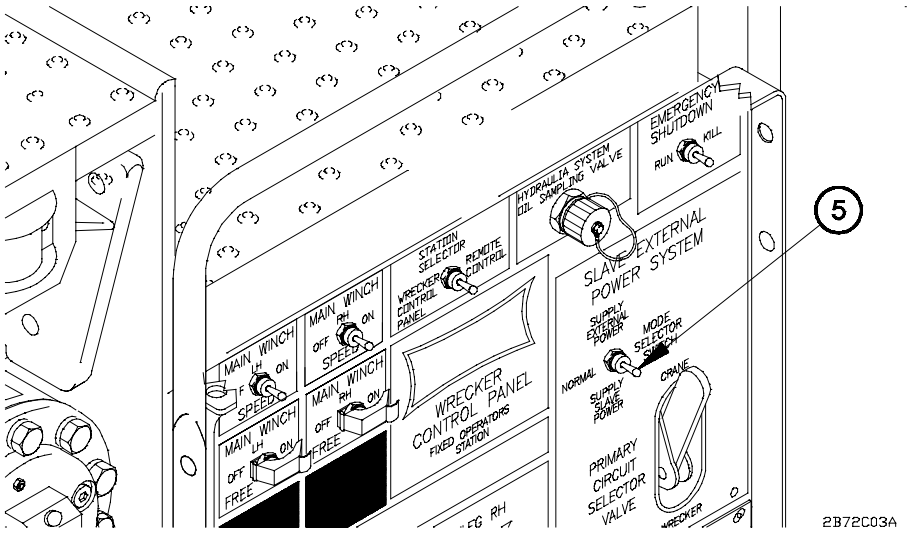

(5) Position MODE SELECTOR SWITCH (5) on service vehicle to NORMAL.

2-72. HYDRAULIC SYSTEM OPERATION (M1089 TO M1089) (CONT)

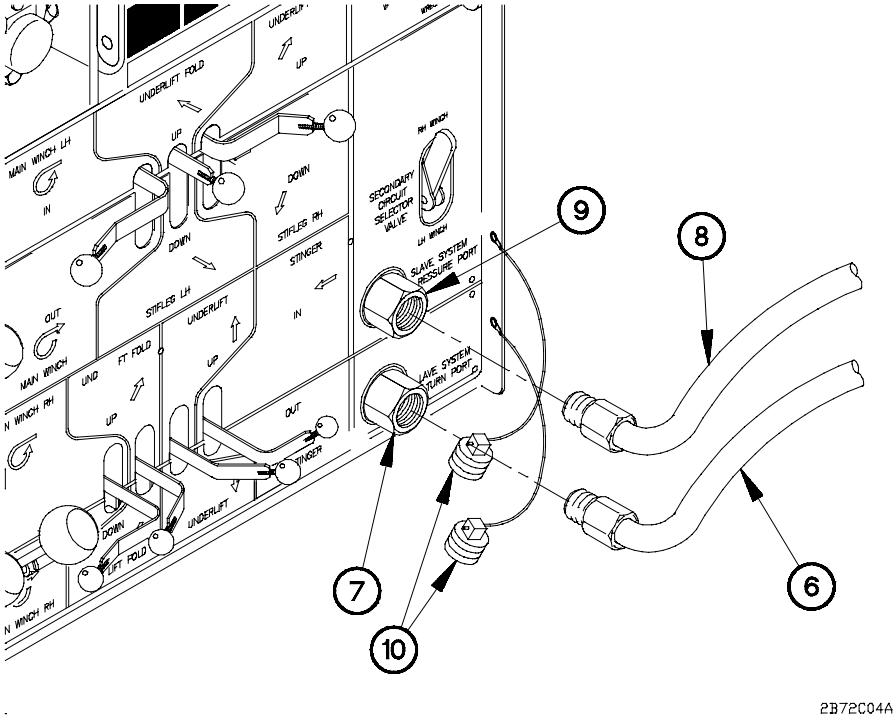

(6) Disconnect hydraulic hose (6) from SLAVE SYSTEM RETURN PORT (7) on disabled vehicle.

(7) Disconnect hydraulic hose (8) from SLAVE SYSTEM PRESSURE PORT (9) on disabled vehicle.

(8) Install two caps (10) on SLAVE SYSTEM PRESSURE PORT (9) and SLAVE SYSTEM RETURN PORT (7) on disabled vehicle.

(9) Disconnect hydraulic hose (6) from SLAVE SYSTEM RETURN PORT (7) on service vehicle.

(10) Disconnect hydraulic hose (8) from SLAVE SYSTEM PRESSURE PORT (9) on service vehicle.

(11) Install two caps (10) on SLAVE SYSTEM PRESSURE PORT (9) and SLAVE SYSTEM RETURN PORT (7) on service vehicle.

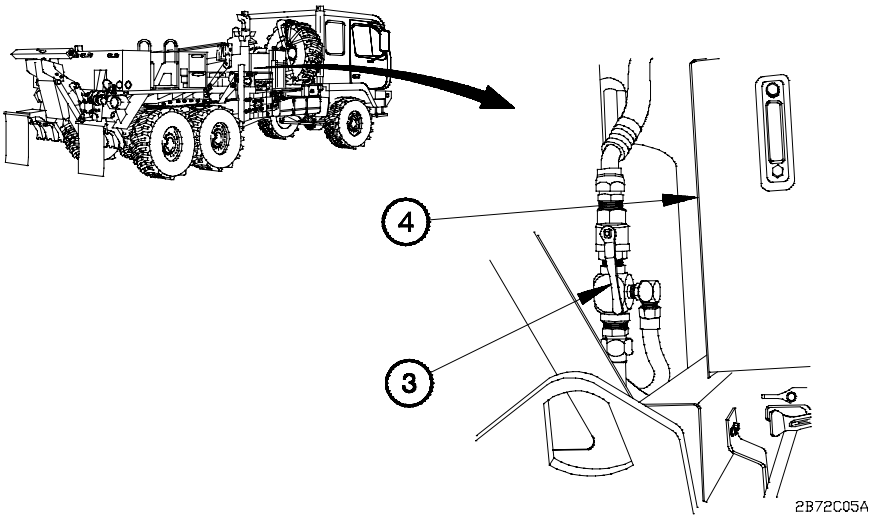

(12) Open return valve (3) to hydraulic tank (4) on service vehicle and disabled vehicle.

2-73. M1089 EXTERNAL HYDRAULIC POWER OPERATION

a. Preparation of Vehicle.

WARNING

M1089 hydraulic hoses are under 3,000 pounds (13,344 N) pressure and must be handled carefully to prevent damage or personal injury. Failure to comply may result in serious injury or death to personnel.

(1) Chock wheels (para 2-27h).

2-73. M1089 EXTERNAL HYDRAULIC POWER OPERATION (CONT)

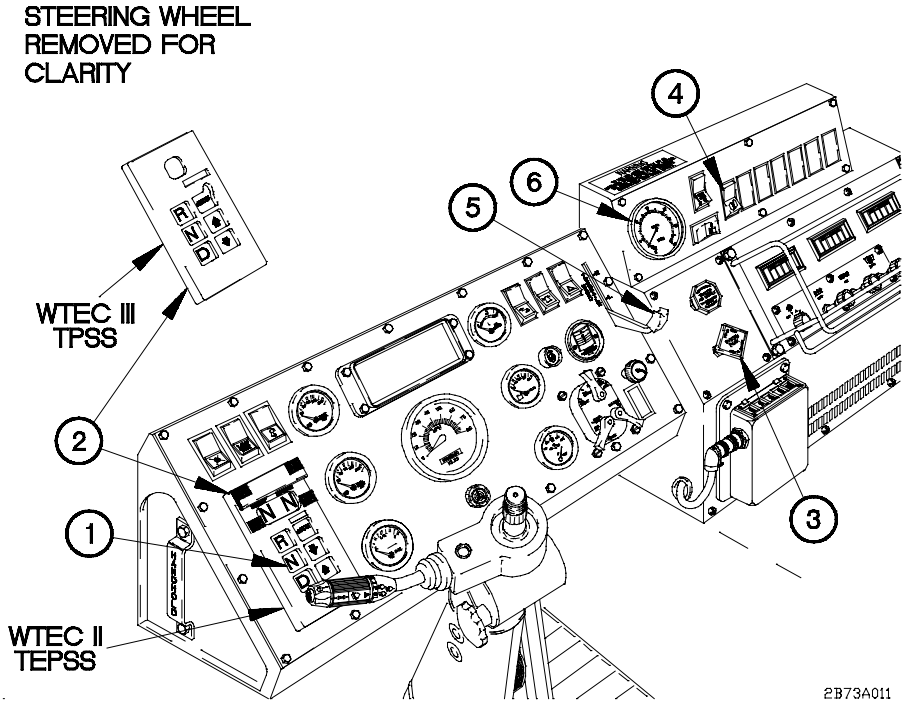

(2) Start engine (para 2-27a or b).

(3) Press N (Neutral) button (1) on WTEC II TEPSS (2) or WTEC III TPSS (2).

(4) Pull out SYSTEM PARK control (3).

(5) Position PTO switch (4) to on.

CAUTION

Keep tachometer within 1,250-1,450 rpm when Power Take-Off (PTO) is engaged. Failure to comply may result in damage to equipment.

NOTE

In the event of a tachometer failure a HAND THROTTLE lever positioned to L is approximately 1,250-1,450 rpm.

(6) Set engine speed by increasing HAND THROTTLE lever (5) until tachometer (6) reads 1,250-1,450 rpm.

b. Preparation to Provide External Hydraulic Power.

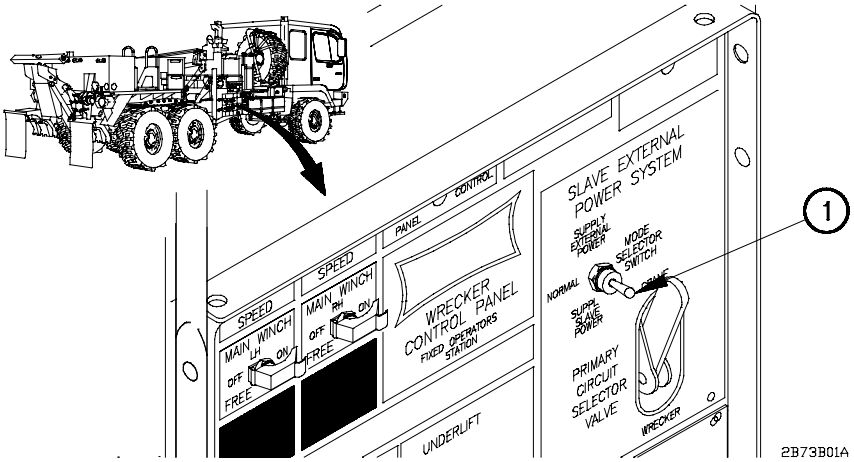

(1) Position MODE SELECTOR SWITCH (1) to NORMAL.

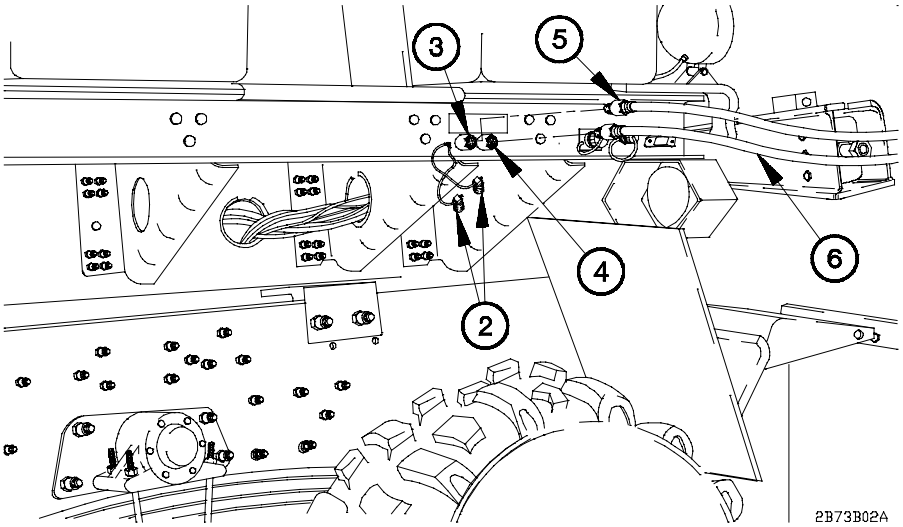

(2) Remove two caps (2) from EXTERNAL POWER PORTS PRESSURE port (3) and EXTERNAL POWER PORTS RETURN port (4).

(3) Connect hydraulic hose (5) to EXTERNAL POWER PORTS PRESSURE port (3) and external hydraulic tool.

(4) Connect hydraulic hose (6) to EXTERNAL POWER PORTS RETURN port (4) and external hydraulic tool.

2-73. M1089 EXTERNAL HYDRAULIC POWER OPERATION (CONT)

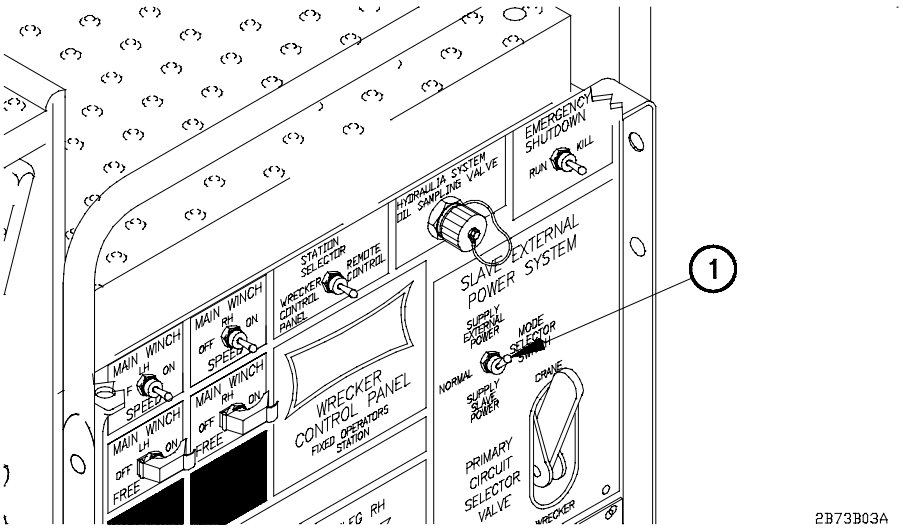

(5) Position MODE SELECTOR SWITCH (1) to SUPPLY EXTERNAL POWER.

c. External Hydraulic Power Disconnect Procedure.

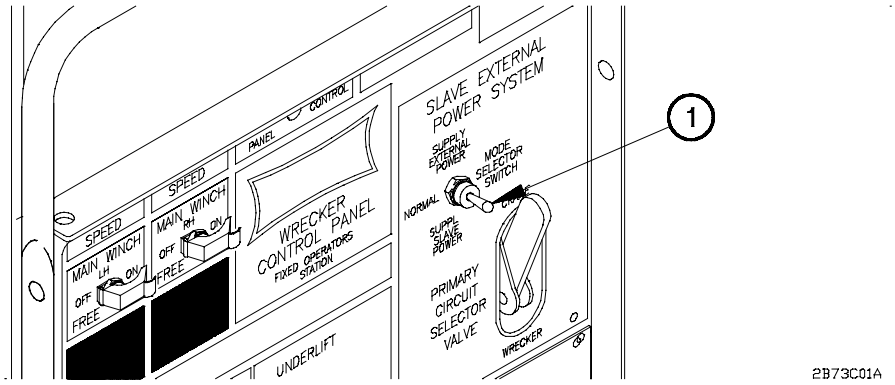

WARNING

MODE SELECTOR SWITCH must be in NORMAL position to relieve pressure before disconnecting hydraulic hoses. Failure to comply may result in serious injury or death to personnel.

(1) Position MODE SELECTOR SWITCH (1) to NORMAL.

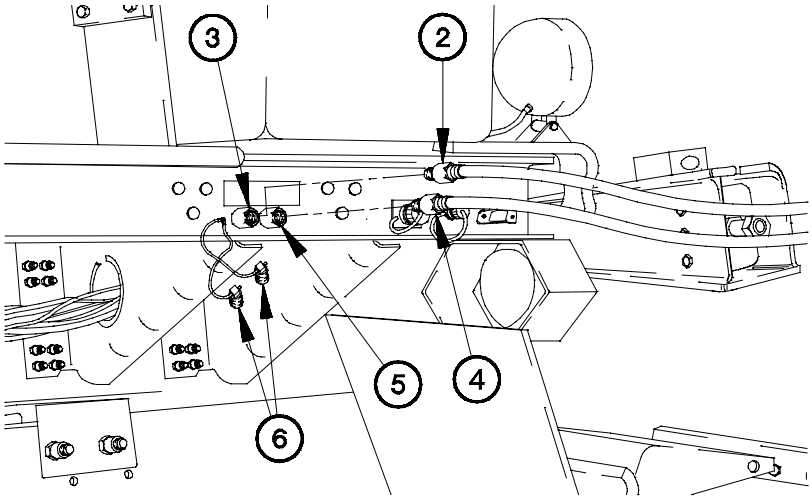

2B73C02A

(2) Disconnect hydraulic hose (2) from EXTERNAL POWER PORTS PRESSURE port (3).

(3) Disconnect hydraulic hose (4) from EXTERNAL POWER PORTS RETURN port (5).

(4) Install two caps (6) on EXTERNAL POWER PORTS PRESSURE port (3) and EXTERNAL POWER PORTS RETURN port (5).

2-74. AMBER WARNING LIGHT KIT INSTALLATION/REMOVAL

a. Install Amber Warning Light (All models except M1089).

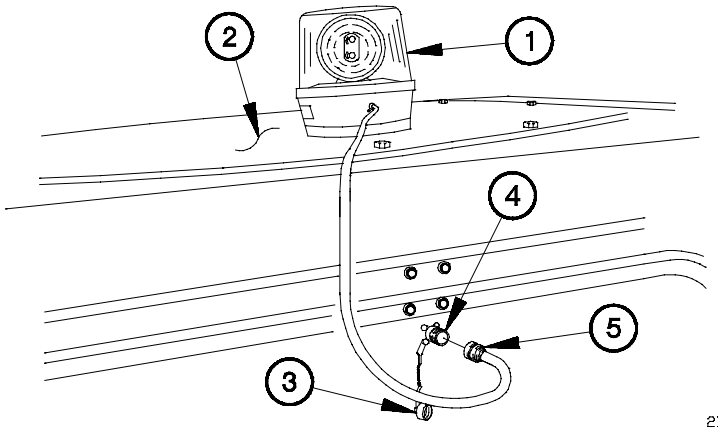

2B74A01A

(1) Position amber warning light (1) on cab (2).

(2) Remove cap (3) from electrical connector (4).

(3) Connect amber warning light plug (5) to electrical connector (4).

2-74. AMBER WARNING LIGHT KIT INSTALLATION/REMOVAL (CONT)

b. Remove Amber Warning Light (All models except M1089).

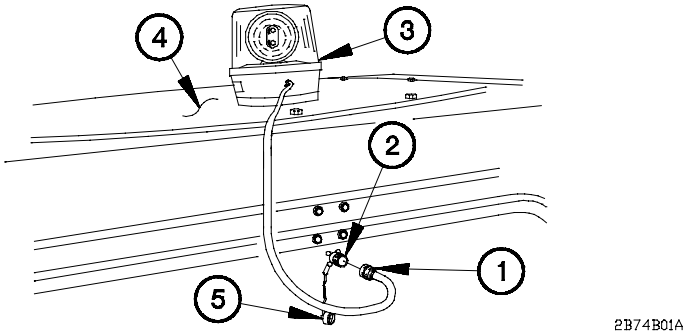

(1) Disconnect amber warning light plug (1) from electrical connector (2).

(2) Remove amber warning light (3) from cab (4).

(3) Install cap (5) on electrical connector (2).

c. Install Amber Warning Lights (M1089).

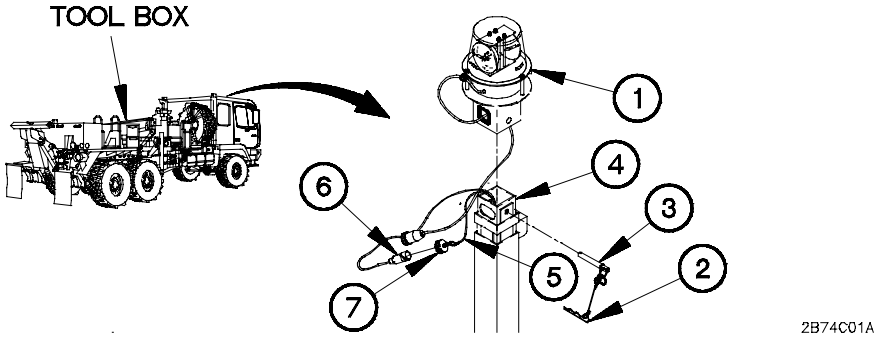

NOTE

Left and right side amber warning lights are installed the same way. Right side shown.

(1) Remove amber warning lights (1) from tool box.

(2) Remove clevis pin (2) and pin (3) from mast (4).

(3) Lift mast lanyard (5) and mast electrical connector (6) from inside mast (4).

(4) Remove dust cover (7) from mast electrical connector (6).

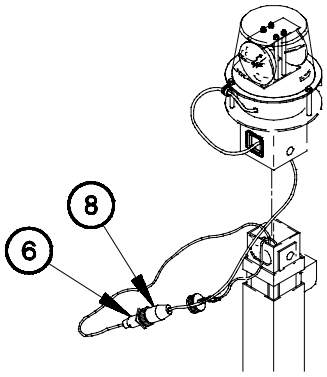

(5) Connect mast electrical connector (6) to amber warning light electrical connector (8).

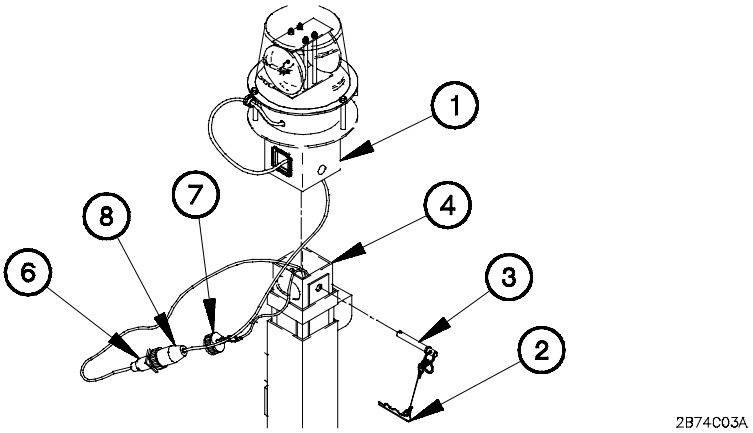

CAUTION

Both electrical connectors must be inserted into mast before amber warning light is installed on mast. Failure to comply may result in damage to equipment.

(6) Insert mast electrical connector (6) and amber warning light electrical connector (8) into mast (4).

(7) Lower dust cap (7) into mast (4).

(8) Install amber warning light (1) on mast (4).

(9) Install pin (3) in mast (4).

(10) Install clevis pin (2) in pin (3).

2-74. AMBER WARNING LIGHT KIT INSTALLATION/REMOVAL (CONT)

d. Raise Mast (to Mid-Position) (M1089).

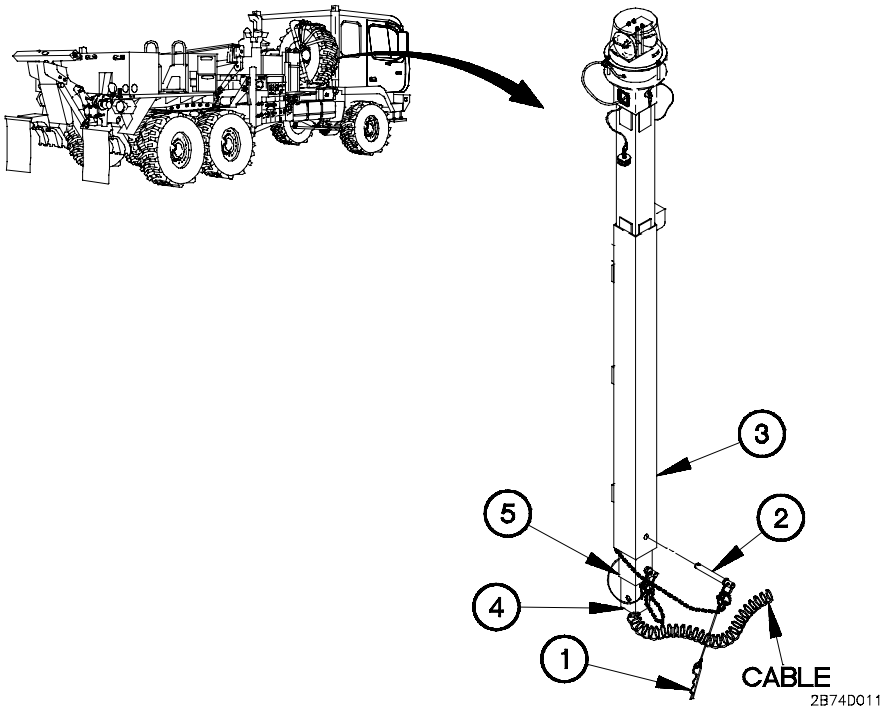

NOTE

Left and right side masts are raised the same way. Right side shown.

(1) Remove clevis pin (1) and pin (2) from mast (3).

CAUTION

Ensure cable has enough slack after inner tube is raised to prevent cable from rubbing against mast. Failure to comply may result in damage to equipment.

(2) Lift up on handle (4) to raise inner tube (5) to mid-position.

(3) Install pin (2) in mast (3).

(4) Install clevis pin (1) in pin (2).

e. Raise Mast (to Full Height) (M1089).

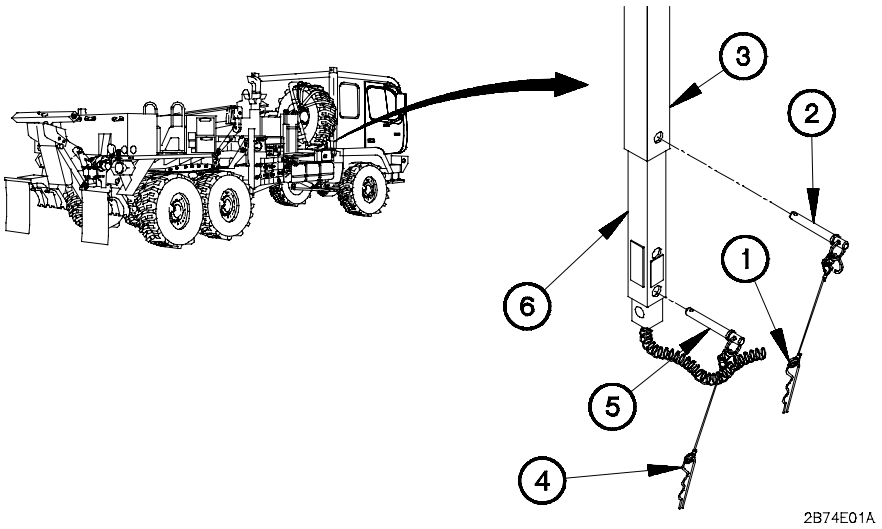

(1) Remove clevis pin (1) and pin (2) from mast (3).

(2) Remove clevis pin (4) and pin (5) from inner tube (6).

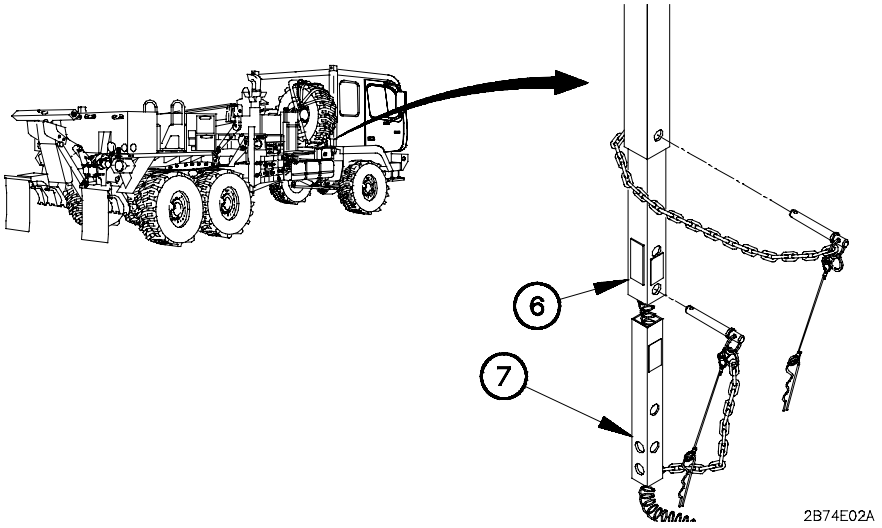

(3) Remove handle (7) from inner tube (6).

(4) Turn handle (7) one quarter turn in either direction.

(5) Install handle (7) in inner tube (6).

2-74. AMBER WARNING LIGHT KIT INSTALLATION/REMOVAL (CONT)

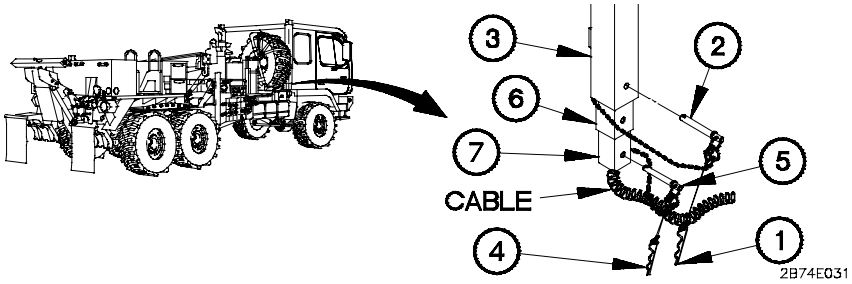

CAUTION

Ensure cable has enough slack after inner tube is raised to prevent cable from rubbing against mast. Failure to comply may result in damage to equipment.

(6) Lift up on handle (7) to raise inner tube (6) to full up position.

(7) Install pin (2) in mast (3).

(8) Install clevis pin (1) in pin (2).

(9) Install pin (5) in handle (7).

(10) Install clevis pin (4) in pin (5).

f. Lower Mast (from Mid-Position) (M1089 Only).

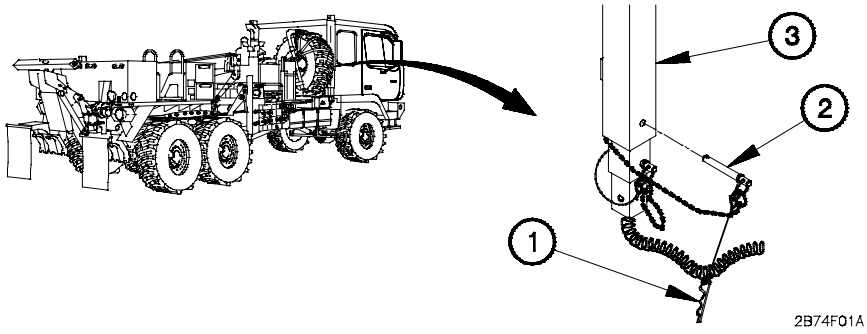

NOTE

Left and right side masts are lowered the same way. Right side shown.

(1) Remove clevis pin (1) and pin (2) from mast (3).

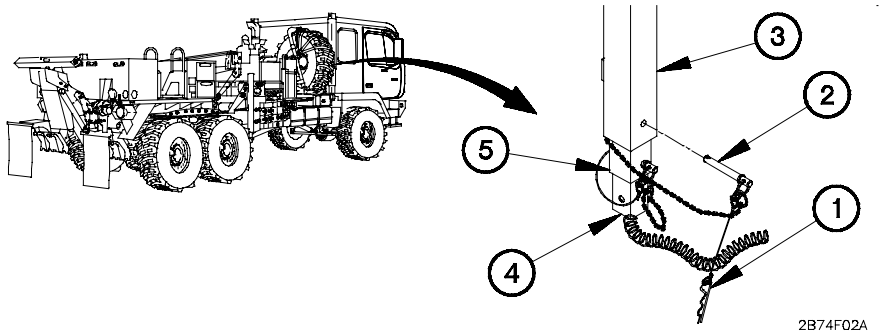

(2) Lower inner tube (5) to down position with handle (4).

(3) Install pin (2) in mast (3).

(4) Install clevis pin (1) in pin (2).

g. Lower Mast (from Full Height) (M1089 Only).

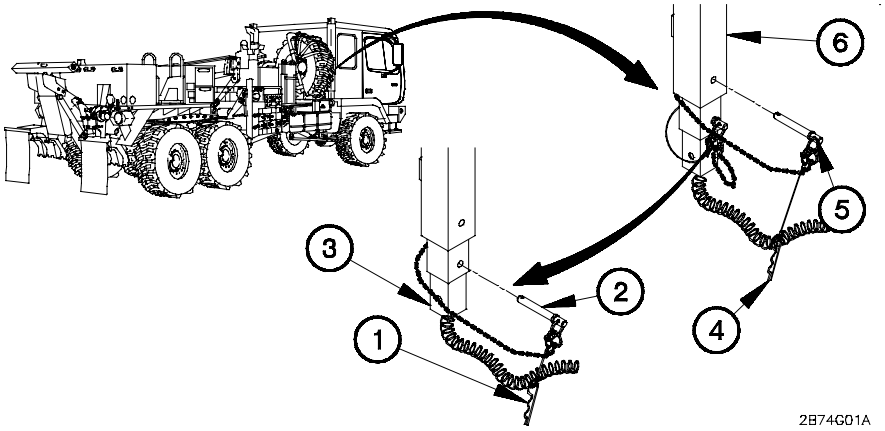

(1) Remove clevis pin (1) and pin (2) from handle (3).

(2) Remove clevis pin (4) and pin (5) from mast (6).

2-74. AMBER WARNING LIGHT KIT INSTALLATION/REMOVAL (CONT)

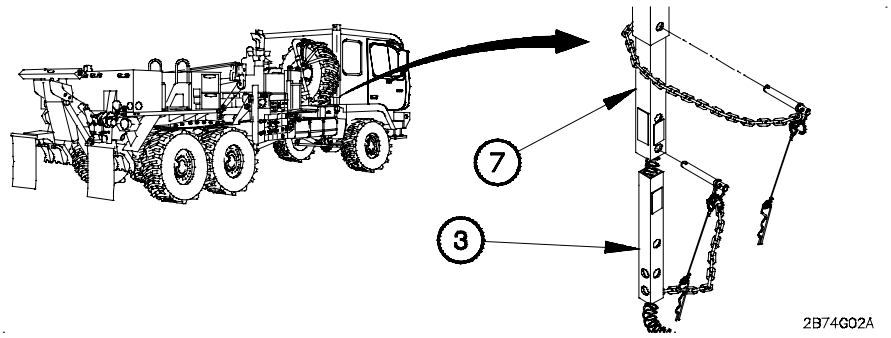

(3) Lower handle (3) to full down.

(4) Remove handle (3) from inner tube (7).

(5) Turn handle (3) one quarter turn in either direction.

(6) Install handle (3) in inner tube (7).

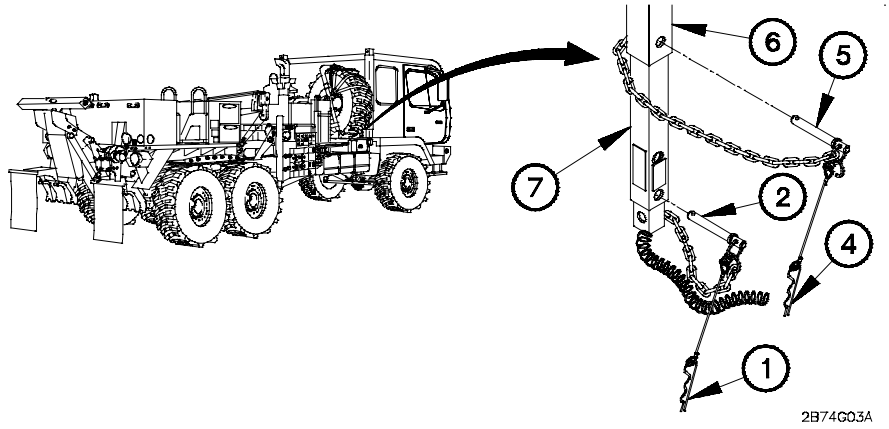

(7) Install pin (2) in inner tube (7).

(8) Install clevis pin (1) in pin (2).

(9) Install pin (5) in mast (6).

(10) Install clevis pin (4) in pin (5).

h. Remove Amber Warning Lights (M1089).

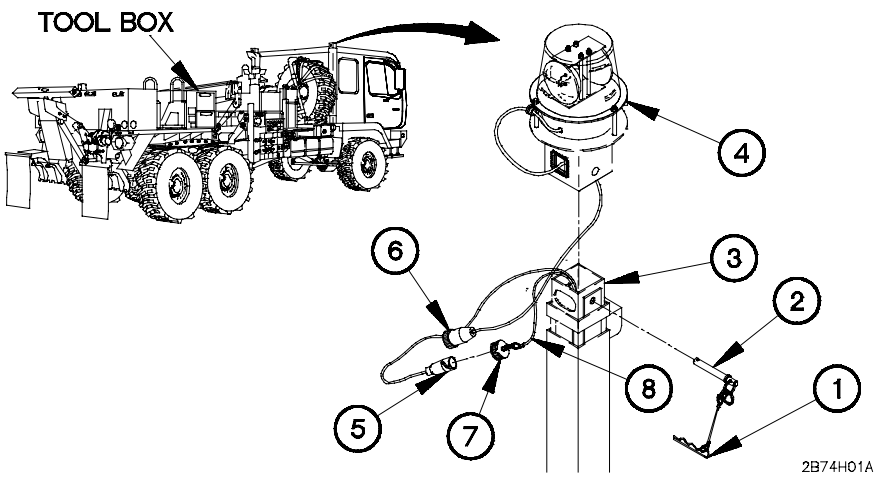

NOTE

Left and right side amber warning lights are removed the same way. Right side shown.

(1) Remove clevis pin (1) and pin (2) from mast (3).

(2) Lift amber warning light (4) from mast (3).

(3) Disconnect mast electrical connector (5) from amber warning light electrical connector (6).

(4) Install dust cap (7) on mast electrical connector (5).

(5) Using lanyard (8), lower mast electrical connector (5) into mast (3).

(6) Install pin (2) in mast (3).

(7) Install clevis pin (1) in pin (2).

(8) Place amber warning lights (4) in tool box.

2-75. STARTING ON HILL OPERATION

(1) Start engine (para 2-27a or b).

(2) Apply service brakes (para 2-27d).

(3) Select the desired gear (para 2-27e).

(4) Increase engine speed and slowly release service brakes.

2-76. TIRE CHAINS INSTALLATION/REMOVAL

a. Rear Axle Tire Chain Installation.

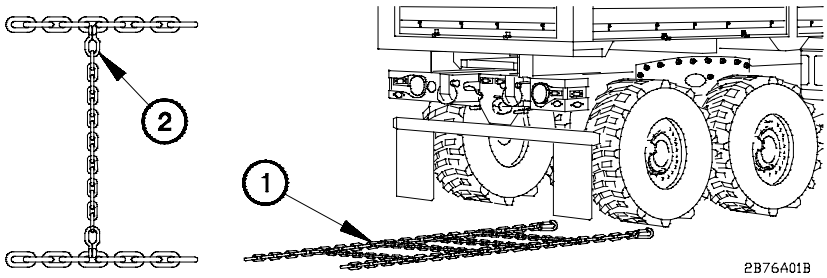

WARNING

Do not change tire pressure with tire chains installed. Changing tire pressure with tire chains installed could result in chain slippage. Failure to comply may result in serious injury to personnel or damage to equipment.

CAUTION

When tire chains are used they must be used on all four rear wheels. Tire chains must not be used when driving on hard surfaces where there is no wheel slippage. Failure to comply may result in damage to equipment.

NOTE

Maximum speed limit for vehicles with tire chains on highways is 10 mph (16 km/h). Maximum speed limit for vehicles with tire chains off highway is 15 mph (24 km/h).

(1) Place tire chain (1) on ground with cross chain connecting links (2) facing down.

(2) Start engine (para 2-27a or b).

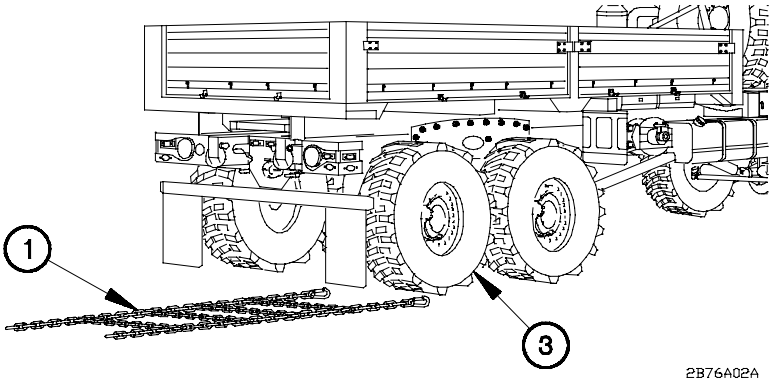

WARNING

Do not back up vehicle without an assistant. Operator has limited vision while backing vehicle. Failure to comply may result in serious injury or death to personnel or damage to equipment.

(3) Back vehicle onto tire chain (1) so tire (3) is about one-third of the way on tire chain.

(4) Shut down engine (para 2-27f).

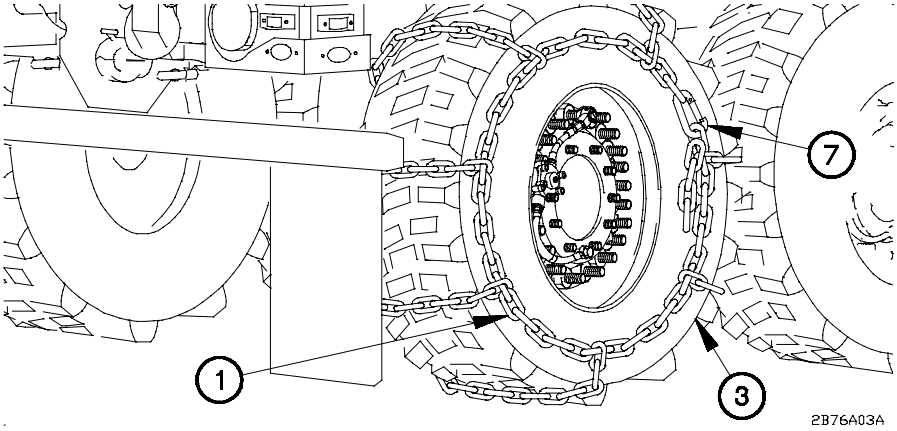

(5) Wrap tire chain (1) around tire (3).

NOTE

Inside and outside clamps are connected the same way. Outside clamp shown.

(6) Connect inside and outside clamps (7) so tire chain (1) is tight around tire (3).

2-76. TIRE CHAINS INSTALLATION/REMOVAL (CONT)

b. Intermediate Axle Tire Chain Installation.

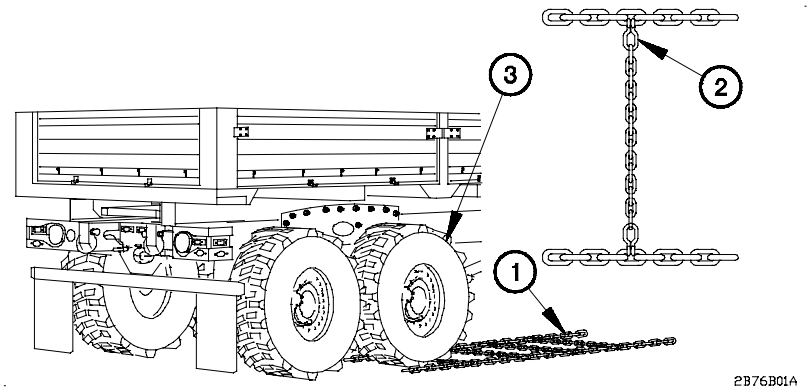

(1) Place tire chain (1) on ground with cross chain connecting links (2) facing down.

(2) Start engine (para 2-27a or b).

(3) Drive vehicle onto tire chain (1) so tire (3) is about one-third of the way on tire chain.

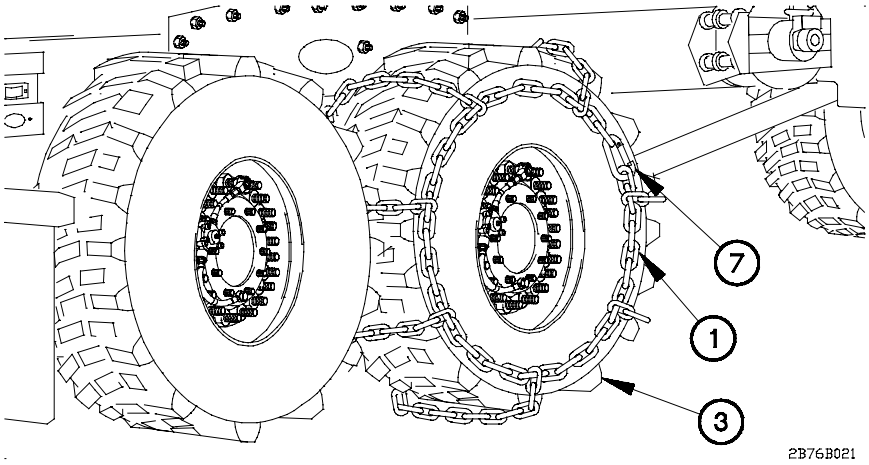

(4) Shut down engine (para 2-27f).

(5) Wrap tire chain (1) around tire (3).

NOTE

Inside and outside clamps are connected the same way. Outside clamp shown.

(6) Connect inside and outside clamps (7) so tire chain (1) is tight around tire (3).

c. Rear Axle Tire Chain Removal.

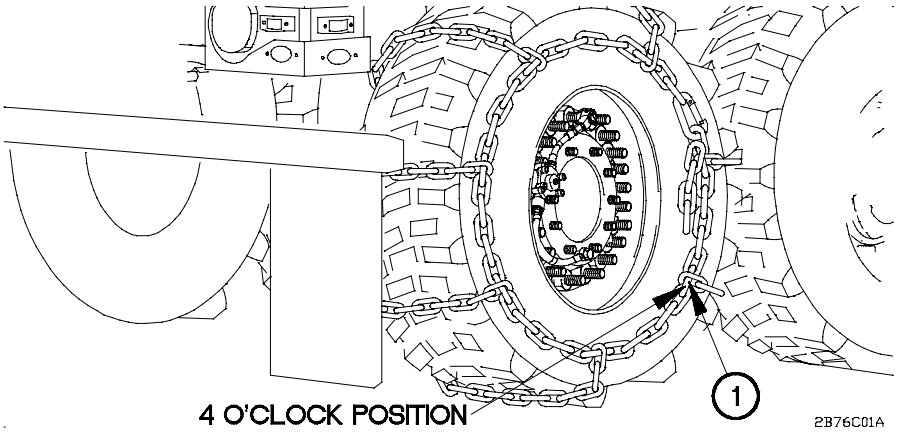

(1) Start engine (para 2-27a or b).

(2) Move vehicle until tire chain clamps (1) to be removed are at the 4 o'clock position.

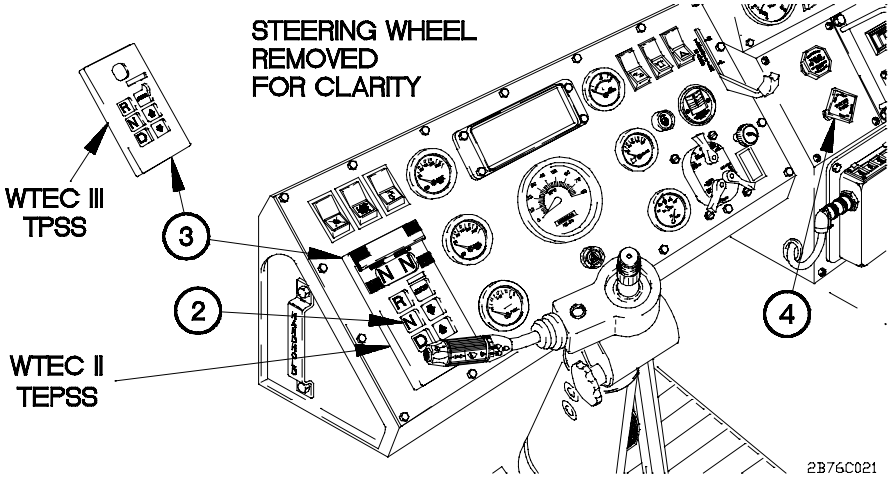

(3) Press N (Neutral) button (2) on WTEC II TEPSS (3) or WTEC III TPSS (3).

(4) Pull out SYSTEM PARK control (4).

2-76. TIRE CHAINS INSTALLATION/REMOVAL (CONT)

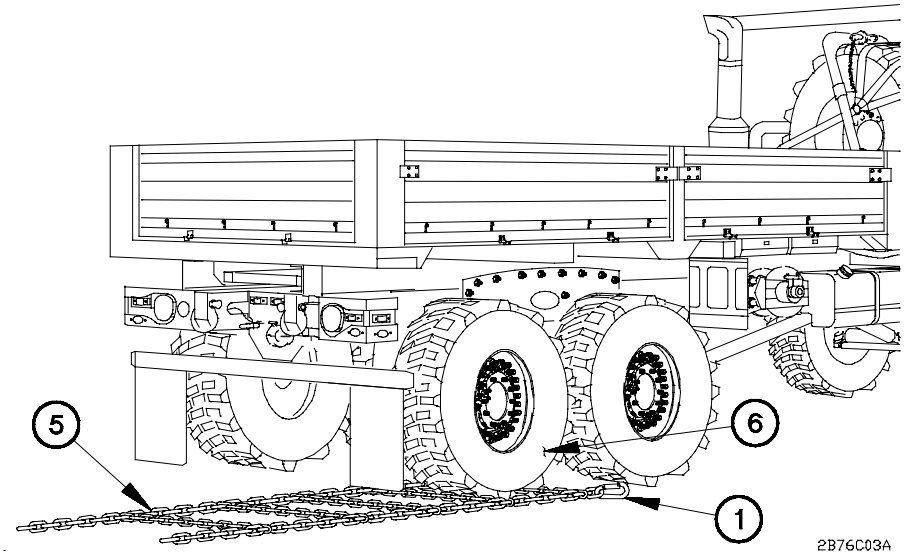

(5) Disconnect tire chain clamps (1) on tire chain (5).

(6) Unwrap tire chain (5) from tire (6) and spread tire chain on ground.

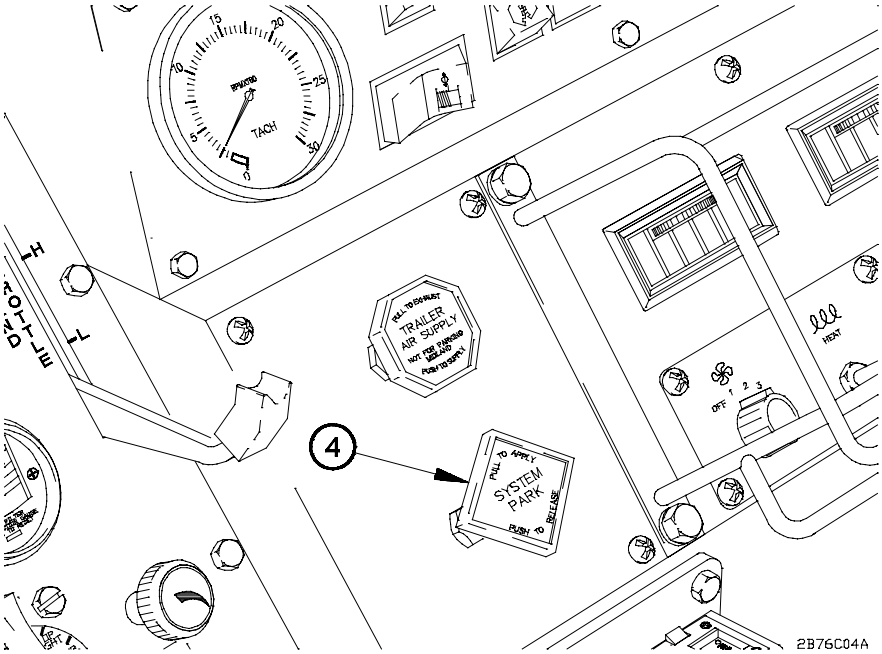

(7) Push in SYSTEM PARK control (4).

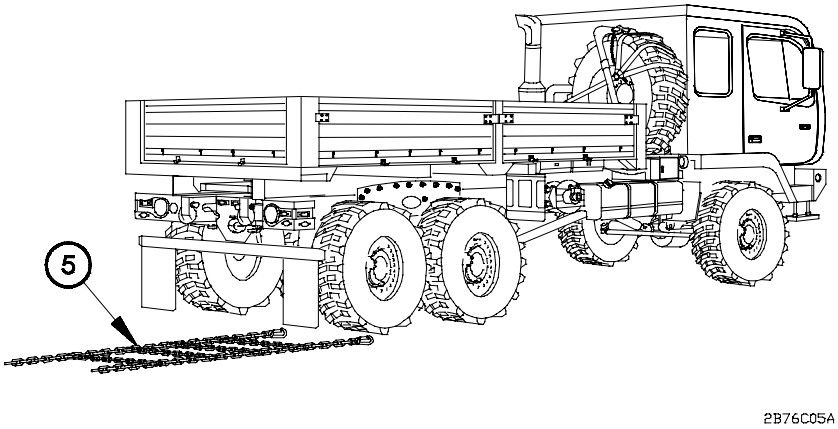

(8) Drive vehicle forward off tire chain (5).

(9) Shut down engine (para 2-27f).

d. Intermediate Axle Tire Chain Removal.

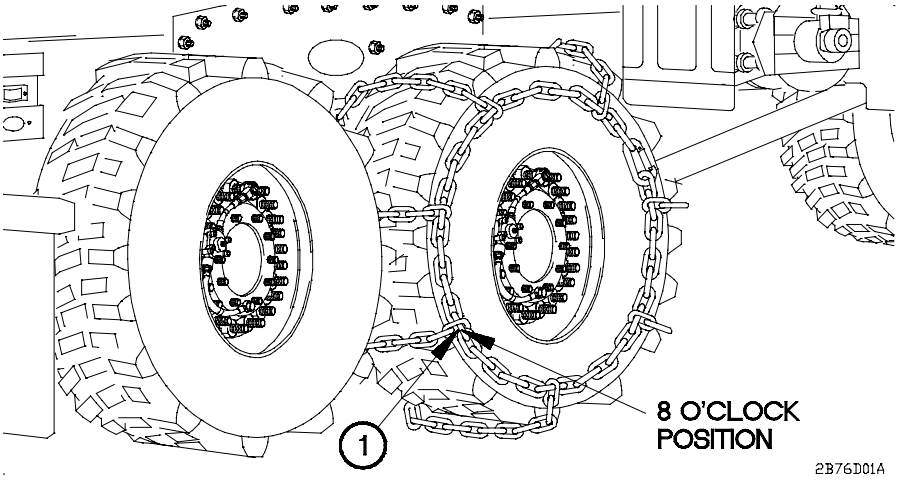

(1) Start engine (para 2-27a or b).

(2) Move vehicle until tire chain clamps (1) to be removed are at the 8 o'clock position.

2-76. TIRE CHAINS INSTALLATION/REMOVAL (CONT)

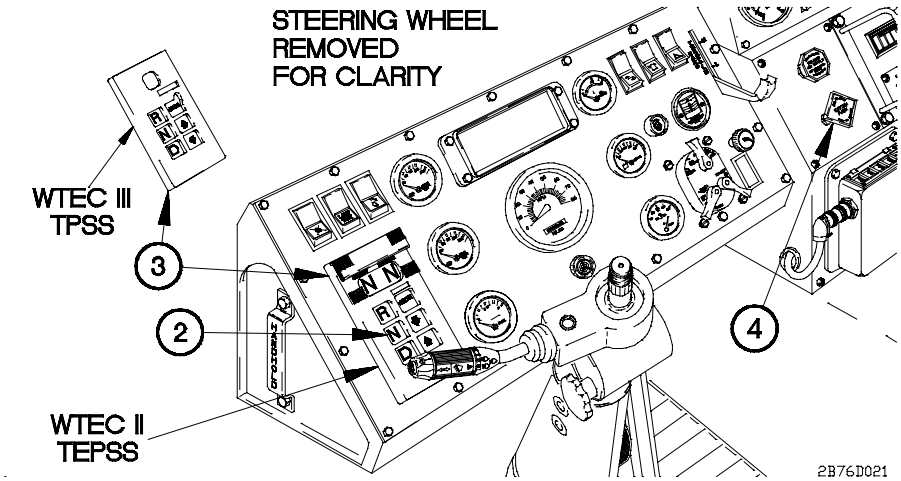

(3) Press N (Neutral) button (2) on WTEC II TEPSS (3) or WTEC III TPSS (3).

(4) Pull out SYSTEM PARK control (4).

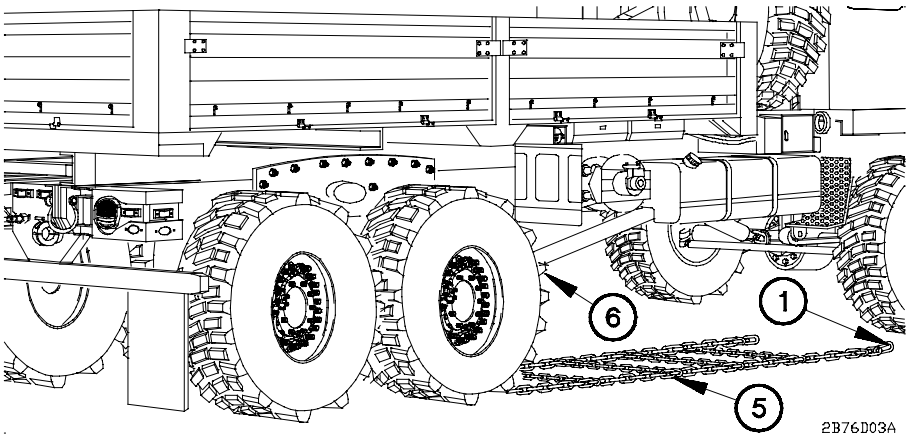

(5) Disconnect tire chain clamps (1) on tire chain (5).

(6) Unwrap tire chain (5) from tire (6) and spread tire chain on ground.

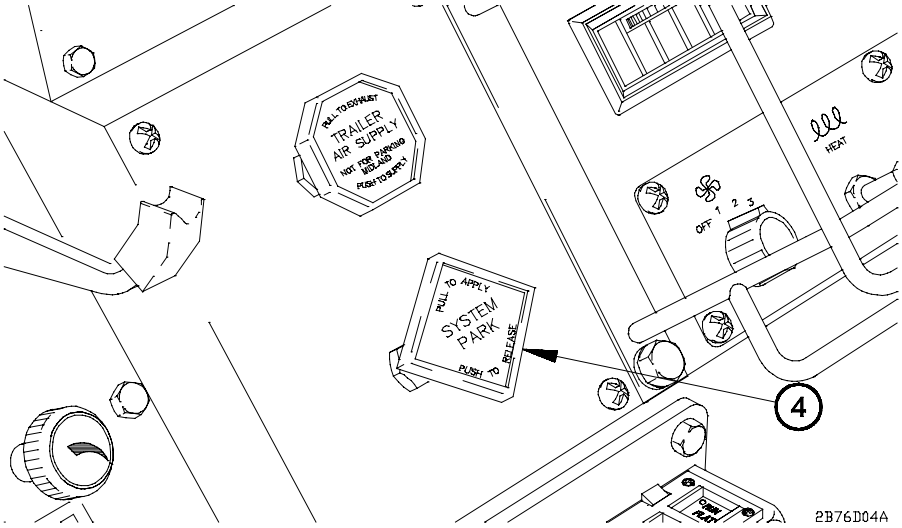

(7) Push in SYSTEM PARK control (4).

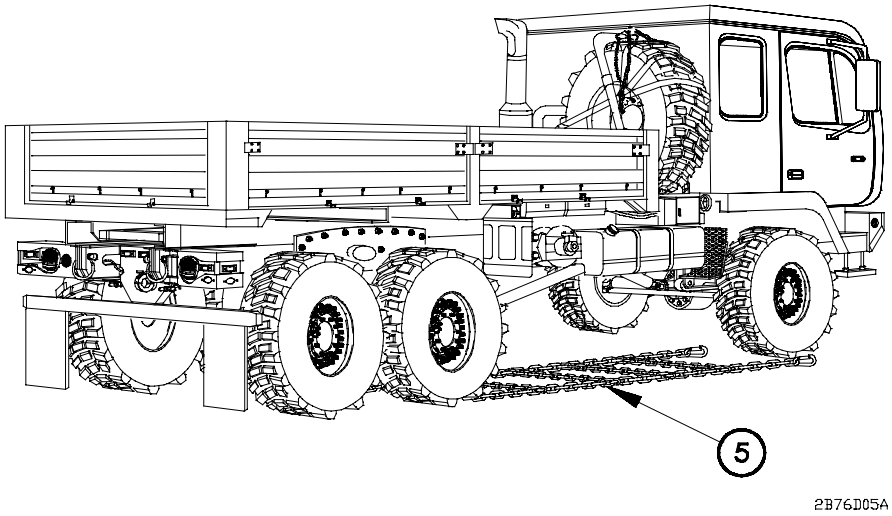

WARNING

Do not back up vehicle without an assistant. Operator has limited vision while backing vehicle. Failure to comply may result in serious injury or death to personnel or damage to equipment.

(8) Back vehicle off tire chain (5).

(9) Shut down engine (para 2-27f).

2-77. SNATCH BLOCK INSTALLATION/REMOVAL

a. Install Snatch Block on 30K Winch Cable.

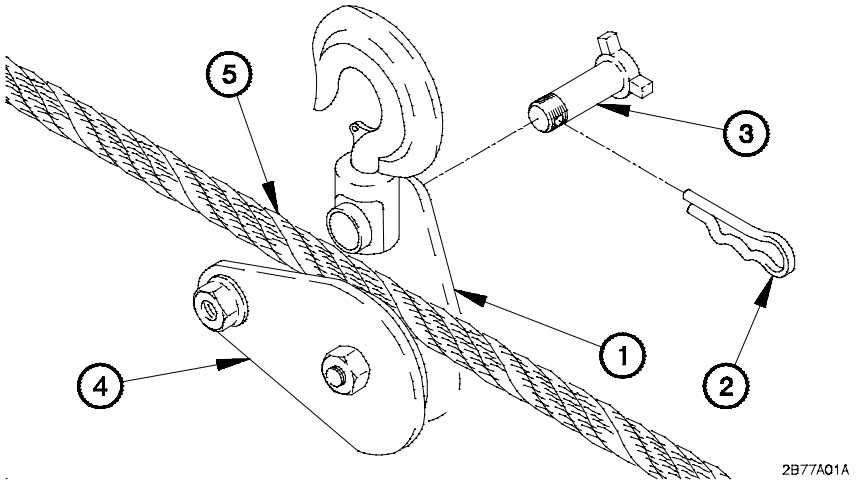

(1) Remove snatch block (1) from tool box.

(2) Remove clevis pin (2) from screw (3).

(3) Loosen screw (3) in snatch block (1).

(4) Move plate (4) to side to open snatch block (1).

(5) Place cable (5) in snatch block (1).

(6) Close plate (4) and align holes.

(7) Tighten screw (3) in snatch block (1).

(8) Install clevis pin (2) in screw (3).

CAUTION

■ Do not exceed a 30-ton (27 metric tons) pull on snatch block. Failure to comply may result in damage to equipment.

(9) Attach snatch block (1) to mired vehicle (FM 20-22).

(10) Continue with 30K Winch Operation (para 2-42a).

b. Remove Snatch Block from 30K Winch Cable.

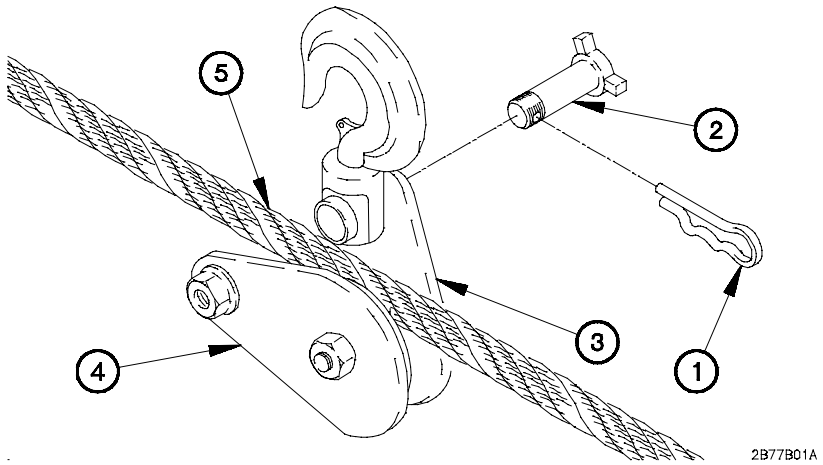

CAUTION

Ensure that there is enough slack in cable before removing cable from snatch block. Failure to comply may result in damage to equipment.

(1) Remove clevis pin (1) from screw (2).

(2) Loosen screw (2) in snatch block (3).

(3) Move plate (4) to side to open snatch block (3).

(4) Remove cable (5) from snatch block (3).

(5) Close plate (4) and align holes.

(6) Tighten screw (2) in snatch block (3).

(7) Remove snatch block (3) from mired vehicle (FM 20-22)

(8) Clean and inspect snatch block (3) for damage (FM 20-22).

(9) Lubricate snatch block (3) (Appendix F).

(10) Stow snatch block (3) in tool box.

(11) Continue with 30K Winch operation (para 2-42a).

2-78. VEHICLE OPERATION IN COLD ENVIRONMENT 32°F TO -25°F (0°C TO -32°C)

a. Cold Environment Operations.

WARNING

- **Wear arctic clothing when cab temperatures fall and remain below 30° F (-1° C). Cold stress preventative measures in FM 21-10 should be applied when vehicle cab temperatures fall and remain below 30° F (-1° C). Failure to comply may result in serious injury or death to personnel.**

- **When operating the vehicle in snowy or icy conditions, apply the brake pedal momentarily, every few miles. This will ensure that brake linings do not become encrusted with snow or ice. Failure to comply may result in injury to personnel or damage to equipment.**

CAUTION

- Before operating ensure the vehicle has been prepared for cold weather environment in accordance with FM 9-207. Refer to FM 31-70, FM 31-71, and FM 21-305 for additional information on operation in cold environment. Failure to comply may result in damage to equipment.

- Monitor instrument panel gauges closely. If there are any unusual readings, stop vehicle and shut down engine. Check for cause immediately. Failure to comply may result in damage to equipment.

- Park in shelter when possible. If shelter is not available, park so vehicle does not face into wind. Follow procedures in FM 9-207 to prevent vehicle from freezing in place. Failure to comply may result in damage to equipment.

- Fuel filter should be drained before topping off fuel tank. Keep fuel tank as full as possible during cold weather operations. Moisture will form in fuel tank as it cools. Moisture will freeze and block fuel supply to engine. Failure to comply may result in damage to equipment.

- All snow and ice should be removed from vehicle as soon as possible. Snow and ice may slow or prevent movement of equipment. Failure to comply may result in damage to equipment.

(1) Install tire chains, as required (para 2-76a).

(2) Notify Unit Maintenance to install Cold Weather Radiator Cover.

(3) Start engine (para 2-27a). ■

CAUTION

In cold environments M1084/M1086 and M1089 Material Handling Crane (MHC) must be exercised for 10 minutes before normal operation. Failure to comply may result in damage to equipment.

(4) Exercise MHC before normal operation (para 2-37 for M1084/M1086, para 2-50 for M1089). ■

b. CTIS Cold Weather Operation.

NOTE

When temperatures are below -15°F (-26°C), CTIS air leaks may occur when the vehicle is started. This is indicated by four or five flashing mode lights on the CTIS ECU. When CTIS seals warm up and air leakage stops, the CTIS ECU should automatically reset and the CTIS ECU selected mode light will light steady. When four or five mode lights are flashing perform step (1).

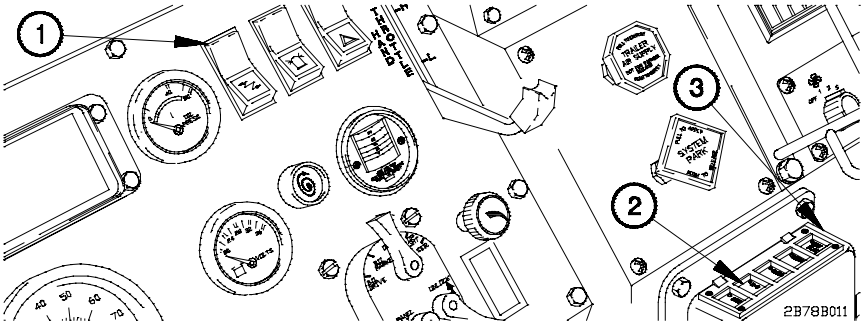

(1) Drive vehicle for approximately 15-30 minutes or until CTIS ECU resets.

NOTE

If CTIS ECU does not reset, perform steps (2) through (5). If CTIS ECU does not reset after performing steps (2) through (4), notify Unit Maintenance.

(2) Position master power switch (1) to off.

(3) Position master power switch (1) to on.

(4) Depress cross-country mode (XC) (2) on ECU (3).

2-79. DELETED

All data on page 2-886 deleted

2-80. M1088 TRACTOR PREPARATION FOR AIR OR SHIP TRANSPORT

a. Sliding Fifth Wheel to the Rear.

WARNING

Never stand against or between tractor tires, stand between tractor and trailer, allow anyone behind trailer during movement, or allow anyone to stand on opposite side of operator during fifth wheel release. Always chock trailer tires before coupling, connect trailer brakes air supply and set trailer brakes before sliding fifth wheel. Use release tool when releasing and engaging slide latch lever. Failure to comply may result in serious injury or death to personnel.

NOTE

The fifth wheel is in the forward position during normal operation.

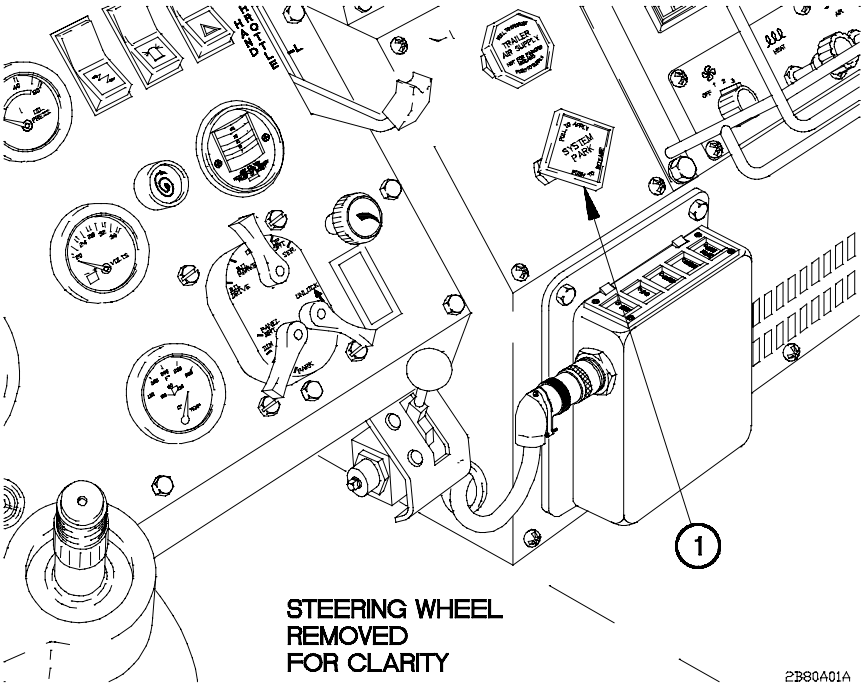

(1) Pull out SYSTEM PARK control (1).

2-80. M1088 TRACTOR PREPARATION FOR AIR OR SHIP TRANSPORT (CONT)

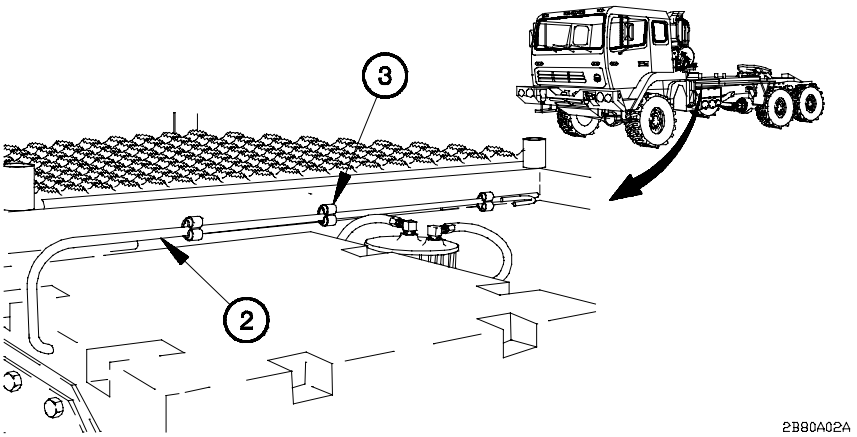

(2) Remove release tool (2) from stowage brackets (3).

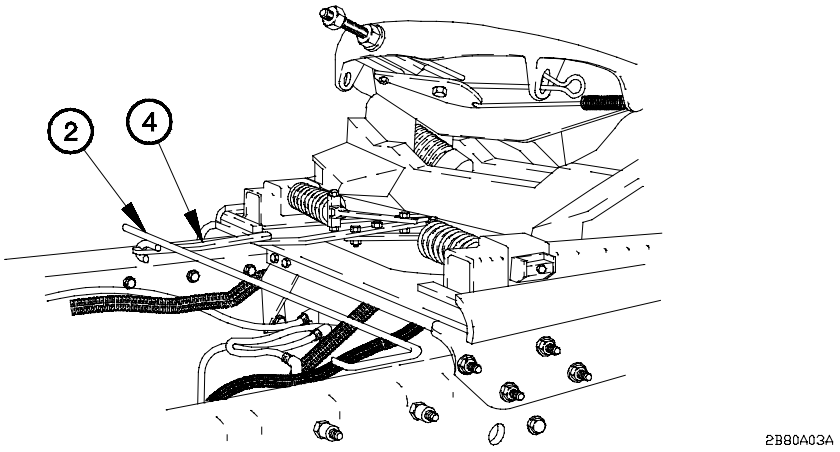

NOTE

Slide release lever will lock into place automatically when release tool is pulled.

(3) Pull slide latch release lever (4) to the locked open position with release tool (2).

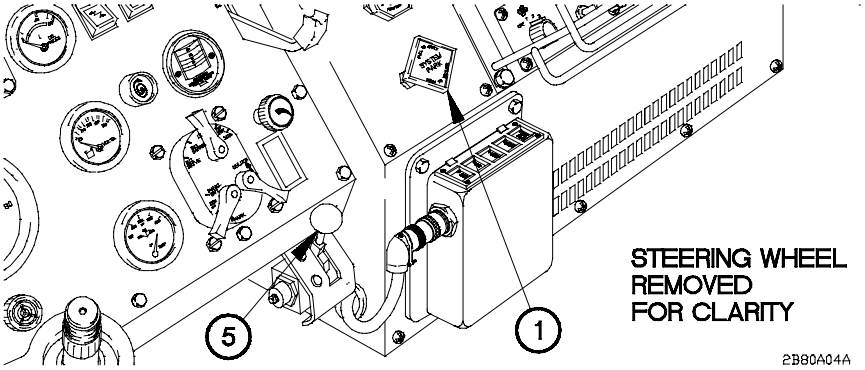

(4) Push down on trailer service brake valve (5).

(5) Push in SYSTEM PARK control (1).

(6) Very slowly drive tractor forward until fifth wheel reaches the rear stop blocks.

(7) Pull out SYSTEM PARK control (1).

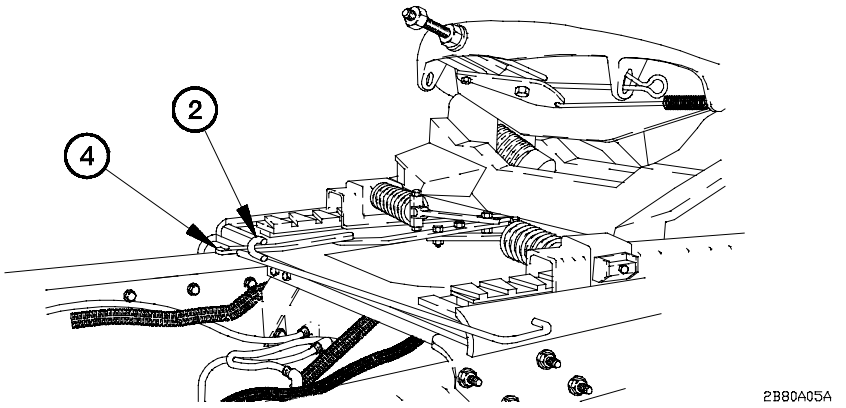

WARNING

Use release tool with hook side up when closing slide latch release lever. Failure to comply may result in injury to personnel.

NOTE

Slide carriage will lock into place automatically when slide latch release lever is tripped.

(8) Close slide latch release lever (4) by pushing slide latch release lever with the point of the release tool (2).

2-80. M1088 TRACTOR PREPARATION FOR AIR OR SHIP TRANSPORT (CONT)

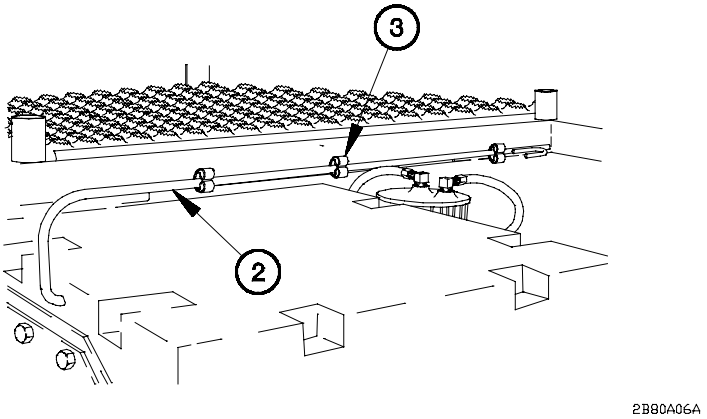

(9) Install release tool (2) in stowage brackets (3).

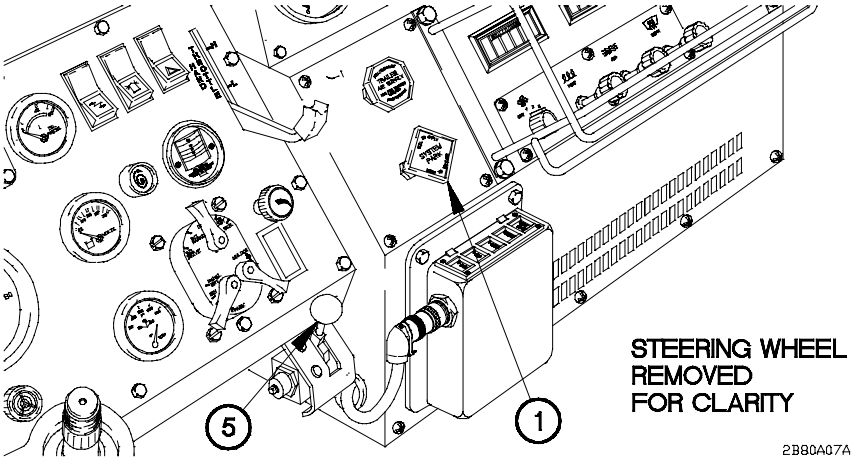

(10) Push in SYSTEM PARK control (1).

(11) Pull up on trailer service brake valve (5).

b. Sliding Fifth Wheel to the Front.

WARNING

Never stand against or between tractor tires, stand between tractor and trailer, allow anyone behind trailer during movement, or allow anyone to stand on opposite side of operator during fifth wheel release. Always chock trailer tires before coupling, connect trailer brakes air supply and set trailer brakes before sliding fifth wheel. Use release tool when releasing and engaging slide latch lever. Failure to comply may result in serious injury or death to personnel.

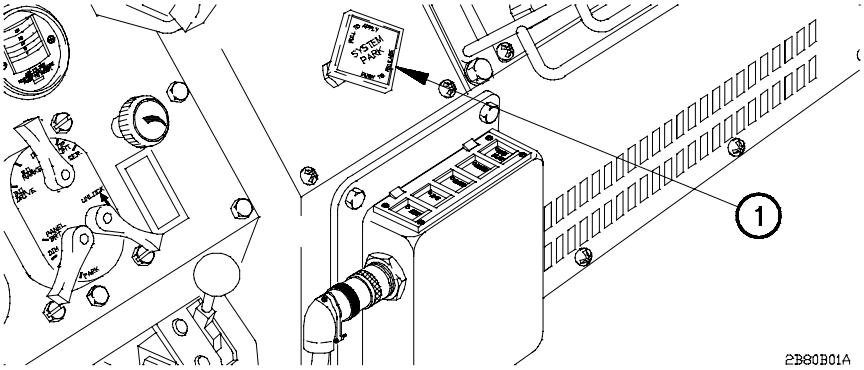

(1) Pull out SYSTEM PARK control (1).

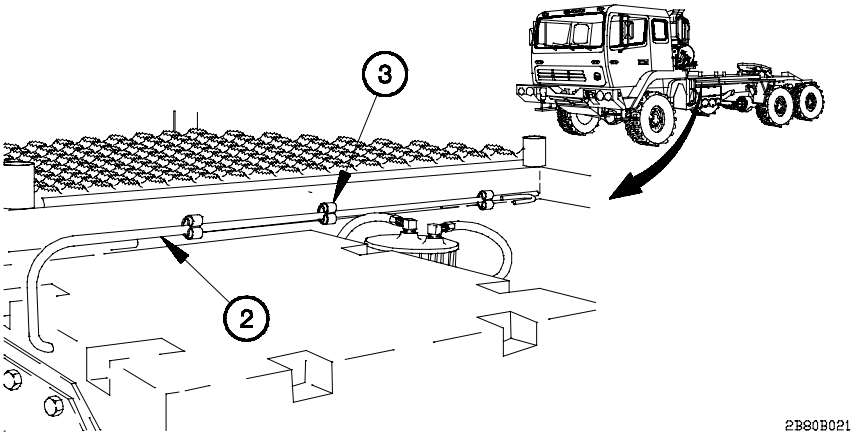

(2) Remove release tool (2) from stowage brackets (3).

2-80. M1088 TRACTOR PREPARATION FOR AIR OR SHIP TRANSPORT (CONT)

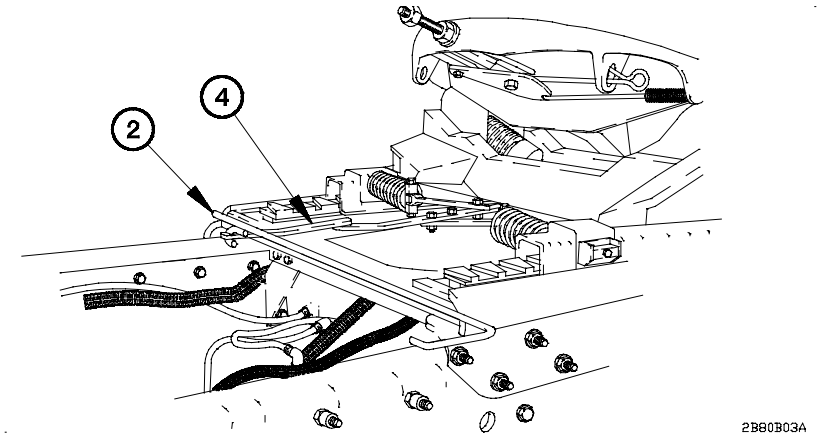

NOTE

Slide release lever will lock into place automatically when release tool is pulled.

(3) Pull slide latch release lever (4) to the locked open position with release tool (2).

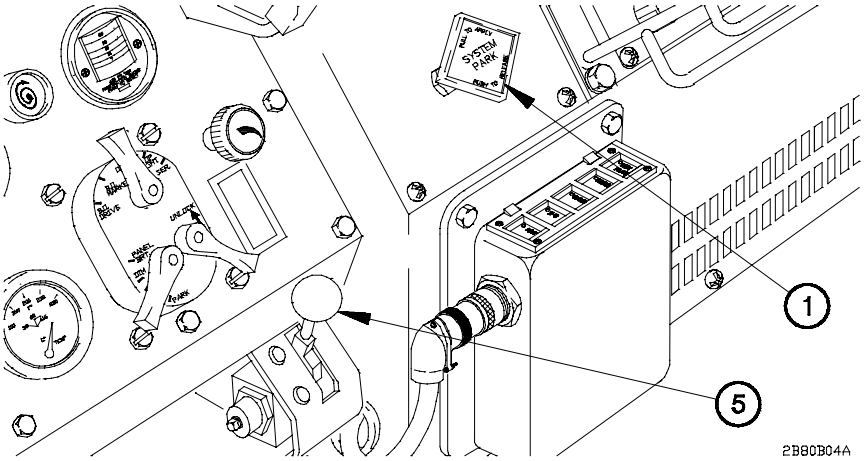

(4) Push down on trailer service brake valve (5).

(5) Push in SYSTEM PARK control (1).

(6) Very slowly drive tractor/trailer rearward until fifth wheel reaches the front stop blocks (trailer resistance will be felt).

(7) Pull out SYSTEM PARK control (1).

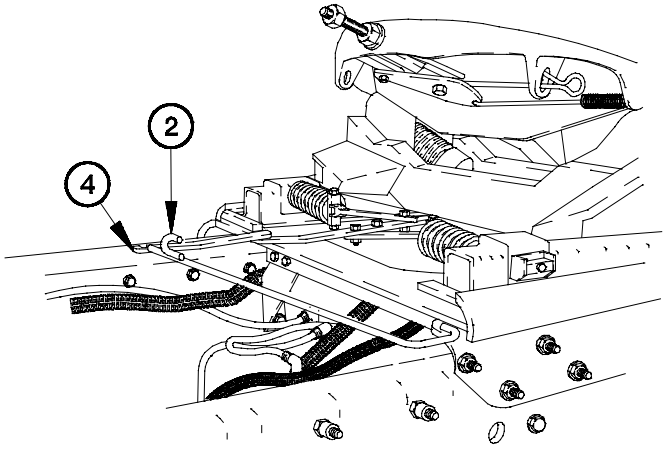

NOTE

Slide carriage will lock into place automatically when slide latch release lever is tripped.

(8) Close slide latch release lever (4) by pushing slide latch release lever down with the point of the release tool (2).

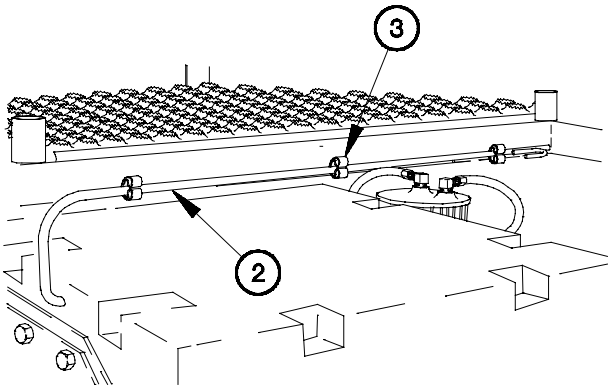

(9) Install release tool (2) in stowage brackets (3).

2-80. M1088 TRACTOR PREPARATION FOR AIR OR SHIP TRANSPORT (CONT)

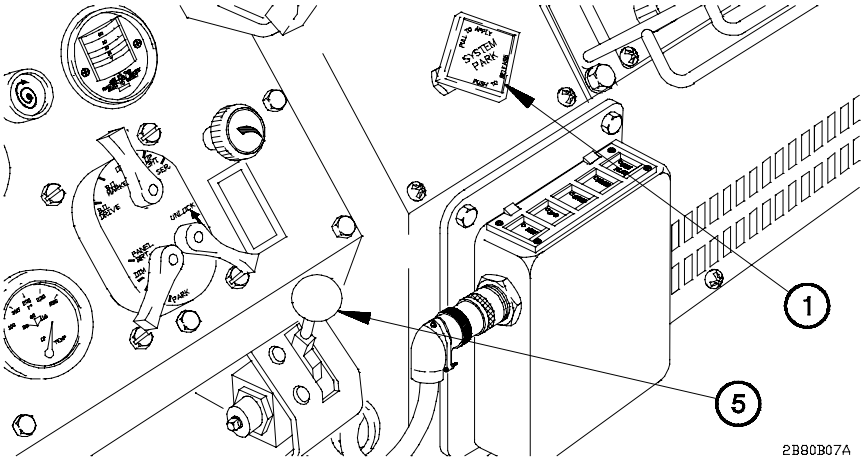

(10) Push in SYSTEM PARK control (1).

(11) Pull up on trailer service brake valve (5).

CHAPTER 3
MAINTENANCE INSTRUCTIONS

Section I. LUBRICATION INSTRUCTIONS 3-1
3-1. LUBRICATION 3-1

Section II. TROUBLESHOOTING INSTRUCTIONS 3-2
3-2. INTRODUCTION 3-2
3-3. TROUBLESHOOTING PROCEDURES 3-2

Section III. MAINTENANCE PROCEDURES 3-87
3-4. INTRODUCTION 3-87
3-5. CHANGING TIRE 3-87
3-6. SERVICING TIRES 3-103
3-7. CLEANING VEHICLE 3-109
3-8. OPENING BATTERY BOX/TESTING BATTERIES 3-115
3-9. SERVICING AIR FILTER (EMERGENCY PROCEDURE) 3-119
3-10. M1093 AIR DROP PREPARATION 3-122
3-11. M1093 AIR DROP RECOVERY OPERATIONS 3-143
3-12. M1094 AIR DROP PREPARATION 3-163
3-13. M1094 AIR DROP RECOVERY OPERATIONS 3-182
3-14. M1083/M1093 TROOPSEAT KIT INSTALLATION/ REMOVAL 3-200
3-15. M1085 TROOPSEAT KIT INSTALLATION/REMOVAL 3-209
3-16. M1090/M1094 TROOPSEAT KIT INSTALLATION/REMOVAL 3-220
3-17. POWER DISTRIBUTION PANEL (PDP) COVER REMOVAL/INSTALLATION 3-228
3-18. REAR SPRING BRAKE CAGING 3-229

Section I. LUBRICATION INSTRUCTIONS

3-1. LUBRICATION

Lubrication instructions are in Appendix F of this TM. All lubrication instructions are mandatory.

Section II. TROUBLESHOOTING INSTRUCTIONS

3-2. INTRODUCTION

Table 3-1 lists common malfunctions you may find with your equipment. Perform the tests, inspections, and corrective actions in the order they appear in the table.

Table 3-1 cannot list all malfunctions that may occur, all tests or inspections needed to find the fault, or all corrective actions needed to correct the fault. If a malfunction is not listed, or actions listed do not correct the fault, notify Unit Maintenance.

3-3. TROUBLESHOOTING PROCEDURES

To quickly find the required troubleshooting procedure, use the Malfunction Index.

Table 3-1. Malfunction Index

Malfunction		Troubleshooting Procedure
	a. ENGINE SYSTEM	
a1.	Engine Does Not Crank	3-19
a2.	Engine Cranks But Does Not Start	3-19
a3.	Low or High Engine Oil Pressure	3-19
a4.	Engine Stalls at Low RPM	3-20
a5.	Engine Overspeeds on Start	3-20
a6.	Too Much Vibration in Engine	3-20
a7.	Coolant in Engine Lubrication Oil	3-21
a8.	Excessive Engine Oil Consumption	3-21
a9.	Engine Overheats	3-21
a10.	Excessive Black or Gray Exhaust Smoke	3-21
a11.	White Exhaust Smoke	3-22
a12.	Engine Speed is Not Stable	3-22
a13.	Engine Starts But Misfires, Runs Rough, or Lacks Power	3-23
a14.	Blue Exhaust Smoke from Engine	3-23

Malfunction		Troubleshooting Procedure
	a. ENGINE SYSTEM (CONT)	
a15.	Low Engine Power	3-24
	b. FUEL SYSTEM	
b1.	Engine Cranks But Does Not Start or Engine Stalls After Starting	3-24
b2.	Ether Starting Aid Does Not Operate	3-24
b3.	Fuel Consumption Too High	3-25
b4.	Accelerator Pedal Sticks	3-25
	c. EXHAUST SYSTEM	
c1.	Exhaust System Unusually Noisy or Vibrates Excessively During Engine Operation	3-25
c2.	Exhaust Fumes in Cab	3-25
	d. COOLING SYSTEM	
d1.	Engine Overheats	3-26
d2.	Oil in Cooling System	3-27
d3.	Loss of Coolant	3-27
	e. ELECTRICAL SYSTEM	
e1.	Engine Does Not Crank	3-31
e2.	12 VDC and 24 VDC Circuits Do Not Operate	3-32
e3.	24 VDC Circuits Do Not Operate	3-32
e4.	Deleted	
e5.	Engine Cranks But Does Not Start	3-32
e6.	Fuel Gage Does Not Operate or is Inaccurate	3-32
e7.	Water Temperature Gage Does Not Operate or is Inaccurate	3-33

Malfunction		Troubleshooting Procedure
	e. ELECTRICAL SYSTEM (Cont)	
e8.	REAR BRAKE AIR Pressure Gage Does Not Operate or is Inaccurate	3-33
e9.	FRONT BRAKE AIR Pressure Gage Does Not Operate or is Inaccurate	3-34
e10.	Engine Oil Pressure Gage Does Not Operate or is Inaccurate	3-35
e11.	Speedometer Does Not Operate or is Inaccurate	3-35
e12.	VOLTS Gage Does Not Operate or is Inaccurate	3-35
e13.	Tachometer Does Not Operate or is Inaccurate	3-35
e14.	Audible Alarm Does Not Operate	3-36
e14a.	Troop Transport Audible Alarm Does Not Operate	3-36
e14b.	Master Power Switch Does Not Operate	3-36
e15.	Lamp Test Switch Does Not Illuminate	3-37
e16.	Radiator Fan Off Switch Does Not Illuminate	3-37
e16a.	Ether Start Switch Does Not Illuminate	3-37
e16b.	Hazard Lights Switch Does Not Illuminate	3-38
e16c.	Amber Warning Light Switch Does Not Illuminate	3-38
e16d.	Master Power Switch Does Not Illuminate	3-38
e17.	Rear Brake Air Gage Does Not Illuminate	3-39
e17a.	Fuel Gage Does Not Illuminate	3-39
e17b.	Front Brake Air Gage Does Not Illuminate	3-40
e17c.	Speedometer Does Not Illuminate	3-40
e17d.	Volts Gage Does Not Illuminate	3-40
e17e.	WATER TEMP Does Not Illuminate	3-41
e17f.	OIL PRESS Gage Does Not Illuminate	3-41

Malfunction		Troubleshooting Procedure
	e. ELECTRICAL SYSTEM (Cont)	
e18.	Auxiliary Panel, Personnel Heater, and Instrument Panel Do Not Illuminate	3-42
e19.	Tachometer Does Not Illuminate	3-42
e20.	Auxiliary Panel Switch Does Not Illuminate	3-43
e21.	Auxiliary Panel Does Not Illuminate	3-43
e22.	High Engine Temperature Indicator Does Not Operate	3-43
e23.	Central Tire Inflation System (CTIS) Overspeed Indicator Does Not Operate	3-44
e24.	Chemical Detector Indicator Does Not Operate	3-44
e25.	Left Turn Signal Indicator Does Not Illuminate	3-45
e26.	Right Turn Signal Indicator Does Not Illuminate	3-45
e27.	Turn Signal Indicators and High Beams On Indicator Do Not Illuminate	3-46
e28.	High Beams On Indicator Does Not Illuminate	3-46
e29.	Parking Brake Indicator and/or Emergency Brake Indicator Does Not Illuminate	3-46
e30.	Power Take-Off (PTO) Indicator Does Not Operate	3-46
e31.	Fan Off Indicator Does Not Operate	3-47
e32.	DUMP BODY UP Indicator Does Not Operate	3-47
e33.	Transmission Temperature Indicator Does Not Operate	3-48
e34.	FRONT BRAKE AIR Indicator Does Not Illuminate When Air Pressure is Below 65 PSI	3-48
e35.	REAR BRAKE AIR Indicator Does Not Illuminate When Air Pressure is Below 65 PSI	3-49
e36.	Engine Oil Pressure Indicator Does Not Operate	3-49
e37.	Master Stop Indicator Does Not Operate	3-50

Malfunction		Troubleshooting Procedure
	e. ELECTRICAL SYSTEM (Cont)	
e38.	One or Both Headlights (High and Low Beam) Do Not Illuminate	3-50
e39.	One or Both Headlight Low Beams Do Not Illuminate	3-51
e40.	One or Both Headlight High Beams Do Not Illuminate	3-51
e41.	Parking Lights Do Not Illuminate	3-51
e42.	LH Door and/or LH Front Marker Lights Do Not Illuminate	3-51
e43.	RH Door and/or RH Front Marker Lights Do Not Illuminate	3-51
e44.	One or More Cab Top Marker Lights Do Not Illuminate	3-52
e45.	Side and/or Rear Marker Lights Do Not Illuminate	3-52
e45a.	All Marker Lights Do Not Operate In Normal Mode	3-52
e46.	One or Both Composite Taillights Do Not Illuminate	3-52
e47.	One or Both Front Blackout Marker Lights Do Not Illuminate	3-53
e48.	Blackout Drive Light Does Not Illuminate	3-53
e49.	One or Both Rear Blackout Marker Lights Do Not Illuminate	3-54
e50.	Amber Warning Light Does Not Illuminate (All Models Except M1089)	3-54
e51.	M1089 Amber Warning Light Does Not Illuminate	3-55
e52.	Backup Light Does Not Illuminate	3-55
e53.	Blackout Marker Lights Do Not Illuminate	3-56
e53a.	Front Hazard Lights Do Not Illuminate	3-56
e54.	Rear Hazard Lights Do Not Illuminate	3-57
e55.	Front and Rear Hazard Lights Do Not Illuminate	3-57
e56.	Front and Rear Turn Signals Do Not Illuminate	3-58
e57.	Left or Right Front Turn Signal Does Not Illuminate	3-58

Malfunction		Troubleshooting Procedure
	e. ELECTRICAL SYSTEM (Cont)	
e58.	One or Both Stoplights Do Not Illuminate	3-59
e59.	One or Both Blackout Stoplights Do Not Operate	3-59
e60.	Stoplights and Blackout Stoplights Do Not Illuminate	3-59
e61.	Stoplights Do Not Operate When M1088 Trailer Brakes Are Applied	3-60
e62.	Trailer Marker/Taillights Do Not Illuminate	3-60
e63.	Trailer Right Stop/Turn Light Does Not Illuminate	3-60
e64.	Trailer Left Stop/Turn Light Does Not Illuminate	3-60
e65.	Trailer Blackout Marker Lights Do Not Illuminate	3-60
e66.	Trailer Blackout Stoplights Do Not Illuminate	3-60
e67.	Intervehicle Clearance Lights Do Not Operate	3-60
e68.	Intervehicle Left Turn Signal Does Not Operate	3-60
e69.	Intervehicle Right Turn Signal Does Not Operate	3-61
e70.	Intervehicle Stoplights Do Not Operate	3-61
e71.	Intervehicle Taillights Do Not Operate	3-61
e72.	Personnel Heater Control Illumination Does Not Operate	3-61
e73.	Personnel Heater Fan Does Not Operate	3-61
e74.	Windshield Washer Does Not Operate	3-62
e75.	Windshield Wiper Does Not Operate on Low Speed	3-62
e76.	All Windshield Wiper Speeds Do Not Operate	3-62
e77.	Windshield Wiper Does Not Operate on Intermittent Speed	3-63
e78.	Windshield Wiper Does Not Operate on High Speed	3-63
e79.	Horn Does Not Operate	3-63

Malfunction		Troubleshooting Procedure
	e. ELECTRICAL SYSTEM (Cont)	
e80.	Chemical Alarm Does Not Operate	3-64
e81.	Chemical Detector Does Not Operate	3-64
e82.	Central Tire Inflation System (CTIS) Does Not Operate	3-65
e83.	Central Tire Inflation System (CTIS) Does Not Inflate Tires	3-65
e84.	Central Tire Inflation System (CTIS) Does Not Deflate Tires	3-65
e85.	15K Self-Recovery Winch (SRW) Does Not Reel In or Pay Out	3-66
e86.	15K Self-Recovery Winch (SRW) Does Not Reel In	3-66
e87.	15K Self-Recovery Winch (SRW) Does Not Pay Out	3-67
e88.	Power Take-Off (PTO) Does Not Operate	3-67
e89.	Electrical System Does Not Maintain a Charge	3-68
e90.	WTEC II Transmission ECU Pushbutton Shift Selector (TEPSS) Illumination Does Not Dim	3-68
e91.	Differential Lock Solenoid Does Not Operate	3-69
e92.	Engine Fan Runs Constantly	3-69
e93.	Engine Fan Does Not Turn Off Using Radiator Fan Off Switch	3-69
e94.	Ether Start Does Not Operate	3-70
e95.	Excessive Condensation in Fuel	3-70
e96.	Radio Does Not Operate	3-70
e97.	Start Inhibit Pushbutton Does Not Operate	3-71
e98.	Air Dryer Does Not Operate (All Models Except M1090/M1094)	3-71
e99.	M1090/M1094 Air Dryer Does Not Operate	3-71
e100.	Battery Tester Does Not Operate	3-71
e101.	M1084/M1086 Material Handling Crane (MHC) Does Not Operate	3-71

Malfunction		Troubleshooting Procedure
	e. ELECTRICAL SYSTEM (Cont)	
e102.	M1084/M1086 Material Handling Crane (MHC) Does Not Operate From REMOTE CONTROL UNIT	3-71
e103.	M1084/M1086 Material Handling Crane (MHC) Hoist Up Does Not Operate From Remote Station	3-71
e104.	M1084/M1086 Material Handling Crane (MHC) Hoist Down Does Not Operate From Remote Station	3-72
e105.	M1084/M1086 Material Handling Crane (MHC) Boom Up Does Not Operate From Remote Station	3-72
e106.	M1084/M1086 Material Handling Crane (MHC) Boom Down Does Not Operate From Remote Station	3-72
e107.	M1084/M1086 Material Handling Crane (MHC) Telescope In Does Not Operate From Remote Station	3-72
e108.	M1084/M1086 Material Handling Crane (MHC) Telescope Out Does Not Operate From Remote Station	3-72
e109.	M1084/M1086 Material Handling Crane (MHC) Swing CW Does Not Operate From Remote Station	3-72
e110.	M1084/M1086 Material Handling Crane (MHC) Swing CCW Does Not Operate From Remote Station	3-72
e111.	M1084/M1086 Material Handling Crane (MHC) Overload Shutdown System Does Not Activate	3-72
e112.	M1084/M1086 Material Handling Crane (MHC) Overload Shutdown System Stays Activated	3-72
e113.	M1084/M1086 Material Handling Crane (MHC) Hoist Up Lockout Does Not Activate	3-72
e114.	M1084/M1086 Material Handling Crane (MHC) Boom Down Lockout Does Not Activate	3-72
e115.	M1084/M1086 Material Handling Crane (MHC) Boom Up Lockout Does Not Activate	3-73
e116.	M1084/M1086 Material Handling Crane (MHC) Telescope Out Lockout Does Not Activate	3-73

Malfunction		Troubleshooting Procedure
	e. ELECTRICAL SYSTEM (Cont)	
e117.	M1089 Material Handling Crane (MHC) Does Not Operate	3-73
e118.	M1089 Material Handling Crane (MHC) Does Not Operate From REMOTE CONTROL UNIT	3-73
e119.	M1089 Material Handling Crane (MHC) Hoist Up Does Not Operate From Remote Station	3-73
e120.	M1089 Material Handling Crane (MHC) Hoist Down Does Not Operate From Remote Station	3-73
e121.	M1089 Material Handling Crane (MHC) Boom Up Does Not Operate From Remote Station	3-73
e122.	M1089 Material Handling Crane (MHC) Boom Down Does Not Operate From Remote Station	3-73
e123.	M1089 Material Handling Crane (MHC) Telescope In Does Not Operate From Remote Station	3-73
e124.	M1089 Material Handling Crane (MHC) Telescope Out Does Not Operate From Remote Station	3-73
e125.	M1089 Material Handling Crane (MHC) Swing CW Does Not Operate From Remote Station	3-73
e126.	M1089 Material Handling Crane (MHC) Swing CCW Does Not Operate From Remote Station	3-74
e127.	M1089 Material Handling Crane (MHC) Hoist Up Lockout Does Not Activate	3-74
e128.	M1089 Material Handling Crane (MHC) Boom Down Lockout Does Not Activate	3-74
e129.	M1089 Material Handling Crane (MHC) Boom Up Lockout Does Not Activate	3-74
e130.	M1089 Material Handling Crane (MHC) Telescope Out Lockout Does Not Activate	3-74
e131.	M1089 Material Handling Crane (MHC) Overload Shutdown System Does Not Activate	3-74

Malfunction		Troubleshooting Procedure
	e. ELECTRICAL SYSTEM (Cont)	
e132.	M1089 Material Handling Crane (MHC) Overload Shutdown System Stays Activated	3-74
e133.	All Wrecker Functions Do Not Operate From Wrecker Control Panel and Wrecker Remote Control	3-74
e134.	All Wrecker Functions Do Not Operate From Wrecker Remote Control	3-74
e135.	All Wrecker Functions Do Not Operate From Wrecker Control Panel	3-74
e135a.	M1089 LH or RH 30K Winch Does Not Pay-In	3-74
e136.	Main Winch LH or RH Speed Switch Does Not Operate	3-75
e137.	Main Winch LH or RH Freespool Switch Does Not Operate From Wrecker Control Panel	3-77
e138.	One Wrecker Function Does Not Operate From Wrecker Remote Control	3-77
e139.	M1090/M1094 Tailgate Release Does Not Operate	3-77
e140.	DUMP BED UP Does Not Operate	3-77
e141.	DUMP BED DOWN Does Not Operate	3-77
e142.	Transmission Auxiliary Oil Cooler Fan(s) Runs Constantly	3-77
e143.	Transmission Auxiliary Oil Cooler Fan Does Not Operate (All Models Except M1088/M1089)	3-78
e144.	M1088/M1089 Transmission Auxiliary Oil Cooler Fan Does Not Operate	3-78
e145.	M1088/M1089 Worklights Do Not Illuminate	3-78
e146.	M1088/M1089 (LH) Worklight Does Not Illuminate	3-79
e147.	M1088/M1089 (RH) Worklight Does Not Illuminate	3-79
e148.	M1088/M1089 Worklights Do Not Illuminate in Blackout Mode With Blackout Override Switch On	3-79

Malfunction		Troubleshooting Procedure
	e. ELECTRICAL SYSTEM (Cont)	
e149.	M1084/M1086 Worklights Do Not Illuminate	3-79
	f. TRANSMISSION SYSTEM	
f1.	WTEC II Transmission ECU Pushbutton Shift Selector (TEPSS) Emits Eight Seconds of Beeps and/or Transmission Does Not Shift Gears	3-79
f1a.	WTEC II Transmission ECU Pushbutton Shift Selector (TEPSS) Does Not Illuminate	3-80
f2.	Transmission Unusually Noisy When Operating	3-80
f3.	WTEC III Transmission Pushbutton Shift Selector (TPSS) Displays "--" and/or Transmission Does Not Shift Gears	3-80
f4.	WTEC III Transmission Pushbutton Shift Selector (TPSS) Does Not Illuminate	3-80
	g. PROPELLER SHAFT	
g1.	Propeller Shafts or Universal Joints Unusually Noisy When Operating	3-81
	h. POWER TAKE OFF (PTO)	
h1.	Power Take-Off (PTO) Does Not Engage	3-81
	i. BRAKE SYSTEM	
i1.	Excessive Braking Distance	3-81
i2.	Rear Brakes Do Not Apply	3-81
i3.	Parking Brake(s) Will Not Release	3-82
i4.	Front brakes Overheat and/or Do Not Release	3-82
i5.	Vehicle Brakes Unevenly, Brakes Pull to One Side or Grab	3-83
i6.	Front Brakes Do Not Apply	3-83
i7.	Rear Brakes Overheat	3-83
i8.	Parking Brakes Do Not Apply	3-83

Malfunction		Troubleshooting Procedure
	i. BRAKE SYSTEM (CONT)	
i9.	Brake System Loses Air When Service Brakes Are Applied	3-83
	j. AIR SYSTEM	
j1.	Air System Loses Pressure During Operation/Slow, No, or Incorrect Air Pressure Buildup	3-84
j2.	Large Quantity of Moisture Expelled From Air Reservoirs	3-84
j3.	Air Dryer Purges Constantly	3-84
j4.	No Air Pressure Present at Rear Gladhand(s) (All Models Except M1088)	3-84
j4a.	No Air Pressure Present at All M1088 Rear and Fifth Wheel Gladhands	3-84
j4b.	No Air Pressure Present at M1088 Rear and Fifth Wheel Emergency Gladhand(s)	3-84.1
j4c.	No Air Pressure Present at M1088 Rear and Fifth Wheel Service Gladhand(s)	3-84.2
j4d.	M1088 Trailer Handbrake Control Does Not Operate	3-84.2
j5.	Air System Pressure Builds Up More Than 120 psi (827 kPa) (Compressor Fails to Unload)	3-84.3
j6.	Noisy Air Compressor Operation	3-84.3
j7.	M1088 Rear Gladhand(s) Leaks or Does Not Operate	3-84.3
j8.	M1090/M1094 Tailgate Release Does Not Operate	3-84.3
	k. WHEEL	
k1.	Tires Wear Unevenly or Excessively	3-84.3
k2.	Wheel Wobbles or Shimmies	3-84.4
	l. HYDRAULIC SYSTEM	
l1.	Loss of Hydraulic Pressure (Single Stage Pump)	3-84.4
l2.	Loss of Hydraulic Pressure (Three Stage Pump)	3-84.5

Malfunction		Troubleshooting Procedure
	m. CENTRAL TIRE INFLATION SYSTEM (CTIS)	
m1.	Two Steady Mode Lights Illuminate on Central Tire Inflation System (CTIS) ECU	3-84.5
m2.	Four Central Tire Inflation System (CTIS) ECU Indicator Lights Flashing	3-84.5
m3.	Five Central Tire Inflation System (CTIS) ECU Indicator Lights Flashing	3-84.5
m4.	Central Tire Inflation System (CTIS) Repeatedly Resumes Cycling 30 Seconds After Indicator Lights Stop Flashing	3-84.5
m5.	Central Tire Inflation System (CTIS) ECU Indicates No Fault Code But System Fails to Inflate or Deflate	3-84.5
m6.	No Overspeed Warning Light and/or Overspeed Pressure Change	3-84.6
	n. AXLE	
n1.	Axle Differential(s) Noisy	3-84.6
	p. STEERING SYSTEM	
p1.	Hard to Steer	3-84.6
p2.	Wanders, Pulls to One Side, or Shimmies	3-84.7
p3.	Excessive Play When Turning Steering Wheel	3-84.8
p4.	No Response When Turning Steering Wheel	3-84.8
	q. FIFTH WHEEL	
q1.	Fifth Wheel Does Not Lock When Coupling Trailer to Tractor	3-84.8
q2.	Excessive Movement of Trailer King Pin in Fifth Wheel	3-84.9
q3.	Fifth Wheel Does Not Unlock When Disconnecting Trailer From Tractor	3-84.9
q4.	Fifth Wheel Sliding Mechanism Does Not Operate	3-84.9

Malfunction		Troubleshooting Procedure
	r. SUSPENSION SYSTEM	
r1.	Wanders, Pulls to One Side, or Shimmies	3-84.9
r2.	Leans to One Side or Rear of Vehicle Sags	3-84.9
	s. 15K SELF-RECOVERY WINCH (SRW) SYSTEM	
s1.	15K Self-Recovery Winch (SRW) Does Not Work	3-84.10
	t. STEERING HYDRAULIC SYSTEM	
t1.	Steering Hard or Does Not Work	3-84.11
	u. AIR TRANSPORT SYSTEM	
u1.	Cab Tilt, Spare Tire Retainer, and Suspension Compression Do Not Work	3-84.12
u2.	Suspension Does Not Compress or Return to Normal Properly	3-84.12
u3.	Cab Leveling Air Springs Do Not Work Properly	3-84.12
	v. DUMP BODY HYDRAULIC SYSTEM	
v1.	Dump Body Does Not Raise	3-84.13
v2.	Dump Body Does Not Lower	3-84.13
v3.	Dump Body Creeps Down From Raised Position	3-84.14
	w. WRECKER HYDRAULIC SYSTEM	
w1.	M1089 Material Handling Crane (MHC) Does Not Operate	3-84.14
w2.	M1089 Stifflegs/Left 30K Winch/15K Self-Recovery Winch (SRW) Do Not Operate	3-84.14
w3.	M1089 Stiffleg(s) Does Not Operate or Operates Slowly	3-84.14
w4.	M1089 LH 30K Winch Does Not Operate	3-84.14
w5.	M1089 Stinger/Telescopic Lift Cylinders/Fold Cylinder/Right 30K Winch Do Not Operate	3-84.14
w6.	M1089 Stinger Does Not Operate	3-84.14

Malfunction		Troubleshooting Procedure
	w. WRECKER HYDRAULIC SYSTEM (CONT)	
w7.	M1089 Underlift Telescopic Lift Cylinder(s) Does Not Operate	3-84.15
w8.	M1089 Fold Cylinder Does Not Operate	3-84.15
w9.	M1089 RH 30K Winch Does Not Operate	3-84.15
w10.	M1089 Material Handling Crane (MHC) Hand Pump Does Not Work	3-84.15
w11.	No Service or External Hydraulic Power From M1089	3-84.15
w12.	M1089 Material Handling Crane (MHC) Left or Right Outrigger (Jack) Drifts or Does Not Work	3-84.15
w13.	M1089 Material Handling Crane (MHC) Mast Does Not Erect or Stow	3-84.15
w14.	M1089 Material Handling Crane (MHC) Outrigger Extension Cylinder Does Not Work	3-84.16
w15.	M1089 Material Handling Crane (MHC) Boom Swing Drive Assembly Does Not Work	3-84.16
w16.	M1089 Material Handling Crane (MHC) Boom Does Not Lift Up or Down	3-84.16
w17.	M1089 Material Handling Crane (MHC) Boom Does Not Telescope In or Out	3-84.16
w18.	M1089 Material Handling Crane (MHC) Hoist Does Not Work	3-84.16
w19.	M1089 Left Stiffleg Drifts or Does Not Work	3-84.16
w20.	M1089 Right Stiffleg Drifts or Does Not Work	3-84.16
w21.	M1089 Pay-out Hydraulic Motor Assembly Does Not Work	3-84.16
	x. SPECIAL PURPOSE KIT	
x1.	Deleted	
x2.	Deleted	
x3.	Deleted	

Malfunction		Troubleshooting Procedure

x. SPECIAL PURPOSE KIT (CONT)

x4. Deleted

x5. Deleted

x6. Deleted

x7. Deleted

x8. Deleted

x9. Deleted

x10. Deleted

x11. Deleted

x12. Deleted

x13. Deleted

x14. Deleted

x15. Deleted

x16. Deleted

x17. Troop Transport Alarm Does Not Operate 3-84.17

x18. Light Material Handling Crane (LMHC) Does Not Operate 3-84.17

x19. Light Material Handling Crane (LMHC) Hoist In Does Not Operate 3-84.17

x20. Light Material Handling Crane (LMHC) Hoist Out Does Not Operate 3-84.17

y. M1084/M1086 MATERIAL HANDLING CRANE (MHC) HYDRAULICS

y1. M1084/M1086 Material Handling Crane (MHC) Hand Pump Does Not Work 3-84.17

y2. M1084/M1086 Material Handling Crane (MHC) Hydraulic Functions Operate Slowly 3-84.18

Malfunction		Troubleshooting Procedure
y. M1084/M1086 MATERIAL HANDLING CRANE (MHC) HYDRAULICS (CONT)		
y3.	M1084/M1086 Material Handling Crane (MHC) Left Outrigger (Jack) Drifts or Does Not Operate	3-84.18
y4.	M1084/M1086 Material Handling Crane (MHC) Right Outrigger (Jack) Drifts or Does Not Operate	3-84.18
y5.	M1084/M1086 Material Handling Crane (MHC) Mast Does Not Erect	3-84.18
y6.	M1084/M1086 Material Handling Crane (MHC) Hoist Does Not Operate	3-84.18
y7.	M1084/M1086 Material Handling Crane (MHC) Swing Drive Does Not Operate	3-84.18
y8.	M1084/M1086 Material Handling Crane (MHC) Boom Does Not Telescope In or Out	3-84.19
y9.	M1084/M1086 Material Handling Crane (MHC) Swing, Telescope, Boom, and Hoist Do Not Operate	3-84.19
y10.	M1084/M1086 Material Handling Crane (MHC) Boom Does Not Lift Up or Down or Hold Under Load	3-84.19
z. CAB TILT AND SPARE TIRE RETAINER		
z1.	Cab Does Not Raise	3-84.19
z2.	Cab Does Not Lower	3-84.19
z3.	Spare Tire Retainer Does Not Raise	3-84.19
z4.	Spare Tire Retainer Does Not Lower	3-84.19
aa. M1089 AIR SYSTEM TROUBLESHOOTING		
aa1.	M1089 LH or RH 30K Winch Does Not Pay-In	3-85
aa2.	Main Winch LH Freespool Does Not Operate	3-85
aa3.	Main Winch RH Freespool Does Not Operate	3-85
aa4.	Main Winch LH and RH Freespool Do Not Operate	3-85

Malfunction — Troubleshooting Procedure

aa. M1089 AIR SYSTEM TROUBLESHOOTING (CONT)

aa5. M1089 LH or RH 30K Winch Cable Drum Tensioner Does Not Operate 3-85

aa6. One Wrecker Function Does Not Operate From Wrecker Remote Control 3-86

ab. FRAME TROUBLESHOOTING

ab1. Tires Continue to Wear After Front End Alignment and/or Vehicle Drives Sideways Down Road 3-86

Table 3-2. Troubleshooting

MALFUNCTION TEST OR INSPECTION CORRECTIVE ACTION
NOTE If corrective action does not correct malfunction, notify Unit Maintenance. **a. ENGINE SYSTEM** **a1. ENGINE DOES NOT CRANK.** Step 1. Check to see if battery cables and terminal posts are OK. (a) Remove battery box cover (para 3-8a). (b) Check battery cables for damage and corrosion. If corrosion is present or battery cables are damaged, notify Unit Maintenance. (c) Check terminal posts for corrosion. If corrosion is present, notify Unit Maintenance. Step 2. Check fluid level in battery cells (para 3-8b). If fluid level is low, notify Unit Maintenance. If fluid level is not low, notify Unit Maintenance. (a) Install battery box (para 3-8c). **a2. ENGINE CRANKS BUT DOES NOT START.** Step 1. Check fluid level. (a) Position master power switch to on (para 2-1a). If fuel gage shows fuel level at or below E (empty), fuel vehicle (para 2-26a). (b) Position master power switch to off (para 2-1a). Step 2. Is fuel/water separator primed? (a) Raise cab (para 2-28a). (b) Depress button on fuel/water separator as many time as necessary until button is tight. (c) Attempt to start engine (para 2-27a or b). If engine cranks but does not start, notify Unit Maintenance. (d) Lower cab (para 2-28b). **a3. LOW OR HIGH ENGINE OIL PRESSURE.** Step 1. Check for proper engine oil level.

Table 3-2. Troubleshooting (Cont)

MALFUNCTION TEST OR INSPECTION CORRECTIVE ACTION
a3. LOW OR HIGH ENGINE OIL PRESSURE (CONT).
(a) Raise cab (para 2-28a).
(b) Check engine oil level (para 2-18, item 34).
(c) If engine oil level is low, add engine oil (Appendix F).
(d) If engine oil level is high, notify Unit Maintenance.
Step 2. Check engine oil for contamination.
(a) If engine oil is contaminated, notify Unit Maintenance.
(b) Lower cab (para 2-28b).
(c) If engine oil pressure is still high or low, notify Unit Maintenance.
a4. ENGINE STALLS AT LOW RPM.
Step 1. Check for restricted air filter (para 2-27a or b).
(a) If restricted, clean air filter element (para 3-9).
(b) If air filter element will not clean, notify Unit Maintenance.
Step 2. Check air cleaner hoses and pipe for kinks and damage.
(a) Check air particle restriction hose for kinks and damage.
(b) Raise cab (para 2-28a).
(c) Check air cleaner to turbocharger pipe and hose for kinks or damage.
(d) If pipe or hose(s) are damaged or kinked, notify Unit Maintenance.
(e) Lower cab (para 2-28b).
(f) If engine stalls at low rpm, notify Unit Maintenance.
a5. ENGINE OVERSPEEDS ON START.
Notify Unit Maintenance.
a6. TOO MUCH VIBRATION IN ENGINE.
Step 1. Check for restricted air filter (para 2-27a or b).
(a) If restricted, clean air filter element (para 3-9).
(b) If air filter element will not clean, notify Unit Maintenance.
Step 2. Check for loose vibration damper and/or missing bolts and damage.
(a) Raise cab (para 2-28a).
(b) Visually check vibration damper for loose and/or missing bolts and damage.

Table 3-2. Troubleshooting (Cont)

MALFUNCTION TEST OR INSPECTION CORRECTIVE ACTION
a. ENGINE SYSTEM (CONT)
a6. TOO MUCH VIBRATION IN ENGINE (CONT).
(c) If vibration damper bolts are loose or missing or vibration damper is damaged, notify Unit Maintenance.
(d) Lower cab (para 2-28b).
(e) If engine still vibrates too much, notify Unit Maintenance.
a7. COOLANT IN ENGINE LUBRICATION OIL.
Notify Unit Maintenance.
a8. EXCESSIVE ENGINE OIL CONSUMPTION.
Step 1. Check for proper engine oil level.
(a) Raise cab (para 2-28a).
(b) Check engine oil level (para 2-18, item 34).
(c) If engine oil level is low, add engine oil (Appendix F).
(d) If engine oil level is high, notify Unit Maintenance.
Step 2. Check for Class II and Class III oil leaks.
(a) Visually check oil lines, engine block, and oil filter for Class II and Class III oil leaks.
(b) If Class II and/or Class III oil leaks are found, notify Unit Maintenance.
(c) Lower cab (para 2-28b).
(d) If oil consumption is still excessive, notify Unit Maintenance.
a9. ENGINE OVERHEATS.
Perform Cooling System Troubleshooting (d1. Engine Overheats).
a10. EXCESSIVE BLACK OR GRAY EXHAUST SMOKE.
Step 1. Check for restricted air filter (para 2-27a or b).
(a) If restricted, clean air filter element (para 3-9).
(b) If air filter element will not clean, notify Unit Maintenance.
Step 2. Check air cleaner hoses and pipe for kinks and damage.
(a) Check air particle restriction hose for kinks and damage.
(b) Raise cab (para 2-28a).

Table 3-2. Troubleshooting (Cont)

MALFUNCTION TEST OR INSPECTION CORRECTIVE ACTION
a10. EXCESSIVE BLACK OR GRAY EXHAUST SMOKE. (CONT)
(c) Check air cleaner to turbocharger pipe and hose for kinks or damage.
(d) If pipe or hose(s) is damaged or kinked, notify unit Maintenance.
(e) Lower cab (para 2-28b).
(f) If excessive black or gray smoke is still seen from engine, notify Unit Maintenance.
a11. WHITE EXHAUST SMOKE.
Check for restricted air filter (para 2-27a or b).
(a) If restricted, clean air filter element (para 3-9).
(b) If air filter element will not clean, notify Unit Maintenance.
(c) If white exhaust smoke is still seen from engine, notify Unit Maintenance.
a12. ENGINE SPEED IS NOT STABLE.
Step 1. Check for restricted air filter (para 2-27a or b).
(a) If restricted, clean air filter element (para 3-9).
(b) If air filter element will not clean, notify Unit Maintenance.
Step 2. Check for fuel leaks.
(a) Raise cab (para 2-28a).
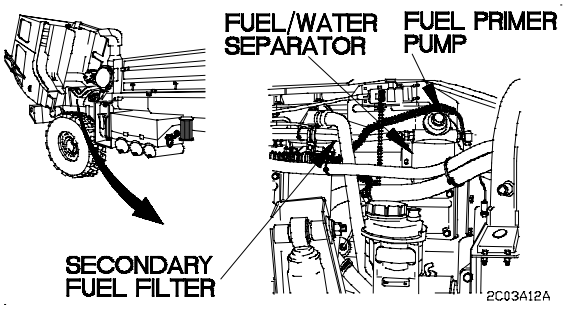
(b) Check secondary fuel filter, fuel lines, fuel fittings, draincocks, fuel tank lines and tank, and other lines that hold fuel for leaks.
(c) If any fuel leaks are found, notify Unit Maintenance.
(d) Lower cab (para 2-28b).
(e) If engine speed is still not stable, notify Unit Maintenance.

Table 3-2. Troubleshooting (Cont)

MALFUNCTION TEST OR INSPECTION CORRECTIVE ACTION
a. ENGINE SYSTEM (CONT)
a13. ENGINE STARTS BUT MISFIRES, RUNS ROUGH, OR LACKS POWER.
Step 1. Check for restricted air filter (para 2-27a or b).
(a) If restricted, clean air filter element (para 3-9).
(b) If air filter element will not clean, notify Unit Maintenance.
Step 2. Check for fuel leaks.
(a) Raise cab (para 2-28a).

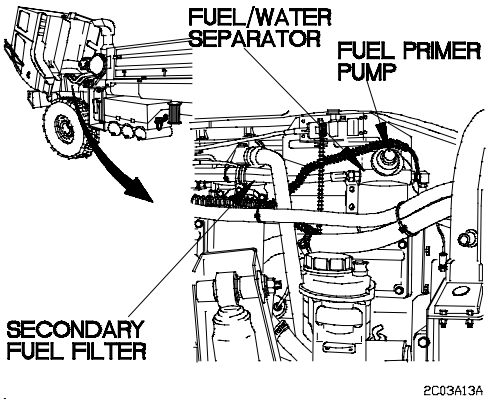

(b) Check secondary fuel filter, fuel lines, fuel fittings, draincocks, fuel tank lines and tank, and other lines that hold fuel for leaks.
(c) If any fuel leaks are found, notify Unit Maintenance.
(d) Lower cab (para 2-28b).
(e) If engine starts but misfires, runs rough, or lacks power, notify Unit Maintenance.
a14. BLUE EXHAUST SMOKE FROM ENGINE.
Check for proper engine oil level.
(a) Raise cab (para 2-28a).
(b) Check engine oil level (para 2-18, item 34).
(c) If engine oil level is low, add engine oil (Appendix F).
(d) If engine oil level is high, notify Unit Maintenance.
(e) Lower cab (para 2-28b).
(f) If blue exhaust smoke is still seen from engine, notify Unit Maintenance.

Table 3-2. Troubleshooting (Cont)

MALFUNCTION TEST OR INSPECTION CORRECTIVE ACTION
a15. LOW ENGINE POWER.
Step 1. Check fuel tank for contamination.
If fuel tank contains contamination in fuel, notify Unit Maintenance.
Step 2. Check for proper engine oil level.
(a) Raise cab (para 2-28a).
(b) Check engine oil level (para 2-18, item 34).
(c) If engine oil level is low, add engine oil (Appendix F).
(d) If engine oil level is high, notify Unit Maintenance.
Step 3. Check for restricted air filter (para 2-27a or b).
(a) If restricted, clean air filter element (para 3-9).
(b) If air filter element will not clean, notify Unit Maintenance.
Step 4. Check air cleaner hoses and pipe for kinks and damage.
(a) Check air particle restriction hose for kinks and damage.
(b) Check air cleaner to turbocharger pipe and hose for kinks or damage.
(c) If pipe or hose(s) are damaged or kinked, notify Unit Maintenance.
(d) Lower cab (para 2-28b).
(e) If engine has low power, notify Unit Maintenance.
b. FUEL SYSTEM
b1. ENGINE CRANKS BUT DOES NOT START OR ENGINE STALLS AFTER STARTING.
Step 1. Perform Engine System Troubleshooting (a2. Engine Cranks But Does Not Start).
Step 2. Check to see if fuel tank is empty.
(a) If fuel tank is empty, fill fuel tank (para 2-26a).
(b) If engine still cranks but does not start, perform Engine System Troubleshooting (e5. Engine Cranks But Does Not Start).
b2. ETHER STARTING AID DOES NOT OPERATE.
Notify Unit Maintenance.

Table 3-2. Troubleshooting (Cont)

MALFUNCTION TEST OR INSPECTION CORRECTIVE ACTION
b. FUEL SYSTEM (CONT)
b3. FUEL CONSUMPTION TOO HIGH.
Check for fuel leaks.
(a) Raise cab (para 2-28a).

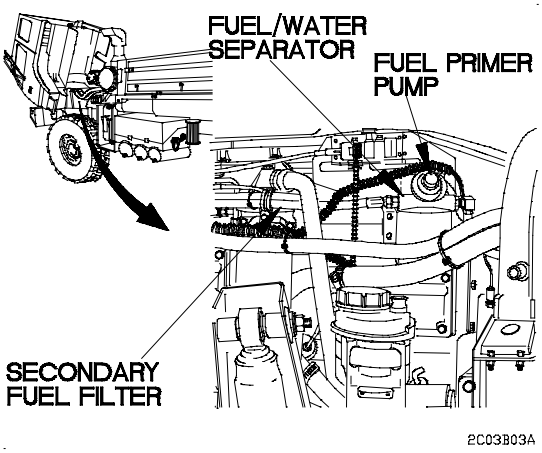

(b) Check secondary fuel filter, fuel lines, fuel fittings, draincocks, fuel tank lines and tank, and other lines that hold fuel for leaks.
(c) If any fuel leaks are found, notify Unit Maintenance.
(d) If fuel consumption is still too high, notify Unit Maintenance.
(e) Lower cab (para 2-28b).
b4. ACCELERATOR PEDAL STICKS.
Notify Unit Maintenance.
c. EXHAUST SYSTEM
c1. EXHAUST SYSTEM UNUSUALLY NOISY OR VIBRATES EXCESSIVELY DURING ENGINE OPERATION.
Notify Unit Maintenance.
c2. EXHAUST FUMES IN CAB.
Notify Unit Maintenance.

Table 3-2. Troubleshooting (Cont)

MALFUNCTION TEST OR INSPECTION CORRECTIVE ACTION
d. COOLING SYSTEM
d1. ENGINE OVERHEATS.

WARNING

Extreme care should be taken when removing coolant fill cap if temperature gage reads above 180°F. Contact with steam or hot coolant under pressure may result. Failure to comply may result in injury to personnel.

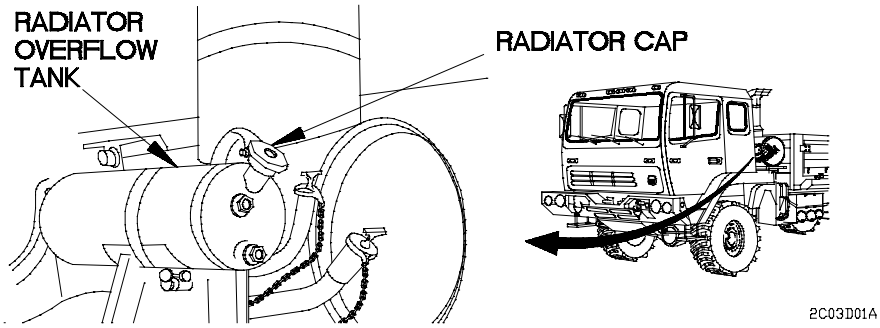

Step 1. Check coolant level at radiator overflow tank.

If low, add coolant as required (Appendix F).

Step 2. Check radiator cap for leakage and damage.

If leaking or damaged, notify Unit Maintenance.

Step 3. Check radiator overflow tank and hoses for leaks and damage.

If leaking or damaged, notify Unit Maintenance.

Step 4. Check outside of radiator core for obstructions.

(a) Raise cab (para 2-28a).

(b) Check radiator fins for obstructions.

(c) If clogged, remove debris.

Table 3-2. Troubleshooting (Cont)

MALFUNCTION TEST OR INSPECTION CORRECTIVE ACTION
d. COOLING SYSTEM (CONT)
d1. ENGINE OVERHEATS (CONT).
Step 5. Check for leakage from radiator hoses and hose connections.
(a) If loose, tighten.
(b) If damaged, notify Unit Maintenance.
Step 6. Check for leakage from radiator hoses and hose connections.
(a) Lower cab (para 2-28b).
(b) If engine continues to overheat, notify Unit Maintenance.
d2. OIL IN COOLING SYSTEM.
Notify Unit Maintenance.
d3. LOSS OF COOLANT.
WARNING **Extreme care should be taken when removing coolant fill cap if temperature gage reads above 180°F. Contact with steam or hot coolant under pressure may result. Failure to comply may result in injury to personnel.**
Step 1. Check radiator cap for leakage and damage.
If leaking or damaged, notify Unit Maintenance.
Step 2. Check radiator overflow tank and hoses for leaks and damage.
If leaking or damaged, notify Unit Maintenance.
Step 3. Check radiator fins for obstructions.
(a) Raise cab (para 2-28a).
(b) Check radiator fins for obstructions.
(c) If clogged, remove debris.
Step 4. Check all hoses and connections for visual signs of leakage.
(a) If loose, tighten.
(b) If damaged, notify Unit Maintenance.
(c) Lower cab (para 2-28b).
(d) If coolant loss is still seen, notify Unit Maintenance.

Table 3-2. Troubleshooting (Cont)

MALFUNCTION
TEST OR INSPECTION
CORRECTIVE ACTION

e. ELECTRICAL SYSTEM

NOTE

This table is used to identify circuit breakers for electrical system troubleshooting.

Reference Designator	Function	CB Amps	Circuit Voltage
CB20	Cab Radio	25	24
CB21	Air Dryer, Dump Up Indicator Light, Dump Up Indicator Switch, Frequency Divider, Interaxle Differential Solenoid, and Starter Pushbutton Switch	15	24
CB22	Engine Fan Off Switch, Ether Start Solenoid, Ether Start Switch, Ether Sensor, Fan Solenoid, and Water Temperature Switch (fan)	10	24
CB23	Personnel Heater	15	24
CB30	Chemical Alarm, Chemical Detector, and Chemical Detector Indicator Light	10	24
CB35	WTEC II TEPSS and WTEC II VIM	15	12
CB36	Horn	20	24
CB37	Windshield Wiper ECU and Wiper Motor	20	24
CB38	Rotating Warning Light(s)	20	12
CB39	24 VDC Intervehicular Blackout Stop Light	10	24
CB40	CTIS, CTIS Air Pressure Switch, CTIS Overspeed Indicator Light	10	24
CB41	24 VDC Intervehicular Clearance and Rear Light	15	24
CB42	24 VDC Intervehicular Blackout Clearance, Left Blackout Marker, and Right Blackout Marker	10	24
CB43	(WTEC II) 24 VDC Intervehicular Left Turn and Spotlight/WTEC III Transmission ECU	15	24
CB44	(WTEC II) 24 VDC Intervehicular Right Turn and Stoplight/(WTEC III) 24 VDC Intervehicular left and Right Turn Signals and Stoplights	15	24
CB49	Fuel Water Separator, PTO Solenoid, PTO Switch, Winch In Solenoid, Winch In/Out Switch, Winch Out Solenoid, and Winch Switch	15	24
CB50	Dump Down Solenoid, Dump Up Solenoid, Dump Up/Down Solenoid, Tailgate Release Solenoid, Tailgate Release Switch, Wrecker Control Panel, and Wrecker Remote Control	15	24
CB53	Material Handling Crane	15	12

Table 3-2. Troubleshooting (Cont)

MALFUNCTION
TEST OR INSPECTION
CORRECTIVE ACTION

e. ELECTRICAL SYSTEM (CONT)

Reference Designator	Function	CB Amps	Circuit Voltage
CB54	Blackout Drive Light	8	12
CB65	Front Left and Right Parking Light	8	12
CB66	Front Left Blackout Marker, Front Right Blackout Marker, Rear LH Blackout Marker, Rear RH Blackout Marker, and WTEC II/III TPSS Dimmer Module	8	12
CB67	12 VDC Intervehicular Marker Lights and All Marker Lights	25	12
CB68	M1088/M1089 Auxiliary Oil Coolers Fan Motors	25	24
CB68	All except M1088/M1089 Auxiliary Oil Coolers Fan Motors	20	24
CB70	Circuit Breaker CB54, Circuit Breaker CB65, Circuit Breaker CB66, Circuit Breaker CB74, Circuit Breaker CB76, Dimmer Module, Instrument and Auxiliary Panel Rocker Switch Lights, Instrument Panel and Auxiliary Panel Gage Lights, Main Light Switch, Master Power Switch, Personnel Heater Lights, Rotating Warning Light Switch, and Headlight HI/LO Switch	20	12
CB71	Hazard Warning Switch, Turn Signal Flasher, and Worklights Switch	15	12
CB72	Blackout Override Switch and Worklights	15	12
CB73	Backup Light	8	12
CB74	Turn Signal Flasher ECU	10	12
CB76	12 VDC Intervehicular Left Turn Signal, Right Turn Signal, and Stoplight, 24 VDC Intervehicular Auxiliary, Front Left Turn Signal, Front Right Turn Signal, Hazard Warning Switch, Left Blackout Stoplight, Left Turn Signal Indicator Light, Rear Left Composite Lamp Turn Signal, Rear Right Composite Lamp Turn Signal, Right Blackout Stoplight, Right Turn Signal Indicator Light, Stoplight Switch (A) and (B), and Tractor Stoplight Switch	15	12

Table 3-2. Troubleshooting (Cont)

MALFUNCTION
TEST OR INSPECTION
CORRECTIVE ACTION

Reference Designator	Function	CB Amps	Circuit Voltage
CB77	Instrument and Auxiliary Panel Gages, Audible Alarm, Emergency Brake Indicator Light, Engine Fan Off Indicator Light, Engine Fan Off Switch, Engine Oil Pressure Indicator Light, Engine Oil Pressure Sensor, Engine Oil Pressure Switch, Front Brake Air Indicator Light, Front Brake Air Indicator Light Switch, Front Brake Air Pressure Transmitter, Magnetic Pickup, Master Stop Indicator Light, Parking Brake Indicator Light, Parking Brake Switch, PTO Indicator Light, PTO Pressure Switch, Rear Brake Air Indicator Light, Rear Brake Air Pressure Transmitter, Transmission Temperature Indicator Light, Troop Transport Alarm Switch, Water Temperature Indicator Light, Water Temperature Sensor, Water Temperature Switch and Fuel Level Sensor	10	12
CB78	Left and Right Headlight	15	12
CB79	WTEC II 10 AMP Fuse TEPSS, Fuel Solenoid, M1089 Remote Engine Kill Switch, Start Inhibit Pushbutton Switch, and WTEC III Transmission ECU	15	24
CB80	12 VDC Intervehicular Taillight, Left Rear Composite Lamp Taillight, and Right Rear Composite Lamp Taillight	25	12

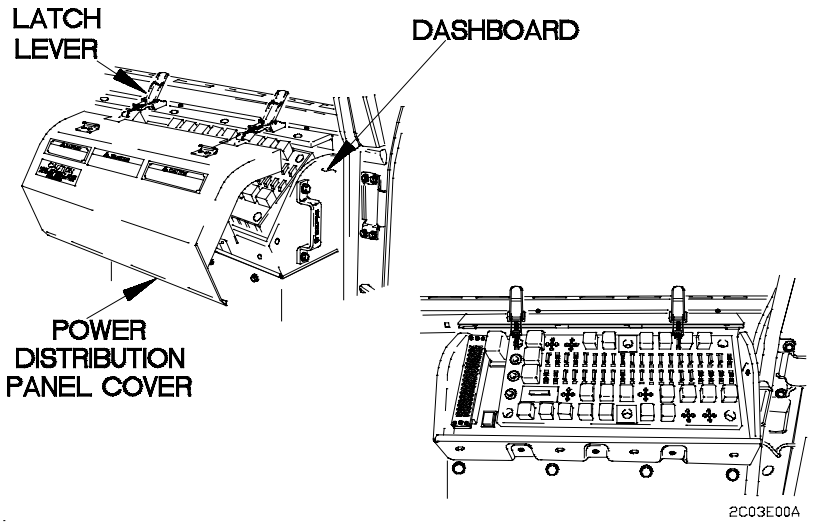

Table 3-2. Troubleshooting (Cont)

MALFUNCTION TEST OR INSPECTION CORRECTIVE ACTION
e. ELECTRICAL SYSTEM (CONT)
e1. ENGINE DOES NOT CRANK.
NOTE Perform a1. ENGINE DOES NOT CRANK, before beginning step (1).
Step 1. Check to see if service lights illuminate.
(a) Position main light switch to SER DRIVE (para 2-27c).
If service lights illuminate, perform step 2 of this fault.
If service lights do not illuminate, perform Electrical System Troubleshooting (e2. 12 VDC AND 24 VDC CIRCUITS DO NOT OPERATE).
(b) Position main light switch to OFF (para 2-27c).
Step 2. Check to see if windshield wipes operate.
(a) Position master power switch to on (para 2-27a or b).
(b) Position windshield wiper switch to "I" (para 2-4).
If windshield wipers operate, perform step 3 of this fault.
If windshield wipers do not operate, perform Electrical System Troubleshooting (e3. 24 VDC CIRCUITS DO NOT OPERATE).
(c) Position windshield wiper switch to "O" (para 2-4).
(d) Position master power switch to off (para 2-27f).
Step 3. Check to see if WTEC II Transmission ECU Pushbutton Shift Selector (TEPSS) or WTEC III Transmission Pushbutton Shift Selector (TPSS) is neutral (N).
(a) Position master power switch to on (para 2-17a or b).
If WTEC II TEPSS or WTEC III TPSS is blank, perform Transmission Troubleshooting (f4. TRANSMISSION PUSHBUTTON SHIFT SELECTOR DOES NOT OPERATE).
(b) If WTEC II TEPSS or WTEC III TPSS displays any other setting than neutral (N), press N or WTEC II TEPSS or WTEC III TPSS.
If WTEC II TEPSS or WTEC III TPSS is in neutral (N), perform step 4 of this fault.
If WTEC II TEPSS or WTEC III TPSS will not go in to neutral (N), beeps or displays "--" perform Transmission System.
(c) Position master power switch to off (para 2-27f).
Step 4. Check circuit breakers (CB21 and CB77) in Power Distribution Panel (PDP) to see if either is tripped.
(a) Remove PDP cover (para 3-17a).
(b) Check circuit breakers (CB21 and CB77) to see if either is tripped.
If either circuit breaker (CB21 and CB77) is tripped, push to reset.

Table 3-2. Troubleshooting (Cont)

MALFUNCTION TEST OR INSPECTION CORRECTIVE ACTION
e1. ENGINE DOES NOT CRANK (CONT).
(c) Attempt to start engine (para 2-27a or b).
(d) If engine still does not crank, check circuit breakers (CB21 and CB77) to see if either is tripped. If either circuit breaker (CB21 and CB77) is tripped or engine does not crank, notify Unit Maintenance.
(e) Install PDP cover (para 3-17b).
(f) Position master power switch to off (para 2-27f).
e2. 12 VDC AND 24 VDC CIRCUITS DO NOT OPERATE
Step 1. Check circuit breaker (CB70) in Power Distribution Panel (PDP) to see if it is tripped.
(a) Position main light switch to SER DRIVE (para 2-27c).
(b) Check circuit breaker (CB70) to see if it is tripped. If circuit breaker (CB70) is tripped, push in to reset.
Step 2. Check to see if service lights illuminate.
(a) Position main light switch to SER DRIVE (para 2-27c). If service lights do not illuminate, Notify Unit Maintenance.
(b) Position main light switch to OFF (para 2-27c).
(c) Install PDP cover (para 3-17b).
e3. 24 VDC CIRCUITS DO NOT OPERATE
NOTE Perform a1. ENGINE DOES NOT CRANK, prior to beginning this task. Notify Unit Maintenance.
e4. DELETED
e5. ENGINE CRANKS BUT DOES NOT START
NOTE Perform Engine System Troubleshooting task a2. Engine Cranks But Does Not Start before performing this task. Notify Unit Maintenance.

Table 3-2. Troubleshooting (Cont)

MALFUNCTION TEST OR INSPECTION CORRECTIVE ACTION
e. ELECTRICAL SYSTEM (CONT)
e6. FUEL GAGE DOES NOT OPERATE OR IS INACCURATE.
Step 1. Fill fuel tank.
If fuel gage shows less than full, notify Unit Maintenance.
Step 2. Check circuit breaker (CB77) in PDP to see if it is tripped.
(a) Remove PDP cover (para 3-17a).
(b) Position master power switch to off (para 2-27f).
(c) If circuit breaker is tripped, push in to reset.
(d) Position master power switch to on (para 2-27a or b).
(e) Check circuit breaker to see if it tripped again. If circuit breaker is tripped again, notify Unit Maintenance.
(f) Position master power switch to off (para 2-27f).
(g) Install PDP cover (para 3-17b).
(h) If fuel gage still does not operate or is inaccurate, notify Unit Maintenance.
e7. WATER TEMPERATURE GAGE DOES NOT OPERATE OR IS INACCURATE.
Check circuit breaker (CB77) in PDP to see if it is tripped.
(a) Remove PDP cover (para 3-17a).
(b) Position master power switch to off (para 2-27f).
(c) If circuit breaker is tripped, push in to reset.
(d) Position master power switch to on (para 2-27a or b).
(e) Check circuit breaker in electrical panel to see if it tripped. If circuit breaker tripped again, notify Unit Maintenance.
(f) Position master power switch to off (para 2-27f).
(g) Install PDP cover (para 3-17b).
(h) If water temperature gage still does not operate or is inaccurate, notify Unit Maintenance.
e8. REAR BRAKE AIR PRESSURE GAGE DOES NOT OPERATE OR IS INACCURATE.
Step 1. Check to see if there is air in air tanks.
(a) Start engine (para 2-27a or b).
(b) Allow vehicle to idle for approximately two minutes.
(c) Shut down engine (para 2-27f).

Table 3-2. Troubleshooting (Cont)

MALFUNCTION TEST OR INSPECTION CORRECTIVE ACTION
e8. REAR BRAKE AIR PRESSURE GAGE DOES NOT OPERATE OR IS INACCURATE (CONT).
WARNING **Wear protective goggles to protect against possible injury from release of high pressure air. Failure to comply may result in injury to personnel.**
(d) Open drain valve on primary air tank. If air pressure is not present, perform Air System Troubleshooting task j1. Air System Loses Pressure During Operation/Slow Air Pressure Buildup.
(e) Close drain valve on primary air tank.
Step 2. Check to see if there is a FRONT BRAKE AIR pressure gage is operating.
(a) Start engine (para 2-27a or b).
(b) Allow truck to idle for approximately two minutes. If FRONT BRAKE AIR pressure gage is operating, notify Unit Maintenance. If FRONT BRAKE AIR pressure gage is not operating, perform Electrical System Troubleshooting (e9. FRONT AIR PRESSURE GAGE DOES NOT OPERATE OR IS INACCURATE).
(c) Shut down engine (para 2-27f).
e9. FRONT BRAKE AIR PRESSURE GAGE DOES NOT OPERATE OR IS INACCURATE.
Step 1. Check to see if there is air in air tanks.
(a) Start engine (para 2-27a or b).
(b) Allow vehicle to idle for approximately two minutes.
(c) Shut down engine (para 2-27f).
WARNING **Wear protective goggles to protect against possible injury from release of high pressure air. Failure to comply may result in injury to personnel.**
(d) Open drain valve on primary air tank. If air pressure is not present, perform Air System Troubleshooting task j1. Air System Loses Pressure During Operating/Slow Air Pressure Buildup.
(e) Close drain valve on primary air tank.

Table 3-2. Troubleshooting (Cont)

MALFUNCTION TEST OR INSPECTION CORRECTIVE ACTION
e. ELECTRICAL SYSTEM (CONT)
e9. FRONT BRAKE AIR PRESSURE GAGE DOES NOT OPERATE OR IS INACCURATE.
Step 2. Check to see if there is FUEL gage is operating.
(a) Position master power switch to on (para 2-27a or b).
If FUEL gage is operating, notify Unit Maintenance.
If FUEL gage is not operating, perform Electrical System Troubleshooting (e6. FUEL GAGE DOES NOT OPERATE OR IS INACCURATE).
(b) Position master power to off (para 2-27f).
e10. OIL PRESSURE GAGE DOES NOT OPERATE OR IS INACCURATE.
Check to see if VOLTS gage is operating.
If VOLTS gage is operating, notify Unit Maintenance.
If VOLTS gage is not operating, perform Electrical System Troubleshooting (e12. VOLTS Gage Does Not Operate or Is Inaccurate).
e11. SPEEDOMETER DOES NOT OPERATE OR IS INACCURATE.
Check to see if WATER TEMP gage is operating.
If WATER TEMP gage is operating, notify Unit Maintenance.
If WATER TEMP gage is not operating, perform Electrical System Troubleshooting e7. WATER TEMP Gage Does Not Operate or Is Inaccurate.
e12. VOLTS GAGE DOES NOT OPERATE OR IS INACCURATE.
Check circuit breaker (CB77) on PDP to see if it is tripped.
(a) Position master power switch to off (para 2-27f).
(b) Remove PDP cover (para 3-17a).
(c) If circuit breaker is tripped, push in to reset.
(d) Install PDP cover (para 3-17b).
(e) Position master power switch to on (para 2-27a or b).
(f) If VOLTS gage still does not operate or is inaccurate, notify Unit Maintenance.
(g) Position master power switch to off (para 2-27f).
e13. TACHOMETER DOES NOT OPERATE OR IS INACCURATE.
Check to see if tachometer illuminates.
(a) Position main light switch main selector level to SER DRIVE (para 2-27c).

Table 3-2. Troubleshooting (Cont)

MALFUNCTION TEST OR INSPECTION CORRECTIVE ACTION
e13. TACHOMETER DOES NOT OPERATE OR IS INACCURATE (CONT).
(b) Position main light switch auxiliary level PNL BRT (para 2-27c).
(c) Observe if tachometer illuminates.
(d) Position main light switch auxiliary level to OFF (para 2-27c).
(e) Position main light switch main selector level to OFF (para 2-27c).
If tachometer does not illuminate, notify Unit Maintenance.
Check to see if VOLTS gage is operating.
If VOLTS gage is operating, notify Unit Maintenance.
If VOLTS gage is not operating, perform Electrical System Troubleshooting e12. VOLTS Gage Does Not Operate or Is Inaccurate.
e14. AUDIBLE ALARM DOES NOT OPERATE.
Check to see if any lights on Lighted Indicator Display (LID) operate.
(a) Position master power switch to on (para 2-27a or b).
(b) If any lights operate on LID, notify Unit Maintenance.
(c) If no lights operate on LID, perform Electrical System Troubleshooting e37. Master STOP Indicator Does Not Operate.
(d) Position master power switch to off (para 2-27f).
e14a. TROOP TRANSPORT AUDIBLE ALARM DOES NOT OPERATE.
Check to see if steady tone audible alarm operates.
(a) Start engine (para 2-27a or b).
(b) Depress brake pedal, fully to the floor, five or six times.
(c) If steady tone audible alarm operates, notify Unit Maintenance.
(d) If steady tone audible alarm does not operate, perform Electrical System Troubleshooting e14. Audible Alarm Does Not Operate.
(e) Shutdown engine (para 2-27f).
e14b. MASTER POWER SWITCH DOES NOT OPERATE.
Check circuit breaker (CB70) on PDP to see if it is tripped.
(a) Position master power switch to off (para 2-27f).
(b) Remove PDP cover (para 3-17a).

Table 3-2. Troubleshooting (Cont)

MALFUNCTION TEST OR INSPECTION CORRECTIVE ACTION
e. ELECTRICAL SYSTEM (CONT)
e14b. MASTER POWER SWITCH DOES NOT OPERATE (CONT).
(c) If circuit breaker is tripped, push in to reset.
(d) Install PDP cover (para 3-17b).
(e) Position master power switch to on (para 2-27a or b).
(f) If master power switch still does not operate, notify Unit Maintenance.
(g) Position master power switch to off (para 2-27f).
e15. LAMP TEST SWITCH DOES NOT ILLUMINATE.
Check to see if radiator fan off switch illuminates.
(a) Position main light switch main selector lever to SER DRIVE (para 2-27c).
(b) Position main light switch auxiliary lever to PNL BRT (para 2-27c) and observe if radiator fan off switch illuminates.
(c) Position main light switch auxiliary lever to OFF (para 2-27c).
(d) Position main light switch main selector to OFF (para 2-27c).
If radiator fan off switch illuminates, notify Unit Maintenance.
If radiator fan off switch does not illuminate, perform Electrical System Troubleshooting e16. Radiator Fan Off Switch Does Not Illuminate.
e16. RADIATOR FAN OFF SWITCH DOES NOT ILLUMINATE.
Check to see if REAR BRAKE AIR gage illuminates.
(a) Position main light switch main selector to SER DRIVE (para 2-27c).
(b) Position main light switch auxiliary lever to PNL BRT (para 2-27c) and observe if REAR BRAKE AIR gage illuminates.
(c) Position main light switch auxiliary lever to OFF (para 2-27c).
(d) Position main light switch main selector to OFF (para 2-27c).
If REAR BRAKE AIR gage illuminates, notify Unit Maintenance.
If REAR BRAKE AIR gage does not illuminate, perform Electrical System Troubleshooting e17. REAR BRAKE AIR Gage Does Not Illuminate.
e16a. ETHER START SWITCH DOES NOT ILLUMINATE.
Check to see if FUEL gage illuminates.
(a) Position main light switch main selector lever to SER DRIVE (para 2-27c).

Table 3-2. Troubleshooting (Cont)

MALFUNCTION TEST OR INSPECTION CORRECTIVE ACTION
e16a. ETHER START SWITCH DOES NOT ILLUMINATE (CONT).
(b) Position main light switch auxiliary lever to PNL BRT (para 2-27c) and observe if FUEL gage illuminates.
(c) Position main light switch auxiliary lever to OFF (para 2-27c).
(d) Position main light switch main selector lever to OFF (para 2-27c).
If FUEL gage illuminates, notify Unit Maintenance.
If FUEL gage does not illuminate, perform Electrical System Troubleshooting e17A. FUEL Gage Does Not Illuminate.
e16b. HAZARD LIGHTS SWITCH DOES NOT ILLUMINATE.
Check to see if amber warning light switch illuminates.
(a) Position main light switch main selector lever to SER DRIVE (para 2-27c).
(b) Position main light switch auxiliary lever to PNL BRT (para 2-27c) and observe if amber warning light switch illuminates.
(c) Position main light switch auxiliary lever to OFF (para 2-27c).
(d) Position main light switch main selector to OFF (para 2-27c).
If amber warning light switch illuminates, notify Unit Maintenance.
If amber warning light switch does not illuminate, perform Electrical System Troubleshooting e16C. Amber Warning Light Switch Does Not Illuminate.
e16c. AMBER WARNING LIGHT SWITCH DOES NOT ILLUMINATE.
Check to see if master power switch illuminates.
(a) Position main light switch main selector lever to SER DRIVE (para 2-27c).
(b) Position main light switch auxiliary lever to PNL BRT (para 2-27c) and observe if master power switch illuminates.
(c) Position main light switch auxiliary lever to OFF (para 2-27c).
(d) Position main light switch main selector lever to OFF (para 2-27c).
If master power switch illuminates, notify Unit Maintenance.
If master power switch does not illuminate, perform Electrical System Troubleshooting e16D. Master Power Switch Does Not Illuminate.
e16d. MASTER POWER SWITCH DOES NOT ILLUMINATE.
Check to see if OIL PRESS gage illuminates.
(a) Position main light switch main selector lever to SER DRIVE (para 2-27c).

Table 3-2. Troubleshooting (Cont)

MALFUNCTION TEST OR INSPECTION CORRECTIVE ACTION
e. ELECTRICAL SYSTEM (CONT)
e16d. MASTER POWER SWITCH DOES NOT ILLUMINATE (CONT).
(b) Position main light switch auxiliary lever to PNL BRT (para 2-27c) and observe if OIL PRESS gage illuminates.
(c) Position main light switch auxiliary lever to OFF (para 2-27c).
(d) Position main light switch main selector lever to OFF (para 2-27c).
If OIL PRESS gage illuminates, notify Unit Maintenance.
If OIL PRESS gage does not illuminate, perform Electrical System Troubleshooting e17F. OIL PRESS Gage Does Not Illuminate.
e17. REAR BRAKE AIR GAGE DOES NOT ILLUMINATE.
Check to see if ether start switch illuminates.
(a) Position main light switch main selector lever to SER DRIVE (para 2-27c).
(b) Position main light switch auxiliary lever to PNL BRT (para 2-27c) and observe if ether start switch illuminates.
(c) Position main light switch auxiliary lever to OFF (para 2-27c).
(d) Position main light switch main selector to OFF (para 2-27c).
If ether start switch illuminates, notify Unit Maintenance.
If ether start switch does not illuminate, perform Electrical System Troubleshooting e16A. Ether Start Switch Does Not Illuminate.
e17a. FUEL GAGE DOES NOT ILLUMINATE.
Check to see if FRONT BRAKE AIR gage illuminates.
(a) Position main light switch main selector lever to SER DRIVE (para 2-27c).
(b) Position main light switch auxiliary lever to PNL BRT (para 2-27c) and observe if FRONT BRAKE AIR gage illuminates.
(c) Position main light switch auxiliary lever to OFF (para 2-27c).
(d) Position main light switch main selector to OFF (para 2-27c).
If FRONT BRAKE AIR gage illuminates, notify Unit Maintenance.
If FRONT BRAKE AIR gage does not illuminate, perform Electrical System Troubleshooting e17B. FRONT BRAKE AIR Gage Does Not Illuminate.

Table 3-2. Troubleshooting (Cont)

MALFUNCTION TEST OR INSPECTION CORRECTIVE ACTION
e17b. FRONT BRAKE AIR GAGE DOES NOT ILLUMINATE. Check to see if speedometer illuminates. (a) Position main light switch main selector lever to SER DRIVE (para 2-27c). (b) Position main light switch auxiliary lever to PNL BRT (para 2-27c) and observe if speedometer illuminates. (c) Position main light switch auxiliary lever to OFF (para 2-27c). (d) Position main light switch selector lever to OFF (para 2-27c). If speedometer illuminates, notify Unit Maintenance. If speedometer does not illuminate, perform Electrical System Troubleshooting e17C. Speedometer Does Not Illuminate.
e17c. SPEEDOMETER DOES NOT ILLUMINATE. Check to see if VOLTS gage illuminates. (a) Position main light switch main selector lever to SER DRIVE (para 2-27c). (b) Position main light switch auxiliary lever to PNL BRT (para 2-27c) and observe if VOLTS gage illuminates. (c) Position main light switch auxiliary lever to OFF (para 2-27c). (d) Position main light switch selector lever to OFF (para 2-27c). If VOLTS gage illuminates, notify Unit Maintenance. If VOLTS gage does not illuminate, perform Electrical System Troubleshooting e17D. VOLTS Gage Does Not Illuminate.
e17d. VOLTS GAGE DOES NOT ILLUMINATE. Check to see if WATER TEMP gage illuminates. (a) Position main light switch main selector lever to SER DRIVE (para 2-27c). (b) Position main light switch auxiliary lever to PNL BRT (para 2-27c) and observe if WATER TEMP gage illuminates. (c) Position main light switch auxiliary lever to OFF (para 2-27c). (d) Position main light switch main selector lever to OFF (para 2-27c). If WATER TEMP gage illuminates, notify Unit Maintenance. If WATER TEMP gage does not illuminate, perform Electrical System Troubleshooting e17E. WATER TEMP Gage Does Not Illuminate.

Table 3-2. Troubleshooting (Cont)

MALFUNCTION TEST OR INSPECTION CORRECTIVE ACTION
e. ELECTRICAL SYSTEM (CONT)
e17e. WATER TEMP GAGE DOES NOT ILLUMINATE.
Check to see if OIL PRESS gage illuminates. (a) Position main light switch main selector to SER DRIVE (para 2-27c). (b) Position main light switch auxiliary lever to PNL BRT (para 2-27c) and observe if OIL PRESS gage illuminates. (c) Position main light switch auxiliary lever to OFF (para 2-27c). (d) Position main light switch main selector lever to OFF (para 2-27c). If OIL PRESS gage illuminates, notify Unit Maintenance. If OIL PRESS gage does not illuminate, check circuit breaker (CB70) on PDP to see if it is tripped. (a) Remove PDP cover (para 3-17a). (b) If circuit breaker is tripped, push in to reset. (c) Install PDP cover (para 3-17b). (d) Position main light switch selector lever to SER DRIVE (para 2-27c). (e) Position main light switch auxiliary lever to PNL BRT (para 2-27c) and observe if WATER TEMP gage illuminates. (f) If WATER TEMP gage does not illuminate, notify Unit Maintenance. (g) Position main light switch auxiliary lever to OFF (para 2-27c). (h) Position main light switch main selector lever to OFF (para 2-27c).
e17f. OIL PRESS GAGE DOES NOT ILLUMINATE.
Check to see if WATER TEMP gage illuminates. (a) Position main light switch main selector lever to SER DRIVE (para 2-27c). (b) Position main light switch auxiliary lever to PNL BRT (para 2-27c) and observe if WATER TEMP gage illuminates, notify Unit Maintenance. (c) Position main light switch auxiliary lever to OFF (para 2-27c). (d) Position main light switch main selector lever to OFF (para 2-27c). If WATER TEMP gage illuminates, notify Unit Maintenance. If WATER TEMP gage does not illuminate, check circuit breaker (CB70) on PDP to see if it is tripped. (a) Remove PDP cover (para 3-17a). (b) If circuit breaker is tripped, push in to reset.

Table 3-2. Troubleshooting (Cont)

MALFUNCTION TEST OR INSPECTION CORRECTIVE ACTION
e17f. OIL PRESS GAGE DOES NOT ILLUMINATE (CONT).
(c) Install PDP cover (para 3-17b).
(d) Position main light switch selector lever to SER DRIVE (para 2-27c).
(e) Position main light switch auxiliary lever to PNL BRT (para 2-27c) and observe if OIL PRESS gage illuminates.
(f) If OIL PRESS gage does not illuminate, notify Unit Maintenance.
(g) Position main light switch auxiliary lever to OFF (para 2-27c).
(h) Position main light switch main selector lever to OFF (para 2-27c).
e18. AUXILIARY PANEL, PERSONNEL HEATER, AND INSTRUMENT PANEL DO NOT ILLUMINATE.
Check circuit breaker (CB23) in PDP to see if it is tripped.
(a) Remove PDP cover (para 3-17a).
(b) Position main light switch to OFF (para 2-27c).
(c) If circuit breaker is tripped, push in to reset.
(d) Position main light switch to SER DRIVE (para 2-27c).
(e) Check circuit breaker to see if it tripped. If circuit breaker is tripped, notify Unit Maintenance.
(f) Position main light switch to OFF (para 2-27c).
(g) Install PDP cover (para 3-17b).
(h) If auxiliary panel, personnel heater, and instrument panel still do not illuminate, notify Unit Maintenance.
e19. TACHOMETER DOES NOT ILLUMINATE.
Check to see if hazard lights switch illuminates.
(a) Position main light switch main selector lever to SER DRIVE (para 2-27c).
(b) Position main light switch auxiliary lever to PNL BRT (para 2-27c) and observe if hazard lights switch illuminates.
(c) Position main light switch auxiliary lever to OFF (para 2-27c).
(d) Position main light switch main selector lever to OFF (para 2-27c).

Table 3-2. Troubleshooting (Cont)

MALFUNCTION TEST OR INSPECTION CORRECTIVE ACTION
e. ELECTRICAL SYSTEM (CONT)
e19. TACHOMETER DOES NOT ILLUMINATE. (CONT)
If hazard lights switch illuminates, notify Unit Maintenance.
If hazard lights switch does not illuminate, perform Electrical System Troubleshooting (e16b. Hazard Lights Switch Does Not Illuminate).
e20. AUXILIARY PANEL SWITCH DOES NOT ILLUMINATE.
Check circuit breaker (CB23) in PDP to see if it is tripped.
(a) Remove PDP cover (para 3-17a).
(b) Position main light switch to OFF (para 2-27c).
(c) If circuit breaker is tripped, push in to reset.
(d) Position main light switch to SER DRIVE (para 2-27c).
(e) Check circuit breaker to see if it tripped. If circuit breaker is tripped, notify Unit Maintenance.
(f) Position main light switch to OFF (para 2-27c).
(g) Install PDP cover (para 3-17b).
(h) If auxiliary panel switch still does not illuminate, notify Unit Maintenance.
e21. AUXILIARY PANEL DOES NOT ILLUMINATE.
Check circuit breaker (CB23) in PDP to see if it is tripped.
(a) Remove PDP cover (para 3-17a).
(b) Position main light switch to OFF (para 2-27c).
(c) If circuit breaker is tripped, push in to reset.
(d) Position main light switch to SER DRIVE (para 2-27c).
(e) Check circuit breaker to see if it tripped. If circuit breaker is tripped, notify Unit Maintenance.
(f) Position main light switch to OFF (para 2-27c).
(g) Install PDP cover (para 3-17b).
(h) If auxiliary panel still does not illuminate, notify Unit Maintenance.
e22. HIGH ENGINE TEMPERATURE INDICATOR DOES NOT OPERATE.
Check circuit breaker (CB77) in PDP to see if it is tripped.
(a) Remove PDP cover (para 3-17a).
(b) Position main light switch to OFF (para 2-27c).

Table 3-2. Troubleshooting (Cont)

MALFUNCTION TEST OR INSPECTION CORRECTIVE ACTION
e22. HIGH ENGINE TEMPERATURE INDICATOR DOES NOT OPERATE (CONT).
(c) If circuit breaker is tripped, push in to reset.
(d) Position main light switch to SER DRIVE (para 2-27c).
(e) Check circuit breaker to see if it tripped. If circuit breaker is tripped, notify Unit Maintenance.
(f) Position main light switch to OFF (para 2-27c).
(g) Install PDP cover (para 3-17b).
(h) If high engine temperature indicator still does not operate, notify Unit Maintenance.
e23. CENTRAL TIRE INFLATION SYSTEM (CTIS) OVERSPEED INDICATOR DOES NOT OPERATE.
Check circuit breaker (CB40) in PDP to see if it is tripped.
(a) Remove PDP cover (para 3-17a).
(b) Position main light switch to OFF (para 2-27c).
(c) If circuit breaker is tripped, push in to reset.
(d) Position main light switch to SER DRIVE (para 2-27c).
(e) Check circuit breaker to see if it tripped. If circuit breaker is tripped, notify Unit Maintenance.
(f) Position main light switch to OFF (para 2-27c).
(g) Install PDP cover (para 3-17b).
(h) If CTIS overspeed indicator still does not operate, notify Unit Maintenance.
e24. CHEMICAL DETECTOR INDICATOR DOES NOT OPERATE.
Check circuit breaker (CB30) in PDP to see if it is tripped.
(a) Remove PDP cover (para 3-17a).
(b) Position main light switch to OFF (para 2-27c).
(c) If circuit breaker is tripped, push in to reset.
(d) Position main light switch to SER DRIVE (para 2-27c).
(e) Check circuit breaker to see if it tripped. If circuit breaker is tripped, notify Unit Maintenance.
(f) Position main light switch to OFF (para 2-27c).
(g) Install PDP cover (para 3-17b).
(h) If chemical detector indicator still does not operate, notify Unit Maintenance.

Table 3-2. Troubleshooting (Cont)

MALFUNCTION TEST OR INSPECTION CORRECTIVE ACTION
e. ELECTRICAL SYSTEM (CONT)
e25. LEFT TURN SIGNAL INDICATOR DOES NOT ILLUMINATE.
Step 1. Check operation of turn signals (para 2-18, item 21). If turn signals do not illuminate, go to step 2. If turn signals are OK, notify Unit Maintenance.
Step 2. Check for illumination of high beams on indicator (para 2-27c). If high beam indicator does not illuminate, perform Electrical System Troubleshooting (e27 Turn Signal Indicator and High Beam Indicator Do Not Illuminate).
Step 3. Check circuit breaker (CB74) in PDP to see if it is tripped. (a) Remove PDP cover (para 3-17a). (b) Position main light switch to OFF (para 2-27c). (c) If circuit breaker is tripped, push in to reset. (d) Position main light switch to SER DRIVE (para 2-27c). (e) Check circuit breaker to see if it tripped. If circuit breaker is tripped, notify Unit Maintenance. (f) Position main light switch to OFF (para 2-27c). (g) Install PDP cover (para 3-17b). (h) If left turn signal indicator still does not illuminate, notify Unit Maintenance.
e26. RIGHT TURN SIGNAL INDICATOR DOES NOT ILLUMINATE.
Step 1. Check operation of turn signals (para 2-18, item 21). If turn signals do not illuminate, go to step 2. If turn signals are OK, notify Unit Maintenance.
Step 2. Check circuit breaker (CB74) in PDP to see if it is tripped. (a) Remove PDP cover (para 3-17a). (b) Position main light switch to OFF (para 2-27c). (c) If circuit breaker is tripped, push in to reset. (d) Position main light switch to SER DRIVE (para 2-27c). (e) Check circuit breaker to see if it tripped. If circuit breaker is tripped, notify Unit Maintenance. (f) Position main light switch to OFF (para 2-27c).

Table 3-2. Troubleshooting (Cont)

MALFUNCTION TEST OR INSPECTION CORRECTIVE ACTION
e26. RIGHT TURN SIGNAL INDICATOR DOES NOT ILLUMINATE (CONT).
(g) Install PDP cover (para 3-17b).
(h) If right turn signal indicator still does not illuminate, notify Unit Maintenance.
e27. TURN SIGNAL INDICATORS AND HIGH BEAMS ON INDICATOR DO NOT ILLUMINATE.
Step 1. Check operation of turn signals and high beams (para 2-18, item 21 and 40).
If turn signals and headlights are OK, notify Unit Maintenance.
e28. HIGH BEAMS ON INDICATOR DOES NOT ILLUMINATE.
Step 1. Check operation of high beams (para 2-18, item 40).
If high beams do not illuminate, perform Eletrical System Troubleshooting (e39. One Or Both Headlights High Beams Do Not Illuminate). If high beams illuminate, notify Unit Maintenance.
e29. PARKING BRAKE INDICATOR AND/OR EMERGENCY BRAKE INDICATOR DOES NOT ILLUMINATE.
Step 1. Check operation of parking brakes (para 2-18, item 28).
If parking brakes do not operate, perform Brake System Troubleshooting (i8. Parking Brakes Do Not Apply).
Step 2. Check circuit breaker (CB77) in PDP to see if it is tripped.
(a) Remove PDP cover (para 3-17a).
(b) Position main light switch to OFF (para 2-27c).
(c) If circuit breaker is tripped, push in to reset.
(d) Position main light switch to SER DRIVE (para 2-27c).
(e) Check circuit breaker to see if it tripped. If circuit breaker is tripped, notify Unit Maintenance.
(f) Position main light switch to OFF (para 2-27c).
(g) Install PDP cover (para 3-17b).
(h) If parking brake indicator and/or emergency brake indicator still does not illuminate, notify Unit Maintenance.
e30. POWER TAKE-OFF (PTO) INDICATOR DOES NOT OPERATE.
Step 1. Check operation of PTO (para 2-65).
If PTO indicator does not work, go to step 2. If PTO is OK, notify Unit Maintenance.
Step 2. Check circuit breaker (CB49) in PDP to see if it is tripped.

Table 3-2. Troubleshooting (Cont)

MALFUNCTION TEST OR INSPECTION CORRECTIVE ACTION
e. ELECTRICAL SYSTEM (CONT)
e30. POWER TAKE-OFF (PTO) INDICATOR DOES NOT OPERATE (CONT).
(a) Remove PDP cover (para 3-17a).
(b) Shut down engine (para 2-27f).
(c) If circuit breaker is tripped, push in to reset.
(d) Engage PTO (para 2-65).
(e) Check circuit breaker to see if it tripped. If circuit breaker is tripped, notify Unit Maintenance.
(f) Disengage PTO (para 2-65).
(g) Install PDP cover (para 3-17b).
(h) If PTO indicator still does not operate, notify Unit Maintenance.
e31. FAN OFF INDICATOR DOES NOT OPERATE.
Check circuit breaker (CB22) in PDP to see if it is tripped.
(a) Remove PDP cover (para 3-17a).
(b) Shut down engine (para 2-27f).
(c) If circuit breaker is tripped, push in to reset.
(d) Start engine (para 2-27a or b).
(e) Check circuit breaker to see if it tripped. If circuit breaker is tripped, notify Unit Maintenance.
(f) Shut down engine (para 2-27f).
(g) Install PDP cover (para 3-17b).
(h) If fan off indicator still does not operate, notify Unit Maintenance.
e32. DUMP BODY UP INDICATOR DOES NOT OPERATE.
Check circuit breaker (CB50) in PDP to see if it is tripped.
(a) Remove PDP cover (para 3-17a).
(b) Lower dump body (para 2-38h).
(c) Shut down engine (para 2-27f).
(d) If circuit breaker is tripped, push in to reset.
(e) Start engine (para 2-27a or b).
(f) Raise dump body (para 2-38g).

Table 3-2. Troubleshooting (Cont)

MALFUNCTION TEST OR INSPECTION CORRECTIVE ACTION
e32. DUMP BODY UP INDICATOR DOES NOT OPERATE (CONT).
(g) Check circuit breaker to see if it tripped. If circuit breaker is tripped, notify Unit Maintenance.
(h) Lower dump body (para 2-38h).
(i) Shut down engine (para 2-27f).
(j) Install PDP cover (para 3-17b).
(k) If DUMP BODY UP indicator still does not operate, notify Unit Maintenance.
e33. TRANSMISSION TEMPERATURE INDICATOR DOES NOT OPERATE.
Check circuit breaker (CB77) in PDP to see if it is tripped.
(a) Remove PDP cover (para 3-17a).
(b) Shut down engine (para 2-27f).
(c) If circuit breaker is tripped, push in to reset.
(d) Start engine (para 2-27a or b) and road test vehicle.
(e) Check circuit breaker to see if it tripped. If circuit breaker is tripped, notify Unit Maintenance.
(f) Shut down engine (para 2-27f).
(g) Install PDP cover (para 3-17b).
(h) If transmission temperature indicator still does not operate, notify Unit Maintenance.
e34. FRONT BRAKE AIR INDICATOR DOES NOT ILLUMINATE WHEN AIR PRESSURE IS BELOW 65 PSI.
Step 1. Check to see if other indicator lights illuminate.
(a) Position master power switch to on (para 2-27a or b).
If other indicator lights illuminate then go to step 2 of this fault.
If other indicator lights do not illuminate, notify Unit Maintenance.
(b) Position master power switch to off (para 2-27f).
Step 2. Check operation of FRONT AIR BRAKE pressure gage.
(a) Position master power switch to on (para 2-27a or b).

Table 3-2. Troubleshooting (Cont)

MALFUNCTION TEST OR INSPECTION CORRECTIVE ACTION
e. ELECTRICAL SYSTEM (CONT)
e34. FRONT BRAKE AIR INDICATOR DOES NOT ILLUMINATE WHEN AIR PRESSURE IS BELOW 65 PSI (CONT).
(b) Start engine (para 2-27a or b) and allow vehicle to build air pressure. If FRONT BRAKE AIR pressure gage operates, notify Unit Maintenance. If FRONT BRAKE AIR pressure gage does not operate, perform Electrical System Troubleshooting (e9. FRONT BRAKE AIR PRESSURE GAGE DOES NOT OPERATE OR IN INACCURATE).
(c) Shut down engine (para 2-27f).
e35. REAR BRAKE AIR INDICATOR DOES NOT ILLUMINATE WHEN AIR PRESSURE IS BELOW 65 PSI.
Step 1. Check to see if other indicator lights illuminate.
(a) Remove master switch to on (para 2-27a or b). If other indicator lights illuminate, then go to step 2 of this fault. If other indicator lights do not illuminate, notify Unit Maintenance.
(b) Position master power switch to off (para 2-27f).
Step 2. Check operation of REAR AIR BRAKE pressure gage.
(a) Position master power switch to on (para 2-27a or b).
(b) Start engine (para 2-27a or b) and allow vehicle to build air pressure. If REAR BRAKE AIR pressure gage operates, notify Unit Maintenance. If REAR BRAKE AIR pressure gage does not operate, perform Electrical System Troubleshooting (e8. REAR BRAKE AIR PRESSURE GAGE DOES NOT OPERATE OR IS INACCURATE).
(c) Shut down engine (para 2-27f).
e36. ENGINE OIL PRESSURE INDICATOR DOES NOT OPERATE.
Check circuit breaker (CB77) in PDP to see if it is tripped.
(a) Remove PDP cover (para 3-17a).
(b) Shut down engine (para 2-27f).
(c) If circuit breaker is tripped, push in to reset.
(d) Start engine (para 2-27a or b).
(e) Check circuit breaker to see if it tripped. If circuit breaker is tripped, notify Unit Maintenance.

Table 3-2. Troubleshooting (Cont)

MALFUNCTION TEST OR INSPECTION CORRECTIVE ACTION
e36. ENGINE OIL PRESSURE INDICATOR DOES NOT OPERATE (CONT).
(f) Shut down engine (para 2-27f).
(g) Install PDP cover (para 3-17b).
(h) If engine oil pressure indicator still does not operate, notify Unit Maintenance.
e37. MASTER STOP INDICATOR DOES NOT OPERATE.
Check circuit breaker (CB77) in PDP to see if it is tripped.
(a) Remove PDP cover (para 3-17a).
(b) Shut down engine (para 2-27f).
(c) If circuit breaker is tripped, push in to reset.
(d) Start engine (para 2-27a or b).
(e) Check circuit breaker to see if it tripped. If circuit breaker is tripped, notify Unit Maintenance.
(f) Shut down engine (para 2-27f).
(g) Install PDP cover (para 3-17b).
(h) If master stop indicator still does not operate, notify Unit Maintenance.
e38. ONE OR BOTH HEADLIGHTS (HIGH AND LOW BEAMS) DO NOT ILLUMINATE.
Step 1. Check operation of all vehicle lights (para 2-27c).
If either light is not working, notify Unit Maintenance.
Step 2. Check circuit breakers (CB78) in PDP to see if they are tripped.
(a) Remove PDP cover (para 3-17a).
(b) Position main light switch to OFF (para 2-27c).
(c) If circuit breakers are tripped, push in to reset.
(d) Position main light switch to SER DRIVE (para 2-27c).
(e) Check circuit breakers to see if they tripped. If circuit breaker is tripped, notify Unit Maintenance.
(f) Position main light switch to OFF (para 2-27c).
(g) Install PDP cover (para 3-17b).
(h) If one or both headlight low beams still do not illuminate, notify Unit Maintenance.

Table 3-2. Troubleshooting (Cont)

MALFUNCTION TEST OR INSPECTION CORRECTIVE ACTION
e. ELECTRICAL SYSTEM (CONT)
e39. ONE OR BOTH HEADLIGHT LOW BEAMS DO NOT ILLUMINATE.
Check operation of all vehicle lights (para 2-27c).
If either light is not working, notify Unit Maintenance.
e40. ONE OR BOTH HEADLIGHT HIGH BEAMS DO NOT ILLUMINATE.
Check operation of all vehicle lights (para 2-27c).
If either light is not working, notify Unit Maintenance.
e41. PARKING LIGHTS DO NOT ILLUMINATE.
Step 1. Check operation of all vehicle lights (para 2-27c).
If either light is not working, notify Unit Maintenance.
Step 2. Check circuit breaker (CB65) in PDP to see if it is tripped.
(a) Remove PDP cover (para 3-17a).
(b) Position main light switch to OFF (para 2-27c).
(c) If circuit breaker is tripped, push in to reset.
(d) Position main light switch to SER DRIVE (para 2-27c).
(e) Check circuit breaker to see if it tripped. If circuit breaker is tripped, notify Unit Maintenance.
(f) Position main light switch to OFF (para 2-27c).
(g) Install PDP cover (para 3-17b).
(h) If parking lights still do not illuminate, notify Unit Maintenance.
e42. LH DOOR AND/OR LH FRONT MARKER LIGHTS DO NOT ILLUMINATE.
Check operation of all marker lights (para 2-27c).
If all marker lights do not illuminate, perform Electrical System Troubleshooting (e45A. All Marker Lights Do Not Illuminate in Normal Mode). If LH door and/or LH front marker lights do not illuminate, notify Unit Maintenance.
e43. RH DOOR AND/OR RH FRONT MARKER LIGHTS DO NOT ILLUMINATE.
Check operation of all marker lights (para 2-27c).
If all marker lights do not illuminate, perform Electrical System Troubleshooting (e45A. All Marker Lights Do Not Illuminate in Normal Mode). If RH door and/or RH front marker lights do not illuminate, notify Unit Maintenance.

Table 3-2. Troubleshooting (Cont)

MALFUNCTION TEST OR INSPECTION CORRECTIVE ACTION
e44. ONE OR MORE CAB MARKER LIGHTS DO NOT ILLUMINATE. Check operation of all marker lights (para 2-27c). If all marker lights do not illuminate, perform Electrical System Troubleshooting (e45A. All Marker Lights Do Not Illuminate in Normal Mode). If one or more cab top marker lights do not illuminate, notify Unit Maintenance.
e45. SIDE AND/OR REAR MARKER LIGHTS DO NOT ILLUMINATE. Check operation of all marker lights (para 2-27c). If all marker lights do not illuminate, perform Electrical System Troubleshooting (e45A. All Marker Lights Do Not Illuminate in Normal Mode). If side and/or rear marker lights do not illuminate, notify Unit Maintenance.
e45a. ALL MARKER LIGHTS DO NOT OPERATE IN NORMAL MODE. Check circuit breaker (CB67) in Power Distribution Panel (PDP) to see if it is tripped. (a) Remove PDP cover (para 3-17a). (b) Check circuit breaker (CB67) to see if it is tripped. If circuit breaker (CB67) is tripped, push in to reset. (c) Position main light switch to SER DRIVE (para 2-27c). (d) If all marker lights still do not illuminate, check circuit breaker (CB67) to see if it is tripped. If circuit breaker is tripped, notify Unit Maintenance. (e) Install PDP cover (para 3-17b). (f) Position main light switch to OFF (para 2-27c). (g) If all marker lights do not illuminate, notify Unit Maintenance.
e46. ONE OR BOTH COMPOSITE TAILLIGHTS DO NOT ILLUMINATE. Step 1. Check operation of all vehicle lights (para 2-27c). If either light is not working, notify Unit Maintenance. Step 2. Check circuit breakers (CB43, CB44, and CB67) in PDP to see if they are tripped. (a) Remove PDP cover (para 3-17a). (b) Position main light switch to OFF (para 2-27c). (c) If circuit breakers are tripped, push in to reset. (d) Position main light switch to SER DRIVE (para 2-27c). (e) Check circuit breakers to see if they tripped. If circuit breaker is tripped, notify Unit Maintenance.

Table 3-2. Troubleshooting (Cont)

MALFUNCTION TEST OR INSPECTION CORRECTIVE ACTION
e. ELECTRICAL SYSTEM (CONT)
e46. ONE OR BOTH COMPOSITE TAILLIGHTS DO NOT ILLUMINATE (CONT).
(f) Position main light switch to OFF (para 2-27c).
(g) Install PDP cover (para 3-17b).
(h) If one or both composite taillights still do not illuminate, notify Unit Maintenance.
e47. ONE OR BOTH FRONT BLACKOUT MARKER LIGHTS DO NOT ILLUMINATE.
Step 1. Check operation of all vehicle lights (para 2-27c). If either light is not working, notify Unit Maintenance.
Step 2. Check circuit breaker (CB66) in PDP to see if it is tripped.
(a) Remove PDP cover (para 3-17a).
(b) Position main light switch to OFF (para 2-27c).
(c) If circuit breaker is tripped, push in to reset.
(d) Position main light switch to SER DRIVE (para 2-27c).
(e) Check circuit breaker to see if it tripped. If circuit breaker is tripped, notify Unit Maintenance.
(f) Position main light switch to OFF (para 2-27c).
(g) Install PDP cover (para 3-17b).
(h) If one or both front blackout marker lights still do not illuminate, notify Unit Maintenance.
e48. BLACKOUT DRIVE LIGHT DOES NOT ILLUMINATE.
Step 1. Check operation of all vehicle lights (para 2-27c). If either light is not working, notify Unit Maintenance.
Step 2. Check circuit breakers (CB54 and CB66) in PDP to see if they are tripped.
(a) Remove PDP cover (para 3-17a).
(b) Position main light switch to OFF (para 2-27c).

Table 3-2. Troubleshooting (Cont)

MALFUNCTION TEST OR INSPECTION CORRECTIVE ACTION
e48. BLACKOUT DRIVE LIGHT DOES NOT ILLUMINATE (CONT).
(c) If circuit breakers are tripped, push in to reset.
(d) Position main light switch to SER DRIVE (para 2-27c).
(e) Check circuit breakers to see if they tripped. If circuit breaker is tripped, notify Unit Maintenance.
(f) Position main light switch to OFF (para 2-27c).
(g) Install PDP cover (para 3-17b).
(h) If blackout drive light still does not illuminate, notify Unit Maintenance.
e49. ONE OR BOTH REAR BLACKOUT MARKER LIGHTS DO NOT ILLUMINATE.
Step 1. Check operation of all vehicle lights (para 2-27c). If either light is not working, notify Unit Maintenance.
Step 2. Check circuit breaker (CB66) in PDP to see if it is tripped.
(a) Remove PDP cover (para 3-17a).
(b) Position main light switch to OFF (para 2-27c).
(c) If circuit breaker is tripped, push in to reset.
(d) Position main light switch to SER DRIVE (para 2-27c).
(e) Check circuit breaker to see if it tripped. If circuit breaker is tripped, notify Unit Maintenance.
(f) Position main light switch to OFF (para 2-27c).
(g) Install PDP cover (para 3-17b).
(h) If one or more rear blackout marker lights still do not illuminate, notify Unit Maintenance.
e50. AMBER WARNING LIGHT DOES NOT ILLUMINATE (ALL MODELS EXCEPT M1089).
Step 1. Check operation of all vehicle lights (para 2-27c). If either light is not working, notify Unit Maintenance.
Step 2. Check circuit breaker (CB38) in PDP to see if it is tripped.
(a) Remove PDP cover (para 3-17a).
(b) Position main light switch to OFF (para 2-27c).
(c) If circuit breaker is tripped, push in to reset.

Table 3-2. Troubleshooting (Cont)

MALFUNCTION TEST OR INSPECTION CORRECTIVE ACTION
e. ELECTRICAL SYSTEM (CONT)
e50. AMBER WARNING LIGHT DOES NOT ILLUMINATE (ALL MODELS EXCEPT M1089) (CONT).
(d) Position main light switch to SER DRIVE (para 2-27c).
(e) Check circuit breaker to see if it tripped. If circuit breaker is tripped, notify Unit Maintenance.
(f) Position main light switch to OFF (para 2-27c).
(g) Install PDP cover (para 3-17b).
(h) If amber warning light still does not illuminate, notify Unit Maintenance.
e51. M1089 AMBER WARNING LIGHT DOES NOT ILLUMINATE.
Step 1. Check operation of all vehicle lights (para 2-27c). If either light is not working, notify Unit Maintenance.
Step 2. Check circuit breaker (CB38) in PDP to see if it is tripped.
(a) Remove PDP cover (para 3-17a).
(b) Position main light switch to OFF (para 2-27c).
(c) If circuit breaker is tripped, push in to reset.
(d) Position main light switch to SER DRIVE (para 2-27c).
(e) Check circuit breaker to see if it tripped. If circuit breaker is tripped, notify Unit Maintenance.
(f) Position main light switch to OFF (para 2-27c).
(g) Install PDP cover (para 3-17b).
(h) If amber warning light still does not illuminate, notify Unit Maintenance.
e52. BACKUP LIGHT DOES NOT ILLUMINATE.
Step 1. Check operation of all vehicle lights (para 2-27c). If either light is not working, notify Unit Maintenance.
Step 2. Check circuit breakers (CB70 and CB73) in PDP to see if it is tripped.
(a) Remove PDP cover (para 3-17a).
(b) Position main light switch to OFF (para 2-27c).
(c) If circuit breaker(s) is tripped, push in to reset.

Table 3-2. Troubleshooting (Cont)

MALFUNCTION TEST OR INSPECTION CORRECTIVE ACTION
e52. BACKUP LIGHT DOES NOT ILLUMINATE (CONT).
(d) Position main light switch to SER DRIVE (para 2-27c).
(e) Check circuit breakers to see if they tripped. If circuit breakers are tripped, notify Unit Maintenance.
(f) Position main light switch to OFF (para 2-27c).
(g) Install PDP cover (para 3-17b).
(h) If backup light still does not illuminate, notify Unit Maintenance.
e53. BLACKOUT MARKER LIGHTS DO NOT ILLUMINATE.
Step 1. Check operation of all vehicle lights (para 2-27c).
If either light is not working, notify Unit Maintenance.
Step 2. Check circuit breaker (CB66) in PDP to see if it is tripped.
(a) Remove PDP cover (para 3-17a).
(b) Position main light switch to OFF (para 2-27c).
(c) If circuit breaker is tripped, push in to reset.
(d) Position main light switch to SER DRIVE (para 2-27c).
(e) Check circuit breaker to see if it tripped. If circuit breaker is tripped, notify Unit Maintenance.
(f) Position main light switch to OFF (para 2-27c).
(g) Install PDP cover (para 3-17b).
(h) If blackout marker lights still do not illuminate, notify Unit Maintenance.
e53a. FRONT HAZARD LIGHTS DO NOT ILLUMINATE.
Step 1. Check operation of front and rear turn signals (para 2-27c).
If front and rear turn signals do not illuminate, perform Electrical System Troubleshooting (e56. Front and Rear Turn Signals Do Not Illuminate).
Step 2. Check operation of rear hazard lights (para 2-27c).
(a) If rear hazard lights do not illuminate, perform Electrical System Troubleshooting (e55. Front And Rear Hazard Lights Do Not Illuminate).
(b) If front hazard lights do not illuminate, notify Unit Maintenance.

Table 3-2. Troubleshooting (Cont)

MALFUNCTION TEST OR INSPECTION CORRECTIVE ACTION
e. ELECTRICAL SYSTEM (CONT)
e54. REAR HAZARD LIGHTS DO NOT ILLUMINATE.
Step 1. Check operation of all vehicle lights (para 2-27c). If either light does not illuminate, notify Unit Maintenance.
Step 2. Check circuit breaker (CB71) in PDP to see if it is tripped. (a) Remove PDP cover (para 3-17a). (b) Position main light switch to OFF (para 2-27c). (c) If circuit breaker is tripped, push in to reset. (d) Position main light switch to SER DRIVE (para 2-27c). (e) Check circuit breaker to see if it tripped. If circuit breaker is tripped, notify Unit Maintenance. (f) Position main light switch to OFF (para 2-27c). (g) Install PDP cover (para 3-17b). (h) If rear hazard lights still do not illuminate, notify Unit Maintenance.
e55. FRONT AND REAR HAZARD LIGHTS DO NOT ILLUMINATE.
Step 1. Check operation of front and rear turn signals (para 2-27c). (a) If front and rear turn signals do not illuminate, perform Electrical System Troubleshooting (e56. Front and Rear Turn Signals Do Not Illuminate). (b) If left or right front turn signal does not illuminate, perform Electrical System Troubleshooting (e57. Left or Right Front Turn Signal Does Not Illuminate). (c) If turn signals illuminate, go to Step 2 of this fault.
Step 2. Check circuit breaker (CB71) in PDP to see if it is tripped. (a) Position main light switch to OFF (para 2-27c). (b) Remove PDP cover (para 3-17a). (c) Check circuit breaker (CB71) to see if it is tripped. (d) If circuit breaker (CB71) is tripped, push in to reset. (e) Install PDP cover (para 3-17b). (f) Position main light switch to SER DRIVE (para 2-27c). (g) Position hazard lights switch to on (para 2-27c). (h) If front and rear hazard lights still do not illuminate, notify Unit Maintenance.

Table 3-2. Troubleshooting (Cont)

MALFUNCTION TEST OR INSPECTION CORRECTIVE ACTION
e55. FRONT AND REAR HAZARD LIGHTS DO NOT ILLUMINATE (CONT).
(i) Position hazard lights switch to off (para 2-27c).
(j) Position main light switch to OFF (para 2-27c).
e56. FRONT AND REAR TURN SIGNALS DO NOT ILLUMINATE.
Step 1. Check operation of all vehicle lights (para 2-27c).
If either light does not illuminate, notify Unit Maintenance.
Step 2. Check circuit breaker (CB74) in PDP to see if it is tripped.
(a) Remove PDP cover (para 3-17a).
(b) Position main light switch to OFF (para 2-27c).
(c) If circuit breaker is tripped, push in to reset.
(d) Position main light switch to SER DRIVE (para 2-27c).
(e) Check circuit breaker to see if it tripped. If circuit breaker is tripped, notify Unit Maintenance.
(f) Position main light switch to OFF (para 2-27c).
(g) Install PDP cover (para 3-17b).
(h) If front and rear turn signals still do not illuminate, notify Unit Maintenance.
e57. LEFT OR RIGHT FRONT TURN SIGNAL DOES NOT ILLUMINATE.
Step 1. Check operation of all vehicle lights (para 2-27c).
If either light does not illuminate, notify Unit Maintenance.
Step 2. Check circuit breaker (CB74) in PDP to see if it is tripped.
(a) Remove PDP cover (para 3-17a).
(b) Position main light switch to OFF (para 2-27c).
(c) If circuit breaker is tripped, push in to reset.
(d) Position main light switch to SER DRIVE (para 2-27c).
(e) Check circuit breaker to see if it tripped. If circuit breaker is tripped, notify Unit Maintenance.
(f) Position main light switch to OFF (para 2-27c).
(g) Install PDP cover (para 3-17b).
(h) If left or right front turn signal still does not illuminate, notify Unit Maintenance.

Table 3-2. Troubleshooting (Cont)

MALFUNCTION TEST OR INSPECTION CORRECTIVE ACTION
e. ELECTRICAL SYSTEM (CONT)
e58. ONE OR BOTH STOPLIGHTS DO NOT ILLUMINATE.
Step 1. Check operation of all vehicle lights (para 2-27c). If stoplights and blackout stoplights do not illuminate, perform Electrical System Troubleshooting (e60. Stoplights and Blackout Stoplights Do Not Illuminate. If both stoplights do not illuminate, notify Unit Maintenance.
Step 2. Check circuit breakers (CB43, CB44, and CB76) in PDP to see if they are tripped.
(a) Remove PDP cover (para 3-17a).
(b) Position main light switch to OFF (para 2-27c).
(c) If circuit breakers are tripped, push in to reset.
(d) Position main light switch to SER DRIVE (para 2-27c).
(e) Check circuit breaker to see if it tripped. If circuit breaker is tripped, notify Unit Maintenance.
(f) Position main light switch to OFF (para 2-27c).
(g) Install PDP cover (para 3-17b).
(h) If one or both stoplights do not illuminate, notify Unit Maintenance.
e59. ONE OR BOTH BLACKOUT STOPLIGHTS DO NOT OPERATE.
Step 1. Check operation of all vehicle lights (para 2-27c). If either light is not working, notify Unit Maintenance.
Step 2. Check circuit breaker (CB76) in PDP to see if it is tripped.
(a) Remove PDP cover (para 3-17a).
(b) Position main light switch to OFF (para 2-27c).
(c) If circuit breaker is tripped, push in to reset.
(d) Position main light switch to SER DRIVE (para 2-27c).
(e) Check circuit breaker to see if it tripped. If circuit breaker is tripped, notify Unit Maintenance.
(f) Position main light switch to OFF (para 2-27c).
(g) Install PDP cover (para 3-17b).
(h) If one or both blackout stoplights still do not operate, notify Unit Maintenance.
e60. STOPLIGHTS AND BLACKOUT STOPLIGHTS DO NOT ILLUMINATE.
Step 1. Check operation of all vehicle lights (para 2-27c). If either light does not illuminate, notify Unit Maintenance.

Table 3-2. Troubleshooting (Cont)

MALFUNCTION TEST OR INSPECTION CORRECTIVE ACTION
e60. STOPLIGHTS AND BLACKOUT STOPLIGHTS DO NOT OPERATE (CONT).
Step 2. Check circuit breaker (CB76) in PDP to see if it is tripped.
(a) Remove PDP cover (para 3-17a).
(b) Position main light switch to OFF (para 2-27c).
(c) If circuit breaker is tripped, push in to reset.
(d) Position main light switch to SER DRIVE (para 2-27c).
(e) Check circuit breaker to see if it tripped. If circuit breaker is tripped, notify Unit Maintenance.
(f) Position main light switch to OFF (para 2-27c).
(g) Install PDP cover (para 3-17b).
(h) If stoplights and blackout stoplights still do not illuminate, notify Unit Maintenance.
e61. STOPLIGHTS DO NOT OPERATE WHEN M1088 TRAILER BRAKES ARE APPLIED.
Check operation of all vehicle lights (para 2-27c).
If either light is not working, notify Unit Maintenance.
e62. TRAILER MARKER/TAILLIGHTS DO NOT ILLUMINATE.
Notify Unit Maintenance.
e63. TRAILER RIGHT STOP/TURN LIGHT DOES NOT ILLUMINATE.
Notify Unit Maintenance.
e64. TRAILER LEFT STOP/TURN LIGHT DOES NOT ILLUMINATE.
Notify Unit Maintenance.
e65. TRAILER BLACKOUT MARKER LIGHTS DO NOT ILLUMINATE.
Notify Unit Maintenance.
e66. TRAILER BLACKOUT STOPLIGHTS DO NOT ILLUMINATE.
Notify Unit Maintenance.
e67. INTERVEHICLE CLEARANCE LIGHTS DO NOT OPERATE.
Notify Unit Maintenance.
e68. INTERVEHICLE LEFT TURN SIGNAL DOES NOT OPERATE.
Notify Unit Maintenance.

Table 3-2. Troubleshooting (Cont)

MALFUNCTION TEST OR INSPECTION CORRECTIVE ACTION
e. ELECTRICAL SYSTEM (CONT)
e69. INTERVEHICLE RIGHT TURN SIGNAL DOES NOT OPERATE.
Notify Unit Maintenance.
e70. INTERVEHICLE STOPLIGHTS DO NOT OPERATE.
Notify Unit Maintenance.
e71. INTERVEHICLE TAILLIGHTS DO NOT OPERATE.
Notify Unit Maintenance.
e72. PERSONNEL HEATER CONTROL ILLUMINATION DOES NOT OPERATE.
Step 1. Check operation of all vehicle lights (para 2-27c). If either light is not working, notify Unit Maintenance.
Step 2. Check circuit breaker (CB23) in PDP to see if it is tripped. (a) Remove PDP cover (para 3-17a). (b) Position main light switch to OFF (para 2-27c). (c) If circuit breaker is tripped, push in to reset. (d) Position main light switch to SER DRIVE (para 2-27c). (e) Check circuit breaker to see if it tripped. If circuit breaker is tripped, notify Unit Maintenance. (f) Position main light switch to OFF (para 2-27c). (g) Install PDP cover (para 3-17b). (h) If personnel heater control illumination still does not operate, notify Unit Maintenance.
e73. PERSONNEL HEATER FAN DOES NOT OPERATE.
Check circuit breaker (CB23) in PDP to see if it is tripped. (a) Remove PDP cover (para 3-17a). (b) Position master power switch to off (para 2-27f). (c) If circuit breaker is tripped, push in to reset. (d) Position master power switch to on (para 2-27a or b). (e) Check circuit breaker in PDP to see if it is tripped. If circuit breaker is tripped, notify Unit Maintenance. (f) Position master power switch to off (para 2-27f). (g) Install PDP cover (para 3-17b). (h) If personnel heater fan still does not operate, notify Unit Maintenance.

Table 3-2. Troubleshooting (Cont)

MALFUNCTION TEST OR INSPECTION CORRECTIVE ACTION
e74. WINDSHIELD WASHER DOES NOT OPERATE.
Check circuit breaker (CB54) in PDP to see if it is tripped.
(a) Remove PDP cover (para 3-17a).
(b) Position master power switch to off (para 2-27f).
(c) If circuit breaker is tripped, push in to reset.
(d) Position master power switch to on (para 2-27a or b).
(e) Check circuit breaker to see if it tripped. If circuit breaker is tripped, notify Unit Maintenance.
(f) Position master power switch to off (para 2-27f).
(g) Install PDP cover (para 3-17b).
(h) If windshield washer still does not operate, notify Unit Maintenance.
e75. WINDSHIELD WIPER DOES NOT OPERATE ON LOW SPEED.
Check circuit breaker (CB37) in PDP to see if it is tripped.
(a) Remove PDP cover (para 3-17a).
(b) Position master power switch to off (para 2-27f).
(c) If circuit breaker is tripped, push in to reset.
(d) Position master power switch to on (para 2-27a or b).
(e) Check circuit breaker to see if it tripped. If circuit breaker is tripped, notify Unit Maintenance.
(f) Position master power switch to off (para 2-27f).
(g) Install PDP cover (para 3-17b).
(h) If windshield wiper still does not operate, notify Unit Maintenance.
e76. ALL WINDSHIELD WIPER SPEEDS DO NOT OPERATE.
Check circuit breaker (CB37) in PDP to see if it is tripped.
(a) Remove PDP cover (para 3-17a).
(b) Position master power switch to off (para 2-27f).
(c) If circuit breaker is tripped, push in to reset.
(d) Position master power switch to on (para 2-27a or b).
(e) Check circuit breaker to see if it tripped. If circuit breaker is tripped, notify Unit Maintenance.

Table 3-2. Troubleshooting (Cont)

MALFUNCTION TEST OR INSPECTION CORRECTIVE ACTION
e. ELECTRICAL SYSTEM (CONT)
e76. ALL WINDSHIELD WIPER SPEEDS DO NOT OPERATE (CONT)
(f) Position master power switch to off (para 2-27f).
(g) Install PDP cover (para 3-17b).
(h) If all windshield wiper speeds still does not operate, notify Unit Maintenance.
e77. WINDSHIELD WIPER SPEED DOES NOT OPERATE ON INTERMITTENT SPEED.
Check circuit breaker (CB37) in PDP to see if it is tripped.
(a) Remove PDP cover (para 3-17a).
(b) Position master power switch to off (para 2-27f).
(c) If circuit breaker is tripped, push in to reset.
(d) Position master power switch to on (para 2-27a or b).
(e) Check circuit breaker to see if it tripped. If circuit breaker is tripped, notify Unit Maintenance.
(f) Position master power switch to off (para 2-27f).
(g) Install PDP cover (para 3-17b).
(h) If windshield wiper speed still does not operate on intermittent speed, notify Unit Maintenance.
e78. WINDSHIELD WIPER DOES NOT OPERATE ON HIGH SPEED.
Check circuit breaker (CB37) in PDP to see if it is tripped.
(a) Remove PDP cover (para 3-17a).
(b) Position master power switch to off (para 2-27f).
(c) If circuit breaker is tripped, push in to reset.
(d) Position master power switch to on (para 2-27a or b).
(e) Check circuit breaker to see if it tripped. If circuit breaker is tripped, notify Unit Maintenance.
(f) Position master power switch to off (para 2-27f).
(g) Install PDP cover (para 3-17b).
(h) If windshield wiper speed still does not operate on high speed, notify Unit Maintenance.
e79. HORN DOES NOT OPERATE.
Check circuit breaker (CB36) in PDP to see if it is tripped.
(a) Remove PDP cover (para 3-17a).

Table 3-2. Troubleshooting (Cont)

MALFUNCTION TEST OR INSPECTION CORRECTIVE ACTION
e79. HORN DOES NOT OPERATE (CONT)
(b) Position master power switch to off (para 2-27f).
(c) If circuit breaker is tripped, push in to reset.
(d) Position master power switch to on (para 2-27a or b).
(e) Check circuit breaker to see if it tripped. If circuit breaker is tripped, notify Unit Maintenance.
(f) Position master power switch to off (para 2-27f).
(g) Install PDP cover (para 3-17b).
(h) If horn still does not operate, notify Unit Maintenance.
e80. CHEMICAL ALARM DOES NOT OPERATE.
Check circuit breaker (CB30) in PDP to see if it is tripped.
(a) Remove PDP cover (para 3-17a).
(b) Position master power switch to off (para 2-27f).
(c) If circuit breaker is tripped, push in to reset.
(d) Position master power switch to on (para 2-27a or b).
(e) Check circuit breaker to see if it tripped. If circuit breaker is tripped, notify Unit Maintenance.
(f) Position master power switch to off (para 2-27f).
(g) Install PDP cover (para 3-17b).
(h) If chemical alarm still does not operate, notify Unit Maintenance.
e81. CHEMICAL DETECTOR DOES NOT OPERATE.
Check circuit breaker (CB30) in PDP to see if it is tripped.
(a) Remove PDP cover (para 3-17a).
(b) Position master power switch to off (para 2-27f).
(c) If circuit breaker is tripped, push in to reset.
(d) Position master power switch to on (para 2-27a or b).
(e) Check circuit breaker to see if it tripped. If circuit breaker is tripped, notify Unit Maintenance.
(f) Position master power switch to off (para 2-27f).

Table 3-2. Troubleshooting (Cont)

MALFUNCTION TEST OR INSPECTION CORRECTIVE ACTION
e. ELECTRICAL SYSTEM (CONT)
e81. CHEMICAL DETECTOR DOES NOT OPERATE (CONT).
(g) Install PDP cover (para 3-17b).
(h) If chemical detector still does not operate, notify Unit Maintenance.
e82. CENTRAL TIRE INFLATION SYSTEM (CTIS) DOES NOT OPERATE.
Check circuit breaker (CB30) in PDP to see if it is tripped.
(a) Remove PDP cover (para 3-17a).
(b) Position master power switch to off (para 2-27f).
(c) If circuit breaker is tripped, push in to reset.
(d) Position master power switch to on (para 2-27a or b).
(e) Check circuit breaker to see if it tripped. If circuit breaker is tripped, notify Unit Maintenance.
(f) Position master power switch to off (para 2-27f).
(g) Install PDP cover (para 3-17b).
(h) If CTIS still does not operate, notify Unit Maintenance.
e83. CENTRAL TIRE INFLATION SYSTEM (CTIS) DOES NOT INFLATE TIRES.
Step 1. Check operation of CTIS to deflate tires (para 2-30). If CTIS does not deflate tires, notify Unit Maintenance.
Step 2. Check circuit breaker (CB40) in PDP to see if it is tripped.
(a) Remove PDP cover (para 3-17a).
(b) Position master power switch to off (para 2-27f).
(c) If circuit breaker is tripped, push in to reset.
(d) Position master power switch to on (para 2-27a or b).
(e) Check circuit breaker to see if it tripped. If circuit breaker is tripped, notify Unit Maintenance.
(f) Position master power switch to off (para 2-27f).
(g) Install PDP cover (para 3-17b).
(h) If CTIS still does not inflate tires, notify Unit Maintenance.
e84. CENTRAL TIRE INFLATION SYSTEM (CTIS) DOES NOT DEFLATE TIRES.
Step 1. Check operation of CTIS to inflate tires (para 2-30). If CTIS does not inflate tires, notify Unit Maintenance.

Table 3-2. Troubleshooting (Cont)

MALFUNCTION TEST OR INSPECTION CORRECTIVE ACTION
e84. CENTRAL TIRE INFLATION SYSTEM (CTIS) DOES NOT DEFLATE TIRES (CONT).
Step 2. Check circuit breaker (CB40) in PDP to see if it is tripped.
(a) Remove PDP cover (para 3-17a).
(b) Position master power switch to off (para 2-27f).
(c) If circuit breaker is tripped, push in to reset.
(d) Position master power switch to on (para 2-27a or b).
(e) Check circuit breaker to see if it tripped. If circuit breaker is tripped, notify Unit Maintenance.
(f) Install PDP cover (para 3-17b).
(g) Position master power switch to off (para 2-27f).
(h) If CTIS still does not deflate tires, notify Unit Maintenance.
e85. 15K SELF-RECOVERY WINCH (SRW) DOES NOT REEL IN OR PAY OUT.
Check circuit breaker (CB49) in PDP to see if it is tripped.
(a) Remove PDP cover (para 3-17a).
(b) Position master power switch to off (para 2-27f).
(c) If circuit breaker is tripped, push in to reset.
(d) Position master power switch to on (para 2-27a or b).
(e) Check circuit breaker to see if it tripped. If circuit breaker is tripped, notify Unit Maintenance.
(f) Position master power switch to off (para 2-27f).
(g) Install PDP cover (para 3-17b).
(h) If 15K SRW still does not reel in or pay out, notify Unit Maintenance.
e86. 15K SELF-RECOVERY WINCH (SRW) DOES NOT REEL IN.
Check circuit breaker (CB49) in PDP to see if it is tripped.
(a) Remove PDP cover (para 3-17a).
(b) Position master power switch to off (para 2-27f).
(c) If circuit breaker is tripped, push in to reset.
(d) Position master power switch to on (para 2-27a or b).

Table 3-2. Troubleshooting (Cont)

MALFUNCTION TEST OR INSPECTION CORRECTIVE ACTION
e. ELECTRICAL SYSTEM (CONT)
e86. 15K SELF-RECOVERY WINCH (SRW) DOES NOT REEL IN (CONT).
(e) Check circuit breaker to see if it tripped. If circuit breaker is tripped, notify Unit Maintenance.
(f) Position master power switch to off (para 2-27f).
(g) Install PDP cover (para 3-17b).
(h) If 15K SRW still does not reel in, notify Unit Maintenance.
e87. 15K SELF-RECOVERY WINCH (SRW) DOES NOT PAY OUT.
Check circuit breaker (CB49) in PDP to see if it is tripped.
(a) Remove PDP cover (para 3-17a).
(b) Position master power switch to off (para 2-27f).
(c) If circuit breaker is tripped, push in to reset.
(d) Position master power switch to on (para 2-27a or b).
(e) Check circuit breaker to see if it tripped. If circuit breaker is tripped, notify Unit Maintenance.
(f) Position master power switch to off (para 2-27f).
(g) Install PDP cover (para 3-17b).
(h) If 15K SRW still does not pay out, notify Unit Maintenance.
e88. POWER TAKE-OFF (PTO) DOES NOT OPERATE.
Check circuit breaker (CB49) in PDP to see if it is tripped.
(a) Remove PDP cover (para 3-17a).
(b) Position master power switch to off (para 2-27f).
(c) If circuit breaker is tripped, push in to reset.
(d) Position master power switch to on (para 2-27a or b).
(e) Check circuit breaker to see if it tripped. If circuit breaker is tripped, notify Unit Maintenance.
(f) Position master power switch to off (para 2-27f).
(g) Install PDP cover (para 3-17b).
(h) If PTO still does not operate, notify Unit Maintenance.

Table 3-2. Troubleshooting (Cont)

MALFUNCTION TEST OR INSPECTION CORRECTIVE ACTION
e89. ELECTRICAL SYSTEM DOES NOT MAINTAIN A CHARGE.
Step 1. Check to see if battery cables and terminal posts in good condition.
(a) Remove battery box cover (para 3-8a).
(b) Check battery cables for apparent damage and corrosion.
If corrosion is present or battery cables are damaged, notify Unit Maintenance.
(c) Check terminal posts for corrosion.
If corrosion is present, notify Unit Maintenance.
Step 2. Check fluid levels in battery cells (para 3-8b).
If fluid level is low, notify Unit Maintenance.
(a) Install battery box cover (para 3-8c).
Step 3. Check to see if engine oil pressure indicator light illuminates.
(a) Position master power switch to on (para 2-27a or b).
If engine oil pressure indicator light does not illuminate, notify Unit Maintenance.
(b) Position master power switch to off (para 2-27f).
Step 4. Check to see if OIL PRESS gage operates.
(a) Start engine (para 2-27a or b).
If OIL PRESS gage does not operate, notify Unit Maintenance.
(b) Shut down engine (para 2-27f).
Step 5. Check to see if alternator belts are tight and in good condition.
(a) Raise cab (para 2-28a).
(b) Check alternator belts for tension and visible damage.
If alternator belts are loose or damaged, notify Unit Maintenance.
If alternator belts are tight and free of damage, notify Unit Maintenance.
(c) Lower cab (para 2-28b).
e90. WTEC II TRANSMISSION ECU PUSHBUTTON SHIFT SELECTOR (TEPSS) ILLUMINATION DOES NOT DIM.
Check circuit breaker (CB77) in PDP to see if it is tripped.
(a) Remove PDP cover (para 3-17a).
(b) Position master power switch to off (para 2-27f).

Table 3-2. Troubleshooting (Cont)

MALFUNCTION TEST OR INSPECTION CORRECTIVE ACTION
e. ELECTRICAL SYSTEM (CONT)
e90. WTEC II TRANSMISSION ECU PUSHBUTTON SHIFT SELECTOR (TEPSS) ILLUMINATION DOES NOT DIM (CONT).
(c) If circuit breaker is tripped, push in to reset.
(d) Position master power switch to on (para 2-27a or b).
(e) Check circuit breaker to see if it tripped. If circuit breaker is tripped, notify Unit Maintenance.
(f) Position master power switch to off (para 2-27f).
(g) Install PDP cover (para 3-17b).
(h) If WTEC II TEPSS illumination still does not dim, notify Unit Maintenance.
e91. DIFFERENTIAL LOCK SOLENOID DOES NOT OPERATE.
Notify Unit Maintenance.
e92. ENGINE FAN RUNS CONSTANTLY.
Check circuit breaker (CB22) in PDP to see if it is tripped.
(a) Remove PDP cover (para 3-17a).
(b) Shut down engine (para 2-27f).
(c) If circuit breaker is tripped, push in to reset.
(d) Start engine (para 2-27a or b).
(e) Check circuit breaker to see if it tripped. If circuit breaker is tripped, notify Unit Maintenance.
(f) Shut down engine (pare 2-27f).
(g) Install PDP cover (para 3-17b).
(h) If engine fan still runs constantly, notify Unit Maintenance.
e93. ENGINE FAN DOES NOT TURN OFF USING RADIATOR FAN OFF SWITCH.
Check circuit breaker (CB22) in PDP to see if it is tripped.
(a) Remove PDP cover (para 3-17a).
(b) Shut down engine (para 2-27f).
(c) If circuit breaker is tripped, push in to reset.
(d) Start engine (para 2-27a or b).
(e) Check circuit breaker to see if it tripped. If circuit breaker is tripped, notify Unit Maintenance.
(f) Shut down engine (para 2-27f).

Table 3-2. Troubleshooting (Cont)

MALFUNCTION TEST OR INSPECTION CORRECTIVE ACTION
e93. ENGINE FAN DOES NOT TURN OFF USING RADIATOR FAN OFF SWITCH (CONT).
(g) Install PDP cover (para 3-17b).
(h) If engine fan still does not turn off using radiator fan off switch, notify Unit Maintenance.
e94. ETHER START DOES NOT OPERATE.
Check circuit breaker (CB22) in PDP to see if it is tripped.
(a) Remove PDP cover (para 3-17a).
(b) Position master power switch to off (para 2-27f).
(c) If circuit breaker is tripped, push in to reset.
(d) Attempt to start engine (para 2-27a or b).
(e) Position master power switch to off (para 2-27f).
(f) Check circuit breaker to see if it tripped. If circuit breaker is tripped, notify Unit Maintenance.
(g) Install PDP cover (para 3-17b).
(h) If ether start still does not operate, notify Unit Maintenance.
e95. EXCESSIVE CONDENSATION IN FUEL.
Check circuit breaker (CB79) in PDP to see if it is tripped.
(a) Remove PDP cover (para 3-17a).
(b) If circuit breaker is tripped, push in to reset. If circuit breaker is tripped or trips again, notify Unit Maintenance.
(c) Install PDP cover (para 3-17b).
(d) If excessive condensation is still in fuel, notify Unit Maintenance.
e96. RADIO DOES NOT OPERATE.
Check circuit breaker (CB20) in PDP to see if it is tripped.
(a) Remove PDP cover (para 3-17a).
(b) Position radio to OFF.
(c) Position master power switch to off (para 2-27f).
(d) If circuit breaker is tripped, push in to reset.
(e) Position master power switch to on (para 2-27a or b).
(f) Position radio to on.
(g) If circuit breaker is tripped or trips again, notify Unit Maintenance.

Table 3-2. Troubleshooting (Cont)

MALFUNCTION TEST OR INSPECTION CORRECTIVE ACTION
e. ELECTRICAL SYSTEM (CONT)
e96. RADIO DOES NOT OPERATE (CONT).
(h) Position master power switch to off (para 2-27f).
(i) Install PDP cover (para 3-17b).
(j) If radio still does not operate, notify Unit Maintenance.
e97. START INHIBIT PUSHBUTTON DOES NOT OPERATE.
Check circuit breaker (CB79) in PDP to see if it is tripped.
(a) Remove PDP cover (para 3-17a).
(b) Position master power switch to off (para 2-27f).
(c) If circuit breaker is tripped, push in to reset.
(d) Attempt to start engine (para 2-27a or b).
(e) Position master power switch to off (para 2-27f).
(f) Check circuit breaker to see if it tripped. If circuit breaker is tripped, notify Unit Maintenance.
(g) Install PDP cover (para 3-17b).
(h) If start inhibit pushbutton still does not operate, notify Unit Maintenance.
e98. AIR DRYER DOES NOT OPERATE (ALL MODELS EXCEPT M1090/M1094).
Notify Unit Maintenance.
e99. M1090/M1094 AIR DRYER DOES NOT OPERATE.
Notify Unit Maintenance.
e100. BATTERY TESTER DOES NOT OPERATE.
Notify Unit Maintenance.
e101. M1084/M1086 MATERIAL HANDLING CRANE (MHC) DOES NOT OPERATE.
Notify Unit Maintenance.
e102. M1084/M1086 MATERIAL HANDLING CRANE (MHC) DOES NOT OPERATE FROM REMOTE CONTROL.
Notify Unit Maintenance.
e103. M1084/M1086 MATERIAL HANDLING CRANE (MHC) HOIST UP DOES NOT OPERATE FROM REMOTE STATION.
Notify Unit Maintenance.

Table 3-2. Troubleshooting (Cont)

MALFUNCTION TEST OR INSPECTION CORRECTIVE ACTION
e104. M1084/M1086 MATERIAL HANDLING CRANE (MHC) HOIST DOWN DOES NOT OPERATE FROM REMOTE STATION.
Notify Unit Maintenance.
e105. M1084/M1086 MATERIAL HANDLING CRANE (MHC) BOOM UP DOES NOT OPERATE FROM REMOTE STATION.
Notify Unit Maintenance.
e106. M1084/M1086 MATERIAL HANDLING CRANE (MHC) BOOM DOWN DOES NOT OPERATE FROM REMOTE STATION.
Notify Unit Maintenance.
e107. M1084/M1086 MATERIAL HANDLING CRANE (MHC) TELESCOPE IN DOES NOT OPERATE FROM REMOTE STATION.
Notify Unit Maintenance.
e108. M1084/M1086 MATERIAL HANDLING CRANE (MHC) TELESCOPE OUT DOES NOT OPERATE FROM REMOTE STATION.
Notify Unit Maintenance.
e109. M1084/M1086 MATERIAL HANDLING CRANE (MHC) SWING CW DOES NOT OPERATE FROM REMOTE STATION.
Notify Unit Maintenance.
e110. M1084/M1086 MATERIAL HANDLING CRANE (MHC) SWING CCW DOES NOT OPERATE FROM REMOTE STATION.
Notify Unit Maintenance.
e111. M1084/M1086 MATERIAL HANDLING CRANE (MHC) OVERLOAD SHUTDOWN SYSTEM DOES NOT ACTIVATE.
Notify Unit Maintenance.
e112. M1084/M1086 MATERIAL HANDLING CRANE (MHC) OVERLOAD SHUTDOWN SYSTEM STAYS ACTIVATED.
Notify Unit Maintenance.
e113. M1084/M1086 MATERIAL HANDLING CRANE (MHC) HOIST UP LOCKOUT DOES NOT ACTIVATE.
Notify Unit Maintenance.
e114. M1084/M1086 MATERIAL HANDLING CRANE (MHC) BOOM DOWN LOCKOUT DOES NOT ACTIVATE.
Notify Unit Maintenance.

Table 3-2. Troubleshooting (Cont)

MALFUNCTION TEST OR INSPECTION CORRECTIVE ACTION
e. ELECTRICAL SYSTEM (CONT)
e115. M1084/M1086 MATERIAL HANDLING CRANE (MHC) BOOM UP LOCKOUT DOES NOT ACTIVATE.
Notify Unit Maintenance.
e116. M1084/M1086 MATERIAL HANDLING CRANE (MHC) TELESCOPE OUT DOES NOT
Notify Unit Maintenance.
e117. M1089 MATERIAL HANDLING CRANE (MHC) DOES NOT OPERATE.
Notify Unit Maintenance.
e118. M1089 MATERIAL HANDLING CRANE (MHC) DOES NOT OPERATE FROM REMOTE CONTROL.
Notify Unit Maintenance.
e119. M1089 MATERIAL HANDLING CRANE (MHC) HOIST UP DOES NOT OPERATE FROM REMOTE STATION.
Notify Unit Maintenance.
e120. M1089 MATERIAL HANDLING CRANE (MHC) HOIST DOWN DOES NOT OPERATE FROM REMOTE STATION.
Notify Unit Maintenance.
e121. M1089 MATERIAL HANDLING CRANE (MHC) BOOM UP DOES NOT OPERATE FROM REMOTE STATION.
Notify Unit Maintenance.
e122. M1089 MATERIAL HANDLING CRANE (MHC) BOOM DOWN DOES NOT OPERATE FROM REMOTE STATION.
Notify Unit Maintenance.
e123. M1089 MATERIAL HANDLING CRANE (MHC) TELESCOPE IN DOES NOT OPERATE FROM REMOTE STATION.
Notify Unit Maintenance.
e124. M1089 MATERIAL HANDLING CRANE (MHC) TELESCOPE OUT DOES NOT OPERATE FROM REMOTE STATION.
Notify Unit Maintenance.
e125. M1089 MATERIAL HANDLING CRANE (MHC) SWING CW DOES NOT OPERATE FROM REMOTE STATION.
Notify Unit Maintenance.

Table 3-2. Troubleshooting (Cont)

MALFUNCTION TEST OR INSPECTION CORRECTIVE ACTION
e126. M1089 MATERIAL HANDLING CRANE (MHC) SWING CCW DOES NOT OPERATE FROM REMOTE STATION.
Notify Unit Maintenance.
e127. M1089 MATERIAL HANDLING CRANE (MHC) HOIST UP LOCKOUT DOES NOT ACTIVATE.
Notify Unit Maintenance.
e128. M1089 MATERIAL HANDLING CRANE (MHC) BOOM DOWN LOCKOUT DOES NOT ACTIVATE.
Notify Unit Maintenance.
e129. M1089 MATERIAL HANDLING CRANE (MHC) BOOM UP LOCKOUT DOES NOT ACTIVATE.
Notify Unit Maintenance.
e130. M1089 MATERIAL HANDLING CRANE (MHC) TELESCOPE OUT LOCKOUT DOES NOT ACTIVATE.
Notify Unit Maintenance.
e131. M1089 MATERIAL HANDLING CRANE (MHC) OVERLOAD SHUTDOWN SYSTEM DOES NOT ACTIVATE.
Notify Unit Maintenance.
e132. M1089 MATERIAL HANDLING CRANE (MHC) OVERLOAD SHUTDOWN SYSTEM STAYS ACTIVATED.
Notify Unit Maintenance.
e133. ALL WRECKER FUNCTIONS DO NOT OPERATE FROM WRECKER CONTROL PANEL AND WRECKER REMOTE CONTROL.
Notify Unit Maintenance.
e134. ALL WRECKER FUNCTIONS DO NOT OPERATE FROM WRECKER REMOTE CONTROL.
Notify unit Maintenance.
e135. ALL WRECKER FUNCTIONS DO NOT OPERATE FROM WRECKER CONTROL PANEL.
Notify Unit Maintenance.
e135a. M1089 LH OR RH 30K WINCH DOES NOT PAY-IN.
(a) Check hydraulic tank oil level (para 2-22). If hydraulic tank oil is low, fill hydraulic tank to proper level (Appendix F) and attempt to operate faulty 30K winch (2-42).
(b) Check MAIN WINCH LH and RH FREESPOOL switches are OFF (para 2-42).
(c) Position MODE SELECTOR SWITCH to NORMAL.

Table 3-2. Troubleshooting (Cont)

MALFUNCTION TEST OR INSPECTION CORRECTIVE ACTION
e. ELECTRICAL SYSTEM (CONT)
e135a. M1089 LH OR RH 30K WINCH DOES NOT PAY-IN (CONT).
(d) Attempt to operate faulty 30K winch (para 2-42). If LH or RH 30K winch still does not pay-in, notify Unit Maintenance.
e136. MAIN WINCH LH OR RH SPEED SWITCH DOES NOT OPERATE.
Step 1. Check to see if circuit breaker (CB50) in Power Distribution Panel (PDP) is tripped.
(a) Remove PDP cover (para 3-17a).
(b) Check to see if circuit breaker (CB50) is tripped. If circuit breaker (CB50) is tripped, push in to reset. If circuit breaker (CB50) is not tripped, go to step 2 of this fault.
(c) Disconnect wrecker remote control (para 2-43c).
(d) Position wrecker control panel MAIN WINCH RH SPEED switch to HIGH.
(e) Position wrecker control panel MAIN WINCH LH SPEED switch to HIGH.
(f) Check to see if circuit breaker (CB50) is tripped. If circuit breaker (CB50) is tripped, go to step 2 of this 1fault.
(g) Attempt to operate faulty 30K winch at high speed (para 2-42).
(h) Check to see if circuit breaker (CB50) is tripped. If circuit breaker (CB50) is tripped, perform e138. ONE WRECKER FUNCTION DOES NOT OPERATE FROM WRECKER REMOTE CONTROL.
(i) Install PDP cover (para 3-17b).
Step 2. Does LH and RH 30K winches operate from wrecker control panel?
(a) Start engine (para 2-27a or b).
(b) Position Power Take-Off (PTO) switch to on.
CAUTION Keep tachometer within 1,250-1,450 rpm when PTO is engaged. Do not exceed 1,450 rpm. Failure to comply may result in damage to equipment.
NOTE In the event of a tachometer failure a HAND THROTTLE lever is positioned to L is approximately 1,250-1,450 rpm.
(c) Set engine speed by increasing HAND THROTTLE lever until tachometer reads 1,250-1,450 rpm.

Table 3-2. Troubleshooting (Cont)

MALFUNCTION TEST OR INSPECTION CORRECTIVE ACTION
e136. MAIN WINCH LH OR RH SPEED SWITCH DOES NOT OPERATE (CONT).

WARNING

Goggles must be worn while operating wrecker control panel. Blowing dust and debris may become air borne while engine is running. Failure to comply may result in injury to personnel.

(d) Position MODE SELECTOR SWITCH to NORMAL.

(e) Position STATION SELECTOR switch to WRECKER CONTROL PANEL.

CAUTION

MAIN WINCH RH SPEED switch must be in LOW position during payout of the first five wraps of cable. Failure to comply may result in damage to equipment.

(f) Position MAIN WINCH RH SPEED switch to LOW.

CAUTION

Keep tachometer within 1,250-1,450 rpm when Power Take-Off (PTO) is engaged. Do not exceed 1,450 rpm. Failure to comply may result in damage to equipment.

(g) Position MAIN WINCH RH FREESPOOL switch to OFF.

(h) Position MAIN WINCH RH lever to OUT.

(i) Payout first five wraps of cable.

(j) Position MAIN WINCH RH SPEED switch to HIGH.

(k) Pay out cable for approximately 20 seconds.

If RH 30K winch does not operate, perform Wrecker Hydraulic System Troubleshooting task w9. RH 30K WINCH DOES NOT OPERATE.

If MAIN WINCH RH SPEED switch does not operate, notify Unit Maintenance.

(l) Position MAIN WINCH RH SPEED switch to LOW.

(m) Position MAIN WINCH RH lever to IN.

(n) Reel in cable until cable is fully recovered.

(o) Repeat steps (f) through (m) for LH 30K winch.

Table 3-2. Troubleshooting (Cont)

MALFUNCTION TEST OR INSPECTION CORRECTIVE ACTION
e. ELECTRICAL SYSTEM (CONT)
e136. MAIN WINCH LH OR RH SPEED SWITCH DOES NOT OPERATE (CONT).
If LH 30K winch does not operate, perform Wrecker Hydraulic System Troubleshooting task w4. LH 30K WINCH DOES NOT OPERATE.
If MAIN WINCH LH SPEED switch does not operate, notify Unit Maintenance.
(p) Set engine speed to idle (750 rpm) by decreasing HAND THROTTLE lever to full down position.
(q) Position PTO switch to off.
(r) Shut down engine (para 2-27f).
e137. MAIN WINCH LH OR RH FREESPOOL SWITCH DOES NOT OPERATE FROM WRECKER CONTROL PANEL.
NOTE
MAIN WINCH LH or RH FREESPOOL switch must be positioned to ON for 30K winch to freespool.
Step 1. Will faulty 30K winch operate at high speed?
(a) Attempt to operate a faulty 30K winch at high speed (para 2-42).
If 30K winch does not operate at high speed, perform e136. Main Winch LH or RH Speed Switch Does Not Operate From Wrecker Control Panel.
If 30K winch does not operate at high speed, notify Unit Maintenance.
e138. ONE WRECKER FUNCTION DOES NOT OPERATE FROM WRECKER REMOTE CONTROL.
Notify Unit Maintenance.
e139. M1090/M1094 TAILGATE RELEASE DOES NOT OPERATE.
Notify Unit Maintenance.
e140. DUMP BED UP DOES NOT OPERATE.
Notify Unit Maintenance.
e141. DUMP BED DOWN DOES NOT OPERATE.
Notify Unit Maintenance.
e142. TRANSMISSION AUXILIARY OIL COOLER FAN(S) RUNS CONSTANTLY.
Notify Unit Maintenance.

Table 3-2. Troubleshooting (Cont)

MALFUNCTION TEST OR INSPECTION CORRECTIVE ACTION
e143. TRANSMISSION AUXILIARY OIL COOLER FAN DOES NOT OPERATE (ALL MODELS EXCEPT M1088/M1089).
Check circuit breaker (CB68) in PDP to see if it is tripped.
(a) Remove PDP cover (para 3-17a).
(b) Position master power switch to off (para 2-27f).
(c) If circuit breaker is tripped, push in to reset.
(d) Position master power switch to on (para 2-27a or b).
(e) Check circuit breaker to see if it tripped. If circuit breaker is tripped, notify Unit Maintenance.
(f) Position master power switch to off (para 2-27f).
(g) Install PDP cover (para 3-17b).
(h) If transmission auxiliary oil cooler fan still does not operate, notify Unit Maintenance.
e144. M1088/M1089 TRANSMISSION AUXILIARY OIL COOLER FAN DOES NOT OPERATE.
Check circuit breaker (CB68) in PDP to see if it is tripped.
(a) Remove PDP cover (para 3-17a).
(b) Position master power switch to off (para 2-27f).
(c) If circuit breaker is tripped, push in to reset.
(d) Position master power switch to on (para 2-27a or b).
(e) Check circuit breaker to see if it tripped. If circuit breaker is tripped, notify Unit Maintenance.
(f) Position master power switch to off (para 2-27f).
(g) Install PDP cover (para 3-17b).
(h) If transmission auxiliary oil cooler fan still does not operate, notify Unit Maintenance.
e145. M1088/M1089 WORKLIGHTS DO NOT ILLUMINATE.
Check circuit breaker (CB72) in PDP to see if it is tripped.
(a) Remove PDP cover (para 3-17a).
(b) Position master power switch to off (para 2-27f).
(c) If circuit breaker is tripped, push in to reset.
(d) Position master power switch to on (para 2-27a or b).

Table 3-2. Troubleshooting (Cont)

MALFUNCTION TEST OR INSPECTION CORRECTIVE ACTION
e. ELECTRICAL SYSTEM (CONT)
e145. M1088/M1089 WORKLIGHTS DO NOT ILLUMINATE (CONT).
(e) Check circuit breaker to see if it tripped. If circuit breaker is tripped, notify Unit Maintenance.
(f) Position master power switch to off (para 2-27f).
(g) Install PDP cover (para 3-17b).
(h) If worklights still do not illuminate, notify Unit Maintenance.
e146. M1088/M1089 (LH) WORKLIGHT DOES NOT ILLUMINATE.
Notify Unit Maintenance.
e147. M1088/M1089 (RH) WORKLIGHT DOES NOT ILLUMINATE.
Notify Unit Maintenance.
e148. M1088/M1089 WORKLIGHTS DO NOT ILLUMINATE IN BLACKOUT MODE WITH BLACKOUT OVERRIDE SWITCH ON.
Notify Unit Maintenance.
e149. M1084/M1086 WORKLIGHTS DO NOT ILLUMINATE.
Check circuit breaker (CB72) in PDP to see if it is tripped.
(a) Remove PDP cover (para 3-17a).
(b) Position master power switch to off (para 2-27f).
(c) If circuit breaker is tripped, push in to reset.
(d) Position master power switch to on (para 2-27a or b).
(e) Check circuit breaker to see if it tripped. If circuit breaker is tripped, notify Unit Maintenance.
(f) Position master power switch to off (para 2-27f).
(g) Install PDP cover (para 3-17b).
(h) If worklights still do not illuminate, notify Unit Maintenance.
f. TRANSMISSION SYSTEM
f1. WTEC II TRANSMISSION ECU PUSHBUTTON SHIFT SELECTOR (TEPSS) EMITS EIGHT SECONDS OF BEEPS AND/OR TRANSMISSION DOES NOT SHIFT GEARS.
Notify Unit Maintenance.

Table 3-2. Troubleshooting (Cont)

MALFUNCTION TEST OR INSPECTION CORRECTIVE ACTION
f1a. WTEC II TRANSMISSION ECU PUSHBUTTON SHIFT SELECTOR (TEPSS) DOES NOT ILLUMINATE **NOTE** Perform Electrical System Troubleshooting (e1. Engine Does Not Crank), prior to beginning this task. Check circuit breaker (CB35 and CB79) in PDP to see if they are tripped. (a) Remove PDP cover (para 3-17a). (b) Position master power switch to off (para 2-27f). (c) If circuit breaker(s) is tripped, push in to reset. (d) Position master power switch to on (para 2-27a or b). (e) Check circuit breakers in PDP to see if they tripped again. If circuit breakers tripped again, notify Unit Maintenance. (f) Position master power switch to off (para 2-27f). (g) Install PDP cover (para 3-17b). (h) If WTEC II TEPSS still does not illuminate, notify Unit Maintenance. **f2. TRANSMISSION UNUSUALLY NOISY WHEN OPERATING.** Step 1. Check transmission oil level (para 2-18, item 36). (a) If transmission oil level is low, add transmission oil (Appendix F). (b) If transmission oil level is high, notify Unit Maintenance. Step 2. Check transmission oil for contamination. (a) If transmission oil is contaminated, notify Unit Maintenance. (b) If transmission is still unusually noisy when operating, notify Unit Maintenance. **f3. WTEC III TRANSMISSION PUSHBUTTON SHIFT SELECTOR (TPSS) DISPLAYS "--" AND/OR DOES NOT SHIFT GEARS.** Notify Unit Maintenance. **f4. WTEC III TRANSMISSION PUSHBUTTON SHIFT SELECTOR (TPSS) DOES NOT ILLUMINATE** **NOTE** Perform Electrical System Troubleshooting (e1. Engine Does Not Crank), prior to beginning this task. Check circuit breaker (CB43 and CB79) in PDP to see if they are tripped. (a) Remove PDP cover (para 3-17a).

Table 3-2. Troubleshooting (Cont)

MALFUNCTION TEST OR INSPECTION CORRECTIVE ACTION
f. TRANSMISSION SYSTEM (CONT)
f4. WTEC III TRANSMISSION PUSHBUTTON SHIFT SELECTOR (TPSS) DOES NOT ILLUMINATE (CONT).
(b) Position master power switch to off (para 2-27f).
(c) If circuit breaker(s) is tripped, push in to reset.
(d) Position master power switch to on (para 2-27a or b).
(e) Check circuit breakers in PDP to see if they tripped again. If circuit breakers tripped again, notify Unit Maintenance.
(f) Position master power switch to off (para 2-27f).
(g) Install PDP cover (para 3-17b).
(h) If WTEC III TPSS still does not illuminate, notify Unit Maintenance.
g. PROPELLER SHAFT
g1. PROPELLER SHAFTS OR UNIVERSAL JOINTS UNUSUALLY NOISY WHEN OPERATING.
Notify Unit Maintenance.
h. POWER TAKE OFF (PTO)
h1. POWER TAKE-OFF (PTO) DOES NOT ENGAGE.
Notify Unit Maintenance.
i. BRAKE SYSTEM
i1. EXCESSIVE BRAKING DISTANCE.
Check to see if air tanks are pressurized.
(a) Start engine (para 2-27a or b).
(b) Allow engine to idle until 120 psi is registered on FRONT BRAKE AIR and REAR BRAKE AIR pressure gages.
(c) Shut down engine (para 2-27f).
(d) If either FRONT BRAKE AIR or REAR BRAKE AIR pressure gages do not register 120 psi, notify Unit Maintenance.
(e) If braking distance is still excessive, notify Unit Maintenance.
i2. REAR BRAKES DO NOT APPLY.
Check to see if air tanks are pressurized.
(a) Start engine (para 2-27a or b).

Table 3-2. Troubleshooting (Cont)

MALFUNCTION TEST OR INSPECTION CORRECTIVE ACTION
i2. REAR BRAKES DO NOT APPLY (CONT).
(b) Allow engine to idle until 120 psi is registered on FRONT BRAKE AIR and REAR BRAKE AIR pressure gages.
(c) Shut down engine (para 2-27f).
(d) If either FRONT BRAKE AIR or REAR BRAKE AIR pressure gages do not register 120 psi, notify Unit Maintenance.
(e) If rear brakes still do not apply, notify Unit Maintenance.
i3. PARKING BRAKE(S) WILL NOT RELEASE.
Check to see if air tanks are pressurized.
(a) Start engine (para 2-27a or b).
(b) Allow engine to idle until 120 psi is registered on FRONT BRAKE AIR and REAR BRAKE AIR pressure gages.
(c) Shut down engine (para 2-27f).
(d) If either FRONT BRAKE AIR or REAR BRAKE AIR pressure gages do not register 120 psi, notify Unit Maintenance.
(e) If parking brake(s) still will not release, notify Unit Maintenance.
i4. FRONT BRAKES OVERHEAT AND/OR DO NOT RELEASE.
Step 1. Check tires for proper inflation and damage (para 2-18, item 38).
(a) If tires are improperly inflated, start engine (para 2-27a or b) and select correct CTIS mode.
(b) Shut down engine (para 2-27f).
(c) Check for proper inflation.
(d) If tires are damaged, notify Unit Maintenance.
Step 2. Inspect front gladhands.
(a) Check front gladhands for damage and air leaks. If damage is present or air leaks are heard, notify Unit Maintenance.
(b) Remove dummy couplings and check for obstructions. If gladhands are obstructed, clean gladhands.
(c) Inspect and lubricate coupler seals (Appendix F).
(d) Ensure that dummy couplings are properly installed.
(e) If front brakes still overheat, notify Unit Maintenance.

Table 3-2. Troubleshooting (Cont)

MALFUNCTION TEST OR INSPECTION CORRECTIVE ACTION
i. BRAKE SYSTEM (CONT)
i5. VEHICLE BRAKES UNEVENLY, BRAKES PULL TO ONE SIDE OR GRAB.
Check to see if air tanks are pressurized.
(a) Start engine (para 2-27a or b).
(b) Allow engine to idle until 120 psi is registered on FRONT BRAKE AIR and REAR BRAKE AIR pressure gages.
(c) Shut down engine (para 2-27f).
(d) If either FRONT BRAKE AIR or REAR BRAKE AIR pressure gages do not register 120 psi, notify Unit Maintenance.
(e) If vehicle still brakes unevenly, brakes pull to one side, or grab, notify Unit Maintenance.
i6. FRONT BRAKES DO NOT APPLY.
Check to see if air tanks are pressurized.
(a) Start engine (para 2-27a or b).
(b) Allow engine to idle until 120 psi is registered on FRONT BRAKE AIR and REAR BRAKE AIR pressure gages.
(c) Shut down engine (para 2-27f).
(d) If either FRONT BRAKE AIR or REAR BRAKE AIR pressure gages do not register 120 psi, notify Unit Maintenance.
(e) If front brakes still do not apply, notify Unit Maintenance.
i7. REAR BRAKES OVERHEAT.
Check tires for proper inflation and damage (para 2-18, item 38).
(a) If tires are improperly inflated, start engine (para 2-27a or b) and select correct CTIS mode.
(b) Shut down engine (para 2-27f).
(c) Check for proper inflation.
(d) If tires are damaged, notify Unit Maintenance.
(e) If rear brakes still overheat, notify Unit Maintenance.
i8. PARKING BRAKES DO NOT APPLY.
Check front and rear air pressure gages for 65-120 psi (para 2-27a or b).
If air pressure is below 65 psi, notify Unit Maintenance. If parking brakes still do not apply, notify Unit Maintenance.
i9. BRAKE SYSTEM LOSES AIR WHEN SERVICE BRAKES ARE APPLIED.
Notify Unit Maintenance.

Table 3-2. Troubleshooting (Cont)

MALFUNCTION TEST OR INSPECTION CORRECTIVE ACTION
j. AIR SYSTEM
j1. AIR SYSTEM LOSES PRESSURE DURING OPERATION/SLOW, NO, OR INCORRECT AIR PRESSURE BUILDUP.
Notify Unit Maintenance.
j2. LARGE QUANTITY OF MOISTURE EXPELLED FROM AIR RESERVOIRS.
Notify Unit Maintenance.
j3. AIR DRYER PURGES CONSTANTLY.
Notify Unit Maintenance.
j4. NO AIR PRESSURE PRESENT AT REAR GLADHAND(S) (ALL MODELS EXCEPT M1088).
Step 1. Check to see if vehicle brakes operate.
(a) Check vehicle parking brakes (para 2-27).
If parking brakes do not apply, perform Brake System Troubleshooting i8 Parking Brakes Do Not Apply.
(b) Check vehicle service brakes (para 2-27).
If service brakes do not apply, perform Brake System Troubleshooting i1 Excessive Braking Distance.
Step 2. Inspect air hoses for kinks, damage, and leaks.
(a) Inspect air hoses from rear gladhands to air brake protecting valve.
(b) Inspect air hoses from air brake protecting valve to TRAILER AIR SUPPLY valve.
(c) Inspect air hose from air brake protecting valve to inversion valve.
(d) Inspect air hose from inversion valve to front axle quick release valve tee fitting.
(e) Inspect air hose from air brake protecting valve to load sensing valve (all models except M1089).
(f) Inspect air hose from load sensing valve to booster valve (M1089 only).
(g) Inspect air hose from air brake protecting valve to booster valve (M1089 only).
(h) Inspect air hose from booster valve to service gladhand two-way check valve.
If any air hose is kinked, damaged, or leaking; notify Unit Maintenance.
Step 3. If air pressure is still not present at rear gladhand(s), notify Unit Maintenance.
j4a. NO AIR PRESSURE PRESENT AT ALL M1088 REAR AND FIFTH WHEEL GLADHANDS.
Step 1. Check to see if vehicle brakes operate.
(a) Check vehicle parking brakes (para 2-27).

Table 3-2. Troubleshooting (Cont)

MALFUNCTION TEST OR INSPECTION CORRECTIVE ACTION
j. AIR SYSTEM (CONT)
j4a. NO AIR PRESSURE PRESENT AT ALL M1088 REAR AND FIFTH WHEEL GLADHANDS (CONT).
If parking brakes do not apply, perform Brake System Troubleshooting i8 Parking Brakes Do Not Apply.
(b) Check vehicle service brakes (para 2-27).
If service brakes do not apply, perform Brake System Troubleshooting i1 Excessive Braking Distance.
Step 2. Inspect air hoses from air brake protecting valve to TRAILER AIR SUPPLY valve for kinks, damage, and leaks.
If air hose is kinked, damaged, or leaking; notify Unit Maintenance.
Step 3. If air pressure is still not present at rear and fifth wheel gladhands, notify Unit Maintenance.
j4b. NO AIR PRESSURE PRESENT AT M1088 REAR AND FIFTH WHEEL EMERGENCY GLADHAND(S)
Step 1. Check to see if air is present at rear service gladhand when service brakes are applied.
(a) Disconnect dummy coupling from rear service gladhand.
(b) Start engine (para 2-27).
(c) Apply service brakes (para 2-27).
(d) Check to see if air is present at rear service gladhand.
(e) Shut down engine (para 2-27).
(f) Connect dummy coupling to rear service gladhand.
If air is not present, perform Air System Troubleshooting j4A. No Air Pressure Present at All M1088 Rear and Fifth Wheel Service Gladhands.
Step 2. Inspect air hoses for kinks, damage, and leaks.
(a) Inspect air hoses from rear gladhands to three-way ball valves.
(b) Inspect air hoses from fifth wheel gladhands to three-way ball valves.
(c) Inspect air hoses from three-way ball valves to air brake protecting valve.
If any air hose is kinked, damaged, or leaking; notify Unit Maintenance.
Step 3. If air pressure is still not present at rear and/or fifth wheel emergency gladhand(s), notify Unit Maintenance.

Table 3-2. Troubleshooting (Cont)

MALFUNCTION TEST OR INSPECTION CORRECTIVE ACTION
j4c. NO AIR PRESSURE PRESENT AT M1088 REAR AND FIFTH WHEEL SERVICE GLADHAND(S)
Step 1. Check to see if air is present at rear emergency gladhand.
(a) Disconnect dummy coupling from rear emergency gladhand.
(b) Start engine (para 2-27).
(c) Check to see if air is present at rear emergency gladhand.
(d) Shut down engine (para 2-27).
(e) Connect dummy coupling to rear emergency gladhand.
If air is not present, perform Air System Troubleshooting j4A. No Air Pressure Present at All M1088 Rear and Fifth Wheel Service Gladhands.
Step 2. Inspect air hoses for kinks, damage, and leaks.
(a) Inspect air hoses from rear gladhands to three-way ball valves.
(b) Inspect air hoses from fifth wheel gladhands to three-way ball valves.
(c) Inspect air hoses from three-way ball valves to air brake protecting valve.
(d) Inspect air hoses from air brake protecting valve to TRAILER AIR SUPPLY valve.
(e) Inspect air hose from air brake protecting valve to front axle quick release valve tee fitting.
(f) Inspect air hose from air brake protecting valve to booster valve.
(g) Inspect air hose from booster valve to service gladhand two-way check valve.
If any air hose is kinked, damaged, or leaking; notify Unit Maintenance.
Step 3. If air pressure is still not present at rear and or fifth wheel service gladhand(s), notify Unit Maintenance.
j4d. M1088 TRAILER HANDBRAKE CONTROL DOES NOT OPERATE
Step 1. Check to see if air is present at rear service gladhand when service brakes are applied.
(a) Disconnect dummy coupling from rear service gladhand.
(b) Start engine (para 2-27).
(c) Apply service brakes (para 2-27).
(d) Shut down engine (para 2-27).
(e) Connect dummy coupling to rear service gladhand.

Table 3-2. Troubleshooting (Cont)

MALFUNCTION
TEST OR INSPECTION
CORRECTIVE ACTION

j. AIR SYSTEM (CONT)

j4d. M1088 TRAILER HANDBRAKE CONTROL DOES NOT OPERATE (CONT).

If air is not present, perform Air Troubleshooting j4C. No Air Pressure Present at M1088 Rear and/or Fifth Wheel Service Gladhand(s).

Step 2. Inspect air hoses for kinks, damages, and leaks.

(a) Inspect air hose from trailer handbrake control to park control two-way check valve.

(b) Inspect air hose from trailer handbrake to personnel heater grommet.

(c) Inspect air hose from trailer handbrake to cab floor fitting.

(d) Inspect air hose from cab floor fitting to air brake protecting valve.

If any air hose is kinked, damaged, or leaking; notify Unit Maintenance.

Step 3. If M1088 trailer handbrake still does not operate, notify Unit Maintenance.

j5. AIR SYSTEM PRESSURE BUILDS UP MORE THAN 120 PSI (827 KPA) (COMPRESSOR FAILS TO UNLOAD).

Notify Unit Maintenance.

j6. NOISY AIR COMPRESSOR OPERATION.

Notify Unit Maintenance.

j7. M1088 REAR GLADHAND(S) LEAKS OR DOES NOT OPERATE.

Notify Unit Maintenance.

j8. M1090/M1094 TAILGATE RELEASE DOES NOT OPERATE.

Notify Unit Maintenance.

k. WHEEL

k1. TIRES WEAR UNEVENLY OR EXCESSIVELY.

Check tire pressures with tire gage for each CTIS setting.

(a) Notify Unit Maintenance if tire pressures do not match those given below:

ALL MODELS EXCEPT M1088 AND M1089		MODELS M1088 AND M1089	
HWY Mode	60 psi (414 kPa)	HWY Mode	81 psi (558 kPa)
X-C Mode	37 psi (255 kPa)	X-C Mode	54 psi (372 kPa)
SAND Mode	22 psi (152 kPa)	SAND Mode	32 psi (221 kPa)
EMER Mode	16 psi (110 kPa)	EMER Mode	24 psi (165 kPa)

(b) If tires still wear unevenly or excessively, notify Unit Maintenance.

Table 3-2. Troubleshooting (Cont)

MALFUNCTION TEST OR INSPECTION CORRECTIVE ACTION
k2. WHEEL WOBBLES OR SHIMMIES.
Step 1. Check wheel studs and lugnuts for obvious looseness.
WARNING **Notify Unit Maintenance that lugnuts need to be tightened to 415-475 lb-ft (563-644 N·m) as soon as possible. Wheel may come loose if lugnuts are not tightened to proper torque. Failure to comply may result in serious injury or death to personnel.**
If loose, tighten.
Step 2. Check for bent or broken studs and missing or loose lugnuts.
(a) Notify Unit Maintenance if two or more lugnuts or studs on the same wheel are missing, broken, or bent.
(b) If wheel still wobbles or shimmies, notify Unit Maintenance.
I. HYDRAULIC SYSTEM
l1. LOSS OF HYDRAULIC PRESSURE (SINGLE STAGE PUMP).
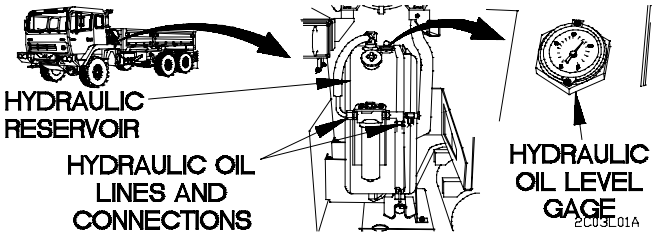
NOTE Hydraulic oil level gage should read two marks past the 3/4 mark during a cold check. This is a normal reading. Do not overfill reservoir.
Check hydraulic oil level gage to determine hydraulic oil level.
(a) If oil level is low, add hydraulic oil (Appendix F).
(b) If loss of hydraulic pressure continues, notify Unit Maintenance.

Table 3-2. Troubleshooting (Cont)

MALFUNCTION TEST OR INSPECTION CORRECTIVE ACTION

I. HYDRAULIC SYSTEM (CONT)

I2. LOSS OF HYDRAULIC PRESSURE (THREE STAGE PUMP).

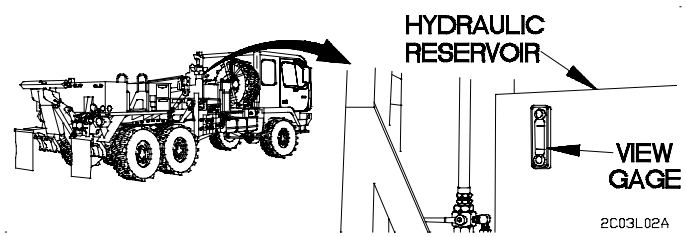

CAUTION

Hydraulic oil level must not be above, or more than 0.75 in. (1.9 cm) below black line on hydraulic oil view gage. Failure to comply may cause damage to hydraulic system.

Check hydraulic oil level at hydraulic oil view gage.

(a) If hydraulic oil view gage registers below black line, remove reservoir cap and fill hydraulic oil to appropriate level (Appendix F).

(b) Install reservoir cap.

(c) If loss of hydraulic pressure continues, notify Unit Maintenance.

m. CENTRAL TIRE INFLATION SYSTEM (CTIS)

m1. TWO STEADY MODE LIGHTS ILLUMINATE ON CENTRAL TIRE INFLATION SYSTEM (CTIS) ECU.

Notify Unit Maintenance.

m2. FOUR CENTRAL TIRE INFLATION SYSTEM (CTIS) ECU INDICATOR LIGHTS FLASHING.

Notify Unit Maintenance.

m3. FIVE CENTRAL TIRE INFLATION SYSTEM (CTIS) ECU INDICATOR LIGHTS FLASHING.

Notify Unit Maintenance.

m4. CENTRAL TIRE INFLATION SYSTEM (CTIS) REPEATEDLY RESUMES CYCLING 30 SECONDS AFTER INDICATOR LIGHTS STOP FLASHING.

Notify Unit Maintenance.

m5. CENTRAL TIRE INFLATION SYSTEM (CTIS) ECU INDICATES NO FAULT CODE BUT SYSTEM FAILS TO INFLATE OR DEFLATE.

Notify Unit Maintenance.

Table 3-2. Troubleshooting (Cont)

MALFUNCTION TEST OR INSPECTION CORRECTIVE ACTION

m6. NO OVERSPEED WARNING LIGHT AND/OR OVERSPEED PRESSURE CHANGE.

Notify Unit Maintenance.

n. AXLE

n1. AXLE DIFFERENTIAL(S) NOISY.

Notify Unit Maintenance.

p. STEERING SYSTEM

p1. HARD TO STEER.

Step 1. Check tire pressures with tire gage for each CTIS setting.

Notify Unit Maintenance if tire pressures do not match those given below:

ALL MODELS EXCEPT M1088 AND M1089		MODELS M1088 AND M1089	
HWY Mode	60 psi (414 kPa)	HWY Mode	81 psi (558 kPa)
X-C Mode	37 psi (255 kPa)	X-C Mode	54 psi (372 kPa)
SAND Mode	22 psi (152 kPa)	SAND Mode	32 psi (221 kPa)
EMER Mode	16 psi (110 kPa)	EMER Mode	24 psi (165 kPa)

Step 2. Raise cab (para 2-28a).

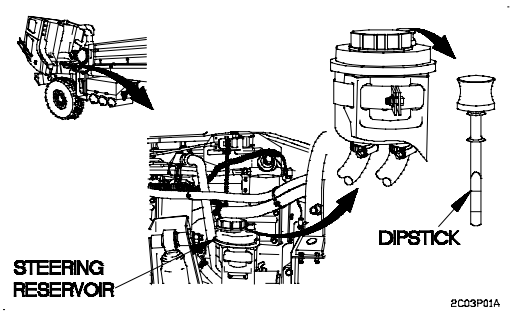

CAUTION

Do not overfill power steering reservoir. Failure to comply may result in damage to equipment.

Step 3. Check that steering reservoir is filled to proper level. Oil should be level with full mark on dipstick.

(a) Add oil as required.

Table 3-2. Troubleshooting (Cont)

MALFUNCTION
TEST OR INSPECTION
CORRECTIVE ACTION

p. STEERING SYSTEM (CONT)

p1. HARD TO STEER (CONT).

(b) If oil level is over full mark, notify Unit Maintenance.

(c) If vehicle is still hard to steer, notify Unit Maintenance.

Step 4. Lower cab (para 2-28b).

p2. WANDERS, PULLS TO ONE SIDE, OR SHIMMIES.

Step 1. Check wheel studs and lugnuts for obvious looseness.

WARNING

Notify Unit Maintenance that lugnuts need to be tightened to 415-475 lb-ft (563-644 N·m) as soon as possible. Wheel may come loose if lugnuts are not tightened to proper torque. Failure to comply may result in serious injury or death to personnel.

If loose, tighten.

Step 2. Check for bent or broken studs and missing or loose lugnuts.

Step 3. Check tire pressures with tire gage for each CTIS setting.

(a) Notify Unit Maintenance if tire pressures do not match those given below:

ALL MODELS EXCEPT M1088 AND M1089		MODELS M1088 AND M1089	
HWY Mode	60 psi (414 kPa)	HWY Mode	81 psi (558 kPa)
X-C Mode	37 psi (255 kPa)	X-C Mode	54 psi (372 kPa)
SAND Mode	22 psi (152 kPa)	SAND Mode	32 psi (221 kPa)
EMER Mode	16 psi (110 kPa)	EMER Mode	24 psi (165 kPa)

(b) If vehicle still wanders, pulls to one side, or shimmies, perform Suspension System Troubleshooting (r1. Wanders, Pulls to One Side, or Shimmies).

p3. EXCESSIVE PLAY WHEN TURNING STEERING WHEEL.

CAUTION

Do not overfill power steering reservoir. Failure to comply may result in damage to equipment.

Check that steering reservoir is filled to proper level. Oil should be level with full mark on dipstick.

Table 3-2. Troubleshooting (Cont)

MALFUNCTION TEST OR INSPECTION CORRECTIVE ACTION

p3. EXCESSIVE PLAY WHEN TURNING STEERING WHEEL (CONT).

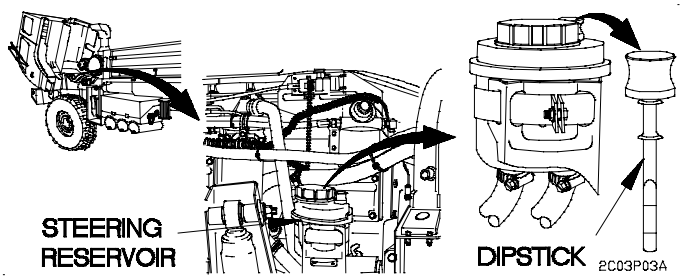

(a) Add oil as required.

(b) If oil level is over full mark, notify Unit Maintenance.

(c) If vehicle still has excessive play when turning steering wheel, notify Unit Maintenance.

(d) Lower cab (para 2-28b).

p4. NO RESPONSE WHEN TURNING STEERING WHEEL.

Notify Unit Maintenance.

q. FIFTH WHEEL

q1. FIFTH WHEEL DOES NOT LOCK WHEN COUPLING TRAILER TO TRACTOR.

Check that coupler jaws lock open.

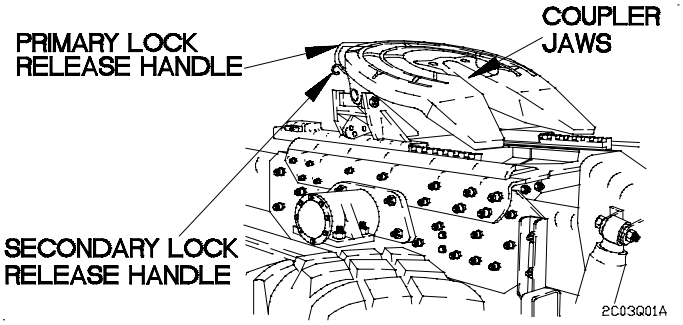

(a) Pull out secondary lock release handle and latch in position.

(b) Pull out primary lock release two times.

(c) Put primary lock release handle in locked position.

Table 3-2. Troubleshooting (Cont)

MALFUNCTION TEST OR INSPECTION CORRECTIVE ACTION
q. FIFTH WHEEL (CONT)
q1. FIFTH WHEEL DOES NOT LOCK WHEN COUPLING TRAILER TO TRACTOR (CONT).
(d) Check that jaws stay open with primary lock release handle in locked position.
(e) If fifth wheel still does not lock when coupling trailer to tractor, notify Unit Maintenance.
q2. EXCESSIVE MOVEMENT OF TRAILER KING PIN IN FIFTH WHEEL.
Notify Unit Maintenance.
q3. FIFTH WHEEL DOES NOT UNLOCK WHEN DISCONNECTING TRAILER FROM TRACTOR.
Check that coupler jaws lock open.
(a) Pull out secondary lock release handle and latch in position.
(b) Pull out primary lock release two times.
(c) Put primary lock release handle in locked position.
(d) Check that jaws stay open with primary lock release handle in locked position.
(e) If fifth wheel still does not lock when coupling trailer to tractor, notify Unit Maintenance.
q4. FIFTH WHEEL SLIDING MECHANISM DOES NOT OPERATE.
Check that coupler jaws lock open.
(a) Pull out secondary lock release handle and latch in position.
(b) Pull out primary lock release two times.
(c) Put primary lock release handle in locked position.
(d) Check that jaws stay open with primary lock release handle in locked position.
(e) If fifth wheel still does not lock when coupling trailer to tractor, notify Unit Maintenance.
r. SUSPENSION SYSTEM
r1. WANDERS, PULLS TO ONE SIDE, OR SHIMMIES.
Step 1. Perform Steering System Troubleshooting (p2. Wanders, Pulls to One Side, or Shimmies).
Step 2. Perform Brake System Troubleshooting (i5. Vehicle Brakes Unevenly, Brakes Pull to One Side or Grab).
Step 3. If vehicle continues to wander, pull to one side, or shimmy, notify Unit Maintenance.
r2. LEANS TO ONE SIDE, OR REAR OF VEHICLE SAGS.
Notify Unit Maintenance.

Table 3-2. Troubleshooting (Cont)

MALFUNCTION TEST OR INSPECTION CORRECTIVE ACTION

s. 15K SELF-RECOVERY WINCH (SRW)

s1. 15K SELF-RECOVERY WINCH (SRW) DOES NOT WORK.

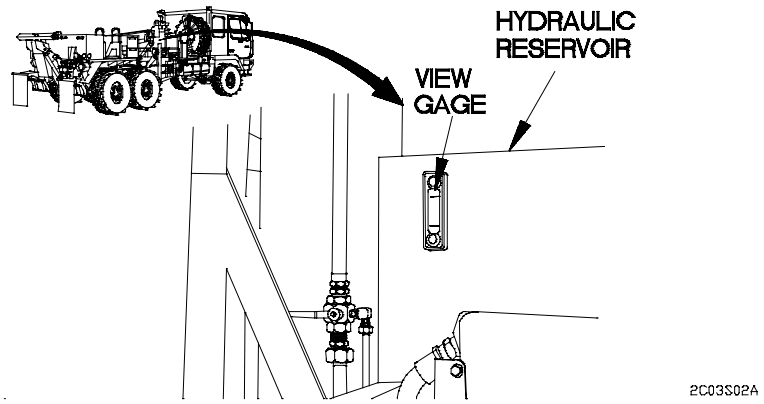

NOTE

- Perform step 1 on all models except M1089.
- Hydraulic oil level gage should read two marks past the 3/4 mark during a cold check. This is a normal reading. Do not overfill reservoir.

Step 1. Check hydraulic oil level gage to determine hydraulic oil level.

If oil level is low, add hydraulic oil (Appendix F).

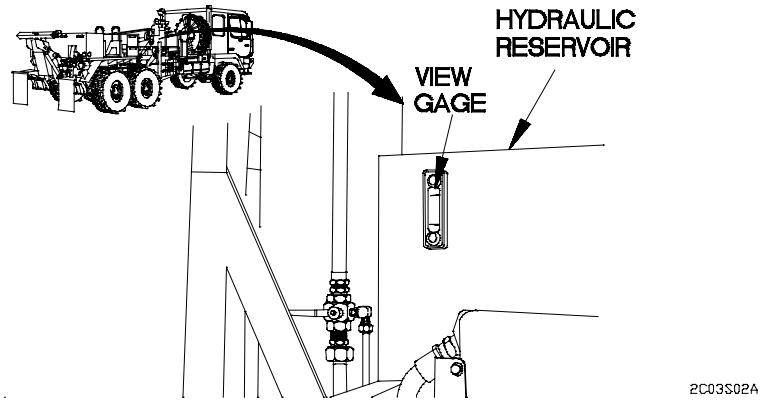

Table 3-2. Troubleshooting (Cont)

MALFUNCTION TEST OR INSPECTION CORRECTIVE ACTION

s. 15K SELF-RECOVERY WINCH (SRW) (CONT)

s1. 15K SELF-RECOVERY WINCH (SRW) DOES NOT WORK (CONT).

CAUTION

Hydraulic oil level must not be above, or more than 0.75 in. (1.9 cm) below black line on hydraulic oil view gage. Failure to comply may result in damage to equipment.

NOTE

Perform step 2 on M1089.

Step 2. Check hydraulic oil level at hydraulic oil view gage.

(a) If hydraulic oil view gage registers below black line, remove reservoir cap and fill hydraulic oil to appropriate level (Appendix F).

(b) Install reservoir cap.

Step 3. Check hydraulic lines and fittings for class III leaks.

If class III leaks are found or 15K SRW still does not work, notify Unit Maintenance.

t. STEERING HYDRAULIC SYSTEM

t1. STEERING HARD OR DOES NOT WORK.

Step 1. Raise cab (para 2-28a).

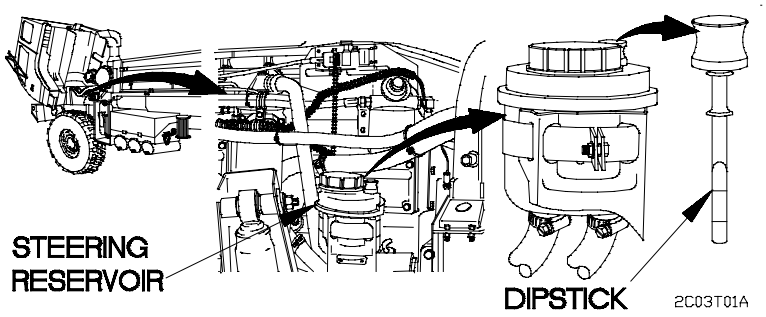

Table 3-2. Troubleshooting (Cont)

MALFUNCTION TEST OR INSPECTION CORRECTIVE ACTION
t1. STEERING HARD OR DES NOT WORK (CONT).
CAUTION Do not overfill power steering reservoir. Failure to comply may result in damage to equipment.
Step 2. Check that steering reservoir is filled to proper level. Oil should be level with full mark on dipstick. (a) Add oil as required. (b) If oil is over full mark, notify Unit Maintenance.
Step 3. Check hydraulic lines and fittings for Class III leaks. (a) If Class III leaks are found or steering is still hard or does not work, notify Unit Maintenance. (b) Lower cab (para 2-28b).
u. AIR TRANSPORT SYSTEM
u1. CAB TILT, SPARE TIRE RETAINER, AND SUSPENSION COMPRESSION DO NOT WORK.
Check hydraulic hoses, air lines, and fittings for Class III leaks. If Class III leaks are found or cab tilt, spare tire retainer, and suspension compression still do not work, notify Unit Maintenance.
u2. SUSPENSION DOES NOT COMPRESS OR RETURN TO NORMAL PROPERLY.
Step 1. Check to see if cab raises (para 2-28a). If cab does not raise, perform Air System Troubleshooting, (u1. Cab Tilt, Spare Tire Retainer, And Suspension Compression Do Not Work). Step 2. Check hydraulic hoses, air lines, and fittings for Class III leaks. If Class III leaks are found or suspension still will not compress or return to normal properly, notify Unit Maintenance.
u3. CAB LEVELING AIR SPRINGS DO NOT WORK PROPERLY.
Step 1. Check to see if CTIS operates properly (para 2-30). If CTIS does not operate properly, perform applicable CTIS System Troubleshooting (m Central Tire Inflation System (CTIS)). Step 2. Check leveling air springs (air bags), air lines, and fittings for leaks. (a) Start engine (para 2-27a or b). (b) Raise cab (para 2-28a).

Table 3-2. Troubleshooting (Cont)

MALFUNCTION TEST OR INSPECTION CORRECTIVE ACTION

u. AIR TRANSPORT SYSTEM

u3. CAB LEVELING AIR SPRINGS DO NOT WORK PROPERLY (CONT).

(c) Check leveling air springs (air bags), air lines, and fittings for air leaks. If air leaks are found, notify Unit Maintenance.

(d) Lower cab (para 2-28b).

(e) Shut down engine (para 2-27f).

v. DUMP BODY HYDRAULIC SYSTEM

v1. DUMP BODY DOES NOT RAISE.

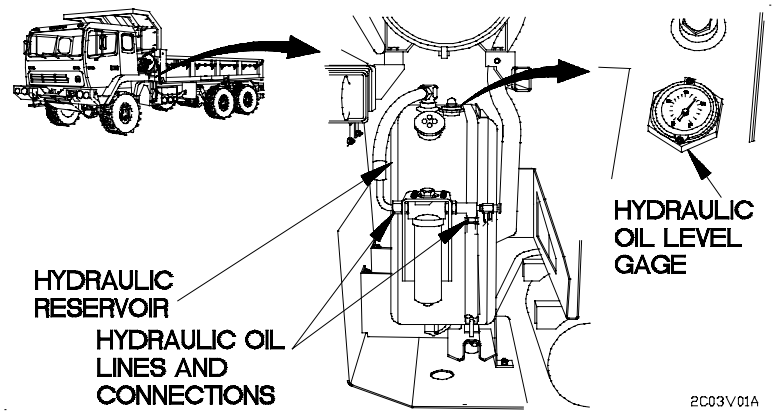

NOTE

Hydraulic oil level gage should read two marks past the 3/4 mark during a cold check. This is a normal reading. Do not overfill reservoir.

Step 1. Check hydraulic oil level gage to determine hydraulic oil level.

If hydraulic oil level is low, add hydraulic oil (Appendix F).

If hydraulic oil level is ok, notify Unit Maintenance.

v2. DUMP BODY DOES NOT LOWER.

NOTE

Hydraulic oil level gage should read two marks past the 3/4 mark during a cold check. This is a normal reading. Do not overfill reservoir.

Table 3-2. Troubleshooting (Cont)

MALFUNCTION TEST OR INSPECTION CORRECTIVE ACTION
v2. DUMP BODY DOES NOT LOWER (CONT).
Step 1. Check hydraulic oil level gage to determine hydraulic oil level. If hydraulic oil level is low, add hydraulic oil (Appendix F). If hydraulic oil level is ok, notify Unit Maintenance.
v3. DUMP BODY CREEPS DOWN FROM RAISED POSITION.
NOTE Hydraulic oil level gage should read two marks past the 3/4 mark during a cold check. This is a normal reading. Do not overfill reservoir.
Step 1. Check hydraulic oil level gage to determine hydraulic oil level. If hydraulic oil level is low, add hydraulic oil (Appendix F). If hydraulic oil is ok, notify Unit Maintenance.
w. WRECKER HYDRAULIC SYSTEM
w1. M1089 MATERIAL HANDLING CRANE (MHC) DOES NOT OPERATE.
Notify Unit Maintenance.
w2. M1089 STIFFLEGS/LEFT 30K WINCH/15K SELF-RECOVERY WINCH (SRW) DO NOT OPERATE.
Notify Unit Maintenance.
w3. M1089 STIFFLEG(S) DOES NOT OPERATE OR OPERATES SLOWLY.
Notify Unit Maintenance.
w4. M1089 LH 30K WINCH DOES NOT OPERATE.
NOTE Perform Electrical System Troubleshooting task e135A. M1089 LH or RH 30K WINCH DOES NOT PAY-IN and Wrecker Air System Troubleshooting task aa1. M1089 LH or RH 30K WINCH DOES NOT PAY-IN prior to beginning this task.
Notify Unit Maintenance.
w5. M1089 STINGER/TELESCOPIC LIFT CYLINDERS/FOLD CYLINDERS/RIGHT 30K WINCH DO NOT OPERATE.
Notify Unit Maintenance.
w6. M1089 STINGER DOES NOT OPERATE.
Notify Unit Maintenance.

Table 3-2. Troubleshooting (Cont)

MALFUNCTION TEST OR INSPECTION CORRECTIVE ACTION
w. WRECKER HYDRAULIC SYSTEM (CONT)
w7. M1089 UNDERLIFT TELESCOPIC LIFT CYLINDER(S) DOES NOT OPERATE.
Notify Unit Maintenance.
w8. M1089 FOLD CYLINDER DOES NOT OPERATE.
Notify Unit Maintenance.
w9. M1089 RIGHT 30K WINCH DOES NOT OPERATE.
NOTE Perform Electrical System Troubleshooting task e135A. M1089 LH or RH 30K WINCH DOES NOT PAY-IN and Wrecker Air System Troubleshooting task aa1. M1089 LH or RH 30K WINCH DOES NOT PAY-IN prior to beginning this task.
Notify Unit Maintenance.
w10. M1089 MATERIAL HANDLING CRANE (MHC) HAND PUMP DOES NOT WORK.
CAUTION Hydraulic oil level must not be above, or more than 0.75 in. (1.9 cm) below black line on hydraulic oil view gage. Failure to comply may result in damage to equipment.
Step 1. Check hydraulic oil level at hydraulic oil view gage.
(a) If hydraulic oil view gage registers below black line, remove reservoir cap and fill hydraulic oil to appropriate level (Appendix F).
(b) Install reservoir cap.
Step 2. Check hydraulic lines and fittings for class III leaks.
If class III leaks are found or wrecker MHC hand pump still does not work, notify Unit Maintenance.
w11. NO SERVICE HYDRAULIC POWER FROM M1089.
Notify Unit Maintenance.
w12. M1089 MATERIAL HANDLING CRANE (MHC) LEFT OR RIGHT OUTRIGGER (JACK) DRIFTS OR DOES NOT WORK.
Notify Unit Maintenance.
w13. M1089 MATERIAL HANDLING CRANE (MHC) MAST DOES NOT ERECT OR STOW.
Notify Unit Maintenance.

Table 3-2. Troubleshooting (Cont)

MALFUNCTION TEST OR INSPECTION CORRECTIVE ACTION
w14. M1089 MATERIAL HANDLING CRANE (MHC) OUTRIGGER EXTENSION CYLINDER DOES NOT WORK.
Notify Unit Maintenance.
w15. M1089 MATERIAL HANDLING CRANE (MHC) BOOM SWING DRIVE ASSEMBLY DOES NOT WORK.
Notify Unit Maintenance.
w16. M1089 MATERIAL HANDLING CRANE (MHC) BOOM DOES NOT LIFT UP OR DOWN.
Notify Unit Maintenance.
w17. M1089 MATERIAL HANDLING CRANE (MHC) BOOM DOES NOT TELESCOPE IN OR OUT.
Notify Unit Maintenance.
w18. M1089 MATERIAL HANDLING CRANE (MHC) HOIST DOES NOT WORK.
Notify Unit Maintenance.
w19. M1089 LEFT STIFFLEG DRIFTS OR DOES NOT WORK.
Notify Unit Maintenance.
w20. M1089 RIGHT STIFFLEG DRIFTS OR DOES NOT WORK.
Notify Unit Maintenance.
w21. M1089 PAY-OUT HYDRAULIC MOTOR ASSEMBLY DOES NOT WORK.
Notify Unit Maintenance.
x. SPECIAL PURPOSE KIT
x1. DELETED
x2. DELETED
x3. DELETED
x4. DELETED
x5. DELETED
x6. DELETED
x7. DELETED
x8. DELETED
x9. DELETED

Table 3-2. Troubleshooting (Cont)

MALFUNCTION TEST OR INSPECTION CORRECTIVE ACTION
x. SPECIAL PURPOSE KIT (CONT)
x10. DELETED
x11. DELETED
x12. DELETED
x13. DELETED
x14. DELETED
x15. DELETED
x16. DELETED
x17. TROOP TRANSPORT ALARM DOES NOT OPERATE.
Notify Unit Maintenance.
x18. LIGHT MATERIAL HANDLING CRANE (LMHC) DOES NOT OPERATE.
Check circuit breaker to see if it tripped (para 2-29b).
If LMHC still does not operate, notify Unit Maintenance.
x19. LIGHT MATERIAL HANDLING CRANE (LMHC) HOIST IN DOES NOT OPERATE.
Notify Unit Maintenance.
x20. LIGHT MATERIAL HANDLING CRANE (LMHC) HOIST OUT DOES NOT OPERATE.
Notify Unit Maintenance.
y. M1084/M1086 MATERIAL HANDLING CRANE (MHC) HYDRAULICS
y1. M1084/M1086 MATERIAL HANDLING CRANE (MHC) HAND PUMP DOES NOT WORK.
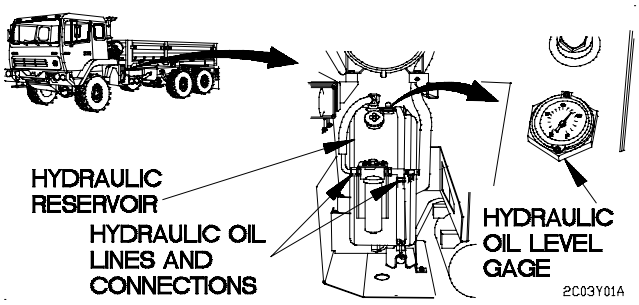
NOTE Hydraulic oil level gage should read two marks past the 3/4 mark during a cold check. This is a normal reading. Do not overfill reservoir.

Table 3-2. Troubleshooting (Cont)

MALFUNCTION TEST OR INSPECTION CORRECTIVE ACTION

y1. M1084/M1086 MATERIAL HANDLING CRANE (MHC) HAND PUMP DOES NOT WORK (CONT).

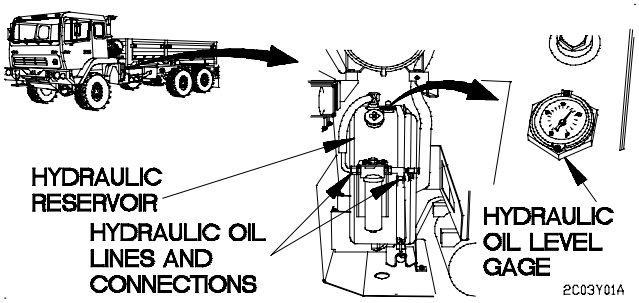

Step 1. Check hydraulic oil level gage to determine hydraulic oil level.

If oil level is low, add hydraulic oil (Appendix F).

Step 2. Check hydraulic lines and fittings for Class III leaks.

If Class III leaks are found or MHC hand pump still does not work, notify Unit Maintenance.

y2. M1084/M1086 MATERIAL HANDLING CRANE (MHC) HYDRAULIC FUNCTIONS OPERATE SLOWLY.

Notify Unit Maintenance.

y3. M1084/M1086 MATERIAL HANDLING CRANE (MHC) LEFT OUTRIGGER (JACK) DRIFTS OR DOES NOT OPERATE.

Notify Unit Maintenance.

y4. M1084/M1086 MATERIAL HANDLING CRANE (MHC) RIGHT OUTRIGGER (JACK) DRIFTS OR DOES NOT OPERATE.

Notify Unit Maintenance.

y5. M1084/M1086 MATERIAL HANDLING CRANE (MHC) MAST DOES NOT ERECT.

Notify Unit Maintenance.

y6. M1084/M1086 MATERIAL HANDLING CRANE (MHC) HOIST DOES NOT OPERATE.

Notify Unit Maintenance.

y7. M1084/M1086 MATERIAL HANDLING CRANE (MHC) SWING DRIVE DOES NOT OPERATE.

Notify Unit Maintenance.

Table 3-2. Troubleshooting (Cont)

MALFUNCTION TEST OR INSPECTION CORRECTIVE ACTION
y. M1084/M1086 MATERIAL HANDLING CRANE (MHC) HYDRAULICS (CONT)
y8. M1084/M1086 MATERIAL HANDLING CRANE (MHC) BOOM DOES NOT TELESCOPE IN OR OUT.
Notify Unit Maintenance.
y9. M1084/M1086 MATERIAL HANDLING CRANE (MHC) SWING, TELESCOPE, BOOM, AND HOIST DO NOT OPERATE.
Notify Unit Maintenance.
y10. M1084/M1086 MATERIAL HANDLING CRANE (MHC) BOOM DOES LIFT UP OR DOWN OR HOLD UNDER LOAD.
Notify Unit Maintenance.
z. CAB TILT AND SPARE TIRE RETAINER
z1. CAB DOES NOT RAISE.
Step 1. Check hydraulic oil level in air/hydraulic power unit (Appendix F).
If hydraulic oil level is low, add hydraulic oil (Appendix F).
Step 2. Check hydraulic hoses, air lines, and fittings for Class III leaks.
If Class III leaks are found or cab tilt still does not raise or lower properly, notify Unit Maintenance.
z2. CAB DOES NOT LOWER.
Step 1. Check hydraulic oil level in air/hydraulic power unit (Appendix F).
If hydraulic oil level is low, add hydraulic oil (Appendix F).
Step 2. Check hydraulic hoses, air lines, and fittings for Class III leaks.
If Class III leaks are found or cab still does not lower, notify Unit Maintenance.
z3. SPARE TIRE RETAINER DOES NOT RAISE.
Step 1. Check hydraulic oil level in air/hydraulic power unit (Appendix F).
If hydraulic oil level is low, add hydraulic oil (Appendix F).
Step 2. Check hydraulic hoses, air lines, and fittings for Class III leaks.
If Class III leaks are found or spare tire retainer still does not raise or lower properly, notify Unit Maintenance.
z4. SPARE TIRE RETAINER DOES NOT LOWER.
Step 1. Check hydraulic oil level in air/hydraulic power unit (Appendix F).
If hydraulic oil level is low, add hydraulic oil (Appendix F).

Table 3-2. Troubleshooting (Cont)

MALFUNCTION TEST OR INSPECTION CORRECTIVE ACTION
z. CAB TILT AND SPARE TIRE RETAINER (CONT)
z4. SPARE TIRE RETAINER DOES NOT LOWER (CONT).
Step 2. Check hydraulic hoses, air lines, and fittings for Class III leaks.
If Class III leaks are found or spare tire retainer still does not lower, notify Unit Maintenance.
aa. M1089 AIR SYSTEM TROUBLESHOOTING.
aa1. M1089 LH OR RH 30K WINCH DOES NOT PAY-IN.
NOTE Perform Electrical System Troubleshooting task e135A. M1089 LH or RH 30K Winch Does Not Pay-In prior to beginning this task.
Notify Unit Maintenance.
aa2. WRECKER LEFT OR RIGHT 30K WINCH FREESPOOL DOES NOT OPERATE.
NOTE Perform Electrical System Troubleshooting task (e137. Main Winch LH or RH Freespool Switch Does Not Operate From Wrecker Control Panel) prior to beginning this task.
Notify Unit Maintenance.
aa3. WRECKER LEFT OR RIGHT 30K WINCH CABLE DRUM TENSIONER DOES NOT OPERATE.
NOTE Perform Electrical System Troubleshooting task e137. Main Winch LH or RH Freespool Switch Does Not Operate From Wrecker Control Panel prior to beginning this task.
Notify Unit Maintenance.
aa4. MAIN WINCH LH AND RH FREESPOOLS DO NOT OPERATE
NOTE Perform Electrical System Troubleshooting task e137. Main Winch LH or RH Freespool Switch Does Not Operate From Wrecker Control Panel prior to beginning this task.
Notify Unit Maintenance.
aa5. M1089 LH OR RH 30K WINCH CABLE DRUM TENSIONER DOES NOT OPERATE
Step 1. Does MAIN WINCH LH/RH FREESPOOL switch operate?
(a) Start engine (para 2-27a or b).
(b) Position Power Take-Off (PTO) switch to on.

Table 3-2. Troubleshooting (Cont)

MALFUNCTION TEST OR INSPECTION CORRECTIVE ACTION
aa5. M1089 LH OR RH 30K WINCH CABLE DRUM TENSIONER DOES NOT OPERATE (CONT) **CAUTION** Keep tachometer within 1,250-1,450 rpm when Power Take-Off is engaged. Do not exceed 1,450 rpm. Failure to comply may result in damage to equipment. **NOTE** In the event of a tachometer failure a HAND THROTTLE lever positioned to L is approximately 1,250-1,450 rpm. (c) Set engine speed by increasing HAND THROTTLE lever until tachometer reads 1,250-1,450 rpm. (d) Position MODE SELECTOR SWITCH to NORMAL. (e) Position STATION SELECTOR switch to WRECKER CONTROL PANEL. (f) Position MAIN WINCH LH/RH FREESPOOL switch to ON. (g) Pull cable to see if LH/RH 30K winch drum freespools. If MAIN WINCH LH/RH FREESPOOL switch does not operate, perform Electrical System Troubleshooting task e137. Main Winch LH or RH Freespool Switch Does Not Operate From Wrecker Control Panel. If MAIN WINCH LH/RH FREESPOOL switch does operate, notify Unit Maintenance. (h) Position MAIN WINCH LH/RH FREESPOOL switch to OFF. (i) Set engine speed to idle (750 rpm) by decreasing HAND THROTTLE lever to full down position. (j) Position Power Take-Off switch to off. (k) Shut down engine (para 2-37f).
aa6. ONE WRECKER FUNCTION DOES NOT OPERATE FROM WRECKER REMOTE CONTROL. Notify Unit Maintenance.
ab. FRAME TROUBLESHOOTING
ab1. TIRES CONTINUE TO WEAR AFTER FRONT END ALIGNMENT AND/OR VEHICLE DRIVES SIDEWAYS DOWN ROAD. Notify Unit Maintenance.

Section III. MAINTENANCE PROCEDURES

3-4. INTRODUCTION

This section contains instructions for servicing, installing, and removing components at the Operator maintenance level.

3-5. CHANGING TIRE

This task covers:

a. Lower Spare Tire
b. Tire Removal
c. Tire Installation
d. Tire Stowage
e. Follow-On Maintenance

INITIAL SETUP

Equipment Conditions
Vehicle parked on level ground.
Engine shut down (para 2-27f).
Wheels chocked (para 2-27h).
Cab raised (para 2-28a).

Tools and Special Tools
Jack, Hydraulic (Item 32, Appendix B)

Tools and Special Tools (Cont)
Wrench, Socket (Item 53, Appendix B)
Jack Adapter Assembly (Item 31, Appendix B)

Personnel Required
(2)

a. Lower Spare Tire.

WARNING

Ensure vehicle is parked on level ground before changing flat tire. Vehicle may roll. Failure to comply may result in serious injury or death to personnel.

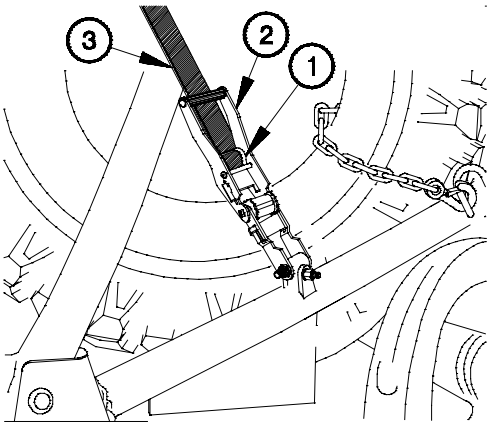

2C05A011

(1) Release latch (1) on ratchet (2).

(2) Lift ratchet (2) and release strap (3).

(3) Remove strap (3) from ratchet (2).

3-5. CHANGING TIRE (CONT)

(4) Disconnect safety chain (4) from spare tire retainer (5).

CAUTION

Rachet must be in the down position before cab is lowered. Failure to comply may result in damage to equipment.

(5) Place ratchet (2) in closed position.

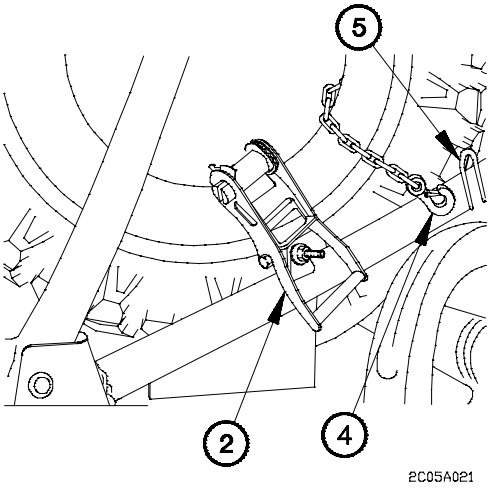

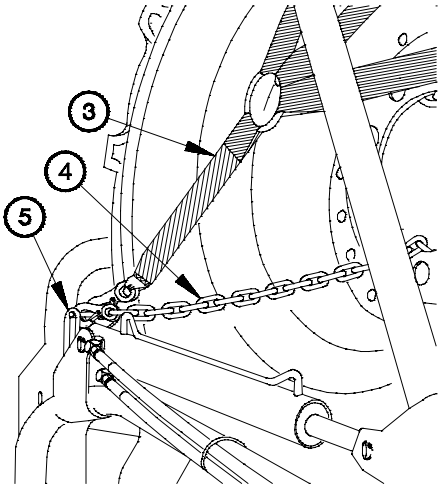

(6) Remove strap (3) and safety chain (4) from spare tire retainer (5).

CAUTION

Cab must remain raised to remove spare tire from M1089. Failure to comply may result in damage to equipment.

NOTE

Perform step (7) for all models except M1089.

(7) Lower cab (para 2-28b).

(8) Turn SPARE TIRE knob (6) to the LOWER position.

(9) Turn FUNCTION SELECT knob (7) to the SPARE TIRE position.

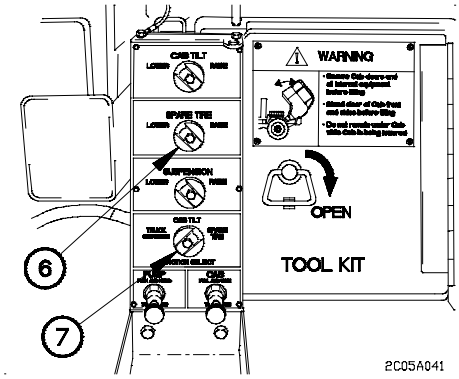

WARNING

Tire weighs approximately 350 lbs (159 kgs). If treads of tire catch on tool box during lowering, raise tire and pull tire away from tool box and continue lowering. Use extreme care when handling tire. Failure to comply may result in injury to personnel.

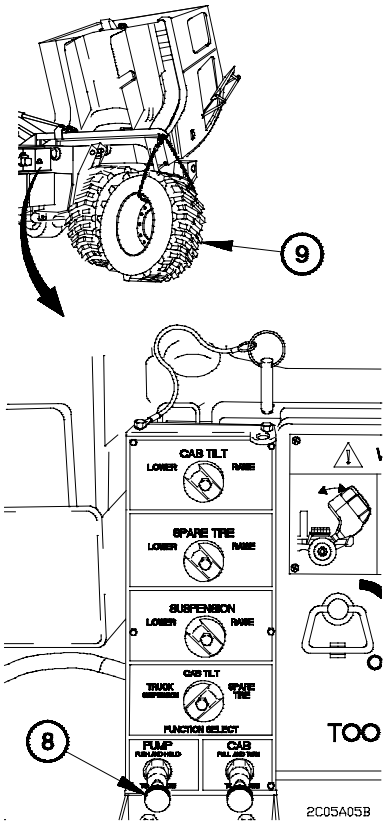

CAUTION

Use caution when lowering tire to prevent damage to CTIS wheel valve. Failure to comply may result in damage to equipment.

NOTE

Use back-up hydraulic pump (para 2-52) if pressing PUMP knob does not accomplish step (10).

(10) Press and hold PUMP knob (8) to lower spare tire (9) to ground.

3-5. CHANGING TIRE (CONT)

(11) Disconnect one end of chain (10) from spare tire retainer lift arm (11).

(12) Pull chain (10) through hole in spare tire (9).

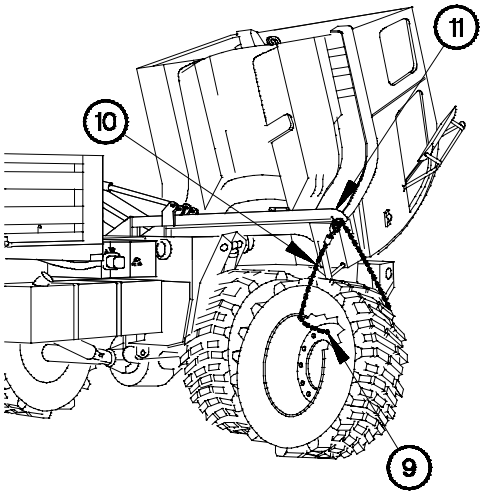

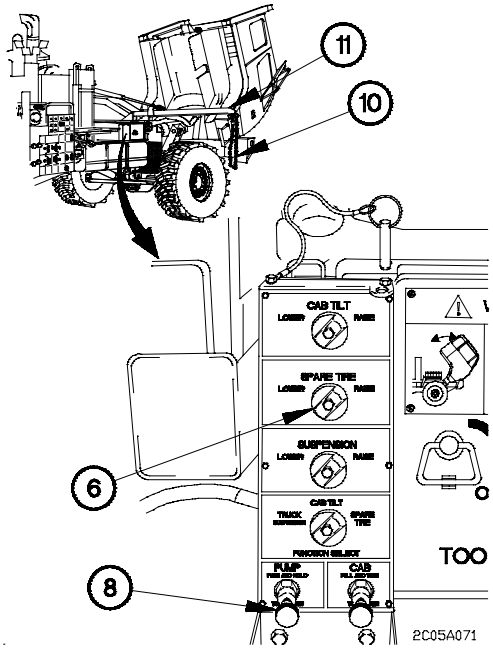

(13) Hook chain (10) to spare tire retainer lift arm (11).

NOTE

Perform steps (14) through (16) for M1089 only.

(14) Turn SPARE TIRE knob (6) to the RAISE position.

(15) Press and hold PUMP knob (8) to raise spare tire lift arm (11) to the vertical position.

(16) Lower cab (para 2-28b).

(17) Remove nut (12), two washers (13), and bolt (14) from CTIS hose (15).

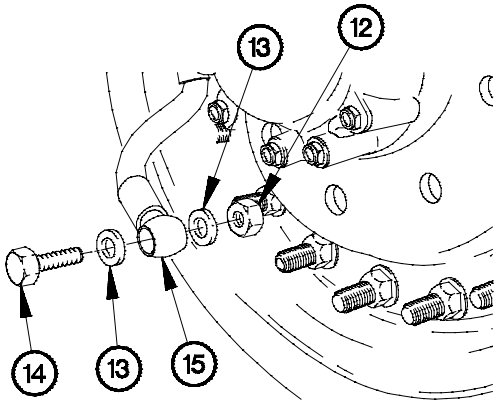

b. Tire Removal.

WARNING

- **Place hydraulic jack on flat surface. Do not allow personnel under vehicle when jacking. Failure to comply may result in serious injury or death to personnel.**
- **DO NOT use hydraulic jack without jack adapter installed. Failure to comply may result in serious injury or death to personnel.**

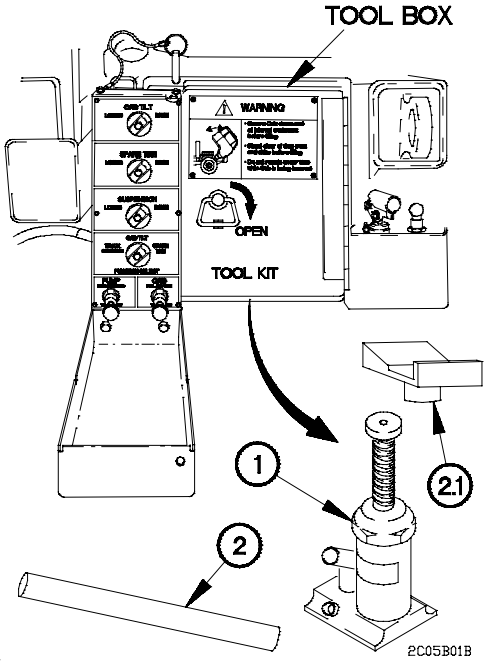

NOTE

Notify Unit Maintenance to install or replace jack adapter.

(1) Remove hydraulic jack (1), handle (2) and jack adapter (2.1) from tool box.

3-5. CHANGING TIRE (CONT)

NOTE

Perform steps (2) and (3) when removing front tire.

(2) Position hydraulic jack (1) under saddle (3) of leaf spring (4).

(3) Unscrew jack ram (5) until it touches saddle (3).

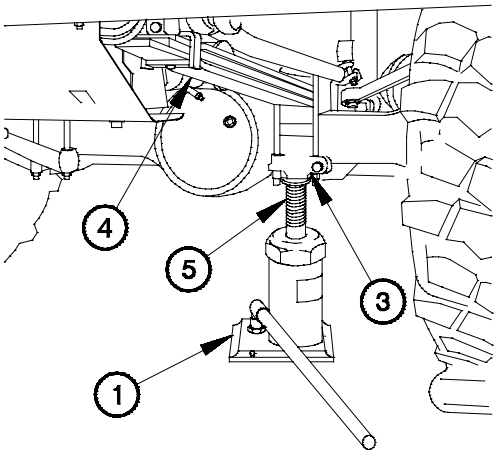

2C05B021

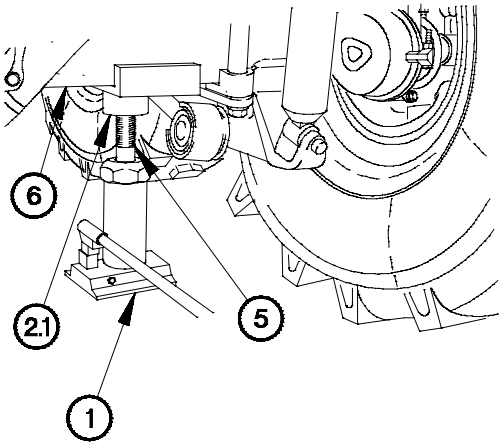

2C05B03B

NOTE

Perform steps (4) and (5) when removing rear tire.

(4) Position hydraulic jack (1) and jack adapter (2.1) under axle (6).

(5) Unscrew jack ram (5) until jack adapter (2.1) touches axle (6).

NOTE

- Both front and rear tires are removed the same way. Rear tire is shown.
- Air will not escape when CTIS hose is removed from hollow wheel stud.

(6) Remove banjo bolt (7), two washers (8), and CTIS hose (9) from hollow wheel stud (10).

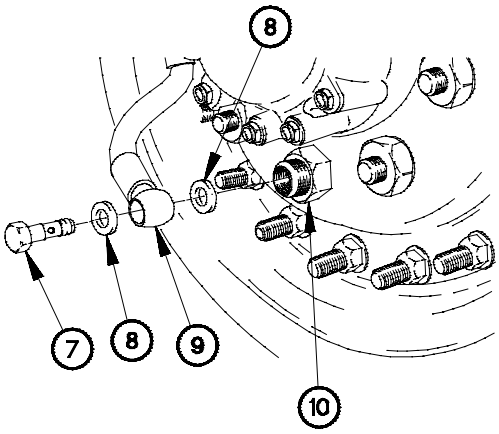

2C05B041

NOTE

- Studs and lugnuts on left side of vehicle have left-hand threads. Turn lugnuts to right to loosen, and to left to tighten.
- Studs and lugnuts on right side of vehicle have right-hand threads. Turn lugnuts to left to loosen, and to right to tighten.

(7) Loosen ten lugnuts (11).

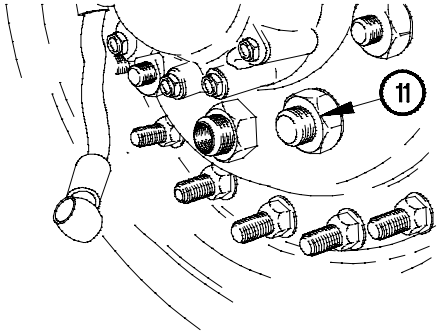

2C05B051

3-5. CHANGING TIRE (CONT)

NOTE

Both intermediate and rear axles are jacked up the same way. Rear axle is shown.

(8) Raise hydraulic jack (1) until tire (12) is off ground.

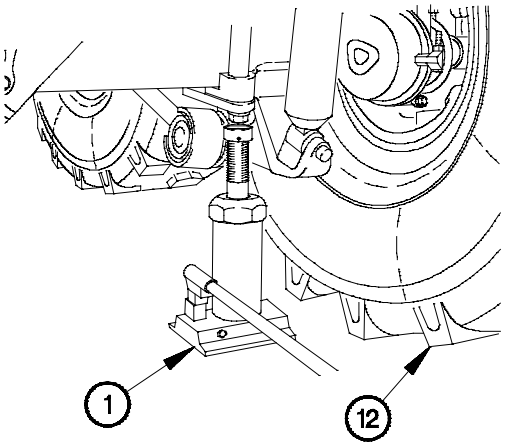

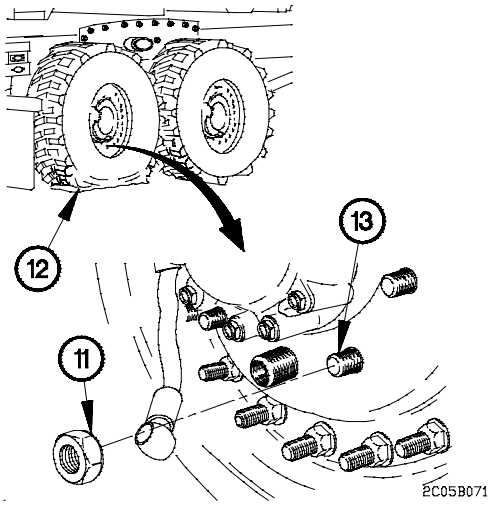

WARNING

Tire weighs approximately 350 lbs (159 kgs). Use extreme care when handling tire. Failure to comply may result in injury to personnel.

(9) Remove ten lugnuts (11) from studs (13).

CAUTION

Do not drag tire across studs during removal. Failure to comply may result in damage to equipment.

NOTE

Step (10) requires the aid of an assistant.

(10) Remove tire (12) from studs (13).

c. Tire Installation.

NOTE

- Steps (1) through (5) require the aid of an assistant.
- Both front and rear tires are installed the same way. Rear tire shown.

(1) Roll tire (1) up to hub (2).

(2) Align CTIS hose (3) with hollow wheel stud (4).

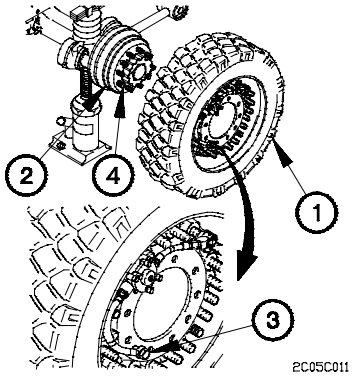

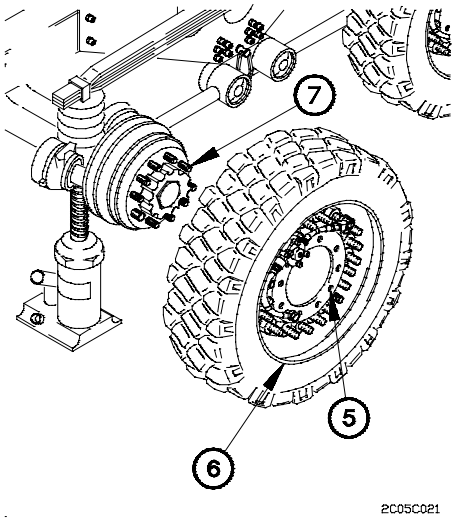

(3) Align ten holes (5) in wheel (6) with studs (7).

CAUTION

Do not drag tire across studs or crossthread lugnuts. Failure to comply may result in damage to equipment.

(4) Install wheel (6) on studs (7).

3-5. CHANGING TIRE (CONT)

WARNING

Notify Unit Maintenance that lugnuts must be tightened to 425-475 lb-ft (576-644 N•m) as soon as possible. Tire may come loose if lugnuts are not tightened to proper torque. Failure to comply may result in serious injury or death to personnel.

NOTE

- Studs and lugnuts on left side of vehicle have left-hand threads. Turn lugnuts to right to loosen, and to left to tighten.
- Studs and lugnuts on right side of vehicle have right-hand threads. Turn lugnuts to left to loosen, and to right to tighten.

(5) Install ten lugnuts (8) on studs (7) in sequence shown.

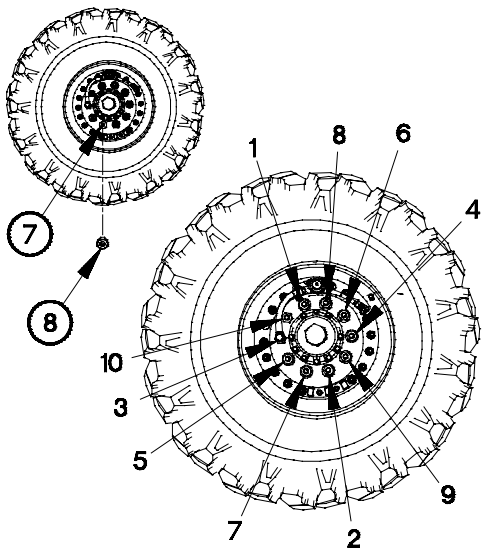

TIGHTENING SEQUENCE 2C05C031

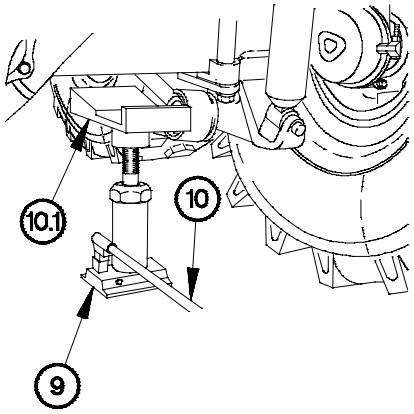

2C05C04B

(6) Lower vehicle to ground with hydraulic jack (9).

(7) Remove hydraulic jack (9), handle (10) and jack adapter (10.1) from vehicle.

(8) Stow hydraulic jack (9), handle (10) and jack adapter (10.1) in tool box.

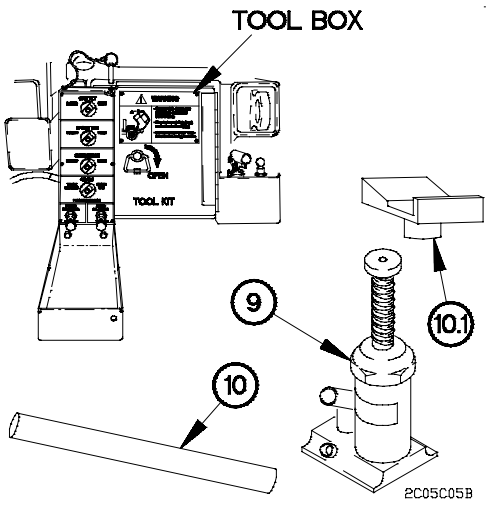

CAUTION

Do not overtighten banjo bolt when installing CTIS hose on hollow wheel stud. Failure to comply may result in damage to equipment.

(9) Install CTIS hose (3) on hollow wheel stud (4) with two washers (11) and banjo bolt (12).

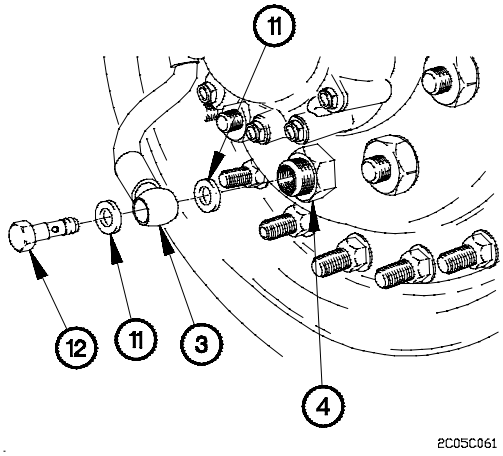

3-5. CHANGING TIRE (CONT)

d. Tire Stowage.

WARNING

- **Handle tire with care. Tire may have exposed broken metal cords or sharp debris in it. Failure to comply may result in injury to personnel.**
- **Tire weighs approxi-mately 350 lbs (159 kgs). Use care when handling tire. Failure to comply may result in injury to personnel.**

(1) Install bolt (1), two washers (2) and nut (3) in CTIS hose (4).

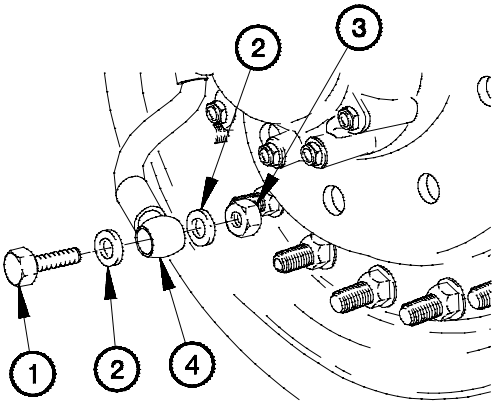

2C05D011

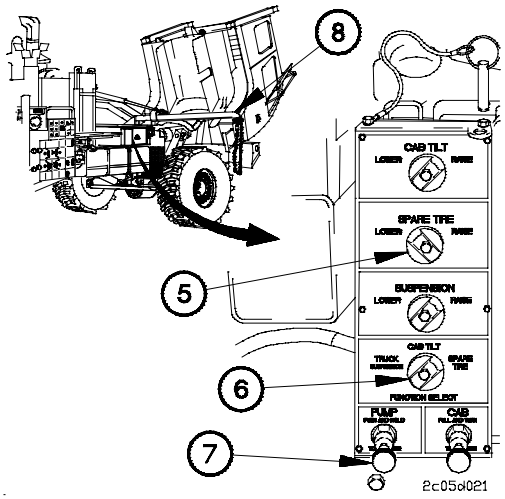

2c05d021

NOTE

Perform steps (2) through (5) for M1089 only.

(2) Raise cab (para 2-28a).

(3) Turn SPARE TIRE knob (5) to LOWER position.

(4) Turn FUNCTION SELECT knob (6) to the SPARE TIRE position.

(5) Press and hold PUMP knob (7) to lower spare tire lift arm (8).

(6) Roll flat tire (9) under center of spare tire retainer lift arm (8).

(7) Disconnect one end of chain (10) from spare tire retainer lift arm (8).

NOTE

- CTIS valve on tire must be positioned to the front of vehicle and at the six o'clock position.
- Tire should be straight up and down when installing chain through lug hole.

(8) Route chain (10) through uppermost lug hole (11) in wheel (12).

(9) Connect chain (10) to spare tire retainer lift arm (8).

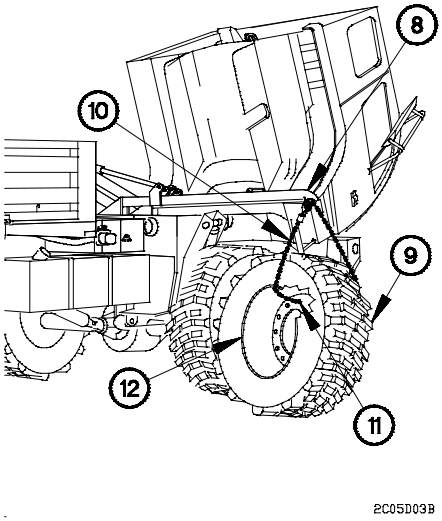

CAUTION

Use caution when raising tire to prevent damage to CTIS valve. Failure to comply may result in damage to equipment.

NOTE

Perform step (10) on all models except M1089.

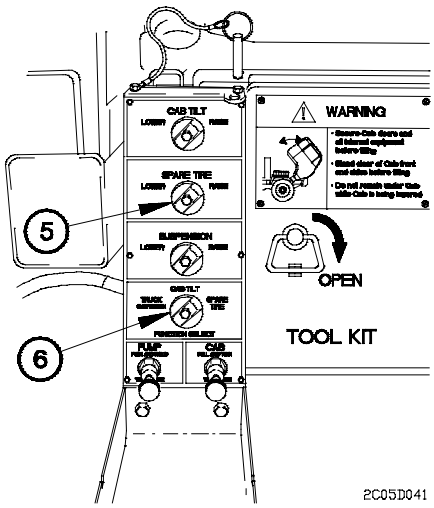

(10) Raise cab (para 2-28a).

(11) Turn SPARE TIRE knob (5) to the RAISE position.

(12) Turn FUNCTION SELECT knob (6) to the SPARE TIRE position.

3-5. CHANGING TIRE (CONT)

CAUTION

Tire must be stowed against back frame of spare tire retainer (for all models except Air Drop vehicles). Failure to comply may result in damage to equipment.

NOTE

Use back-up hydraulic pump (para 2-52) if pressing PUMP knob does not accomplish step (13).

(13) Press and hold PUMP knob (7) to raise spare tire retainer lift arm (8) to the stowed position.

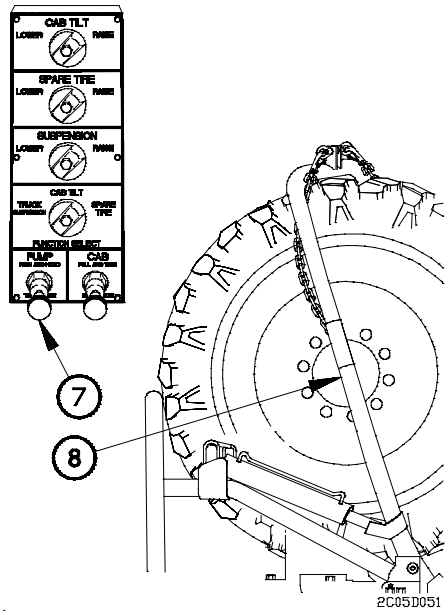

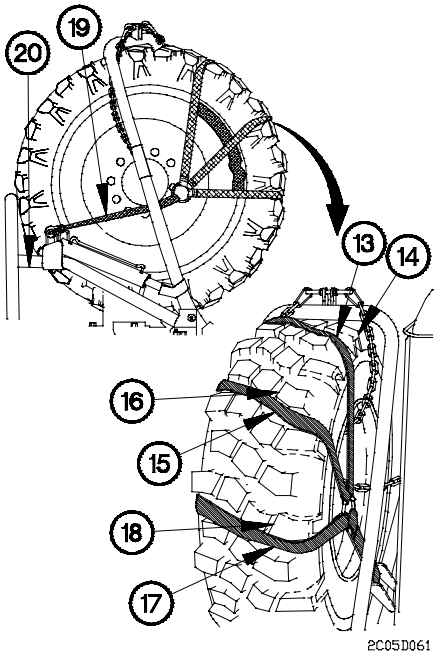

CAUTION

- Tread engagers must be in slots of tire treads. A loose strap will allow tire to move causing chafing of strap and possible loss of tire. Failure to comply may result in damage to equipment.
- Tread engagers must not be snug at installation for proper fit, but strap must have a tight fit. Failure to comply may result in damage to equipment.

(14) Position tread engager (13) in third tread (14), tread engager (15) in sixth tread (16), and tread engager (17) in ninth tread (18).

(15) Connect strap (19) to spare tire retainer (20).

(16) Feed other end of strap (19) through ratchet (21).

CAUTION

Ensure that strap is wrapped around ratchet at least three complete wraps after tightening. Failure to comply may result in damage to equipment.

(17) Tighten strap (19) around flat tire (9) with ratchet (21).

(18) Place ratchet handle (22) in down position.

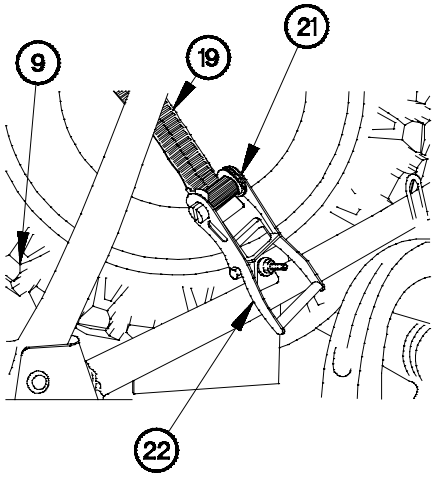

2C05D071

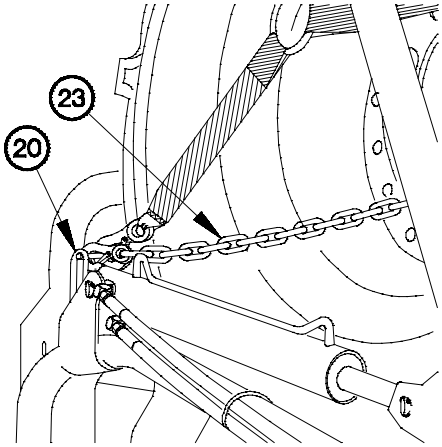

2C05D081

CAUTION

Ensure that safety chain is loose. If safety chain is tight then strap is not tight enough. Failure to comply may result in damage to equipment.

(19) Connect safety chain (23) to spare tire retainer (20).

3-5. CHANGING TIRE (CONT)

(20) Route other end of safety chain (23) through flat tire (9) and connect to spare tire retainer (20).

(21) Lower cab (para 2-28b).

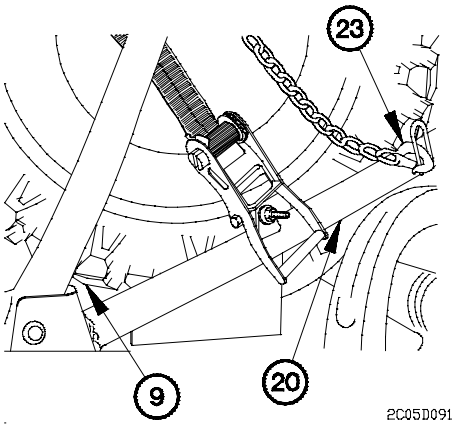

e. Follow-On Maintenance.

(1) Remove wheel chocks (para 2-27h).

(2) Notify Unit Maintenance that lugnuts need to be tightened to 425-475 lb-ft (576-644 N·m).

(3) Notify Unit Maintenance that flat tire needs to be repaired/replaced.

(4) Notify Unit Maintenance if flat tire was replaced on front of vehicle that kneeling valve must be installed.

(5) Notify Unit Maintenance that banjo bolts need to be tightened to 22-28 lb-ft (30-38 N·m).

End of Task.

3-6. SERVICING TIRES

This task covers:

a. Checking Tire Pressures

b. Manually Inflating Tires

INITIAL SETUP

Equipment Conditions
Engine shut down (para 2-27f).

Tools and Special Tools
Inflator-Gage, Tire W/Hose (Item 30, Appendix B)

Personnel Required
(2)

WARNING

Ensure tires have correct tire pressure for terrain conditions and driving speed (refer to Table 3-3 or Table 3-4). Failure to comply may result in serious injury or death to personnel.

a. Checking Tire Pressures.

Check tire pressures with tire inflator-gage.

Table 3-3. Cold Tire Inflation Pressures and Restrictions for M1083, M1084, M1085, M1086, M1090, M1092, M1093, M1094, and M1096 Models

Operating Mode	Maximum Vehicle Speed	Operating Time Restriction	Tire Pressure
Highway	55 mph (88 km/h)	NONE	60 psi (414 kPa)
Cross-Country	40 mph (64 km/h)	NONE	37 psi (255 kPa)
Sand	12 mph (19 km/h)	NONE	22 psi (152 kPa)
Emergency	5 mph (8 km/h)	10 MINUTES	16 psi (110 kPa)

3-6. SERVICING TIRES (CONT)

Table 3-4. Cold Tire Inflation Pressures and Restrictions for M1088 and M1089 Models

Operating Mode	Maximum Vehicle Speed	Operating Time Restriction	Tire Pressure
Highway	55 mph (88 km/h) (M1088) 40 mph (64 km/h) (M1089)	NONE	81 psi (558 kPa)
Cross-Country	40 mph (64 km/h)	NONE	54 psi (372 kPa)
Sand	12 mph (19 km/h)	NONE	32 psi (221 kPa)
Emergency	5 mph (8 km/h)	10 MINUTES	24 psi (165 kPa)

b. Manually Inflating Tires.

WARNING

Use caution when inflating tire. Overinflation may cause tire to blow apart. Failure to comply may result in serious injury or death to personnel or damage to equipment.

NOTE

- If CTIS is not working, tires may be inflated manually. Tires should be inflated when they are cool. Inflate to proper pressure for terrain conditions and driving speed. Refer to Tables 3-3 and 3-4.
- Gladhands at rear of vehicle are used to manually inflate tires.

(1) Remove tire inflator-gage w/hose (1) from TOOL KIT.

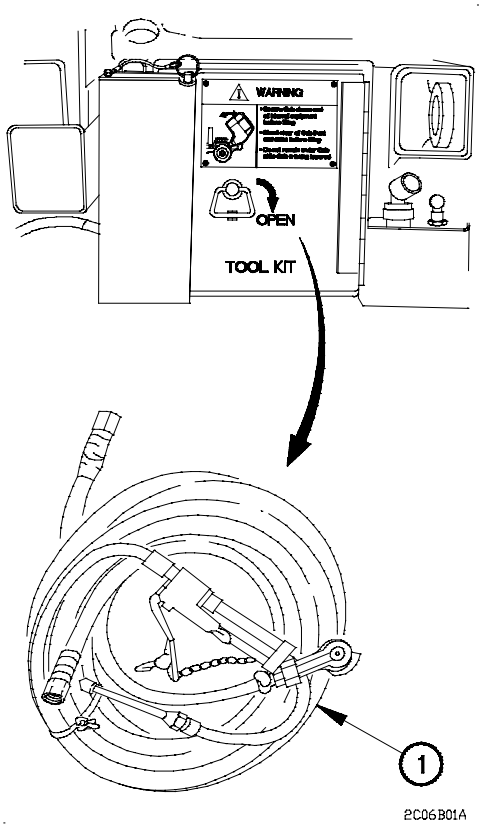

(2) Remove dummy coupling (2) from SERVICE or EMERGENCY gladhand (3) at rear of vehicle.

(3) Connect tire inflator-gage w/hose (1) to SERVICE or EMERGENCY gladhand (3).

(4) Start engine (para 2-27a or b).

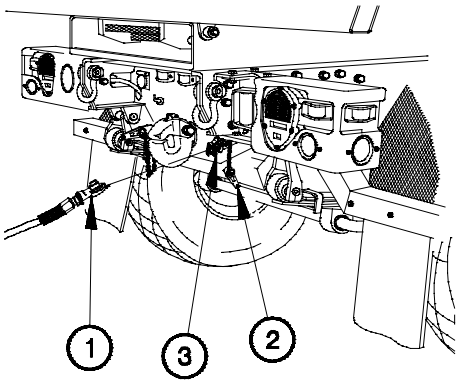

2C06B02A

WARNING

Wheels must be chocked and service brakes applied before SYSTEM PARK control is released. Vehicle may roll if wheels are not chocked. Failure to comply may result in serious injury or death to personnel.

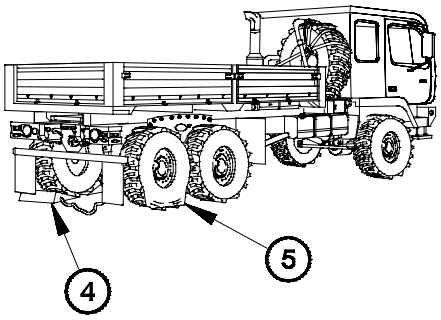

2C06B03A

(5) Install two wheel chocks (4) against tire across from tire (5) that is to be inflated.

3-6. SERVICING TIRES (CONT)

NOTE

Steps (6) through (17) require the aid of an assistant.

(6) Depress brake pedal (6).

(7) Push in SYSTEM PARK control (7).

(8) Push in TRAILER AIR SUPPLY control (8).

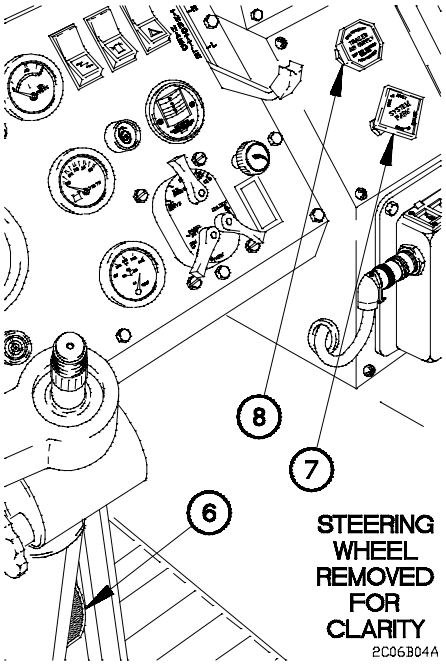

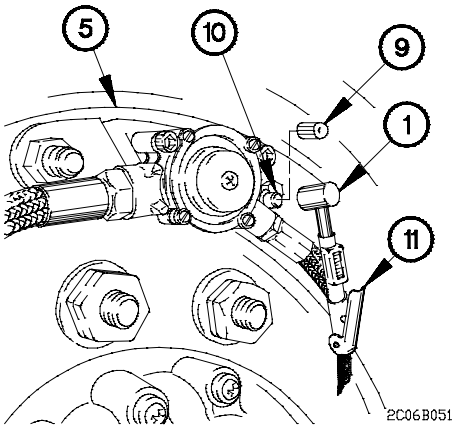

(9) Remove cap (9) from valve stem (10).

(10) Press chuck of tire inflator-gage (1) over valve stem (10) and squeeze handle (11).

(11) Add air to tire (5) as required by Table 3-3 or Table 3-4.

(12) Remove chuck of tire inflator-gage (1) from valve stem (10).

(13) Install cap (9) on valve stem (10).

(14) Pull out SYSTEM PARK control (7).

(15) Pull out TRAILER AIR SUPPLY control (8).

(16) Release brake pedal (6).

(17) Shut down engine (para 2-27f).

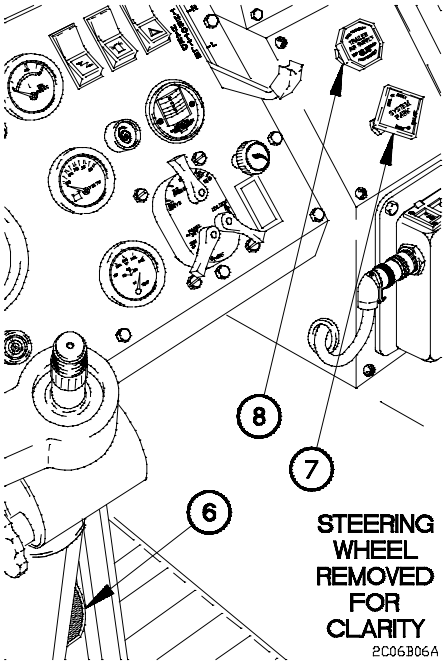

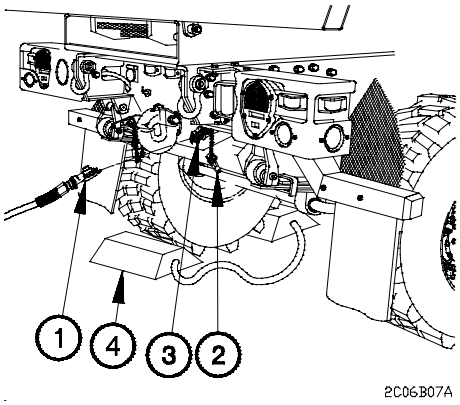

(18) Remove tire inflator-gage w/hose (1) from SERVICE or EMERGENCY gladhand (3).

(19) Install dummy coupling (2) on SERVICE or EMERGENCY gladhand (3).

(20) Remove two wheel chocks (4).

3-6. SERVICING TIRES (CONT)

(21) Stow tire inflator-gage w/hose (1) in TOOL KIT.

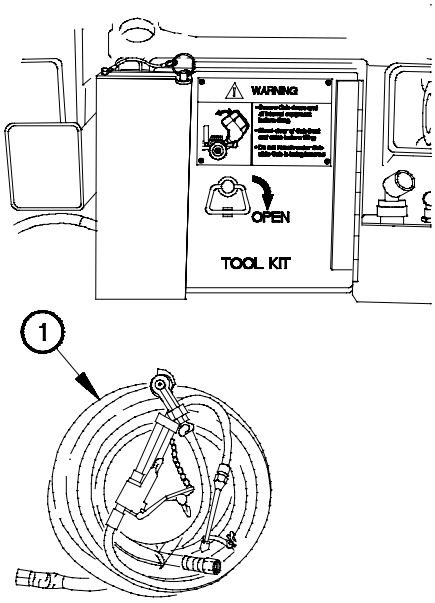

2C06B08A

End of Task.

3-7. CLEANING VEHICLE

This task covers:

a. Cleaning Exterior

b. Cleaning Interior

INITIAL SETUP

Equipment Condition
Wheels chocked (para 2-27h).

Materials/Parts
Rags, Wiping (Item 17, Appendix D)
Soap, Laundry (Item 18, Appendix D)
Solvent, Dry Cleaning (Item 19, Appendix D)

WARNING

- **All cleaning procedures must be accomplished in well-ventilated areas. Failure to comply may result in injury to personnel or damage to equipment.**
- **Protective gloves, clothing, and/or respiratory equipment must be worn whenever caustic, toxic, or flammable cleaning solutions are used. Failure to comply may result in injury to personnel or damage to equipment.**
- **Diesel fuel or gasoline must never be used for cleaning. Failure to comply may result in injury to personnel or damage to equipment.**
- **A fire extinguisher must be available and ready during all cleaning operations involving solvents. Failure to comply may result in injury to personnel or damage to equipment.**
- **Dry Cleaning Solvent (P-D-680) is TOXIC and flammable. Wear protective goggles and gloves; use only in well-ventilated area; avoid contact with skin, eyes, and clothes, and do not breath vapors. Keep away from heat or flame. Never smoke when using Dry Cleaning Solvent; the flashpoint for Type I Dry Cleaning Solvent is 100°F (38°C) and for Type II is 138°F (50°C). Failure to comply may result in serious injury or death to personnel.**
- **If personnel become dizzy while using Dry Cleaning Solvent, immediately get fresh air and medical help. If Dry Cleaning Solvent contacts skin or clothes, flush with cold water. If Dry Cleaning Solvent contacts eyes, immediately flush eyes with water and get medical attention. Failure to comply may result in serious injury or death to personnel.**

3-7. CLEANING VEHICLE (CONT)

CAUTION

- Do not wipe dirt off vehicle when it is dry. Dirt, stones, or debris may scratch and damage vehicle. Failure to comply may result in damage to equipment.
- Periodically wash the engine side of the fan clutch in the engine compartment. Fine particles of road debris may build-up in the fan clutch housing causing the fan clutch to drag and not fully release. Failure to comply may result in damage to equipment.
- Do not allow water to enter air filter inlet while washing vehicle. Air filter becomes restricted when wet and may cause a loss in engine power. Failure to comply may result in damage to equipment.
- Do not use high pressure water or steam on starting motor. When cleaning engine/transmission, starting motor must be protected from any high pressure water or steam. Failure to comply may result in damage to equipment.
- Do not direct high-pressure water stream at glass surfaces, seals, air intake, exhaust outlet, or any other component of vehicle that could be easily damaged by high-pressure water stream. Failure to comply may result in damage to equipment.
- Do not use high pressure water or steam to clean interior of vehicle. Failure to comply may result in damage to equipment.
- Do not use strong detergent or abrasive cleaners. Failure to comply result in damage to equipment.
- Do not allow cleaning compounds to come into contact with rubber, vinyl, or canvas materials. Failure to comply may result in damage to equipment.
- Do not allow corrosion-removing cleaning compounds to contact painted surfaces. Failure to comply may result in damage to equipment.
- Do not use compressed air in cleaning cab interior. Failure to comply may result in damage to equipment.
- Do not steam clean any part of vehicle that has been rustproofed. Failure to comply may result in damage to equipment.

CAUTION

- Mildew must be removed with a bristle brush before canvas can be properly cleaned and aired. Failure to comply may result in damage to equipment.

- The radiator is always cleaned first from behind with low pressure water or air, in order to blow debris, insects, or other obstructions away from the radiator core. Failure to comply may result in damage to equipment.

- The auxiliary transmission oil cooler is always cleaned first from the top with low pressure water or air to remove loose debris and dirt. Spray the bottom of the auxiliary transmission oil cooler with low pressure water to remove mud and debris from cooling fins. Do not use any type brush to remove mud. Failure to comply may result in damage to cooling fins and reduce cooling function of cooler.

NOTE

- Detailed description of specific cleaning compounds, Dry Cleaning Solvents, dry cleaning solutions, and corrosion-removing compounds are found in TM 9-247.

- Table 3-5 provides a general guideline to cleaning materials used in removing contaminants from various vehicle surfaces.

3-7. CLEANING VEHICLE (CONT)

Table 3-5. General Cleaning Instructions

Cleaning Materials Used to Remove			
Surface	**Oil/Grease**	**Salt/Mud/ Dust/Debris**	**Surface Rust/Corrosion**
Body	Grease-cleaning compound, running water, and damp or dry rags.	High pressure water, soapy warm water, soft brush, and damp or dry rags.	Corrosion-removing compound, bristle brush, dry rags, and lubricating oil.*
Cab Interior (Metals)	Grease cleaning compound and damp or dry rags.	Damp and dry rags.	Corrosion-removing compound, bristle brush, dry rags, and lubricating oil.*
Cab Interior (Material)	Saddle soap, warm water, soft brush, and dry rags.	Soft brush, soapy warm water, and damp or dry rags.	Not applicable.
Frame	Grease-cleaning compound rinsed with running water and rags.	High pressure water, soapy warm water, wire brush, and damp or dry rags.	Corrosion-removing compound, bristle brush, dry rags, and lubricating oil.*
Starting Motor	Mixed solution, 1 part grease-cleaning compound, 4 parts dry cleaning solvent, and rags.	Soapy warm water, soft wire brush, and damp or dry rags.	Bristle brush, warm soapy water, and dry rags.
Engine/ Transmission	Mixed solution, 1 part grease-cleaning compound, 4 parts dry cleaning solvent, and rags.	High pressure water, soapy warm water, soft wire brush, and damp or dry rags.	Bristle brush, warm soapy water, and dry rags.
Glass	Glass cleaning solution and clean dry rags.	Glass cleaning solution and clean, dry rags.	Not applicable.

* After cleaning, apply light grade of lubricating oil to all unprotected surfaces to prevent continued rust.

Table 3-5. General Cleaning Instructions (Cont)

Cleaning Materials Used to Remove			
Surface	**Oil/Grease**	**Salt/Mud/ Dust/Debris**	**Surface Rust/Corrosion**
Radiator/ Auxiliary Transmission Oil Cooler	Not applicable.	Low pressure water, air, soapy warm water, and damp or dry rags.	Not applicable.
Rubber Insulation	Damp or dry rags.	Damp or dry rags.	Not applicable.
Tires	Soapy water and bristle brush.	High pressure water and bristle brush.	Not applicable.
Cable	Cleaning compound and wire brush.	Wire brush.	Wire brush and lubricating oil.*
* After cleaning, apply light grade of lubricating oil to all unprotected surfaces to prevent continued rust.			

a. Cleaning Exterior.

Wash vehicle per table 3-5 General Cleaning Instructions.

b. Cleaning Interior.

CAUTION

Do not allow water to contact electrical controls, gages, or indicators. Failure to comply may result in damage to equipment.

(1) Remove loose dirt and dust from instrument panel (1) with damp wiping rag.

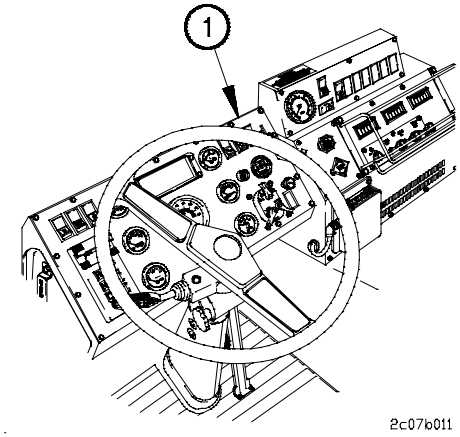

3-7. CLEANING VEHICLE (CONT)

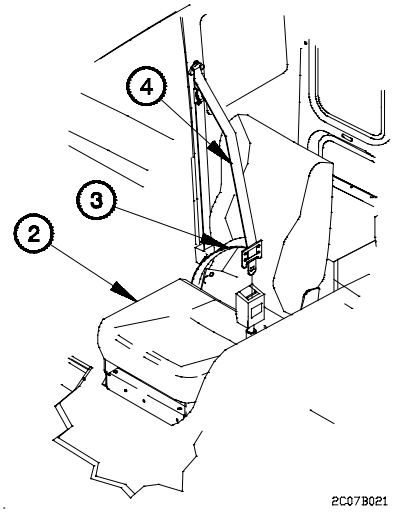

(2) Clean seat cushions (2), seat belts (3), and shoulder harnesses (4) with warm soapy water.

(3) Wipe seat cushions (2), seat belts (3), and shoulder harnesses (4) dry with wiping rags.

NOTE

Both left and right side drain plugs are removed/installed the same way. Left side is shown.

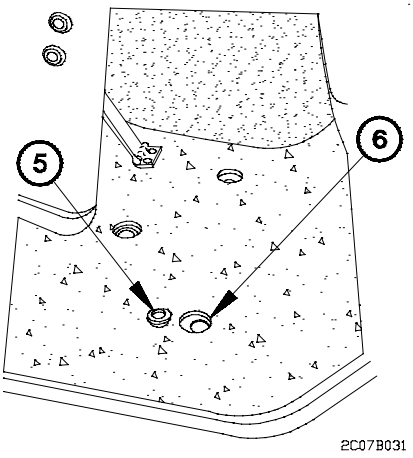

(4) Remove six drain plugs (5) from floor (6).

CAUTION

Do not use water to clean instrument panel area, especially under instrument panel. Failure to comply may result in damage to equipment.

(5) Using a low pressure hose, wash mud, sand, or dirt from floor (6).

(6) Wipe excess water from floor (6) with wiping rags.

(7) Install six drain plugs (5) in floor (6).

End of Task.

3-8. OPENING BATTERY BOX/TESTING BATTERIES

This task covers:

a. Opening Battery Box
b. Testing Batteries
c. Closing Battery Box

INITIAL SETUP

Equipment Conditions
Engine shut down (para 2-27f).

Materials/Parts
Rags, Wiping (Item 17, Appendix D)

a. Opening Battery Box.

(1) Lift two spring catches (1) and latch levers (2) from battery box (3).

(2) Release latches (4) from battery box cover (5).

(3) Remove battery box cover (5) from battery box (3).

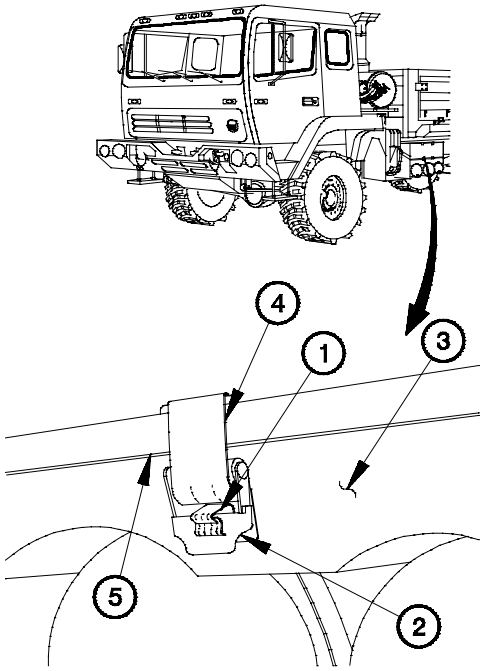

2C08A01A

3-8. OPENING BATTERY BOX/TESTING BATTERIES (CONT)

b. Testing Batteries.

(1) Start engine (para 2-27a or b).

(2) Shut down engine after idling for approximately four minutes (para 2-27f).

WARNING

- **Lead-acid battery gases can explode. Do not smoke, have open flames, or make sparks around a battery, especially if caps are off. Battery may give off gas which can explode. Failure to comply may result in serious injury or death to personnel.**
- **Remove rings, bracelets, wristwatches, neck chains, and other jewelry. Jewelry may catch on equipment or may short across an electrical circuit or battery terminal. Failure to comply may result in serious injury or death to personnel.**

(3) Remove battery tester (1) from clamp (2) on battery tray (3).

NOTE

If battery tester red light illuminates then battery tester is operational. If red light does not illuminate notify Unit Maintenance.

(4) Check operation of battery tester (1) by touching tip of battery tester (1) to positive battery post (4).

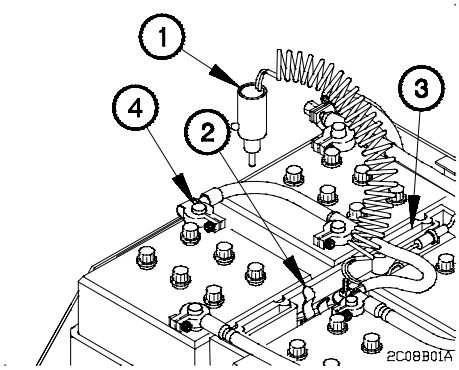

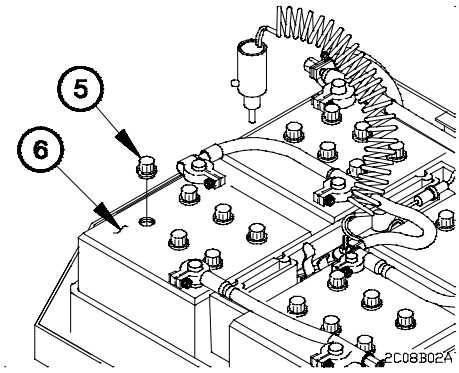

NOTE

All four batteries can be checked the same way. Check inside cells of inside batteries first, outside cells of outside batteries last. Left front battery shown.

(5) Remove battery fill caps (5) from battery (6).

NOTE

- If red light illuminates before inserting battery tester all the way in fill hole, battery may be overfilled.
- Red light may flash intermittently as battery tester is inserted in fill hole.
- With battery tester inserted fully in fill hole, red light will illuminate if electrolyte is at its proper level.
- With battery tester inserted fully into the fill hole adjacent to the negative battery posts of the outside batteries, the red light may illuminate briefly then go out, if the electrolyte is at proper level.
- If red light does not illuminate, or if cell is overfilled, notify Unit Maintenance that battery requires servicing.

(6) Place battery tester (1) in fill hole (7).

(7) Check battery tester (1) for red light.

(8) Remove battery tester (1) from fill hole (7).

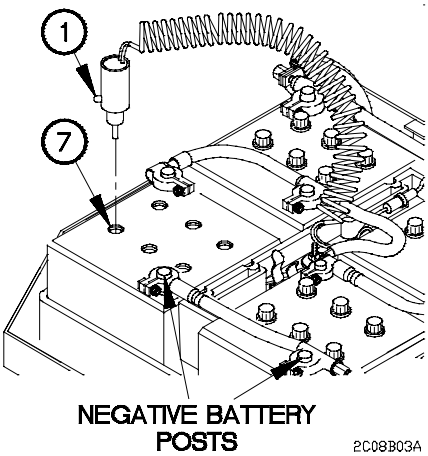

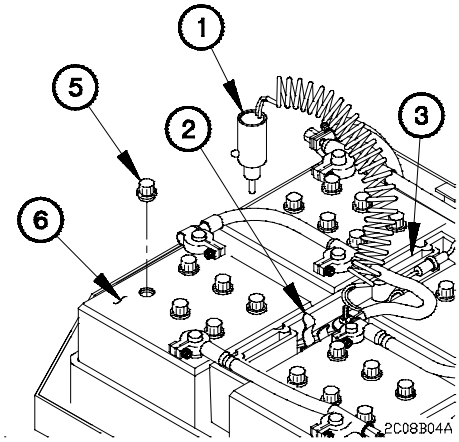

(9) Install battery fill caps (5) on battery (6).

(10) Wipe tip of battery tester (1) clean of any fluid with wiping rag.

(11) Install battery tester (1) in clamp (2) on battery tray (3).

3-8. OPENING BATTERY BOX/TESTING BATTERIES (CONT)

c. Closing Battery Box.

(1) Position battery box cover (1) on battery box (2).

(2) Fasten two latches (3) on battery box cover (1).

(3) Push down on two latch levers (4) until spring catches (5) are engaged.

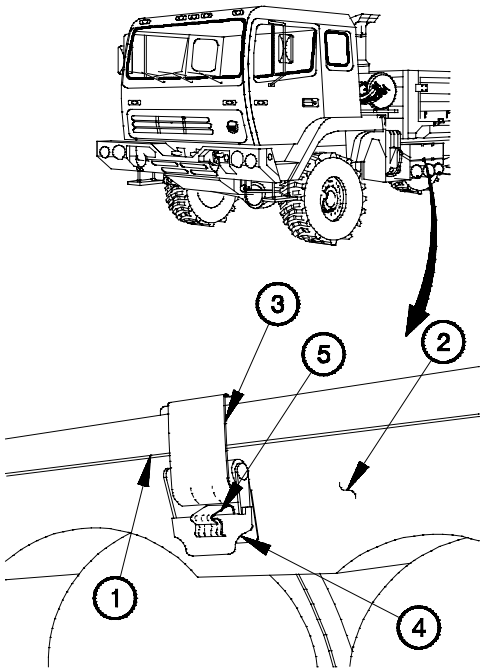

2C08C01A

End of Task.

3-9. SERVICING AIR FILTER (EMERGENCY PROCEDURE)

This task covers:

a. Servicing

b. Follow-On Maintenance

INITIAL SETUP

Equipment Conditions
Engine shut down (para 2-27f).
Wheels chocked (para 2-27h).

Materials/Parts
Rags, Wiping (Item 17, Appendix D)

a. Servicing.

WARNING

Nuclear, Biological, or Chemical (NBC) contaminated air filters must be handled and disposed of only by authorized and trained personnel. The unit commander or senior officer in charge of maintenance personnel must ensure that prescribed protective clothing (FM 3-4) is used, and prescribed safety measures and decontamination procedures (FM 3-5 and TB 700-4) are followed. The unit standard operating procedures are responsible for final disposal of contaminated air filters. Failure to comply may result in serious injury or death to personnel.

CAUTION

Do not operate engine without air filter installed. Failure to comply may result in damage to equipment.

NOTE

This is an emergency procedure and is only to be performed when AIR FILTER RESTRICTION GAUGE reads greater than 25 in. (64 cm) (in red area) while vehicle is on mission.

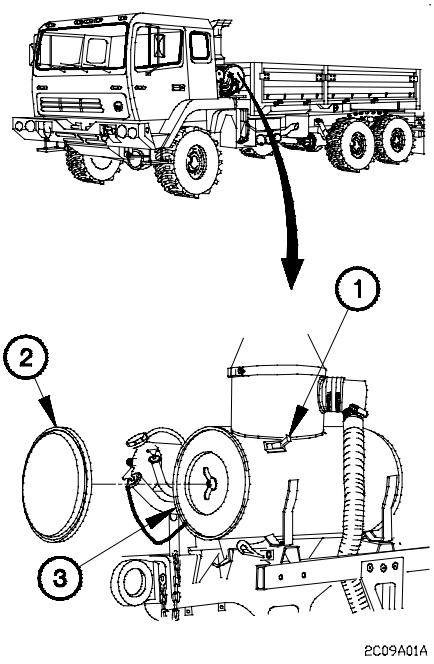

(1) Unlatch three clasps (1) on cover (2).

(2) Remove cover (2) from intake air cleaner housing (3).

3-9. SERVICING AIR FILTER (EMERGENCY PROCEDURE) (CONT)

(3) Loosen wingnut (4) and remove air filter (5) from intake air cleaner housing (3).

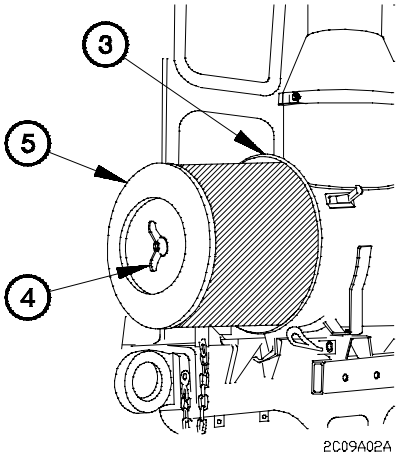

CAUTION

Use extreme care when cleaning air filter. Failure to comply may result in damage to equipment.

(4) Gently tap air filter (5) on a flat hard surface to loosen dirt.

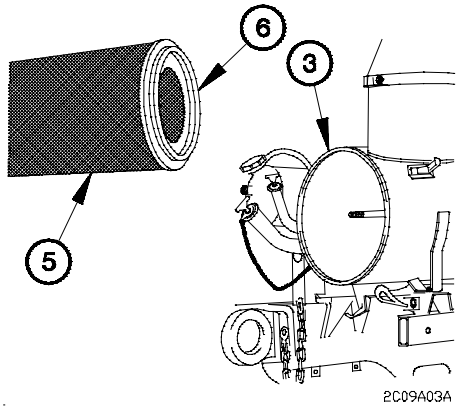

(5) Clean air filter (5) with clean wiping rag to free trapped dirt.

(6) Clean air filter gasket (6) with clean wiping rag.

(7) Clean inside of intake air cleaner housing (3) with clean wiping rag.

NOTE

The air filter is installed in intake air cleaner housing with gasket end first.

(8) Position air filter (5) in intake air cleaner housing (3).

(9) Tighten wingnut (4) on air filter (5).

(10) Position cover (2) on intake air cleaner housing (3).

(11) Latch three clasps (1).

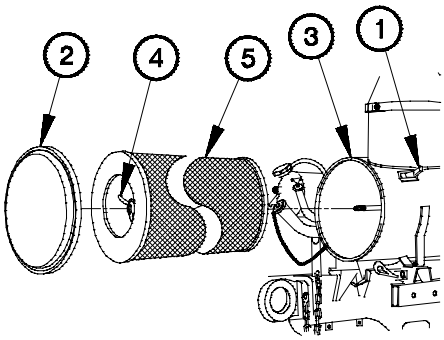

2C09A04A

b. Follow-On Maintenance.

Start engine (para 2-27a or b) and check AIR FILTER RESTRICTION GAUGE. Notify Unit Maintenance if AIR FILTER RESTRICTION GAUGE still reads greater than 25 in. (64 cm) (in red area).

End of Task.

3-10. M1093 AIR DROP PREPARATION

This task covers:

a. Spare Tire Stowage (Vehicles Not Equipped with Machine Gun Ring)
b. Spare Tire Stowage (Vehicles Equipped with Machine Gun Ring).
c. Cab Preparation
d. Spare Tire Retainer and Davit Preparation
e. Slide Assembly Installation
f. Load Spreader Installation
g. Follow-On Maintenance

INITIAL SETUP

Equipment Conditions
Vehicle parked on level ground.
Engine shut down (para 2-27f).
Wheels chocked (para 2-27h).
Spare tire removed (para 3-5a) (Vehicles not equipped with machine gun ring).
Side panels stowed (para 2-32k).

Tools and Special Tools
Wrench Assembly, Speedhandle (Item 24 (COEI), Appendix B)
Wrench, Adjustable, 8 in. (Item 50, Appendix B)

Tools and Special Tools
Strap Assembly (Item 23 (COEI), Appendix B)
Sling Assembly, Air Drop Roof (Item 22 (COEI), Appendix B)
Crane, Light Material Handling, Kit 1500 lb Capacity (Appendix C) (Vehicles equipped with machine gun ring)
Crane Adapter Kit (Appendix C) (Vehicles equipped with machine gun ring)

Personnel Required
(3)

a. Spare Tire Stowage (Vehicles Not Equipped With Machine Gun Ring).

NOTE

Steps (1) through (24) require the aid of an assistant.

(1) Unlatch three clamps (1) and remove davit (2) from rear panel (3).

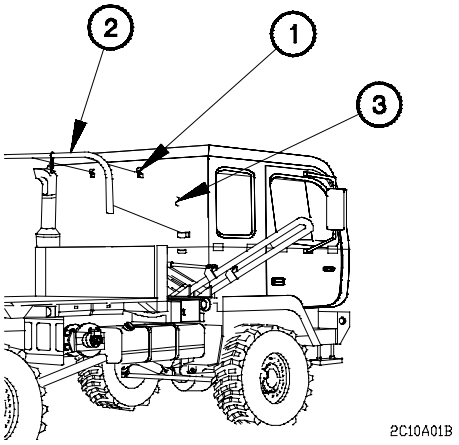

(2) Install davit (2) in sleeve (4) of spare tire retainer lift arm (5).

(3) Install safety washer (6) and lynch pin (7) in bottom of davit (2).

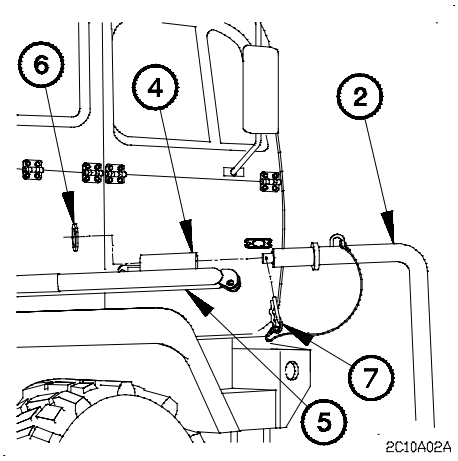

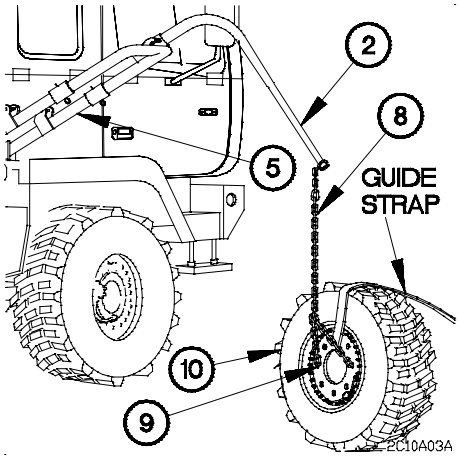

WARNING

Tire weighs approximately 350 lbs (159 kgs). Use extreme care when handling tire. Failure to comply may result in injury to personnel.

(4) Disconnect chain (8) from spare tire retainer lift arm (5).

(5) Install chain (8) through two wheel stud holes (9) then back to itself.

(6) Connect other end of chain (8) to davit (2).

(7) Attach guide strap to spare tire (10).

3-10. M1093 AIR DROP PREPARATION (CONT)

WARNING

Manifold operator must stand near hydraulic manifold and observe spare tire. Guide person must stand to the right front of vehicle, well clear of spare tire. Failure to comply may result in serious injury or death to personnel.

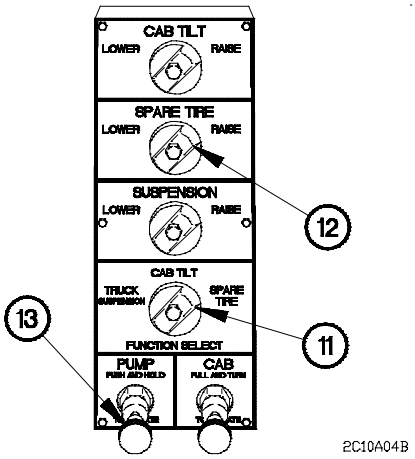

(8) Turn FUNCTION SELECT knob (11) to SPARE TIRE position.

(9) Turn SPARE TIRE knob (12) to RAISE position.

NOTE

Use back-up hydraulic pump (para 2-52) if pressing PUMP knob does not accomplish step (10).

(10) Press and hold PUMP knob (13).

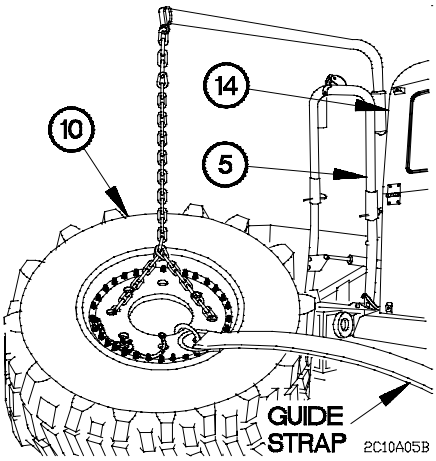

(11) Raise spare tire (10) until spare tire retainer lift arm (5) is aligned with right corner of cab (14).

(12) Attach chain (15) to hook (16) on spare tire retainer (17).

(13) Wrap other end of chain (15) around spare tire retainer lift arm (5) above hook (18) and hook chain back to itself.

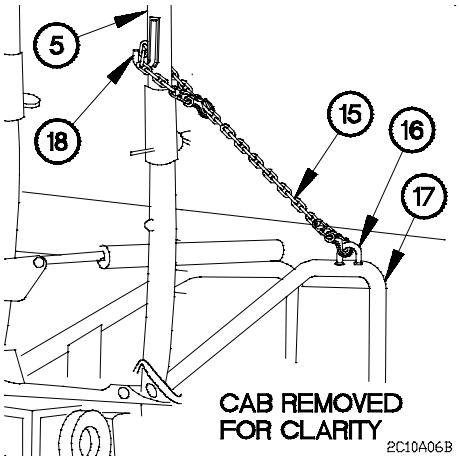

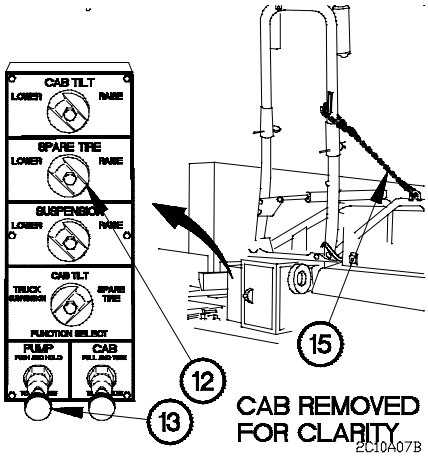

(14) Turn SPARE TIRE knob (12) to LOWER position.

NOTE

Use back-up hydraulic pump (para 2-52) if pressing PUMP knob does not accomplish step (15).

(15) Press and hold PUMP knob (13) until tension is on chain (15).

3-10. M1093 AIR DROP PREPARATION (CONT)

(16) Turn SPARE TIRE knob (12) mid-way between RAISE and LOWER to lock spare tire retainer lift arm (5) in place.

(17) Swing spare tire (10) over cargo bed (19).

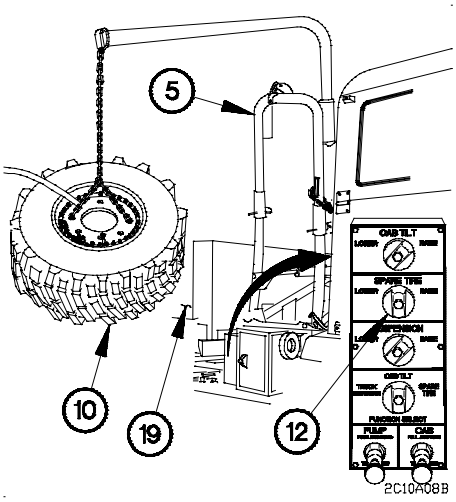

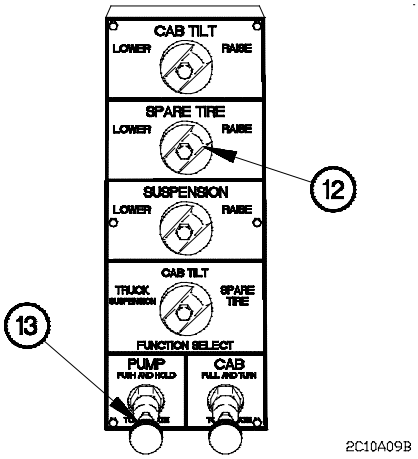

(18) Turn SPARE TIRE knob (12) to RAISE position.

NOTE

Use back-up hydraulic pump (para 2-52) if pressing PUMP knob does not accomplish step (19).

(19) Press and hold PUMP knob (13).

(20) Position spare tire (10) in the front center of cargo bed (19).

(21) Remove guide strap from spare tire (10).

(22) Disconnect chain (8) from davit (2).

(23) Disconnect chain (8) from spare tire (10).

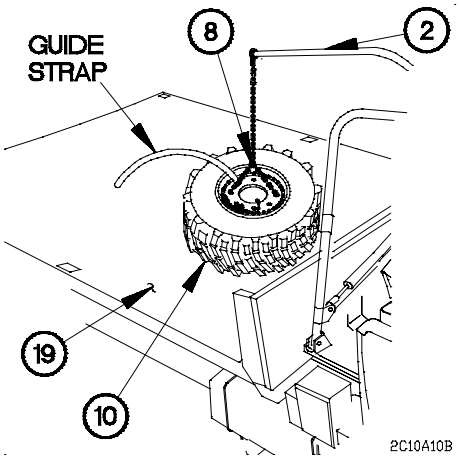

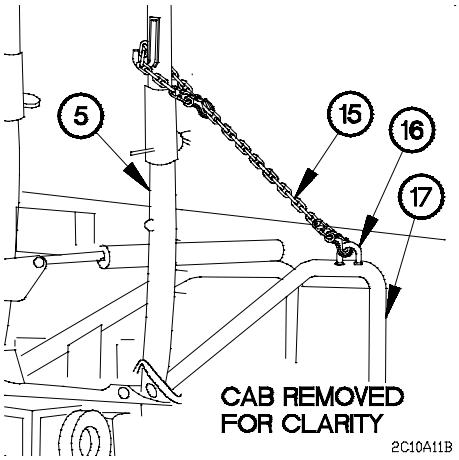

(24) Disconnect chain (15) from hook (16) on spare tire retainer (17).

(25) Disconnect other end of chain (15) from spare tire retainer lift arm (5).

3-10. M1093 AIR DROP PREPARATION (CONT)

b. Spare Tire Stowage (Vehicles Equipped With Machine Gun Ring).

NOTE

LMHC extension kit is installed in left front crane pocket.

(1) Remove pin (1) and plug (2) from crane pocket (3).

(2) Install crane extension (4) in crane pocket (3) with plug (2) and quick release pin (1).

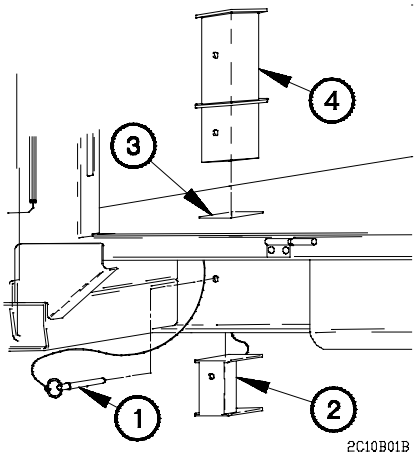

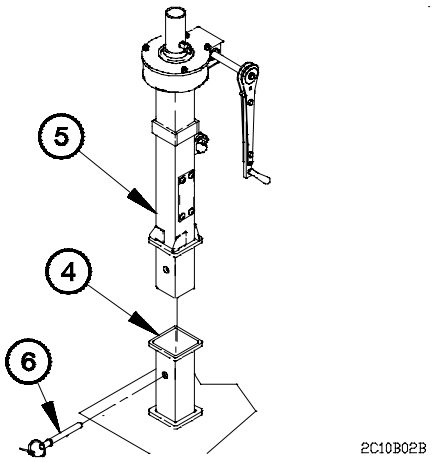

WARNING

Mast weighs approximately 100 lbs (45 kgs). The aid of an assistant is required to install mast on crane extension. Failure to comply may result in injury to personnel or damage to equipment.

(3) Install mast (5) in crane extension (4) with quick release pin (6).

(4) Position turret (7) on mast (5).

(5) Install quick release pin (8) in turret (7).

WARNING

Light Material Handling Crane (LMHC) boom and winch weighs approximately 110 lbs (50 kgs). The aid of an assistant is required to install LMHC boom and winch. Fai-lure to comply may result in injury to personnel or damage to equipment.

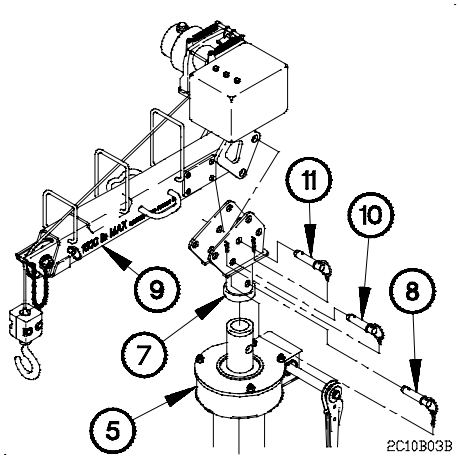

(6) Position LMHC boom (9) on turret (7).

(7) Install quick release pins (10 and 11) in turret (7).

(8) Set LMHC boom (9) to 25-degrees (para 2-29f).

(9) Extend LMHC boom (9) fully (para 2-29g).

(10) Connect remote control and power cable connectors (para 2-29d).

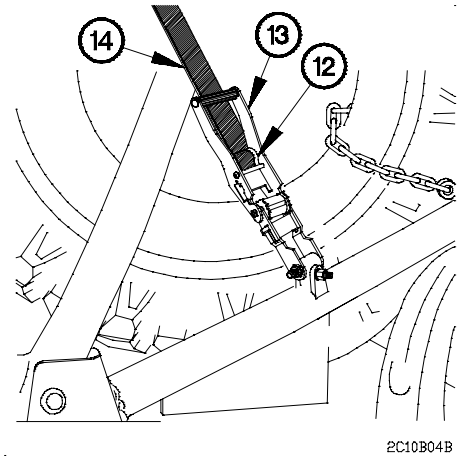

(11) Raise cab (para 2-28a).

(12) Release latch (12) on ratchet (13).

(13) Lift ratchet (13) and release strap (14).

(14) Remove strap (14) from ratchet (13).

3-10. M1093 AIR DROP PREPARATION (CONT)

(15) Disconnect safety chain (15) from spare tire retainer (16).

CAUTION

Ratchet must be in the close position before cab is lowered. Failure to comply may result in damage to equipment.

(16) Place ratchet (13) in close position.

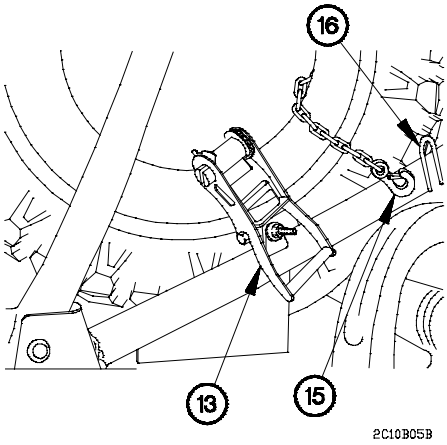

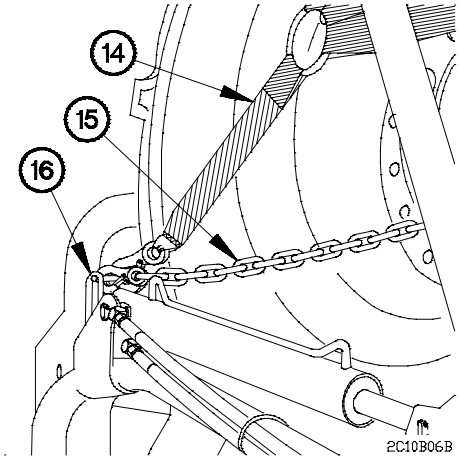

(17) Remove strap (14) and safety chain (15) from spare tire retainer (16).

(18) Lower cab (para 2-28b).

(19) Disconnect both ends of chain (17) from spare tire retainer lift arm (18).

(20) Pull chain (17) through spare tire (19).

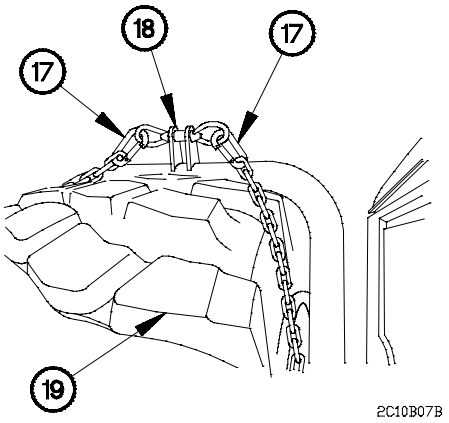

(21) Turn FUNCTION SELECT knob (20) to SPARE TIRE position.

(22) Turn SPARE TIRE knob (21) to LOWER position.

WARNING

Ensure spare tire retainer lift arm doesn't grab spare tire while being lowered. Failure to comply may result in injury to personnel or damage to equipment.

NOTE

Use back-up hydraulic pump (para 2-52) if pressing PUMP knob does not accomplish step (23).

(23) Press and hold PUMP knob (22) until spare tire retainer lift arm (18) is lowered.

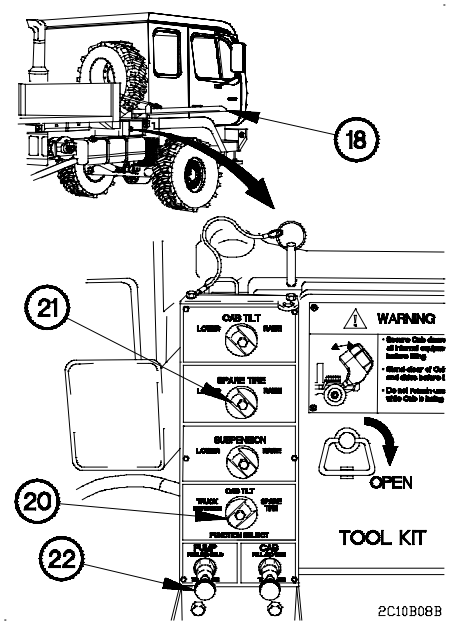

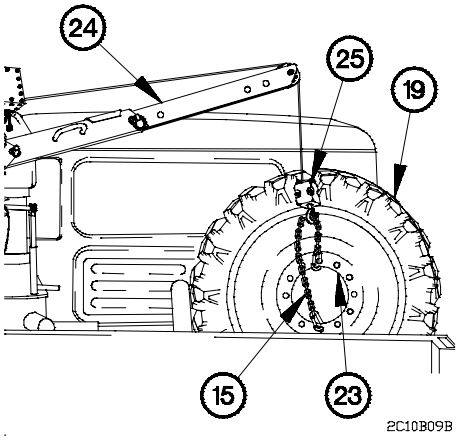

(24) Attach safety chain (15) to spare tire wheel hub (23) as shown.

(25) Position LMHC (24) over spare tire (19).

(26) Connect safety chain (15) to hook (25) on LMHC (24).

3-10. M1093 AIR DROP PREPARATION (CONT)

WARNING

Tire weighs approximately 350 lbs (159 kgs). Use extreme care when handling tire. Failure to comply may result in injury to personnel.

NOTE

Steps (27) through (29) require the aid of an assistant.

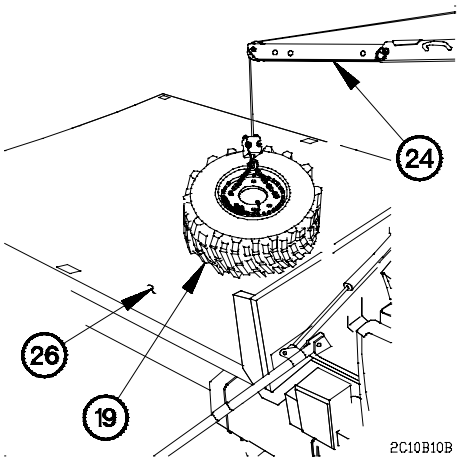

(27) Raise spare tire (19) with LMHC (24).

(28) Position spare tire (19) over center of cargo bed (26).

(29) Lower spare tire (19) on cargo bed (26).

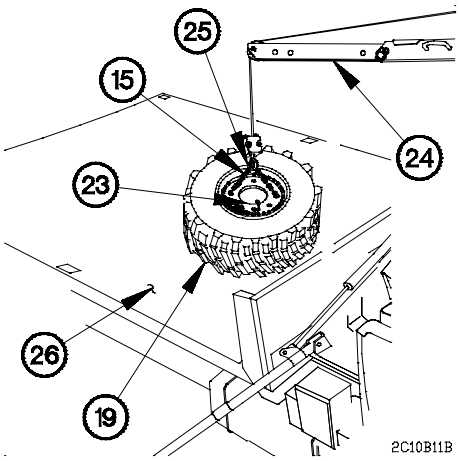

(30) Disconnect safety chain (15) from hook (25) on LMHC (24).

(31) Remove safety chain (15) from spare tire wheel hub (23).

NOTE

Step (32) requires the aid of an assistant.

(32) Position spare tire (19) in front center of cargo bed (26).

(33) Turn SPARE TIRE knob (21) to RAISE position.

(34) Press and hold PUMP knob (22) until spare tire retainer lift arm (18) is raised.

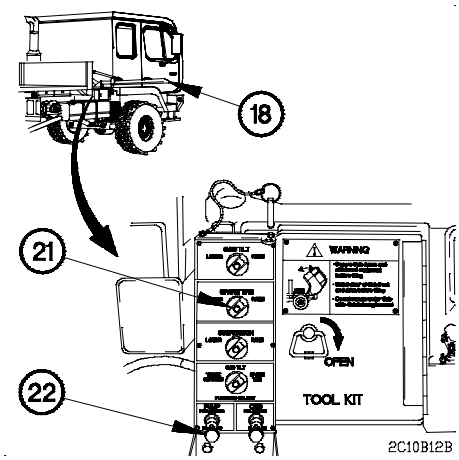

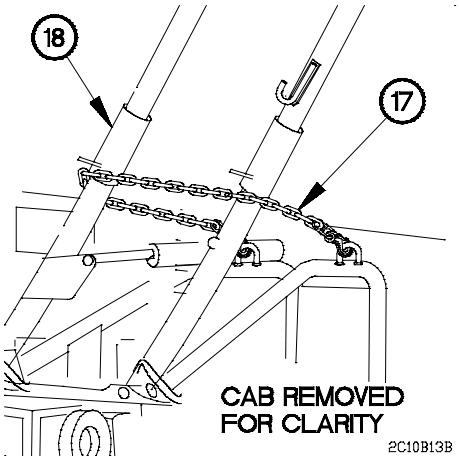

(35) Attach safety chain (17) to spare tire retainer lift arm (18).

3-10. M1093 AIR DROP PREPARATION (CONT)

c. Cab Preparation.

NOTE

- Stow all loose items before preparing cab.
- Both windshield wiper arms are removed the same way. Right side shown.

(1) Remove windshield washer tube (1) from windshield wiper arm (2).

(2) Remove nut (3), lockwasher (4), and windshield wiper arm (2) from vehicle.

(3) Stow two wiper arms (2), lockwashers (4), and nuts (3) in tool box.

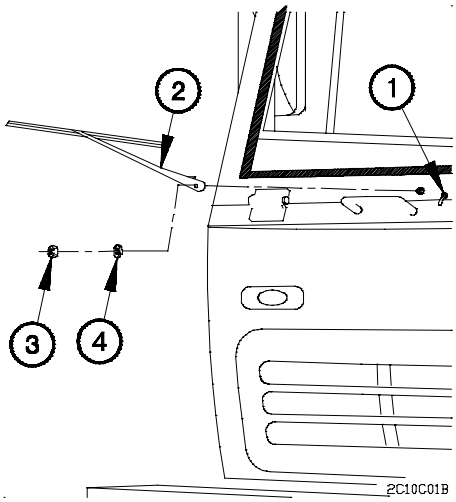

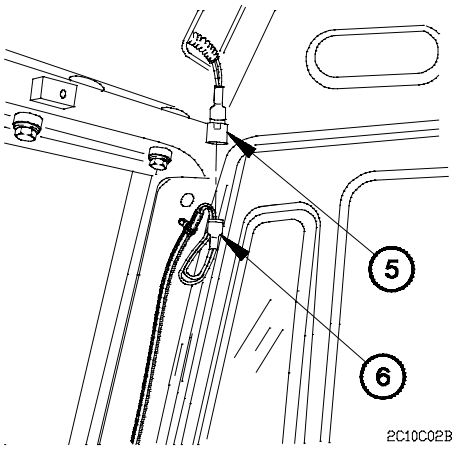

(4) Disconnect connector P3 (5) from connector J3 (6).

NOTE

It is necessary to pull down on captive bolt, after loosening, to lock it in place.

(5) Loosen four captive bolts (7) from left side panel (8).

(6) Pull down on four captive bolts (7) to lock in place.

(7) Loosen ten captive bolts (9) from rear panel (10).

(8) Pull down on ten captive bolts (9) to lock in place.

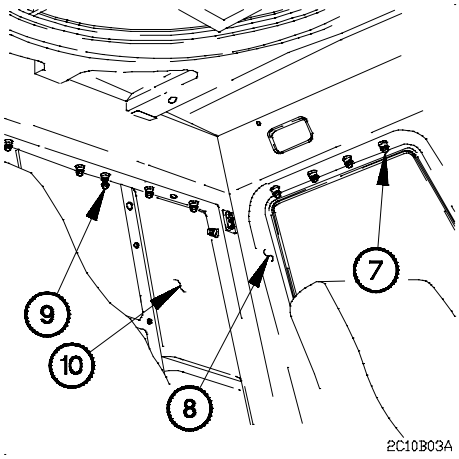

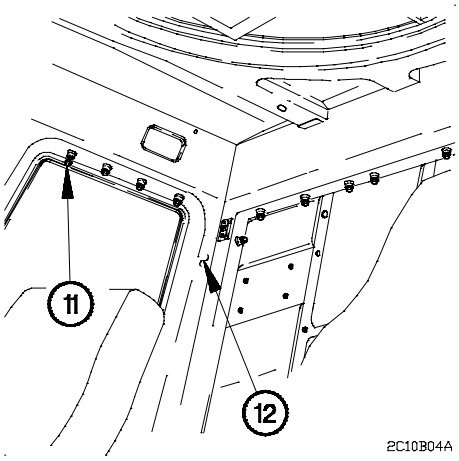

(9) Loosen four captive bolts (11) from right side panel (12).

(10) Pull down on four captive bolts (11) to lock in place.

3-10. M1093 AIR DROP PREPARATION (CONT)

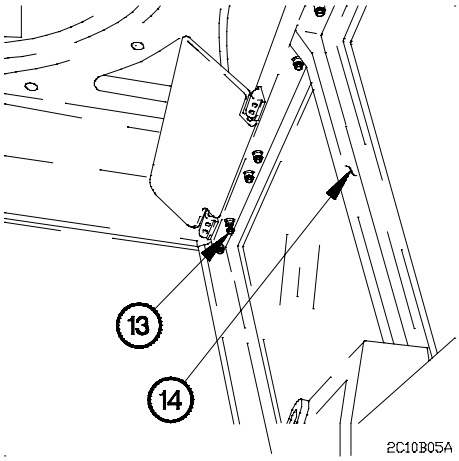

(11) Loosen ten captive bolts (13) from windshield (14).

(12) Pull down on ten captive bolts (13) to lock in place.

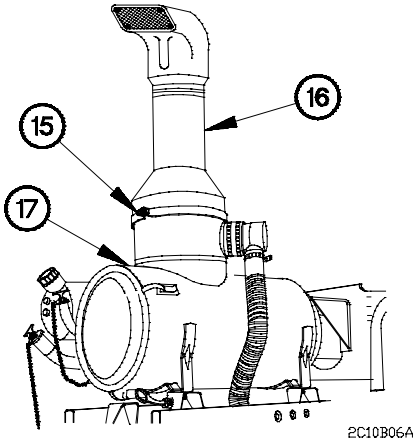

(13) Loosen clamp (15) and remove air intake adapter (16) from intake air cleaner housing (17).

NOTE

- Steps (14) through (25) require the aid of an assistant.
- Perform steps (14) through (25) on cab roofs not equipped with machine gun ring.

(14) Position davit (18) over center of cab roof (19).

(15) Install lifting strap (20) on four brackets (21).

(16) Attach lifting strap (20) to davit (18).

(17) Turn SPARE TIRE knob (22) to LOWER position.

NOTE

Use back-up hydraulic pump (para 2-52) if pressing PUMP knob does not accomplish step (18).

(18) Press and hold PUMP knob (23).

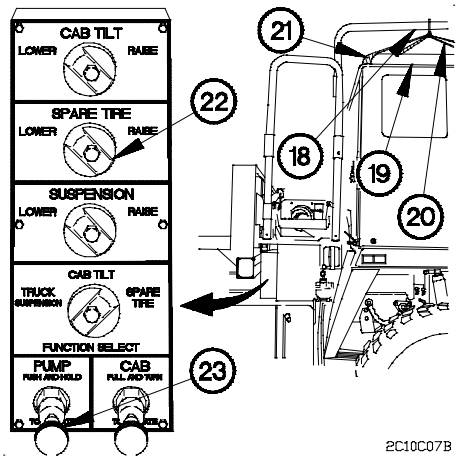

NOTE

It may be necessary to push up on cab roof, from inside cab, to help loosen cab roof from cab.

(19) Raise spare tire retainer lift arm (24) until cab roof (19) is clear of windshield (14), right side panel (12), left side panel (8), and rear panel (10).

(20) Swing cab roof (19) around so cab roof is over cargo bed (25).

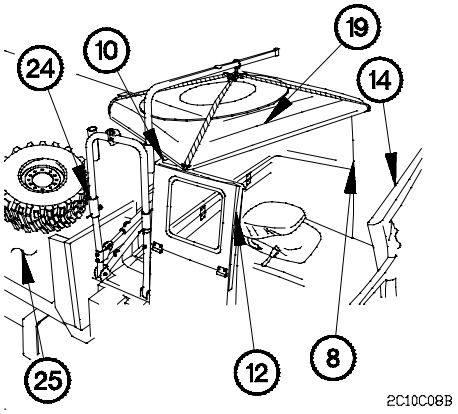

3-10. M1093 AIR DROP PREPARATION (CONT)

(21) Lower spare tire retainer lift arm (24) until cab roof (19) sits on front side of cargo bed (25) and spare tire (26).

(22) Remove lifting strap (20) from davit (18).

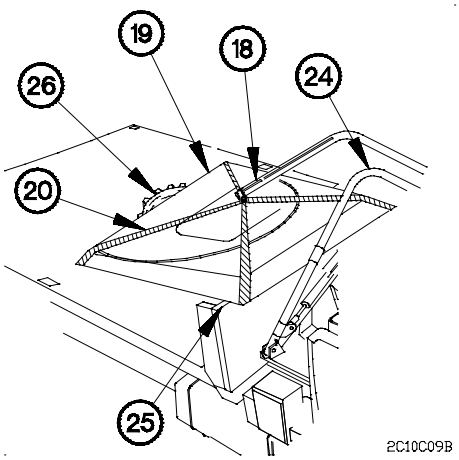

WARNING

Cab roof weighs approximately 110 lbs (50 kgs). Use care when handling cab roof. Failure to comply may result in injury to personnel or damage to equipment.

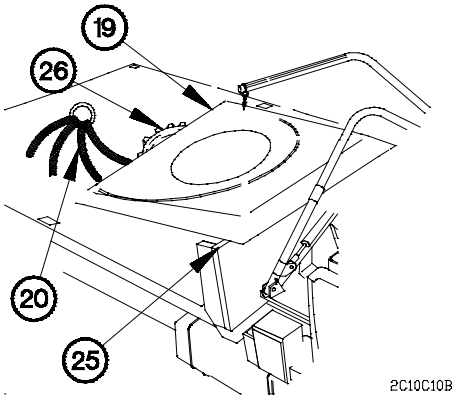

(23) Lift cab roof (19) from front side of cargo bed (25) and edge of spare tire (26).

(24) Position cab roof (19) over center of spare tire (26).

(25) Remove lifting strap (20) from cab roof (19).

NOTE

Perform steps (26) through (49) on cab roofs equipped with machine gun ring.

(26) Position LMHC hook (27) over center of cab roof (19).

(27) Install y-adapter (28) on machine gun ring (29).

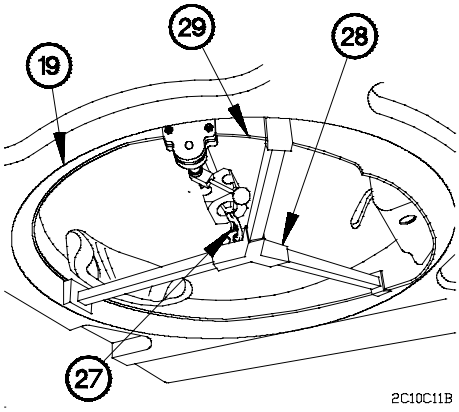

CAUTION

Hook must be installed on hole closest to the front of cab roof. Rotate machine gun ring until hole is facing towards front of vehicle. Failure to comply may result in damage to equipment.

(28) Install LMHC hook (27) to y-adapter (28).

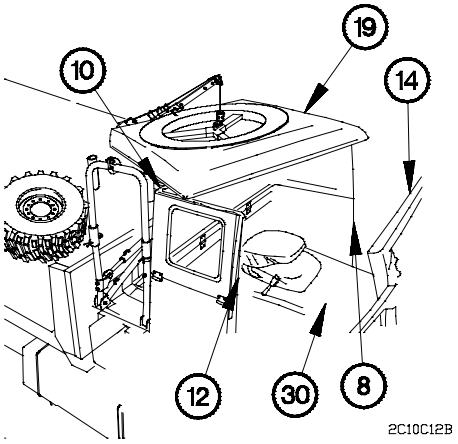

WARNING

Cab roof and machine gun ring weigh approximately 500 lbs (227 kgs). The aid of two assistants is required to remove the cab roof and machine gun ring. Failure to comply may result in injury to personnel or damage to equipment.

NOTE

If may be necessary to push up on cab roof, from inside cab, to help loosen cab roof from cab.

(29) Lift cab roof (19) from cab (30) until cab roof is clear of windshield (14), right side panel (12), left side panel (8), and rear panel (10).

3-10. M1093 AIR DROP PREPARATION (CONT)

(30) Swing cab roof (19) around so cab roof is over cargo bed (25).

(31) Lower cab roof (19) until cab roof sits on cargo bed (25) and spare tire (26).

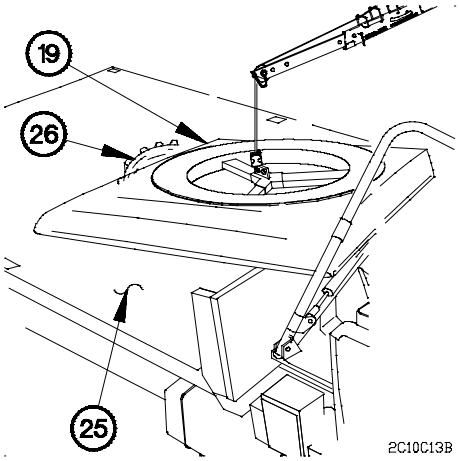

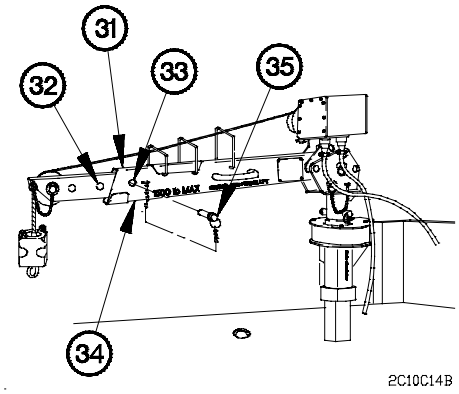

(32) Retract LMHC boom (31) until the second hole (32) on the LMHC boom is aligned with the hole (33) on the boom (34).

(33) Install quick release pin (35) in hole (33).

(34) Lift cab roof (19) over center of spare tire (26).

(35) Position cab roof (19) over center of spare tire (26).

(36) Lower cab roof (19) on spare tire (26).

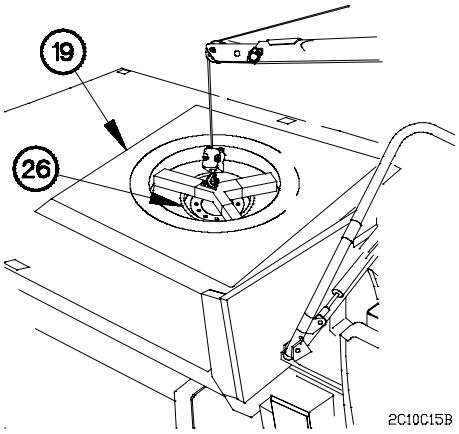

(37) Remove LMHC hook (27) from y-adapter (28).

(38) Position LMHC hook (27) away from cab roof (19).

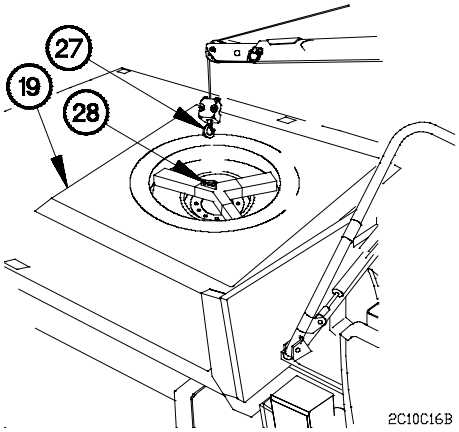

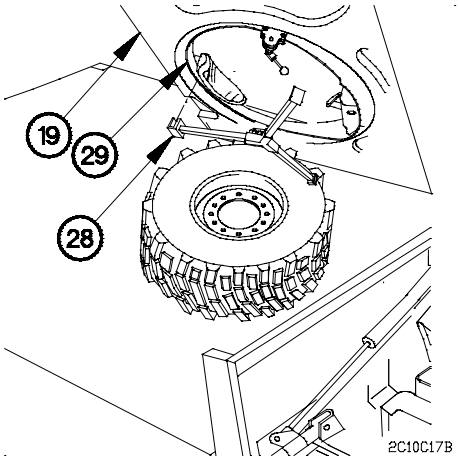

NOTE

- Steps (39) and (40) require the aid of two assistants.
- Lift edges of cab roof until y-adapter can be removed.

(39) Lift front and rear of cab roof (19).

(40) Remove y-adapter (28) from machine gun ring (29).

(41) Disconnect remote control and power cable connectors (para 2-29d).

(42) Lower boom (34) to 0-degrees (para 2-29f).

(43) Remove quick release pins (36 and 37) from turret (38).

WARNING

LMHC boom and winch weighs approximately 100 lbs (45 kgs). The aid of an assistant is required to remove LMHC boom and winch. Failure to comply may result in injury to personnel or damage to equipment.

(44) Remove boom (34) from turret (38).

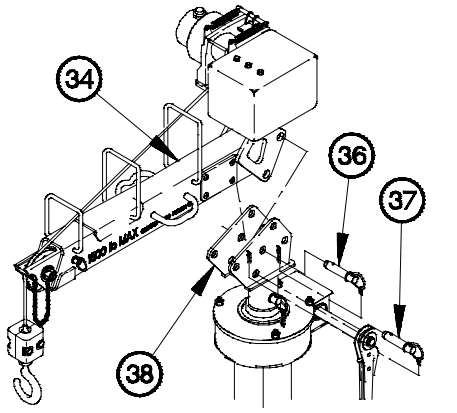

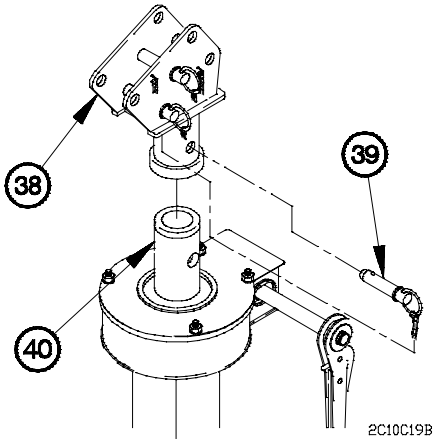

(45) Remove quick release pin (39) from turret (38).

(46) Remove turret (38) from mast (40).

3-10. M1093 AIR DROP PREPARATION (CONT)

(47) Remove quick release pin (41) and mast (40) from LMHC extension (42).

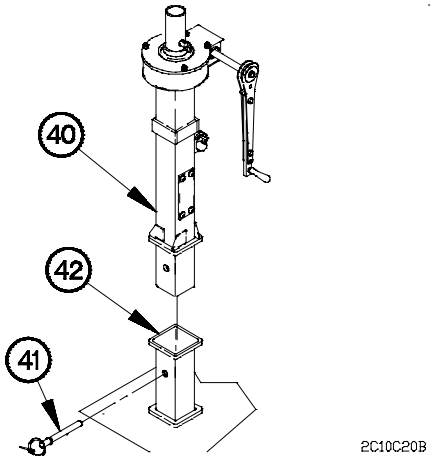

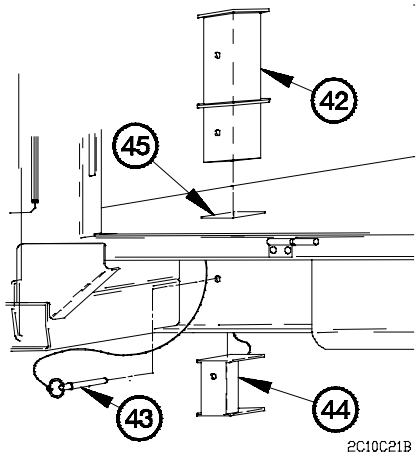

(48) Remove quick release pin (43), plug (44), and LMHC extension (42) from crane pocket (45).

(49) Install plug (44) in crane pocket (45) with quick release pin (43).

NOTE

Left and right side mirrors are folded the same way. Right side shown.

(50) Roll window (46) completely down.

(51) Remove nut (47), two washers (48), and screw (49) from mirror support (50).

(52) Remove clip (51) from mirror support (50).

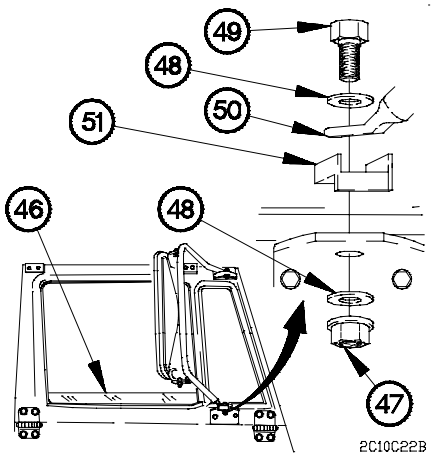

(53) Fold mirror (52) in door window opening.

NOTE

Stow clip in position shown on mirror support.

(54) Install screw (49), two washers (48), clip (51), and nut (47) on mirror support (50).

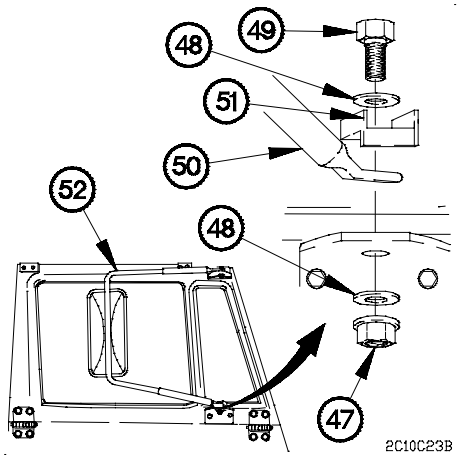

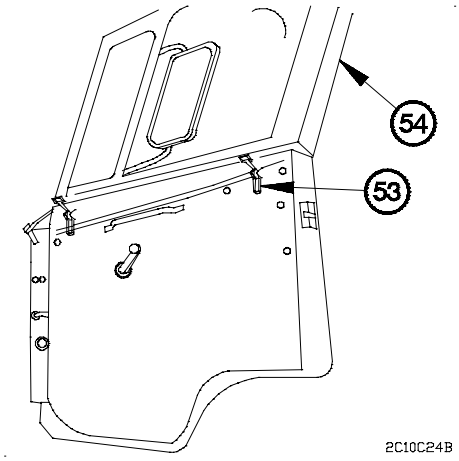

NOTE

Left and right side doors are lowered the same way. Right side shown.

(55) Release door latches (53) on doors (54) and lower top half of door out and lock in place.

NOTE

Left and right side rear panels are lowered the same way. Left side shown.

(56) Loosen captive bolt (55) from left side of rear panel (10).

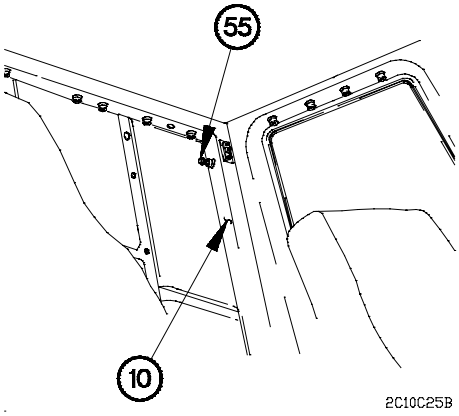

3-10. M1093 AIR DROP PREPARATION (CONT)

NOTE

Left and right side panels are released the same way. Left side shown.

(57) Release three side panel latches (56) on side panel (8) on inside of cab (57).

(58) Release two side panel latches (58) on outside of cab (57).

(59) Lower top half of side panel (8) outward and lock in place.

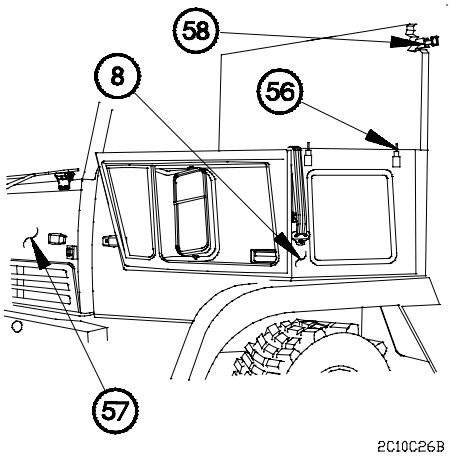

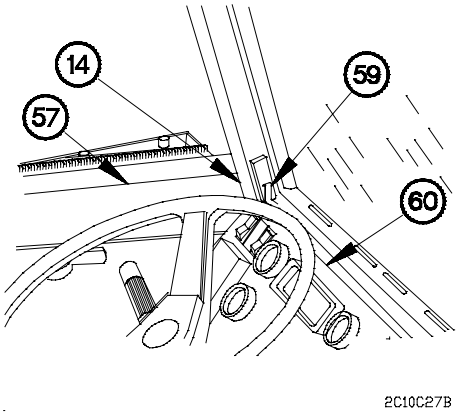

(60) Release two windshield latches (59) above dashboard (60) on inside of cab (57).

CAUTION

Use care when working around windshield and door glass. Failure to comply may result in damage to equipment.

(61) Lower windshield (14) outward and lock in place.

(62) Release five rear panel latches (61) on outside of cab (57).

(63) Fold down three seats (62).

(64) Lower rear panel (10) forward in cab (57).

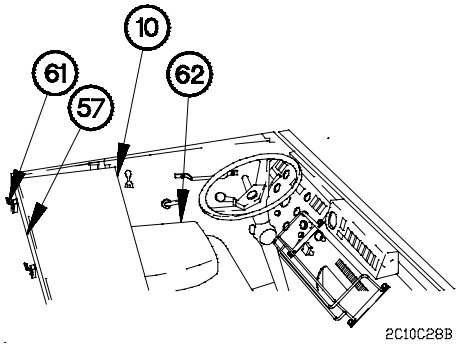

d. Spare Tire Retainer and Davit Preparation.

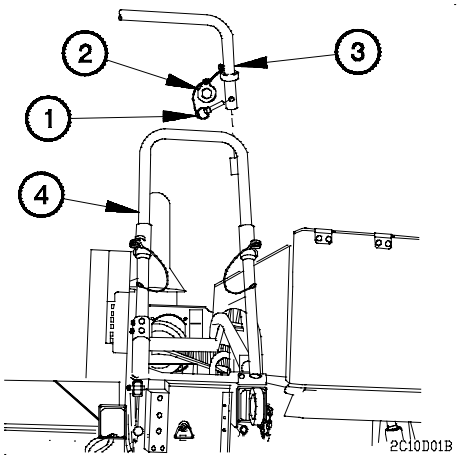

NOTE

- Steps (1) through (6) require the aid of an assistant.
- Perform steps (1) through (3) on cab roofs not equipped with machine gun ring.

(1) Disconnect safety pin (1) and safety washer (2) from davit (3).

(2) Remove davit (3) from spare tire retainer lift arm (4).

(3) Connect safety washer (2) and safety pin (1) on davit (3).

3-10. M1093 AIR DROP PREPARATION (CONT)

NOTE

Perform step (3.1) on cab roofs equipped with machine gun ring.

(3.1) Unlatch three clamps (4.1) and remove davit (3) from rear panel (4.2).

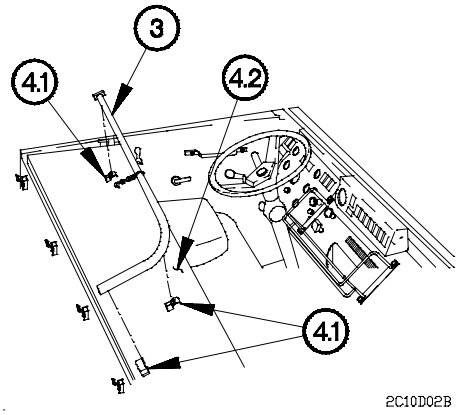

NOTE

Air drop personnel will secure spare tire, cab top, and davit with rigging prior to air drop.

(4) Stow davit (3) with spare tire (5) and cab roof (6).

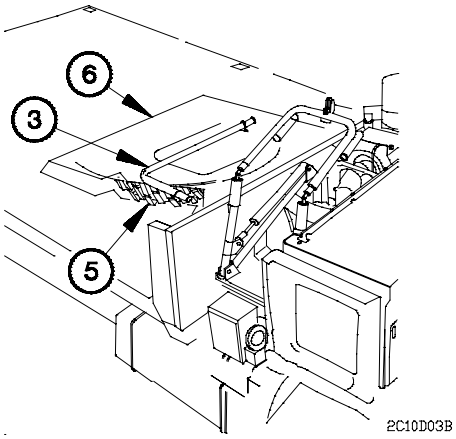

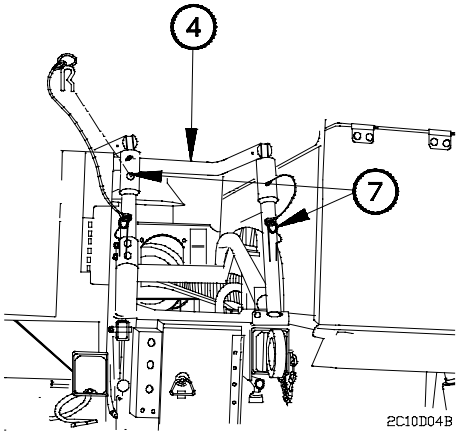

(5) Remove two safety pins (7) from spare tire retainer lift arm (4).

(6) Lower spare tire retainer lift arm (4) to stowage position and secure to vehicle.

3-10. M1093 AIR DROP PREPARATION (CONT)

e. Slide Assembly Installation.

NOTE

Steps (1) through (11) require the aid of an assistant.

(1) Remove wing nut (1) and retaining bar (2) from cover plate assembly (3).

(2) Remove cover plate assembly (3) from slide assembly receptacle (4).

(3) Assemble retaining bar (2) and wing nut (1) on threaded rod of cover plate assembly (3). Stow in tool box.

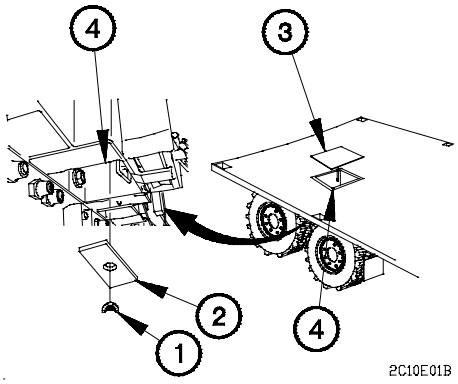

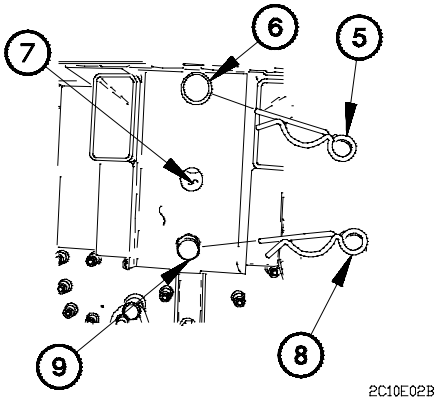

(4) Remove safety pin (5) from large pin (6) of slide assembly (7).

(5) Remove safety pin (8) from small pin (9) of slide assembly (7).

(6) Remove small pin (9) from slide assembly (7).

(7) Remove large pin (6) while holding slide assembly (7).

(8) Align small hole of slide assembly (7) with middle hole of slide assembly receptacle (4).

(9) Install small pin (9) in slide assembly (7) and slide assembly receptacle (4).

(10) Install large pin (6) in slide assembly (7) and slide assembly receptacle (4).

(11) Install two safety pins (5 and 8) in pins (6 and 9).

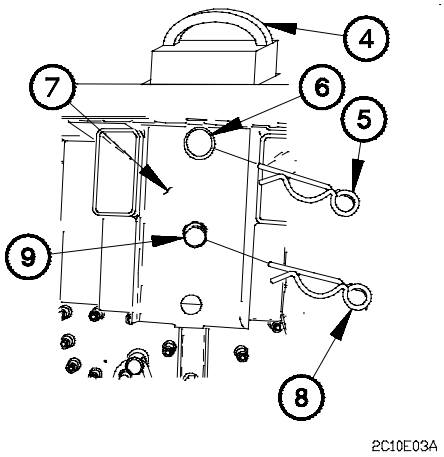

f. Load Spreader Installation.

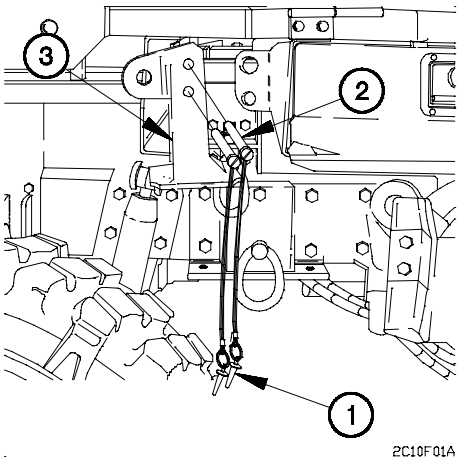

NOTE

- A load spreader is mounted on both sides of vehicle. Left side shown.
- Steps (1) through (8) require the aid of an assistant.

(1) Remove two safety pins (1) from pins (2) on vehicle.

(2) Remove two pins (2) and front load spreader (3) from vehicle.

3-10. M1093 AIR DROP PREPARATION (CONT)

(3) Remove pin (4) and shackle (5) from front bumper (6).

(4) Install front load spreader (3) on front bumper (6) with two pins (2).

(5) Install two safety pins (1) in pins (2).

(6) Mount shackle (5) on front load spreader (3).

(7) Install pin (4) on front load spreader (3) and shackle (5) finger tight.

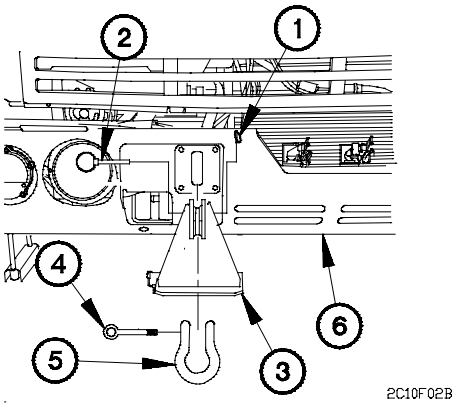

g. Follow-On Maintenance.

Remove wheel chocks (para 2-27h).

End of Task.

3-11. M1093 AIR DROP RECOVERY OPERATIONS

This task covers:

a. Cab Recovery
b. Spare Tire Recovery (Vehicles Equipped with Machine Gun Ring).
c. Spare Tire Recovery (Vehicles Not Equipped with Machine Gun Ring).
d. Slide Assembly Recovery
e. Load Spreader Recovery
f. Follow-On Maintenance

INITIAL SETUP

Equipment Conditions
Vehicle parked on level ground.
Engine shut down (para 2-27f).
Wheels chocked (para 2-27h).

Tools and Special Tools
Wrench Assembly, Speedhandle (Item 24 (COEI), Appendix B)
Wrench, Adjustable, 8 in. (Item 50, Appendix B)
Strap Assembly (Item 23 (COEI), Appendix B)
Sling Assembly, Air Drop Roof (Item 22 (COEI), Appendix B)

Tools and Special Tools (Cont)
Crane, Light Material Handling, Kit 1500 lb Capacity (Appendix C) (Vehicles equipped with machine gun ring)
Crane Adapter Kit (Appendix C) (Vehicles equipped with machine gun ring)

References
FM 10-526

Personnel Required
(3)

a. Cab Recovery.

WARNING

Vehicle must not be operated until rear panel and side panels are raised and properly secured. Failure to comply may result in serious injury or death to personnel or damage to equipment.

NOTE

Steps (1) through (56) require the aid of an assistant.

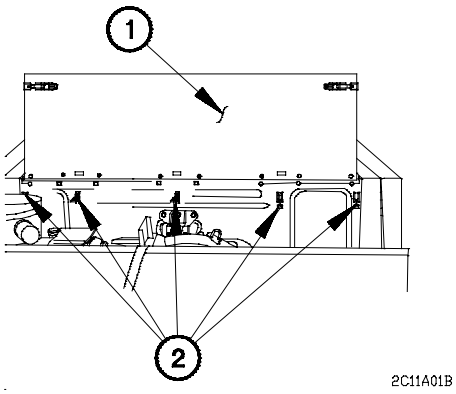

(1) Raise rear panel (1) and fasten five panel latches (2).

3-11. M1093 AIR DROP RECOVERY OPERATIONS (CONT)

NOTE

Perform steps (2) through (13) on vehicles equipped with machine gun ring.

(2) Remove davit (3) from cargo bed (4).

(3) Stow davit (3) on back of rear panel (1) and close three clamps (5).

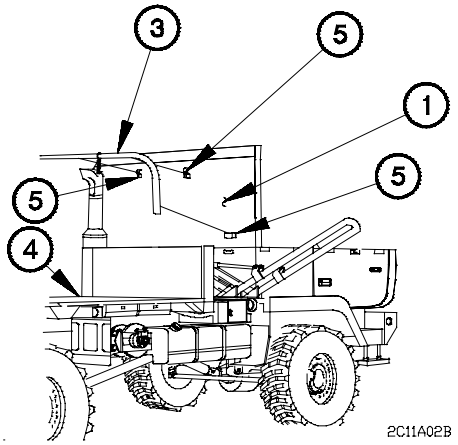

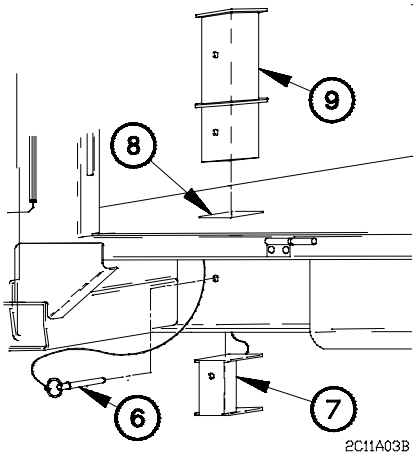

NOTE

LMHC extension kit is installed in left front crane pocket.

(4) Remove quick release pin (6) and plug (7) from crane pocket (8).

(5) Install crane extension (9) in crane pocket (8) with plug (7) and quick release pin (6).

WARNING

Mast weighs approximately 100 lbs (45 kgs). The aid of an assistant is required to install mast on crane extension. Failure to comply may result in injury to personnel or damage to equipment.

(6) Install mast (10) in crane extension (9) with quick release pin (11).

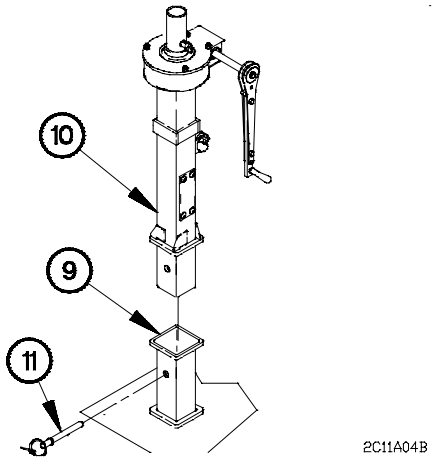

(7) Position turret (12) on mast (10).

(8) Install quick release pin (13) in turret (12).

WARNING

Light Material Handling Crane (LMHC) boom and winch weighs approximately 100 lbs (50 kgs). The aid of an assistant is required to install LMHC boom and winch.

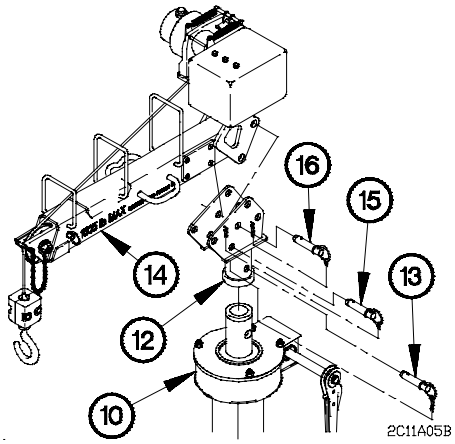

(9) Position LMHC boom (14) on turret (12).

(10) Install quick release pins (15 and 16) in turret (12).

(11) Set LMHC boom (14) to 25-degrees (para 2-29f).

(12) Extend LMHC boom (14) fully (para 2-29g).

(13) Connect remote control and power cable connectors (para 2-29d).

3-11. M1093 AIR DROP RECOVERY OPERATIONS (CONT)

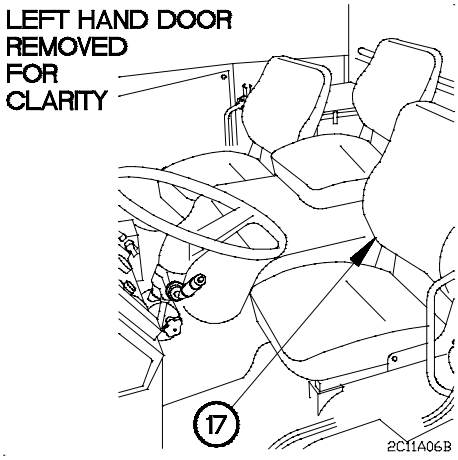

(14) Raise three seat backs (17).

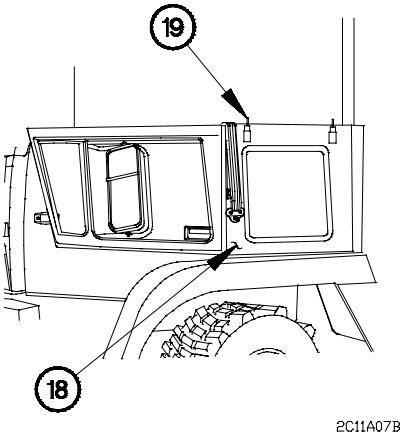

(15) Raise top half of two side panels (18) and fasten four side panel latches (19) on inside of vehicle.

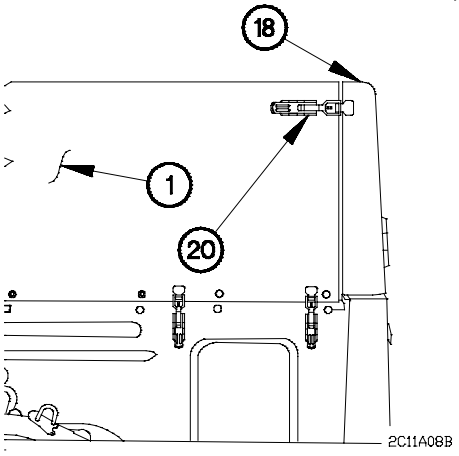

(16) Fasten two latches (20) to side panels (18) and rear panel (1) on outside of vehicle.

NOTE

Left and right side captive bolts attach the same way. Left side shown.

(17) Install captive bolt (21) in rear panel (1).

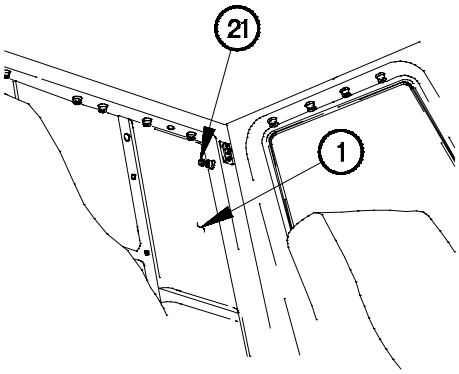

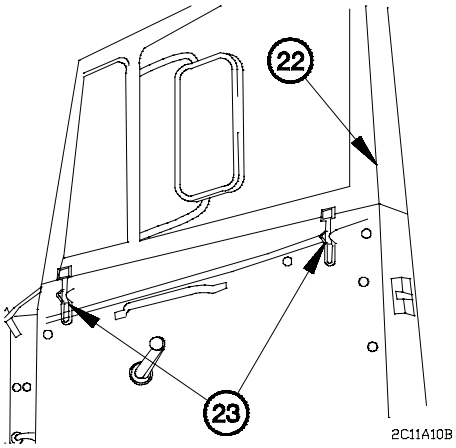

NOTE

Right and left doors are raised the same way. Right side shown.

(18) Raise top half of door (22) and fasten two latches (23).

3-11. M1093 AIR DROP RECOVERY OPERATIONS (CONT)

(19) Raise windshield (24) and fasten two windshield latches (25).

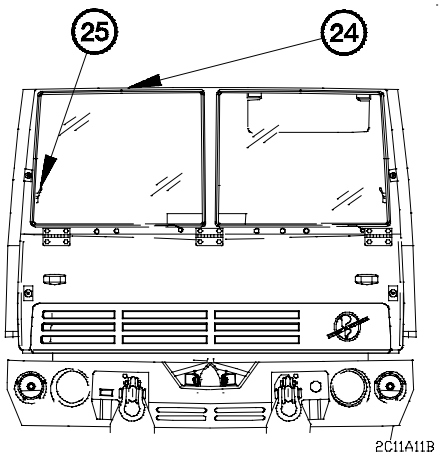

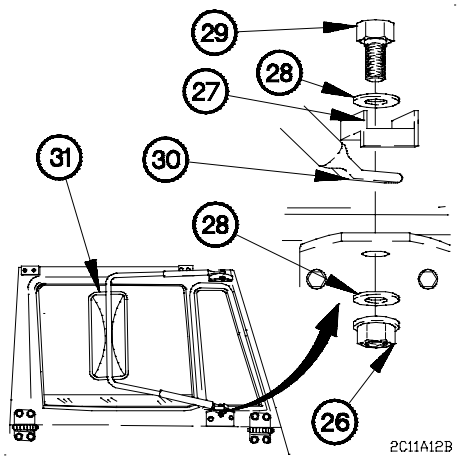

(20) Remove nut (26), clip (27), two washers (28), and screw (29) from mirror support (30).

(21) Unfold mirror (31).

(22) Install clip (27) between mirror support (30) and bracket (32).

(23) Install screw (29), two washers (28), and nut (26).

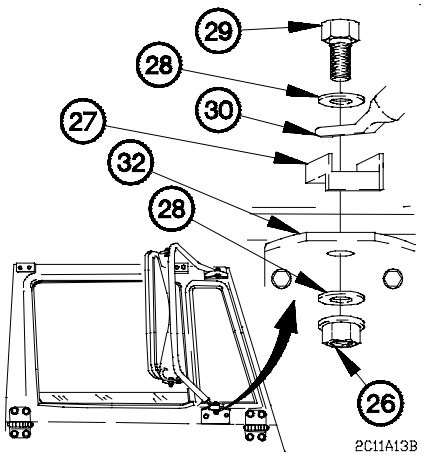

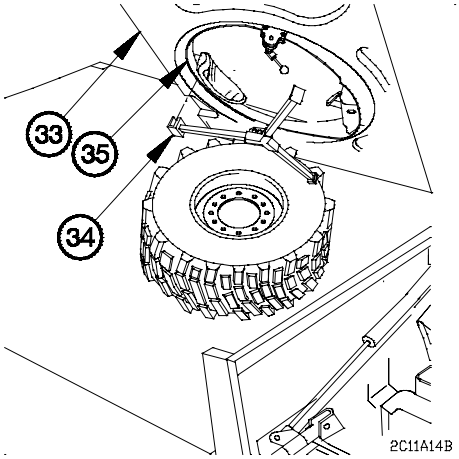

NOTE

- Perform steps (24) through (33) on cab roofs equipped with machine gun ring.
- Steps (24) and (25) require the aid of two assistants.
- Lift edges of cab roof until y-adapter can be installed.

(24) Lift front and rear of cab roof (33).

(25) Install y-adapter (34) on machine gun ring (35).

(26) Position LMHC hook (36) over cab roof (33).

CAUTION

Hook must be installed on hole closest to the front of cab roof. Failure to comply may result in damage to equipment.

(27) Install LMHC hook (36) to y-adapter (34).

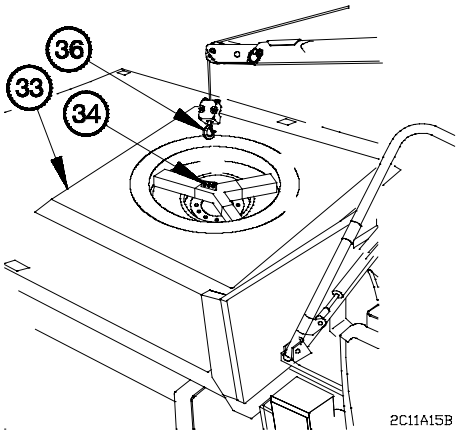

3-11. M1093 AIR DROP RECOVERY OPERATIONS (CONT)

WARNING

- **Use caution when raising cab roof. Cab roof may swing rearward upon first raising from spare tire. The aid of two assistants is required to control cab roof. Failure to comply may result in injury to personnel or damage to equipment.**
- **Cab roof and machine gun ring weigh approximately 500 lbs (227 kgs). The aid of two assistants is required to install cab roof and machine gun ring. Failure to comply may result in injury to personnel or damage to equipment.**

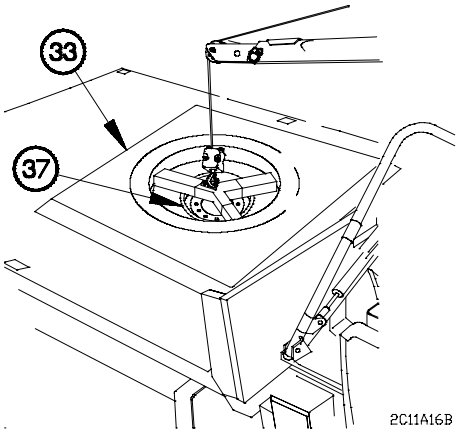

(28) Lift cab roof (33) from spare tire (37).

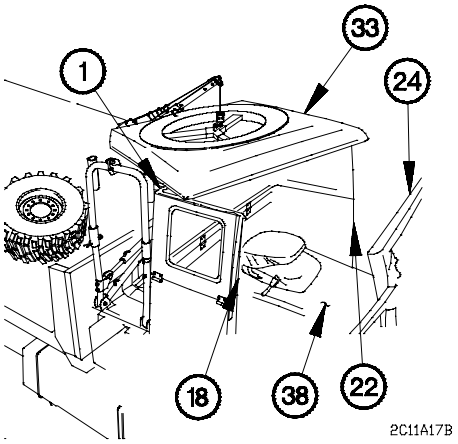

(29) Swing cab roof (33) around so cab roof is over cab (38).

(30) Align cab roof (33) over rear panel (1), side panel (18), doors (22), and windshield (24).

(31) Lower cab roof (33).

(32) Remove y-adapter (34) from machine gun ring (35).

(33) Remove y-adapter (34) from LMHC hook (36).

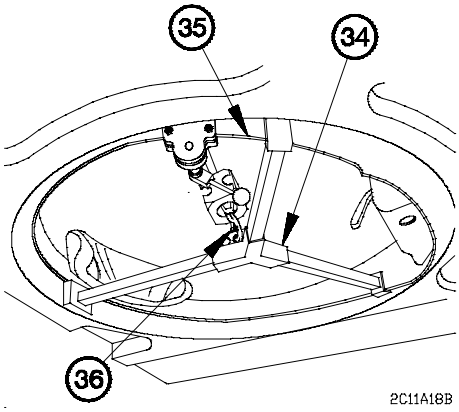

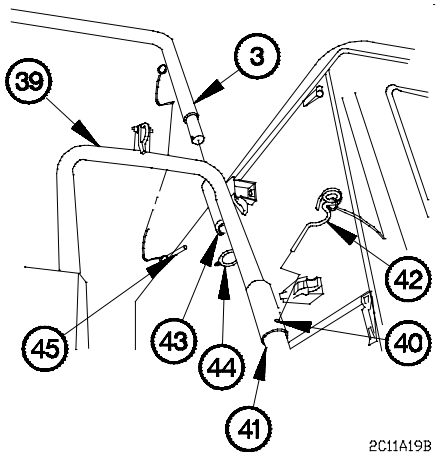

NOTE

Perform steps (34) through (54) on cab roofs not equipped with machine gun ring.

(34) Raise spare tire lift arm (39) and align hole in collar (40) with hole in spare tire retainer (41).

(35) Install two safety pins (42) in spare tire lift arm (39).

(36) Install davit (3) in sleeve (43) on spare tire lift arm (39).

(37) Install safety washer (44) and safety pin (45) in bottom of davit (3).

3-11. M1093 AIR DROP RECOVERY OPERATIONS (CONT)

WARNING

Cab roof weighs approximately 110 lbs (50 kgs). Use caution when handling cab roof. Failure to comply may result in injury to personnel or damage to equipment.

(38) Lift cab roof (33) and lower on front side of cargo bed (4) and spare tire (37).

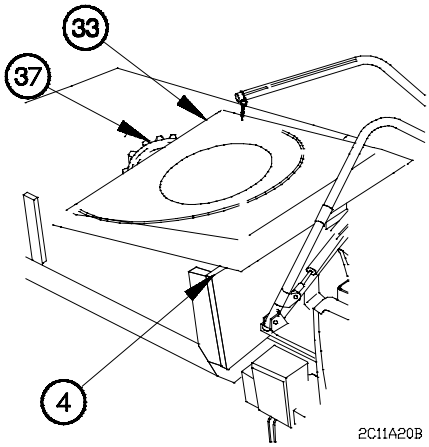

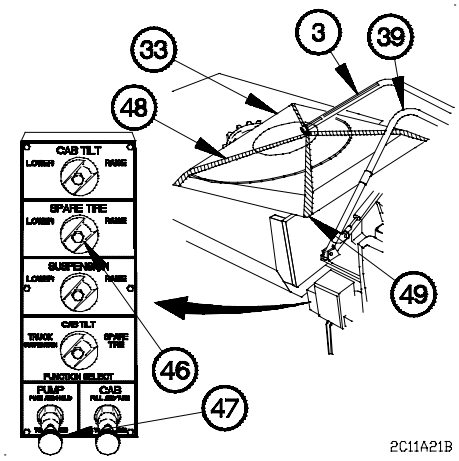

(39) Turn SPARE TIRE knob (46) to RAISE position.

NOTE

Use back-up hydraulic pump (para 2-52) if pressing PUMP knob does not accomplish step (40).

(40) Press and hold PUMP knob (47).

(41) Raise spare tire lift arm (39) and davit (3) over center of cab roof (33).

(42) Connect lifting strap (48) to four brackets (49) on cab roof (33).

(43) Connect lifting strap (48) to davit (3).

(44) Turn SPARE TIRE knob (46) to LOWER position.

NOTE

Use back-up hydraulic pump (para 2-52) if pressing PUMP knob does not accomplish step (45).

(45) Press and hold PUMP knob (47).

(46) Raise cab roof (33) until spare tire lift arm (39) is straight up and down.

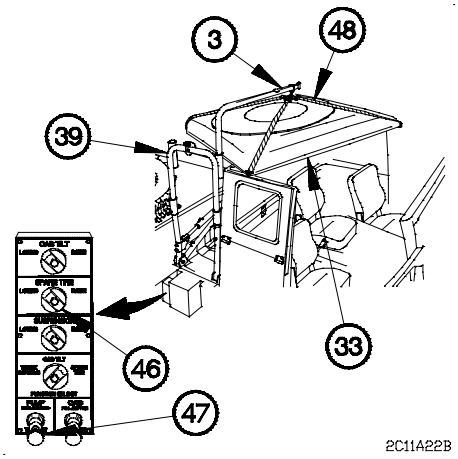

(47) Turn SPARE TIRE knob (46) mid-way between RAISE and LOWER position to lock spare tire lift arm (39) in place.

NOTE

Use back-up hydraulic pump (para 2-52) if pressing PUMP knob does not accomplish step (48).

(48) Press and hold PUMP knob (47).

(49) Align cab roof (33) over rear panel (1), side panel (18), doors (22), and windshield (24).

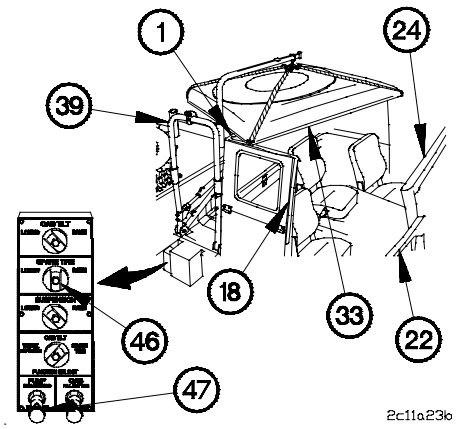

3-11. M1093 AIR DROP RECOVERY OPERATIONS (CONT)

(50) Turn SPARE TIRE knob (46) to LOWER position.

NOTE

Use back-up hydraulic pump (para 2-52) if pressing PUMP knob does not accomplish step (51).

(51) Press and hold PUMP knob (47).

(52) Move davit chain (50) inward to stop.

(53) Lower cab roof (33).

(54) Remove lifting strap (48) from four brackets (49).

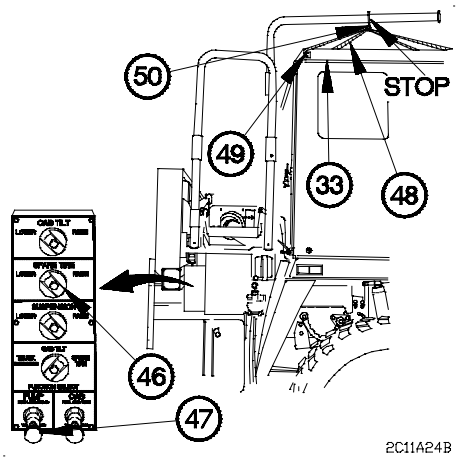

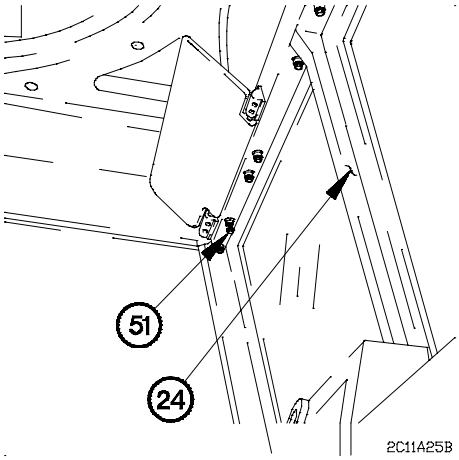

NOTE

Do not tighten captive bolts until all ten captive bolts are in position.

(55) Position ten captive bolts (51) on windshield (24).

(56) Tighten ten captive bolts (51).

NOTE

Do not tighten captive bolts until all four captive bolts are in position.

(57) Position four captive bolts (52) on right side panel (18).

(58) Tighten four captive bolts (52).

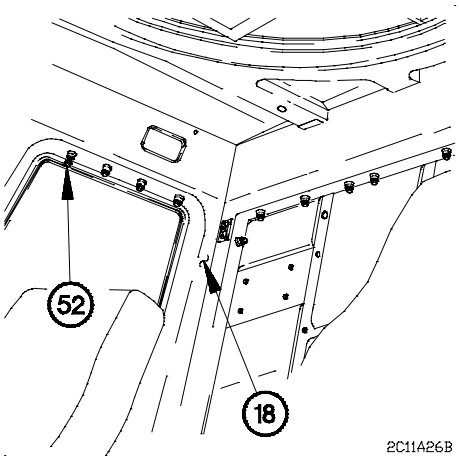

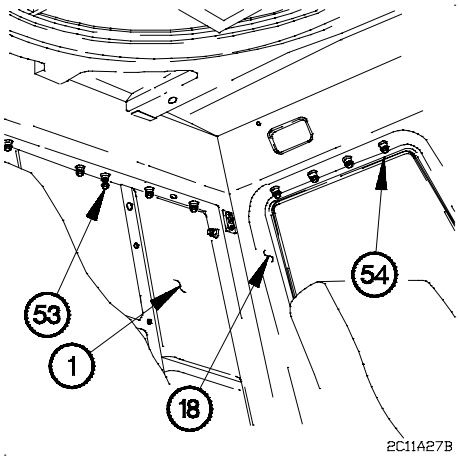

NOTE

Do not tighten captive bolts until all ten captive bolts are in position.

(59) Position ten captive bolts (53) on rear panel (1).

(60) Tighten ten captive bolts (53).

NOTE

Do not tighten captive bolts until all ten captive bolts are in position.

(61) Position four captive bolts (54) on left side panel (18).

(62) Tighten four captive bolts (54).

3-11. M1093 AIR DROP RECOVERY OPERATIONS (CONT)

(63) Connect connector J3 (55) to connector P3 (56).

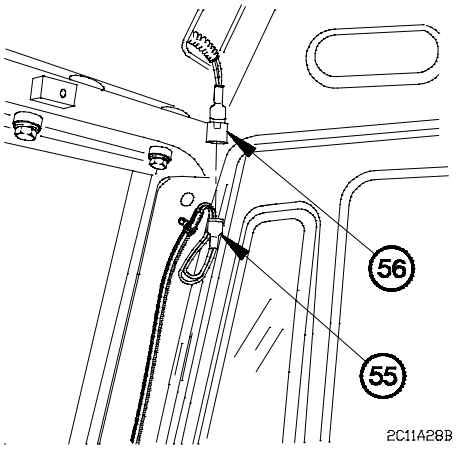

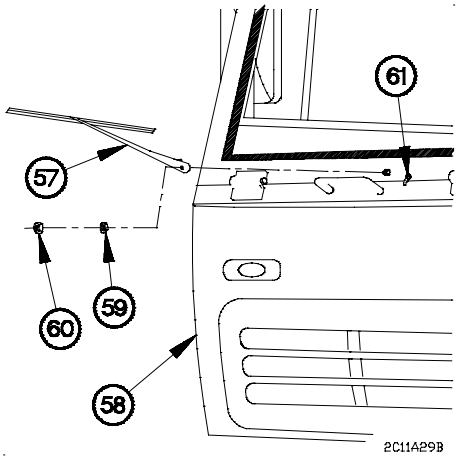

NOTE

Left and right windshield wiper arms are installed the same way. Right side shown.

(64) Install windshield wiper arm (57) on cab (58) with lockwasher (59) and nut (60).

(65) Install windshield wiper tube (61) on windshield wiper arm (57).

b. Spare Tire Recovery (Vehicles Equipped With Machine Gun Ring).

(1) Remove safety chain (1) from spare tire retainer lift arm (2).

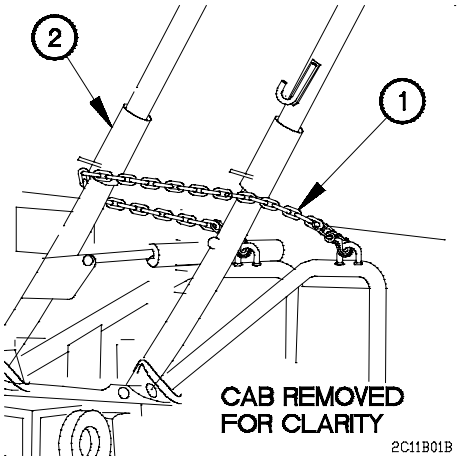

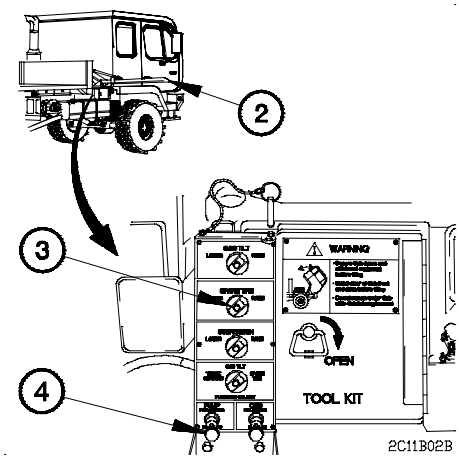

(2) Turn SPARE TIRE knob (3) to LOWER position.

(3) Press and hold PUMP knob (4) until spare tire retainer lift arm (2) is lowered.

(4) Position LMHC hook (5) over center of spare tire (6).

(5) Connect safety chain (1) to spare tire wheel hub (7).

(6) Connect safety chain (1) to LMHC hook (5).

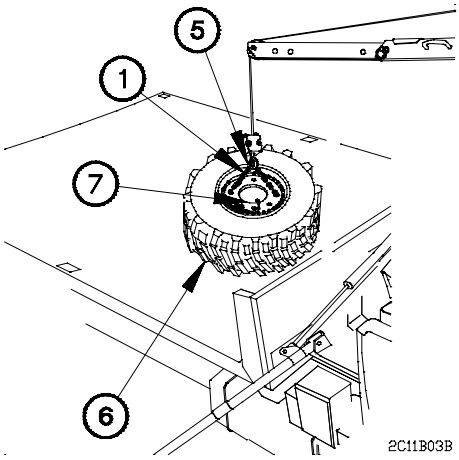

3-11. M1093 AIR DROP RECOVERY OPERATIONS (CONT)

WARNING

Tire weighs approximately 350 lbs (159 kgs). Use extreme care when handling tire. Failure to comply may result in injury to personnel.

NOTE

Steps (7) through (9) require the aid of an assistant.

(7) Raise spare tire (6) with LMHC (8).

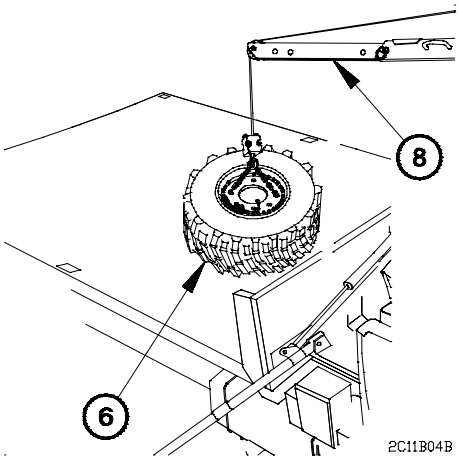

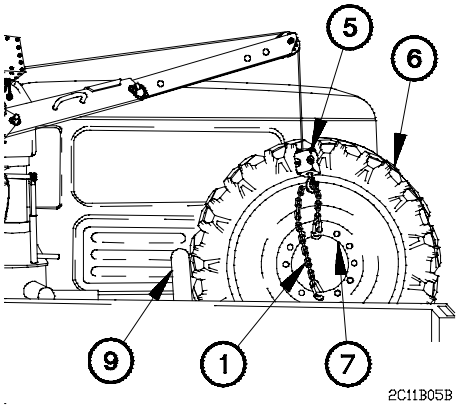

NOTE

CTIS valve on tire must be positioned to the front of vehicle and at the 6 o'clock position.

(8) Position spare tire (6) over spare tire retainer (9).

(9) Lower spare tire (6) to spare tire retainer (9).

(10) Disconnect safety chain (1) from LMHC hook (5).

(11) Remove safety chain (1) from spare tire wheel hub (7).

(12) Raise cab (para 2-28a).

(13) Turn SPARE TIRE knob (3) to RAISE position.

(14) Press and hold PUMP knob (4) until spare tire retainer lift arm (2) is raised.

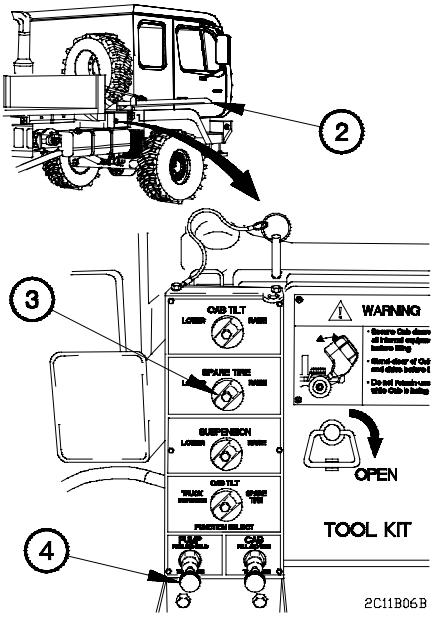

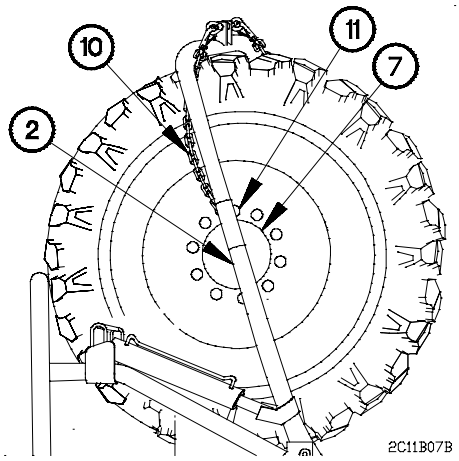

(15) Disconnect chain (10) from spare tire retainer lift arm (2).

(16) Route chain (10) through uppermost lug hole (11) in wheel hub (7).

(17) Connect chain (10) to spare tire retainer lift arm (2).

3-11. M1093 AIR DROP RECOVERY OPERATIONS (CONT)

CAUTION

- Tread engagers must be in slots of tire treads. A lose strap will allow tire to move causing chafing of strap and possible loss of tire. Failure to comply may result in damage to equipment.
- Tread engagers must not be snug at installation for proper fit, but strap must have a tight fit. Failure to comply may result in damage to equipment.

(18) Position tread engager (12) in third tread (13), tread engager (14) in sixth tread (15), and tread engager (16) in ninth tread (17).

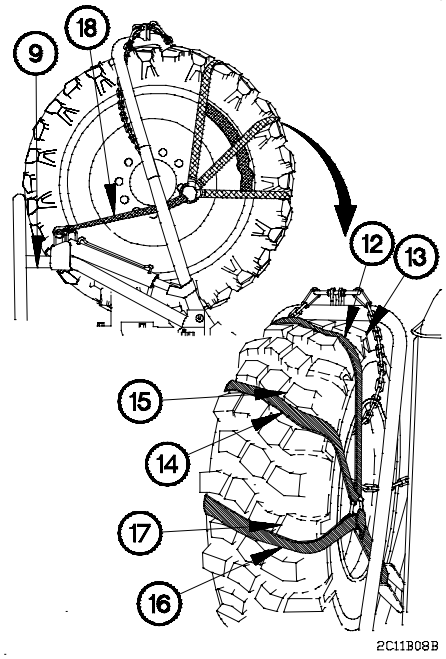

(19) Connect strap (18) to spare tire retainer (9).

(20) Feed other end of strap (18) through ratchet (19).

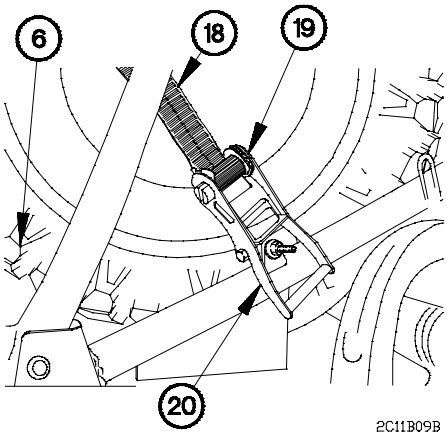

CAUTION

Ensure that strap is wrapped around ratchet at least three complete wraps after tightening. Failure to comply may result in damage to equipment.

(21) Tighten strap (18) around spare tire (6) with ratchet (19) and close latch (20).

CAUTION

Ensure that safety chain is loose. If safety chain is tight then strap is not tight enough. Failure to comply may result in damage to equipment.

(22) Connect safety chain (1) to spare tire retainer (9).

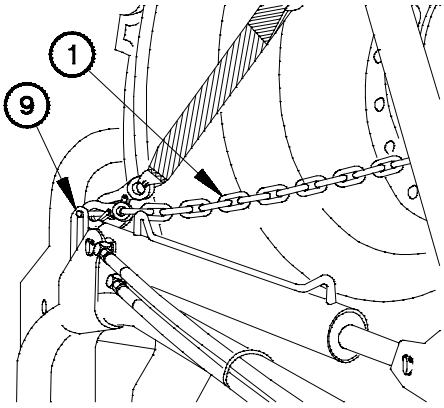

2C11B10B

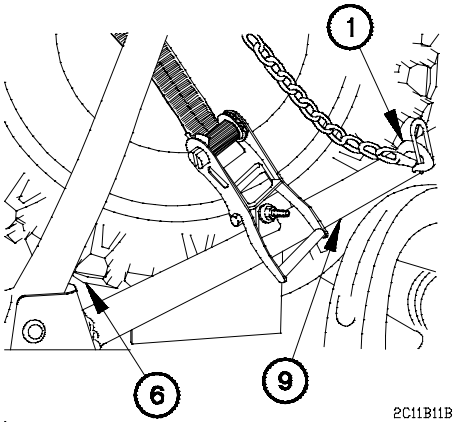

2C11B11B

(23) Route other end of safety chain (1) through spare tire (6) and connect to spare tire retainer (9).

(24) Lower cab (para 2-28b).

(25) Disconnect remote control and power cable connectors (para 2-29c).

(26) Remove quick release pins (21 and 22) from turret (23).

WARNING

LMHC boom and winch weighs approximately 110 lbs (50 kgs). The aid of an assistant is required to remove LMHC boom and winch. Failure to comply may result in injury to personnel or damage to equipment.

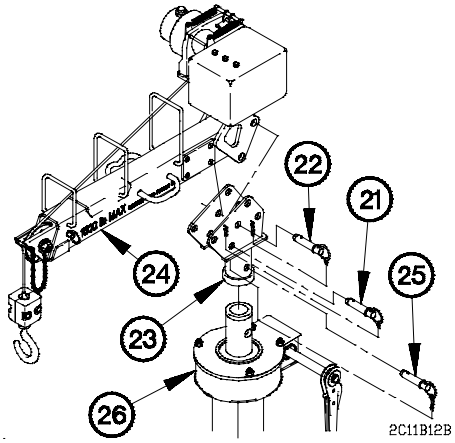

2C11B12B

(27) Remove boom (24) from turret (23).

(28) Remove quick release pin (25) from turret (23).

(29) Remove turret (23) from mast (26).

3-11. M1093 AIR DROP RECOVERY OPERATIONS (CONT)

(30) Remove quick release pin (27) and mast (26) from LMHC extension (28).

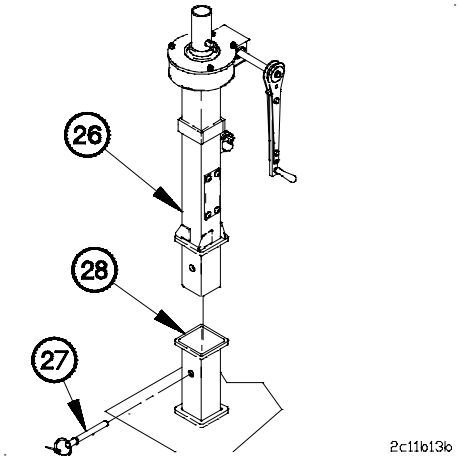

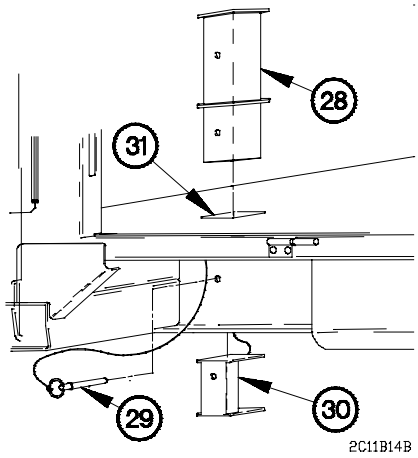

(31) Remove quick release pin (29), plug (30), and LMHC extension (28) from crane pocket (31).

(32) Install plug (30) in crane pocket (31) with quick release pin (29).

c. Spare Tire Recovery. (Vehicles Not Equipped with Machine Gun Ring).

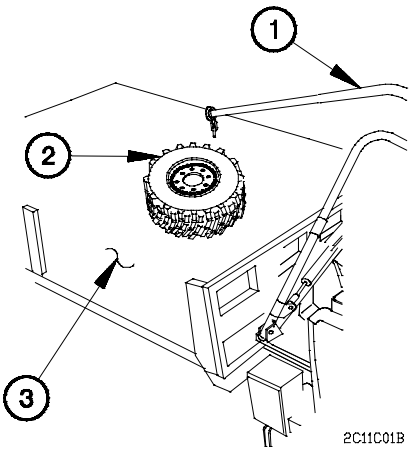

NOTE

Steps (1) through (19) require the aid of an assistant.

(1) Position davit (1) over spare tire (2) in cargo bed (3).

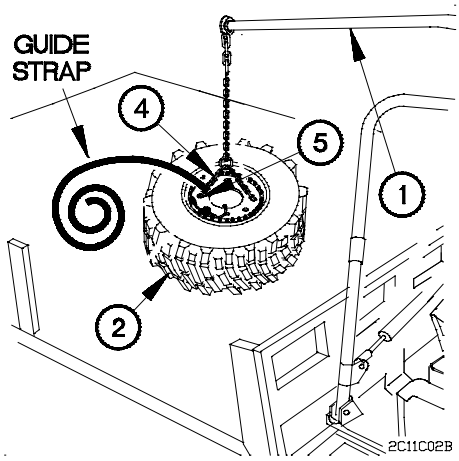

WARNING

Tire weighs approximately 350 lbs (159 kgs). Use extreme care when handling tire. Failure to comply may result in injury to personnel.

(2) Install chain (4) through two lug stud holes (5).

(3) Lower davit (1) and attach chain (4) to davit.

(4) Attach guide strap to spare tire (2).

3-11. M1093 AIR DROP RECOVERY OPERATIONS (CONT)

(5) Attach chain (6) to hook (7) on spare tire retainer (8).

(6) Wrap other end of chain (6) around spare tire retainer lift arm (9) above hook (10) and hook chain back to itself.

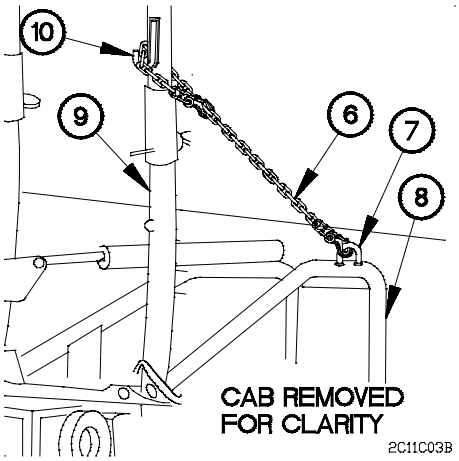

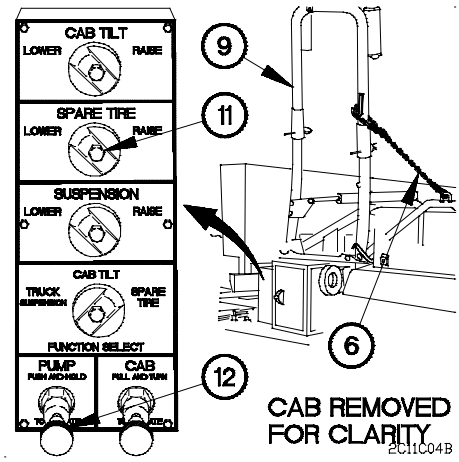

(7) Turn SPARE TIRE knob (11) to LOWER position.

NOTE

Use back-up hydraulic pump (para 2-52) if pressing PUMP knob does not accomplish step (8).

(8) Press and hold PUMP knob (12).

(9) Lower spare tire retainer lift arm (9) until tension is on chain (6).

(10) Raise spare tire (2) until spare tire retainer lift arm (9) is aligned with right corner of cab (13).

(11) Turn SPARE TIRE knob (11) mid-way between RAISE and LOWER position to lock spare tire retainer lift arm (9) in place.

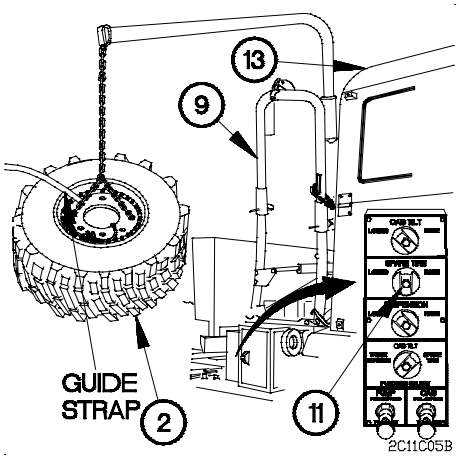

WARNING

Manifold operator must stand near hydraulic manifold and observe spare tire while spare tire is being lowered from cargo bed. Spare tire will gain momentum as it is being released. Failure to comply may result in serious injury or death to personnel.

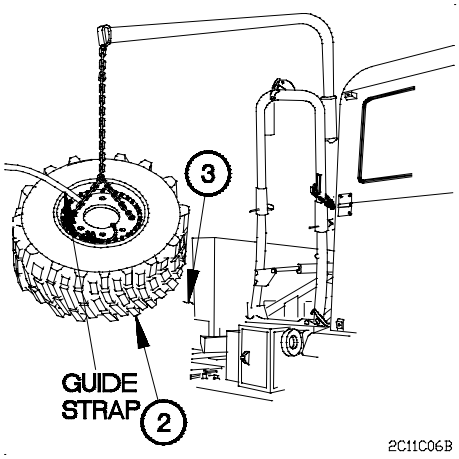

NOTE

Guide person should guide spare tire off cargo bed while standing on ground.

(12) Swing spare tire (2) off cargo bed (3).

3-11. M1093 AIR DROP RECOVERY OPERATIONS (CONT)

(13) Turn SPARE TIRE knob (11) to RAISE position.

NOTE

Use back-up hydraulic pump (para 2-52) if pressing PUMP knob does not accomplish step (8).

(14) Press and hold PUMP knob (12) until chain (6) is slack.

(15) Remove chain (6) from hook (7) and from spare tire retainer lift arm (9).

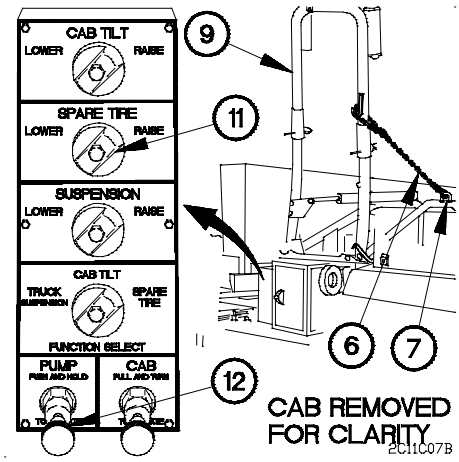

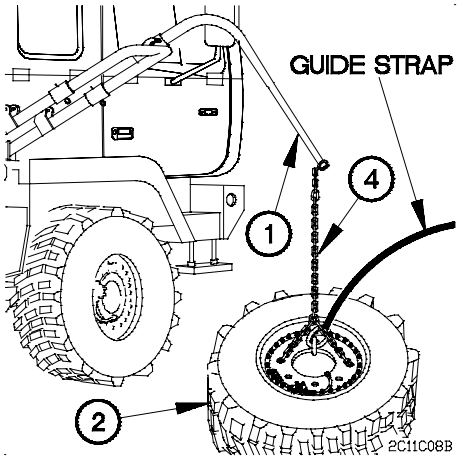

(16) Lower spare tire (2) to the ground.

(17) Remove guide strap from spare tire (2).

(18) Remove chain (4) from davit (1) and spare tire (2).

(19) Remove safety pin (14) and safety washer (15) from davit (1).

(20) Remove davit (1) from sleeve (16) on spare tire retainer lift arm (9).

(21) Install safety washer (15) and safety pin (14) on bottom of davit (1).

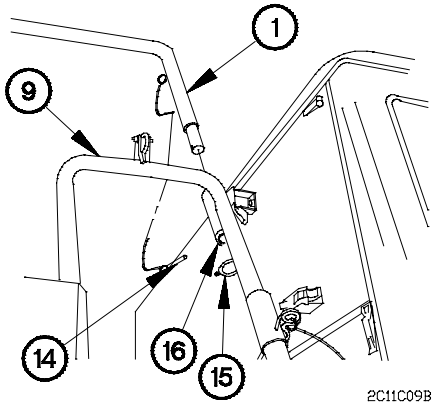

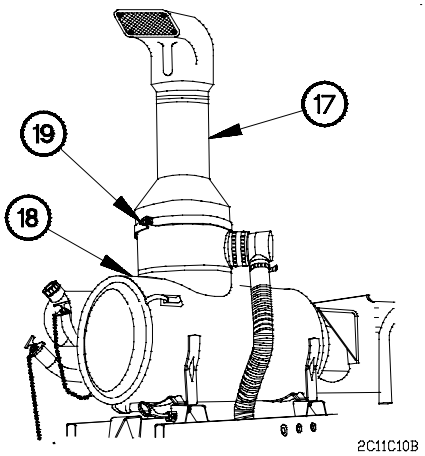

(22) Position air intake adapter (17) on inlet air cleaner housing (18) and tighten clamp (19).

3-11. M1093 AIR DROP RECOVERY OPERATIONS (CONT)

(23) Stow davit (1) on back of cab (13) and close three clamps (20).

(24) Stow spare tire (para 3-5d).

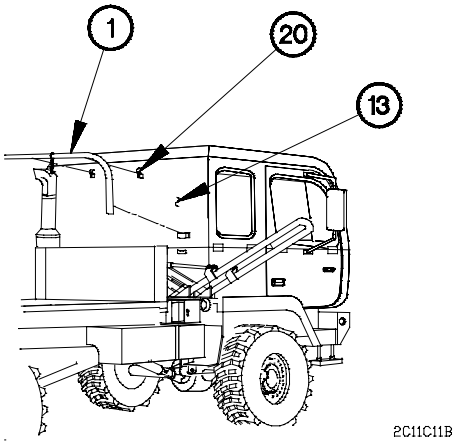

d. Slide Assembly Recovery.

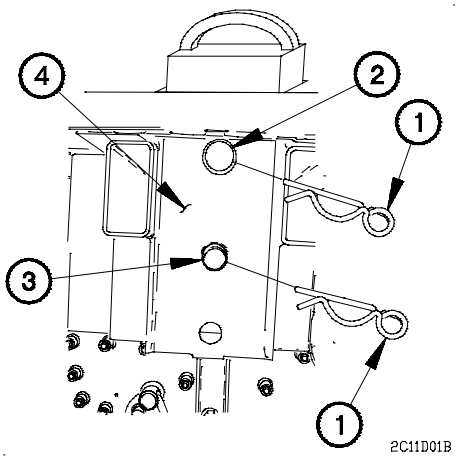

NOTE

Steps (1) through (10) require the aid of an assistant.

(1) Remove safety pins (1) from large pin (2) and small pin (3).

(2) Remove small pin (3) from middle hole of slide assembly receptacle (4).

(3) Remove large pin (2) from slide assembly (5).

(4) Lower slide assembly (5) in slide assembly receptacle (4).

(5) Install small pin (3) in bottom hole of slide assembly receptacle (4) and slide assembly (5).

(6) Install large pin (2) in large hole of slide assembly receptacle (4).

(7) Install two safety pins (1) in large pin (2) and small pin (3).

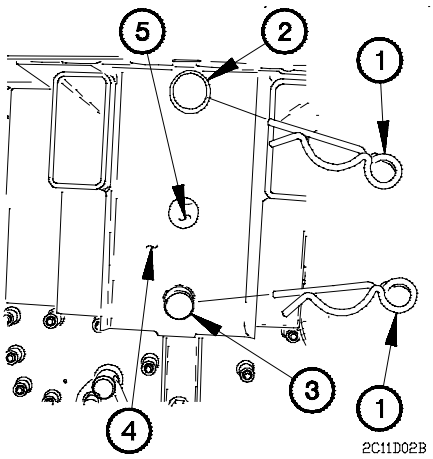

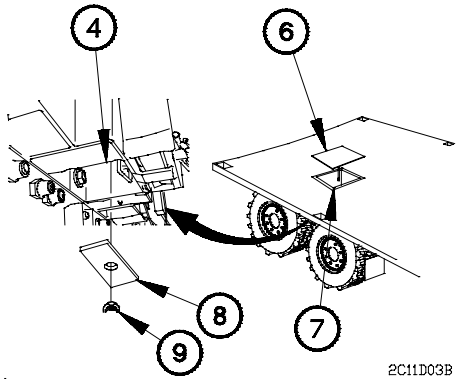

(8) Install cover plate assembly (6) in slide assembly receptacle (4) in cargo bed (7).

(9) Install retaining bar (8) on rod of cover plate assembly (6).

(10) Install wing nut (9) on rod of cover plate assembly (6).

3-11. M1093 AIR DROP RECOVERY OPERATIONS (CONT)

e. Load Spreader Recovery.

NOTE

- Left and right side load spreaders are installed the same way. Right side shown.
- Steps (1) through (5) require the aid of an assistant.

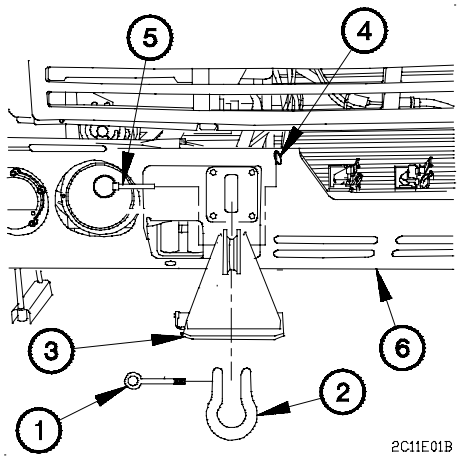

(1) Remove pin (1) and shackle (2) from front load spreader (3).

(2) Remove two safety pins (4), two pins (5), and front load spreader (3) from front bumper (6).

(3) Install shackle (2) and pin (1) on front bumper (6).

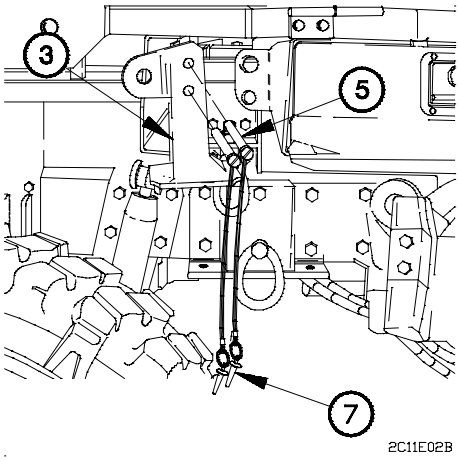

(4) Position front load spreader (3) and two pins (5) on stowage location on vehicle.

(5) Install two safety pins (7) on two pins (5).

f. Follow-On Maintenance.

(1) Install side panels (para 2-32e).

(2) Remove wheel chocks (para 2-27h).

(3) Notify Unit Maintenance to torque air intake adapter clamp in accordance with maintenance paragraph.

(4) Notify Unit Maintenance to tighten nuts on mirror to 21-27 lb-ft (29-37 N·m).

End of Task.

3-12. M1094 AIR DROP PREPARATION

This task covers:

a. Spare Tire Stowage
b. Cab Preparation
c. Spare Tire Retainer and Davit Preparation
d. Slide Assembly Installation
e. Load Spreader Installation
f. Follow-On Maintenance

INITIAL SETUP

Equipment Conditions
Vehicle parked on level ground.
Engine shut down (para 2-27f).
Wheels chocked (para 2-27h).
Spare tire removed (para 3-5a).
Cab protector lowered (para 2-38c).

Tools and Special Tools
Wrench Assembly, Speedhandle (Item 24 (COEI), Appendix B)
Wrench, Adjustable, 8 in. (Item 50, Appendix B)
Strap Assembly (Item 23 (COEI),Appendix B)
Sling Assembly, Air Drop Roof (Item 22 (COEI), Appendix B)

Personnel Required
(2)

a. Spare Tire Stowage.

NOTE

Steps (1) through (24) require the aid of an assistant.

(1) Open three clamps (1) and remove davit (2) from back of cab (3).

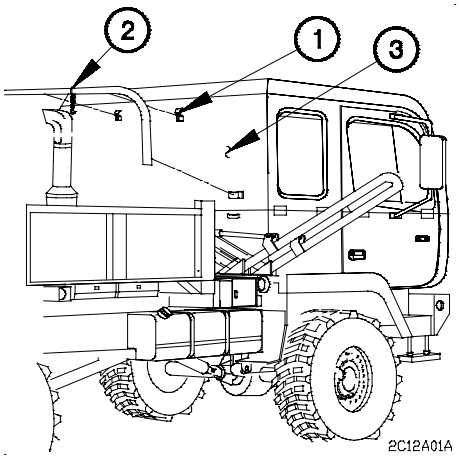

3-12. M1094 AIR DROP PREPARATION (CONT)

(2) Install davit (2) in sleeve (4) of spare tire retainer lift arm (5).

(3) Install safety washer (6) and safety pin (7) in bottom of davit (2).

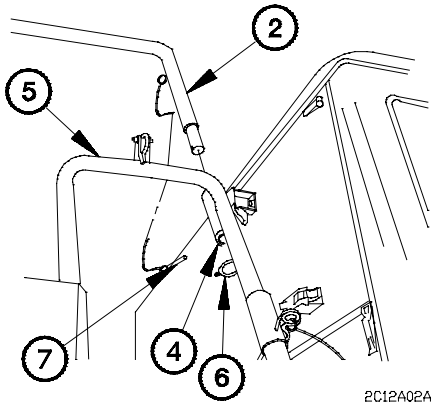

WARNING

Tire weighs approximately 350 lbs (159 kgs). Use extreme care when handling tire. Failure to comply may result in injury to personnel.

NOTE

Spare tire should be positioned on ground with CTIS wheel valve pointing outward.

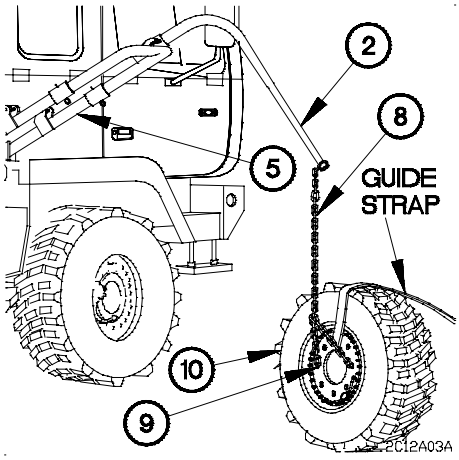

(4) Disconnect chain (8) from spare tire retainer lift arm (5).

(5) Install chain (8) through two wheel stud holes (9) then back to itself.

(6) Connect other end of chain (8) to davit (2).

(7) Attach guide strap to spare tire (10).

WARNING

Manifold operator must stand near hydraulic manifold and observe spare tire. Guide person must stand to the right front of vehicle, well clear of spare tire. Failure to comply may result in serious injury or death to personnel.

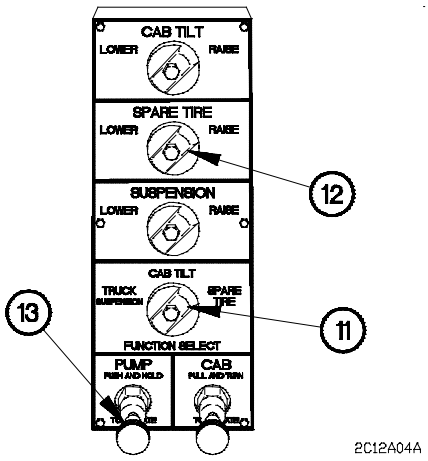

(8) Turn FUNCTION SELECT knob (11) to SPARE TIRE position.

(9) Turn SPARE TIRE knob (12) to RAISE position.

NOTE

Use back-up hydraulic pump (para 2-52) if pressing PUMP knob does not accomplish step (9).

(10) Press and hold PUMP knob (13).

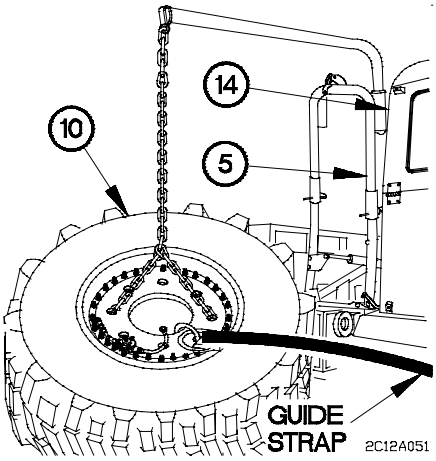

(11) Raise spare tire (10) until spare tire retainer lift arm (5) is aligned with right corner of cab (14).

3-12. M1094 AIR DROP PREPARATION (CONT)

(12) Attach chain (15) to hook (16) on spare tire retainer (17).

(13) Wrap other end of chain (15) around spare tire retainer lift arm (5) above hook (18) and hook chain back to itself.

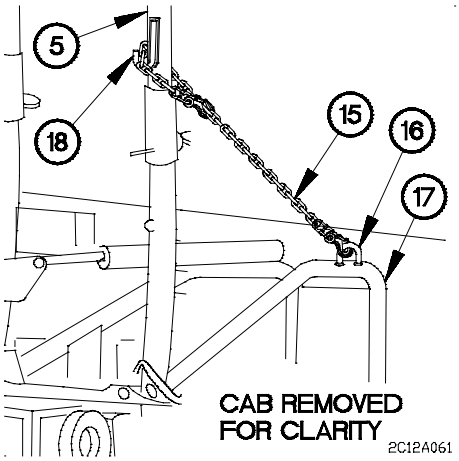

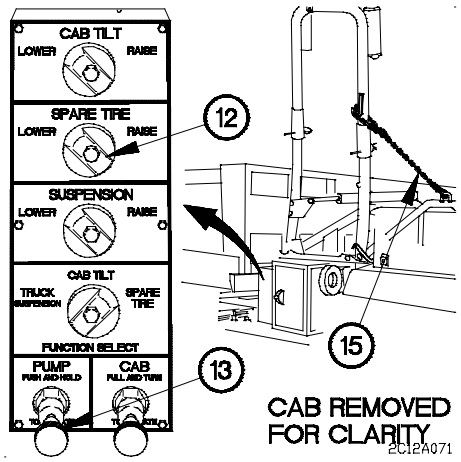

(14) Turn SPARE TIRE knob (12) to LOWER position.

NOTE

Use back-up hydraulic pump (para 2-52) if pressing PUMP knob does not accomplish step (15).

(15) Press and hold PUMP knob (13) until tension is on chain (15).

(16) Turn SPARE TIRE knob (12) mid-way between RAISE and LOWER to lock spare tire retainer lift arm (5) in place.

(17) Swing spare tire (10) to dump body (19).

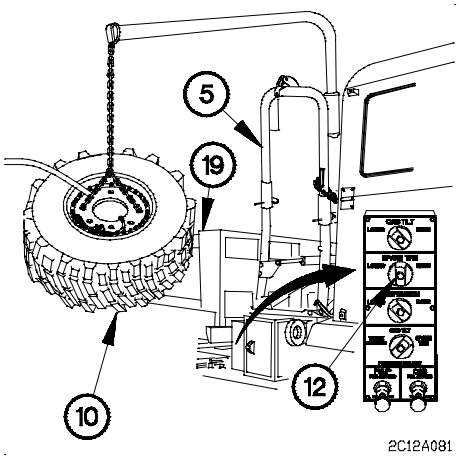

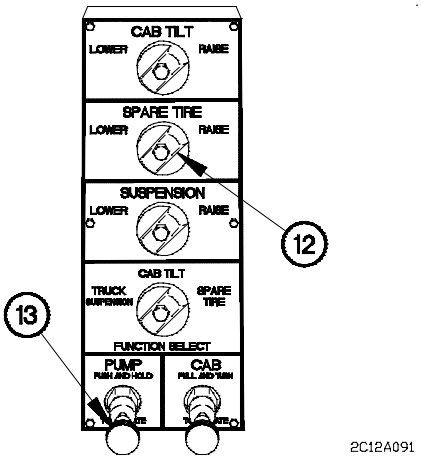

(18) Turn SPARE TIRE knob (12) to RAISE position.

NOTE

Use back-up hydraulic pump (para 2-52) if pressing PUMP knob does not accomplish step (19).

(19) Press and hold PUMP knob (13).

3-12. M1094 AIR DROP PREPARATION (CONT)

(20) Position spare tire (10) in the center of cab protector (20).

(21) Remove guide strap from spare tire (10).

(22) Disconnect chain (8) from davit (2).

(23) Disconnect chain (8) from spare tire (10).

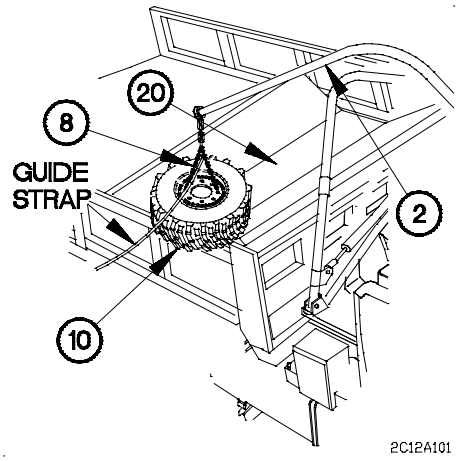

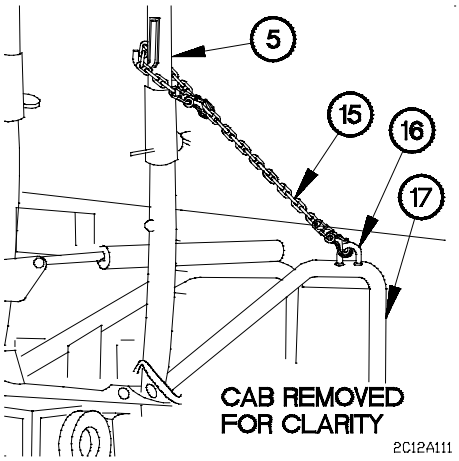

(24) Disconnect chain (15) from hook (16) on spare tire retainer (17).

(25) Disconnect other end of chain (15) from spare tire retainer lift arm (5).

b. Cab Preparation.

NOTE

- Stow all loose items before preparing cab.
- Both windshield wiper arms are removed the same. Right side shown.

(1) Remove windshield washer tube (1) from windshield wiper arm (2).

(2) Remove nut (3), lockwasher (4), and windshield wiper arm (2) from vehicle.

(3) Stow two wiper arms (2), lockwashers (4), and nuts (3) in TOOL KIT.

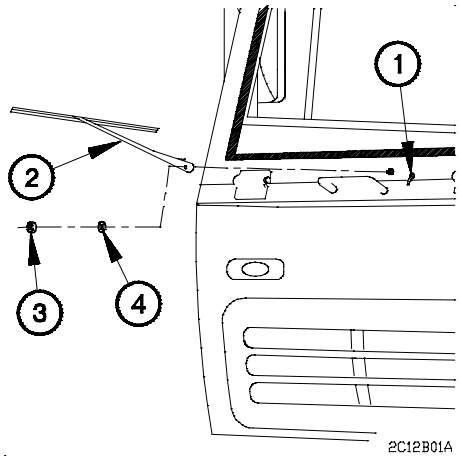

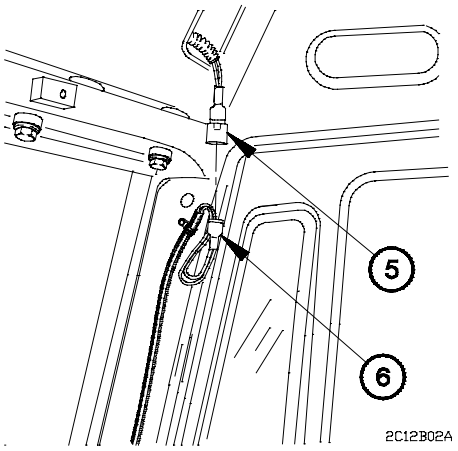

(4) Disconnect connector P3 (5) from connector J3 (6).

3-12. M1094 AIR DROP PREPARATION (CONT)

NOTE

It is necessary to pull down on captive bolt, after loosening, to lock it in place.

(5) Loosen four captive bolts (7) from left side panel (8).

(6) Pull down on four captive bolts (7) to lock in place.

(7) Loosen ten captive bolts (9) from rear panel (10).

(8) Pull down on ten captive bolts (9) to lock in place.

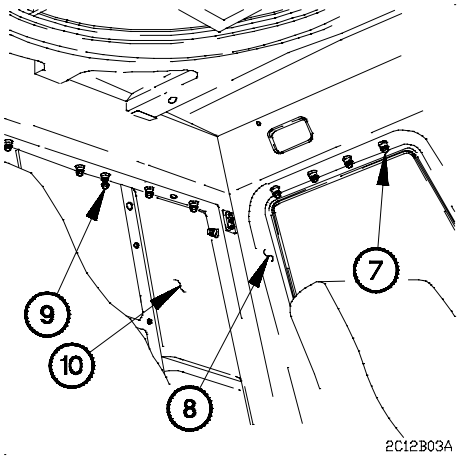

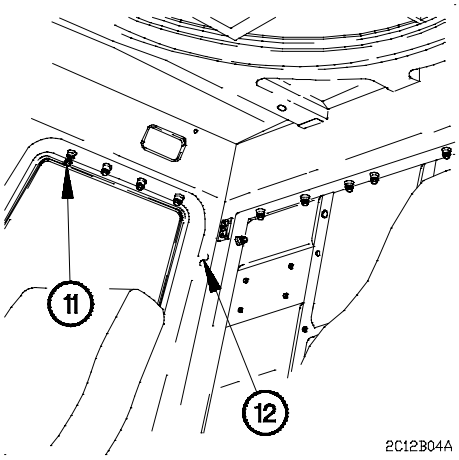

(9) Loosen four captive bolts (11) from right side panel (12).

(10) Pull down on four captive bolts (11) to lock in place.

(11) Loosen ten captive bolts (13) from windshield (14).

(12) Pull down on ten captive bolts (13) to lock in place.

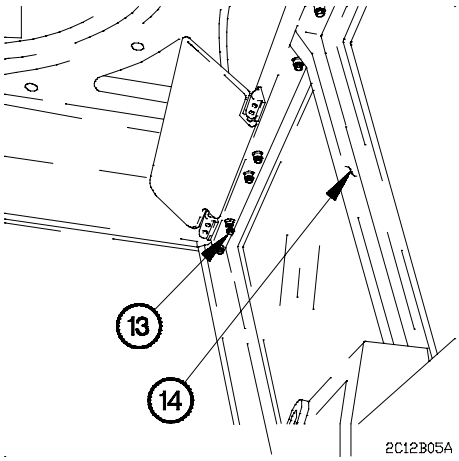

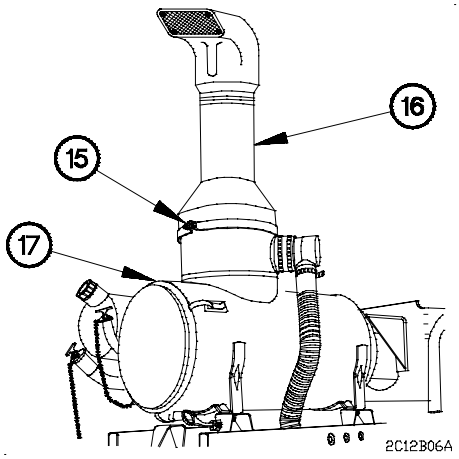

(13) Loosen nut (15) and remove air intake adapter (16) from intake air cleaner housing (17).

3-12. M1094 AIR DROP PREPARATION (CONT)

NOTE

Steps (14) through (25) requires the aid of an assistant.

(14) Position davit (18) over center of cab roof (19).

(15) Install lifting strap (20) on four brackets (21).

(16) Attach lifting strap (20) to davit (18).

(17) Turn SPARE TIRE knob (22) to LOWER position.

NOTE

Use back-up hydraulic pump (para 2-52) if pressing PUMP knob does not accomplish step (18).

(18) Press and hold PUMP knob (23).

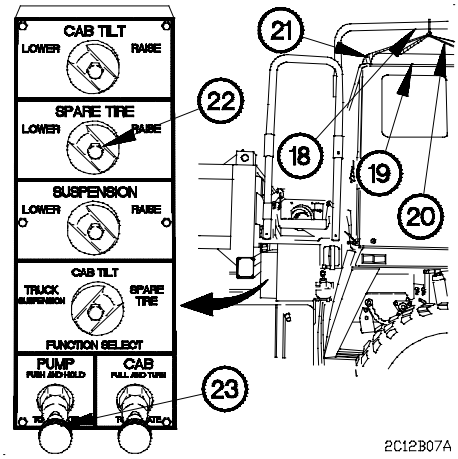

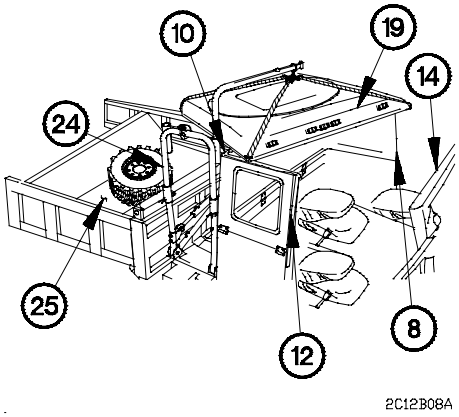

NOTE

It may be necessary to push up on cab roof, from inside cab, to help loosen cab roof from cab.

(19) Raise spare tire retainer lift arm (24) until cab roof (19) is clear of windshield (14), right side panel (12), left side panel (8), and rear panel (10).

(20) Swing cab roof (19) around so cab roof is over cab protector (25).

(21) Lower spare tire retainer lift arm (24) until cab roof (19) sits on cab protector (25) and spare tire (26).

(22) Remove lifting strap (20) from davit (18).

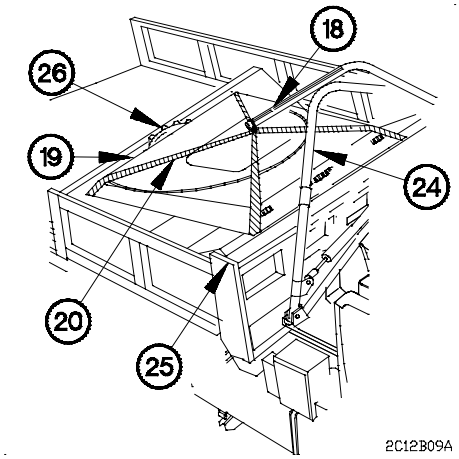

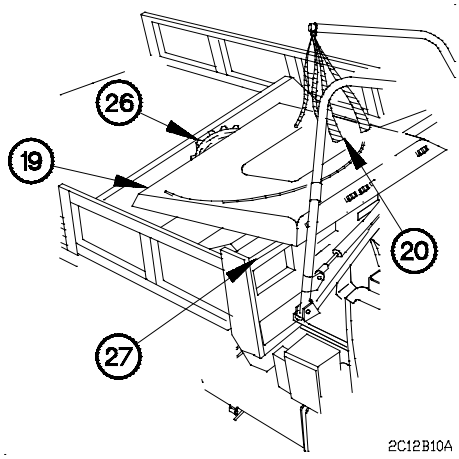

WARNING

Cab roof weighs approximately 126 lbs (57 kgs). Use care when handling cab roof. Failure to comply may result in injury to personnel or damage to equipment.

(23) Lift cab roof (19) from front side of dump body (27) and edge of spare tire (26).

(24) Position cab roof (19) over center of spare tire (26).

(25) Remove lifting strap (20) from cab roof (19).

3-12. M1094 AIR DROP PREPARATION (CONT)

(26) Roll window (28) completely down.

(27) Remove nut (29), two washers (30), and screw (31) from mirror support (32).

(28) Remove clip (33) from mirror support (32).

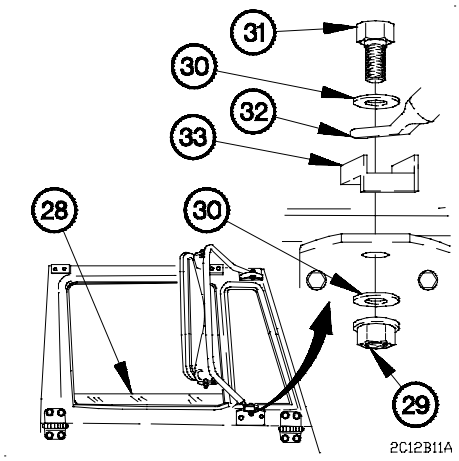

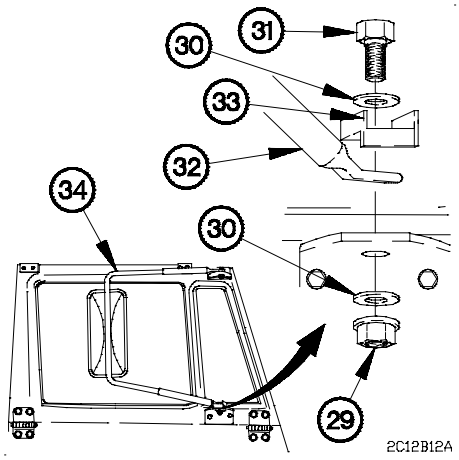

(29) Fold mirror (34) in door window opening.

NOTE

Stow clip in position shown on mirror support.

(30) Install screw (31), two washers (30), clip (33), and nut (29) on mirror support (32).

NOTE

Left and right side doors are lowered the same way. Right side shown.

(31) Release door latch (35).

(32) Lower top half of door (36).

(33) Lock top half of door (36) in place.

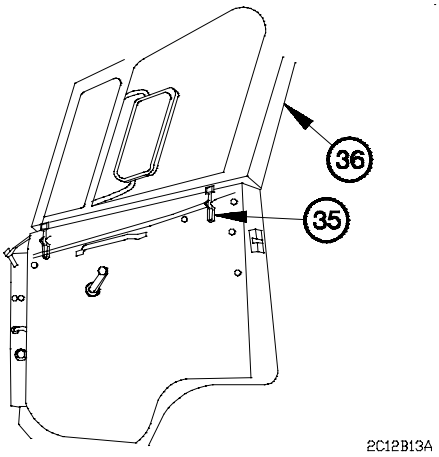

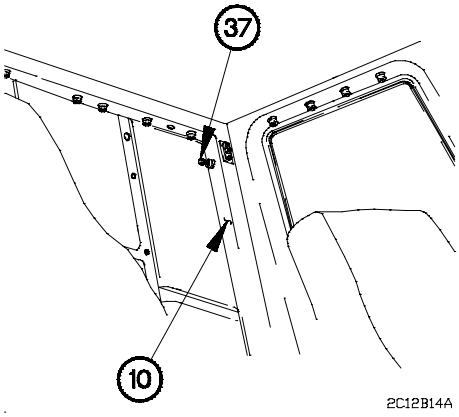

NOTE

- Left and right side rear panel are lowered the same way. Left side shown.
- It is necessary to pull down on captive bolt, after loosening, to lock it in place.

(34) Loosen captive bolt (37) from left side of rear panel (10).

(35) Pull out on captive bolt (37) to lock in place.

3-12. M1094 AIR DROP PREPARATION (CONT)

NOTE

Left and right side panels are released the same way. Left side shown.

(36) Release three side panel latches (38) on left side panel (8) on inside of cab (39).

(37) Release two side panel latches (40) on outside of cab (39).

(38) Lower top half of left side panel (8) outward and lock in place.

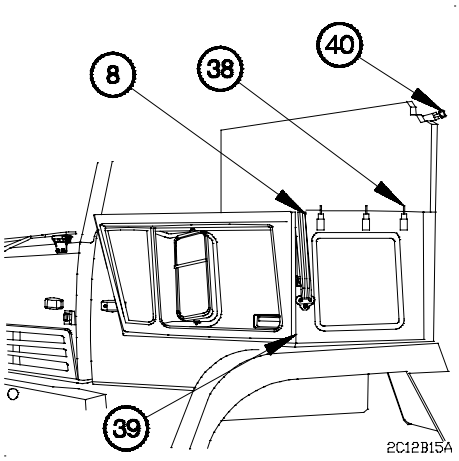

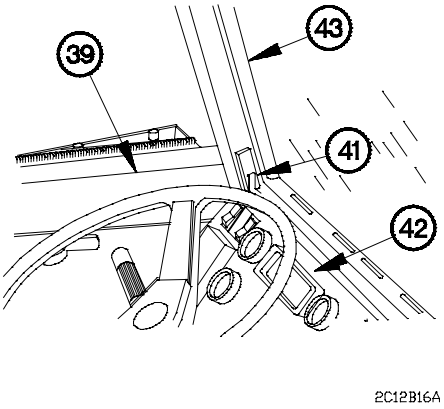

(39) Release two windshield latches (41) above dashboard (42) on inside of cab (39).

CAUTION

Use care when working around windshield and door glass. Failure to comply may result in damage to equipment.

(40) Lower windshield (43) outward and lock in place.

(41) Release five rear panel latches (44) on outside of cab (39).

(42) Fold down three seats (45).

(43) Lower rear panel (10) forward in cab (39).

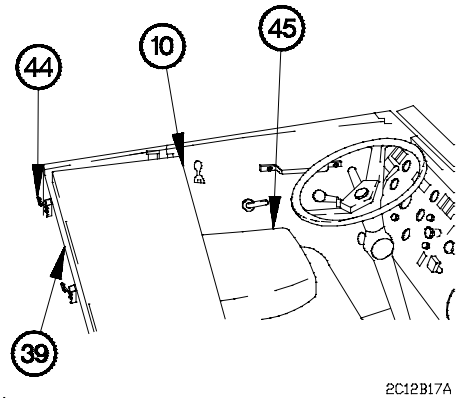

c. Spare Tire Retainer and Davit Preparation.

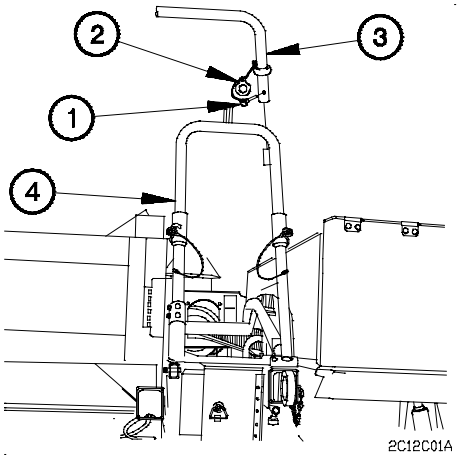

NOTE

Steps (1) through (6) require the aid of an assistant.

(1) Disconnect safety pin (1) and safety washer (2) from davit (3).

(2) Remove davit (3) from spare tire retainer lift arm (4).

(3) Connect safety washer (2) and safety pin (1) on davit (3).

3-12. M1094 AIR DROP PREPARATION (CONT)

NOTE

Air drop personnel will secure spare tire, cab top, and davit with rigging prior to air drop.

(4) Stow davit (3) with spare tire (5) and cab roof (6).

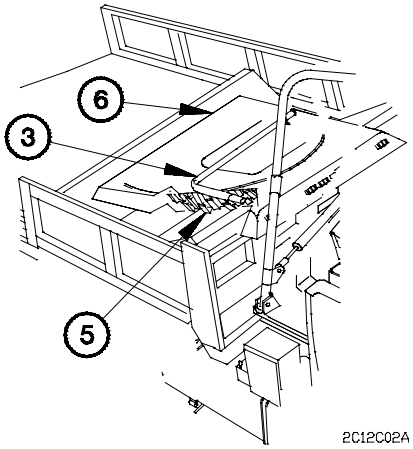

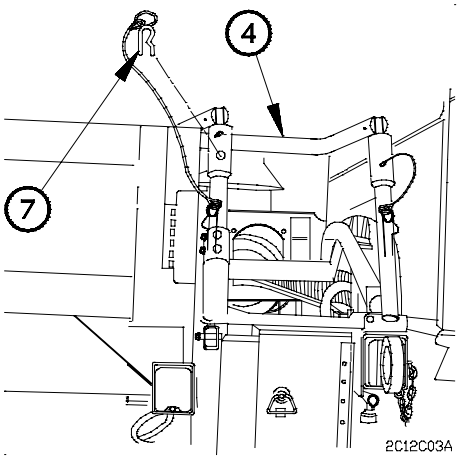

(5) Remove two safety pins (7) from spare tire retainer lift arm (4).

(6) Lower spare tire retainer lift arm (4) to stowage position and secure to vehicle.

d. Slide Assembly Installation.

NOTE

Steps (1) through (11) require the aid of an assistant.

(1) Remove wing nut (1) and retaining bar (2) from cover plate assembly (3).

(2) Remove cover plate assembly (3) from slide assembly receptacle (4).

(3) Assemble retaining bar (2) and wing nut (1) on threaded rod of cover plate assembly (3). Stow in TOOL KIT.

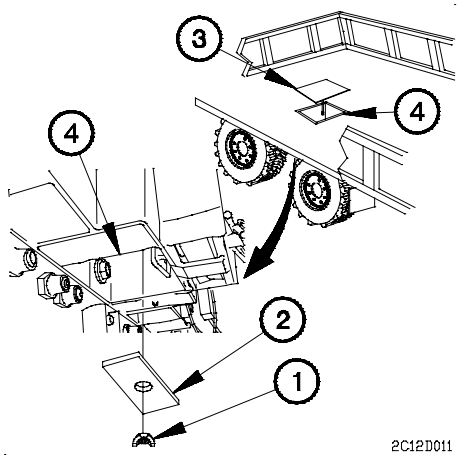

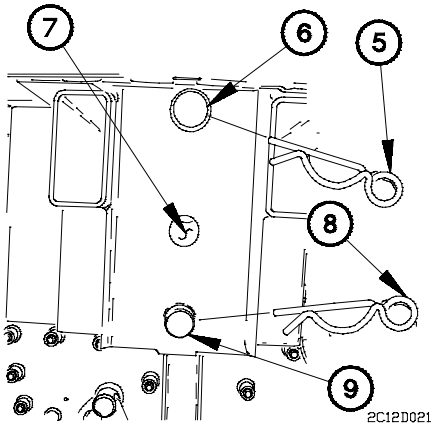

(4) Remove safety pin (5) from large pin (6) of slide assembly (7).

(5) Remove safety pin (8) from small pin (9) of slide assembly (7).

(6) Remove small pin (9) from slide assembly (7).

(7) Remove large pin (6) while holding slide assembly (7).

3-12. M1094 AIR DROP PREPARATION (CONT)

(8) Align small hole of slide assembly (7) with middle hole of slide assembly receptacle (4).

(9) Install small pin (9) in slide assembly (7) and slide assembly receptacle (4).

(10) Install large pin (6) in slide assembly (7) and slide assembly receptacle (4).

(11) Install two safety pins (5) and (8) in pins (6) and (9).

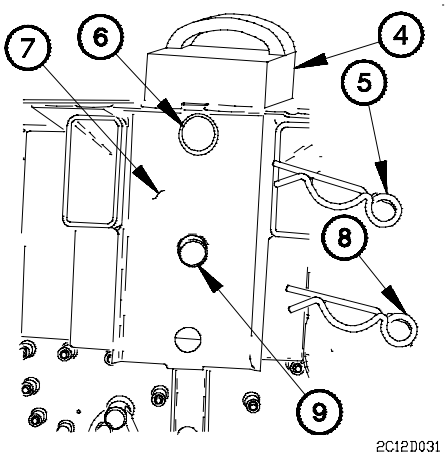

e. Load Spreader Installation.

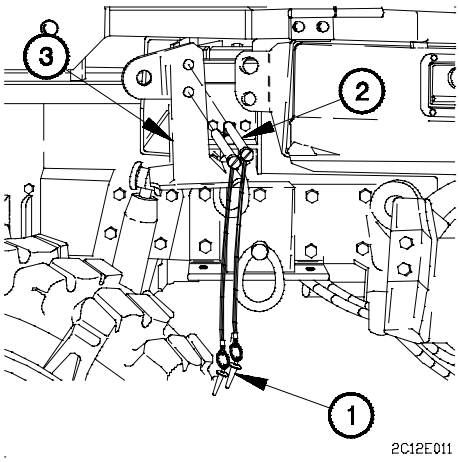

NOTE

- A load spreader is mounted on both sides of vehicle. Left side is shown.
- Steps (1) through (8) require the aid of an assistant.

(1) Remove two safety pins (1) from pins (2) on vehicle.

(2) Remove two pins (2) and front load spreader (3) from vehicle.

(3) Remove pin (4) and shackle (5) from front bumper (6).

(4) Install front load spreader (3) on front bumper (6) with two pins (2).

(5) Install two safety pins (1) in pins (2).

(6) Mount shackle (5) on front load spreader (3).

(7) Install pin (4) on front load spreader (3) and shackle (5) finger tight.

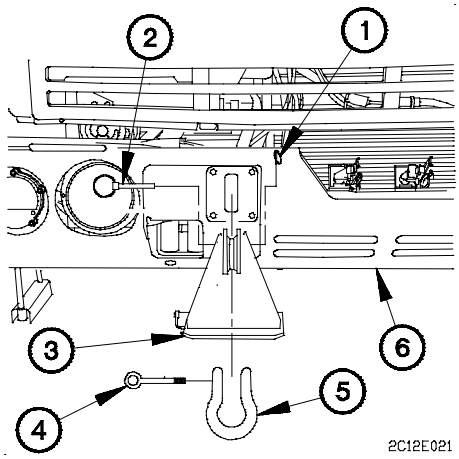

f. Follow-on Maintenance.

Remove wheel chocks (para 2-27h).

End of Task.

3-13. M1094 AIR DROP RECOVERY OPERATIONS

This task covers:

a. Cab Recovery
b. Spare Tire Recovery
c. Slide Assembly Recovery
d. Load Spreader Recovery
e. Follow-On Maintenance

INITIAL SETUP

Equipment Conditions
Vehicle parked on level ground.
Engine shut down (para 2-27f).
Wheels chocked (para 2-27h).

Tools and Special Tools
Wrench Assembly, Speedhandle (Item 24 (COEI), Appendix B).
Wrench, Adjustable, 8 in. (Item 50, Appendix B).

Tools and Special Tools (cont)
Strap Assembly (Item 23 (COEI), Appendix B)
Sling Assembly, Air Drop Roof (Item 22 (COEI), Appendix B)

References
FM 10-526

Personnel Required
(2)

a. Cab Recovery.

WARNING

Vehicle must not be operated until rear panel and side panels are raised and properly secured. Failure to comply may result in serious injury or death to personnel or damage to equipment.

NOTE

Steps (1) through (36) require the aid of an assistant.

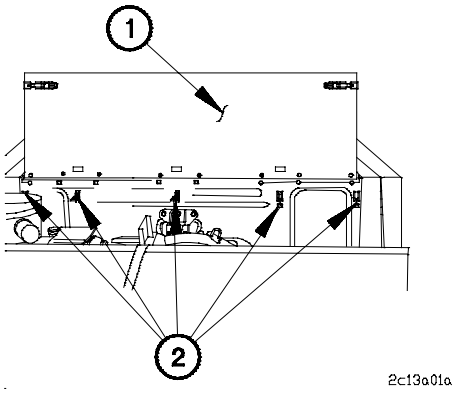

(1) Raise rear panel (1) and fasten five panel latches (2).

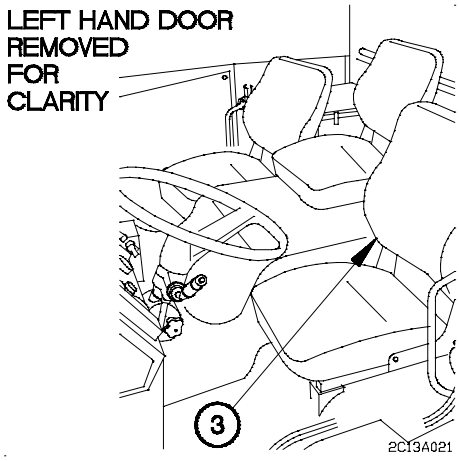

(2) Raise three seat backs (3).

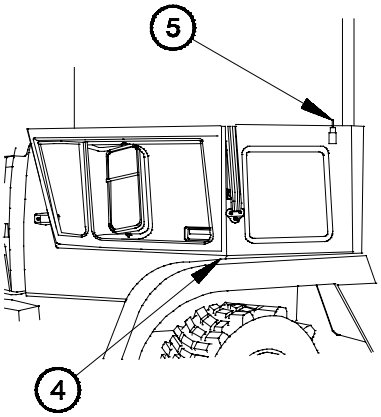

(3) Raise top half of two side panels (4) and fasten four side panel latches (5) on inside of vehicle.

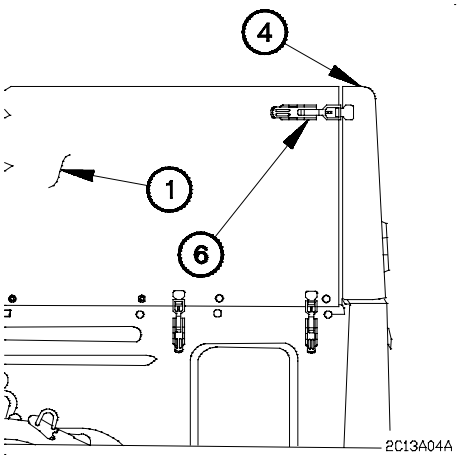

(4) Fasten two latches (6) to side panels (4) and rear panel (1) on outside of vehicle.

3-13. M1094 AIR DROP RECOVERY OPERATIONS (CONT)

NOTE

Left and right side captive bolts are attached the same way. Left side shown.

(5) Install captive bolt (7) in rear panel (1).

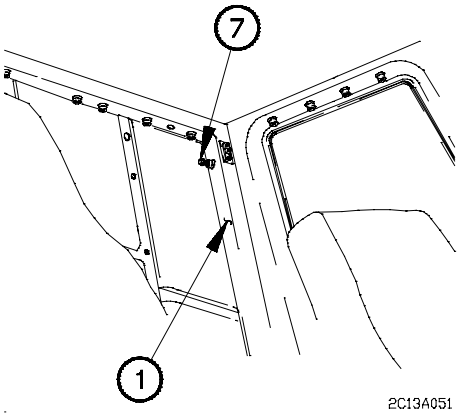

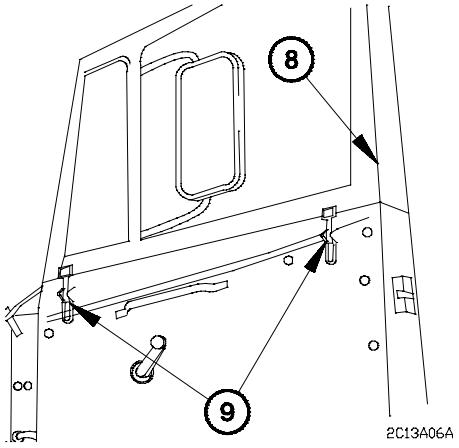

NOTE

Right side and left side doors are raised the same way. Right side shown.

(6) Raise top half of door (8) and fasten two latches (9).

(7) Raise windshield (10) and fasten two windshield latches (11).

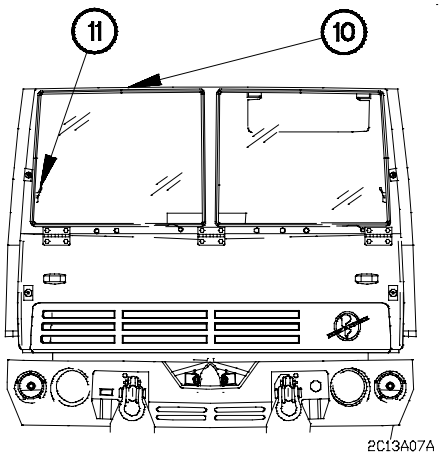

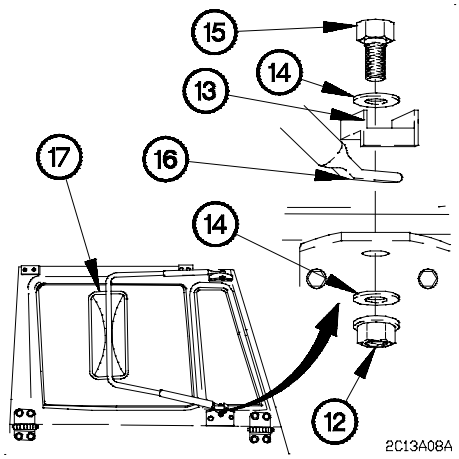

NOTE

Steps (8) through (11) apply to both sides of vehicle. Right side shown.

(8) Remove nut (12), clip (13), two washers (14), and screw (15) from mirror support (16).

(9) Unfold mirrors (17).

3-13. M1094 AIR DROP RECOVERY OPERATIONS (CONT)

(10) Install clip (13) between mirror support (16) and bracket (18).

(11) Install screw (15), two washers (14), and nut (12).

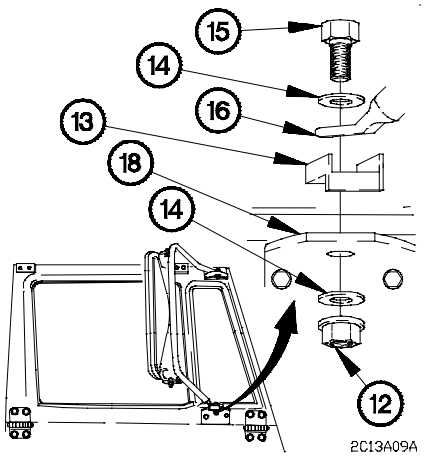

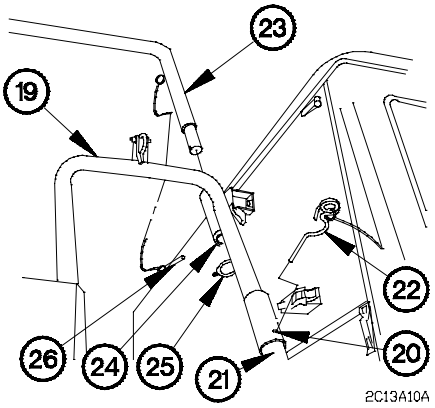

(12) Raise spare tire retainer lift arm (19) and align hole in collar (20) with hole in spare tire retainer (21).

(13) Install two safety pins (22) in spare tire retainer lift arm (19).

(14) Install davit (23) in sleeve (24) of spare tire retainer lift arm (19).

(15) Install safety washer (25) and safety pin (26) in bottom of davit (23).

WARNING

Cab roof weighs approximately 126 lbs (57 kgs). Use caution when handling cab roof. Failure to comply may result in injury to personnel or damage to equipment.

(16) Lift cab roof (27) and lower on front side of dump body (28) and spare tire (29).

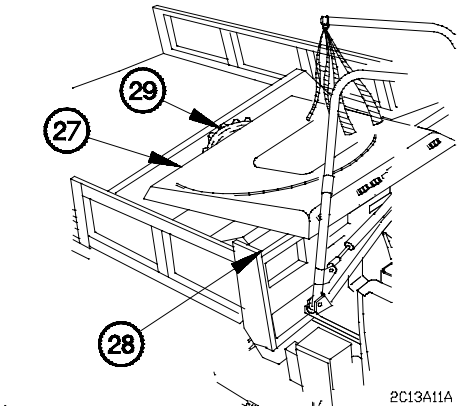

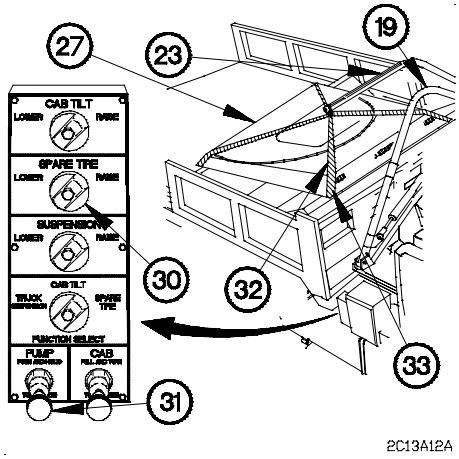

(17) Turn SPARE TIRE knob (30) to RAISE position.

NOTE

Use back-up hydraulic pump (para 2-52) if pressing PUMP knob does not accomplish step (18).

(18) Press and hold PUMP knob (31).

(19) Raise spare tire retainer lift arm (19) and davit (23) over center of cab roof (27).

(20) Connect lifting strap (32) to four brackets (33) on cab roof (27).

3-13. M1094 AIR DROP RECOVERY OPERATIONS (CONT)

(21) Connect lifting strap (32) to davit (23).

(22) Turn SPARE TIRE knob (30) to LOWER position.

NOTE

Use back-up hydraulic pump (para 2-52) if pressing PUMP knob does not accomplish step (23).

(23) Press and hold PUMP knob (31).

(24) Raise cab roof (27) until spare tire retainer lift arm (19) is straight up and down.

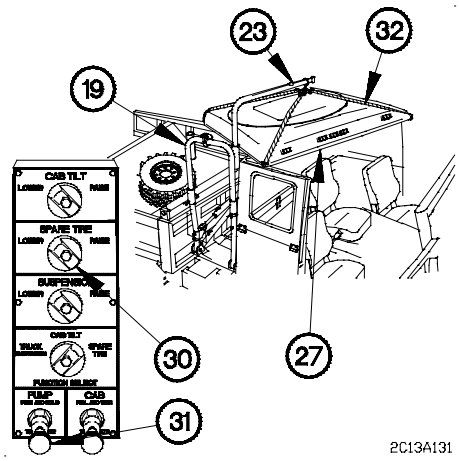

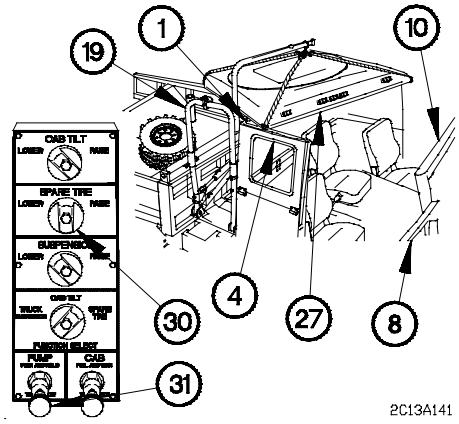

(25) Turn SPARE TIRE knob (30) mid-way between RAISE and LOWER position to lock spare tire retainer lift arm (19) in place.

NOTE

Use back-up hydraulic pump (para 2-52) if pressing PUMP knob does not accomplish step (26).

(26) Press and hold PUMP knob (31).

(27) Align cab roof (27) over rear panel (1), side panel (4), doors (8), and windshield (10).

(28) Turn SPARE TIRE knob (30) to LOWER position.

NOTE

Use back-up hydraulic pump (para 2-52) if pressing PUMP knob does not accomplish step (29).

(29) Press and hold PUMP knob (31).

(30) Move davit chain (34) inward to stop.

(31) Lower cab roof (27).

(32) Remove lifting strap (32) from four brackets (33).

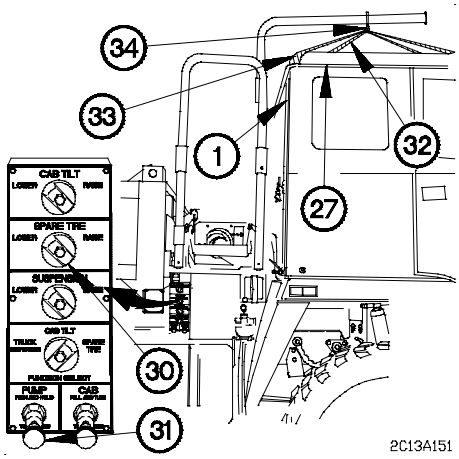

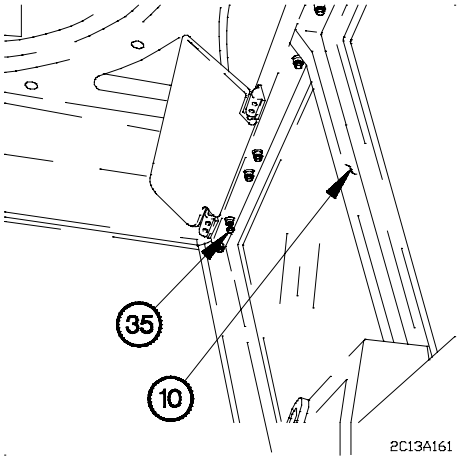

NOTE

Do not tighten captive bolts until all ten captive bolts are in position.

(33) Position ten captive bolts (35) on windshield (10).

(34) Tighten ten captive bolts (35).

3-13. M1094 AIR DROP RECOVERY OPERATIONS (CONT)

NOTE

Do not tighten captive bolts until all four captive bolts are in position.

(35) Position four captive bolts (36) on right side panel (4).

(36) Tighten four captive bolts (36).

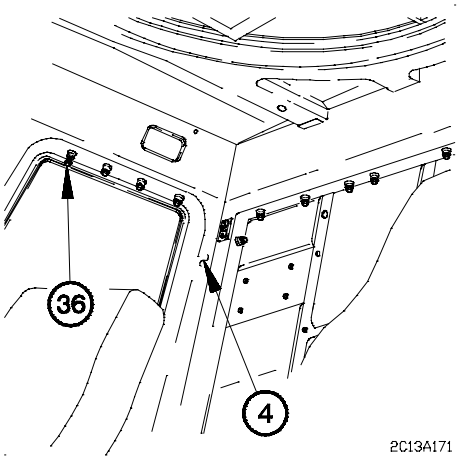

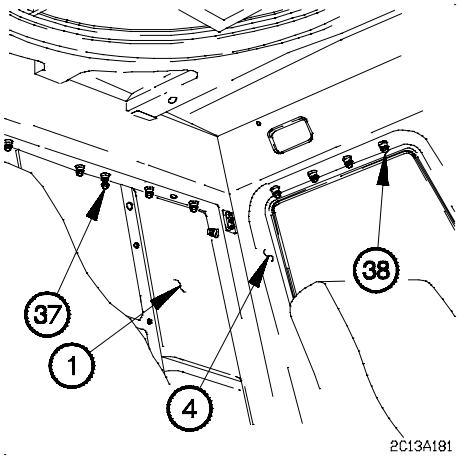

NOTE

Do not tighten captive bolts until all ten captive bolts are in position.

(37) Position ten captive bolts (37) on rear panel (1).

(38) Tighten ten captive bolts (37).

NOTE

Do not tighten captive bolts until all four captive bolts are in position.

(39) Position four captive bolts (38) on left side panel (4).

(40) Tighten captive bolts (38).

(41) Connect connector J3 (39) to connector P3 (40).

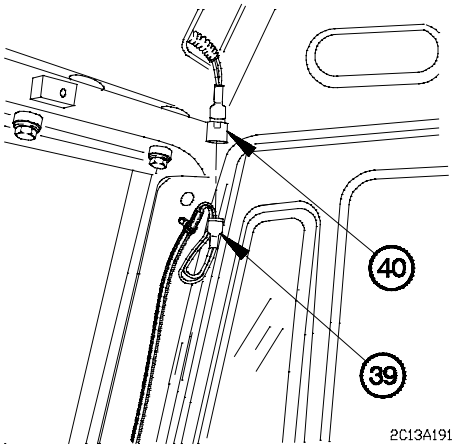

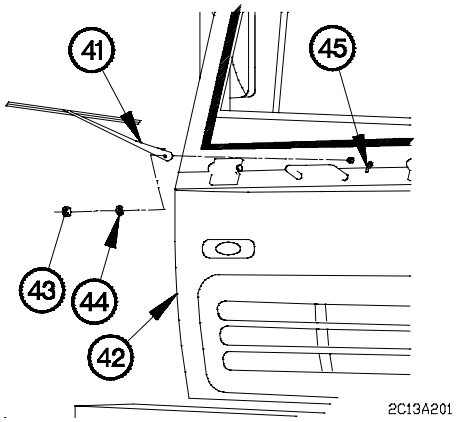

NOTE

Both windshield wiper arms are installed the same. Right side shown.

(42) Install windshield wiper arm (41) on cab (42) with lockwasher (43) and nut (44).

(43) Install windshield wiper tube (43) on windshield wiper arm (39).

3-13. M1094 AIR DROP RECOVERY OPERATIONS (CONT)

b. Spare Tire Recovery.

NOTE

Steps (1) through (18) require the aid of an assistant.

(1) Position davit (1) over spare tire (2) in cab protector (3).

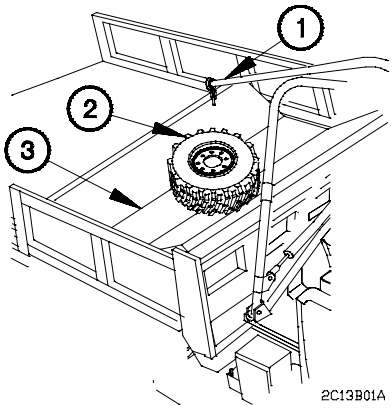

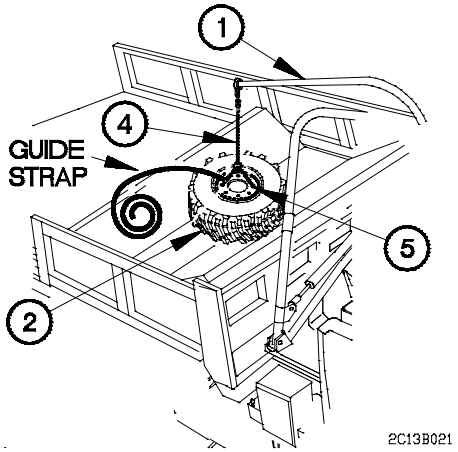

WARNING

Tire weighs approximately 350 lbs (159 kgs). Use extreme care when handling tire. Failure to comply may result in injury to personnel.

(2) Install chain (4) through two lug stud holes (5).

(3) Lower davit (1) and attach chain (4) to davit.

(4) Attach guide strap to spare tire (2).

(5) Attach chain (6) to hook (7) on spare tire retainer (8).

(6) Wrap other end of chain (6) around spare tire retainer lift arm (9) above hook (10) and hook chain back to itself.

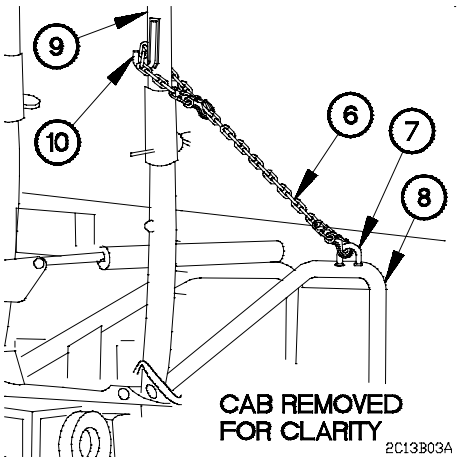

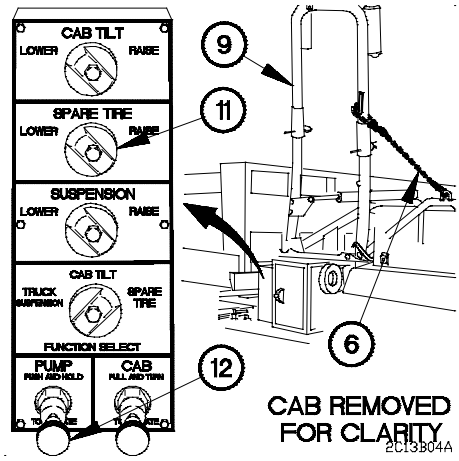

(7) Turn SPARE TIRE knob (11) to LOWER position.

NOTE

Use back-up hydraulic pump (para 2-52) if pressing PUMP knob does not accomplish step (8).

(8) Press and hold PUMP knob (12).

(9) Lower spare tire retainer lift arm (9) until tension is on chain (6).

3-13. M1094 AIR DROP RECOVERY OPERATIONS (CONT)

(10) Raise spare tire (2) until spare tire retainer lift arm (9) is aligned with right corner of cab (13).

(11) Turn SPARE TIRE knob (11) mid-way between RAISE and LOWER position to lock spare tire retainer lift arm (9) in place.

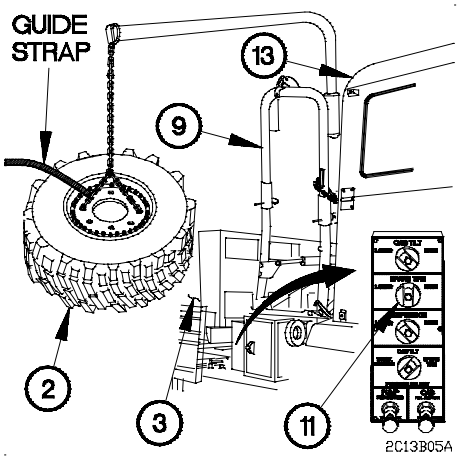

WARNING

Manifold operator must stand near hydraulic manifold and observe spare tire while spare tire is being lowered from dump body. Spare tire will gain momentum as it is being released. Failure to comply may result in serious injury or death to personnel.

NOTE

Guide person should guide spare tire off dump body while standing on ground.

(12) Swing spare tire (2) off cap protector (3).

(13) Turn SPARE TIRE knob (11) to RAISE position.

NOTE

Use back-up hydraulic pump (para 2-52) if pressing PUMP knob does not accomplish step (14).

(14) Press and hold PUMP knob (12) until chain (6) is slack.

(15) Remove chain (6) from hook (7) and from spare tire retainer lift arm (9).

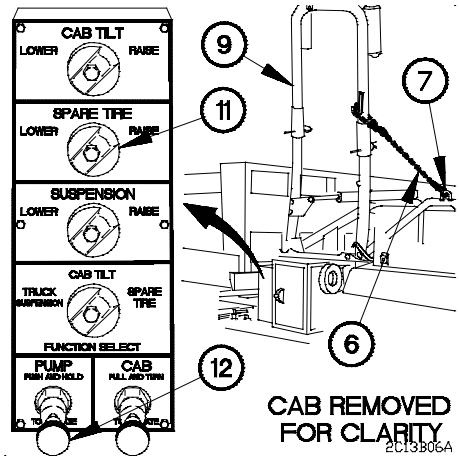

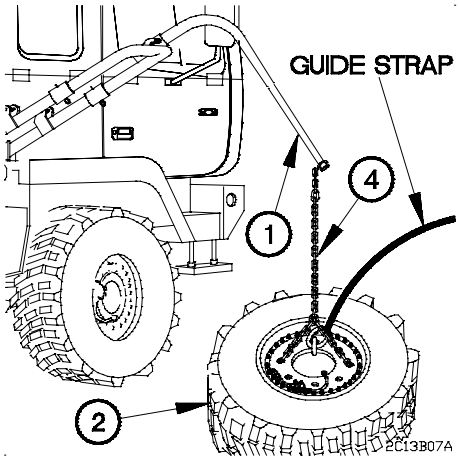

(16) Lower spare tire (2) to the ground.

(17) Remove guide strap from spare tire (2).

(18) Remove chain (4) from davit (1) and spare tire (2).

(19) Remove safety pin (14) and safety washer (15) from davit (1).

(20) Remove davit (1) from sleeve (16) on spare tire retainer lift arm (9).

(21) Install safety washer (15) and safety pin (14) on bottom of davit (1).

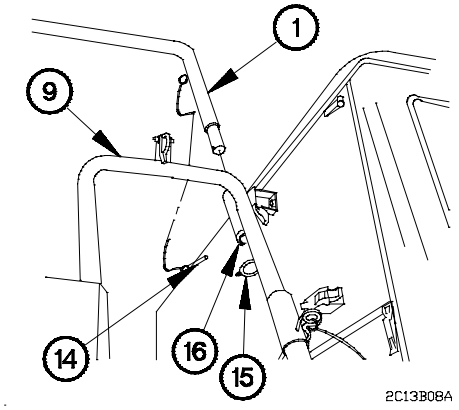

3-13. M1094 AIR DROP RECOVERY OPERATIONS (CONT)

(22) Install air intake adapter (17) on intake air cleaner housing (18) with clamp (19).

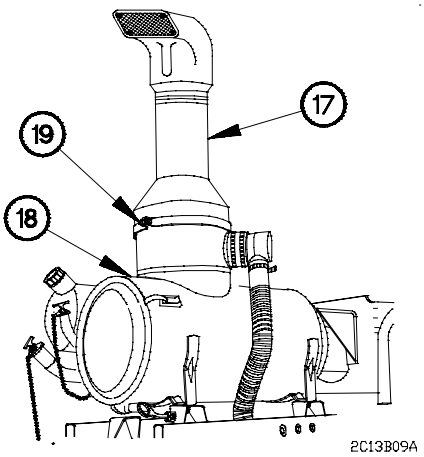

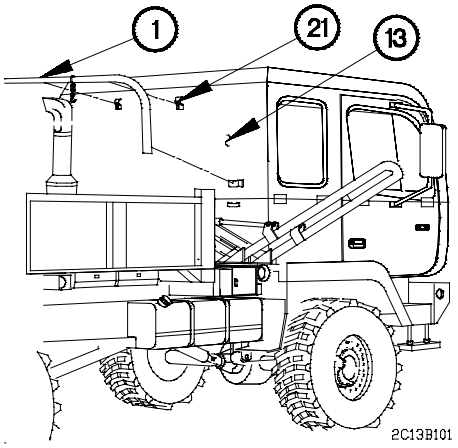

(23) Secure davit (1) on back of cab (13) and with three clamps (21).

(24) Stow spare tire (para 3-5d).

c. Slide Assembly Recovery.

NOTE

Steps (1) through (10) require the aid of an assistant.

(1) Remove safety pins (1) from large pin (2) and small pin (3).

(2) Remove small pin (3) from middle hole of slide assembly receptacle (4).

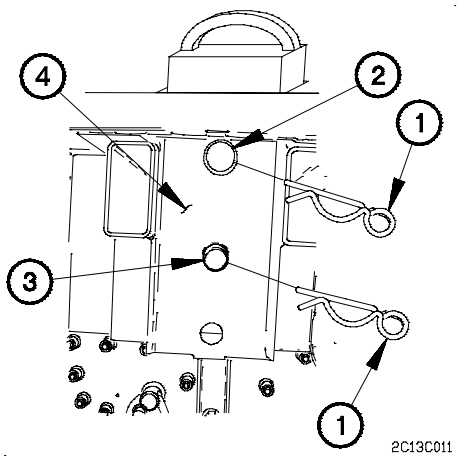

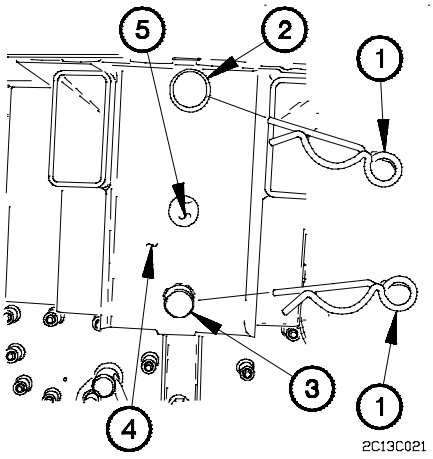

(3) Remove large pin (2) from slide assembly (5).

(4) Lower slide assembly (5) in slide assembly receptacle (4).

(5) Install small pin (3) in bottom hole of slide assembly receptacle (4) and slide assembly (5).

(6) Install large pin (2) in large hole of slide assembly receptacle (4).

(7) Install two safety pins (1) in large pin (2) and small pin (3).

3-13. M1094 AIR DROP RECOVERY OPERATIONS (CONT)

(8) Install cover plate assembly (6) in slide assembly receptacle (4) in dump body (7).

(9) Install retaining bar (8) on rod of cover plate assembly (6).

(10) Install wing nut (9) on rod of cover plate assembly (6).

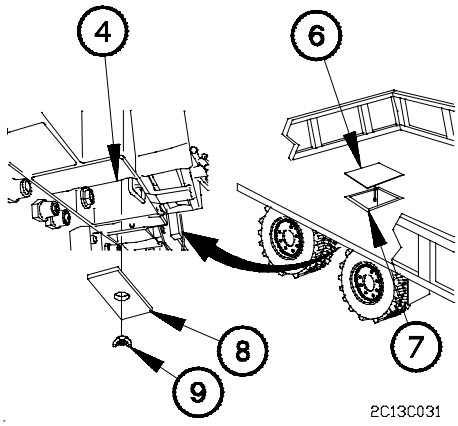

d. Load Spreader Recovery.

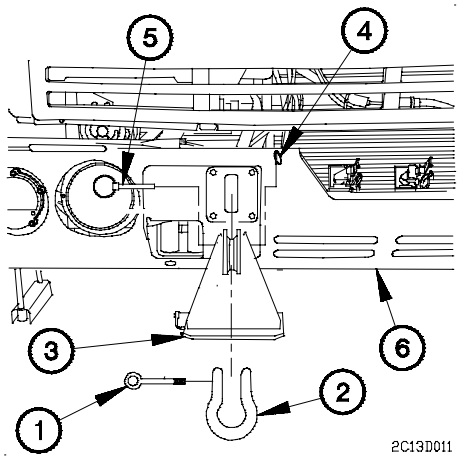

NOTE

- Both left and right side load spreaders are the same way. Right side shown.
- Steps (1) through (5) require the aid of an assistant.

(1) Remove pin (1) and shackle (2) from front load spreader (3).

(2) Remove two safety pins (4), two pins (5), and front load spreader (3) from front bumper (6).

(3) Install shackle (2) and pin (1) on front bumper (6).

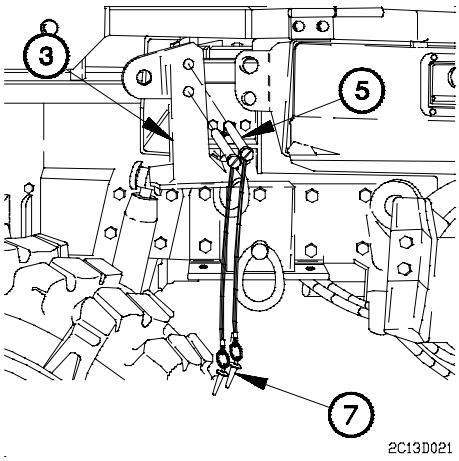

(4) Position front load spreader (3) with two pins (5) on stowage location on vehicle.

(5) Install two safety pins (7) on two pins (5).

e. Follow-On Maintenance.

(1) Notify Unit Maintenance to torque air instake adapter clamp in accordance with maintenance paragraph.

(2) Raise cab protector (para 2-38b).

(3) Remove wheel chocks (para 2-27h).

(4) Notify Unit Maintenance to tighten nut on mirrors to 21-27 lb-ft (29-37 N·m).

End of Task.

3-14. M1083/M1093 TROOPSEAT KIT INSTALLATION/REMOVAL

This task covers:

a. Installation

b. Removal

INITIAL SETUP

Equipment Conditions
Engine shut down (para 2-27f).

Tools and Special Tools (Cont)
Screwdriver, Flattip (Item 38, Appendix B)
Wrench, Adjustable, 8 in. (Item 50, Appendix B)

Personnel Required
(2)

a. Installation.

NOTE

Left and right side bolts are installed in cargo bed stakes the same way. Right side shown.

(1) Position bolt (1) in center cargo bed stake (2).

(2) Position bolt (3) in rear cargo bed stake (4).

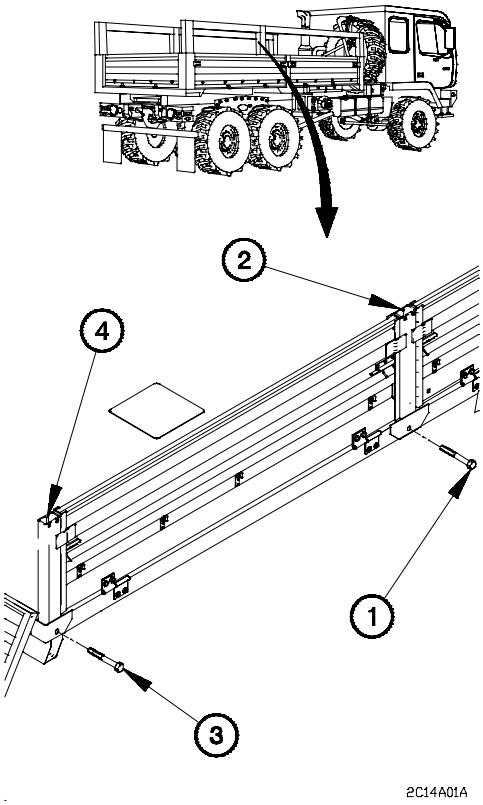

CAUTION

Ensure seat post is flush with cargo bed floor prior to tightening bolts. Failure to comply may result in damage to equipment.

NOTE

- Left and right troopseats are installed the same way. Right side shown.
- Steps (3) through (21) require the aid of an assistant.

(3) Attach front seat post (5) to front cargo bed stake (6) with two bolts (7).

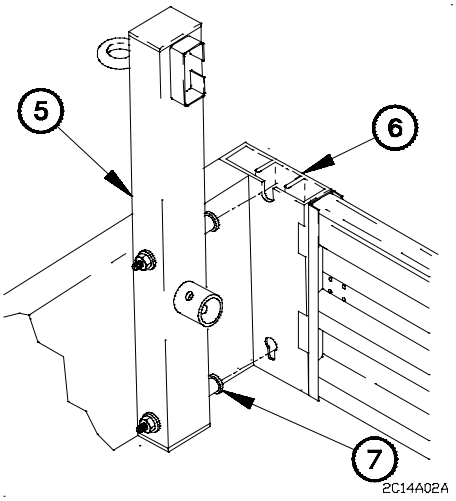

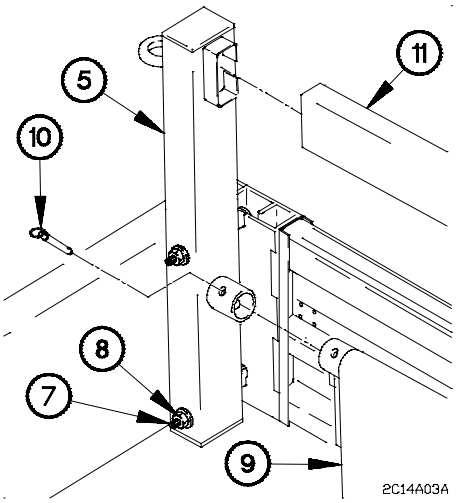

(4) Hold bolts (7) with screwdriver.

(5) Install two nuts (8) on bolts (7).

(6) Install front seats (9) on front seat post (5).

(7) Insert quick release pin (10) in front seats (9).

(8) Install backrest (11) on front seat post (5).

3-14. M1083/M1093 TROOPSEAT KIT INSTALLATION/REMOVAL (CONT)

(9) Install center seat post (12) on backrest (11) and front seats (9).

(10) Insert quick release pin (13) in front seats (9).

(11) Attach center seat post (12) to center cargo bed stake (2) with two bolts (14).

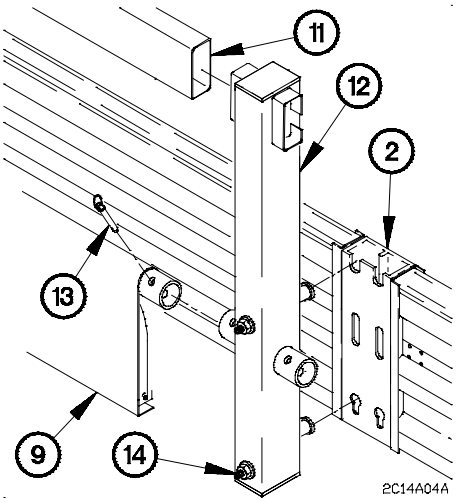

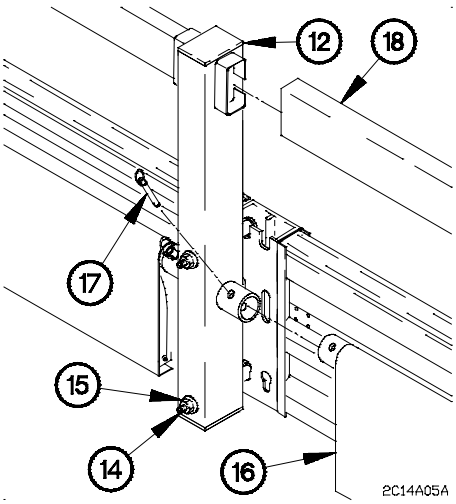

(12) Hold bolts (14) with screwdriver.

(13) Install two nuts (15) on bolts (14).

(14) Install rear seats (16) on center seat post (12).

(15) Insert quick release pin (17) in rear seats (16).

(16) Install backrest (18) on center seat post (12).

(17) Install rear seat post (19) on backrest (18) and rear seats (16).

(18) Insert quick release pin (20) in rear seats (16).

(19) Attach rear seat post (19) to rear cargo bed stake (4) with two bolts (21).

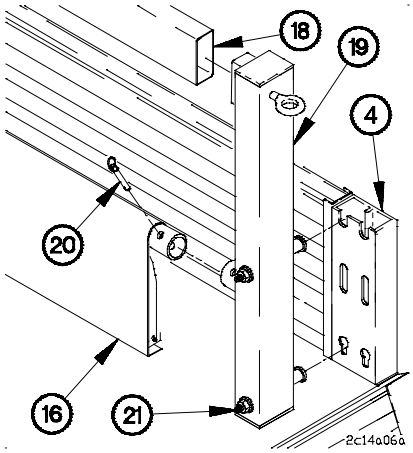

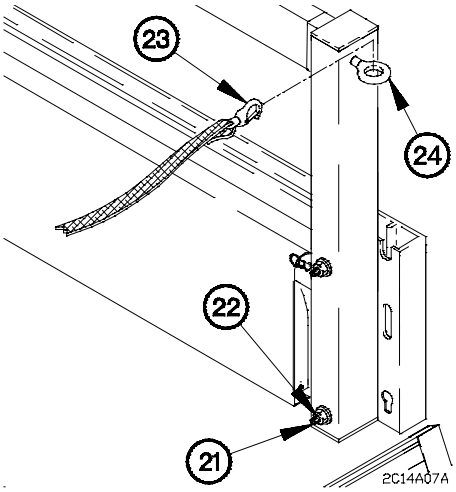

(20) Hold bolts (21) with screwdriver.

(21) Install two nuts (22) on bolts (21).

NOTE

Eyebolts are located on all corner seat posts. Right rear eyebolt shown.

(22) Connect safety strap hook (23) in eyebolt (24).

3-14. M1083/M1093 TROOPSEAT KIT INSTALLATION/REMOVAL (CONT)

(23) Install alarm bracket (25) on cargo bed (26) with two knobs (27).

(24) Notify Unit Maintenance to install troop transport alarm cable assembly.

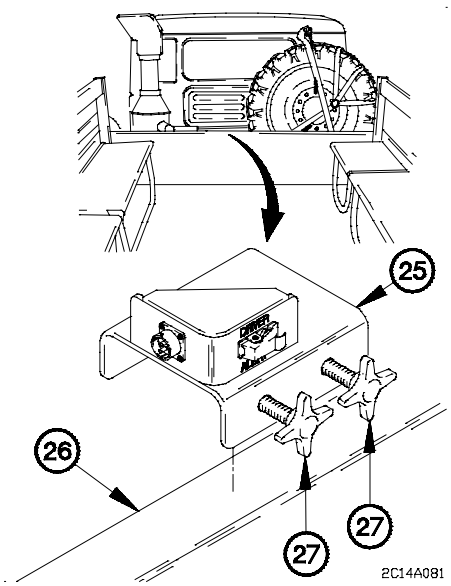

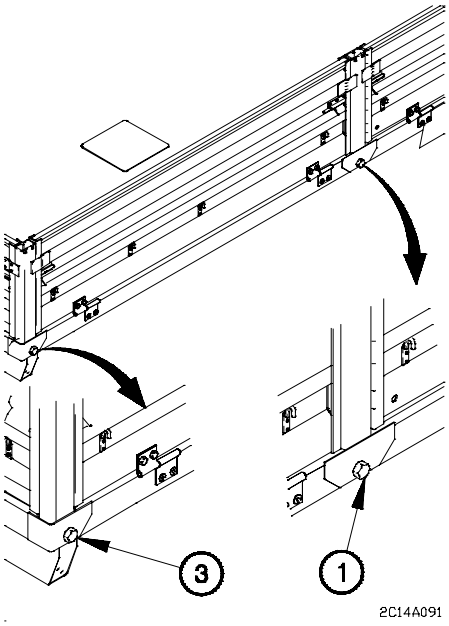

(25) Notify Unit Maintenance to tighten bolt (1) and bolt (3) to 46-57 lb-ft (62-77 N·m).

b. Removal.

(1) Notify Unit Maintenance to remove troop transport alarm cable assembly.

(2) Loosen two knobs (1) on alarm bracket (2).

(3) Remove alarm bracket (2) from cargo bed (3).

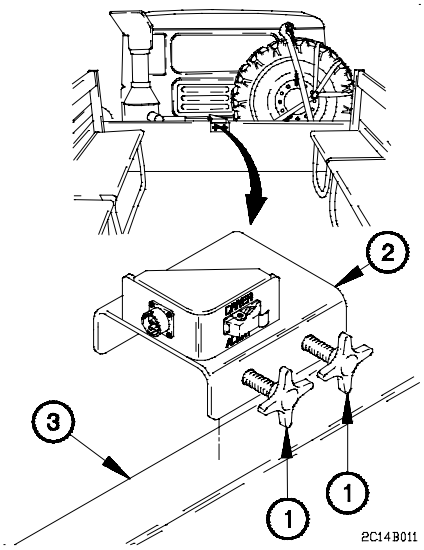

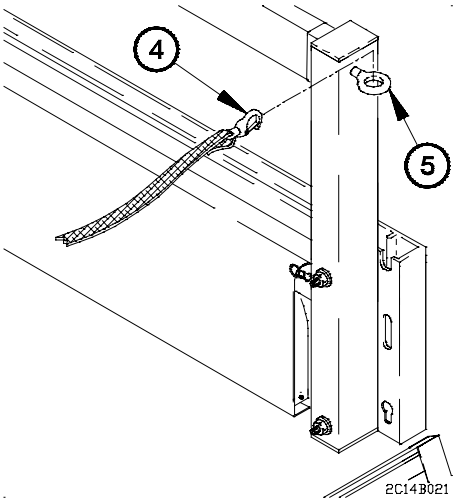

NOTE

- Left and right troopseats are removed the same way. Right side shown.
- Eyebolts are located on all corner seat posts. Right rear eyebolts shown.

(4) Remove safety strap hook (4) from eyebolt (5).

3-14. M1083/M1093 TROOPSEAT KIT INSTALLATION/REMOVAL (CONT)

NOTE

Steps (5) through (24) require the aid of an assistant.

(5) Remove quick release pin (6) from rear seats (7).

NOTE

Loosen nuts enough to remove seat post from stake.

(6) Hold two bolts (8) with screwdriver.

(7) Loosen two nuts (9) on bolts (8).

(8) Remove seat post (10) from rear cargo bed stake (11), backrest (12), and rear seats (7).

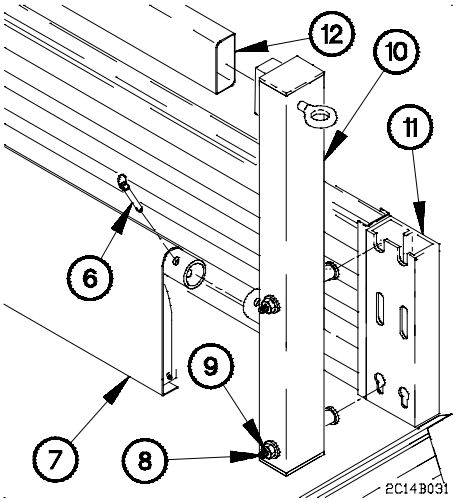

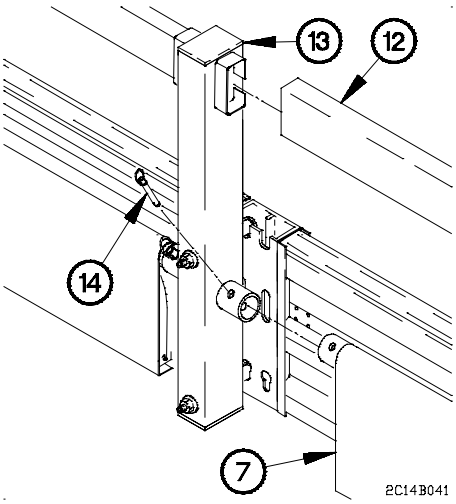

(9) Remove backrest (12) from center seat post (13).

(10) Remove quick release pin (14) from rear seats (7).

(11) Remove rear seats (7) from center seat post (13).

NOTE

Loosen nuts enough to remove seat post from stake.

(12) Hold two bolts (15) with screwdriver.

(13) Loosen two nuts (16) on bolts (15).

(14) Remove center seat post (13) from center cargo bed stake (17).

(15) Remove quick release pin (18) from front seats (19).

(16) Remove center seat post (13) from backrest (20) and front seats (19).

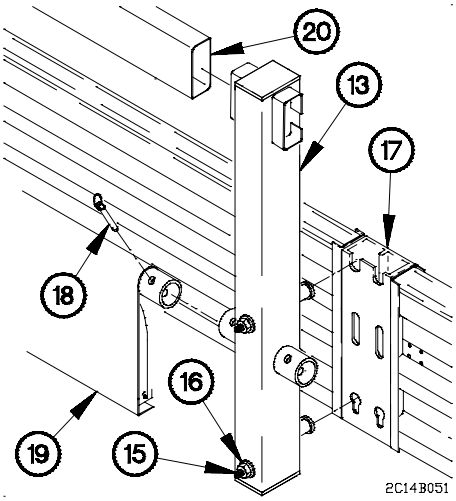

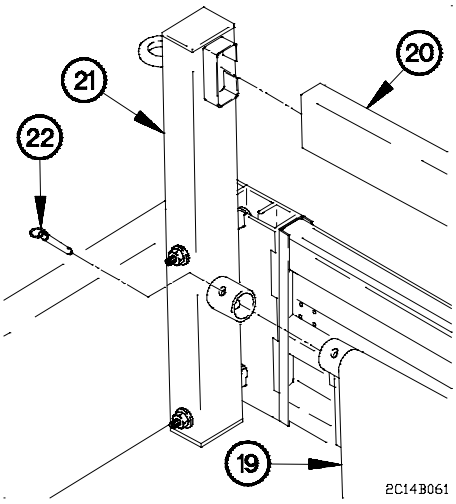

(17) Remove backrest (20) from front seat post (21).

(18) Remove quick release pin (22) from front seats (19).

(19) Remove front seats (19) from front seat post (21).

3-14. M1083/M1093 TROOPSEAT KIT INSTALLATION/REMOVAL (CONT)

(20) Hold two bolts (23) with screwdriver.

(21) Loosen two nuts (24) on bolts (23).

(22) Remove front seat post (21) from front cargo bed stake (25).

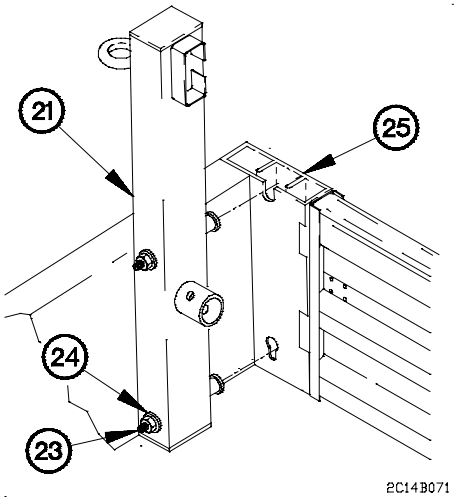

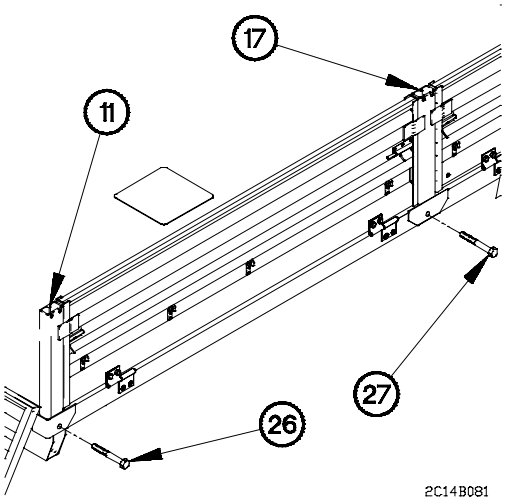

NOTE

Left and right side bolts are removed from cargo bed stakes the same way. Right side shown.

(23) Remove bolt (26) from rear cargo bed stake (11).

(24) Remove bolt (27) from center cargo bed stake (17).

End of Task.

3-15. M1085 TROOPSEAT KIT INSTALLATION/REMOVAL

This task covers:

a. Installation

b. Removal

INITIAL SETUP

Equipment Conditions
Engine shut down (para 2-27f).

Tools and Special Tools
Screwdriver, Flattip (Item 38, Appendix B)

Tools and Special Tools (Cont)
Wrench, Adjustable, 8 in. (Item 50, Appendix B)

Personnel Required
(2)

a. Installation.

NOTE

- Left and right side bolts are installed in cargo bed stakes the same way. Right side shown.
- Steps (1) through (33) require the aid of an assistant.

(1) Position bolt (1) in front center cargo bed stake (2).

(2) Position bolt (3) in rear center cargo bed stake (4).

(3) Position bolt (5) in rear cargo bed stake (6).

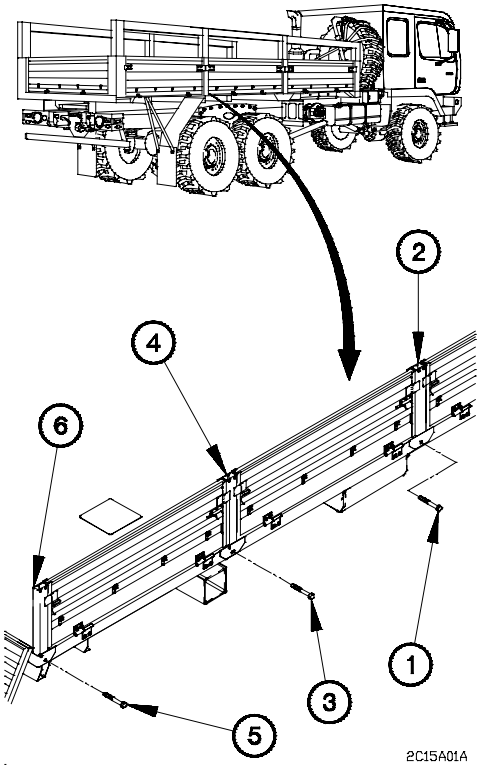

3-15. M1085 TROOPSEAT KIT INSTALLATION/REMOVAL (CONT)

CAUTION

Ensure seat post is flush with cargo bed floor prior to tightening bolts. Failure to comply may result in damage to equipment.

NOTE

- There are six sets of seats. The two rear sets have two long seat panels.
- Left and right troopseats are installed the same way. Right side shown.

(4) Attach front seat post (7) to front cargo bed stake (8) with two bolts (9).

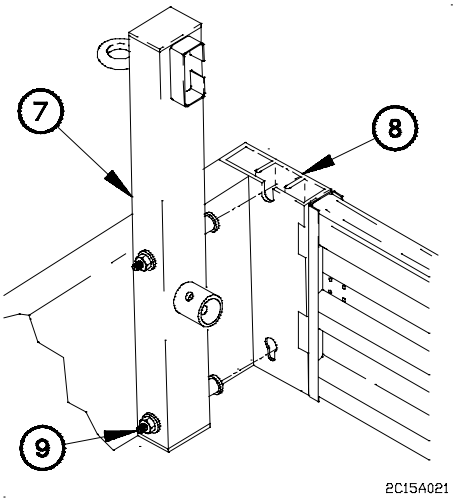

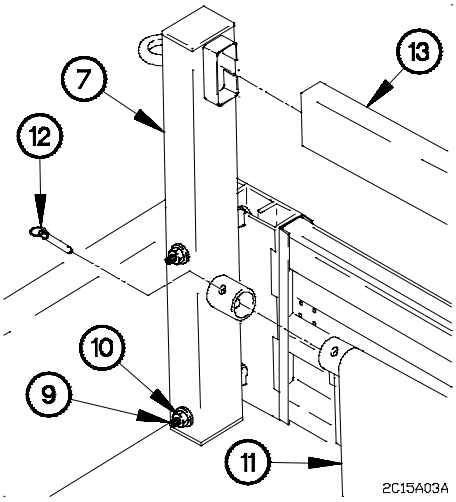

(5) Hold bolts (9) with screwdriver.

(6) Install two nuts (10) on bolts (9).

(7) Install front seats (11) on front seat post (7).

(8) Insert quick release pin (12) in front seats (11).

(9) Install backrest (13) on front seat post (7).

(10) Install front seats (11) on front center seat post (14).

(11) Install backrest (13) on front center seat post (14).

(12) Insert quick release pin (15) in front seats (11).

(13) Attach front center seat post (14) to front center cargo bed stake (2) with two bolts (16).

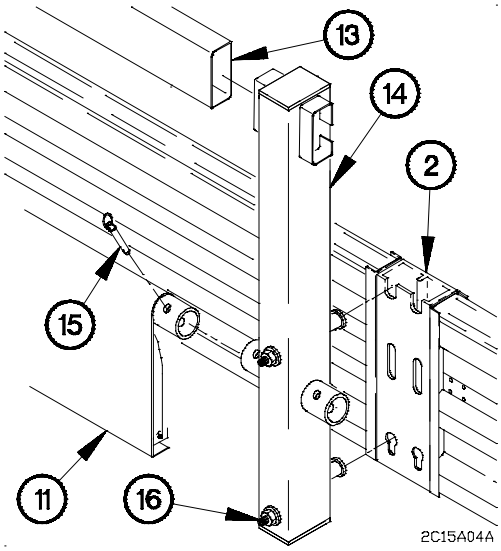

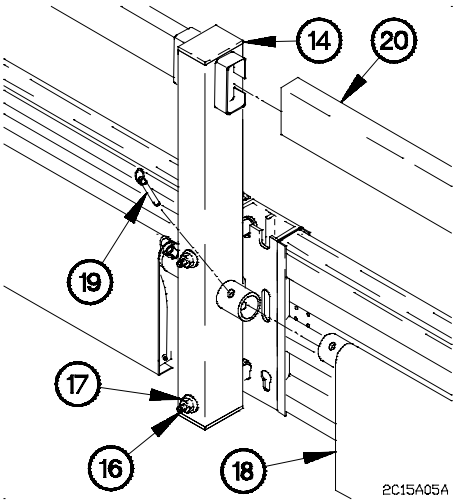

(14) Hold two bolts (16) with screwdriver.

(15) Install two nuts (17) on bolts (16).

(16) Install center seats (18) on front center seat post (14).

(17) Insert quick release pin (19) in center seats (18).

(18) Install center backrest (20) on front center seat post (14).

3-15. M1085 TROOPSEAT KIT INSTALLATION/REMOVAL (CONT)

(19) Install center seats (18) on rear center seat post (21).

(20) Install center backrest (20) on rear center seat post (21).

(21) Insert quick release pin (22) in center seats (18).

(22) Install rear center seat post (21) on rear center cargo bed stake (4) with two bolts (23).

(23) Hold two bolts (23) with screwdriver.

(24) Install two nuts (24) on bolts (23).

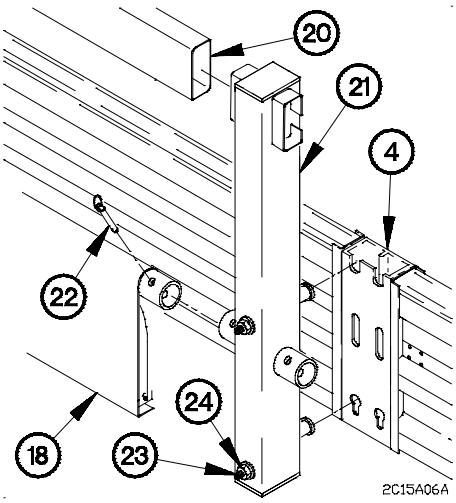

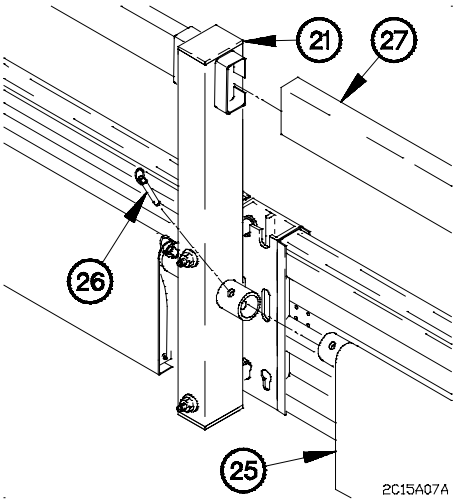

(25) Install rear seats (25) on rear center seat post (21).

(26) Insert quick release pin (26) in rear seats (25).

(27) Install rear backrest (27) on rear center seat post (21).

(28) Install rear seats (25) on rear seat post (28).

(29) Install rear backrest (27) on rear seat post (28).

(30) Insert quick release pin (29) in rear seats (25).

(31) Install rear seat post (28) to rear cargo bed stake (6) with two bolts (30).

(32) Hold two bolts (30) with screwdriver.

(33) Install two nuts (31) on bolts (30).

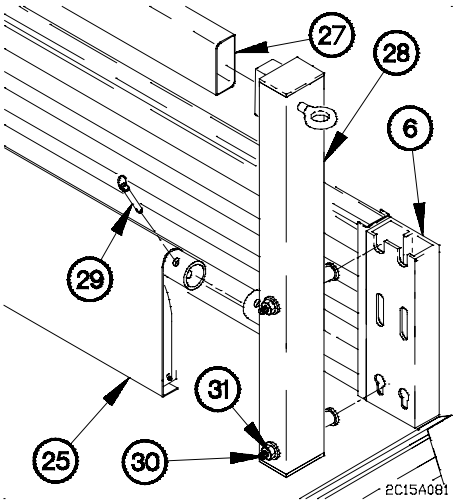

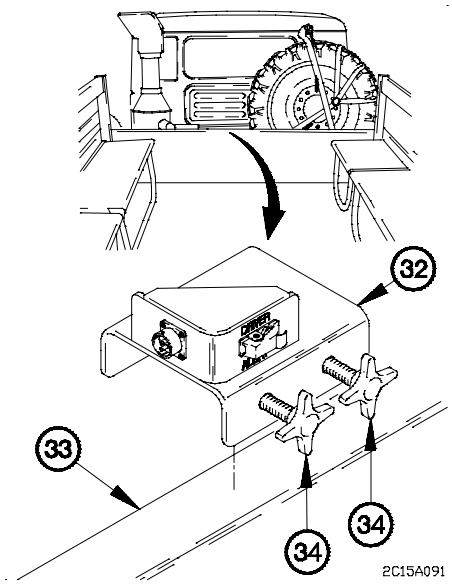

(34) Install alarm bracket (32) on cargo bed (33) with two knobs (34).

(35) Notify Unit Maintenance to install troop transport alarm cable assembly.

3-15. M1085 TROOPSEAT KIT INSTALLATION/REMOVAL (CONT)

NOTE

Eyebolts are located on all corner seat posts. Right rear eyebolt shown.

(36) Connect safety strap hook (35) in eyebolt (36).

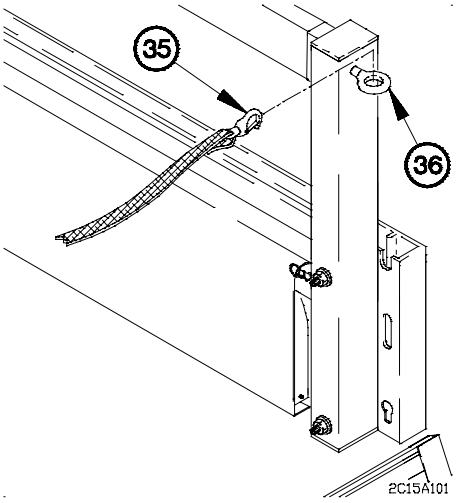

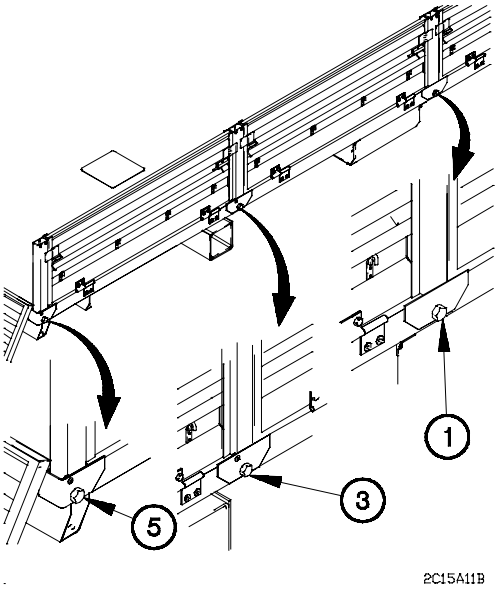

(37) Notify Unit Maintenance to tighten bolt (1), bolt (3), and bolt (5), to 46-57 lb-ft (62-77 N·m).

b. Removal.

(1) Notify Unit Maintenance to remove troop transport alarm cable assembly.

(2) Loosen two knobs (1) on alarm bracket (2).

(3) Remove alarm bracket (2) from cargo bed (3).

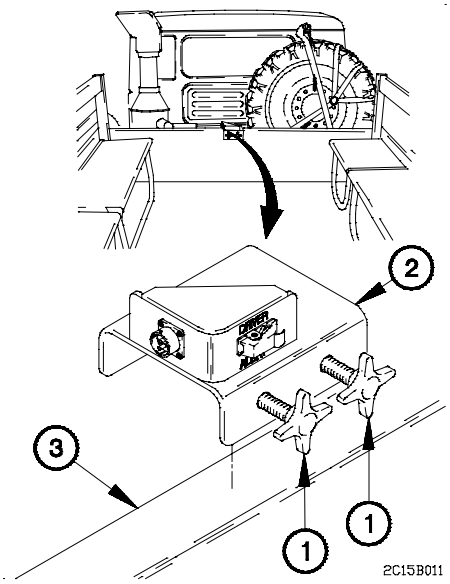

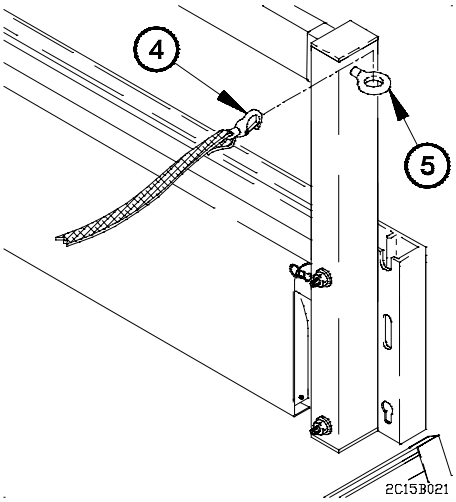

NOTE

- Right and left side troopseats are removed the same way. Right side shown.
- Eyebolts are located on all corner seat posts. Right rear eyebolt shown.

(4) Remove safety strap hook (4) from eyebolt (5).

3-15. M1085 TROOPSEAT KIT INSTALLATION/REMOVAL (CONT)

NOTE

Steps (5) through (30) require the aid of an assistant.

(5) Remove quick release pin (6) from rear seats (7).

(6) Hold two bolts (8) with screwdriver.

(7) Loosen two nuts (9) on bolts (8).

(8) Remove rear seat post (10) from rear cargo bed stake (11), rear backrest (12), and rear seats (7).

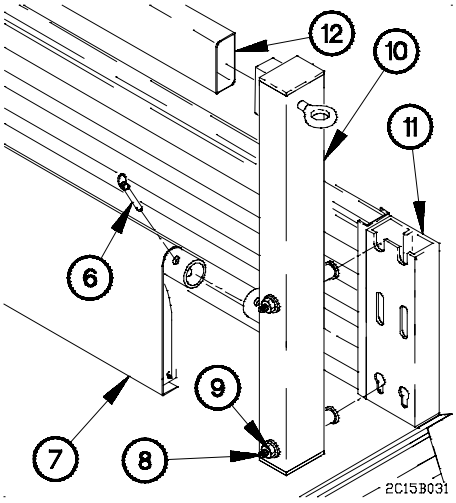

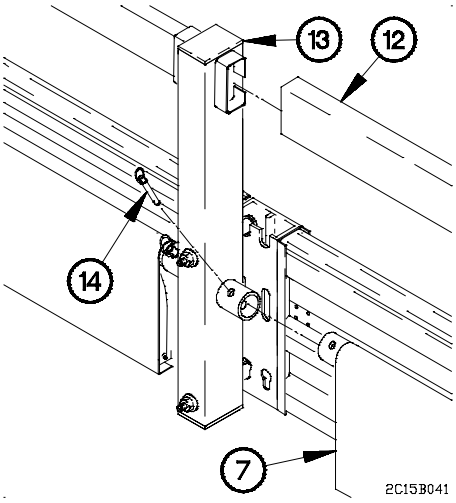

(9) Remove rear backrest (12) from rear center seat post (13).

(10) Remove quick release pin (14) from rear seats (7).

(11) Remove rear seats (7) from rear center seat post (13).

(12) Hold two bolts (15) with screwdriver.

(13) Loosen two nuts (16) on bolts (15).

(14) Remove rear center seat post (13) from rear center cargo bed stake (17).

(15) Remove quick release pin (18) from center seats (19).

(16) Remove rear center seat post (13) from center backrest (20) and center seats (19).

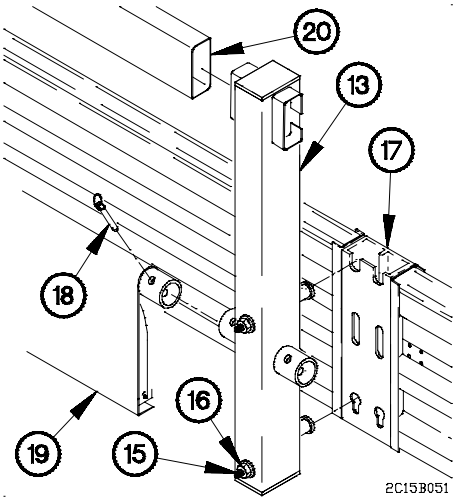

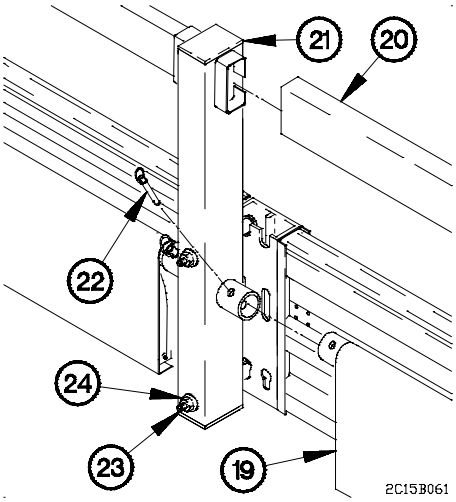

(17) Remove center backrest (20) from front center seat post (21).

(18) Remove quick release pin (22) from center seats (19).

(19) Remove center seats (19) from front center seat post (21).

(20) Hold two bolts (23) with screwdriver.

(21) Loosen two nuts (24) on bolts (23).

3-15. M1085 TROOPSEAT KIT INSTALLATION/REMOVAL (CONT)

(22) Remove front center seat post (21) from front center cargo bed stake (25).

(23) Remove quick release pin (26) from front seats (27).

(24) Remove front center seat post (21) from front backrest (28) and front seats (27).

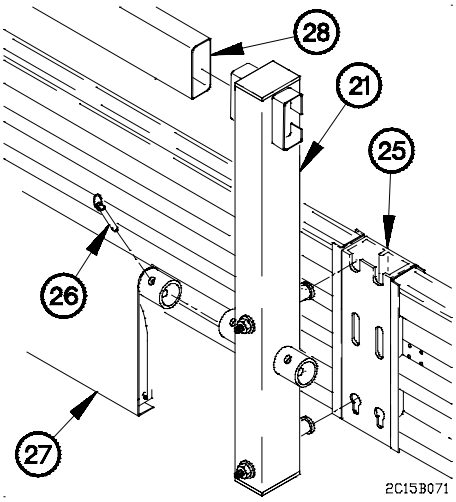

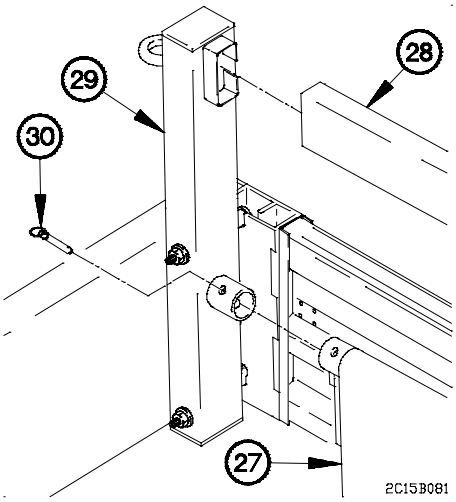

(25) Remove front backrest (28) from front seat post (29).

(26) Remove quick release pin (30) from front seats (27).

(27) Remove front seats (27) from front seat post (29).

(28) Hold two bolts (31) with screwdriver.

(29) Loosen two nuts (32) on bolts (31).

(30) Remove front seat post (29) from front cargo bed stake (33).

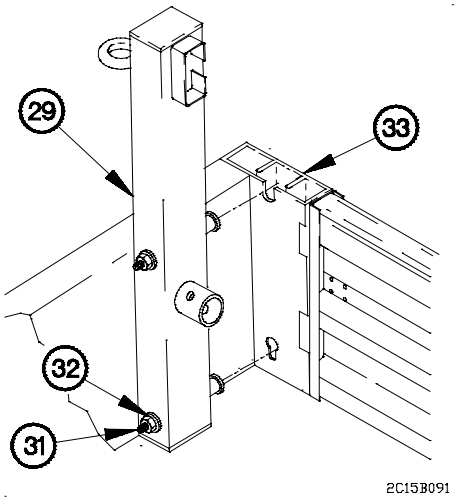

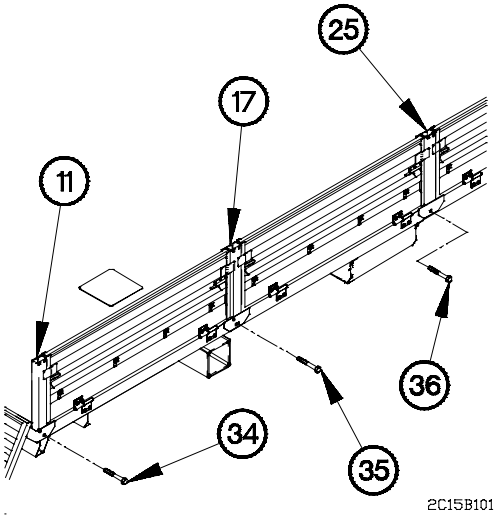

NOTE

Left and right bolts are removed from cargo bed stakes the same way. Right side shown.

(31) Remove bolt (34) from rear cargo bed stake (11).

(32) Remove bolt (35) from rear center cargo bed stake (17).

(33) Remove bolt (36) from front center cargo bed stake (25).

End of Task.

3-16. M1090/M1094 TROOPSEAT KIT INSTALLATION/REMOVAL

This task covers:

a. Installation

b. Removal

INITIAL SETUP

Equipment Conditions
Engine shut down (para 2-27f).

Tools and Special Tools (Cont)
Screwdriver, Flattip (Item 38, Appendix B)
Wrench, Adjustable, 8 in. (Item 50, Appendix B)

Personnel Required
(2)

a. Installation.

CAUTION

Ensure seat post is flush with dump body floor prior to tightening bolts. Failure to comply may result in damage to equipment.

NOTE

- Left and right troopseats are installed the same way. Left side shown.
- Steps (1) through (17) require the aid of an assistant.

(1) Install three dump body stakes (1) in dump body (2).

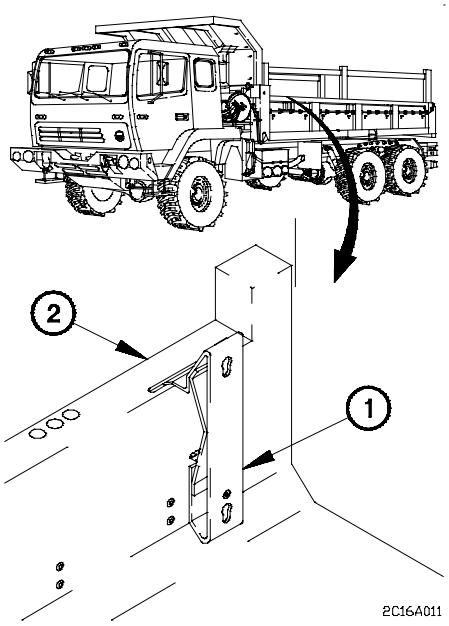

(2) Attach front seat post (3) to front dump body stake (1) with two bolts (4).

(3) Hold two bolts (4) and install nuts (5).

(4) Install front seats (6) on front seat post (3).

(5) Insert quick release pin (7) in front seats (6).

(6) Install backrest (8) on front seat post (3).

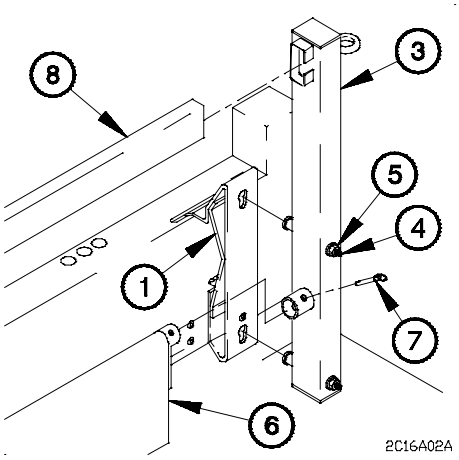

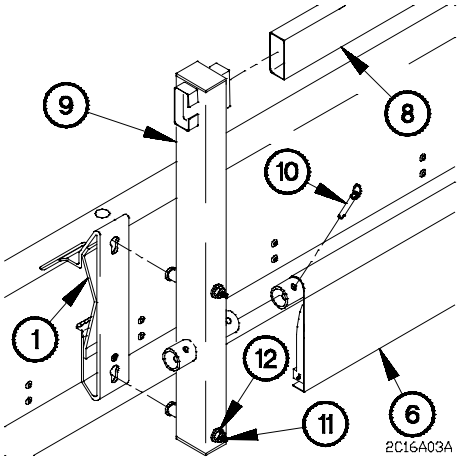

(7) Install center seat post (9) on backrest (8) and front seats (6).

(8) Insert quick release pin (10) in front seats (6).

(9) Attach center seat post (9) to center dump body stake (1) with two bolts (11).

(10) Hold two bolts (11) with screwdriver and install nuts (12).

3-16. M1090/M1094 TROOPSEAT KIT INSTALLATION/REMOVAL (CONT)

(11) Install rear seats (13) on center seat post (9).

(12) Insert quick release pin (14) in rear seats (13).

(13) Install backrest (15) on center seat post (9).

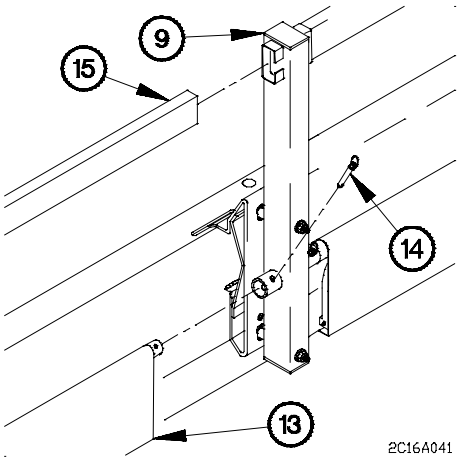

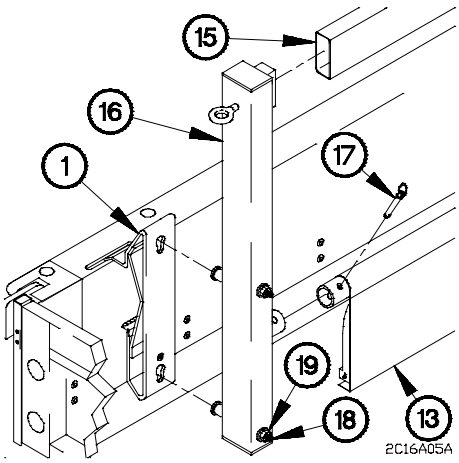

(14) Install rear seat post (16) on backrest (15) and rear seats (13).

(15) Insert quick release pin (17) in rear seats (13).

(16) Attach rear seat post (16) to rear dump body stake (1) with two bolts (18).

(17) Hold two bolts (18) with screwdriver and install nuts (19).

NOTE

Eyebolts are located on all corner seat posts. Left rear eyebolt shown.

(18) Connect safety strap hook (20) in eyebolt (21).

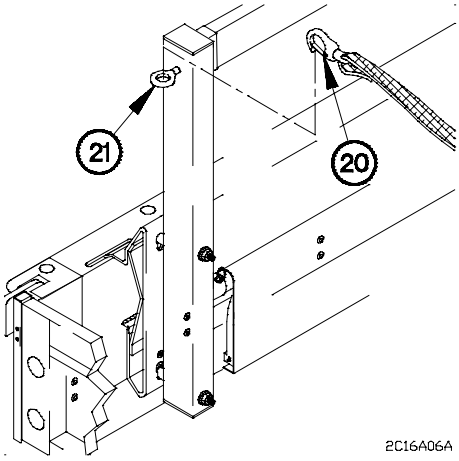

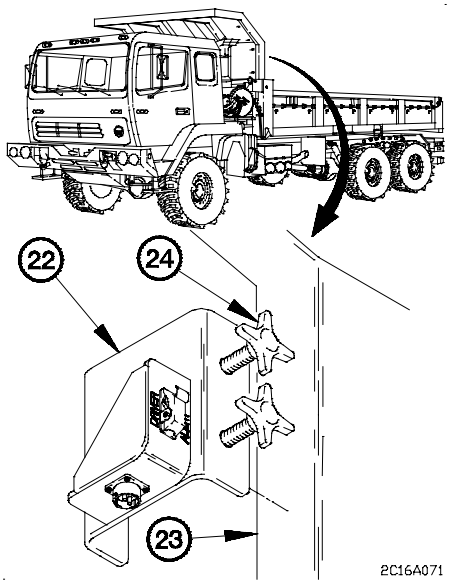

(19) Install alarm bracket (22) on cab protector (23) with two knobs (24).

(20) Notify Unit Maintenance to install troop transport alarm cable assembly.

3-16. M1090/M1094 TROOPSEAT KIT INSTALLATION/REMOVAL (CONT)

b. Removal.

(1) Notify Unit Maintenance to remove troop transport alarm cable assembly.

(2) Loosen two knobs (1) on alarm bracket (2).

(3) Remove alarm bracket (2) from cab protector (3).

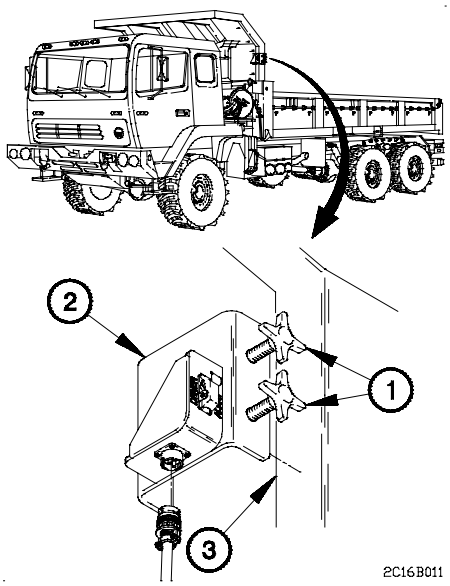

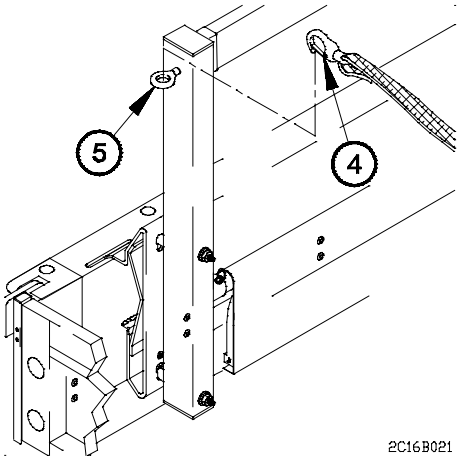

NOTE

- Left and right troopseats are removed the same way. Left side shown.
- Eyebolts are located on all corner seat posts. Left rear eyebolt shown.

(4) Remove safety strap hook (4) from eyebolt (5).

NOTE

Steps (5) through (17) require the aid of an assistant.

(5) Remove quick release pin (6) from rear seats (7).

NOTE

Loosen nuts enough to remove seat posts from stake pocket.

(6) Hold two bolts (8) and loosen nuts (9).

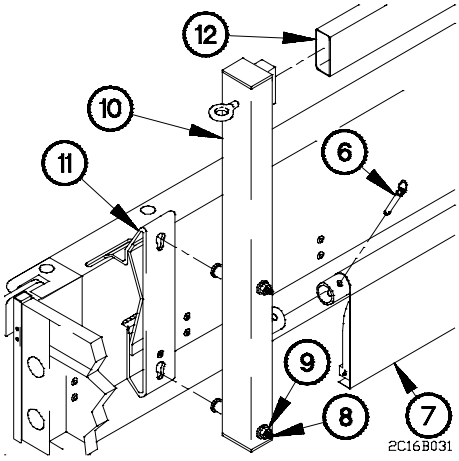

(7) Remove seat post (10) from rear dump body stake (11), backrest (12), and rear seats (7).

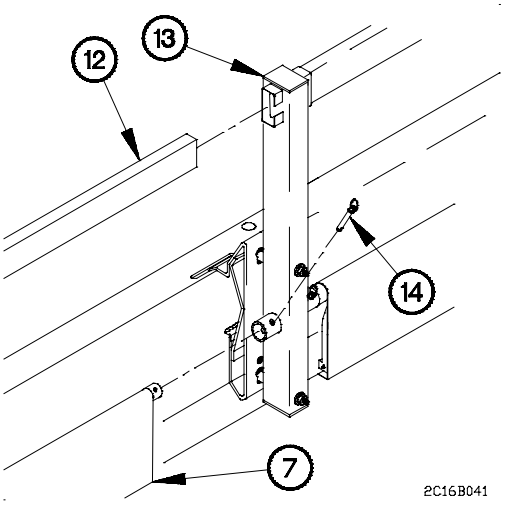

(8) Remove backrest (12) from center seat post (13).

(9) Remove quick release pin (14) from rear seats (7).

(10) Remove rear seats (7) from center seat post (13).

3-16. M1090/M1094 TROOPSEAT KIT INSTALLATION/REMOVAL (CONT)

(11) Hold two bolts (15) and loosen nuts (16).

(12) Remove center seat post (13) from center dump body stake (11).

(13) Remove quick release pin (17) from front seats (18).

(14) Remove center seat post (13) from backrest (19) and front seats (18).

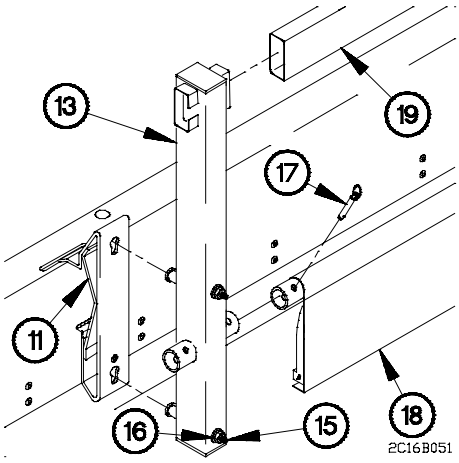

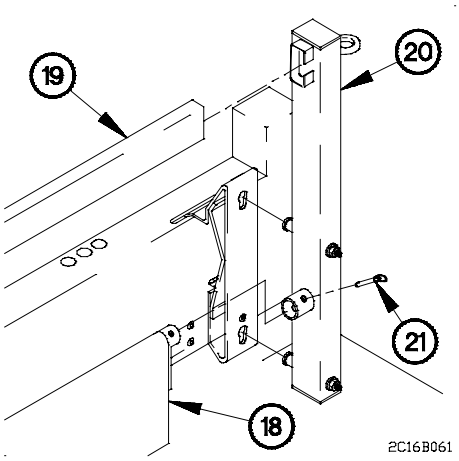

(15) Remove backrest (19) from front seat post (20).

(16) Remove quick release pin (21) from front seats (18).

(17) Remove front seats (18) from front seat post (20).

(18) Hold two bolts (22) and loosen nuts (23).

(19) Remove front seat post (20) from front dump body stake (11).

(20) Remove three dump body stakes (11) from dump body (24).

End of Task.

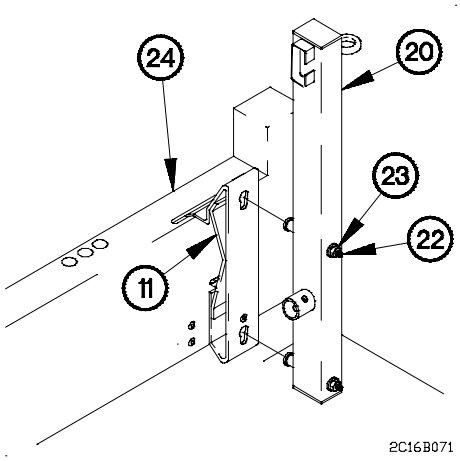

3-17. POWER DISTRIBUTION PANEL (PDP) COVER REMOVAL/INSTALLATION

This task covers:

a. Removal

b. Installation

INITIAL SETUP

Engine shut down (2-27f).

a. Removal.

(1) Pull two spring catches (1) and lift two latch levers (2).

(2) Release two latch hooks (3) from two strike plates (4).

(3) Remove PDP cover (5) from dashboard (6).

b. Installation.

(1) Position PDP cover (5) on dashboard (6).

(2) Fasten two latch hooks (3) on two strike plates (4).

(3) Push down on two latch levers (2) until spring catches (1) are engaged.

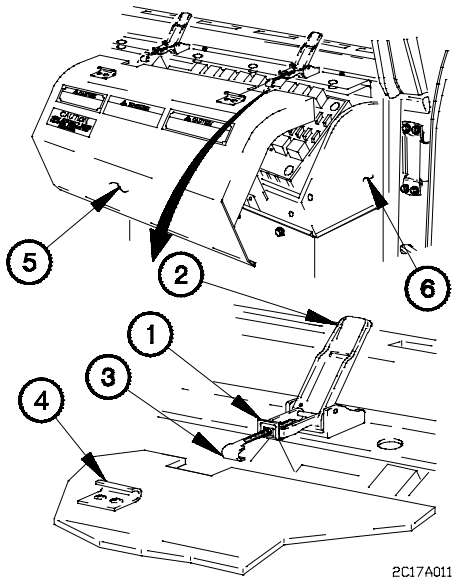

End of Task.

3-18. REAR SPRING BRAKE CAGING

This task covers:

a. Caging
b. Uncaging
c. Follow-On Maintenance

INITIAL SETUP

Equipment Conditions
Engine shut down (para 2-27f).

Tools and Special Tools
Goggles, Industrial (Item 24, Appendix B)

Tools and Special Tools (Cont)
Wrench, Adjustable, 8 in. (Item 50, Appendix B)

Personnel Required
(2)

WARNING

Wear appropriate eye protection when working under vehicle due to the possibility of falling debris. Failure to comply may result in injury to personnel.

a. Caging.

NOTE

To cage brakes, apply caging procedure to both top and bottom spring brake chambers.

(1) Remove nut (1) and washer (2) from caging bolt (3).

(2) Remove caging bolt (3) from caging bolt holder (4).

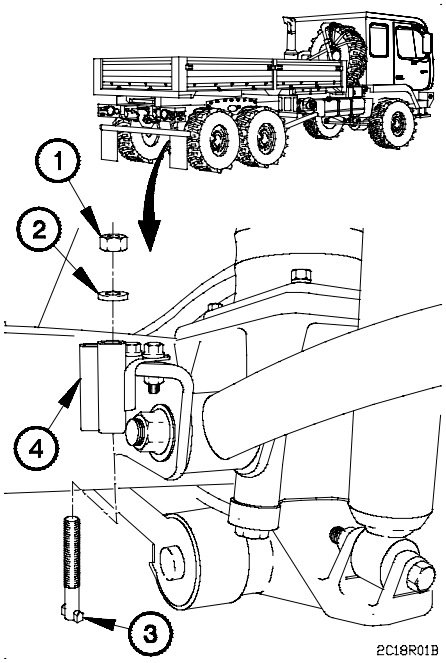

3-18. REAR SPRING BRAKE CAGING (CONT)

NOTE

Save rubber cap for use after uncaging operation to seal spring brake chamber.

(3) Remove rubber cap (5) from spring brake chamber (6).

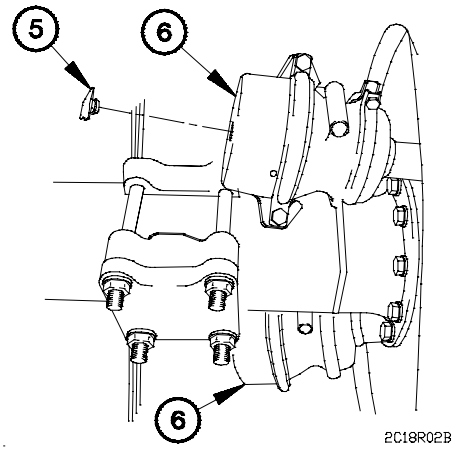

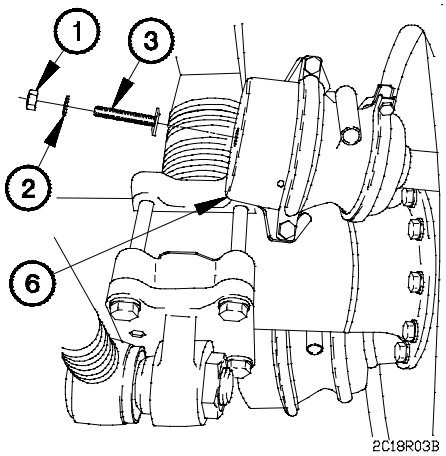

(4) Insert T-end of caging bolt (3) in back of spring brake chamber (6).

(5) Lock caging bolt (3) in place by turning caging bolt to the right 1/4 turn.

(6) Install washer (2) and nut (1) on caging bolt (3).

b. Uncaging.

(1) Remove nut (1) and washer (2) from caging bolt (3).

(2) Remove caging bolt (3) by turning to the left 1/4 turn.

(3) Remove caging bolt (3) from spring brake chamber (4).

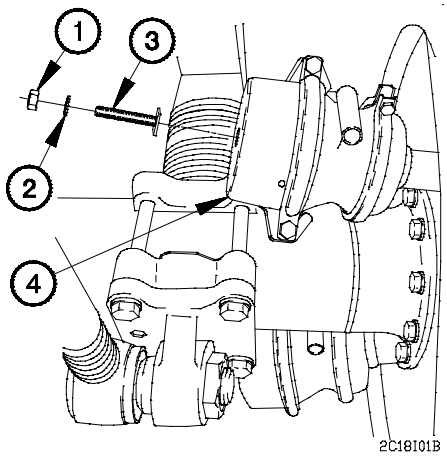

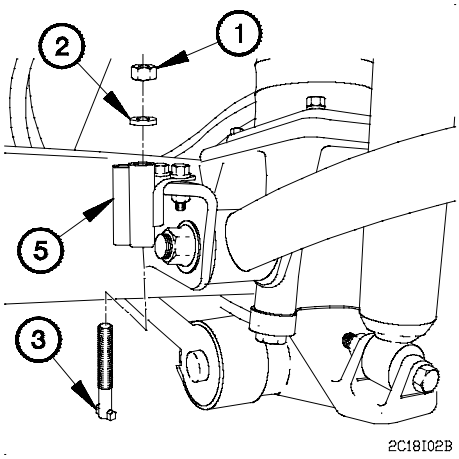

(4) Install caging bolt (3) in caging bolt holder (5).

(5) Position washer (2) and nut (1) on caging bolt (3).

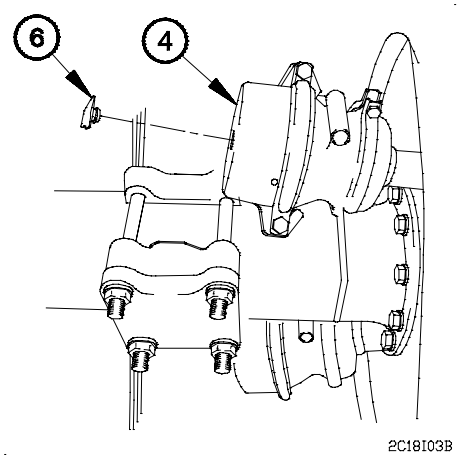

(6) Install rubber cap (6) on spring brake chamber (4).

c. Follow-On Maintenance.

Notify Unit Maintenance to tighten nut on caging bolt to 50 lb-ft (68 N·m).

End of Task.

APPENDIX A
REFERENCES

A-1. SCOPE

This appendix lists all forms, field manuals, technical manuals, and other publications referenced in this manual. Those publications that should be consulted for additional information about vehicle operations are also listed.

A-2. PUBLICATIONS INDEX

The following index should be consulted frequently for latest changes or revisions and for new publications relating to material covered in this technical manual.

Consolidated Index of Army Publications and Blank Forms . . . . . DA Pam 25-30

A-3. FORMS

The following forms pertain to this manual. See DA Pam 25-30 for index of blank forms. See DA Pam 738-750, The Army Maintenance Management System (TAMMS), for instructions on the use of maintenance forms pertaining to this material.

Recommended Changes to DA Publications and Blank Forms . . . . . DA Form 2028-2
Product Quality Deficiency Report . . . . . SF 368

A-4. OTHER PUBLICATIONS

The following publications contain information pertinent to the MTV and associated equipment.

a. Safety.

First Aid for Soldiers . . . . . FM 21-11
Security of Tactical Wheeled Vehicles . . . . . TB 9-2300-422-20

b. MTV.

Hand Receipt Covering Contents of Components of End Item (COEI), Basic Issue Items (BII), and Additional Authorization List (AAL), for M1083 Series, 5-Ton, 6x6, Medium Tactical Vehicles (MTV) . . . . . TM 9-2320-366-10-HR

Warranty Program for M1083 Series, 5-Ton, 6x6, Medium Tactical Vehicle (MTV) . . . . . TB 9-2300-366-15

A-4. OTHER PUBLICATIONS (CONT)

c. General Vehicle Operation.

Vehicle Recovery Operations . . . . . FM 20-22
Manual for the Wheeled Vehicle Driver . . . . . FM 21-305
Army Motor Transport Units and Operations . . . . . FM 55-30
Safety Prevention of Motor Vehicle Accidents . . . . . AR 385-557

d. General Maintenance and Repair.

Rigging . . . . . TM 5-575
Use and Care of Hand Tools and Measuring Tools . . . . . TM 9-243
Materials Used for Cleaning, Preserving, Abrading, and Cementing Ordnance Materiel and Related Materials Including Chemicals . . . . . TM 9-247
Operator's, Unit, Direct Support, and Intermediate General Support Maintenance Manual for Lead-Acid Storage Batteries . . . . . TM 9-6140-200-14
Operator's and Organizational Maintenance Manual for Radio Sets . . . . . TM 11-5820-498-12
Operator's Manual, Radio Set, AN/VRC-46 . . . . . TM 11-5820-401-10-1
Operator's Manual, Radio Set, AN/VRC-90A . . . . . TM 11-5820-890-10-1
Cooling Systems: Tactical Vehicles . . . . . TM 750-254
Army Oil Analysis Program . . . . . TB 43-0211

e. Cold Weather Operation.

Operation and Maintenance of Ordnance Materiel in Cold Weather (0 to -65 ^{o}F) . . . . . FM 9-207
Basic Cold Weather Manual . . . . . FM 31-70
Northern Operations . . . . . FM 31-71

f. Operation on Unusual Terrain.

Desert Operations (How to Fight) . . . . . FM 90-3 (HTF)
Jungle Operations (How to Fight) . . . . . FM 90-5 (HTF)
Mountain Operations . . . . . FM 90-6

g. Decontamination.

Decontamination Operations Facilities & Equipment . . . . . TB 700-4
NBC Protection . . . . . FM 3-4
NBC Decontamination . . . . . FM 3-5

h. Maintenance of Special Purpose Kits.

Operator and Organizational Maintenance Manual for Chemical Alarm . . . . . TM 3-6665-225-12
Operator's and Unit Maintenance Manual Including Repair Parts and Special Tools List for Decontaminating Apparatus: M13 . . . . . TM 3-4230-214-12&P
Operator, Organizational, Direct Support, and General Support Maintenance Manual Including Repair Parts and Special Tools List for Various Machine Gun Mounts . . . . . TM 9-1005-245-14

j. General.

Principles of Automotive Vehicles . . . . . TM 9-8000
Procedures for Destruction of Tank-Automotive Equipment to Prevent Enemy Use (US Army Tank-Automotive Command) . . . . . TM 750-244-6
Soldier's Manual MOS 88M Motor Transport Operator, Skill Levels 1/2 . . . . . STP 55-88-M12-SM
Operator's Manual (M998 Series) . . . . . TM 9-2320-280-10
Operator's Manual (M1008 Series) . . . . . TM 9-2320-289-10
Operator's Manual (M35 Series) . . . . . TM 9-2320-361-10
Operator's Manual (M939 Series) . . . . . TM 9-2320-272-10
Route Reconnaissance and Classification . . . . . FM 5-36

k. Land, Sea, and Air Shipment.

Airdrop of Supplies and Equipment: Rigging 5-Ton Trucks . . . . . FM 10-526
Marine Terminal Lifting Guidance . . . . . MTMCTEA Pam 56-1
Multi-service Helicopter External Air Transport: Basic Operations and Equipment . . . . . FM 55-450-3
Multi-service Helicopter External Air Transport: Dual-Point Load Rigging Procedures . . . . . FM 55-450-5
Multi-service Helicopter External Air Transport: Single-Point Load Rigging Procedures . . . . . FM 55-450-4
Standard Characteristics (Dimensions, Weight, and Cube) for Transportability of Military Vehicles and Other Outsize/Overweight Equipment (in TOE Line Sequence) . . . . . TB 55-46-1
Tiedown Handbook for Rail Movements . . . . . MTMCTEA Pam 55-19
Tiedown Handbook for Truck Movements . . . . . MTMCTEA Ref 92-55-20

APPENDIX B
COMPONENTS OF END ITEM (COEI)
AND
BASIC ISSUE ITEMS (BII) LISTS

Section I. INTRODUCTION

B-1. SCOPE

This appendix lists components of the end item and basic issue items for the MTV to help you inventory the items for safe and efficient operation of the equipment.

B-2. GENERAL

The Components of End Item (COEI) and Basic Issue Items (BII) lists are divided into the following sections:

a. Section II, Components of End Item. This listing is for information purposes only, and is not authority to requisition replacements. These items are part of the MTV, but they are not to be removed and separately packaged for transportation or shipment. As part of the end item, these items must be with the end item whenever it is issued or transferred between property accounts. Illustrations are furnished to help you find and identify the items.

b. Section III, Basic Issue Items. These essential items are required to place the MTV in operation, operate it, and to do emergency repairs. Although shipped separately packaged, BII must be with the MTV during operation and when it is transferred between property accounts. Listing these items is your authority to request/requisition them for replacement based on authorization of the end item by the TOE/MTOE. Illustrations are furnished to help you find and identify the items.

B-3. EXPLANATION OF COLUMNS

The following provides an explanation of columns found in the tabular listings:

a. Column (1), Illus Number. Gives you the number of the item illustrated.

b. Column (2), National Stock Number. Identifies the stock number of the item to be used for requisitioning purposes.

c. Column (3), Description and Usable On Code. Identifies the Federal item name (in capital letters) followed by a minimum description when needed. The last line below the description is the Commercial and Government Entity Code (CAGEC) (in parentheses) and the part number.

B-3. EXPLANATION OF COLUMNS (CONT)

If the item you need is not the same for different models of the equipment, a Usable On Code will appear on the right side of the description column on the same line as the part number. These codes are identified below:

CODE	USED ON
MAB	M1083
MWB	M1083 w/15K Self-Recovery Winch
MAE	M1084
MAL	M1085
MWL	M1085 w/15K Self-Recovery Winch
MAM	M1086
MAF	M1088
MWF	M1088 w/15K Self-Recovery Winch
MAG	M1089
MAH	M1090
MWH	M1090 w/15K Self-Recovery Winch
MAA	M1092
MAC	M1093
MWC	M1093 w/15K Self-Recovery Winch
MAJ	M1094
MWJ	M1094 w/15K Self-Recovery Winch
MAK	M1096

d. Column (4), U/I (Unit of Issue). Indicates how the item is issued for the National Stock Number shown in column two.

e. Column (5), Qty Reqd. Indicates the quantity required.

Section II. COMPONENTS OF END ITEM

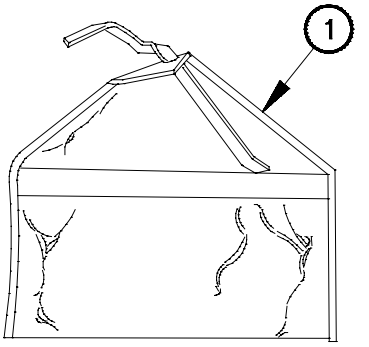

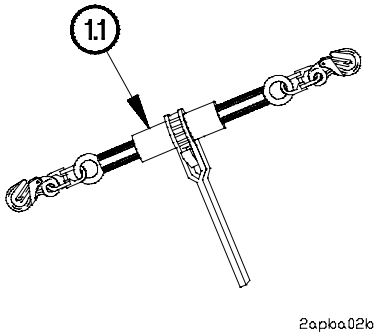

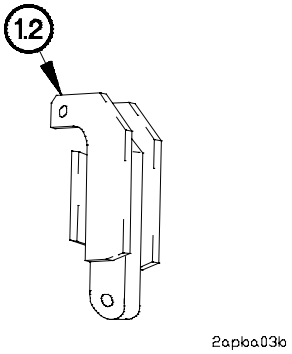

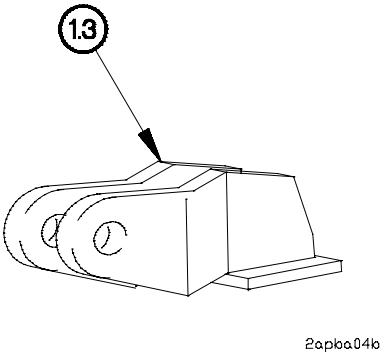

(1) Illus Number	(2) National Stock Number	(3) Description CAGEC and Part Number	Usable On Code	(4) U/I	(5) Qty Reqd
1	8105-01-387-2009	BAG, TOOL, TORCH (19207) 12412587	MAG	EA	1
1.1	3990-01-479-0538	BINDER, LOAD (19207) 12421708	MAG	EA	2
1.2	5340-01-475-2194	BRACKET, MOUNTING (19207) 12421701	MAG	EA	2
1.3	5340-01-475-2286	BRACKET, MOUNTING (19207) 12421704-001	MAG	EA	1

Section II. COMPONENTS OF END ITEM (CONT)

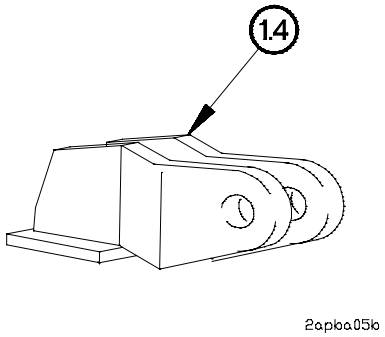

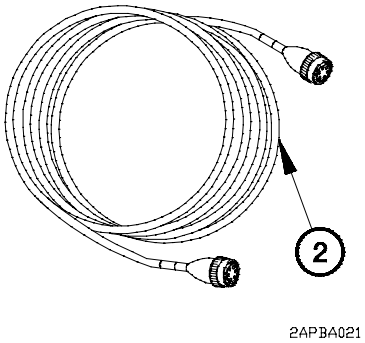

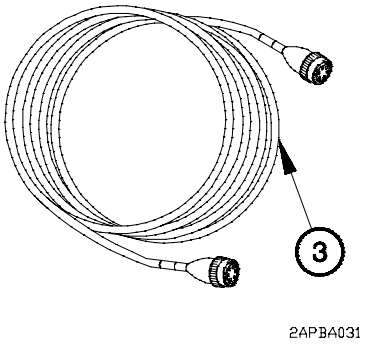

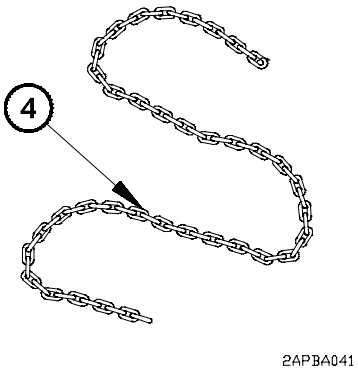

(1) Illus Number	(2) National Stock Number	(3) Description CAGEC and Part Number	Usable On Code	(4) U/I	(5) Qty Reqd
1.4	5340-01-475-2300	BRACKET, MOUNTING (19207) 12421704-002	MAG	EA	1
2	6150-01-387-6357	CABLE ASSEMBLY, ELECTRICAL (12361) 2-195-6-00653	MAE, MAM	EA	1
3	6150-01-371-3924	CABLE ASSEMBLY, ELECTRICAL (12361) 2-195-6-00652	MAG	EA	1
4	4010-01-388-9420	CHAIN, WELD (19207) 12415955	MAH,MAJ, MWH, MWJ	EA	2

Section II. COMPONENTS OF END ITEM (CONT)

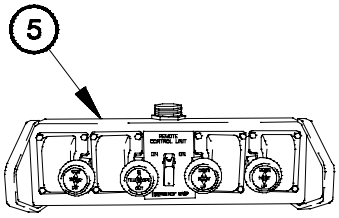

2apba061

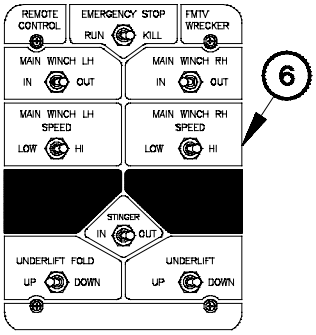

2apba071

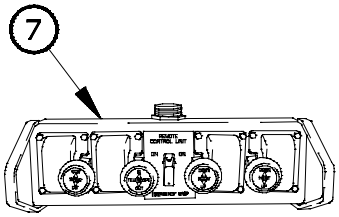

2apba081

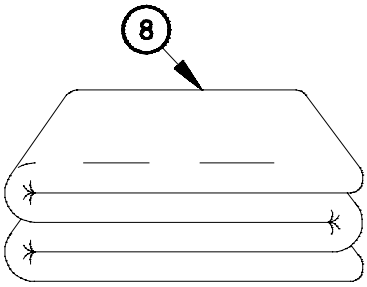

2apba091

(1) Illus Number	(2) National Stock Number	(3) Description CAGEC and Part Number	Usable On Code	(4) U/I	(5) Qty Reqd
5	6110-01-371-3907	CONTROL, REMOTE SWITCHING (12361) 2-195-6-00668	MAE,MAM	EA	1
6	6110-01-373-2800	CONTROL, REMOTE SWITCHING (19207) 12412306	MAG	EA	1
7	6110-01-428-6142	CONTROL, REMOTE SWITCHING (12361) 2-195-6-00667	MAG	EA	1
8	2590-01-391-9944	COVER, VEHICULAR (0FW39) 12415785	MAH, MAJ, MWH,MWJ	EA	1

Section II. COMPONENTS OF END ITEM (CONT)

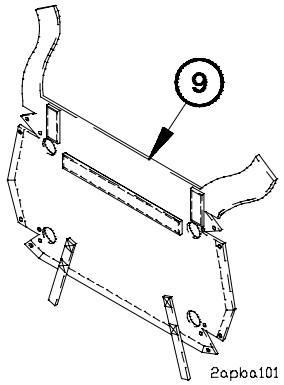

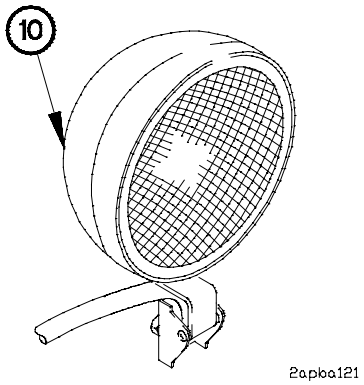

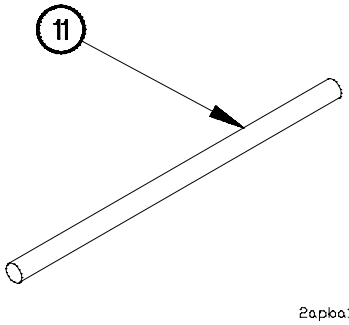

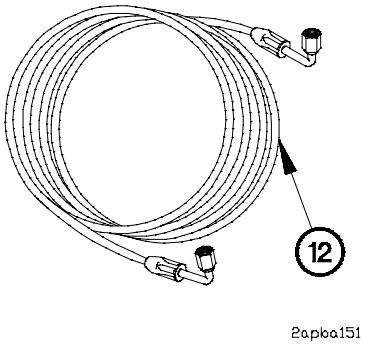

(1) Illus Number	(2) National Stock Number	(3) Description CAGEC and Part Number	Usable On Code	(4) U/I	(5) Qty Reqd
9	2540-01-453-6945	COVER, RADIATOR, COLD WEATHER (0FW39) 12421395		EA	1
10	6220-01-390-7341	FLOODLIGHT, ELECTRICAL (0FW39) 12378828	MAE,MAF, MAG,MAM, MWF	EA	2
11	4320-01-351-8600	HANDLE, HYDRAULIC PUMP (95745) CP13-23	MAE, MAG,MAM	EA	1
12	4720-01-435-1664	HOSE ASSEMBLY (01276) 1C04488KKK2400A	MAG	EA	1

Section II. COMPONENTS OF END ITEM (CONT)

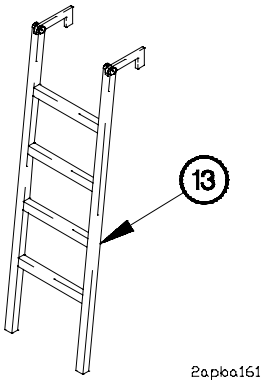

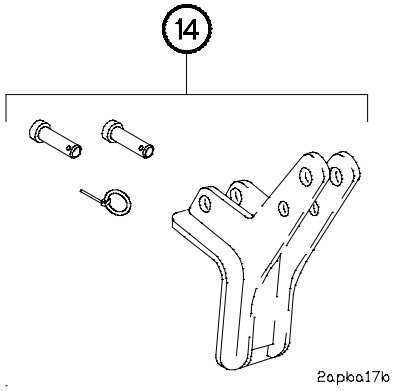

(1) Illus Number	(2) National Stock Number	(3) Description CAGEC and Part Number	Usable On Code	(4) U/I	(5) Qty Reqd
13	2540-01-394-9681	LADDER, BOARDING (19207) 12418950	MAB,MAC, MAE,MAL, MAM,MWB, MWC,MWL	EA	1
14	5340-01-372-0948	LIFT TOOL, RH (65459) 9-807-010052	MAG	EA	1
	5315-01-434-7266	PIN, LYNCH (65459) 9-557-010457-01		EA	2
	5315-01-371-9471	PIN, LIFT (65459) 9-557-010443		EA	1
	5315-01-371-9470	PIN, LIFT (65459) 9-557-010442		EA	1

Section II. COMPONENTS OF END ITEM (CONT)

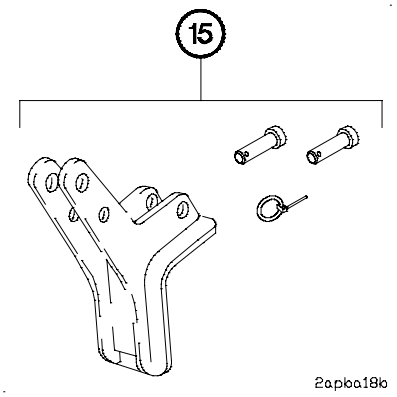

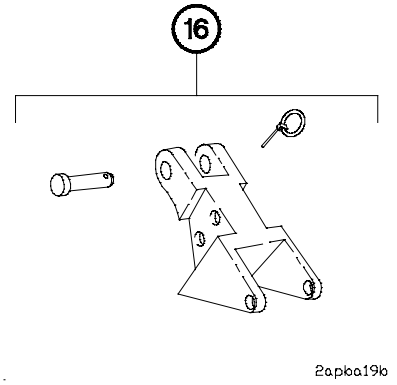

(1) Illus Number	(2) National Stock Number	(3) Description CAGEC and Part Number	Usable On Code	(4) U/I	(5) Qty Reqd
15	4910-01-434-6818	LIFT TOOL, LH (65459) 9-807-010050	MAG	EA	1
	5315-01-434-7266	PIN, LYNCH (65459) 9-557-010457-01		EA	2
	5315-01-371-9471	PIN, LIFT (65459) 9-557-010443		EA	1
	5315-01-371-9470	PIN, LIFT (65459) 9-557-010442		EA	1
16	4910-01-434-6814	LIFT TOOL, TOP BUMPER (65459) 9-807-010048	MAG	EA	2
		PIN, LIFT (65459) 9-557-010443		EA	1
		PIN, LIFT (65459) 9-557-010457-01		EA	1

Section II. COMPONENTS OF END ITEM (CONT)

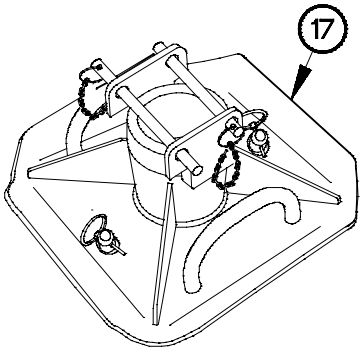

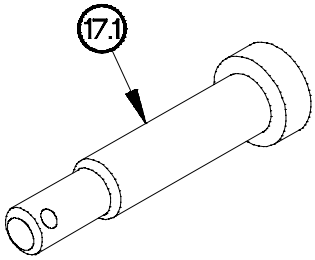

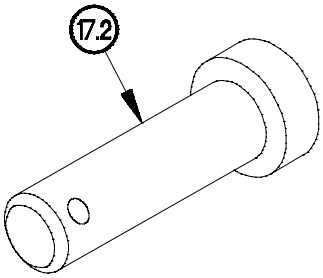

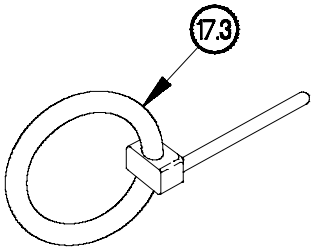

(1) Illus Number	(2) National Stock Number	(3) Description CAGEC and Part Number	Usable On Code	(4) U/I	(5) Qty Reqd
17	2590-01-428-6158	PAD, OUTRIGGER (12361) 2-195-1-00632	MAE, MAM, MAG	EA	2
17.1	5315-01-475-9921	PIN, SHOULDERED, HEADED (19207) 12421702	MAG	EA	2
17.2	5315-01-476-0116	PIN, STRAIGHT, HEADED (19207) 12421703	MAG	EA	2
17.3	5315-01-475-9965	PIN, STRAIGHT, HEADED (96652) 63-01	MAG	EA	4

Section II. COMPONENTS OF END ITEM (CONT)

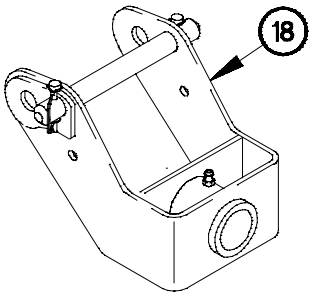

2apka22b

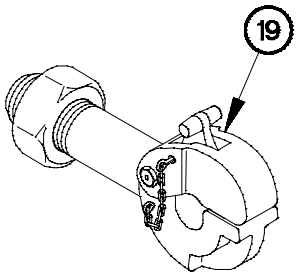

2apka23b

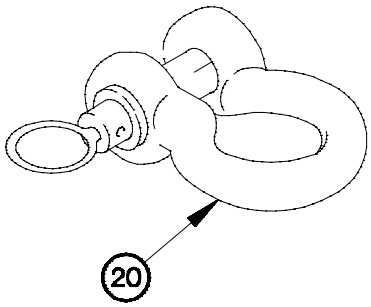

2apka26b

(1) Illus Number	(2) National Stock Number	(3) Description CAGEC and Part Number	Usable On Code	(4) U/I	(5) Qty Reqd
18	2540-01-372-5098	PINTLE ASSEMBLY, TOWING (65459) 9-040-010057	MAG	EA	1
19	2540-00-047-3926	PINTLE ASSEMBLY, TOWING (96906) MS51117-1	MAG	EA	1
20	4030-01-391-9599	SHACKLE (75535) 5550379	MAG	EA	4

Section II. COMPONENTS OF END ITEM (CONT)

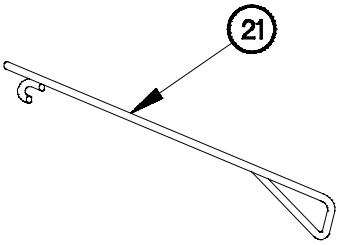

2apba27b

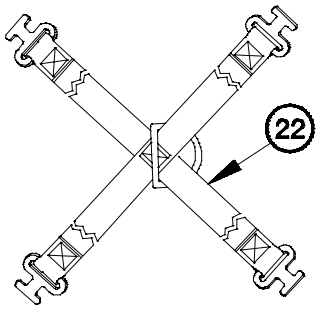

2apba28b

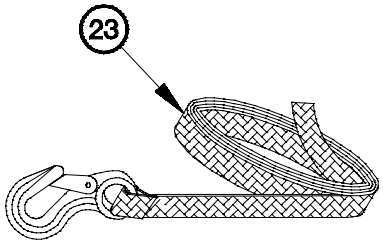

2apba29b

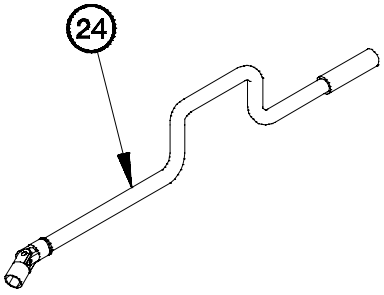

2apba34b

(1) Illus Number	(2) National Stock Number	(3) Description CAGEC and Part Number	Usable On Code	(4) U/I	(5) Qty Reqd
21	5340-01-328-4444	RELEASE TOOL (74410) XA-0756	MAF, MWF	EA	1
22	3940-01-469-9939	SLING SET, MULTIPLE LEG (98313) FDC-8514-2	MAC,MAJ, MWC,MWJ	EA	1
23	5340-01-433-4157	STRAP, WEBBING (0FW39) 12421187	MAC,MAJ, MWC,MWJ	EA	1
24		WRENCH ASSEMBLY SPEED HANDLE, W/UNIVERSAL SOCKET (0FW39) TV950065	MAC, MAJ, MWC, MWJ	EA	1

Section III. BASIC ISSUE ITEMS

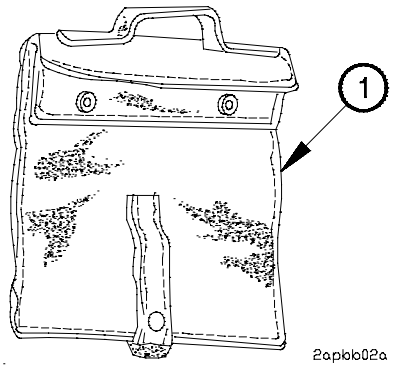

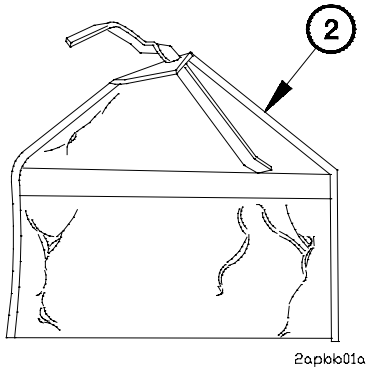

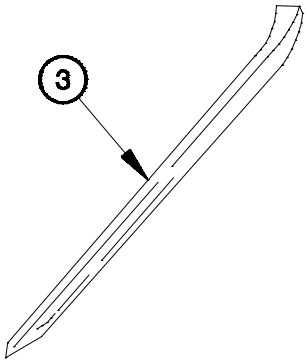

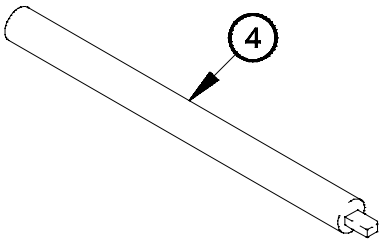

(1) Illus Number	(2) National Stock Number	(3) Description CAGEC and Part Number	Usable On Code	(4) U/I	(5) Qty Reqd
1	2540-00-670-2459	BAG ASSEMBLY, PAMPHLET (19207) 11676920		EA	1
2	5140-00-772-4142	BAG, TOOL (19207) 7724142		EA	1
3	5120-00-224-1372	BAR, PINCH (20728) G20-1372	MAG	EA	1
4	5120-00-243-2419	BAR, SOCKET WRENCH HANDLE (19207) 6196147		EA	1

Section III. BASIC ISSUE ITEMS (CONT)

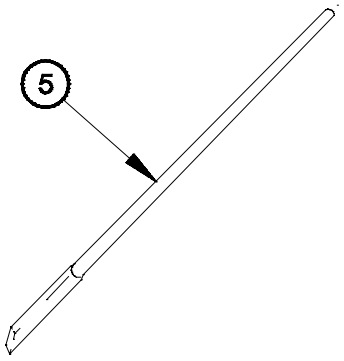

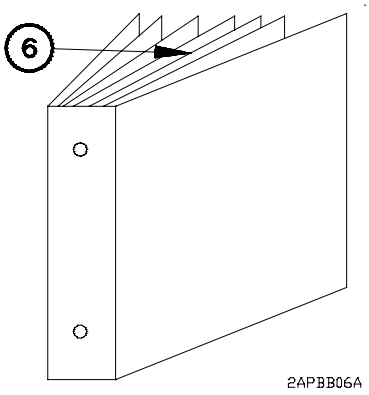

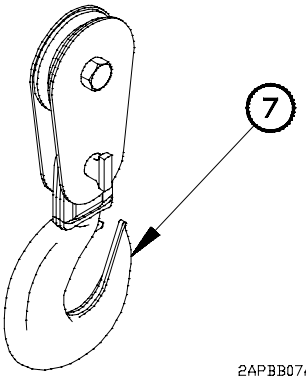

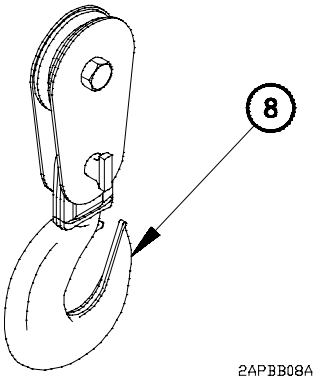

(1) Illus Number	(2) National Stock Number	(3) Description CAGEC and Part Number	Usable On Code	(4) U/I	(5) Qty Reqd
5	5120-00-293-0665	BAR, WRECKING (57068) 55-130	MAG	EA	1
6	7510-00-889-3494	BINDER, LOOSE-LEAF (19207) 11677003		EA	1
7	3940-01-391-1848	BLOCK, TACKLE (19207) 12378672-002	MAG	EA	2
8	3940-01-447-4095	BLOCK, TACKLE (75535) M8011971	MAG,MWB, MWC,MWF, MWH,MWJ, MWL	EA	1

Section III. BASIC ISSUE ITEMS (CONT)

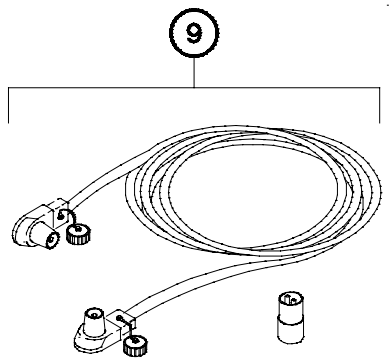

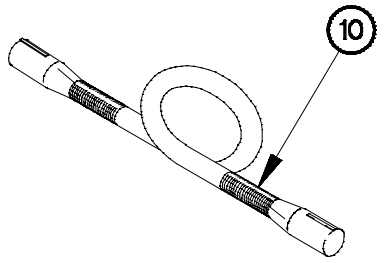

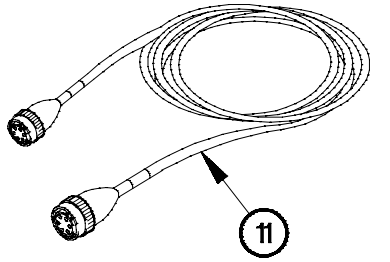

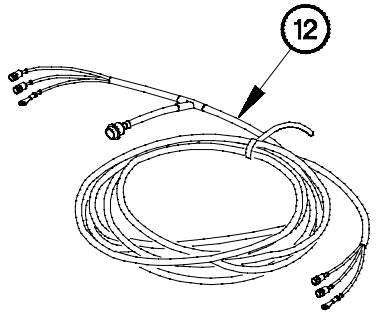

(1) Illus Number	(2) National Stock Number	(3) Description CAGEC and Part Number	Usable On Code	(4) U/I	(5) Qty Reqd
9	2590-00-148-7961	CABLE KIT, SPECIAL PURPOSE (56161) 10502786	MAG	EA	1
	5935-00-322-8959	ADAPTER (19207) 11677570	MAG	EA	2
10	6150-01-390-7346	CABLE ASSEMBLY (0XY75) YES-8035	MAG	EA	1
11	6150-00-772-8814	CABLE ASSEMBLY (19207) 7728814	MAF,MWF	EA	1
12	6150-01-390-7345	CABLE KIT (19207) 12420757	MAG	EA	1

Section III. BASIC ISSUE ITEMS (CONT)

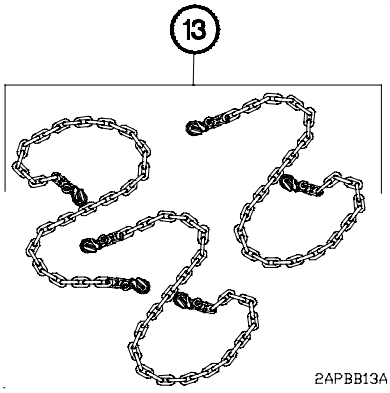

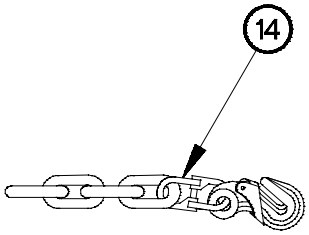

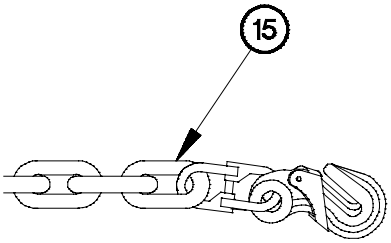

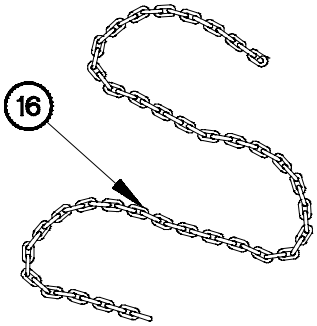

(1) Illus Number	(2) National Stock Number	(3) Description CAGEC and Part Number	Usable On Code	(4) U/I	(5) Qty Reqd
13	4010-00-443-4845	CHAIN ASSEMBLY, SINGLE LEG (19207) 10944642-2	MAG	EA	3
14	4010-01-434-7397	CHAIN W/HOOK, 8FT. (13743) S950420	MAG	EA	1
15	4010-01-455-5630	CHAIN, HEAVY RECOVERY (19207) 12421485	MAG	EA	2
16		CHAIN, WELDED (0FW39) 12418052		EA	1

Section III. BASIC ISSUE ITEMS (CONT)

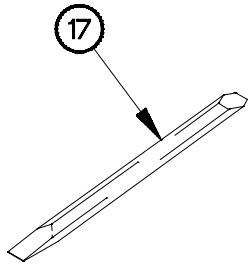

2APBB171

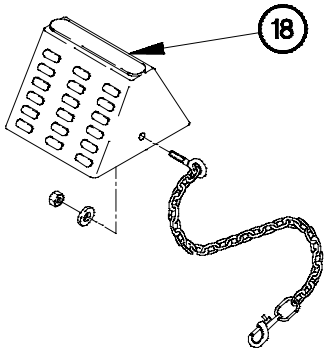

2APBB18B

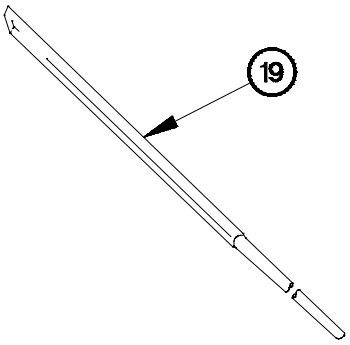

2APBB19B

(1) Illus Number	(2) National Stock Number	(3) Description CAGEC and Part Number	Usable On Code	(4) U/I	(5) Qty Reqd
17	5110-00-221-1075	CHISEL, BLACKSMITH (80204) B209.1	MAG	EA	1
18	2540-00-678-3469	CHOCK, WHEEL (58536) A-A-52475-1		EA	2
	5306-00-108-0943	BOLT (96906) MS35751-65		EA	1
	5310-00-087-7493	WASHER (96906) MS27183-13		EA	1
	5310-00-880-7744	NUT (96906) MS51967-5		EA	1
	5340-01-243-9656	SNAP HOOK (81349) M43770/6-MIXEE1		EA	1
19	5120-00-224-1390	CROWBAR (18876) 9150189	MAG	EA	1

Section III. BASIC ISSUE ITEMS (CONT)

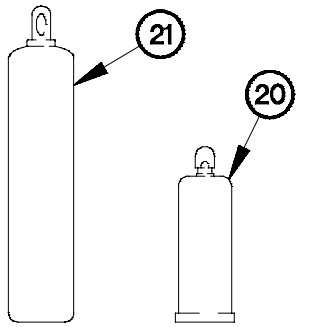

2apbb21b

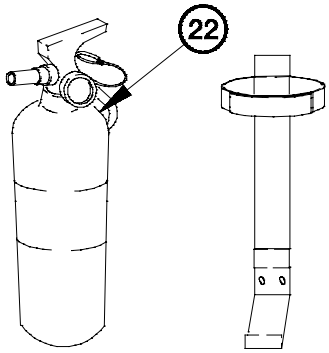

2APBB22B

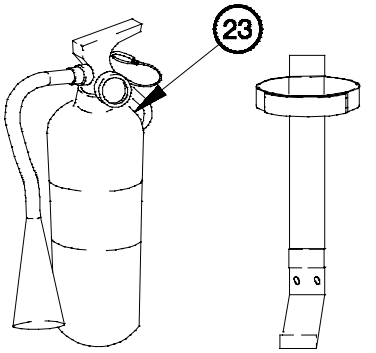

2APBB23B

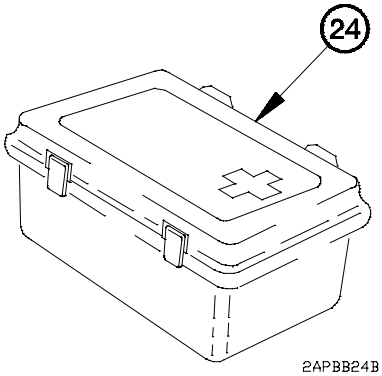

2APBB24B

(1) Illus Number	(2) National Stock Number	(3) Description CAGEC and Part Number	Usable On Code	(4) U/I	(5) Qty Reqd
20	8120-00-268-3360	CYLINDER, COMPRESSED (81349) MIL-C-3701	MAG	EA	1
21	8120-00-357-7992	CYLINDER, COMPRESSED (81348) C901/1-15	MAG	EA	1
22	4210-01-149-1356	EXTINGUISHER, FIRE (19207) 12255633-1		EA	1
23	4210-00-775-0127	EXTINGUISHER, FIRE (34623) MA93-20000	MAG	EA	2
24	6545-00-922-1200	FIRST AID KIT (64616) SCC-6545-IL VOL2	MAG	EA	1

Section III. BASIC ISSUE ITEMS (CONT)

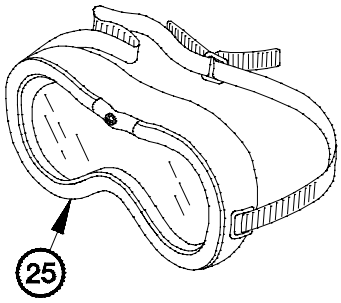

2APBB25B

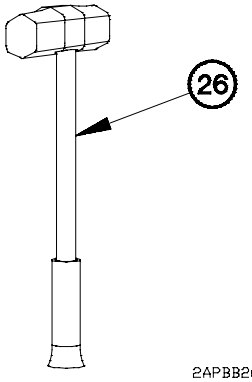

2APBB26B

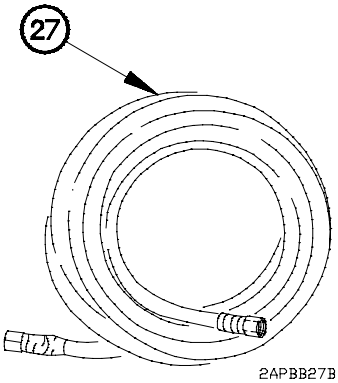

2APBB27B

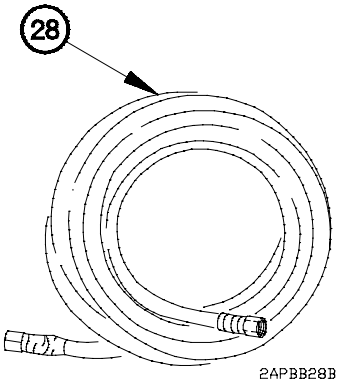

2APBB28B

(1) Illus Number	(2) National Stock Number	(3) Description CAGEC and Part Number	Usable On Code	(4) U/I	(5) Qty Reqd
25	4240-00-052-3776	GOGGLES, INDUSTRIAL (80204) ANSI Z87.1	MAE, MAG, MAM	EA	1
26	5120-00-900-6098	HAMMER, HAND (58536) A-A-1293	MAG	EA	1
27	4720-00-356-8571	HOSE ASSEMBLY, NONMETALLIC (13669) 21-1108	MAG	EA	1
28	4720-00-356-8572	HOSE ASSEMBLY, NONMETALLIC (81348) ZZ-H-461	MAG	EA	1

Section III. BASIC ISSUE ITEMS (CONT)

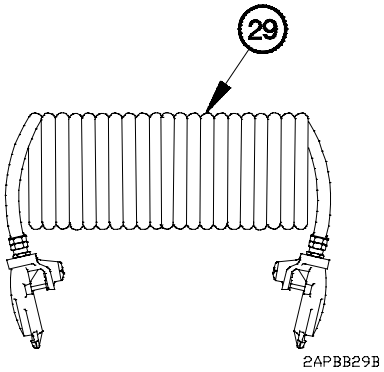

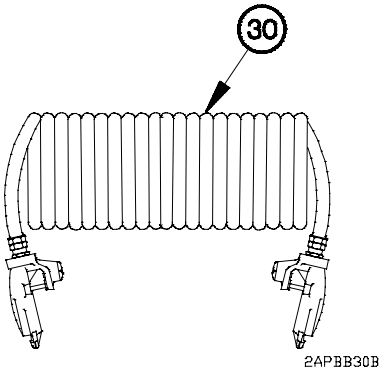

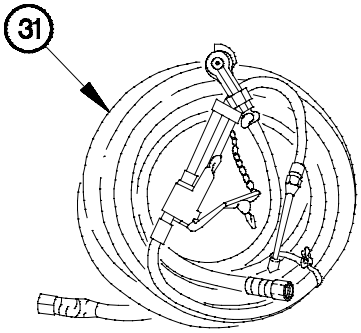

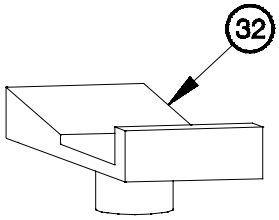

(1) Illus Number	(2) National Stock Number	(3) Description CAGEC and Part Number	Usable On Code	(4) U/I	(5) Qty Reqd
29	4720-01-391-8290	HOSE ASSEMBLY, NONMETALLIC (0FW39) 12419936-001	MAG	EA	1
30	4720-01-391-8291	HOSE ASSEMBLY, NONMETALLIC (0FW39) 12419936-002	MAG	EA	1
31	4910-01-038-2820	INFLATOR-GAGE, TIRE W/HOSE (19207) 11677140-5		EA	1
32		JACK, ADAPTER (0FW39) (12422562)		EA	1

Section III. BASIC ISSUE ITEMS (CONT)

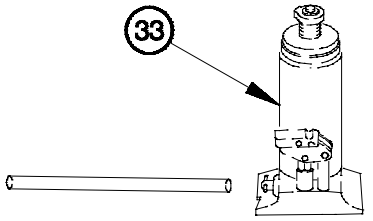

2APBB33B

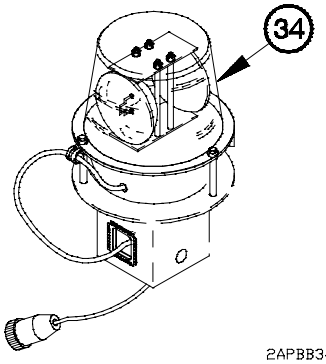

2APBB34B

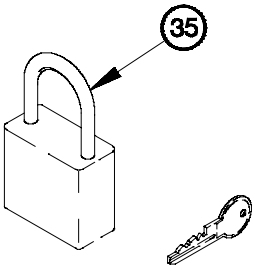

2APBB35B

(1) Illus Number	(2) National Stock Number	(3) Description CAGEC and Part Number	Usable On Code	(4) U/I	(5) Qty Reqd
33	5120-01-374-0532	JACK, HYDRAULIC, HAND OPERATED (0E3L5) D-51013		EA	1
34	6220-01-433-5828	LIGHT, AMBER WARNING, WRECKER (0FW39) 12421444	MAG	EA	2
35	5340-01-468-5390	PADLOCK SET (22107) 5200GLKAZ	MAA,MAB, MAC,MAF, MAH,MAJ, MAK,MAL,MWB, MWC,MWF,MWH,MWJ	EA	1
	5340-01-408-8452	PADLOCK SET (22107) 5200GLKA10	MAG	EA	1
	5340-01-437-0625	PADLOCK SET (22107) 5200GLKA6	MAE,MAM	EA	1

Section III. BASIC ISSUE ITEMS (CONT)

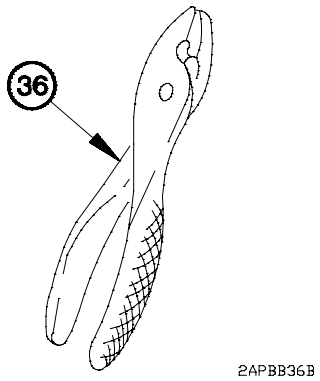

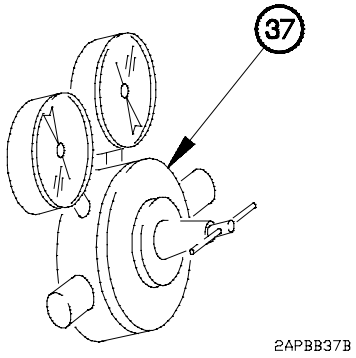

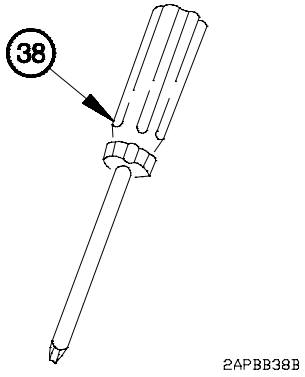

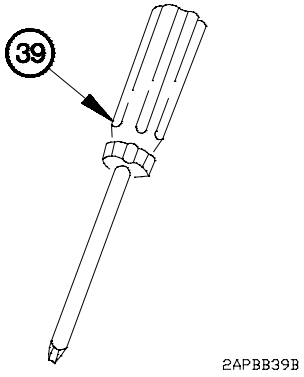

(1) Illus Number	(2) National Stock Number	(3) Description CAGEC and Part Number	Usable On Code	(4) U/I	(5) Qty Reqd
36	5120-00-223-7397	PLIERS, SLIP JOINT, 8 IN. (56161) 10510983		EA	1
37	4820-00-551-1094	VALVE, REGULATING, FLUID PRESSURE (58536) AA5540-1	MAG	EA	1
38	5120-00-234-8912	SCREWDRIVER, CROSSTIP (19207) 11655777-9		EA	1
39	5120-00-234-8913	SCREWDRIVER, CROSSTIP (19207) 11655777-12		EA	1

Section III. BASIC ISSUE ITEMS (CONT)

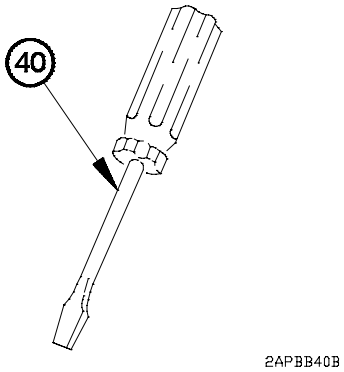

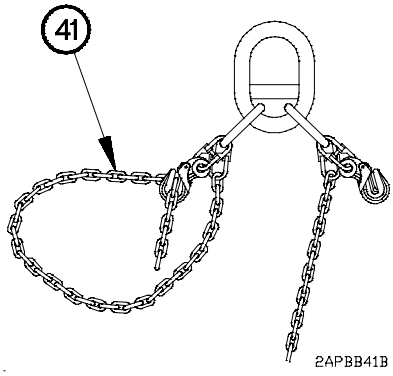

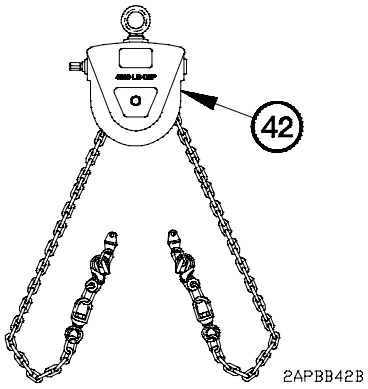

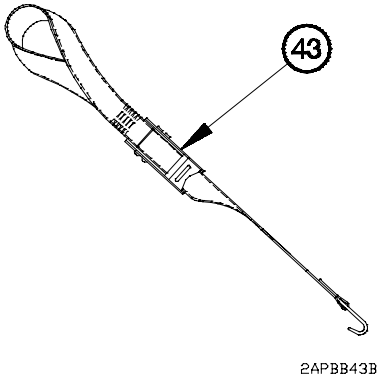

(1) Illus Number	(2) National Stock Number	(3) Description CAGEC and Part Number	Usable On Code	(4) U/I	(5) Qty Reqd
40	5120-00-237-6985	SCREWDRIVER, FLATTIP (56161) 10510988		EA	1
41	3940-01-209-6008	SLING AND WIRE ROPE ASSEMBLY (45152) 1385750	MAG	EA	1
42	4910-01-243-5556	SLING, ENGINE & TRANSMISSION (59678) DFP-188	MAG	EA	1
43		STRAP, RETAINING (31272) 8-1-00	MAG	EA	1

Section III. BASIC ISSUE ITEMS (CONT)

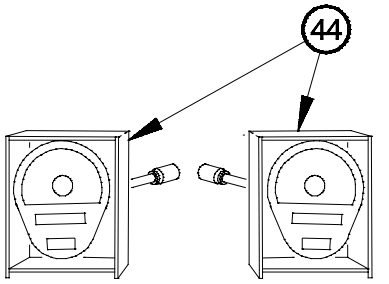

2APBB44B

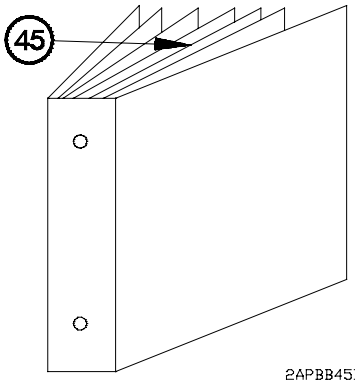

2APBB45B

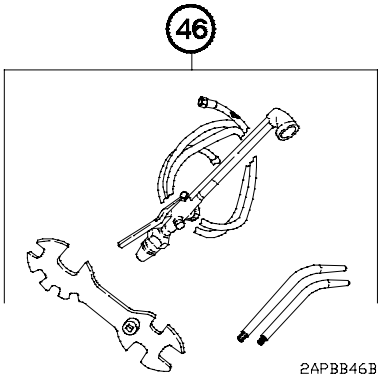

2APBB46B

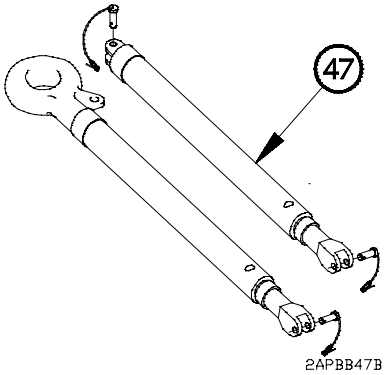

2APBB47B

(1) Illus Number	(2) National Stock Number	(3) Description CAGEC and Part Number	Usable On Code	(4) U/I	(5) Qty Reqd
44	6220-01-420-5986	TAILLIGHT ASSEMBLY (19207) 12420353	MAG	EA	2
45		TECHNICAL MANUAL, OPERATOR'S INSTRUCTIONS, M1083 SERIES, 5-TON		EA	1
46	3433-00-294-6743	TORCH SET, CUTTING AND WELDING (81349) MIL-T-13880	MAG	EA	1
47	4910-01-365-9304	TOWBAR, MOTOR VEHICLE (59678) 7551383	MAG	EA	1

Section III. BASIC ISSUE ITEMS (CONT)

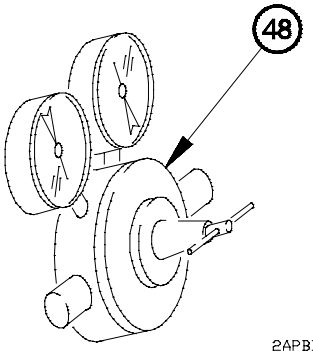

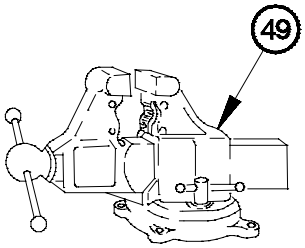

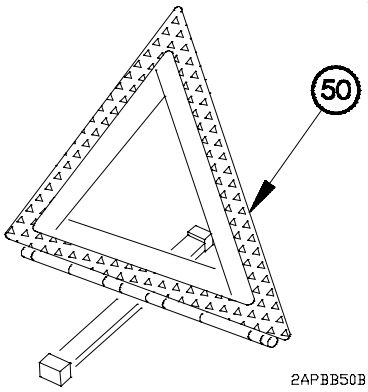

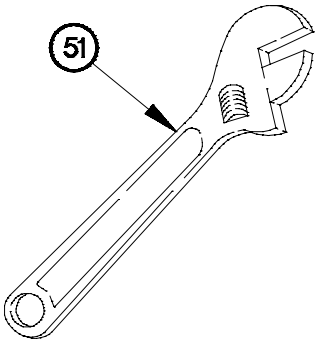

(1) Illus Number	(2) National Stock Number	(3) Description CAGEC and Part Number	Usable On Code	(4) U/I	(5) Qty Reqd
48	4820-00-641-3519	VALVE, REGULATING (58536) A-A-55540	MAG	EA	1
49	5120-00-243-9072	VISE, BENCH AND PIPE (81348) GGG-V-410	MAG	EA	1
50	9905-00-148-9546	WARNING DEVICE KIT (19207) 11669000		SE	1
51	5120-00-264-3796	WRENCH, ADJUSTABLE, 12 IN. (19207) 11655778-5		EA	1

Section III. BASIC ISSUE ITEMS (CONT)

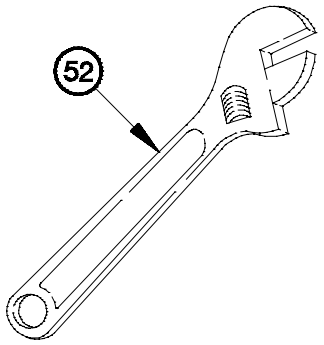

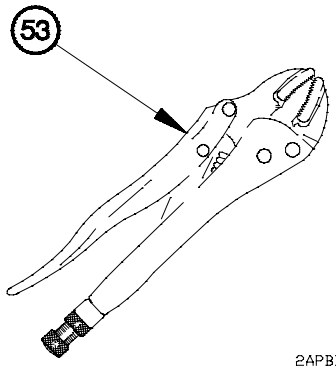

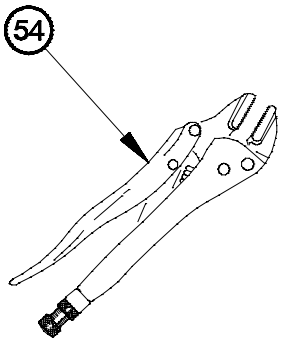

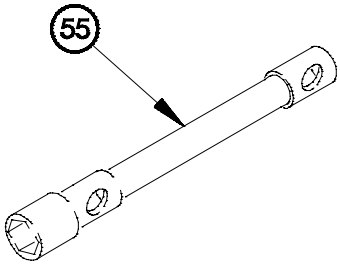

(1) Illus Number	(2) National Stock Number	(3) Description CAGEC and Part Number	Usable On Code	(4) U/I	(5) Qty Reqd
52	5120-00-240-5328	WRENCH, ADJUSTABLE, 8 IN. (19207) 11655778-3		EA	1
53	5120-00-277-4244	WRENCH, PLIER (77243) 10R	MAG	EA	1
54	5120-00-494-1911	WRENCH, PLIER (80244) GGG-W-00649 TY1CL2STB	MAG	EA	1
55	5120-00-316-9217	WRENCH, SOCKET (19207) 11677000-3		EA	1

APPENDIX C
ADDITIONAL AUTHORIZATION LIST (AAL)

Section I. INTRODUCTION

C-1. SCOPE

This appendix lists additional items you are authorized for support of the vehicle.

C-2. GENERAL

This list identifies items that do not have to accompany the vehicle and that do not have to be turned in with it. These items are all authorized to you by Common Tables of Allowance (CTA), Modification Table of Organization and Equipment (MTOE), Tables of Distribution and Allowances (TDA), or Joint Table of Allowance (JTA).

C-3. EXPLANATION OF LISTING

National Stock Numbers, description, and quantities are provided to help you identify and request the additional items you require to support this equipment. If the item required differs for different models of this equipment, see the "Usable On Code" column for the applicable model or models. Codes used are:

USABLE ON CODE	MODEL
MAB	M1083
MWB	M1083 w/15k Self-Recovery Winch
MAE	M1084
MAL	M1085
MWL	M1085 w/15k Self-Recovery Winch
MAM	M1086
MAF	M1088
MWF	M1088 w/15k Self-Recovery Winch
MAG	M1089
MAH	M1090
MWH	M1090 w/15k Self-Recovery Winch
MAA	M1092
MAC	M1093
MWC	M1093 w/15K Self-Recovery Winch
MAJ	M1094
MWJ	M1094 w/15k Self-Recovery Winch
MAK	M1096

Section II. ADDITIONAL AUTHORIZATION LIST

(1) National Stock Number	(2) Description CAGEC & Part Number	Usable On Code	(3) U/M	(4) Qty Auth
4010-01-470-2864	ADAPTER KIT, LADDER, S280 SHELTER (19207) 57K1950	MAB,MAC, MAL,MWB, MWC,MWL	KT	1
6665-00-859-2215	ALARM UNIT, CHEMICAL AGENT AUTOMATIC ALARM (81361) D5-15-4826		EA	1
5110-00-293-2336	AX, SINGLE BIT (19207) 6150925		EA	1
4010-00-473-6166	CHAIN, 16 FT (19207) 7077063		EA	1
2540-00-933-9033	CHAIN ASSEMBLY, TIRE (58536) A52507-2271		PR	2
5120-01-416-8568	COMBINATION TOOL, HAND (0T9K4) 595		EA	1
6665-00-859-2201	DETECTOR UNIT, CHEMICAL AGENT AUTOMATIC ALARM (81361) D5-15-4400		EA	1
8415-00-634-4658	GLOVES, LEATHER (90142) 37G2940		EA	1
5120-00-288-6574	HANDLE, MATTOCK-PICK (19207) 11677021		EA	1
2540-01-386-2952	KIT, COVER, SOFT TOP, GREEN CAMO (19207) 57K1899	MAB,MAC, MWB,MWC	KT	1
2540-01-436-9658	KIT, COVER, SOFT TOP, TAN (19207) 57K1926	MAB,MAC, MWB,MWC	KT	1
2540-01-387-5734	KIT, COVER, SOFT TOP, GREEN CAMO (19207) 57K1900	MAL,MWL	KT	1
2540-01-436-8898	KIT, COVER, SOFT TOP, TAN (19207) 57K1935	MAL,MWL	KT	1
2540-01-420-5985	KIT, COVER, SOFT TOP, GREEN CAMO (19207) 57K1901	MAH,MAJ, MWH,MWJ	KT	1
2540-01-436-9659	KIT, COVER, SOFT TOP, TAN (19207) 57K1942	MAH,MAJ, MWH,MWJ	KT	1

Section II. ADDITIONAL AUTHORIZATION LIST (CONT)

(1) National Stock Number	(2) Description CAGEC & Part Number	Usable On Code	(3) U/M	(4) Qty Auth
	KIT, CRANE ADAPTER (19207) 57K4206	MAC,MAJ, MWC,MWJ	EA	1
3990-01-444-1013	KIT, TIE DOWN, S280 SHELTER (19207) 57K1949	MAB,MAC, MWB,MWC	KT	1
3990-01-463-9191	KIT, TIE DOWN, S280 SHELTER (19207) 57K1970	MAL,MWL	KT	1
3990-01-444-0356	KIT, TIE DOWN, TANK AND PUMP UNIT (19207) 57K1954	MAB,MAC, MWB,MWC	KT	1
3990-01-444-0355	KIT, TIE DOWN, TANK AND PUMP UNIT (19207) 57K1955	MAL,MWL	KT	1
3990-01-443-8916	KIT, TIE DOWN, 500 GALLON DRUM (19207) 57K1956	MAB,MAC, MWB,MWC	KT	1
3990-01-444-0357	KIT, TIE DOWN, 500 GALLON DRUM (19207) 57K1957	MAL,MWL	KT	1
2540-01-380-4913	KIT, TROOP SEAT (19207) 57K1894	MAB,MAC, MWB,MWC	KT	1
2540-01-381-5906	KIT, TROOP SEAT (19207) 57K1896	MAL,MWL	KT	1
2540-01-386-2962	KIT, TROOP SEAT (19207) 57K1897	MAH,MAJ, MWH,MWJ	KT	1
3810-01-368-7723	LIGHT MATERIAL HANDLING CRANE KIT (12361) 1-195-0-00516	MAB,MAC, MAL,MWB, MWC,MWL	KT	1
1005-01-381-5431	MACHINE GUN RING MOUNT KIT (19207) 57K1224		KT	1
5120-00-243-2395	MATTOCK (19207) 11677022		EA	1

Section II. ADDITIONAL AUTHORIZATION LIST (CONT)

(1) National Stock Number	(2) Description CAGEC & Part Number	Usable On Code	(3) U/M	(4) Qty Auth
6115-01-432-2684	PARTS KIT, ELECTRICAL GENERATOR, 200 AMP (19207) 57K1912	MAA,MAB, MAE,MAF, MAG,MAH, MAK,MAL, MAM,MWB, MWF,MWH, MWL	KT	1
6115-01-431-5092	PARTS KIT, ELECTRICAL GENERATOR, 200 AMP (19207) 57K1918	MAC,MAJ, MWC,MWJ	KT	1
6220-01-423-2337	ROTATING WARNING LIGHT KIT (0FW39) 57K1220		KT	1
5120-00-293-3336	SHOVEL, HAND (19207) 11655784		EA	1

APPENDIX D
EXPENDABLE AND DURABLE ITEMS LIST

Section I. INTRODUCTION

D-1. SCOPE

This appendix lists all expendable and durable items that you will need to operate and maintain the MTV. This listing is for information only and is not authority to requisition the listed items. These items are authorized to you by CTA 50-970 Expendable /Durable Items (except medical, class V, repair parts, and heraldic items), or CTA 8-100, Army Medical Department Expendable/Durable Items.

D-2. EXPLANATION OF COLUMNS

a. Column (1). Item Number. This number is assigned to the entry in the listing and is referenced in the narrative instructions to identify the item (e.g. "Use cleaning compound, item 5, Appendix D.").

b. Column (2). Level. This column identifies the lowest level of maintenance that requires the item.

c. Column (3). National Stock Number. This is the national stock number assigned to the item which you can use to requisition it.

d. Column (4). Item Name, Description, Commercial and Government Entity Code (CAGEC), and Part Number. This provides the other information you need to identify the item.

e. Column (5). Unit of Measure. This code shows the physical measurement or count of an item, such as gallon, dozen, gross, etc.

Section II. EXPENDABLE AND DURABLE ITEMS LIST

(1) Item Number	(2) Level	(3) National Stock Number	(4) Item Name, Description, CAGEC, Part Number	(5) U/M
1	C	6850-00-174-1806	Antifreeze, (MIL-A-11755)(81349) 55 gal drum	dr
2	C	6850-00-181-7940	Antifreeze, Permanent (MIL-A-46153)(81349) 55 gal drum	dr

Section II. EXPENDABLE AND DURABLE ITEMS LIST

(1) Item Number	(2) Level	(3) National Stock Number	(4) Item Name, Description, CAGEC, Part Number	(5) U/M
	C	6850-00-926-2275	Cleaning Compound, Windshield (O-C-1901) (81349) 1 pint	pt
3	C	9150-00-664-0047	Damping Fluid (VV-D-1078) (81348) 1 lb can	lb
	C	8415-00-641-4601	Gloves, Rubber (ZZ-G-381) (81348) 1 pr	pr
	C	4240-00-052-3776	Goggles, Industrial (A-A-1110) (58536) 1 pr	pr
4	C		Grease, Automotive and Artillery (GAA) (MIL-G-10924) (81349) 2-1/4 oz tube	
		9150-01-197-7688	14 oz cartridge	tu
		9150-01-197-7693	35 lb can	ca
		9150-01-197-7692		cn
5	C		Hydraulic Fluid, Petroleum Base (MIL-H-5606) (81349)	
		9150-00-252-6383	1 qt can	qt
		9150-00-223-4134	1 gal can	gal
		9150-00-082-7524	10 gal drum	dr
		9150-00-265-9408	55 gal drum	dr
7	C		Oil, Fuel, Diesel, DF-1, Winter (VV-F-800) (91348)	
		9140-00-286-5286	Bulk	gal
		9140-00-286-5288	55 gal drum, 16 gage	dr
		9140-00-286-5289	55 gal drum, 18 gage	dr
8	C		Oil, Fuel, Diesel, DF-2, Regular VV-F-800) (81348)	
		9140-00-286-5294	Bulk	gal
		9140-00-286-5296	55 gal drum, 16 gage	dr
		9140-00-286-5297	55 gal drum, 18 gage	dr
9	C	9150-01-035-5390	Oil, Lubricating Gear, GO 75W (MIL-L-2105C)	
		9150-01-035-5391	1 qt can	qt
			5 gal drum	gal

Section II. EXPENDABLE AND DURABLE ITEMS LIST

(1) Item Number	(2) Level	(3) National Stock Number	(4) Item Name, Description, CAGEC, Part Number	(5) U/M
10	C		Oil, Lubricating, Gear, GO 80W-90 (MIL-L-2105C)	
		9150-01-035-5392	1 qt can	qt
		9150-01-035-5393	5 gal can	cn
		9150-01-035-5394	55 gal drum	dr
11	C		Oil, Lubricating, OE/HDO 10 (MIL-L-2104)	
		9150-00-183-7807	bulk	gal
		9150-00-186-6668	5 gal can	cn
		9150-00-191-2772	55 gal drum, 16 gage	dr
12	C		Oil, Lubricating, OE/HDO 10W (MIL-L-2104)	
		9150-00-189-6727	1 qt can	qt
13	C		Oil, Lubricating, OE/HDO 15W-40 (MIL-M-2104)	
		9150-01-152-4117	1 qt can	qt
		9150-01-152-4118	5 gal can	cn
		9150-01-152-4119	55 gal drum	dr
14	C		Oil, Lubricating, OE/HDO 30 (SAE 30) (MIL-L-2104)	
		9150-00-183-7808	bulk	gal
		9150-00-186-6681	1 qt can	qt
		9150-00-188-9858	5 gal can	cn
		9150-00-189-6729	55 gal drum, 18 gage	dr
15	C		Oil, Lubricating, OE/HDO 40 (MIL-L-2104)	
		9150-00-405-2987	bulk	gal
		9150-00-189-6730	1 qt can	qt
		9150-00-188-9862	5 gal can	cn
16	C		Oil, Lubricating, OE/HD (MIL-L-46167), Arctic	
		9150-00-402-4478	1 qt can	qt
		9150-00-402-2372	5 gal can	cn
		9150-00-491-7197	55 gal drum	dr
17	C	7920-00-205-1711	Rag, Wiping, Cotton and Cotton-Synthetic	lb

Section II. EXPENDABLE AND DURABLE ITEMS LIST

(1) Item Number	(2) Level	(3) National Stock Number	(4) Item Name, Description, CAGEC, Part Number	(5) U/M
18	C	7930-00-634-3935	Soap, Laundry (54748) 539-200LBCHIPS 200 lb drum	 dr
19	C	 6850-00-281-1985 6850-00-664-5685	Solvent, Dry Cleaning SD (P-D-680) 1 gal can 1 qt can	 gal qt

APPENDIX E
STOWAGE LOCATION/DECAL/STENCIL GUIDE

Section I. INTRODUCTION

E-1. SCOPE

This appendix shows the location for stowage of equipment and material required to be carried on M1083 series vehicles and locations of decals, and stencils that are required to be in place on the vehicle.

Section II. STOWAGE LOCATION/DECAL/STENCIL GUIDE

E-2. GENERAL

The equipment stowage locator is designed to help inventory items required for safe and efficient operation. The equipment locator is representative of BII and applicable AAL stowage on all M1083 series vehicles.

E-3. STOWAGE LOCATION/DECAL/STENCIL GUIDE

a. Stowage Locations, All Vehicles.

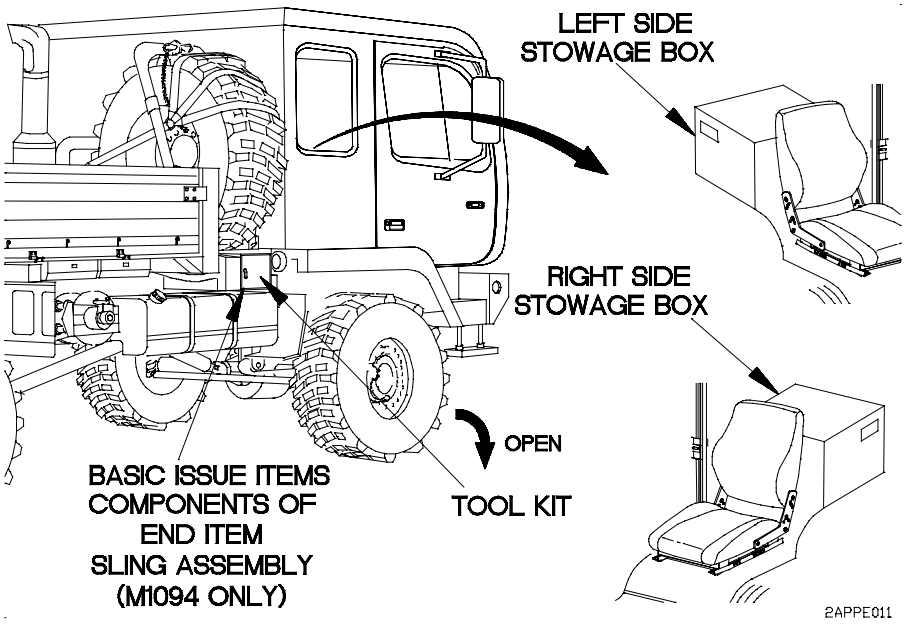

E-3. STOWAGE LOCATION/DECAL/STENCIL GUIDE (CONT)

b. Stowage Location, M1089.

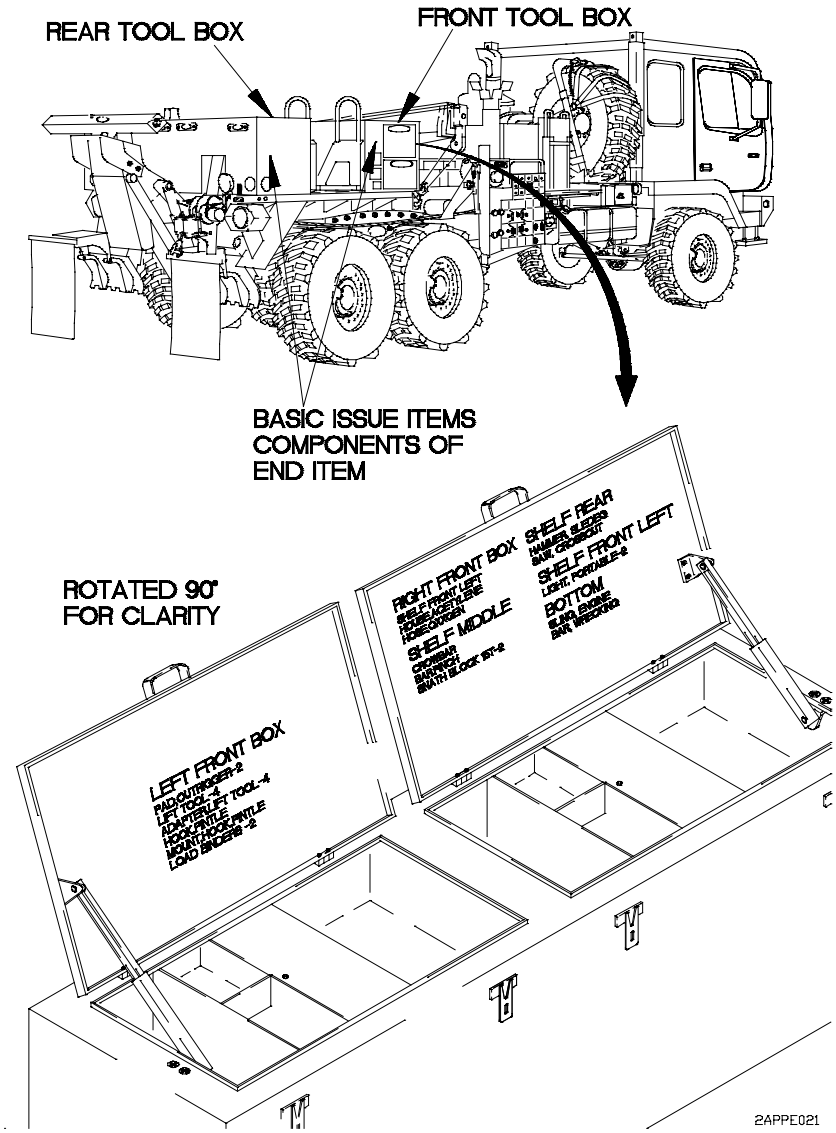

b. Stowage Location, M1089 (Cont).

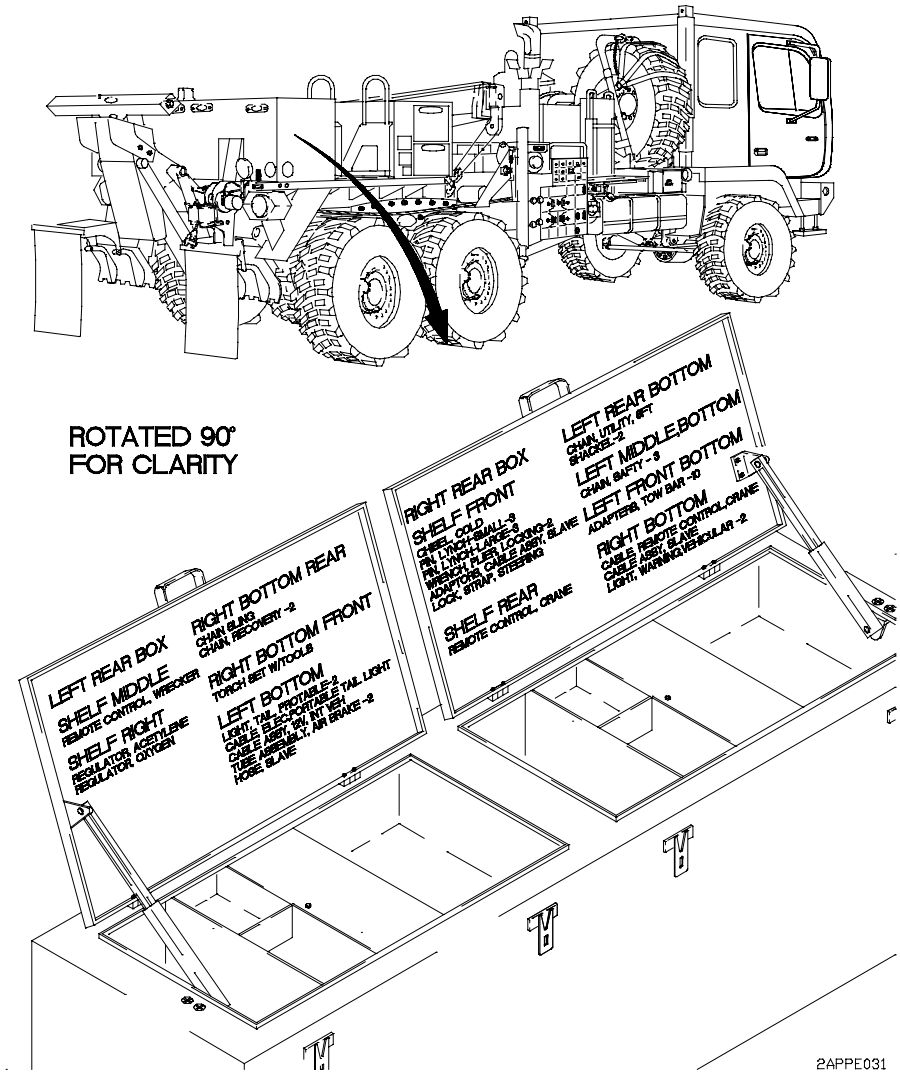

E-3. STOWAGE LOCATION/DECAL/STENCIL GUIDE (CONT)

b. Stowage Location, M1089 (Cont).

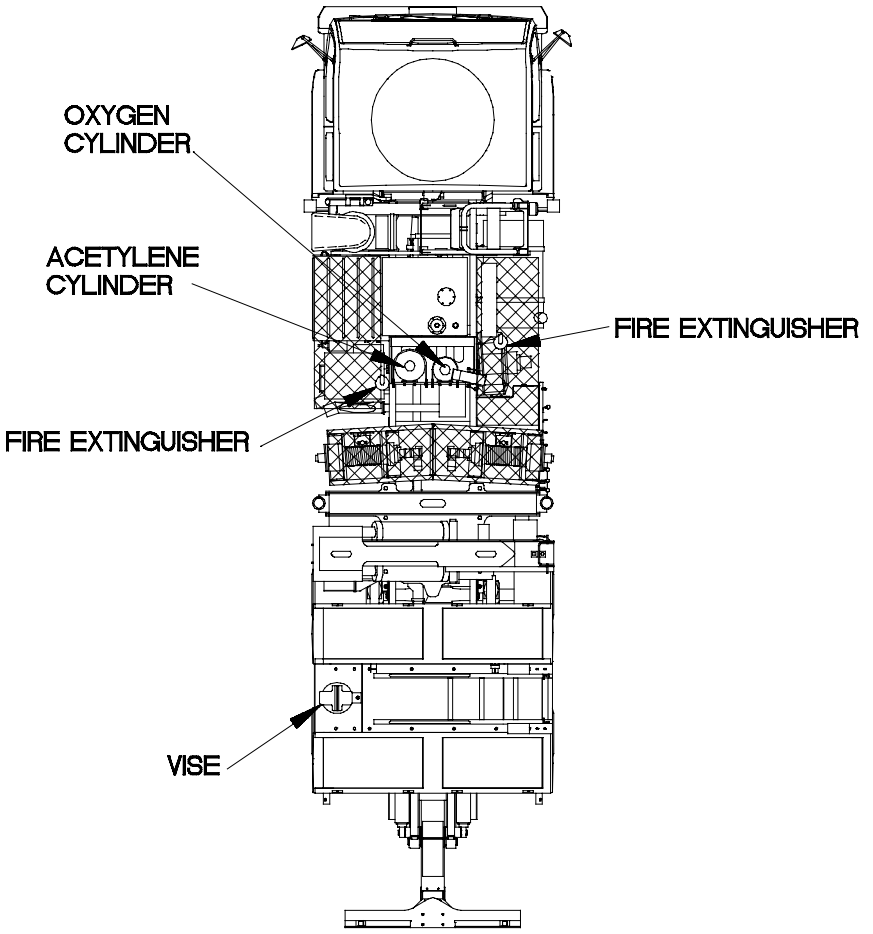

c. Decals/Stencils, All Vehicles.

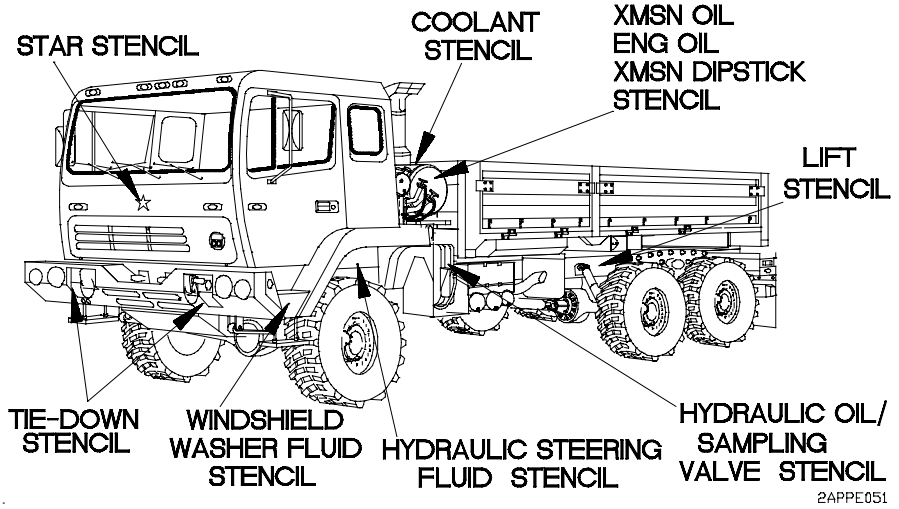

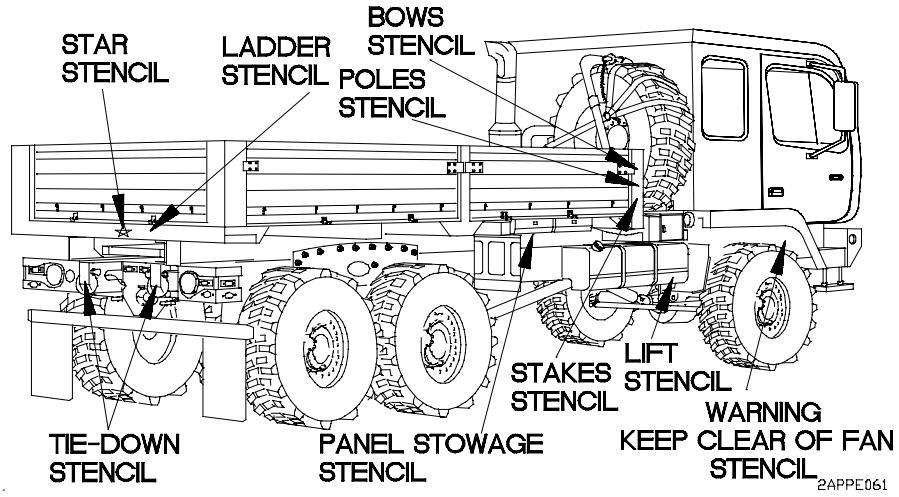

E-4. STOWAGE LOCATION/DECAL/STENCIL GUIDE (CONT)

c. Decals/Stencils, All Vehicles (Cont).

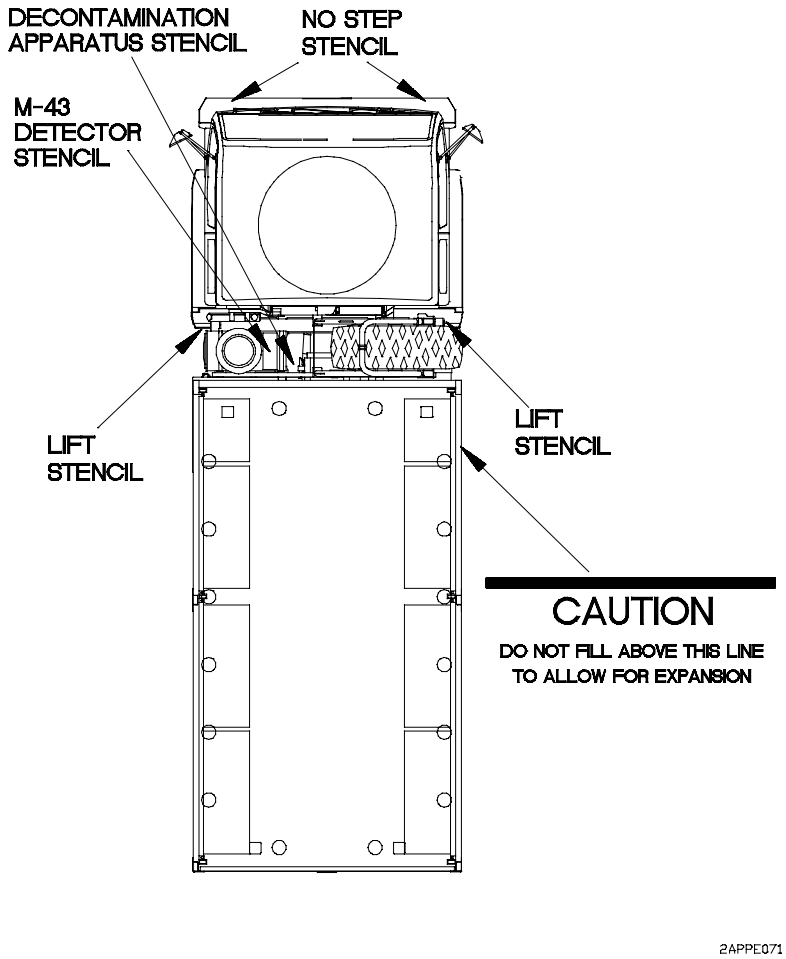

c. Decals/Stencils, All Vehicles (Cont).

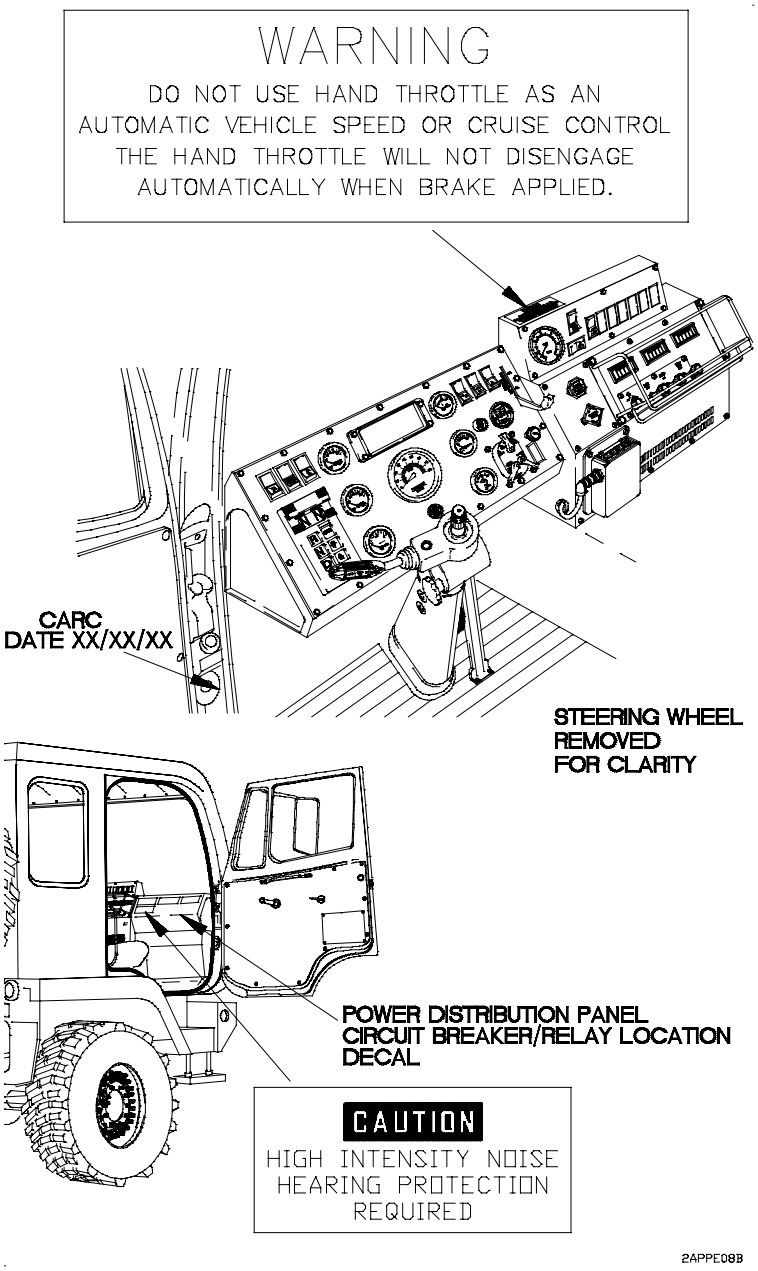

E-4. STOWAGE LOCATION/DECAL/STENCIL GUIDE (CONT)

c. Decals/Stencils, All Vehicles (Cont).

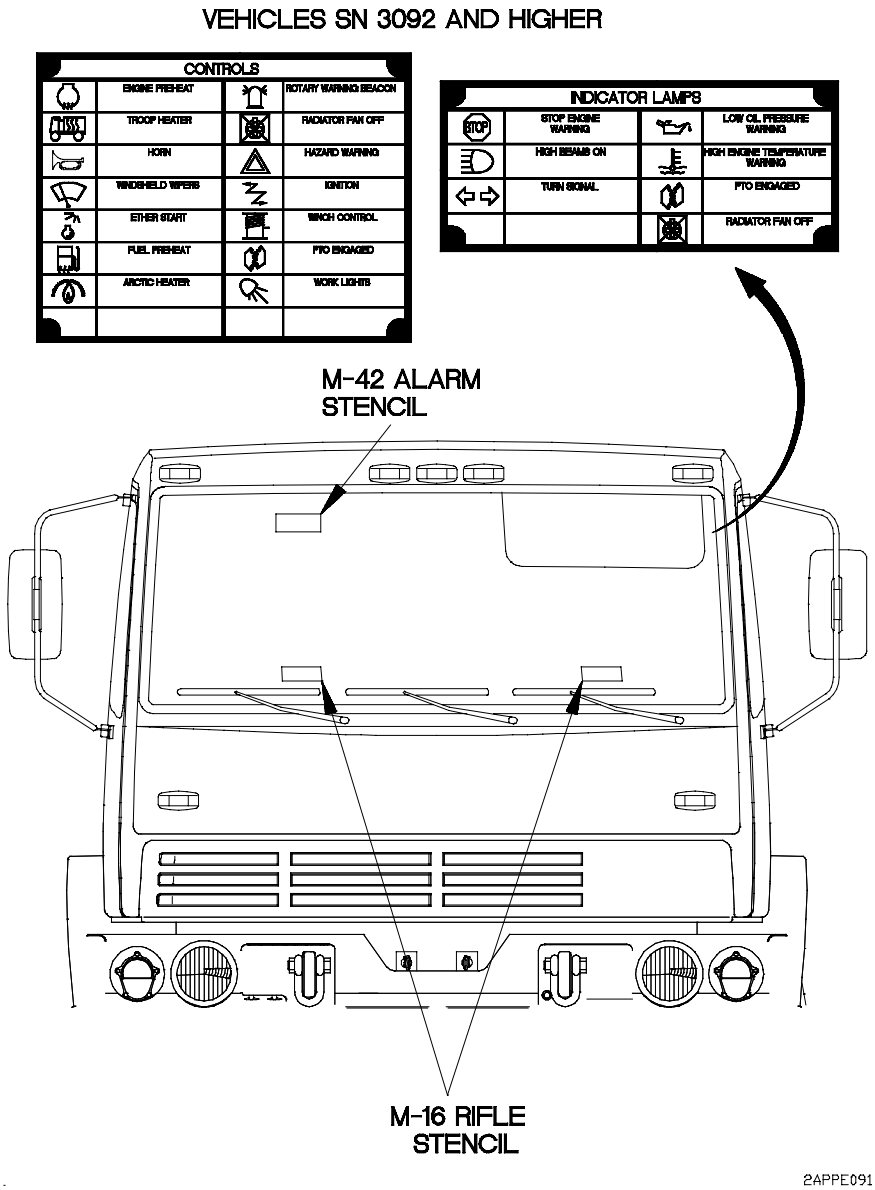

d. Stencils, M1084/M1086.

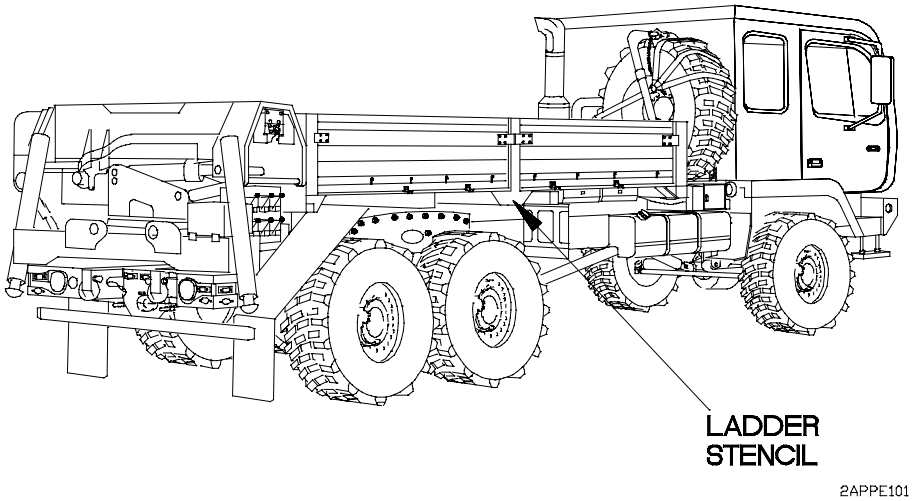

E-4. STOWAGE LOCATION/DECAL/STENCIL GUIDE (CONT)

e. Stencils, M1089.

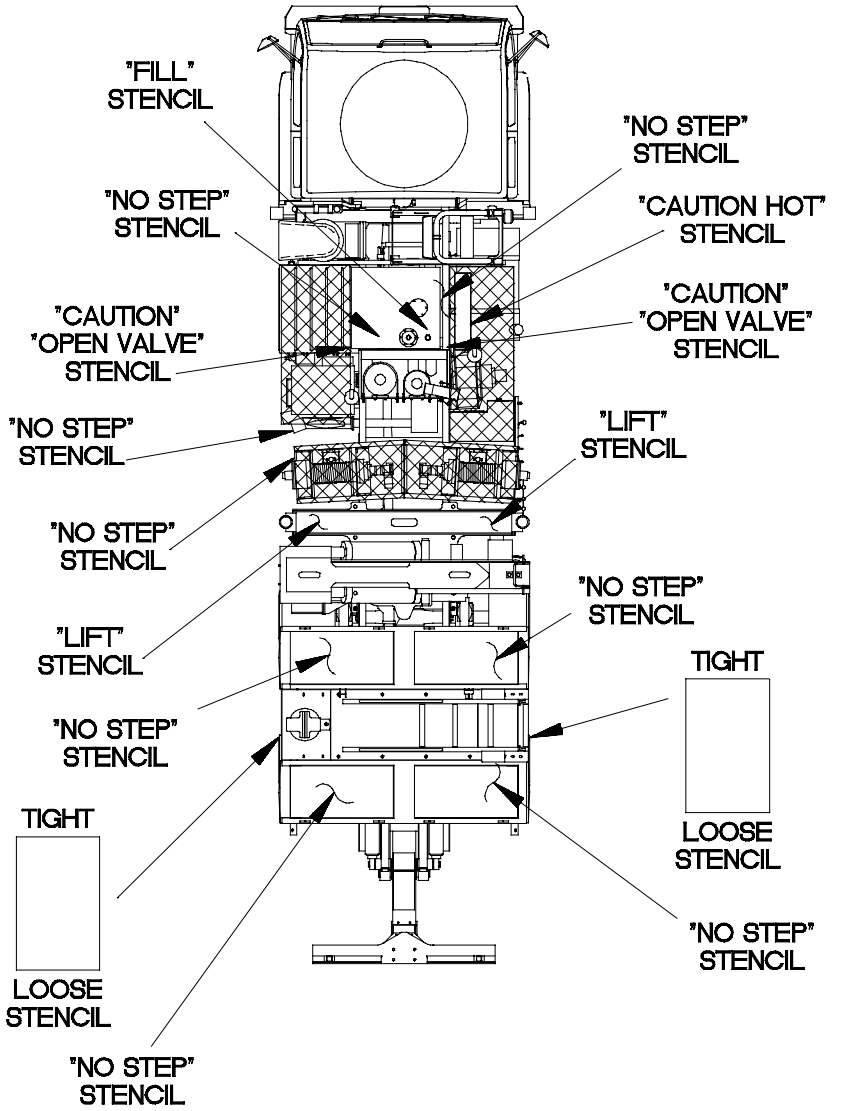

APPENDIX F
LUBRICATION ORDER

Section I. INTRODUCTION

F-1. GENERAL

This appendix gives lubrication requirements for the vehicle which are the responsibility of the Operator/Crew.

a. Adherence. Intervals (on-condition or hard time) and the related man-hour times are based on normal operation. The man-hour time specified is the time needed to do all the services prescribed for a particular interval. On-condition (OC) oil sample intervals shall be applied unless changed by the Army Oil Analysis Program (AOAP) laboratory. Change the hard time interval if lubricants are contaminated or if operating the equipment under adverse operating conditions, including longer-than-usual operating hours. The calendar interval may be extended during periods of low activity. If extended, adequate preservation precautions must be taken. Hard time intervals will be applied in the event AOAP laboratory support is not available. Hard time intervals must be applied during the warranty period.

Intervals shown in this appendix are based on mileage/calendar times. The lubrication for the vehicle is to be performed at whichever interval occurs first.

WARNING

- **Dry Cleaning Solvent (P-D-680) is TOXIC and flammable. Wear protective goggles and gloves; use only in well-ventilated area; avoid contact with skin, eyes, and clothes, and do not breath vapors. Keep away from heat or flame. Never smoke when using Dry Cleaning Solvent; the flashpoint for Type I Dry Cleaning Solvent is 100°F (38°C) and for Type II is 138°F (50°C). Failure to comply may result in serious injury or death to personnel.**

- **If personnel become dizzy while using Dry Cleaning Solvent, immediately get fresh air and medical help. If Dry Cleaning Solvent contacts skin or clothes, flush with cold water. If Dry Cleaning Solvent contacts eyes, immediately flush eyes with water and get medical attention. Failure to comply may result in serious injury or death to personnel.**

b. Cleaning Fittings Before Lubrication. Clean parts with Dry Cleaning Solvent (SD P-D-680) or equivalent. Dry before lubricating. Dashed arrows indicate lubrication on both sides of the equipment.

F-1. GENERAL (CONT)

c. Lubrication After Fording. If a fording operation occurs, lubricate all fittings below fording depth and check submerged gear boxes for presence of water.

d. Lubrication After High-Pressure Washing. After a thorough washing, lubricate all grease fittings and oil can points outside and underneath vehicle.

e. Lubrication Local Views. A reference to the appropriate localized view is given after most lubrication entries. Lubrication local views begin on page F-10.

F-2. CORROSION CONTROL

Refer to para 1-3 for appropriate corrosion control procedures.

F-3. AOAP SAMPLING INTERVAL

Engine/transmission oil must be sampled every 90 days as prescribed by DA Pam 738-750. Hydraulic fluids must be sampled annually as prescribed by DA Pam 738-750.

F-4. HARD TIME LUBRICATION INTERVALS

For equipment under manufacturer's warranty, hard time oil service intervals shall be followed. Intervals shall be shortened if lubricants are known to be contaminated or if operation is under adverse conditions (e.g. longer than usual operating hours, extended idling periods, extreme dust, etc.).

F-5. LUBRICATION KEY

LUBRICANTS	
Specification	**Type**
MIL-L-2104 (OE/HDO)	Lubricating Oil, Internal Combustion Engine, Combat/Tactical Service
MIL-H-5606 (OHA)	Hydraulic Fluid, Petroleum Base, Aircraft, Missile, and Ordnance
MIL-G-10924 (GAA)	Grease, Automotive and Artillery
V-V-D-1078	Damping Fluid

DESCRIPTION	CAPACITY	EXPECTED TEMPERATURES		
		Above +40°F (Above +4°C)	+40°F to -15°F (+4°C to -26°C)	-15°F to -50°F (-26°C to -46°C)
Engine crankcase	25 qt (24 L)	OE/HDO-15/40	OE/HDO-15/40	OEA
Transmission (total system) (all models except M1088 and M1089)	49.3 qt (46.7 L)	OE/HDO-15/40	OE/HDO-10	OEA
Transmission (at oil change) (all models except M1088 and M1089)	36.8 qt (34.7 L)	OE/HDO-15/40	OE/HDO-10	OEA
Transmission (total system) (M1088 and M1089)	58.6 qt (55.5 L)	OE/HDO-15/40	OE/HDO-10	OEA
Transmission (at oil change) (M1088 and M1089)	31.8 qt (30.0 L)	OE/HDO-15/40	OE/HDO-10	OEA
Steering system	5 qt (4.8 L)	OE/HDO-10	OE/HDO-10	OEA
Hydraulic tank (M1089)	74 gal (280 L)	OE/HDO-10	OE/HDO-10	OEA
Hydraulic reservoir (Except M1089)	27 GAL (102.2 l)	OE/HDO-10	OE/HDO-10	OEA
LMHC boom sheave	As required	GAA	GAA	GAA
Oil can points	As required	OE/HDO-10	OE/HDO-10	OEA
Front lifting beam	As required	GAA	GAA	GAA
Spreader bars	As required	GAA	GAA	GAA
Air/hydraulic power unit	3 qt (2.8 L)	OHA	OHA	OHA
LMHC cable	As required	OE/HDO-10	OE/HDO-10	OEA
Fifth wheel slide path	As required	GAA	GAA	GAA
Fifth wheel	As required	GAA	GAA	GAA
Crossbar screws	As required	GAA	GAA	GAA
Towing Pintle Assembly	As required	GAA	GAA	GAA
Gladhand Coupler Seals	As Required	VV-D-1078	VV-D-1078	VV-D-1078
30 Ton snatch block	As required	GAA	GAA	GAA

F-5. LUBRICATION KEY (CONT)

COOLANT	
Specification	**Type**
MIL-A-46153	Antifreeze, Ethylene Glycol, Inhibited, Heavy Duty, Single Package

DESCRIPTION	CAPACITY	EXPECTED TEMPERATURES		
		Above +40°F (Above +4°C)	+40°F to -15°F (+4°C to -26°C)	-15°F to -50°F (-26°C to -46°C)
Cooling system (engine only)	14 qt (13 L)	MIL-A-46153	MIL-A-46153	N/A
Cooling system (total system)	50.3 qt (47.6 L)	MIL-A-46153	MIL-A-46153	N/A
Cooling system (total system) (M1088, M1089)	52.8 qt (49.9 L)	MIL-A-46153	MIL-A-46153	N/A

CLEANING AGENT	
Specification	**Type**
P-D-680	Dry Cleaning Solvent, SD-II
O-C-1901	Cleaning Compound, Windshield

DESCRIPTION	CAPACITY	EXPECTED TEMPERATURES		
		Above +15°F (Above -9°C)	+15°F to -15°F (-9°C to -26°C)	-15°F to -50°F (-26°C to -46°C)
All metal parts as required	N/A	P-D-680 (all temperatures)		
Windshield Washer Reservoir	7.5 qt (7.1 L)	2/3 water to 1/3 O-C-1901	1/2 water to 1/2 O-C-1901	1/3 water to 2/3 O-C-1901

F-6. LUBRICATION INTERVALS

INTERVALS

D . . . . . Daily
W . . . . . Weekly
M . . . . . Monthly

VEHICLES	TOTAL MAN HOURS FOR EACH INTERVAL		
	D	W	M
TRUCK, CARGO, MTV, M1083	0.3	N/A	0.2
TRUCK, CARGO, MTV, W/MHC, M1084	0.3	N/A	0.3
TRUCK, CARGO, MTV, LWB, M1085	0.3	N/A	0.2
TRUCK, CARGO, MTV, LWB, W/MHC, M1086	0.3	N/A	0.3
TRUCK, TRACTOR, MTV, M1088	0.3	0.3	0.4
TRUCK, WRECKER, MTV, M1089	0.3	0.3	0.4
TRUCK, DUMP, MTV, M1090	0.3	N/A	0.4
TRUCK, CHASSIS, MTV, M1092	0.3	N/A	0.2
TRUCK, CARGO, MTV, AIR DROP, M1093	0.3	N/A	0.2
TRUCK, DUMP, MTV, AIR DROP, M1094	0.3	N/A	0.4
TRUCK, CHASSIS, MTV, LWB, M1096	0.3	N/A	0.2

F-7. LUBRICATION LOCATOR VIEWS

LUBRICANT	INTERVAL
Cable Lubricate cable after use with **OE/HDO**	
Boom Sheave Lubricate boom sheave after use with **GAA**.	

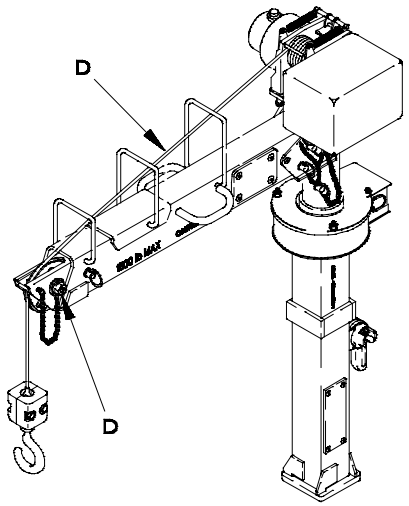

LIGHT MATERIAL HANDLING CRANE (LMHC)

LUBRICANT	INTERVAL
Cab Lift Cylinder Lubricate. (See note 13 and view R)	
Power Steering Reservoir Check oil level at dipstick. (See note 9 and view A) **OE/HDO**	
Engine Crankcase Check oil level at dipstick. (See note 1 and view A) **OE/HDO**	
Cooling System Check coolant level. (See note 4 and view D)	
Transmission/Transfer Case Check oil level at dipstick. (See note 2 and view B) **OE/HDO**	
Front Lifting Beam Lubricate left and right sides (See note 11 and view N) **GAA**	
Hydraulic Reservoir Check hydraulic oil level at hydraulic oil level gage. (See note 3 and view C) **OE/HDO**	
Air/Hydraulic Power Unit Check hydraulic oil level at dipstick. (See note 8 and view H) **OHA**	
Spreader Bars Lubricate left and right sides. (See note 12 and view P) **GAA**	
Gladhand Coupler Seal Lubricate seal (front and rear). (See note 10 and view J)	

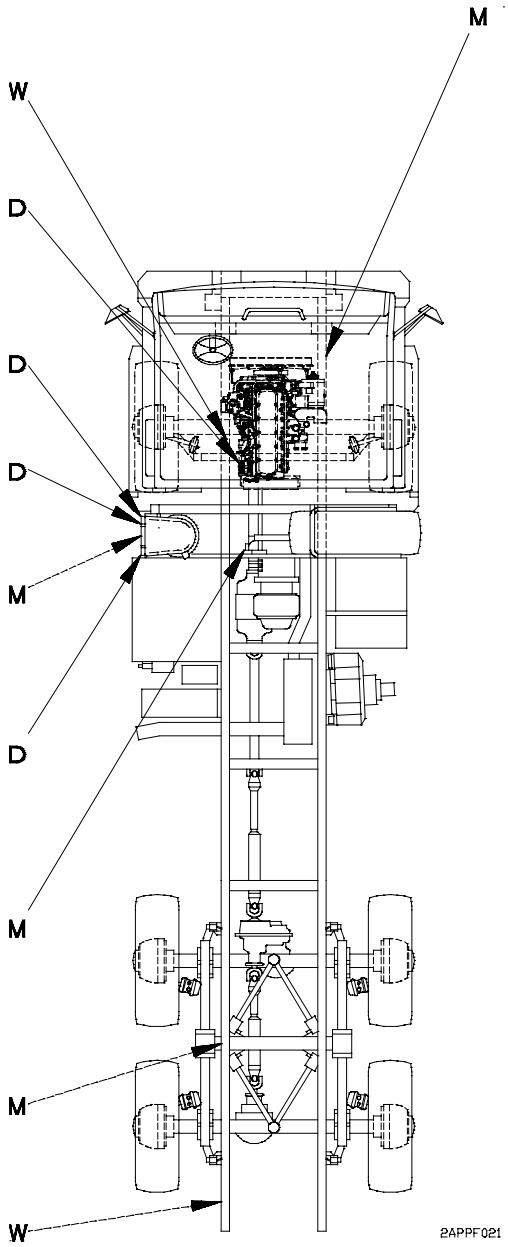

F-7. LUBRICATION LOCATOR VIEWS (CONT)

LUBRICANT **INTERVAL**

Gladhand Coupler Seal
Lubricate seal weekly.
(See note 10 and view K)

Fifth Wheel
Coat fifth wheel ramps, slide path and top plate with GAA. Lubricate grease fittings with GAA.
(See note 5 and views E, G, and M)

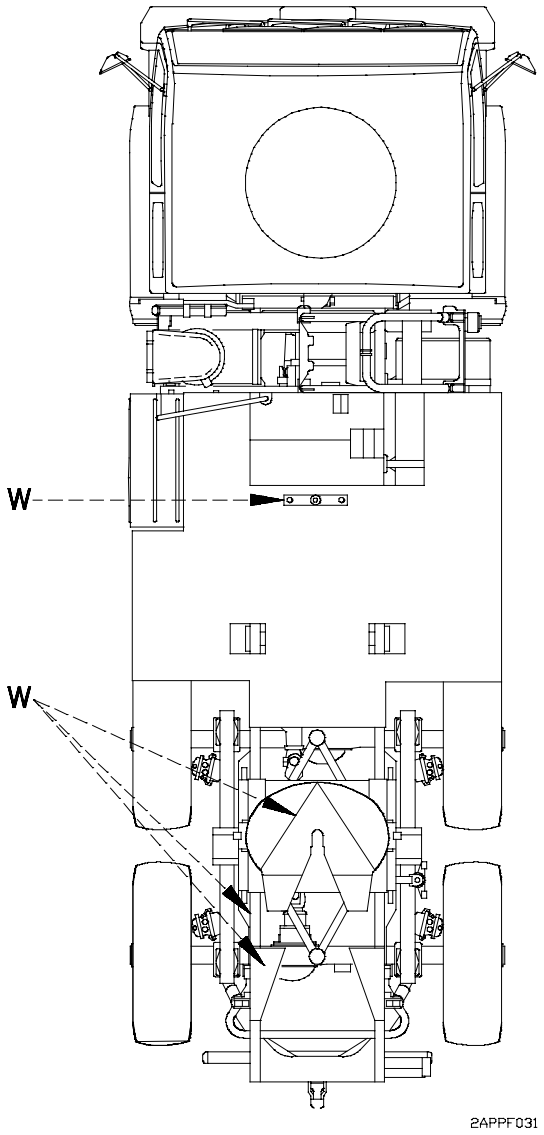

M1088 TRACTOR

LUBRICANT **INTERVAL**

Hydraulic Tank
Check hydraulic oil level at hydraulic oil view gage and thermometer.
(See note 6 and view F)
OE/HDO

Towing Pintle Assembly
Lubricate Towing Pintle Assembly after use with GAA (See view Q)

30 Ton Snatch Block
Lubricate snatch block after use with GAA
(See view L)

Crossbar Screws
Lubricate threads liberally every week with GAA.

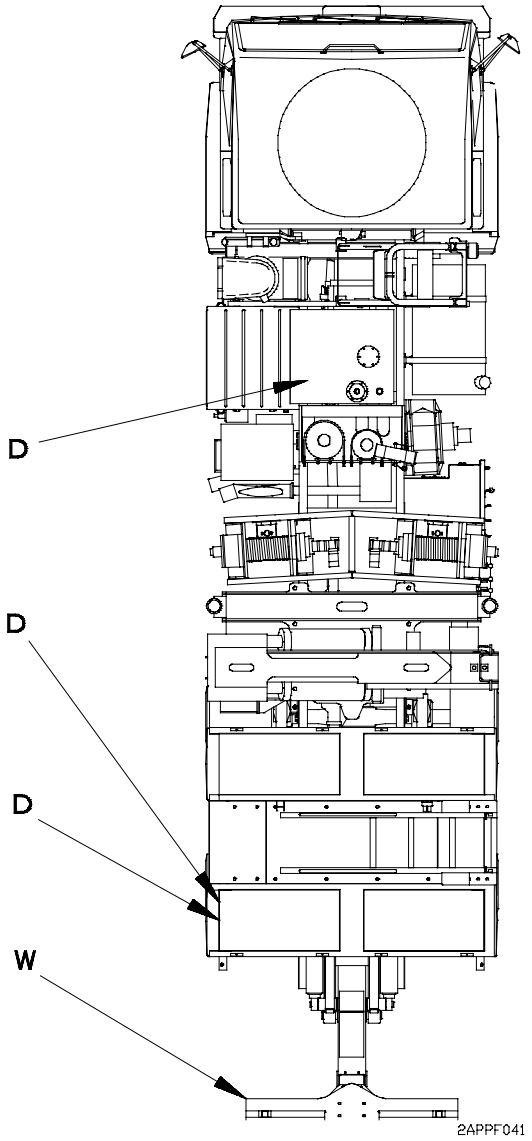

M1089 WRECKER

F-8. LUBRICATION LOCAL VIEWS

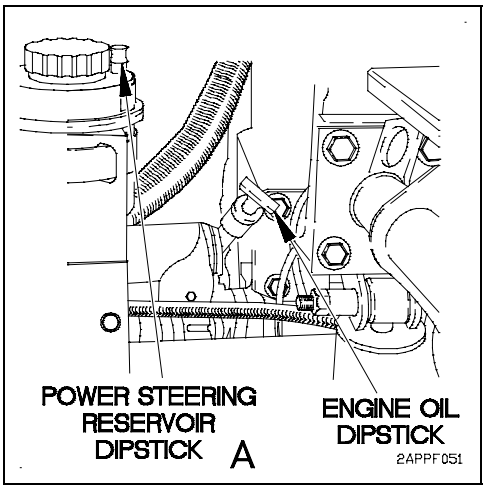

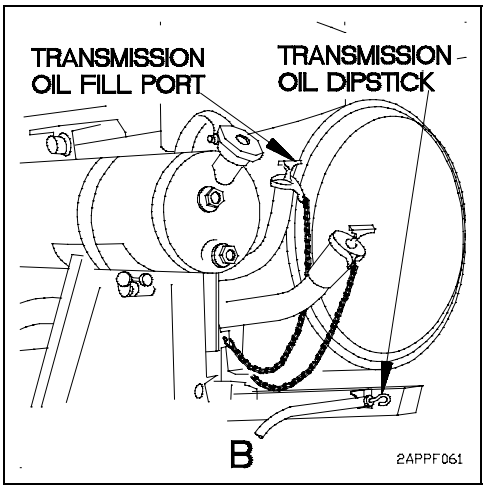

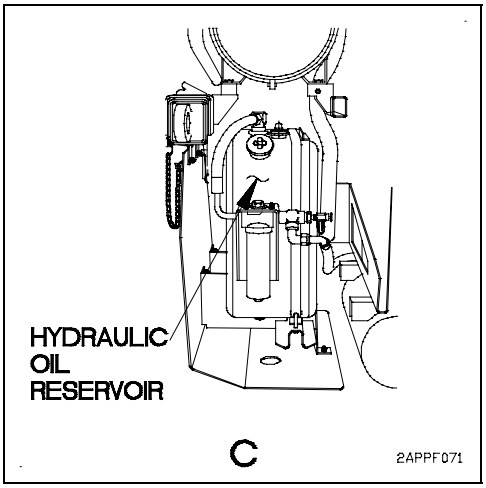

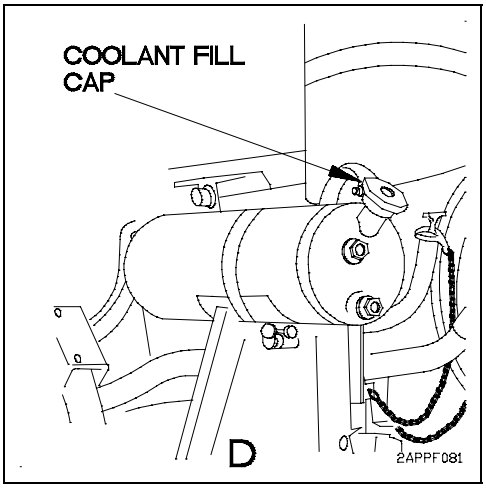

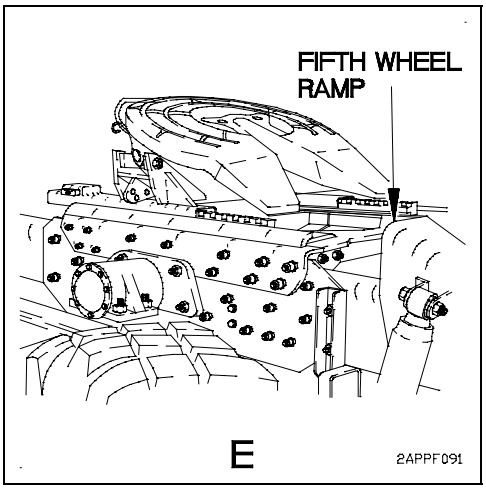

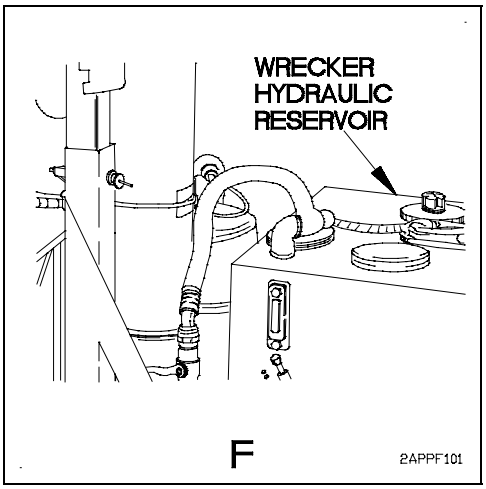

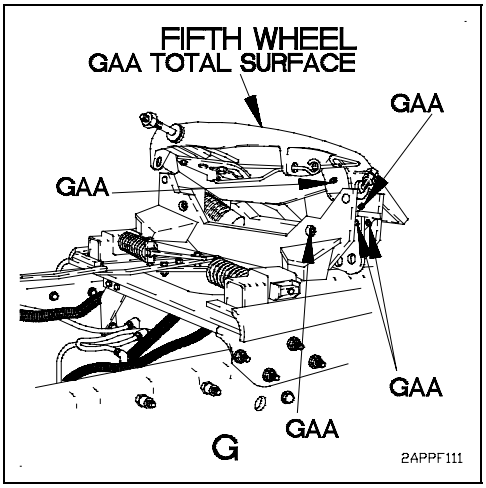
FIFTH WHEEL
GAA TOTAL SURFACE
GAA
GAA
GAA
GAA
G
2APPF111

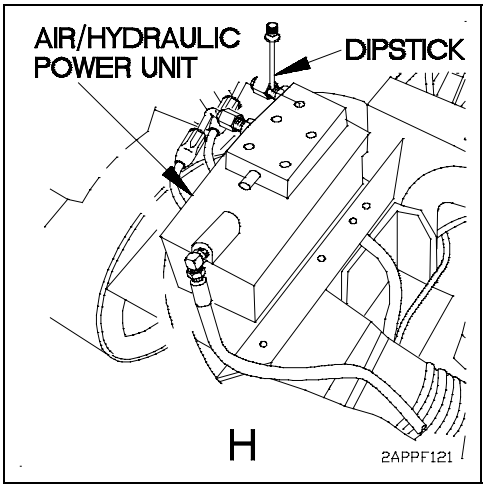
AIR/HYDRAULIC
POWER UNIT
DIPSTICK
H
2APPF121

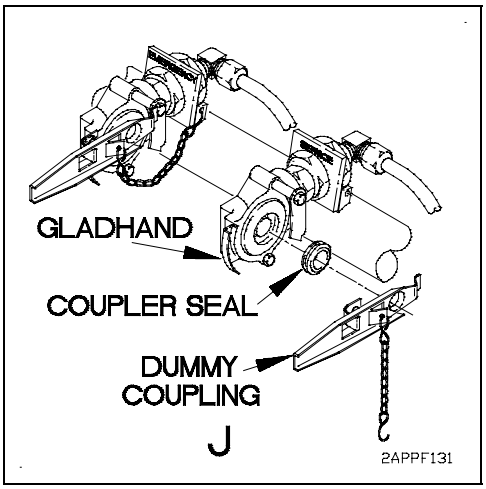
GLADHAND
COUPLER SEAL
DUMMY
COUPLING
J
2APPF131

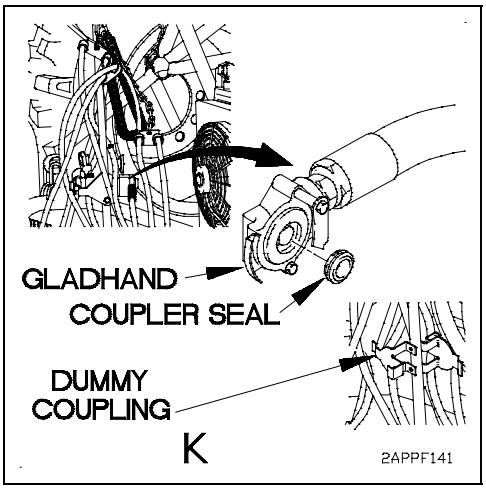
GLADHAND
COUPLER SEAL
DUMMY
COUPLING
K
2APPF141

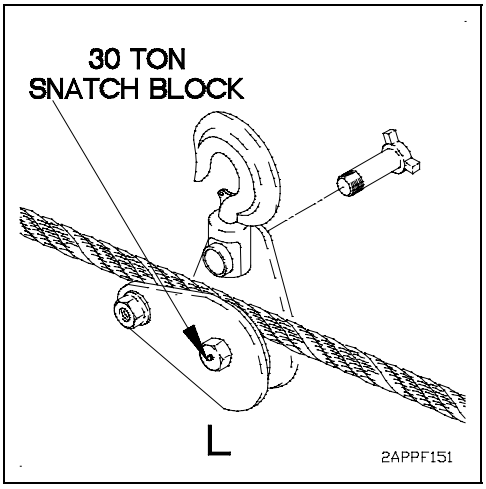
30 TON
SNATCH BLOCK
L
2APPF151

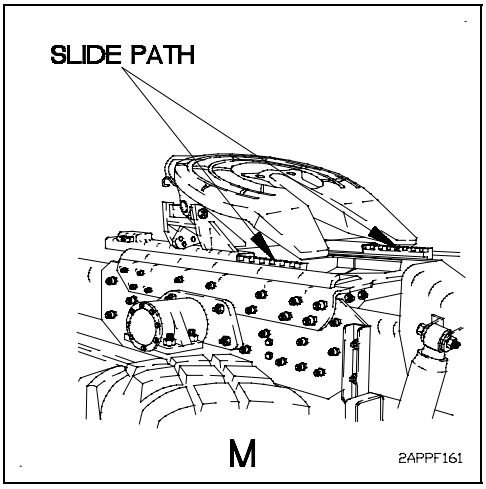
SLIDE PATH
M
2APPF161

F-8. LUBRICATION LOCAL VIEWS (CONT)

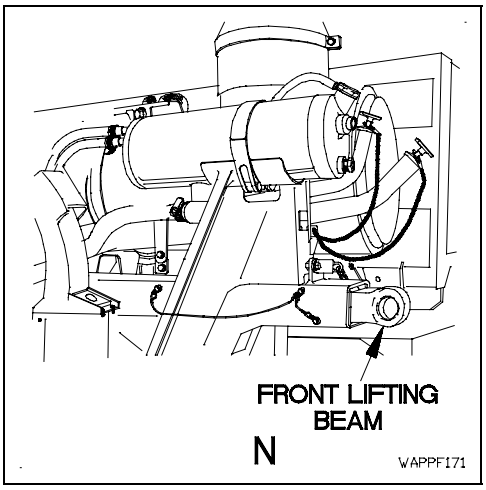

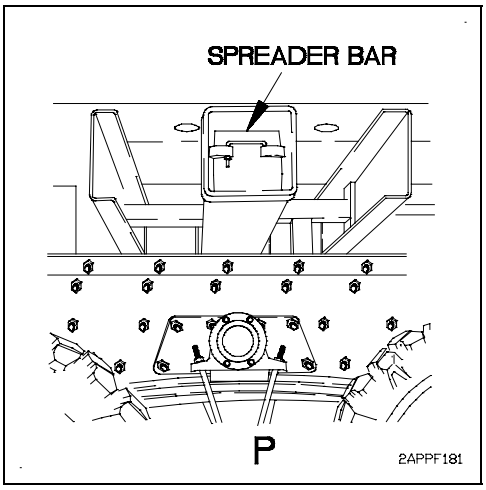

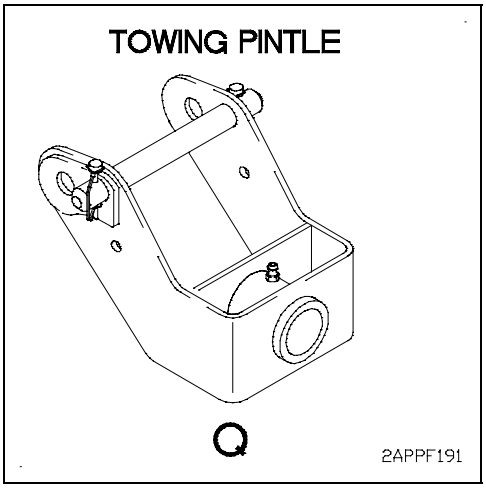

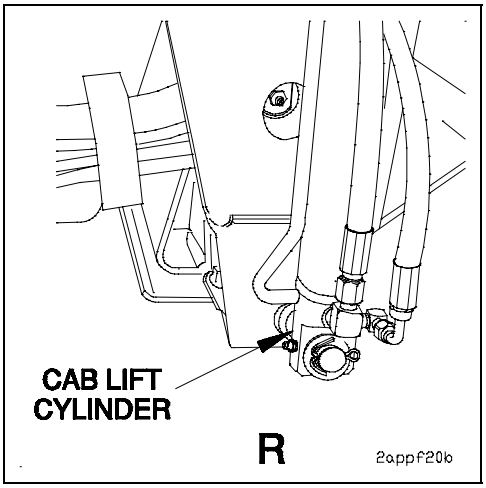

F-9. LUBRICATION NOTES

WARNING

Engine dipstick is located close to starter solenoid connectors which contain 24 vdc and high amperage. Use caution removing/installing engine dipstick to prevent shorting across starter solenoids when checking engine oil level. Failure to comply may result in serious injury or death to personnel or damage to equipment.

1. Check engine oil level daily. Oil is full when level is within crosshatch marks on the dipstick. Do not overfill. Fill crankcase with OE/HDO specified for the ambient temperature.

2. Check transmission/transfer case oil level daily with vehicle parked on level surface and transmission range selector in Neutral (N). Safe operating oil level is when the transmission\transfer case fluid level is halfway between the "HOT ADD" line and "HOT FULL" line on the dipstick. With the engine at idle (500-800 rpm) for one minute and engine coolant temperature at normal operating range (165-180°F (74-82°C)), check transmission/transfer case oil level. If the level is below the "HOT ADD" line, add one (1) quart of oil and check oil level. Repeat this procedure until oil level is halfway between the "HOT ADD" line and "HOT FULL" line. If the level is above the "HOT FULL" line, drain one (1) quart of oil from the transmission and check oil level. Repeat this procedure until oil level is halfway between the "HOT FULL" line and "HOT ADD" line. Use OE/HDO oil specified for the ambient temperature.

3. Check hydraulic fluid level daily. Remove hydraulic fluid reservoir cap to visually inspect hydraulic fluid level. TANK IS CONSIDERED FULL WHEN FLUID LEVEL IN TANK IS VISIBLE AT FILL PORT and fluid level gage reads F (full). Fill hydraulic fluid reservoir with OE/HDO specified for the ambient temperature.

4. Check coolant level daily. Surge tank level is acceptable when coolant is visible in lower sight glass. If coolant is not visible in lower sight glass, fill surge tank until coolant is visible half way in upper sight glass. Fill surge tank with MIL-A-46153 or MIL-A-11755 coolant.

5. Apply a thin coat of GAA to fifth wheel ramps and top plate weekly. Lubricate grease fittings (using a low pressure lubrication gun) every week with GAA.

6. Check hydraulic oil level daily. Oil level should be no more than 0.75 in. (1.9 cm) below black line on hydraulic oil view gage. Fill hydraulic oil reservoir with OE/HDO specified for the ambient temperature.

7. Lubricate all oil can points every 1,000 mi. (1,600 km) or once a month (whichever comes first). Lubricate with OE/HDO specified for ambient temperature. The operator/crew is responsible for lubricating the following points.

   a. Oil can Points-All MTV Models.

      (1) Door latches and hinges
      (2) Cab latches (M1093 and M1094 only)
      (3) Battery box cover latches

   b. Oil can Points-MTV Cargo Trucks.

      (1) Tailgate hinge pins
      (2) Intermediate hinge pins
      (3) Side hinge pins
      (4) Cargo bed tiedown rings

F-9. LUBRICATION NOTES (CONT)

c. Oil can Points-MTV Cargo Trucks with Material Handling Crane (MHC).

(1) MHC control lever pivot points on manual controls
(2) MHC hand pump handle mounting/hinge pins
(3) MHC turntable locking pin
(4) MHC cable hook swivel points

d. Oil can Points-Dump Truck.

(1) Cab protector locking pins and hinge pins
(2) Tailgate release handle linkage
(3) Tailgate post hinge assemblies
(4) Storage boxes latches and hinges
(5) Dump body tiedown rings

e. Oil can Points-Tractor (Fifth Wheel).

(1) Plunger lock latch
(2) Coupler jaw linkage

f. Oil can Points-Wrecker.

(1) Storage boxes latches and hinges
(2) MHC control lever pivot points on manual controls
(3) MHC cable tie off point pin on hook block
(4) Crossbar thrust bearing
(5) Upper sheave of pay-out assemblies
(6) Fairleads

g. Oil can Points-Cargo and Dump Truck (Air Drop).

Spare tire retainer davit collar

WARNING

Hydraulic fluid (MIL-H-5606A) is TOXIC. Wear protective goggles and gloves; use only in well ventilated area; avoid contact with skin, eyes, and clothes. Skin and clothing that come in contact with hydraulic fluid should be washed immediately. Saturated clothing should be removed immediately. Failure to comply may result in serious injury to personnel.

8. Check air/hydraulic power unit fluid level monthly. Fluid level should be between LOW level mark and FULL level mark on dipstick. Fluid level checks can be performed with the cab raised or lowered. Fluid level checks should be performed with the cab lowered, if possible. Remove dipstick from air/hydraulic power unit, wipe dipstick clean and insert in air/hydraulic power unit (Do Not thread dipstick in air/hydraulic power unit) remove dipstick and read fluid level. Install dipstick in air/hydraulic power unit.

9. Check power steering oil level weekly. Fill reservoir with OE/HDO specified for the ambient temperature. Reservoir is full when oil is between the two marks on the dipstick. Do not overfill. Remove dipstick, wipe clean and install dipstick fully into reservoir. Remove dipstick and read oil level.

10. Lubricate front and rear gladhand and tractor air brake hose gladhand coupler seals weekly with VV-D-1078 Damping Fluid.

WARNING

- **Dry Cleaning Solvent (P-D-680) is TOXIC and flammable. Wear protective goggles and gloves; use only in well-ventilated area; avoid contact with skin, eyes, and clothes, and do not breath vapors. Keep away from heat or flame. Never smoke when using Dry Cleaning Solvent; the flashpoint for Type I Dry Cleaning Solvent is 100°F (38°C) and for Type II is 138°F (50°C). Failure to comply may result in serious injury or death to personnel.**

- **If personnel become dizzy while using Dry Cleaning Solvent, immediately get fresh air and medical help. If Dry Cleaning Solvent contacts skin or clothes, flush with cold water. If Dry Cleaning Solvent contacts eyes, immediately flush eyes with water and get medical attention. Failure to comply may result in serious injury or death to personnel.**

11. Lubricate front lifting beams monthly. Remove two retaining pins from front lifting beam. Pull front lifting beam out as far as it will go. Clean with dry cleaning solvent. Lubricate top, bottom, and sides of lifting beam with GAA. Push front lifting beam back in to housing. Install two retaining pins in front lifting beam.

F-9. LUBRICATION NOTES (CONT)

12. Lubricate spreader bars monthly. Remove hitch pin and retaining pin from spreader bar. Pull spreader bar out as far as it will go. Clean with dry cleaning solvent. Lubricate top, bottom, and sides of spreader bar with GAA. Push spreader bar back in to housing. Install retaining pin and hitch pin in spreader bar.

13. Lubricate cab lift cylinder monthly with GAA.

SUBJECT INDEX

A

Subject — Para

Accelerator Pedal Sticks 3-3
Air
  Cab Leveling Air Springs Do Not Operate Properly 3-3
  Dryer Does Not Operate (All Models Except M1090/M1094) 3-3
  Air Dryer Does Not Operate M1090/M1094 3-3
  Dryer Purges Continually 3-3
  Front Brake Air Indicator Does Not Operate 3-3
  FRONT BRAKE AIR Pressure Gage Does Not Operate or is Inaccurate 3-3
  Large Quantity of Moisture Expelled From Air Reservoirs 3-3
  M1088 Tractor Preparation for Air or Ship Transport 2-80
  M1093 Air Drop Preparation 3-10
  M1093 Air Drop Recovery Operations 3-11
  M1094 Air Drop Preparation 3-12
  M1094 Air Drop Recovery Operations 3-13
  No Air Pressure or Low Air Pressure Present at Rear Gladhands 3-3
  Noisy Air Compressor Operation 3-3
  Preparation for Internal Air Transport 2-69
  Rear Brake Air Indicator Does Not Operate 3-3
  REAR BRAKE AIR Pressure Gage Does Not Operate or is Inaccurate 3-3
  Servicing Air Filter (Emergency Procedure) 3-9
  System Loses Pressure During Operation/Slow Air Pressure Buildup 3-3
  System Pressure Builds Up More Than 120 psi (827 kPa) (Compressor Fails To Unload) 3-3
Alarm
    Audible Alarm Does Not Operate (All Models Except M1083/M1090/M1093/M1094) 3-3
    Single Tone Audible Alarm Does Not Operate 3-3
    Dual Tone Audible Alarm Does Not Operate (Models M1083/M1090 M1093/M1094) 3-3
    Chemical Alarm Does Not Operate 3-3
Alignment
  Tires Continue To Wear After Front End Alignment and/or Vehicle Drives Sideways Down Road 3-3
All
  Windshield Wiper Speeds Do Not Operate 3-3
  Wrecker Functions Do Not Operate From Wrecker Control Panel 3-3
  Wrecker Functions Do Not Operate From Wrecker Control Panel and Wrecker REMOTE CONTROL 3-3
  Wrecker Functions Do Not Operate From Wrecker REMOTE CONTROL 3-3
Alternator
    12 VDC Circuits Do Not Operate (100 Amp Alternator) 3-3
    12 VDC Circuits Do Not Operate (200 Amp Alternator) 3-3

SUBJECT INDEX (CONT)

A (Cont)

Subject — Para

Amber
- Warning Light Does Not Illuminate (All Models Except M1089) 3-3
- Warning Light Kit Installation/Removal 2-74
- M1089 Amber Warning Light Does Not Illuminate 3-3

Amp
- 12 VDC Circuits Do Not Operate (100 Amp Alternator) 3-3
- 12 VDC Circuits Do Not Operate (200 Amp Alternator) 3-3

Auxiliary
- Equipment Operation 2-51
- Panel Does Not Illuminate 3-3
- Panel Switch Does Not Illuminate 3-3
- Panel, Personnel Heater, and Instrument Panel Do Not Illuminate 3-3
- M1088/M1089 Transmission Auxiliary Oil Cooler Fan Does Not Operate 3-3
- Transmission Auxiliary Oil Cooler Fan Does Not Operate (All Models Except M1088/M1089) 3-3

Axle Differential(s) Noisy 3-3

B

Back-up
- Hydraulic Pump Operation 2-51

Batteries
- Opening Battery Box/Testing Batteries 3-8

Battery Tester Does Not Operate 3-3

Beam
- One Or Both Headlights (High and Low Beam) Do Not Illuminate 3-3

Beams
- High Beams on Indicator Does Not Illuminate 3-3
- One Or Both Headlight High Beams Do Not Illuminate 3-3
- One Or Both Headlight Low Beams Do Not Illuminate 3-3

Blackout
- Drive Light Does Not Illuminate 3-3
- M1088/M1089 Worklights Do Not Illuminate in Blackout Mode With Blackout Override Switch On 3-3
- Marker Lights Do Not Illuminate 3-3
- One or Both Blackout Stoplights Do Not Illuminate 3-3
- One Or Both Front Blackout Marker Lights Do Not Illuminate 3-3
- One Or Both Rear Blackout Marker Lights Do Not Illuminate 3-3
- Stoplights and Blackout Stoplights Do Not Operate 3-3
- Trailer Blackout Marker Lights Do Not Illuminate 3-3
- Trailer Blackout Stoplights Do Not Illuminate 3-3

B (Cont)

Subject — Para

Blue Exhaust Smoke from Engine 3-3
Body
  Dump Body Controls 2-10
  Dump Body Does Not Lower 3-3
  Dump Body Does Not Raise 3-3
  Dump Body Does Not Raise or Lower 3-3
Boom
  M1084/M1086 Material Handling Crane (MHC) Boom Does Not Lift Up or Down or Hold Under Load 3-3
  M1084/M1086 Material Handling Crane (MHC) Boom Does Not Telescope In or Out 3-3
  M1084/M1086 Material Handling Crane (MHC) Boom Down Does Not Operate From REMOTE CONTROL UNIT 3-3
  M1084/M1086 Material Handling Crane (MHC) Boom Down Lockout Does Not Activate 3-3
  M1084/M1086 Material Handling Crane (MHC) Boom Up Does Not Operate From REMOTE CONTROL UNIT 3-3
  M1084/M1086 Material Handling Crane (MHC) Boom Up Lockout Does Not Activate 3-3
  M1084/M1086 Material Handling Crane (MHC) Swing, Telescope, Boom, and Hoist Do Not Operate 3-3
  M1089 Material Handling Crane (MHC) Boom Does Not Lift Up or Down 3-3
  M1089 Material Handling Crane (MHC) Boom Down Does Not Operate From REMOTE CONTROL UNIT 3-3
  M1089 Material Handling Crane (MHC) Boom Down Lockout Does Not Activate 3-3
  M1089 Material Handling Crane (MHC) Boom Swing Drive Assembly Does Not Operate 3-3
  M1089 Material Handling Crane (MHC) Boom Up Does Not Operate From REMOTE CONTROL UNIT 3-3
  M1089 Material Handling Crane (MHC) Boom Up Lockout Does Not Activate 3-3
Brake
  Front Brake Air Indicator Does Not Operate 3-3
  FRONT BRAKE AIR Pressure Gage Does Not Operate or is Inaccurate 3-3
  Parking Brake Indicator and/or Emergency Brake Indicator Does Not Illuminate 3-3
  Parking Brake(s) Will Not Release 3-3
  Rear Brake Air Indicator Does Not Operate 3-3
  REAR BRAKE AIR Pressure Gage Does Not Operate or is Inaccurate 3-3
Brakes
  Front Brakes Do Not Apply 3-3
  Front Brakes Overheat 3-3

SUBJECT INDEX (CONT)

B (Cont)

Subject — Para

Brakes (Cont)
- Parking Brakes Do Not Apply 3-3
- Rear Brakes Overheat 3-3
- Stoplights Do Not Illuminate When M1088 Trailer Brakes Are Applied 3-3
- Vehicle Brakes Unevenly, Brakes Pull To One Side or Grab 3-3

Braking
- Excessive Braking Distance 3-3

C

Cab
- Does Not Raise or Lower Properly 3-3
- Exhaust Fumes in Cab 3-3
- Leveling Air Springs Do Not Operate Properly 3-3
- One or More Cab Top Marker Lights Do Not Illuminate 3-3
- Tilt, Spare Tire Retainer, and Suspension Compression Do Not Operate 3-3

Cable
- Wrecker Left or Right 30K Winch Cable Drum Tensioner Does Not Operate 3-3

Chains
- Tire Chains Installation/Removal 2-76

Changing Tire 3-5

Chemical
- Alarm Does Not Operate 3-3
- Detector Does Not Operate 3-3
- Detector Indicator Does Not Illuminate 3-3

Circuits
- Engine Does Not Crank 3-3
- Engine Does Not Crank/24 VDC Circuits Do Not Operate 3-3

Cleaning Vehicle 3-7

Clearance
- Intervehicle Clearance Lights Do Not Illuminate 3-3

Cold
- Vehicle Operation in Cold Environment 32°F to -25°F (0°C to -32°C) 2-78

Composite
- One or Both Composite Taillights Do Not Illuminate 3-3

Compressor
- Air System Pressure Builds Up More Than 120 psi (827 kPa) (Compressor Fails To Unload) 3-3
- Noisy Air Compressor Operation 3-3

C (Cont)

Subject Para

Condensation
Excessive Condensation in Fuel 3-3
Connection
Towbar Connection/Disconnection 2-61
Control
All Wrecker Functions Do Not Operate From Wrecker Control Panel 3-3
All Wrecker Functions Do Not Operate From Wrecker Control Panel and Wrecker Remote Control 3-3
All Wrecker Functions Do Not Operate From Wrecker REMOTE CONTROL 3-3
M1084/M1086 Material Handling Crane (MHC) Does Not Operate From REMOTE CONTROL UNIT 3-3
30K Winch Left or Right Freespool Function Does Not Operate From Wrecker Control Panel 3-3
30K Winch Left or Right Speed Function Does Not Operate From Wrecker Control Panel 3-3
One Wrecker Function Does Not Operate From Wrecker REMOTE CONTROL 3-3
Personnel Heater Control Illumination Does Not Operate 3-3
Coolant
In Engine Oil 3-3
Loss of Coolant 3-3
Cooler
M1088/M1089 Transmission Auxiliary Oil Cooler Fan Does Not Operate 3-3
Transmission Auxiliary Oil Cooler Fan Does Not Operate (All Models Except M1088/M1089) 3-3
Cooling
Oil In Cooling System 3-3
Coupling
Fifth Wheel Does Not Lock When Coupling Trailer to Tractor 3-3
Cover
Power Distribution Panel (PDP) Cover Removal/Installation 3-17
Crane
M1084/M1086 Material Handling Crane (MHC) Boom Does Not Lift Up or Down or Hold Under Load 3-3
M1084/M1086 Material Handling Crane (MHC) Boom Does Not Telescope In or Out 3-3
M1084/M1086 Material Handling Crane (MHC) Boom Down Does Not Operate From REMOTE CONTROL UNIT 3-3
M1084/M1086 Material Handling Crane (MHC) Boom Down Lockout Does Not Activate 3-3
M1084/M1086 Material Handling Crane (MHC) Boom Up Does Not Operate From REMOTE CONTROL UNIT 3-3
M1084/M1086 Material Handling Crane (MHC) Boom Up Lockout Does Not Activate 3-3

SUBJECT INDEX (CONT)

C (Cont)

Subject Para

Crane (Cont)
M1084/M1086 Material Handling Crane (MHC) Does Not Operate 3-3
M1084/M1086 Material Handling Crane (MHC) Does Not Operate From REMOTE CONTROL UNIT 3-3
M1084/M1086 Material Handling Crane (MHC) Hand Pump Does Not Operate 3-3
M1084/M1086 Material Handling Crane (MHC) Hoist Does Not Operate 3-3
M1084/M1086 Material Handling Crane (MHC) Hoist Down Does Not Operate From REMOTE CONTROL UNIT 3-3
M1084/M1086 Material Handling Crane (MHC) Hoist Up Does Not Operate From REMOTE CONTROL UNIT 3-3
M1084/M1086 Material Handling Crane (MHC) Hoist Up Lockout Does Not Activate 3-3
M1084/M1086 Material Handling Crane (MHC) Hydraulic Functions Operate Slowly 3-3
M1084/M1086 Material Handling Crane (MHC) Left Outrigger (Jack) Drifts or Does Not Operate 3-3
M1084/M1086 Material Handling Crane (MHC) Mast Does Not Erect 3-3
M1084/M1086 Material Handling Crane (MHC) Overload Shutdown System Does Not Activate 3-3
M1084/M1086 Material Handling Crane (MHC) Overload Shutdown System Stays Activated 3-3
M1084/M1086 Material Handling Crane (MHC) Right Outrigger (Jack) Drifts or Does Not Operate 3-3
M1084/M1086 Material Handling Crane (MHC) Swing CCW Does Not Operate From REMOTE CONTROL UNIT 3-3
M1084/M1086 Material Handling Crane (MHC) Swing CW Does Not Operate From REMOTE CONTROL UNIT 3-3
M1084/M1086 Material Handling Crane (MHC) Swing Drive Does Not Operate 3-3
M1084/M1086 Material Handling Crane (MHC) Swing, Telescope, Boom, and Hoist Do Not Operate 3-3
M1084/M1086 Material Handling Crane (MHC) Telescope In Does Not Operate From REMOTE CONTROL UNIT 3-3
M1084/M1086 Material Handling Crane (MHC) Telescope Out Does Not Operate From REMOTE CONTROL UNIT 3-3
M1084/M1086 Material Handling Crane (MHC) Telescope Out Lockout Does Not Activate 3-3
M1089 Material Handling Crane (MHC) Boom Does Not Lift Up or Down 3-3
M1089 Material Handling Crane (MHC) Boom Does Not Telescope In or Out 3-3

C (Cont)

Subject Para

Crane (Cont)
M1089 Material Handling Crane (MHC) Boom Down Does Not Operate From REMOTE CONTROL UNIT 3-3
M1089 Material Handling Crane (MHC) Boom Down Lockout Does Not Activate 3-3
M1089 Material Handling Crane (MHC) Boom Swing Drive Assembly Does Not Operate 3-3
M1089 Material Handling Crane (MHC) Boom Up Does Not Operate From REMOTE CONTROL UNIT 3-3
M1089 Material Handling Crane (MHC) Boom Up Lockout Does Not Activate 3-3
M1089 Material Handling Crane (MHC) Does Not Operate 3-3
M1089 Material Handling Crane (MHC) Does Not Operate From REMOTE CONTROL UNIT 3-3
M1089 Material Handling Crane (MHC) Hand Pump Does Not Operate 3-3
M1089 Material Handling Crane (MHC) Hoist Does Not Operate 3-3
M1089 Material Handling Crane (MHC) Hoist Down Does Not Operate From REMOTE CONTROL UNIT 3-3
M1089 Material Handling Crane (MHC) Hoist Up Does Not Operate From REMOTE CONTROL UNIT 3-3
M1089 Material Handling Crane (MHC) Hoist Up Lockout Does Not Activate 3-3
M1089 Material Handling Crane (MHC) Left or Right Outrigger (Jack) Drifts or Does Not Operate 3-3
M1089 Material Handling Crane (MHC) Mast Does Not Erect or Stow 3-3
M1089 Material Handling Crane (MHC) Outrigger Extension Cylinder Does Not Operate 3-3
M1089 Material Handling Crane (MHC) Overload Shutdown System Does Not Activate 3-3
M1089 Material Handling Crane (MHC) Overload Shutdown System Stays Activated 3-3
M1089 Material Handling Crane (MHC) Swing CCW Does Not Operate From REMOTE CONTROL UNIT 3-3
M1089 Material Handling Crane (MHC) Swing CW Does Not Operate From REMOTE CONTROL UNIT 3-3
M1089 Material Handling Crane (MHC) Telescope In Does Not Operate From REMOTE CONTROL UNIT 3-3
M1089 Material Handling Crane (MHC) Telescope Out Does Not Operate From REMOTE CONTROL UNIT 3-3
M1089 Material Handling Crane (MHC) Telescope Out Lockout Does Not Activate 3-3

SUBJECT INDEX (CONT)

C (Cont)

Subject Para

CTIS
Does Not Deflate Tires 3-3
Does Not Inflate Tires 3-3
Does Not Operate 3-3
ECU Lights Work But Central Tire Inflation System (CTIS) Fails To Inflate or Deflate 3-3
Five Central Tire Inflation System (CTIS) ECU Indicator Lights Flashing 3-3
Four Central Tire Inflation System (CTIS) ECU Indicator Lights Flashing 3-3
Overspeed Indicator Does Not Illuminate 3-3
Repeatedly Resumes Cycling 30 Seconds After Indicator Lights Stop Flashing 3-3
Two Steady Mode Lights Illuminate On Central Tire Inflation System (CTIS) ECU 3-3
Cylinder
M1089 Fold Cylinder Does Not Operate 3-3
M1089 Material Handling Crane (MHC) Outrigger Extension Cylinder Does Not Operate 3-3
M1089 Underlift Telescopic Lift Cylinder(s) Does Not Operate 3-3
Cylinders
M1089 Stinger/Telescopic Lift Cylinders/Fold Cylinder/Right 30K Winch Do Not Operate 3-3

D

Data and Instruction Plates 2-53
Deep
Engine Fan Does Not Turn Off Using Radiator Fan Off Switch 3-3
Desert
Operation in Desert Environment 2-58
Detector
Chemical Detector Does Not Operate 3-3
Chemical Detector Indicator Does Not Operate 3-3
Differential
Axle Differential(s) Noisy 3-3
Lock Solenoid Does Not Operate 3-3
Disabled
Towing Disabled Vehicle 2-62
Disconnection
Towbar Connection/Disconnection 2-61
Disconnecting
Fifth Wheel Does Not Unlock When Disconnecting Trailer From Tractor 3-3

D (Cont)

Subject — Para

Door
- LH Door and/or LH Front Marker Lights Do Not Illuminate 3-3
- RH Door and/or RH Front Marker Lights Do Not Illuminate 3-3

Drive
- Blackout Drive Light Does Not Illuminate 3-3
- M1084/M1086 Material Handling Crane (MHC) Swing Drive Does Not Operate 3-3
- M1089 Material Handling Crane (MHC) Boom Swing Drive Assembly Does Not Operate 3-3

Drum
- Wrecker Left or Right 30K Winch Cable Drum Tensioner Does Not Operate 3-3

Dryer
- M1090/M1094 Air Dryer Does Not Operate 3-3

Dump
- Body Does Not Lower 3-3
- Body Does Not Raise 3-3
- Body Does Not Raise or Lower 3-3
- Up Indicator Does Not Operate 3-3

Dust
- Operation in Extreme Dust 2-55

E

ECU
- Central Tire Inflation System (CTIS) ECU Lights Illuminate But CTIS Fails To Inflate or Deflate 3-3
- Five Central Tire Inflation System (CTIS) ECU Indicator Lights Flashing 3-3
- Four Central Tire Inflation System (CTIS) ECU Indicator Lights Flashing 3-3
- Illumination Does Not Dim 3-3
- Two Steady Mode Lights Illuminate On Central Tire Inflation System (CTIS) ECU 3-3

Electrical
- System Does Not Maintain a Charge 3-3

Emergency
- Highway Emergency Marker Kit Setup 2-60
- Parking Brake Indicator and/or Emergency Brake Indicator Does Not Illuminate 3-3
- Procedures 2-67
- Servicing Air Filter (Emergency Procedure) 3-9

SUBJECT INDEX (CONT)

E (Cont)

Subject — Para

Engine
- Coolant in Engine Oil . . . 3-3
- Cranks But Does Not Start . . . 3-3
- Cranks But Does Not Start or Engine Stalls After Starting . . . 3-3
- Does Not Crank . . . 3-3
- Does Not Crank/24 VDC Circuits Do Not Operate . . . 3-3
- Excessive Engine Oil Consumption . . . 3-3
- Exhaust System Unusually Noisy or Vibrates Excessively During Engine Operation . . . 3-3
- Fan Does Not Turn Off Using Radiator Fan Off Switch . . . 3-3
- Fan Runs Constantly . . . 3-3
- High Engine Temperature Indicator Does Not Operate . . . 3-3
- Low Engine Oil Pressure . . . 3-3
- Oil Pressure Gage Does Not Operate or is Inaccurate . . . 3-3
- Oil Pressure Indicator Does Not Illuminate . . . 3-3
- Overheats . . . 3-3
- Overspeeds On Start . . . 3-3
- Rapid Engine Warm-Up . . . 2-70
- Speed is Not Stable . . . 3-3
- Stalls at Low RPM . . . 3-3
- Starts But Misfires, Runs Rough, or Lacks Power . . . 3-3
- Too Much Vibration In Engine . . . 3-3

Environment
- Operation in Desert Environment . . . 2-57
- Vehicle Operation in Cold Environment, 32°F to -25°F (0°C to -32°C) . . . 2-78

Equipment
- Auxiliary Equipment Operation . . . 2-51

Ether
- Start Does Not Operate . . . 3-3
- Starting Aid Does Not Operate . . . 3-3

Excessive
- Black or Gray Exhaust Smoke . . . 3-3
- Braking Distance . . . 3-3
- Condensation in Fuel . . . 3-3
- Engine Oil Consumption . . . 3-3
- Movement of Trailer King Pin in Fifth Wheel . . . 3-3
- Play When Turning Steering Wheel . . . 3-3

Exhaust
- Blue Exhaust Smoke . . . 3-3
- Excessive Black or Gray Exhaust Smoke . . . 3-3

E (Cont)

Subject — Para

Exhaust (Cont)
- Fumes in Cab 3-3
- System Unusually Noisy or Vibrates Excessively During Engine Operation 3-3
- White Exhaust Smoke 3-3

External
- M1089 External Hydraulic Power Operation 2-73
- No Service or External Hydraulic Power From M1089 3-3

Extreme
- Operation in Extreme Dust 2-55
- Operation in Extreme Heat 2-54

F

Fan
- Engine Fan Does Not Turn Off Using Radiator Fan Off Switch 3-3
- Engine Fan Runs Constantly 3-3
- M1088/M1089 Transmission Auxiliary Oil Cooler Fan Does Not Operate 3-3
- Off Indicator Does Not Illuminate 3-3
- Personnel Heater Fan Does Not Operate 3-3
- Transmission Auxiliary Oil Cooler Fan Does Not Operate (All Models Except M1088/M1089) 3-3

Fifth
- Excessive Movement of Trailer King Pin in Fifth Wheel 3-3
- Wheel Does Not Lock When Coupling Trailer to Tractor 3-3
- Wheel Does Not Unlock When Disconnecting Trailer From Tractor 3-3
- Wheel Sliding Mechanism Does Not Operate 3-3

Filter
- Servicing Air Filter (Emergency Procedure) 3-9

Fire Extinguisher Operation 2-59

Five Central Tire Inflation System (CTIS) ECU Indicator Lights Flashing 3-3

Flat
- Wrecker Flat Towing 2-43

Fold
- M1089 Fold Cylinder Does Not Operate 3-3
- M1089 Stinger/Telescopic Lift Cylinders/Fold Cylinder/Right 30K Winch Do Not Operate 3-3

Forest
- Operation in Forest or on Rocky Terrain 2-56

Four Central Tire Inflation System (CTIS) ECU Indicator Lights Flashing 3-3

Freespool
- 30K Winch Left or Right Freespool Function Does Not Operate From Wrecker Control Panel 3-3
- Wrecker Left or Right 30K Winch Freespool Does Not Operate 3-3

SUBJECT INDEX (CONT)

F (Cont)

Subject — Para

Front
- And Rear Hazard Lights Do Not Illuminate . . . 3-3
- And Rear Turn Signals Do Not Illuminate . . . 3-3
- Brake Air Indicator Does Not Illuminate . . . 3-3
- BRAKE AIR Pressure Gage Does Not Operate or is Inaccurate . . . 3-3
- Brakes Do Not Apply . . . 3-3
- Front Brakes Overheat . . . 3-3
- Left or Right Front Turn Signal Does Not Illuminate . . . 3-3
- LH Door and/or LH Front Marker Lights Do Not Illuminate . . . 3-3
- One or Both Front Blackout Marker Lights Do Not Illuminate . . . 3-3
- RH Door and/or RH Front Marker Lights Do Not Illuminate . . . 3-3
- Tires Continue To Wear After Front End Alignment and/or Vehicle Drives Sideways Down Road . . . 3-3

Fuel
- Consumption too High . . . 3-3
- Excessive Condensation in Fuel . . . 3-3
- Gage Does Not Operate or is Inaccurate . . . 3-3

Fumes
- Exhaust Fumes in Cab . . . 3-3

Function
- 30K Winch Left or Right Freespool Function Does Not Operate From Wrecker Control Panel . . . 3-3
- 30K Winch Left or Right Speed Function Does Not Operate From Wrecker Control Panel . . . 3-3
- One Wrecker Function Does Not Operate From Wrecker REMOTE CONTROL . . 3-3

Functions
- All Wrecker Functions Do Not Operate From Wrecker Control Panel . . . 3-3
- All Wrecker Functions Do Not Operate From Wrecker Control Panel and Wrecker REMOTE CONTROL . . . 3-3
- All Wrecker Functions Do Not Operate From Wrecker REMOTE CONTROL . . . 3-3
- M1084/M1086 Material Handling Crane (MHC) Hydraulic Functions Operate Slowly . . . 3-3

G

Gage
- Engine Oil Pressure Gage Does Not Operate or is Inaccurate . . . 3-3
- FRONT BRAKE AIR Pressure Gage Does Not Operate or is Inaccurate . . . 3-3
- FUEL Gage Does Not Operate or is Inaccurate . . . 3-3
- Instrument Panel Gage Does Not Illuminate . . . 3-3
- REAR BRAKE AIR Pressure Gage Does Not Operate or is Inaccurate . . . 3-3

G (Cont)

Subject Para

Gage (Cont)
VOLTS Gage Does Not Operate or is Inaccurate 3-3
WATER TEMP Gage Does Not Operate or is Inaccurate 3-3
Gladhand
M1088 Rear Gladhand(s) Leaks or Does Not Operate 3-3
Gladhands
No Air Pressure or Low Air Pressure Present at Rear Gladhands 3-3
Gun
Preparation for Machine Gun Operation 2-71

H

Hand
M1084/M1086 Material Handling Crane (MHC) Hand Pump
Does Not Operate 3-3
M1089 Material Handling Crane (MHC) Hand Pump Does Not Operate 3-3
Hard to Steer 3-3
Hazard
Rear Hazard Lights Do Not Illuminate 3-3
Hazards
Front and Rear Hazard Lights Do Not Illuminate 3-3
Headlight
One Or Both Headlight High Beams Do Not Illuminate 3-3
One Or Both Headlight Low Beams Do Not Illuminate 3-3
Headlights
One Or Both Headlights (High and Low Beam) Do Not Illuminate 3-3
Heat
Operation in Extreme Heat 2-54
Heater
Auxiliary Panel, Personnel Heater, and Instrument Panel
Do Not Illuminate 3-3
Personnel Heater Control Illumination Does Not Operate 3-3
Personnel Heater Fan Does Not Operate 3-3
High
Beams on Indicator Does Not Illuminate 3-3
Engine Temperature Indicator Does Not Illuminate 3-3
One Or Both Headlight High Beams Do Not Illuminate 3-3
Highway Emergency Marker Kit Setup 2-60
Hill
Starting on Hill Operation 2-75

SUBJECT INDEX (CONT)

H (Cont)

Subject Para

Hoist
M1084/M1086 Material Handling Crane (MHC) Hoist Does Not Operate 3-3
M1084/M1086 Material Handling Crane (MHC) Hoist Down Does Not Operate From REMOTE CONTROL UNIT 3-3
M1084/M1086 Material Handling Crane (MHC) Hoist Up Does Not Operate From REMOTE CONTROL UNIT 3-3
M1084/M1086 Material Handling Crane (MHC) Hoist Up Lockout Does Not Activate 3-3
M1084/M1086 Material Handling Crane (MHC) Swing, Telescope, Boom, and Hoist Do Not Operate 3-3
M1089 Material Handling Crane (MHC) Hoist Does Not Operate 3-3
M1089 Material Handling Crane (MHC) Hoist Down Does Not Operate From REMOTE CONTROL UNIT 3-3
M1089 Material Handling Crane (MHC) Hoist Up Does Not Operate From REMOTE CONTROL UNIT 3-3
M1089 Material Handling Crane (MHC) Hoist Up Lockout Does Not Activate 3-3
Horn Does Not Operate 3-3
Hydraulic
Back-Up Hydraulic Pump Operation 2-52
Loss of Hydraulic Pressure (Single Stage Pump) 3-3
Loss of Hydraulic Pressure (Three Stage Pump) 3-3
M1084/M1086 Material Handling Crane (MHC) Hydraulic Functions Operate Slowly 3-3
M1089 External Hydraulic Power Operation 2-73
M1089 Pay-Out Hydraulic Motor Assembly Does Not Operate 3-3
No Service or External Hydraulic Power From M1089 3-3
System Operation (M1089 to M1089) 2-72

I

Illuminate
Auxiliary Panel Does Not Illuminate 3-3
Auxiliary Panel Switch Does Not Illuminate 3-3
Auxiliary Panel, Personnel Heater, and Instrument Panel Do Not Illuminate 3-3
Backup Light Does Not Illuminate 3-3
Blackout Drive Light Does Not Illuminate 3-3
Blackout Marker Lights Do Not Illuminate 3-3
Central Tire Inflation System (CTIS) Overspeed Indicator Does Not Illuminate . . . 3-3

I (Cont)

Subject Para

Illuminate (Cont)
DUMP BODY UP Indicator Does Not Illuminate 3-3
Engine Oil Pressure Indicator Does Not Illuminate 3-3
Fan Oft Indicator Does Not Illuminate 3-3
Front and Rear Hazard Lights Do Not Illuminate 3-3
Front and Rear Turn Signals Do Not Illuminate 3-3
Front Brake Indicator Does Not Illuminate 3-3
High Beam On Indicator Does Not Illuminate 3-3
High Engine Temperature Indicator Does Not Illuminate 3-3
Instrument Panel Gage Does Not Illuminate 3-3
Instrument Panel Switch Does Not Illuminate 3-3
Intervehicle Left Turn Signal Does Not Illuminate 3-3
Intervehicle Right turn Signal Does Not Illuminate 3-3
Intervehicle Stoplights Do Not Illuminate 3-3
Intervehicle Taillights Do Not Illuminate 3-3
Lamp Test Switch Does Not Illuminate 3-3
Left or Right Front Turn Signal Does Not Illuminate 3-3
Left Turn Signal Indicator Does Not Illuminate 3-3
LH Door and/or LH Front Marker Lights Do Not Illuminate 3-3
M1084/M1086 Worklights Do Not Illuminate 3-3
M1088/M1089 (LH) Worklight Does Not Illuminate 3-3
M1088/M1089 (RH) Worklight Does Not Illuminate 3-3
M1088/M1089 Worklights Do Not Illuminate 3-3
M1088/M1089 Worklights Do Not Illuminate in Blackout Mode With
Blackout Override Switch On 3-3
M1089 Amber Warning Light Does Not Illuminate 3-3
One or Both Blackout Stoplights Do Not Illuminate 3-3
One or Both Composite Taillights Do Not Illuminate 3-3
One or Both Front Blackout Marker Lights Do Not Illuminate 3-3
One Or Both Headlight High Beams Do Not Illuminate 3-3
One Or Both Headlight Low Beams Do Not Illuminate 3-3
One Or Both Headlights (High and Low Beam) Do Not Illuminate 3-3
One Or Both Rear Blackout Marker Lights Do Not Illuminate 3-3
One or More Cab Top Marker Lights Do Not Illuminate 3-3
Parking Brake Indicator and/or Emergency Brake Indicator Does Not Illuminate . . 3-3
Parking Lights Do Not Illuminate 3-3
Power Take-Off (PTO) Indicator Does Not Illuminate 3-3
Rear Hazard Lights Do Not Illuminate 3-3
RH Door and/or RH Front Marker Lights Do Not Illuminate 3-3
Right Turn Signal Indicator Does Not Illuminate 3-3
Side and/or Rear Marker Lights Do Not Illuminate 3-3
Stoplights and Blackout Stoplights Do Not Illuminate 3-3
Tachometer Does Not Illuminate 3-3
Trailer Blackout Marker Lights Do Not Illuminate 3-3

SUBJECT INDEX (CONT)

I (Cont)

Subject — Para

Illuminate (Cont)
- Trailer Blackout Stoplights Do Not Illuminate . . . 3-3
- Trailer Left Stop/Turn Light Does Not Illuminate . . . 3-3
- Trailer Marker/Taillights Do Not Illuminate . . . 3-3
- Trailer Right Stop/Turn Light Does Not Illuminate . . . 3-3
- Transmission Temperature Indicator Does Not Illuminate . . . 3-3
- Two Steady Mode Lights Illuminate On Central Tire Inflation System (CTIS) ECU . . . 3-3
- Turn Signal Indicators and High Beams on Indicator Do Not Illuminate . . . 3-3
- Amber Warning Light Does Not Illuminate (All Models Except M1089) . . . 3-3

Illumination
- WTEC II Transmission Pushbutton Shift Selector (TEPSS) Illumination Does Not Dim . . . 3-3
- Personnel Heater Control Illumination Does Not Operate . . . 3-3

Indicator
- Chemical Detector Indicator Does Not Operate . . . 3-3
- Central Tire Inflation System (CTIS) Overspeed Indicator Does Not Illuminate . . . 3-3
- DUMP BODY UP Indicator Does Not Illuminate . . . 3-3
- Engine Oil Pressure Indicator Does Not Illuminate . . . 3-3
- Fan Off Indicator Does Not Illuminate . . . 3-3
- Five Central Tire Inflation System (CTIS) ECU Indicator Lights Flashing . . . 3-3
- Four Central Tire Inflation System (CTIS) ECU Indicator Lights Flashing . . . 3-3
- Front Brake Air Indicator Does Not Illuminate . . . 3-3
- High Beams on Indicator Does Not Illuminate . . . 3-3
- High Engine Temperature Indicator Does Not Illuminate . . . 3-3
- Left Turn Signal Indicator Does Not Illuminate . . . 3-3
- Master Stop Indicator Does Not Illuminate . . . 3-3
- Parking Brake Indicator and/or Emergency Brake Indicator Does Not Illuminate . . . 3-3
- Power Take-Off (PTO) Indicator Does Not Illuminate . . . 3-3
- Rear Brake Air Indicator Does Not Illuminate . . . 3-3
- Right Turn Signal Indicator Does Not Illuminate . . . 3-3
- Transmission Temperature Indicator Does Not Illuminate . . . 3-3
- Turn Signal Indicators and High Beams On Indicator Do Not Illuminate . . . 3-3

Indicators
- Central Tire Inflation System (CTIS) Repeatedly Resumes Cycling 30 Seconds After Indicator Lights Stop Flashing . . . 3-3

Inhibit
- Start Inhibit Pushbutton Switch Does Not Operate . . . 3-3

I (Cont)

Subject Para

Instrument
Auxiliary Panel Does Not Illuminate 3-3
Auxiliary Panel Switch Does Not Illuminate 3-3
Auxiliary Panel, Personnel Heater, and Instrument Panel
Do Not Illuminate 3-3
Panel Gage Does Not Illuminate 3-3
Panel Switch Does Not Illuminate 3-3
Intervehicle
Clearance Lights Do Not Illuminate 3-3
Left Turn Signal Does Not Illuminate 3-3
Right Turn Signal Does Not Illuminate 3-3
Stoplights Do Not Illuminate 3-3
Taillights Do Not Illuminate 3-3
Introduction
Maintenance Introduction 3-4
Troubleshooting Introduction 3-2

J

Joints
Propeller Shafts or Universal Joints Unusually Noisy When Operating 3-3

K

King
Excessive Movement of Trailer King Pin in Fifth Wheel 3-3
Kit
Highway Emergency Marker Kit Setup 2-59
M1083/M1084/M1093 Troopseat Kit Installation/Removal 3-14
M1085 Troopseat Kit Installation/Removal 3-15
M1090/M1094 Troopseat Kit Installation/Removal 3-16
Amber Warning Light Kit Installation/Removal 2-74

L

Lamp Test Switch Does Not Illuminate 3-3
Large Quantity of Moisture Expelled From Air Reservoirs 3-3
Leaks
M1088 Rear Gladhand(s) Leaks or Does Not Operate 3-3
Leans to One Side or Rear of Vehicle Sags 3-3
Left
M1084/M1086 Material Handling Crane (MHC) Left Outrigger (Jack)
Drifts or Does Not Operate 3-3

SUBJECT INDEX (CONT)

L (Cont)

Subject — Para

Left (Cont)
- M1089 Left 30K Winch Does Not Operate 3-3
- M1089 Left Stiffleg Drifts or Does Not Operate 3-3
- M1089 Material Handling Crane (MHC) Left or Right Outrigger (Jack) Drifts or Does Not Operate 3-3
- M1089 Stifflegs/Left 30K Winch/15K Self-Recovery Winch (SRW) Do Not Operate 3-3
- 30K Winch Left or Right Freespool Function Does Not Operate From Wrecker Control Panel 3-3
- 30K Winch Left or Right Speed Function Does Not Operate From Wrecker Control Panel 3-3
- Or Right Front Turn Signal Does Not Illuminate 3-3
- Trailer Left Stop/Turn Light Does Not Illuminate 3-3
- Turn Signal Indicator Does Not Illuminate 3-3
- Wrecker Left or Right 30K Winch Cable Drum Tensioner Does Not Operate 3-3
- Wrecker Left or Right 30K Winch Freespool Does Not Operate 3-3

LH
- Door and/or LH Front Marker Lights Do Not Illuminate 3-3
- M1088/M1089 (LH) Worklight Does Not Illuminate 3-3

Lift
- M1089 Stinger/Telescopic Lift Cylinders/Fold Cylinder/Right 30K Winch Do Not Operate 3-3

Light
- Backup Light Does Not Illuminate 3-3
- Blackout Drive Light Does Not Illuminate 3-3
- M1089 Amber Warning Light Does Not Illuminate 3-3
- Material Handling Crane (LMHC) Does Not Operate 3-3
- Material Handling Crane (LMHC) Operation 2-29
- No Overspeed Warning Light and/or Overspeed Pressure Change 3-3
- Trailer Left Stop/Turn Light Does Not Illuminate 3-3
- Trailer Right Stop/Turn Light Does Not Illuminate 3-3
- Amber Warning Light Kit Installation/Removal 2-74

Lights
- Blackout Marker Lights Do Not Illuminate 3-3
- Central Tire Inflation System (CTIS) ECU Lights Work But CTIS Fails To Inflate or Deflate 3-3
- Central Tire Inflation System (CTIS) Repeatedly Resumes Cycling 30 Seconds After Indicator Lights Stop Flashing 3-3
- Five Central Tire Inflation System (CTIS) ECU Indicator Lights Flashing 3-3

L (Cont)

Subject — Para

Lights (Cont)
- Four Central Tire Inflation System (CTIS) ECU Indicator Lights Flashing . . . 3-3
- Front and Rear Hazard Lights Do Not Illuminate . . . 3-3
- Intervehicle Clearance Lights Do Not Illuminate . . . 3-3
- LH Door and/or LH Front Marker Lights Do Not Illuminate . . . 3-3
- One or Both Front Blackout Marker Lights Do Not Illuminate . . . 3-3
- One or Both Rear Blackout Marker Lights Do Not Illuminate . . . 3-3
- One or More Cab Top Marker Lights Do Not Illuminate . . . 3-3
- Parking Lights Do Not Illuminate . . . 3-3
- Rear Hazard Lights Do Not Operate . . . 3-3
- RH Door and/or RH Front Marker Lights Do Not Illuminate . . . 3-3
- Side and/or Rear Marker Lights Do Not Illuminate . . . 3-3
- Trailer Blackout Marker Lights Do Not Illuminate . . . 3-3
- Two Steady Mode Lights Illuminate On Central Tire Inflation System (CTIS) ECU . . . 3-3

Lockout
- M1084/M1086 Material Handling Crane (MHC) Boom Down Lockout Does Not Activate . . . 3-3
- M1084/M1086 Material Handling Crane (MHC) Boom Up Lockout Does Not Activate . . . 3-3
- M1084/M1086 Material Handling Crane (MHC) Hoist Up Lockout Does Not Activate . . . 3-3
- M1084/M1086 Material Handling Crane (MHC) Telescope Out Lockout Does Not Activate . . . 3-3
- M1089 Material Handling Crane (MHC) Boom Down Lockout Does Not Activate . . . 3-3
- M1089 Material Handling Crane (MHC) Boom Up Lockout Does Not Activate . . . 3-3
- M1089 Material Handling Crane (MHC) Hoist Up Lockout Does Not Activate . . . 3-3
- M1089 Material Handling Crane (MHC) Telescope Out Lockout Does Not Activate . . . 3-3

Loss
- Of Coolant . . . 3-3
- Of Hydraulic Pressure (Single Stage Pump) . . . 3-3
- Of Hydraulic Pressure (Three Stage Pump) . . . 3-3

Low
- No Air Pressure or Low Air Pressure Present at Rear Gladhands . . . 3-3
- Engine Oil Pressure . . . 3-3

Lower
- Cab Does Not Raise or Lower Properly . . . 3-3
- Dump Body Does Not Lower . . . 3-3
- Dump Body Does Not Raise or Lower . . . 3-3
- Spare Tire Does Not Raise or Lower Properly . . . 3-3

SUBJECT INDEX (CONT)

L (Cont)

Subject Para

Lubrication
Coolant in Engine Oil 3-3
Lubrication 3-1

M

M1083
/M1084/M1093 Troopseat Kit Installation/Removal 3-14
M1084
M1083/M1084/M1093 Troopseat Kit Installation/Removal 3-14
/M1086 Material Handling Crane (MHC) Boom Does Not Lift Up or Down or Hold Under Load 3-3
/M1086 Material Handling Crane (MHC) Boom Does Not Telescope In or Out 3-3
/M1086 Material Handling Crane (MHC) Boom Down Does Not Operate From REMOTE CONTROL UNIT 3-3
/M1086 Material Handling Crane (MHC) Boom Down Lockout Does Not Activate 3-3
/M1086 Material Handling Crane (MHC) Boom Up Does Not Operate From REMOTE CONTROL UNIT 3-3
/M1086 Material Handling Crane (MHC) Boom Up Lockout Does Not Activate 3-3
/M1086 Material Handling Crane (MHC) Does Not Operate 3-3
/M1086 Material Handling Crane (MHC) Does Not Operate From REMOTE CONTROL UNIT 3-3
/M1086 Material Handling Crane (MHC) Hand Pump Does Not Operate 3-3
/M1086 Material Handling Crane (MHC) Hoist Does Not Operate 3-3
/M1086 Material Handling Crane (MHC) Hoist Down Does Not Operate From REMOTE CONTROL UNIT 3-3
/M1086 Material Handling Crane (MHC) Hoist Up Does Not Operate From REMOTE CONTROL UNIT 3-3
/M1086 Material Handling Crane (MHC) Hoist Up Lockout Does Not Activate 3-3
/M1086 Material Handling Crane (MHC) Hydraulic Functions Operate Slowly 3-3
/M1086 Material Handling Crane (MHC) Left Outrigger (Jack) Drifts or Does Not Operate 3-3
/M1086 Material Handling Crane (MHC) Mast Does Not Erect 3-3

M (Cont)

Subject — Para

M1084 (Cont)
/M1086 Material Handling Crane (MHC) Overload Shutdown System Stays Activated . . . 3-3
/M1086 Material Handling Crane (MHC) Overload Shutdown System Does Not Activate . . . 3-3
/M1086 Material Handling Crane (MHC) Right Outrigger (Jack) Drifts or Does Not Operate . . . 3-3
/M1086 Material Handling Crane (MHC) Swing CCW Does Not Operate From REMOTE CONTROL UNIT . . . 3-3
/M1086 Material Handling Crane (MHC) Swing CW Does Not Operate From REMOTE CONTROL UNIT . . . 3-3
/M1086 Material Handling Crane (MHC) Swing Drive Does Not Operate . . . 3-3
/M1086 Material Handling Crane (MHC) Swing, Telescope, Boom, and Hoist Do Not Operate . . . 3-3
/M1086 Material Handling Crane (MHC) Telescope In Does Not Operate From REMOTE CONTROL UNIT . . . 3-3
/M1086 Material Handling Crane (MHC) Telescope Out Does Not Operate From REMOTE CONTROL UNIT . . . 3-3
/M1086 Material Handling Crane (MHC) Telescope Out Lockout Does Not Activate . . . 3-3
/M1086 Worklights Do Not Illuminate . . . 3-3
M1085
Troopseat Kit Installation/Removal . . . 3-15
M1086
M1084/M1086 Material Handling Crane (MHC) Boom Does Not Lift Up or Down or Hold Under Load . . . 3-3
M1084/M1086 Material Handling Crane (MHC) Boom Does Not Telescope In or Out . . . 3-3
M1084/M1086 Material Handling Crane (MHC) Boom Down Does Not Operate From REMOTE CONTROL UNIT . . . 3-3
M1084/M1086 Material Handling Crane (MHC) Boom Down Lockout Does Not Activate . . . 3-3
M1084/M1086 Material Handling Crane (MHC) Boom Up Does Not Operate From REMOTE CONTROL UNIT . . . 3-3
M1084/M1086 Material Handling Crane (MHC) Boom Up Lockout Does Not Activate . . . 3-3
M1084/M1086 Material Handling Crane (MHC) Does Not Operate . . . 3-3
M1084/M1086 Material Handling Crane (MHC) Does Not Operate From REMOTE CONTROL UNIT . . . 3-3
M1084/M1086 Material Handling Crane (MHC) Hand Pump Does Not Operate . . . 3-3
M1084/M1086 Material Handling Crane (MHC) Hoist Does Not Operate . . . 3-3

SUBJECT INDEX (CONT)

M (Cont)

Subject Para

M1086 (Cont)
M1084/M1086 Material Handling Crane (MHC) Hoist Down Does Not Operate From REMOTE CONTROL UNIT 3-3
M1084/M1086 Material Handling Crane (MHC) Hoist Up Does Not Operate From REMOTE CONTROL UNIT 3-3
M1084/M1086 Material Handling Crane (MHC) Hoist Up Lockout Does Not Activate 3-3
M1084/M1086 Material Handling Crane (MHC) Hydraulic Functions Operate Slowly 3-3
M1084/M1086 Material Handling Crane (MHC) Left Outrigger (Jack) Drifts or Does Not Operate 3-3
M1084/M1086 Material Handling Crane (MHC) Mast Does Not Erect 3-3
M1084/M1086 Material Handling Crane (MHC) Overload Shutdown System Stays Activated 3-3
M1084/M1086 Material Handling Crane (MHC) Overload Shutdown System Does Not Activate 3-3
M1084/M1086 Material Handling Crane (MHC) Right Outrigger (Jack) Drifts or Does Not Operate 3-3
M1084/M1086 Material Handling Crane (MHC) Swing CCW Does Not Operate From REMOTE CONTROL UNIT 3-3
M1084/M1086 Material Handling Crane (MHC) Swing CW Does Not Operate From REMOTE CONTROL UNIT 3-3
M1084/M1086 Material Handling Crane (MHC) Swing Drive Does Not Operate 3-3
M1084/M1086 Material Handling Crane (MHC) Swing, Telescope, Boom, and Hoist Do Not Operate 3-3
M1084/M1086 Material Handling Crane (MHC) Telescope In Does Not Operate From REMOTE CONTROL UNIT 3-3
M1084/M1086 Material Handling Crane (MHC) Telescope Out Does Not Operate From REMOTE CONTROL UNIT 3-3
M1084/M1086 Material Handling Crane (MHC) Telescope Out Lockout Does Not Activate 3-3
M1084/M1086 Worklights Do Not Illuminate 3-3
M1088
/M1089 (LH) Worklight Does Not Illuminate 3-3
/M1089 (RH) Worklight Does Not Illuminate 3-3
/M1089 Transmission Auxiliary Oil Cooler Fan Does Not Operate 3-3
/M1089 Worklights Do Not Illuminate 3-3
/M1089 Worklights Do Not Illuminate in Blackout Mode With Blackout Override Switch On 3-3
Rear Gladhand(s) Leaks or Does Not Operate 3-3

M (Cont)

Subject Para

M1088 (Cont)
Stoplights Do Not Illuminate When M1088 Trailer Brakes Are Applied 3-3
Tractor Preparation for Air or Ship Transport 2-80
M1089
External Hydraulic Power Operation 2-73
Fold Cylinder Does Not Operate 3-3
Hydraulic System Operation (M1089 to M1089) 2-72
Left 30K Winch Does Not Operate 3-3
Left Stiffleg Drifts or Does Not Operate 3-3
M1088/M1089 (LH) Worklight Does Not Illuminate 3-3
M1088/M1089 (RH) Worklight Does Not Illuminate 3-3
M1088/M1089 Transmission Auxiliary Oil Cooler Fan Does Not Operate 3-3
M1088/M1089 Worklights Do Not Illuminate 3-3
M1088/M1089 Worklights Do Not Illuminate in Blackout Mode With Blackout Override Switch On 3-3
Material Handling Crane (MHC) Boom Does Not Lift Up or Down 3-3
Material Handling Crane (MHC) Boom Does Not Telescope In or Out 3-3
Material Handling Crane (MHC) Boom Down Does Not Operate From REMOTE CONTROL UNIT 3-3
Material Handling Crane (MHC) Boom Down Lockout Does Not Activate 3-3
Material Handling Crane (MHC) Boom Swing Drive Assembly Does Not Operate 3-3
Material Handling Crane (MHC) Boom Up Does Not Operate From REMOTE CONTROL UNIT 3-3
Material Handling Crane (MHC) Boom Up Lockout Does Not Activate 3-3
Material Handling Crane (MHC) Does Not Operate 3-3
Material Handling Crane (MHC) Does Not Operate From REMOTE CONTROL UNIT 3-3
Material Handling Crane (MHC) Hand Pump Does Not Operate 3-3
Material Handling Crane (MHC) Hoist Does Not Operate 3-3
Material Handling Crane (MHC) Hoist Down Does Not Operate From REMOTE CONTROL UNIT 3-3
Material Handling Crane (MHC) Hoist Up Does Not Operate From REMOTE CONTROL UNIT 3-3
Material Handling Crane (MHC) Hoist Up Lockout Does Not Activate 3-3
Material Handling Crane (MHC) Left or Right Outrigger (Jack) Drifts or Does Not Operate 3-3
Material Handling Crane (MHC) Mast Does Not Erect or Stow 3-3
Material Handling Crane (MHC) Outrigger Extension Cylinder Does Not Operate 3-3
Material Handling Crane (MHC) Overload Shutdown System Does Not Activate 3-3

SUBJECT INDEX (CONT)

M (Cont)

Subject — Para

M1089 (Cont)
- Material Handling Crane (MHC) Overload Shutdown System Stays Activated . . . 3-3
- Material Handling Crane (MHC) Swing CCW Does Not Operate From REMOTE CONTROL UNIT . . . 3-3
- Material Handling Crane (MHC) Swing CW Does Not Operate From REMOTE CONTROL UNIT . . . 3-3
- Material Handling Crane (MHC) Telescope In Does Not Operate From REMOTE CONTROL UNIT . . . 3-3
- Material Handling Crane (MHC) Telescope Out Does Not Operate From REMOTE CONTROL UNIT . . . 3-3
- Material Handling Crane (MHC) Telescope Out Lockout Does Not Activate . . . 3-3
- No Service or External Hydraulic Power From M1089 . . . 3-3
- Pay-Out Hydraulic Motor Assembly Does Not Operate . . . 3-3
- Right 30K Winch Does Not Operate . . . 3-3
- Right Stiffleg Drifts Or Does Not Operate . . . 3-3
- Stiffleg(s) Does Not Operate Or Operates Slowly . . . 3-3
- Stifflegs/Left 30K Winch/15K Self-Recovery Winch (SRW) Do Not Operate . . . 3-3
- Stinger Does Not Operate . . . 3-3
- Stinger/Telescopic Lift Cylinders/Fold Cylinder/Right 30K Winch Do Not Operate . . . 3-3
- Underlift Telescopic Lift Cylinder(s) Does Not Operate . . . 3-3
- Amber Warning Light Does Not Illuminate . . . 3-3

M1090
- /M1094 Tailgate Release Does Not Operate . . . 3-3
- /M1094 Troopseat Kit Installation/Removal . . . 3-16

M1093
- Air Drop Preparation . . . 3-10
- Air Drop Recovery Operations . . . 3-11
- M1083/M1084/M1093 Troopseat Kit Installation/Removal . . . 3-14

M1094
- Air Drop Preparation . . . 3-12
- Air Drop Recovery Operations . . . 3-13
- M1090/M1094 Tailgate Release Does Not Operate . . . 3-3
- M1090/M1094 Troopseat Kit Installation/Removal . . . 3-16

Machine
- Preparation for Machine Gun Operation . . . 2-71

Maintenance Introduction . . . 3-4

M (Cont)

Subject — Para

Marker
- Blackout Marker Lights Do Not Illuminate . . . 3-3
- LH Door and/or LH Front Marker Lights Do Not Illuminate . . . 3-3
- Highway Emergency Marker Kit Setup . . . 2-59
- One or Both Front Blackout Marker Lights Do Not Illuminate . . . 3-3
- One Or Both Rear Blackout Marker Lights Do Not Illuminate . . . 3-3
- One or More Cab Top Marker Lights Do Not Illuminate . . . 3-3
- RH Door and/or RH Front Marker Lights Do Not Illuminate . . . 3-3
- Side and/or Rear Marker Lights Do Not Illuminate . . . 3-3
- Trailer Blackout Marker Lights Do Not Illuminate . . . 3-3
- Trailer Marker/Taillights Do Not Illuminate . . . 3-3

Mast
- M1084/M1086 Material Handling Crane (MHC) Mast Does Not Erect . . . 3-3
- M1089 Material Handling Crane (MHC) Mast Does Not Erect or Stow . . . 3-3

Master Stop Indicator Does Not Illuminate . . . 3-3

Material
- M1084/M1086 Material Handling Crane (MHC) Boom Does Not Lift Up or Down or Hold Under Load . . . 3-3
- M1084/M1086 Material Handling Crane (MHC) Boom Does Not Telescope In or Out . . . 3-3
- M1084/M1086 Material Handling Crane (MHC) Boom Down Does Not Operate From REMOTE CONTROL UNIT . . . 3-3
- M1084/M1086 Material Handling Crane (MHC) Boom Down Lockout Does Not Activate . . . 3-3
- M1084/M1086 Material Handling Crane (MHC) Boom Up Does Not Operate From REMOTE CONTROL UNIT . . . 3-3
- M1084/M1086 Material Handling Crane (MHC) Boom Up Lockout Does Not Activate . . . 3-3
- M1084/M1086 Material Handling Crane (MHC) Does Not Operate . . . 3-3
- M1084/M1086 Material Handling Crane (MHC) Does Not Operate From REMOTE CONTROL UNIT . . . 3-3
- M1084/M1086 Material Handling Crane (MHC) Hand Pump Does Not Operate . . . 3-3
- M1084/M1086 Material Handling Crane (MHC) Hoist Does Not Operate . . . 3-3
- M1084/M1086 Material Handling Crane (MHC) Hoist Down Does Not Operate From REMOTE CONTROL UNIT . . . 3-3
- M1084/M1086 Material Handling Crane (MHC) Hoist Up Does Not Operate From REMOTE CONTROL UNIT . . . 3-3
- M1084/M1086 Material Handling Crane (MHC) Hoist Up Lockout Does Not Activate . . . 3-3
- M1084/M1086 Material Handling Crane (MHC) Hydraulic Functions Operate Slowly . . . 3-3

SUBJECT INDEX (CONT)

M (Cont)

Subject Para

Material (Cont)
M1084/M1086 Material Handling Crane (MHC) Left Outrigger (Jack) Drifts or Does Not Operate 3-3
M1084/M1086 Material Handling Crane (MHC) Mast Does Not Erect 3-3
M1084/M1086 Material Handling Crane (MHC) Overload Shutdown System Stays Activated 3-3
M1084/M1086 Material Handling Crane (MHC) Overload Shutdown System Does Not Activate 3-3
M1084/M1086 Material Handling Crane (MHC) Right Outrigger (Jack) Drifts or Does Not Operate 3-3
M1084/M1086 Material Handling Crane (MHC) Swing CCW Does Not Operate From REMOTE CONTROL UNIT 3-3
M1084/M1086 Material Handling Crane (MHC) Swing CW Does Not Operate From REMOTE CONTROL UNIT 3-3
M1084/M1086 Material Handling Crane (MHC) Swing Drive Does Not Operate 3-3
M1084/M1086 Material Handling Crane (MHC) Swing, Telescope, Boom, and Hoist Do Not Operate 3-3
M1084/M1086 Material Handling Crane (MHC) Telescope In Does Not Operate From REMOTE CONTROL UNIT 3-3
M1084/M1086 Material Handling Crane (MHC) Telescope Out Does Not Operate From REMOTE CONTROL UNIT 3-3
M1084/M1086 Material Handling Crane (MHC) Telescope Out Lockout Does Not Activate 3-3
M1089 Material Handling Crane (MHC) Boom Does Not Lift Up or Down 3-3
M1089 Material Handling Crane (MHC) Boom Does Not Telescope In or Out 3-3
M1089 Material Handling Crane (MHC) Boom Down Does Not Operate From REMOTE CONTROL UNIT 3-3
M1089 Material Handling Crane (MHC) Boom Down Lockout Does Not Activate 3-3
M1089 Material Handling Crane (MHC) Boom Swing Drive Assembly Does Not Operate 3-3
M1089 Material Handling Crane (MHC) Boom Up Does Not Operate From REMOTE CONTROL UNIT 3-3
M1089 Material Handling Crane (MHC) Boom Up Lockout Does Not Activate 3-3
M1089 Material Handling Crane (MHC) Does Not Operate 3-3
M1089 Material Handling Crane (MHC) Does Not Operate From REMOTE CONTROL UNIT 3-3

M (Cont)

Subject Para

Material (Cont)
M1089 Material Handling Crane (MHC) Hand Pump Does Not Operate 3-3
M1089 Material Handling Crane (MHC) Hoist Does Not Operate 3-3
M1089 Material Handling Crane (MHC) Hoist Down Does Not Operate From REMOTE CONTROL UNIT 3-3
M1089 Material Handling Crane (MHC) Hoist Up Does Not Operate From REMOTE CONTROL UNIT 3-3
M1089 Material Handling Crane (MHC) Hoist Up Lockout Does Not Activate 3-3
M1089 Material Handling Crane (MHC) Left or Right Outrigger (Jack) Drifts or Does Not Operate 3-3
M1089 Material Handling Crane (MHC) Mast Does Not Erect or Stow 3-3
M1089 Material Handling Crane (MHC) Outrigger Extension Cylinder Does Not Operate 3-3
M1089 Material Handling Crane (MHC) Overload Shutdown System Does Not Activate 3-3
M1089 Material Handling Crane (MHC) Overload Shutdown System Stays Activated 3-3
M1089 Material Handling Crane (MHC) Swing CCW Does Not Operate From REMOTE CONTROL UNIT 3-3
M1089 Material Handling Crane (MHC) Swing CW Does Not Operate From REMOTE CONTROL UNIT 3-3
M1089 Material Handling Crane (MHC) Telescope In Does Not Operate From REMOTE CONTROL UNIT 3-3
M1089 Material Handling Crane (MHC) Telescope Out Does Not Operate From REMOTE CONTROL UNIT 3-3
M1089 Material Handling Crane (MHC) Telescope Out Lockout Does Not Activate 3-3
Mode
Two Steady Mode Lights Illuminate On Central Tire Inflation System (CTIS) ECU 3-3
Motor
M1089 Pay-Out Hydraulic Motor Assembly Does Not Operate 3-3
Mud
Operation in Sand or Mud 2-57

N

No
Air Pressure or Low Air Pressure Present at Rear Gladhands 3-3
Overspeed Warning Light and/or Overspeed Pressure Change 3-3
Response When Turning Steering Wheel 3-3

SUBJECT INDEX (CONT)

N (Cont)

Subject Para

No (Cont)
Service or External Hydraulic Power From M1089 3-3
Noisy Air Compressor Operation 3-3

O

Oil
Coolant in Engine Oil 3-3
Engine Oil Pressure Gage Does Not Operate or is Inaccurate 3-3
Engine Oil Pressure Indicator Does Not Operate 3-3
Excessive Engine Oil Consumption 3-3
In Cooling System 3-3
Low Engine Oil Pressure 3-3
Transmission Auxiliary Oil Cooler Fan Does Not Operate (All Models Except M1088/M1089) 3-3
One
Or Both Blackout Stoplights Do Not Illuminate 3-3
Or Both Composite Taillights Do Not Illuminate 3-3
Or Both Front Blackout Marker Lights Do Not Illuminate 3-3
Or Both Headlight High Beams Do Not Illuminate 3-3
Or Both Headlight Low Beams Do Not Illuminate 3-3
Or Both Headlights (High and Low Beam) Do Not Illuminate 3-3
Or Both Rear Blackout Marker Lights Do Not Illuminate 3-3
Or Both Stoplights Do Not Illuminate 3-3
Or More Cab Top Marker Lights Do Not Illuminate 3-3
Wrecker Function Does Not Operate From Wrecker REMOTE CONTROL 3-3
Opening Battery Box/Testing Batteries 3-8
Operate
Air Dryer Does Not Operate (All Models Except M1090/M1094) 3-3
Air Dryer Does Not Operate (M1090/M1094) 3-3
All Windshield Wiper Speeds Do Not Operate 3-3
All Wrecker Functions Do Not Operate From Wrecker Control Panel 3-3
All Wrecker Functions Do Not Operate From Wrecker Control Panel and Wrecker REMOTE CONTROL 3-3
Audible Alarm Does Not Operate (All Models Except M1083/M1090/M1093/M1094) 3-3
Dual Tone Audible Alarm Does Not Operate (Models M1083/M1090/M1094) 3-3
Single Tone Audible Alarm Does Not Operate 3-3
Battery Tester Does Not Operate 3-3
Cab Leveling Air Springs Do Not Operate 3-3
Cab Tilt, Spare Tire Retainer, and Suspension Compression Do Not Operate . . . 3-3

O (Cont)

Subject — Para

Operate (Cont)
Chemical Alarm Does Not Operate 3-3
Chemical Detector Does Not Operate 3-3
Chemical Detector Indicator Does Not Illuminate 3-3
Central Tire Inflation System (CTIS) Does Not Operate 3-3
Differential Lock Solenoid Does Not Operate 3-3
Engine Does Not Crank 3-3
Engine Does Not Crank/24 VDC Circuits Do Not Operate 3-3
Engine Oil Pressure Gage Does Not Operate or is Inaccurate 3-3
Ether Start Does Not Operate 3-3
Ether Starting Aid Does Not Operate 3-3
Fifth Wheel Sliding Mechanism Does Not Operate 3-3
FRONT BRAKE AIR Pressure Gage Does Not Operate or is Inaccurate 3-3
FUEL Gage Does Not Operate or is Inaccurate 3-3
Horn Does Not Operate 3-3
M1084/M1086 Material Handling Crane (MHC) Boom Down Does Not Operate From REMOTE CONTROL UNIT 3-3
M1084/M1086 Material Handling Crane (MHC) Boom Up Does Not Operate From REMOTE CONTROL UNIT 3-3
M1084/M1086 Material Handling Crane (MHC) Does Not Operate 3-3
M1084/M1086 Material Handling Crane (MHC) Does Not Operate From REMOTE CONTROL UNIT 3-3
M1084/M1086 Material Handling Crane (MHC) Hand Pump Does Not Operate . . 3-3
M1084/M1086 Material Handling Crane (MHC) Hoist Does Not Operate 3-3
M1084/M1086 Material Handling Crane (MHC) Hoist Down Does Not Operate From REMOTE CONTROL UNIT 3-3
M1084/M1086 Material Handling Crane (MHC) Hoist Up Does Not Operate From REMOTE CONTROL UNIT 3-3
M1084/M1086 Material Handling Crane (MHC) Hydraulic Functions Operate Slowly 3-3
M1084/M1086 Material Handling Crane (MHC) Left Outrigger (Jack) Drifts or Does Not Operate 3-3
M1084/M1086 Material Handling Crane (MHC) Right Outrigger (Jack) Drifts or Does Not Operate 3-3
M1084/M1086 Material Handling Crane (MHC) Swing CCW Does Not Operate From REMOTE CONTROL UNIT 3-3
M1084/M1086 Material Handling Crane (MHC) Swing CW Does Not Operate From REMOTE CONTROL UNIT 3-3
M1084/M1086 Material Handling Crane (MHC) Swing Drive Does Not Operate 3-3
M1084/M1086 Material Handling Crane (MHC) Swing, Telescope, Boom, and Hoist Do Not Operate 3-3

SUBJECT INDEX (CONT)

O (Cont)

Subject Para

Operate (Cont)
M1084/M1086 Material Handling Crane (MHC) Telescope In Does Not Operate From REMOTE CONTROL UNIT 3-3
M1084/M1086 Material Handling Crane (MHC) Telescope Out Does Not Operate From REMOTE CONTROL UNIT 3-3
M1088 Rear Gladhand(s) Leaks or Does Not Operate 3-3
M1088/M1089 Transmission Auxiliary Oil Cooler Fan Does Not Operate 3-3
M1089 Fold Cylinder Does Not Operate 3-3
M1089 Left 30K Winch Does Not Operate 3-3
M1089 Material Handling Crane (MHC) Boom Down Does Not Operate From REMOTE CONTROL UNIT 3-3
M1089 Material Handling Crane (MHC) Boom Swing Drive Assembly Does Not Operate 3-3
M1089 Material Handling Crane (MHC) Boom Up Does Not Operate From REMOTE CONTROL UNIT 3-3
M1089 Material Handling Crane (MHC) Does Not Operate 3-3
M1089 Material Handling Crane (MHC) Does Not Operate From REMOTE CONTROL UNIT 3-3
M1089 Material Handling Crane (MHC) Hand Pump Does Not Operate 3-3
M1089 Material Handling Crane (MHC) Hoist Does Not Operate 3-3
M1089 Material Handling Crane (MHC) Hoist Down Does Not Operate From REMOTE CONTROL UNIT 3-3
M1089 Material Handling Crane (MHC) Hoist Up Does Not Operate From REMOTE CONTROL UNIT 3-3
M1089 Material Handling Crane (MHC) Left or Right Outrigger (Jack) Drifts or Does Not Operate 3-3
M1089 Material Handling Crane (MHC) Outrigger Extension Cylinder Does Not Operate 3-3
M1089 Material Handling Crane (MHC) Swing CCW Does Not Operate From REMOTE CONTROL UNIT 3-3
M1089 Material Handling Crane (MHC) Swing CW Does Not Operate From REMOTE CONTROL UNIT 3-3
M1089 Material Handling Crane (MHC) Telescope In Does Not Operate From REMOTE CONTROL UNIT 3-3
M1089 Material Handling Crane (MHC) Telescope Out Does Not Operate From REMOTE CONTROL UNIT 3-3
M1089 Left Stiffleg Drifts or Does Not Operate 3-3
M1089 Pay-Out Hydraulic Motor Assembly Does Not Operate 3-3
M1089 Right Stiffleg Drifts or Does Not Operate 3-3
M1089 Right 30K Winch Does Not Operate 3-3

O (Cont)

Subject Para

Operate (Cont)
M1089 Stiffleg(s) Does Not Operate Or Operates Slowly 3-3
M1089 Stifflegs/Left 30K Winch/15K Self-Recovery Winch (SRW) Do Not Operate 3-3
M1089 Stinger Does Not Operate 3-3
M1089 Stinger/Telescopic Lift Cylinders/Fold Cylinder/Right 30K Winch Do Not Operate 3-3
M1089 Underlift Telescopic Lift Cylinder(s) Does Not Operate 3-3
M1090/M1094 Air Dryer Does Not Operate 3-3
M1090/M1094 Tailgate Release Does Not Operate 3-3
15K Self-Recovery Winch (SRW) Does Not Operate 3-3
30K Winch Left or Right Freespool Function Does Not Operate From Wrecker Control Panel 3-3
30K Winch Left or Right Speed Function Does Not Operate From Wrecker Control Panel 3-3
One Wrecker Function Does Not Operate From Wrecker REMOTE CONTROL . . 3-3
Personnel Heater Control Illumination Does Not Operate 3-3
Personnel Heater Fan Does Not Operate 3-3
Power Take-Off (PTO) Does Not Operate 3-3
Radio Does Not Operate 3-3
REAR BRAKE AIR Pressure Gage Does Not Operate or is Inaccurate 3-3
Speedometer Does Not Operate or is Inaccurate 3-3
Start Inhibit Pushbutton Switch Does Not Operate 3-3
Steering Hard or Does Not Operate 3-3
Stoplights Do Not Illuminate When M1088 Trailer Brakes Are Applied 3-3
Tachometer Does Not Operate or is Inaccurate 3-3
Transmission Auxiliary Oil Cooler Fan Does Not Operate (All Models Except M1088/M1089) 3-3
VOLTS Gage Does Not Operate or is Inaccurate 3-3
WATER TEMP Gage Does Not Operate or is Inaccurate 3-3
Windshield Washer Does Not Operate 3-3
Windshield Wiper Does Not Operate On High Speed 3-3
Windshield Wiper Does Not Operate On Intermittent Speed 3-3
Windshield Wiper Does Not Operate On Low Speed 3-3
Wrecker Left or Right 30K Winch Cable Drum Tensioner Does Not Operate 3-3
Wrecker Left or Right 30K Winch Freespool Does Not Operate 3-3
Operating
Propeller Shafts or Universal Joints Unusually Noisy When Operating 3-3
Transmission Unusually Noisy When Operating 3-3
Operation
Air System Loses Pressure During Operation/Slow Air Pressure Buildup 3-3
Auxiliary Equipment Operation 2-51

SUBJECT INDEX (CONT)

O (Cont)

Subject — Para

Operation (Cont)
- Back-Up Hydraulic Pump Operation 2-52
- Exhaust System Unusually Noisy or Vibrates Excessively During Engine Operation 3-3
- Fire Extinguisher Operation 2-59
- Hydraulic System Operation (M1089 to M1089) 2-72
- In Desert Environment 2-58
- In Extreme Dust 2-55
- In Extreme Heat 2-54
- In Forest or on Rocky Terrain 2-56
- In Sand or Mud 2-57
- M1089 External Hydraulic Power Operation 2-73
- Master Stop Indicator Does Not Illuminate 3-3
- Noisy Air Compressor Operation 3-3
- Preparation for Machine Gun Operation 2-71
- 15K Self-Recovery Winch (SRW) Operation 2-65
- Starting on Hill Operation 2-75
- Vehicle Operation in Cold Environment, 32°F to -25°F (0°C to -32°C) 2-78

Operations
- M1093 Air Drop Recovery Operations 3-11
- M1094 Air Drop Recovery Operations 3-13

Outrigger
- M1084/M1086 Material Handling Crane (MHC) Left Outrigger (Jack) Drifts or Does Not Operate 3-3
- M1084/M1086 Material Handling Crane (MHC) Right Outrigger (Jack) Drifts or Does Not Operate 3-3
- M1089 Material Handling Crane (MHC) Left or Right Outrigger (Jack) Drifts or Does Not Operate 3-3
- M1089 Material Handling Crane (MHC) Outrigger Extension Cylinder Does Not Operate 3-3

Overheat
- Front Brakes Overheat 3-3
- Rear Brakes Overheat 3-3

Overheats
- Engine Overheats 3-3

Overload
- M1084/M1086 Material Handling Crane (MHC) Overload Shutdown System Stays Activated 3-3
- M1084/M1086 Material Handling Crane (MHC) Overload Shutdown System Does Not Activate 3-3

O (Cont)

Subject Para

Overload (Cont)
M1089 Material Handling Crane (MHC) Overload Shutdown System Does Not Activate 3-3
M1089 Material Handling Crane (MHC) Overload Shutdown System Stays Activated 3-3
Override
M1088/M1089 Worklights Do Not Illuminate in Blackout Mode With Blackout Override Switch On 3-3
Overspeed
Central Tire Inflation System (CTIS) Overspeed Indicator Does Not Illuminate 3-3
Engine Overspeeds On Start 3-3
No Overspeed Warning Light and/or Overspeed Pressure Change 3-3

P

Panel
All Wrecker Functions Do Not Operate From Wrecker Control Panel 3-3
All Wrecker Functions Do Not Operate From Wrecker Control Panel and Wrecker REMOTE CONTROL 3-3
Auxiliary Panel Does Not Illuminate 3-3
Auxiliary Panel Switch Does Not Illuminate 3-3
Auxiliary Panel, Personnel Heater, and Instrument Panel Do Not Illuminate 3-3
Instrument Panel Gage Does Not Illuminate 3-3
Instrument Panel Switch Does Not Illuminate 3-3
30K Winch Left or Right Freespool Function Does Not Operate From Wrecker Control Panel 3-3
30K Winch Left or Right Speed Function Does Not Operate From Wrecker Control Panel 3-3
Power Distribution Panel (PDP) Cover Removal/Installation 3-17
Parking
Brake Indicator and/or Emergency Brake Indicator Does Not Illuminate 3-3
Brake(s) Will Not Release 3-3
Brakes Do Not Apply 3-3
Parking Lights Do Not Illuminate 3-3
Pay-Out
M1089 Pay-Out Hydraulic Motor Assembly Does Not Operate 3-3
15K Self-Recovery Winch (SRW) Does Not Pay Out 3-3
15K Self-Recovery Winch (SRW) Does Not Reel In or Pay Out 3-3
Pedal
Accelerator Pedal Sticks 3-3

SUBJECT INDEX (CONT)

P (Cont)

Subject — Para

Personnel
- Heater Control Illumination Does Not Operate . . . 3-3
- Heater Fan Does Not Operate . . . 3-3

Plates
- Data and Instruction Plates . . . 2-52

Power
- Distribution Panel (PDP) Cover Removal/Installation . . . 3-17
- No Service or External Hydraulic Power From M1089 . . . 3-3

Preparation
- for Internal Air Transport . . . 2-69
- for Machine Gun Operation . . . 2-71
- for Shipment . . . 2-68

Procedures
- Emergency Procedures . . . 2-67
- Servicing Air Filter (Emergency Procedure) . . . 3-9
- Troubleshooting Procedures . . . 3-3

Propeller Shafts or Universal Joints Unusually Noisy When Operating . . . 3-3

PTO
- Does Not Engage . . . 3-3
- Does Not Operate . . . 3-3
- Indicator Does Not Illuminate . . . 3-3

Pump
- Back-Up Hydraulic Pump Operation . . . 2-52
- Loss of Hydraulic Pressure (Single Stage Pump) . . . 3-3
- Loss of Hydraulic Pressure (Three Stage Pump) . . . 3-3
- M1084/M1086 Material Handling Crane (MHC) Hand Pump Does Not Operate . . . 3-3
- M1089 Material Handling Crane (MHC) Hand Pump Does Not Operate . . . 3-3

Pushbutton
- Start Inhibit Pushbutton Switch Does Not Operate . . . 3-3
- Transmission Pushbutton Shift Selector Emits Eight Seconds of Beeps and/or Transmission Does Not Shift Gears . . . 3-3

R

Radio Does Not Operate . . . 3-3

Raise
- Cab Does Not Raise or Lower Properly . . . 3-3
- Dump Body Does Not Raise . . . 3-3
- Dump Body Does Not Raise or Lower . . . 3-3
- Spare Tire Does Not Raise or Lower Properly . . . 3-3

R (Cont)

Subject — Para

Rapid Engine Warm-Up 2-70
Rear
  Brake Air Indicator Does Not Illuminate 3-3
  BRAKE AIR Pressure Gage Does Not Operate or is Inaccurate 3-3
  Brakes Do Not Apply 3-3
  Brakes Overheat 3-3
  Front and Rear Hazard Lights Do Not Illuminate 3-3
  Front And Rear Turn Signals Do Not Illuminate 3-3
  Hazard Lights Do Not Illuminate 3-3
  Leans to One Side or Rear of Vehicle Sags 3-3
  M1088 Rear Gladhand(s) Leaks or Does Not Operate 3-3
  No Air Pressure or Low Air Pressure Present at Rear Gladhands 3-3
  One Or Both Rear Blackout Marker Lights Do Not Illuminate 3-3
  Side and/or Rear Marker Lights Do Not Illuminate 3-3
Recovery
  M1093 Air Drop Recovery Operations 3-11
  M1094 Air Drop Recovery Operations 3-13
Reel
  15K Self-Recovery Winch (SRW) Does Not Reel In 3-3
  15K Self-Recovery Winch (SRW) Does Not Reel In or Pay Out 3-3
Remote
  All Wrecker Functions Do Not Operate From Wrecker Control Panel
    and Wrecker REMOTE CONTROL 3-3
  All Wrecker Functions Do Not Operate From Wrecker REMOTE CONTROL 3-3
  M1084/M1086 Material Handling Crane (MHC) Boom Down Does Not
    Operate From REMOTE CONTROL UNIT 3-3
  M1084/M1086 Material Handling Crane (MHC) Boom Up Does Not
    Operate From REMOTE CONTROL UNIT 3-3
  M1084/M1086 Material Handling Crane (MHC) Does Not Operate
    From REMOTE CONTROL UNIT 3-3
  M1084/M1086 Material Handling Crane (MHC) Hoist Down Does
    Not Operate From REMOTE CONTROL UNIT 3-3
  M1084/M1086 Material Handling Crane (MHC) Hoist Up Does Not
    Operate From REMOTE CONTROL UNIT 3-3
  M1084/M1086 Material Handling Crane (MHC) Swing CCW Does Not
    Operate From REMOTE CONTROL UNIT 3-3
  M1084/M1086 Material Handling Crane (MHC) Swing CW Does Not
    Operate From REMOTE CONTROL UNIT 3-3
  M1084/M1086 Material Handling Crane (MHC) Telescope In Does Not
    Operate From REMOTE CONTROL UNIT 3-3
  M1084/M1086 Material Handling Crane (MHC) Telescope Out Does Not
    Operate From REMOTE CONTROL UNIT 3-3
  M1089 Material Handling Crane (MHC) Boom Down Does Not Operate
    From REMOTE CONTROL UNIT 3-3

SUBJECT INDEX (CONT)

R (Cont)

Subject Para

Remote (Cont)
M1089 Material Handling Crane (MHC) Boom Up Does Not Operate From REMOTE CONTROL UNIT 3-3
M1089 Material Handling Crane (MHC) Does Not Operate From REMOTE CONTROL UNIT 3-3
M1089 Material Handling Crane (MHC) Hoist Down Does Not Operate From REMOTE CONTROL UNIT 3-3
M1089 Material Handling Crane (MHC) Hoist Up Does Not Operate From REMOTE CONTROL UNIT 3-3
M1089 Material Handling Crane (MHC) Swing CW Does Not Operate From REMOTE CONTROL UNIT 3-3
M1089 Material Handling Crane (MHC) Telescope In Does Not Operate From REMOTE CONTROL UNIT 3-3
M1089 Material Handling Crane (MHC) Telescope Out Does Not Operate From REMOTE CONTROL UNIT 3-3
One Wrecker Function Does Not Operate From Wrecker REMOTE CONTROL . . 3-3
Reservoirs
Large Quantity of Moisture Expelled From Air Reservoirs 3-3
Retainer
Cab Tilt, Spare Tire Retainer, and Suspension Compression Do Not Operate 3-3
RH Door and/or RH Front Marker Lights Do Not Illuminate 3-3
Right
Trailer Right Stop/Turn Light Does Not Illuminate 3-3
Turn Signal Indicator Does Not Illuminate 3-3
Wrecker Left or Right 30K Winch Cable Drum Tensioner Does Not Operate 3-3
Wrecker Left or Right 30K Winch Freespool Does Not Operate 3-3
Rocky
Operation in Forest or on Rocky Terrain 2-56

S

Sags
Leans to One Side or Rear of Vehicle Sags 3-3
Sand
Operation in Sand or Mud 2-57
Self-Recovery (15K)
M1089 Stifflegs/Left 30K Winch/15K Self-Recovery Winch (SRW) Do Not Operate 3-3
Winch (SRW) Does Not Pay Out 3-3

S (Cont)

Subject Para

Self-Recovery (15K) (Cont)
Winch (SRW) Does Not Reel In 3-3
Winch (SRW) Does Not Reel In or Pay Out 3-3
Winch (SRW) Operation 2-65
Winch (SRW) Does Not Operate 3-3
Servicing
Air Filter (Emergency Procedure) 3-9
Tires 3-6
Shafts
Propeller Shafts or Universal Joints Unusually Noisy When Operating 3-3
Ship
M1088 Tractor Preparation for Air or Ship Transport 2-80
Shipment
Preparation for Shipment 2-67
Shutdown
M1084/M1086 Material Handling Crane (MHC) Overload Shutdown System Stays Activated 3-3
M1084/M1086 Material Handling Crane (MHC) Overload Shutdown System Does Not Activate 3-3
M1089 Material Handling Crane (MHC) Overload Shutdown System Does Not Activate 3-3
M1089 Material Handling Crane (MHC) Overload Shutdown System Stays Activated 3-3
Side and/or Rear Marker Lights Do Not Illuminate 3-3
Signal
Intervehicle Left Turn Signal Does Not Illuminate 3-3
Intervehicle Right Turn Signal Does Not Illuminate 3-3
Left or Right Front Turn Signal Does Not Illuminate 3-3
Left Turn Signal Indicator Does Not Illuminate 3-3
Right Turn Signal Indicator Does Not Illuminate 3-3
Turn Signal Indicators and High Beams On Indicator Do Not Illuminate 3-3
Signals
Front And Rear Turn Signals Do Not Illuminate 3-3
Single
Loss of Hydraulic Pressure (Single Stage Pump) 3-3
Sliding
Fifth Wheel Sliding Mechanism Does Not Operate 3-3
Snatch Block Installation/Removal 2-77
Solenoid
Differential Lock Solenoid Does Not Operate 3-3
Spare
Cab Tilt, Spare Tire Retainer, and Suspension Compression Do Not Operate 3-3
Tire Does Not Raise or Lower Properly 3-3

SUBJECT INDEX (CONT)

S (Cont)

Subject — Para

Speed
- Engine Speed is Not Stable . . . 3-3
- 30K Winch Left or Right Speed Function Does Not Operate From Wrecker Control Panel . . . 3-3
- 30K Winch Left or Right Speed Function Does Not Operate From Wrecker Control Panel . . . 3-3
- Windshield Wiper Does Not Operate On High Speed . . . 3-3
- Windshield Wiper Does Not Operate On Intermittent Speed . . . 3-3
- Windshield Wiper Does Not Operate On Low Speed . . . 3-3

Speedometer Does Not Operate or is Inaccurate . . . 3-3

Springs
- Cab Leveling Air Springs Do Not Work Properly . . . 3-3

Stage
- Loss of Hydraulic Pressure (Single Stage Pump) . . . 3-3
- Loss of Hydraulic Pressure (Three Stage Pump) . . . 3-3

Stalls
- Engine Stalls at Low RPM . . . 3-3

Start
- Engine Cranks But Does Not Start . . . 3-3
- Engine Cranks But Does Not Start or Engine Stalls After Starting . . . 3-3
- Engine Overspeeds On Start . . . 3-3
- Ether Start Does Not Operate . . . 3-3
- Inhibit Pushbutton Switch Does Not Operate . . . 3-3

Starts
- Engine Starts But Misfires, Runs Rough, or Lacks Power . . . 3-3

Starting
- Engine Cranks But Does Not Start or Engine Stalls After Starting . . . 3-3
- Ether Starting Aid Does Not Operate . . . 3-3
- On Hill Operation . . . 2-75

Steer
- Hard to Steer . . . 3-3

Steering
- Excessive Play When Turning Steering Wheel . . . 3-3
- Hard or Does Not Operate . . . 3-3
- No Response When Turning Steering Wheel . . . 3-3

Stiffleg
- M1089 Left Stiffleg Drifts or Does Not Operate . . . 3-3
- M1089 Right Stiffleg Drifts Or Does Not Operate . . . 3-3
- M1089 Stiffleg(s) Does Not Operate Or Operates Slowly . . . 3-3

S (Cont)

Subject Para

Stifflegs
M1089 Stifflegs/Left 30K Winch/15K Self-Recovery Winch (SRW) Do Not Operate . . . 3-3
Stinger
M1089 Stinger Does Not Operate . . . 3-3
M1089 Stinger/Telescopic Lift Cylinders/Fold Cylinder/Right 30K Winch Do Not Operate . . . 3-3
Stop
Master Stop Indicator Does Not Illuminate . . . 3-3
Trailer Left Stop/Turn Light Does Not Illuminate . . . 3-3
Trailer Right Stop/Turn Light Does Not Illuminate . . . 3-3
Stoplights
And Blackout Stoplights Do Not Illuminate . . . 3-3
Do Not Illuminate When M1088 Trailer Brakes Are Applied . . . 3-3
Intervehicle Stoplights Do Not Illuminate . . . 3-3
One or Both Blackout Stoplights Do Not Illuminate . . . 3-3
One Or Both Stoplights Do Not Illuminate . . . 3-3
Trailer Blackout Stoplights Do Not Illuminate . . . 3-3
Suspension
Cab Tilt, Spare Tire Retainer, and Suspension Compression Does Not Operate . . . 3-3
Does Not Operate . . . 3-3
Does Not Compress or Return To Normal Properly . . . 3-3
Swing
M1084/M1086 Material Handling Crane (MHC) Swing CCW Does Not Operate From REMOTE CONTROL UNIT . . . 3-3
M1084/M1086 Material Handling Crane (MHC) Swing CW Does Not Operate From REMOTE CONTROL UNIT . . . 3-3
M1084/M1086 Material Handling Crane (MHC) Swing Drive Does Not Operate . . . 3-3
M1084/M1086 Material Handling Crane (MHC) Swing, Telescope, Boom, and Hoist Do Not Operate . . . 3-3
M1089 Material Handling Crane (MHC) Boom Swing Drive Assembly Does Not Work . . . 3-3
M1089 Material Handling Crane (MHC) Swing CCW Does Not Operate From Remote Station . . . 3-3
M1089 Material Handling Crane (MHC) Swing CW Does Not Operate From Remote Station . . . 3-3
Switch
Auxiliary Panel Switch Does Not Illuminate . . . 3-3
Engine Fan Does Not Turn Off Using Radiator Fan Off Switch . . . 3-3
Instrument Panel Switch Does Not Illuminate . . . 3-3
Lamp Test Switch Does Not Illuminate . . . 3-3

SUBJECT INDEX (CONT)

S (Cont)

Subject Para

Switch (Cont)
M1088/M1089 Worklights Do Not Illuminate in Blackout Mode With Blackout Override Switch On 3-3
Start Inhibit Pushbutton Switch Does Not Operate 3-3
System
Air System Loses Pressure During Operation/Slow Air Pressure Buildup 3-3
Air System Pressure Builds Up More Than 120 psi (827 kPa) (Compressor Fails To Unload) 3-3
Electrical System Does Not Maintain a Charge 3-3
Exhaust System Unusually Noisy or Vibrates Excessively During Engine Operation 3-3
M1084/M1086 Material Handling Crane (MHC) Overload Shutdown System Stays Activated 3-3
M1084/M1086 Material Handling Crane (MHC) Overload Shutdown System Does Not Activate 3-3
M1089 Material Handling Crane (MHC) Overload Shutdown System Does Not Activate 3-3
M1089 Material Handling Crane (MHC) Overload Shutdown System Stays Activated 3-3
Oil In Cooling System 3-3

T

Tachometer
Does Not Illuminate 3-3
Does Not Operate or is Inaccurate 3-3
Tailgate
M1090/M1094 Tailgate Release Does Not Operate 3-3
Taillights
Intervehicle Taillights Do Not Illuminate 3-3
One or Both Composite Taillights Do Not Illuminate 3-3
Trailer Marker/Taillights Do Not Illuminate 3-3
Telescope
M1084/M1086 Material Handling Crane (MHC) Boom Does Not Telescope In or Out 3-3
M1084/M1086 Material Handling Crane (MHC) Swing, Telescope, Boom, and Hoist Do Not Operate 3-3
M1084/M1086 Material Handling Crane (MHC) Telescope In Does Not Operate From REMOTE CONTROL UNIT 3-3

T (Cont)

Subject — Para

Telescope (Cont)
- M1084/M1086 Material Handling Crane (MHC) Telescope Out Does Not Operate From REMOTE CONTROL UNIT . . . 3-3
- M1084/M1086 Material Handling Crane (MHC) Telescope Out Lockout Does Not Activate . . . 3-3
- M1089 Material Handling Crane (MHC) Boom Does Not Telescope In or Out . . . 3-3
- M1089 Material Handling Crane (MHC) Telescope In Does Not Operate From REMOTE CONTROL UNIT . . . 3-3
- M1089 Material Handling Crane (MHC) Telescope Out Does Not Operate From REMOTE CONTROL UNIT . . . 3-3
- M1089 Material Handling Crane (MHC) Telescope Out Lockout Does Not Activate . . . 3-3
- M1089 Stinger/Telescopic Lift Cylinders/Fold Cylinder/Right 30K Winch Do Not Operate . . . 3-3
- M1089 Underlift Telescopic Lift Cylinder(s) Does Not Operate . . . 3-3

Temperature
- High Engine Temperature Indicator Does Not Illuminate . . . 3-3
- Transmission Temperature Indicator Does Not Illuminate . . . 3-3

Tensioner
- Wrecker Left or Right 30K Winch Cable Drum Tensioner Does Not Operate . . . 3-3

Test
- Lamp Test Switch Does Not Illuminate . . . 3-3

Testing
- Opening Battery Box/Testing Batteries . . . 3-8

Three
- Loss of Hydraulic Pressure (Three Stage Pump) . . . 3-3

Tire
- Cab Tilt, Spare Tire Retainer, and Suspension Compression Do Not Operate . . . 3-3
- Chains Installation/Removal . . . 2-76
- Changing Tire . . . 3-5
- Spare Tire Does Not Raise or Lower Properly . . . 3-3

Tires
- Continue To Wear After Front End Alignment and/or Vehicle Drives Sideways Down Road . . . 3-3
- Central Tire Inflation System (CTIS) Does Not Deflate Tires . . . 3-3
- Central Tire Inflation System (CTIS) Does Not Inflate Tires . . . 3-3
- Servicing Tires . . . 3-6
- Wear Unevenly or Excessively . . . 3-3

Too Much Vibration In Engine . . . 3-3

Towbar Connection/Disconnection . . . 2-61

SUBJECT INDEX (CONT)

T (Cont)

Subject — Para

Towing
- Disabled Vehicle 2-62

Tractor
- Fifth Wheel Does Not Lock When Coupling Trailer to Tractor 3-3
- Fifth Wheel Does Not Unlock When Disconnecting Trailer From Tractor 3-3
- M1088 Tractor Preparation for Air or Ship Transport 2-80

Trailer
- Blackout Marker Lights Do Not Illuminate 3-3
- Blackout Stoplights Do Not Illuminate 3-3
- Excessive Movement of Trailer King Pin in Fifth Wheel 3-3
- Fifth Wheel Does Not Lock When Coupling Trailer to Tractor 3-3
- Fifth Wheel Does Not Unlock When Disconnecting Trailer From Tractor 3-3
- Left Stop/Turn Light Does Not Illuminate 3-3
- Marker/Taillights Do Not Illuminate 3-3
- Right Stop/Turn Light Does Not Illuminate 3-3
- Stoplights Do Not Operate When M1088 Trailer Brakes Are Applied 3-3

Transmission
- Auxiliary Oil Cooler Fan Does Not Operate (All Models Except M1088/M1089) 3-3
- M1088/M1089 Transmission Auxiliary Oil Cooler Fan Does Not Operate 3-3
- Pushbutton Shift Selector Emits Eight Seconds of Beeps and/or Transmission Does Not Shift Gears 3-3
- Temperature Indicator Does Not Illuminate 3-3
- Unusually Noisy When Operating 3-3

Transport
- M1088 Tractor Preparation for Air or Ship Transport 2-80

Troopseat
- M1083/M1084/M1093 Troopseat Kit Installation/Removal 3-14
- M1085 Troopseat Kit Installation/Removal 3-15
- M1090/M1094 Troopseat Kit Installation/Removal 3-16

Troubleshooting
- Introduction 3-2
- Procedures 3-3

Two Steady Mode Lights Illuminate On Central Tire Inflation System (CTIS) ECU 3-3

Turn
- Front And Rear Turn Signals Do Not Illuminate 3-3
- Intervehicle Left Turn Signal Does Not Illuminate 3-3
- Intervehicle Right Turn Signal Does Not Illuminate 3-3
- Left or Right Front Turn Signal Does Not Illuminate 3-3
- Left Turn Signal Indicator Does Not Illuminate 3-3
- Signal Indicators and High Beams On Indicator Do Not Operate 3-3

U

Subject Para

Underlift
M1089 Underlift Telescopic Lift Cylinder(s) Does Not Operate 3-3
Universal
Propeller Shafts or Universal Joints Unusually Noisy When Operating 3-3

V

Vehicle
Operation in Cold Environment, 32°F to -25°F (0°C to -32°C) 2-78
Brakes Unevenly, Brakes Pull To One Side or Grab 3-3
VOLTS Gage Does Not Operate or is Inaccurate 3-3

W

Wanders
Pulls To One Side, or Shimmies 3-3
No Overspeed Warning Light and/or Overspeed Pressure Change 3-3
Washer
Windshield Washer Does Not Operate 3-3
Water
Temperature Gage Does Not Operate or is Inaccurate 3-3
Wheel
Excessive Movement of Trailer King Pin in Fifth Wheel 3-3
Excessive Play When Turning Steering Wheel 3-3
Fifth Wheel Does Not Lock When Coupling Trailer to Tractor 3-3
Fifth Wheel Does Not Unlock When Disconnecting Trailer From Tractor 3-3
Fifth Wheel Sliding Mechanism Does Not Operate 3-3
No Response When Turning Steering Wheel 3-3
Wobbles or Shimmies 3-3
White Exhaust Smoke 3-3
Winch
30K Winch Left or Right Freespool Function Does Not Operate From Wrecker Control Panel 3-3
30K Winch Left or Right Speed Function Does Not Operate From Wrecker Control Panel 3-3
M1089 Left 30K Winch Does Not Operate 3-3
M1089 Right 30K Winch Does Not Operate 3-3
M1089 Stifflegs/Left 30K Winch/15K Self-Recovery Winch (SRW) Do Not Operate 3-3
M1089 Stinger/Telescopic Lift Cylinders/Fold Cylinder/Right 30K Winch Do Not Operate 3-3
15K Self-Recovery Winch (SRW) Does Not Pay Out 3-3

SUBJECT INDEX (CONT)

W (Cont)

Subject — Para

Winch (Cont)
- 15K Self-Recovery Winch (SRW) Does Not Reel In 3-3
- 15K Self-Recovery Winch (SRW) Does Not Reel In or Pay Out 3-3
- 15K Self-Recovery Winch (SRW) Operation 2-65
- 15K Self-Recovery Winch (SRW) Does Not Work 3-3
- Wrecker Left or Right 30K Winch Cable Drum Tensioner Does Not Operate 3-3
- Wrecker Left or Right 30K Winch Freespool Does Not Operate 3-3

Windshield
- All Windshield Wiper Speeds Do Not Operate 3-3
- Washer Does Not Operate 3-3
- Wiper Does Not Operate On High Speed 3-3
- Wiper Does Not Operate On Intermittent Speed 3-3
- Wiper Does Not Operate On Low Speed 3-3

Wiper
- All Windshield Wiper Speeds Do Not Operate 3-3
- Windshield Wiper Does Not Operate On High Speed 3-3
- Windshield Wiper Does Not Operate On Intermittent Speed 3-3
- Windshield Wiper Does Not Operate On Low Speed 3-3

Worklight
- M1088/M1089 (LH) Worklight Does Not Illuminate 3-3
- M1088/M1089 (RH) Worklight Does Not Illuminate 3-3

Worklights
- M1084/M1086 Worklights Do Not Illuminate 3-3
- M1088/M1089 Worklights Do Not Illuminate 3-3
- M1088/M1089 Worklights Do Not Illuminate in Blackout Mode With Blackout Override Switch On 3-3

Wrecker
- All Wrecker Functions Do Not Operate From Wrecker Control Panel 3-3
- All Wrecker Functions Do Not Operate From Wrecker Control Panel and Wrecker REMOTE CONTROL 3-3
- All Wrecker Functions Do Not Operate From Wrecker REMOTE CONTROL 3-3
- Left or Right 30K Winch Cable Drum Tensioner Does Not Operate 3-3
- Left or Right 30K Winch Freespool Does Not Operate 3-3
- 30K Winch Left or Right Freespool Function Does Not Operate From Wrecker Control Panel 3-3
- 30K Winch Left or Right Speed Function Does Not Operate From Wrecker Control Panel 3-3
- One Wrecker Function Does Not Operate From Wrecker REMOTE CONTROL . . 3-3

By Order of the Secretary of the Army:

DENNIS J. REIMER
General, United Stales Army
Chief of Staff

Official:

JOEL B. HUDSON
Administrative Assistant to the
Secretary *of* **the Army**
05126

DISTRIBUTION: To be distributed in accordance with the initial distribution number (IDN) 380938, requirements for TM 9-2320-366-10-2.

RECOMMENDED CHANGES TO EQUIPMENT TECHNICAL PUBLICATIONS

SOMETHING WRONG WITH PUBLICATION

FROM: (PRINT YOUR UNIT'S COMPLETE ADDRESS)

DATE SENT

PUBLICATION NUMBER	PUBLICATION DATE	PUBLICATION TITLE

BE EXACT PIN-POINT WHERE IT IS

PAGE NO.	PARA-GRAPH	FIGURE NO.	TABLE NO.

IN THIS SPACE, TELL WHAT IS WRONG AND WHAT SHOULD BE DONE ABOUT IT.

PRINTED NAME, GRADE OR TITLE AND TELEPHONE NUMBER	SIGN HERE

TEAR ALONG PERFORATED LINE

DA FORM 1 JUL 79 2028-2

PREVIOUS EDITIONS ARE OBSOLETE.

P.S.--IF YOUR OUTFIT WANTS TO KNOW ABOUT YOUR RECOMMENDATION MAKE A CARBON COPY OF THIS AND GIVE IT TO YOUR HEADQUARTERS.

THE METRIC SYSTEM AND EQUIVALENTS

LINEAR MEASURE
1 Centimeter = 10 Millimeters = 0.01 Meters = 0.3937 Inches
1 Meter = 100 Centimeters = 1000 Millimeters = 39.37 Inches
1 Kilometer = 1000 Meters = 0.621 Miles

WEIGHTS
1 Gram = 0.001 Kilograms = 1000 Milligrams = 0.035 Ounces
1 Kilogram = 1000 Grams = 2.2 Lb
1 Metric Ton = 1000 Kilograms = 1 Megagram = 1.1 Short Tons

LIQUID MEASURE
1 Milliliter = 0.001 Liters = 0.0338 Fluid Ounces
1 Liter = 1000 Milliliters = 33.82 Fluid Ounces

SQUARE MEASURE
1 Sq Centimeter = 100 Sq Millimeters = 0.155 Sq Inches
1 Sq Meter = 10,000 Sq Centimeters = 10.76 Sq Feet
1 Sq Kilometer = 1,000,000 Sq Meters = 0.386 Sq Miles

CUBIC MEASURE
1 Cu Centimeter = 1000 Cu Millimeters = 0.06 Cu Inches
1 Cu Meter = 1,000,000 Cu Centimeters = 35.31 Cu Feet

TEMPERATURE
5/9 (°F - 32) = °C
212° Fahrenheit is equivalent to 100° Celsius
90° Fahrenheit is equivalent to 32.2° Celsius
32° Fahrenheit is equivalent to 0° Celsius
9/5 C° + 32 = F°

APPROXIMATE CONVERSION FACTORS

TO CHANGE	TO	MULTIPLY BY
Inches	Centimeters	2.540
Inches	Millimeters	25.4
Feet	Meters	0.305
Yards	Meters	0.914
Miles	Kilometers	1.609
Square Inches	Square Centimeters	6.451
Square Feet	Square Meters	0.093
Square Yards	Square Meters	0.836
Square Miles	Square Kilometers	2.590
Acres	Square Hectometers	0.405
Cubic Feet	Cubic Meters	0.028
Cubic Yards	Cubic Meters	0.765
Fluid Ounces	Milliliters	29.57
Pints	Liters	0.473
Quarts	Liters	0.946
Gallons	Liters	3.785
Ounces	Grams	28.35
Pounds	Kilograms	0.454
Short Tons	Metric Tons	0.907
Pound-Feet	Newton-Meters	1.356
Pounds/Sq Inch	Kilopascals	6.895
Miles per Gallon	Kilometers per Hour	0.425
Miles per Hour	Kilometers per Hour	1.609

TO CHANGE	TO	MULTIPLY BY
Centimeters	Inches	0.394
Millimeters	Inches	0.0394
Meters	Feet	3.280
Meters	Yards	1.094
Kilometers	Miles	0.621
Sq Centimeters	Square Inches	0.155
Square Meters	Square Feet	10.764
Square Meters	Square Yards	1.196
Square Kilometers	Square Miles	0.386
Sq Hectometers	Acres	2.471
Cubic Meters	Cubic Feet	35.315
Cubic Meters	Cubic Yards	1.308
Milliliters	Fluid Ounces	0.034
Liters	Pints	2.113
Liters	Quarts	1.057
Liters	Gallons	0.264
Grams	Ounces	0.035
Kilograms	Pounds	2.205
Metric Tons	Short Tons	1.102
Newton-Meters	Pound-Feet	0.738
Kilopascals	Pounds per Sq Inch	0.145
Km per Liter	Miles per Gallon	2.354
Km per Hour	Miles per Hour	0.621

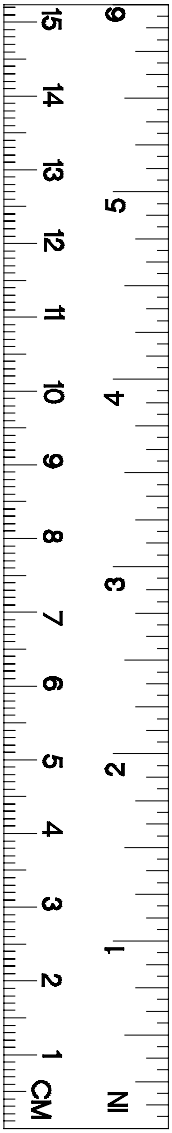

APPG01--

PIN: 076873-001