*TM 9-6115-660-13&P

TECHNICAL MANUAL

OPERATOR AND FIELD MAINTENANCE MANUAL INCLUDING REPAIR PARTS AND SPECIAL TOOLS LIST

FOR

POWER UNIT, DIESEL ENGINE DRIVEN, 1 TON TRAILER MOUNTED,
10 kW, 60 Hz, PU-798
(NSN: 6115-01-319-9032) (EIC: VK5)
10 kW, 400 Hz, PU-799
(NSN: 6115-01-313-4283) (EIC: VK5)

POWER UNIT, DIESEL ENGINE DRIVEN LIGHT TACTICAL TRAILER MOUNTED,
10 kW, 60 Hz, PU-798A
(NSN: 6115-01-413-3818) (EIC: VNC)
10 kW, 400 Hz, PU-799A
(NSN: 6115-01-413-3819) (EIC: VDW)

POWER PLANT, DIESEL ENGINE DRIVEN 1½ TON TRAILER MOUNTED,
10 kW, 60 Hz, AN/MJQ-37
(NSN: 6115-01-299-6035) (EIC: VK2)
10 kW, 400 Hz, AN/MJQ-38
(NSN: 6115-01-313-4214) (EIC: VK3)

***SUPERSEDURE NOTICE** - This manual supersedes TM 9-6115-660-13&P dated 30 March 2009.

DISTRIBUTION STATEMENT A - Approved for public release; distribution is unlimited.

HEADQUARTERS, DEPARTMENT OF THE ARMY
15 OCTOBER 2010

WARNING SUMMARY

FIRST AID

For First Aid information, refer to FM 4-25.11.

5 SAFETY STEPS TO FOLLOW IF SOMEONE IS THE VICTIM OF ELECTRICAL SHOCK

1. DO NOT TRY TO PULL OR GRAB THE INDIVIDUAL
2. IF POSSIBLE, TURN OFF THE ELECTRICAL POWER
3. IF YOU CANNOT TURN OFF THE ELECTRICAL POWER, PULL, PUSH OR LIFT THE PERSON TO SAFETY USING A DRY WOODEN POLE OR A DRY ROPE OR SOME OTHER INSULATING MATERIAL
4. SEND FOR HELP AS SOON AS POSSIBLE
5. AFTER THE INJURED PERSON IS FREE OF CONTACT WITH THE SOURCE OF ELECTRICAL SHOCK, MOVE THE PERSON A SHORT DISTANCE AWAY AND IMMEDIATELY START ARTIFICIAL RESUSCITATION

WARNING SUMMARY - Continued

WARNING AND CAUTION STATEMENTS

Warning and Caution statements have been strategically placed throughout this text prior to operating procedures, practices, or conditions considered essential to the protection of personnel (WARNING) or equipment and property (CAUTION).

A WARNING or CAUTION will apply each time the related step is repeated. Prior to starting any task the WARNINGs or CAUTIONs included in the text for that task must be reviewed and understood. Refer to the materials list at the beginning of the appropriate manual section for materials used during maintenance of this equipment. This warning summary contains the WARNINGs and CAUTIONs included in the manual. The detailed warnings for hazardous materials only are listed separately in the warning summary as the "Hazardous Materials Warnings" section.

WARNING

All metal jewelry can conduct electricity and become entangled in generator set components. Remove all jewelry when working on generator set. Failure to comply with this warning can cause injury or death to personnel.

WARNING

DO NOT wear loose clothing when performing checks, services and maintenance. Failure to comply with this warning can cause injury or death to personnel.

WARNING

High voltage is produced when this generator set is in operation. Make sure unit or units are completely shut down and free of any power source before attempting any repair or maintenance on the unit, switch box or when connecting or disconnecting load cables. Failure to comply with this warning can cause injury or death to personnel.

WARNING

High voltage is produced when this generator set is in operation. SHUT DOWN generator set and make sure it is free of any power source before attempting any repair or maintenance on the generator, switch box or when connecting or disconnecting load cables. Failure to comply with this warning can cause injury or death to personnel.

WARNING

Shut down generator sets before performing inspection of load cables. Failure to comply with this warning can cause injury or death to personnel.

WARNING

Shut down generator sets before performing inspection of wiring. Failure to comply with this warning can cause injury or death to personnel.

WARNING

High voltage is produced when the generator set is in operation. Never attempt to start the generator set unless it is properly grounded. Failure to comply with this warning can cause injury or death to personnel.

WARNING

Ensure nuts on ground terminals are properly secured creating a good ground. Failure to comply with this warning can cause injury or death to personnel.

WARNING SUMMARY - Continued

WARNING

High voltage is produced when the generator set is in operation. DO NOT touch live voltage connections. Never attempt to connect or disconnect load cables while the generator set is running. Failure to comply with this warning can cause injury or death to personnel.

WARNING

Dangerous voltage exists on live circuits. Always observe precautions and never work alone. Failure to comply with this warning can cause injury or death to personnel.

WARNING

A qualified technician must make the power connections and perform all continuity checks. The power source may be a generator or commercial power. Failure to comply with this warning can cause injury or death to personnel.

WARNING

Shut down generator sets before removing indicator lamp. Failure to comply with this warning can cause injury or death to personnel.

WARNING

Diesel fuel is flammable and toxic to eyes, skin, and respiratory tract. Skin and eye protection are required when working in contact with diesel fuel. Avoid repeated or prolonged contact. Provide adequate ventilation. Operators are to wash exposed skin and change chemical-soaked clothing promptly if exposed to fuel. Failure to comply with this warning can cause injury or death to personnel.

WARNING

Fuels used in the generator set are flammable. Do not smoke or use open flames when performing maintenance. Failure to comply with this warning can cause injury or death to personnel, and damage to the generator set.

WARNING

Fuels used in the generator set are flammable. When filling the fuel tank, maintain metal-to-metal contact between filler nozzle and fuel tank opening to eliminate static electrical discharge. Failure to comply with this warning can cause injury or death to personnel, and damage to the generator set.

WARNING

Hot engine surfaces from the engine and generator circuitry are possible sources of ignition. When hot refueling with DF-1, DF-2, JP5 or JP8, avoid fuel splash and fuel spill. Do not smoke or use open flame when performing refueling. Remember PMCS is still required. Failure to comply with this warning can cause injury or death to personnel, and damage to the generator set.

WARNING

Cooling system operates at high temperature and pressure. Contact with high pressure steam and/or liquids can result in burns and scalding. Shut down generator set, and allow system to cool before performing checks, services and maintenance, or wear gloves and additional protective clothing and goggles as required. Failure to comply with this warning can cause injury or death to personnel.

WARNING

In extreme cold weather, skin can stick to metal. Avoid contacting metal items with bare skin in extreme cold weather. Failure to comply with this warning can cause injury to personnel.

WARNING SUMMARY - Continued

WARNING

Operating the generator set exposes personnel to a high noise level. Hearing protection must be worn when operating or working near the generator set when the generator set is running. Failure to comply with this warning can cause hearing damage to personnel.

WARNING

Exhaust discharge contains deadly gases including carbon monoxide. DO NOT operate generator set in enclosed areas unless exhaust discharge is properly vented outside. Failure to comply with this warning can cause injury or death to personnel.

WARNING

Hot exhaust gases can ignite flammable materials. Allow room for safe discharge of hot gases and sparks. Failure to comply with this warning can cause injury or death to personnel.

WARNING

Top housing panels and exhaust system can get very hot. Shut down generator set, and allow system to cool before performing checks, services and maintenance. Failure to comply with this warning can cause severe burns and injury to personnel.

WARNING

Top housing panels and exhaust system can get very hot. When performing DURING PMCS, wear gloves and additional protective clothing as required. Failure to comply with this warning can cause severe burns and injury to personnel.

WARNING

Exercise extreme caution when performing DURING PMCS checks inside engine compartment. Avoid contact with moving or hot engine parts. Failure to comply with this warning can cause injury or death to personnel.

WARNING

Batteries give off a flammable gas. Do not smoke or use open flame when performing maintenance. Failure to comply with this warning can cause severe personal injury or death and equipment damage.

WARNING

Battery acid can cause burns to unprotected skin. Wear safety goggles and chemical gloves and avoid acid splash while working on the batteries. Failure to comply with this warning can cause severe personal injury.

WARNING

Do not disconnect trailer from towing vehicle before hand brakes are set and front landing leg and rear support leg lowered. Failure to comply with this warning can cause personal injury or death from trailer tipping or rolling, and equipment damage.

WARNING

If trailer is not coupled to towing vehicle, ensure that wheels are securely chocked. Failure to comply with this warning can cause trailer to roll, resulting in severe personal injury and damage to equipment.

WARNING

Before removing trailer leveling-support jack, support rear of trailer with jack stand(s). Failure to comply with this warning can cause severe personal injury or death.

WARNING SUMMARY - Continued

WARNING

Before performing any maintenance that requires climbing on or under trailer, make sure that trailer handbrakes are set, trailer front landing leg/support leg is lowered, and leveling-support jack is lowered. Failure to comply with this warning can cause personal injury or death to personnel from trailer suddenly rolling or tipping.

WARNING

Steel strapping used in packaging of the power plant/power unit has sharp edges. Wear gloves and use care when cutting and handling steel strapping. Failure to comply with this warning can cause personal injury.

WARNING

Use the aid of an assistant when removing the fender, splash guard, and switch box as an assembly. Failure to comply with this warning can cause severe personal injury.

WARNING

When lifting generator set, use lifting equipment with minimum lifting capacity of 1750 pounds (793.8 kg). Do not stand or put arms, legs, or any part of the body under hoisted load. Do not permit generator set to swing. Failure to comply with this warning can result in personal injury or death and damage to equipment.

WARNING

Impact disk must be tightened to end of threads on rod. Also, lockwasher and nut must be tightened firmly against impact disk. Failure to comply with this warning can result in severe personal injury and/or damage to the equipment.

WARNING

Before removing trailer leveling-support jack, support rear of trailer with jack stand(s). Failure to comply with this warning can cause severe personal injury or death.

WARNING

Do not attempt to seat a lockring when tire is inflated. Improperly seated lockring could fly off. Failure to comply can cause severe injury to personnel.

WARNING

Solvent used to clean parts is potentially dangerous to personnel and property. Clean parts in a well-ventilated area. Avoid inhalation of solvent fumes. Wear goggles and rubber gloves to protect eyes and skin. Wash exposed skin thoroughly. Do not smoke or use near open flame or excessive heat. Failure to comply with this warning can cause severe personal injury and/or damage to equipment.

WARNING

Exercise extreme caution when performing DURING PMCS checks inside engine compartment. Avoid contact with moving or hot engine parts. Failure to comply with this warning can cause injury or death to personnel.

LIST OF EFFECTIVE PAGES / WORK PACKAGES

NOTE: This manual supersedes TM 9-6115-660-13&P dated 30 March 2009. Zero in the "Change No." column indicates an original page or work package.

Date of issue for revision is:

Change 15 OCTOBER 2010

TOTAL NUMBER OF PAGES FOR FRONT AND REAR MATTER IS 44 AND TOTAL NUMBER OF WORK PACKAGES IS 105, CONSISTING OF THE FOLLOWING:

Page / WP No.	Change No.	Page / WP No.	Change No.
Front Cover	0	WP 0025 (2 pgs)	0
Blank	0	WP 0026 (2 pgs)	0
Warning summary (**6** pgs)	0	WP 0027 (4 pgs)	0
i - xix	0	WP 0028 (2 pgs)	0
Chp 1 title page	0	WP 0029 (2 pgs)	0
Chp 1 Index	0	WP 0030 (2 pgs)	0
WP 0001 (6 pgs)	0	WP 0031 (2 pgs)	0
WP 0002 (6 pgs)	0	WP 0032 (4 pgs)	0
WP 0003 (2 pgs)	0	WP 0033 (4 pgs)	0
Chp 2 title page	0	WP 0034 (4 pgs)	0
Chp 2 Index	0	WP 0035 (2 pgs)	0
WP 0004 (4 pgs)	0	WP 0036 (8 pgs)	0
WP 0005 (26 pgs)	0	WP 0037 (4 pgs)	0
WP 0006 (2 pgs)	0	WP 0038 (6 pgs)	0
Chp 3 title page	0	WP 0039 (4 pgs)	0
Chp 3 Index	0	WP 0040 (4 pgs)	0
WP 0007 (2 pgs)	0	WP 0041 (4 pgs)	0
WP 0008 (6 pgs)	0	WP 0042 (4 pgs)	0
Chp 4 title page	0	WP 0043 (4 pgs)	0
Chp 4 Index	0	WP 0044 (6 pgs)	0
WP 0009 (6 pgs)	0	WP 0045 (2 pgs)	0
WP 0010 (16 pgs)	0	WP 0046 (2 pgs)	0
WP 0011 (4 pgs)	0	WP 0047 (4 pgs)	0
Chp 5 title page	0	WP 0048 (2 pgs)	0
Chp 5 Index	0	WP 0049 (2 pgs)	0
WP 0012 (2 pgs)	0	WP 0050 (2 pgs)	0
WP 0013 (1 0 pgs)	0	WP 0051 (2 pgs)	0
Chp 6 title page	0	WP 0052 (2 pgs)	0
Chp 6 Index	0	WP 0053 (4 pgs)	0
WP 0014 (6 pgs)	0	WP 0054 (2 pgs)	0
WP 0015 (4 pgs)	0	WP 0055 (2 pgs)	0
WP 0016 (4 pgs)	0	WP 0056 (2 pgs)	0
WP 0017 (2 pgs)	0	WP 0057 (2 pgs)	0
WP 0018 (8 pgs)	0	WP 0058 (4 pgs)	0
WP 0019 (4 pgs)	0	WP 0059 (2 pgs)	0
WP 0020 (4 pgs)	0	WP 0060 (2 pgs)	0
WP 0021 (4 pgs)	0	WP 0061 (2 pgs)	0
WP 0022 (4 pgs)	0	WP 0062 (2 pgs)	0
WP 0023 (4 pgs)	0	WP 0063 (2 pgs)	0
WP 0024 (4 pgs)	0	Chp 7 title page	0

LIST OF EFFECTIVE PAGES / WORK PACKAGES - CONTINUED

Page / WP No.	Change No.
Chp 7 Index	0
WP 0064 (6 pgs)	0
WP 0065 (4 pgs)	0
WP 0066 (4 pgs)	0
WP 0067 (4 pgs)	0
WP 0068 (4 pgs)	0
WP 0069 (4 pgs)	0
WP 0070 (4 pgs)	0
WP 0071 (4 pgs)	0
WP 0072 (4 pgs)	0
WP 0073 (4 pgs)	0
WP 0074 (4 pgs)	0
WP 0075 (4 pgs)	0
WP 0076 (4 pgs)	0
WP 0077 (4 pgs)	0
WP 0078 (4 pgs)	0
WP 0079 (4 pgs)	0
WP 0080 (4 pgs)	0
WP 0081 (4 pgs)	0
WP 0082 (4 pgs)	0
WP 0083 (4 pgs)	0
WP 0084 (4 pgs)	0
WP 0085 (4 pgs)	0
WP 0086 (4 pgs)	0
WP 0087 (4 pgs)	0
WP 0088 (4 pgs)	0
WP 0089 (4 pgs)	0
WP 0090 (4 pgs)	0
WP 0091 (4 pgs)	0
WP 0092 (4 pgs)	0
WP 0093 (4 pgs)	0
WP 0094 (4 pgs)	0
WP 0095 (2 pgs)	0
WP 0096 (2 pgs)	0
WP 0097 (4 pgs)	0
WP 0098 (6 pgs)	0
Chp 8 title page	0
Chp 8 Index	0
WP 0099 (2 pgs)	0
WP 0100 (4 pgs)	0
WP 0101 (4 pgs)	0
WP 0102 (6 pgs)	0
WP 0103 (2 pgs)	0
WP 0104 (2 pgs)	0
WP 0105 (2 pgs)	0
INDEX-1 - INDEX-4	0
FP-1	0
FP-2 Blank	0
FP-3	0
FP-4 Blank	0
Inside back cover	0
Back cover	0

HEADQUARTERS,
DEPARTMENT OF THE ARMY
WASHINGTON, D.C., 15 OCTOBER 2010

TECHNICAL MANUAL

OPERATOR AND FIELD MAINTENANCE MANUAL INCLUDING REPAIR PARTS AND SPECIAL TOOLS LIST

FOR

POWER UNIT, DIESEL ENGINE DRIVEN, 1 TON TRAILER MOUNTED,
10 kW, 60 Hz, PU-798
(NSN: 6115-01-319-9032) (EIC: VK5)
10 kW, 400 Hz, PU-799
(NSN: 6115-01-313-4283) (EIC: VK5)

POWER UNIT, DIESEL ENGINE DRIVEN LIGHT TACTICAL TRAILER MOUNTED,
10 kW, 60 Hz, PU-798A
(NSN: 6115-01-413-3818) (EIC: VNC)
10 kW, 400 Hz, PU-799A
(NSN: 6115-01-413-3819) (EIC: VDW)

POWER PLANT, DIESEL ENGINE DRIVEN 1½ TON TRAILER MOUNTED,
10 kW, 60 Hz, AN/MJQ-37
(NSN: 6115-01-299-6035) (EIC: VK2)
10 kW, 400 Hz, AN/MJQ-38
(NSN: 6115-01-313-4214) (EIC: VK3)

REPORTING ERRORS AND RECOMMENDING IMPROVEMENTS

You can help improve this manual. If you find any mistakes, or if you know of a way to improve the procedures, please let us know. Reports, as applicable by the requiring Service, should be submitted as follows:

(A) Army - Mail your letter or DA Form 2028 (Recommended Changes to Publications and Blank Forms) located in the back of this manual, directly to: Commander, U.S. Army CECOM Life Cycle Management Command (LCMC) and Fort Monmouth, ATTN: AMSEL-LCL-ECM, Fort Monmouth, NJ 07703-5006. You may also send in your recommended changes via electronic mail or by fax. Our fax number is 732-532-1556, DSN 992-1556. Our e-mail address is MONM-AMSELLEOPUBSCHG@conus.army.mil. Our online web address for entering and submitting DA Form 2028s is http://edm.monmouth.army.mil/pubs/2028.html.

A reply will be furnished to you.

***SUPERSEDURE NOTICE** - This manual supersedes TM 9-6115-660-13&P dated 30 March 2009.

TABLE OF CONTENTS

Page No.
WP Sequence No.

TABLE OF CONTENTS - Continued

TABLE OF CONTENTS - Continued

TABLE OF CONTENTS - Continued

TABLE OF CONTENTS - Continued

Page No.
WP Sequence No.

TABLE OF CONTENTS - Continued

TABLE OF CONTENTS - Continued

Page No.
WP Sequence No.

TABLE OF CONTENTS - Continued

TABLE OF CONTENTS - Continued

TABLE OF CONTENTS - Continued

TABLE OF CONTENTS - Continued

TABLE OF CONTENTS - Continued

TABLE OF CONTENTS - Continued

How to Use This Manual

DESCRIPTION OF THE MANUAL

Manual Overview

This manual is designed to help the user operate and maintain the 10 kW Power Units PU-798, PU-798A, PU-799, and PU-799A, and Power Plants AN/MJQ-37, AN/MJQ-38. Listed below are some of the features included in this manual to help locate and use the provided information.

A List of Effective Pages is included to help the user easily identify the latest information that is included in this manual.

A Table of Contents is provided as a quick reference to the chapters and paragraphs that will be used often.

Warnings, cautions, notes, and subject headings, as well as other essential information, are printed in bold type to make them easier to see.

This manual contains exploded view illustrations that will assist the user with initial setup, assembly, and disassembly procedures.

The General Information work packages provide the user with the description, characteristics, and theory of operation of the 10 kW Power Units PU-798, PU-798A, PU-799, and PU-799A, and Power Plants AN/MJQ-37, AN/MJQ-38 and its major components along with configuration instructions.

The Operating Instructions work packages provide operational information with specific deployment and retrieval instructions.

The Maintenance Instructions work packages describe maintenance and repair procedures and gives maintenance instructions.

The Supporting Information work packages provide the user with: Identifying references, a Maintenance Allocation Chart (MAC), a Component of End Items list (COEI), a Basic Issue Items list (BII), an Additional Authorization List (AAL), and an Expendable and Durable Items List.

This manual is prepared in functionally divided individual task packages (work packages (WP)) in the logical order of work sequence. Work packages may contain a scope of tasks, initial setups, and descriptive information, operating tasks and maintenance tasks. These data types are further divided into paragraphs, procedural steps, tables, listings, warnings, cautions and notes, and supporting illustrations.

The WPs are stand alone general information, operating, maintenance and supporting information units containing all information required for directing task performance.

Work Packages are numbered using 4 digits starting with 0001 (e.g., work package 1). Inserted work packages are indicated by a decimal point and a number. For example, 0001.1 for the first work package inserted between work package 0001 and work package 0002. This permits adding one or more WPs between any two existing WPs during any revision cycle.

Page numbers within each work package are indicated by -1, -2, -3 (e.g., 0001-1, (work package 1, page 1)).

This manual includes Repair Parts and Special Tools Lists (RPSTL) information. This information is in the Parts Information chapter.

Warnings, Cautions and Notes Definitions

The following definitions apply to WARNINGS, CAUTIONS and NOTES found throughout this publication. Warning, cautions and notes provide supplemental information. Personnel must understand and apply these Warnings, Cautions and Notes during many phases of operation and maintenance to ensure personnel safety and health and the protection of property. Portions of this information may be repeated in certain chapters of this publication for emphasis.

WARNING

A warning identifies a clear danger to the person doing that procedure.

CAUTION

A caution identifies risk of damage to the equipment.

NOTE

A note highlights essential procedures, conditions, or statements or conveys important instructional data to the user.

Chapter 1 - General Information, Equipment Description and Theory of Operation

Chapter 1 provides an introduction to the power units and power plants. It is divided into three sections, as follows:

General Information. This section provides general information about this manual and the related forms and records. Instructions are provided for making equipment improvement recommendations. Coverage includes a reference to the TM that contains instructions on destruction of materiel to prevent enemy use. Also, a nomenclature cross-reference list is provided.

Equipment Description and Data. This work package describes power unit and power plant capabilities, characteristics, and features. It provides basic equipment data and shows the locations of major power unit and power plant components. Descriptions of the major components are also provided.

Theory of Operation. This work package provides functional descriptions of the power units and power plants.

Chapter 2 - Operator Instructions

Chapter 2 provides instructions for operating the power units and power plants. The chapter is divided into three work packages, as follows:

Description and Use of Operator Controls and Indicators. This work package provides references to the applicable generator set technical manuals and trailer technical manuals. Those references contain information on operator's controls and indicators for the generator sets and trailers. Detailed coverage is provided for the power plant switch box controls and indicators.

Operation Under Usual Conditions. This work package contains instructions for preparing the power units and power plants for use and operating them under normal conditions. Coverage includes instructions for connecting power plant load to the switch box and operating the switch box. Instructions for connecting power unit load to the generator set are also covered. This section also covers preparation of the power units or power plants for movement to a new worksite.

Operation Under Unusual Conditions. Provides references to the applicable generator set and trailer technical manuals.

Chapter 3 - Operator Troubleshooting Procedures

Chapter 3 covers troubleshooting procedures of the power units and power plants to be performed by the operator. The chapter is divided as follows:

Operator Troubleshooting Index. This work package provides a troubleshooting introduction and malfunction/symptom index to direct you to the appropriate troubleshooting procedure at the operator level.

Operator Troubleshooting Procedures. This work package provides troubleshooting procedures and corrective actions that are to be performed by the operator. It also provides references to the applicable generator set and trailer technical manuals.

Chapter 4 - Operator Maintenance Instructions

Chapter 4 covers maintenance of the power units and power plants to be performed by the operator. Its purpose is to provide you with the information that you need to keep the equipment in good operating condition. The chapter is divided as follows:

Operator PMCS Introduction. This work package provides a detailed explanation of each table entry in the PMCS table along with applicable warnings, cautions and notes prior to starting on the PMCS procedures.

Operator PMCS, Including Lubrication Instructions. This work package contains detailed instructions that the operator must perform before, during, and after preventive maintenance checks and services. Coverage includes all operator PMCS for the generator sets and trailers that make up the power units and power plants. Operator PMCS for the switch box used on the power plants is also covered. This work package also provides references to the applicable lubrication instructions.

Operator Maintenance Procedures. These work packages refer the operator to the preventive maintenance checks and services required by WP 0010.

Chapter 5 - Field Troubleshooting Procedures

Chapter 5 covers troubleshooting procedures of the power units and power plants to be performed by the operator. The chapter is divided as follows:

Field Troubleshooting Index. This work package provides a troubleshooting introduction and malfunction/symptom index to direct you to the appropriate troubleshooting procedure at the field maintenance level.

Field Troubleshooting Procedures. This work package covers troubleshooting procedures and corrective actions that are to be performed at the field maintenance level.

Chapter 6 - Field Maintenance

Chapter 6 provides instructions covering the power units and power plants maintenance that must be performed at field level. The chapter is divided as follows:

Service Upon Receipt. This work package contains instructions for inspecting and servicing each power unit and power plant when it is received. It includes instructions for unpacking the equipment when it is received. The instructions include unpacking and stowing the basic issue items that accompany the power unit or power plant. Also included are instructions on positioning the power units or power plants for operation and connecting an external fuel source.

Field PMCS Introduction. This work package provides a detailed explanation of each table entry in the PMCS table along with applicable warnings, cautions and notes prior to starting on the PMCS procedures.

Field PMCS, Including Lubrication Instructions. This work package contains instructions covering the PMCS that must be performed at the field maintenance level. A table provides information on maintenance intervals and actions required. This work package also lists the applicable references that contain lubrication instructions for the generator sets and trailers. It contains specific lubrication instructions for the power unit or power plant components not covered in the generator set and trailer references.

Field Maintenance Procedures. These work packages list the applicable references that cover field maintenance of the generator sets and trailers. It also contains detailed instructions on field level maintenance of the power unit and power plant components not covered in the generator set and trailer references.

Preparation for Storage and Shipment. This work package provides information on short-term, intermediate-term, and long-term storage.

Illustrated List of Manufactured Items. These work packages provide instructions for making the items authorized to be manufactured or fabricated at the field maintenance level.

Torque Limits. This work package lists standard torque values for bolts and screws used in the power units and power plants.

Chapter 7 - Parts Information

This chapter contains Repair Parts and Special Tools Lists (RPSTL) needed to perform operator and field maintenance of the power units and power plant. The chapter is divided as follows:

Repair Parts and Special Tools List (RPSTL) Introduction. This work package explains what is covered in repair parts list.

Repair Parts List. These work packages contain illustrations and lists. The illustrations aid in identifying the parts. The lists include information that tells which maintenance levels are authorized to use the part, the part number that identifies the part, the name of the part, and the quantity used.

Special Tools List. This work package informs the user that no special tools are needed.

National Stock Number (NSN) Index. This work package lists all of the parts contained in Repair Parts Lists. The NSN index is in National Item Identification Number (NIIN) sequence.

Part Number Index. These work packages lists all of the parts contained in Repair Parts Lists. The part number index is in alphanumeric part number sequence.

Chapter 8 - Supporting Information

The chapter is divided as follows:

References. This work package lists all publications referenced in the various chapters of the technical manual. The listing includes the title and document number of each publication.

Maintenance Allocation Chart (MAC) Introduction. This work package explains what is covered in the maintenance allocation chart.

Maintenance Allocation Chart (MAC). This work package has three sections, as follows:

Maintenance Allocation Chart (MAC). Table 1 contains a tabular listing that assigns maintenance functions to specific maintenance levels. It lists the work time needed to perform each maintenance function at the assigned level. It also contains a column that has entries keyed to the tools and equipment listed in Table 2. Another column has entries keyed to the remarks in Table 3.

Tool and Test Equipment Requirements. Table 2 contains complete identification information for the items referenced in the tools and equipment column of Table 1.

Remarks. Table 3 provides additional information for each entry in the remarks column of Table 2.

Components of End Item (COEI) and Basic Issue Items (BII) Lists. This work package lists the items usually packaged separately but needed for installation and operation of the power units and power plants. The work package has three sections, as follows:

Introduction. This section explains the entries in Tables 1 and 2.

Components of End Item. The power units and power plants are normally shipped fully assembled, so this section is not applicable.

Basic Issue Items. This section contains a list of the accessories needed for installation and operation of the power units and power plants.

Additional Authorization List (AAL). This work package lists additional items you are authorized for support of the power units and power plants. This work package contains two sections, as follows:

Introduction. This section explains the entries in Tables 1.

Additional Authorized Items List. This table lists the Additional Authorized Items.

Expendable and Durable Items List. This work package lists expendable/durable supplies and materials needed to operate and maintain the power units and power plants. The work package contains two sections, as follows:

Introduction. This section explains the entries in Tables 1.

Expendable and Durable Items List. The list indicates the maintenance level that needs each item and identifies the items by National Stock Number (NSN), description, and unit of measure.

Rear Matter

Alphabetical Index. An alphabetical index at the back of this technical manual provides a listing of subjects covered, cross-referenced to the applicable work packages.

HOW TO FIX A POWER UNIT OR POWER PLANT MALFUNCTION

Determining the Cause

Finding the cause of a malfunction, troubleshooting, is the first step in fixing the power unit or power plant and returning it to operation. Follow these simple steps to determine the root of the problem:

1. Turn to the Table of Contents in this manual (page ii).
2. Locate "Troubleshooting" under the chapter that covers your level of maintenance. Turn to the page indicated.
3. For operator troubleshooting, follow the instructions in the references listed in Chapter 3.
4. For troubleshooting at the field maintenance level, find the malfunction listing in the troubleshooting symptom index. Follow the instructions in the figure (troubleshooting chart) indicated by the symptom index.

Preparing for a Task

Be sure that you understand the entire maintenance procedure before beginning any maintenance task. Make sure that all parts, materials, and tools are handy. Read all steps before beginning. Prepare to do the task as follows:

1. Carefully read the entire task before starting. It tells you what you will need and what you have to know to start the task. DO NOT START THE TASK UNTIL:
   a. You know what is needed
   b. You have everything you need
   c. You understand what to do
2. If parts are listed, they can be drawn from technical supply. Before you start the task, check to make sure you can get the needed parts. National stock numbers (NSNs) and part numbers for generator set parts are listed in the generator Repair Parts and Special Tools List (RPSTL) manual, TM 9-6115- 642-24P, and the engine RPSTL manual, TM 9-2815-253-24P. NSNs and part numbers for the 1½ ton trailer chassis parts are listed in TM 9-2330-213-14&P. NSNs and part numbers for the next higher assembly (the power unit or power plant, less generator set(s) and trailer chassis) are listed in Chapter 7.
3. If expendable/durable supplies or materials are needed, get them before starting the task. Refer to WP 0104 for the correct nomenclature and NSN.

How to Do the Task

The following are standard maintenance practices. Instructions about these practices are usually not included in task steps. When standard maintenance practices do not apply, the task steps will tell you. The standard maintenance practices are:

1. PAY ATTENTION TO WARNINGS, CAUTIONS, AND NOTES.
2. Use the List of Abbreviations/Acronyms if you do not understand the special abbreviations or unusual terms used in this manual.
3. The following are standard maintenance practices. Instructions about these practices are usually not included in task steps. When standard maintenance practices do not apply, the task steps will tell you. The standard maintenance practices are:
   a. Tag electrical wiring before disconnecting it.
   b. Discard used preformed packing, retainers, gaskets, cotter pins, lockwashers, and similar items. Install new parts to replace the discarded items.
   c. Coat packing before installation, in accordance with the task instructions.
   d. Disassembly procedures describe the disassembly needed for total authorized repair. You may not need to disassemble an item as far as described in the task. Follow the disassembly steps only as far as needed to repair/replace worn or damaged parts.
   e. Clean the assembly, subassembly, or part before inspecting it.
   f. Before installing components having mating surfaces, inspect the mating surfaces to make sure they are in serviceable condition.
   g. Hold the bolt (or screw) head with a wrench (or screwdriver) while tightening or loosening a nut on the bolt (or screw).
   h. Torque to the special torque cited when the task instructions include the words "torque to." Use standard torques at all other times.
   i. When a cotter pin is required, align the cotter pin holes within the allowable torque range.
   j. Inspect for foreign objects after performing maintenance.

CHAPTER 1

OPERATOR AND FIELD GENERAL INFORMATION, EQUIPMENT DESCRIPTION AND THEORY OF OPERATION

FOR

10 kW 60 AND 400 Hz TRAILER-MOUNTED POWER UNITS AND POWER PLANTS

CHAPTER 1

GENERAL INFORMATION, EQUIPMENT DESCRIPTION AND THEORY OF OPERATION

WORK PACKAGE INDEX

OPERATOR AND FIELD MAINTENANCE

10 kW 60 AND 400 Hz TRAILER-MOUNTED POWER UNITS AND POWER PLANTS

GENERAL INFORMATION

SCOPE

This manual is for your use in operating and maintaining the Power Plants; AN/MJQ-37 and AN/MJQ-38 (Figure 1); and Power Units, PU-798 and PU-799 (Figure 2); and Power Units, PU-798A and PU-799A (Figure 3). The manual covers operating instructions and operator and field maintenance requirements for the power plants and power units. It also contains a Repair Parts and Special Tools List (RPSTL) for the power plants and power units. The power plants and power units are mobile. The power plants and power units may be used to supply electric power to any system or equipment requiring up to 10 kW of 60 Hz or 400 Hz power.

MAINTENANCE FORMS, RECORDS, AND REPORTS

Department of the Army forms and procedures used for equipment maintenance will be those prescribed by (as applicable) DA PAM 750-8, The Army Maintenance Management System (TAMMS) Users Manual; DA PAM 738-751, Functional Users Manual for the Army Maintenance Management Systems - Aviation (TAMMS-A); or AR 700-138, Army Logistics Readiness and Sustainability.

REPORTING EQUIPMENT IMPROVEMENT RECOMMENDATION (EIR)

If your power plant or power unit needs improvement, let us know. Send us an EIR. You, the user, are the only one who can tell us what you don't like about your equipment. Let us know why you don't like the design or performance. If you have Internet access, the easiest and fastest way to report problems or suggestions is to go to https://aeps.ria.army.mil/aepspublic.cfm (scroll down and choose the "Submit Quality Deficiency Report" bar). The Internet form lets you choose to submit an Equipment Improvement Recommendation (EIR), a Product Quality Deficiency Report (PQDR or a Warranty Claim Action (WCA). You may also submit your information using an SF 368 (Product Quality Deficiency Report). You can send your SF 368 via e-mail, regular mail, or facsimile using the addresses/facsimile numbers specified in DA PAM 750-8, The Army Maintenance Management System (TAMMS) Users Manual. We will send you a reply.

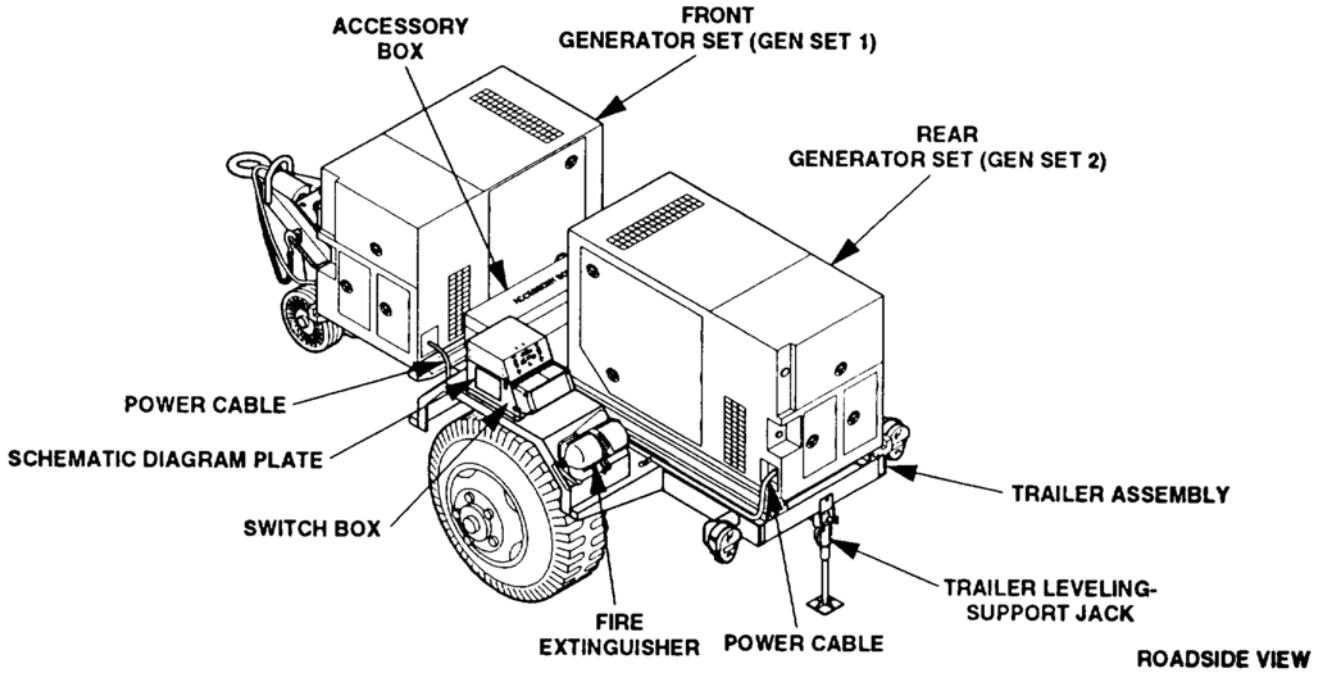

Figure 1. Features of AN/MJQ-37 and AN/MJQ-38 (Mounted on M103A3 Trailer).

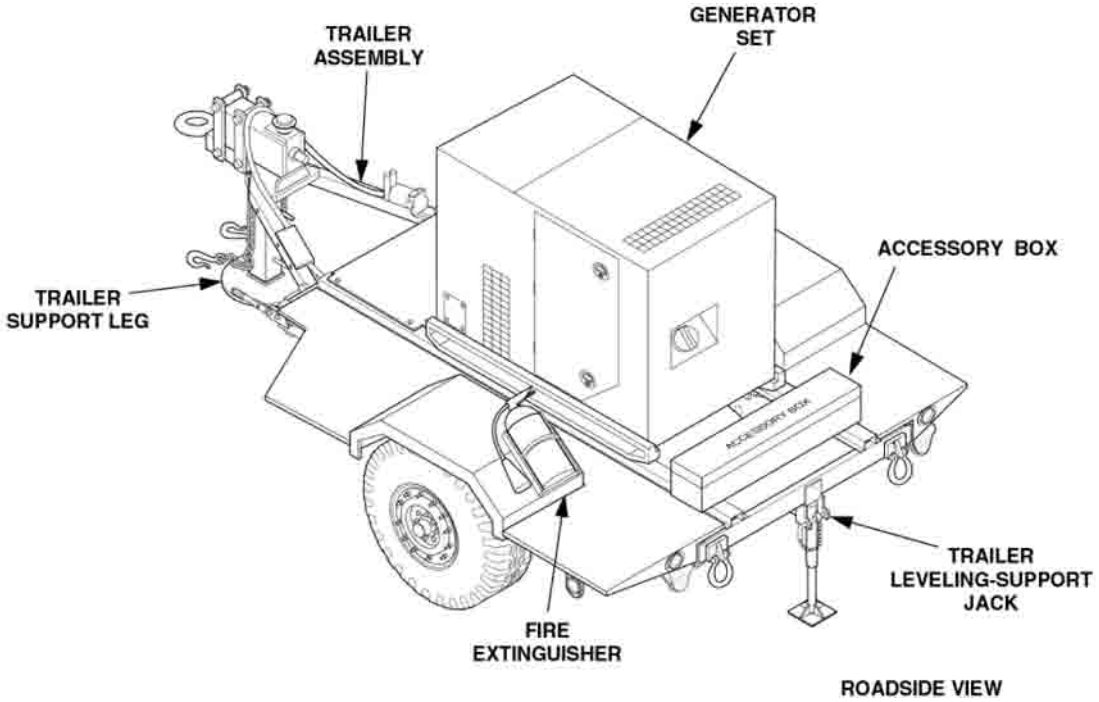

Figure 2. Features of PU-798 and PU-799 (Mounted on M116A3 Trailer).

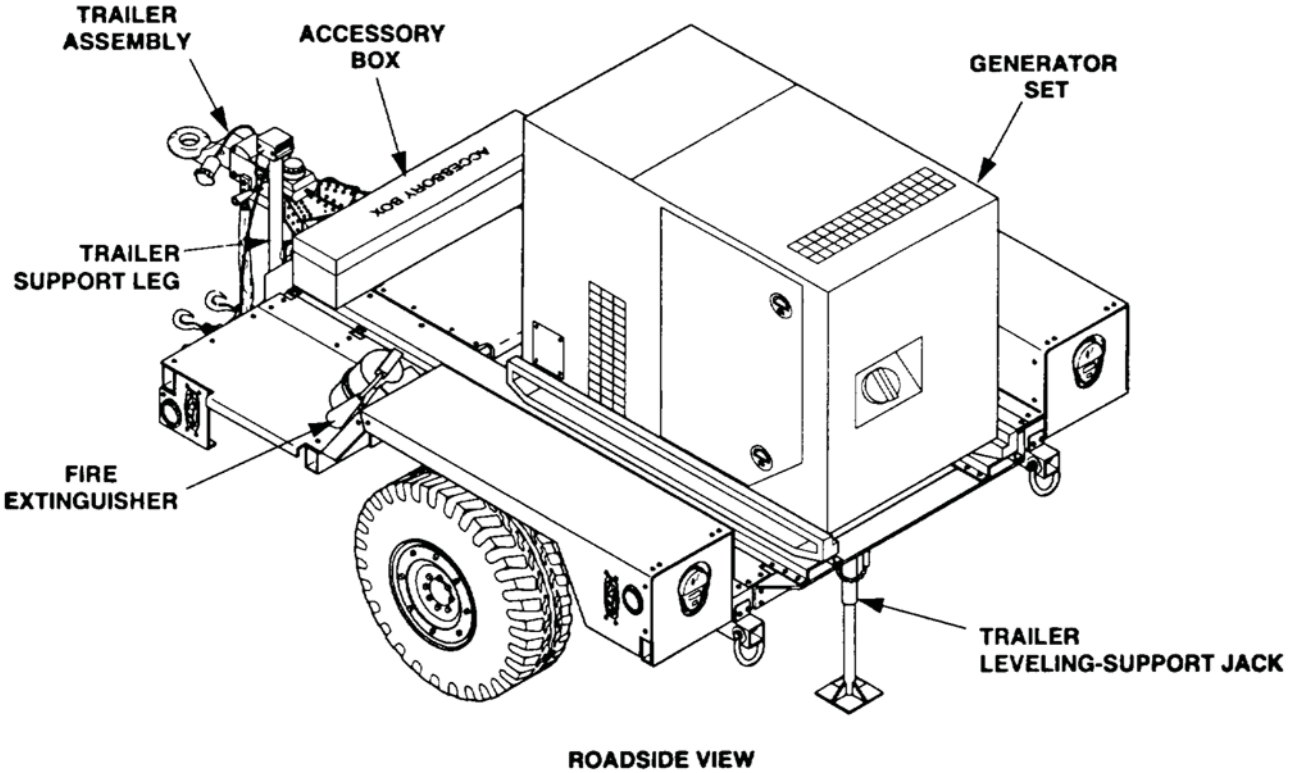

Figure 3. Features of PU-798A and PU-799A (Mounted on Light Tactical Trailer [LTT]).

CORROSION PREVENTION AND CONTROL (CPC)

Corrosion Prevention and Control (CPC) of Army materiel is a continuing concern. It is important that any corrosion problems with this item be reported so that the problem can be corrected and improvements can be made to prevent the problem in future items.

Corrosion specifically occurs with metals. It is an electrochemical process that causes the degradation of metals. It is commonly caused by exposure to moisture, acids, bases, or salts. An example is the rusting of iron. Corrosion damage in metals can be seen, depending on the metal, as tarnishing, pitting, fogging, surface residue, and/or cracking.

Plastics, composites, and rubbers can also degrade. Degradation is caused by thermal (heat), oxidation (oxygen), solvation (solvents), or photolytic (light, typically UV) processes. The most common exposures are excessive heat or light. Damage from these processes will appear as cracking, softening, swelling, and/or breaking.

SF Form 368, Product Quality Deficiency Report should be submitted to the address specified in DA PAM 750-8, The Army Maintenance Management System (TAMMS) Users Manual.

DESTRUCTION OF ARMY MATERIEL TO PREVENT ENEMY USE

Destruction of Army materiel to prevent enemy use shall be in accordance with TM 750-244-3.

PREPARATION FOR STORAGE OR SHIPMENT

Refer to WP 0054.

NOMENCLATURE CROSS-REFERENCE LIST

Refer to the list below for nomenclature cross-reference list.

Common Name	Official Nomenclature
AN/MJQ-37	Power Plant, Diesel Engine Driven, 1½ Ton Trailer Mounted, 10 kW, 60 Hz
AN/MJQ-38	Power Plant, Diesel Engine Driven, 1½ Ton Trailer Mounted, 10 kW, 400 Hz
PU-798	Power Unit, Diesel Engine Driven, 1 Ton Trailer Mounted, 10 kW, 60 Hz
PU-799	Power Unit, Diesel Engine Driven, 1 Ton Trailer Mounted, 10 kW, 400 Hz
PU-798A	Power Unit, Diesel Engine Driven, Light Tactical Trailer Mounted, 10 kW, 60 Hz
PU-799A	Power Unit, Diesel Engine Driven, Light Tactical Trailer Mounted, 10 kW, 400 Hz
MEP-803A	Generator Set, 10 kW, 60 Hz
MEP-813A	Generator Set, 10 kW, 400 Hz
M103A3	Chassis, Trailer: 1½ Ton, 2 Wheel (altered)
M116A3	Chassis, Trailer: 1½ Ton, 2 Wheel (altered)
LTT	Chassis, Trailer: Light Tactical, 2 Wheel (altered)

LIST OF ABBREVIATIONS/ACRONYMS

Abbreviation/Acronym	Name
°C	Degrees Celsius
°F	Degrees Fahrenheit
AAL	Additional Authorization List
BII	Basic Issue Item
BOI	Basis Of Issue

LIST OF ABBREVIATIONS/ACRONYMS - Continued

Abbreviation/Acronym	Name
CAGE	Commercial And Government Entity
CAGEC	Commercial And Government Entity Code
COEI	Components Of End Item
Conex	Container Express
CPC	Corrosion Prevention and Control
CTA	Common Table of Allowance
CUCV	Commercial Utility Cargo Vehicle
DOD	Department Of Defense
EIR	Equipment Improvement Recommendation
ft•lbf	Foot Pound-Force
HMMWV	High Mobility Multipurpose Wheeled Vehicle
HMT	High Mobility Trailer
Hz	Hertz
JTA	Joint Table of Allowances
kg	Kilogram
kPa	Kilopascals
kph	Kilometers Per Hour
kW	Kilowatt
m	Meter (Metric Measure)
MAC	Maintenance Allocation Chart
MTOE	Modification Table of Organization and Equipment
N•m	Newton Meter
NIIN	National Item Identification Number
NSNs	National Stock Numbers
PMCS	Preventive Maintenance Checks and Services
PPR	Permissive Paralleling Relay
RPSTL	Repair Parts and Special Tools List
SMR	Source, Maintenance, and Recoverability
TAMMS	The Army Maintenance Management System
TDA	Table of Distribution and Allowances
TMDE	Test, Measurement, and Diagnostic Equipment
UOC	Usable On Code

Common Abbreviations

The common abbreviations used in this manual are in accordance with MIL-STD-12D.

SUPPORTING INFORMATION FOR REPAIR PARTS, SPECIAL TOOLS, TMDE AND SUPPORT EQUIPMENT

Common Tools and Equipment

For authorized common tools and equipment, refer to the Modified Table of Organization and Equipment (MTOE), CTA 50-970, Expendable/Durable Items (Except: Medical, Class V, Repair Parts, and Heraldic Items), CTA 50-909, Field and Garrison Furnishings and Equipment or CTA 8-100, Army Medical Department Expendable/Durable Items, as applicable to your unit.

Special Tools, TMDE, and Support Equipment

Refer to generator set TM 9-6115-642-24P, engine TM 9-2815-253-24P, 1 ton trailer (M116A3) TM 9-2330-202-14&P, LIGHT TACTICAL trailer (LTT) TM 9-2330-392-14&P, and 1½ ton trailer (M103A3) TM 9-2330-213-14&P.

Repair Parts

Generator Set Repair Parts. Refer to generator set TM 9-6115-642-24P and engine TM 9-2815-253-24P.

Trailer Repair Parts. Refer to TM 9-2330-202-14&P for Power Units PU-798 and PU-799, and TM 9-2330-392-14&P for Power Plants PU-798A and PU-799A, and TM 9-2330-213-14&P for Power Plants AN/MJQ-37 and AN/MJQ-38.

Power Plant/Power Unit Repair Parts. Power Plant/Power Unit repair parts not covered in the generator, engine, or trailer are listed and illustrated in parts information work packages 0064 through 0095 of this manual.

END OF WORK PACKAGE

OPERATOR AND FIELD MAINTENANCE

10 kW 60 AND 400 Hz TRAILER-MOUNTED POWER UNITS AND POWER PLANTS

EQUIPMENT DESCRIPTION AND DATA

EQUIPMENT CHARACTERISTICS, CAPABILITIES, AND FEATURES

Characteristics

The power plants and power units consist of one or two DOD Model MEP-803A or Model MEP-813A Tactical Quiet Generator Sets mounted on modified M116A3, 1 ton, M103A3, 1½ ton, or Light Tactical Trailers (LTT). Refer to TM 9-2330-202-14&P for detailed equipment characteristics about the M116A3, TM 9-2330-213-14&P for information about the M103A3, or TM 9-2330-392-14&P for equipment characteristics of the LTT. The modifications to the trailers include generator mounting rails, special lifting rings, special fenders, accessory box, fire extinguisher brackets, and rear leveling support jack. Each generator set is a liquid-cooled, diesel engine driven unit, operating at 60 or 400 Hz with a load capacity of 10 kW. Refer to TM 9-6115-642-10 for detailed equipment characteristics about the generator set.

Power Plants AN/MJQ-37 and AN/MJQ-38. Each of these power plants has two generator sets and a switch box mounted on a modified 1½ ton trailer, M103A3.

Power Units PU-798 and PU-799. Each of these power plants has two generator sets and a switch box mounted on a modified 1 ton trailer, M116A3.

Power Units PU-798A and PU-799A. Each of these power units has one generator set mounted on a Light Tactical Trailer (LTT) trailer.

Capabilities and Features

Power Plant AN/MJQ-37.	
TOWING VEHICLE	2½ Ton 6X6 or 5 Ton 6X6
TIRE PRESSURE (Highway)	35 psi (241.3 kPa)
ELECTRICAL OUTPUT - 60 Hz:	
120 volts, single phase, 2 wire	104 amps
120/240 volts, single phase, 3 wire	52 amps
120/208 volts, three phase, 4 wire	34 amps
Power Plant AN/MJQ-38.	
TOWING VEHICLE	2½ Ton 6X6 or 5 Ton 6X6
TIRE PRESSURE (Highway)	35 psi (241.3 kPa)
ELECTRICAL OUTPUT - 400 Hz:	
120 volts, single phase, 2 wire	104 amps
120/240 volts, single phase, 3 wire	52 amps
120/208 volts, three phase, 4 wire	34 amps
Power Units PU-798 and PU-798A.	
TOWING VEHICLE	
PU-798	CUCV or HMMWV
PU-798A	HMMWV
TIRE PRESSURE (Highway)	35 psi (241.3 kPa)
ELECTRICAL OUTPUT - 60 Hz:	
120 volts, single phase, 2 wire	104 amps
120/240 volts, single phase, 3 wire	52 amps

120/208 volts, three phase, 4 wire	34 amps
Power Units PU-799 and PU-799A.	
TOWING VEHICLE	
PU-799	CUCV or HMMWV
PU-799A	HMMWV
TIRE PRESSURE (Highway)	35 psi (241.3 kPa)
ELECTRICAL OUTPUT - 400 Hz:	
120 volts, single phase, 2 wire	104 amps
120/240 volts, single phase, 3 wire	52 amps
120/208 volts, three phase, 4 wire	34 amps

LOCATION AND DESCRIPTION OF MAJOR COMPONENTS

Refer to Figures 1 and 2, and Tables 1 and 2.

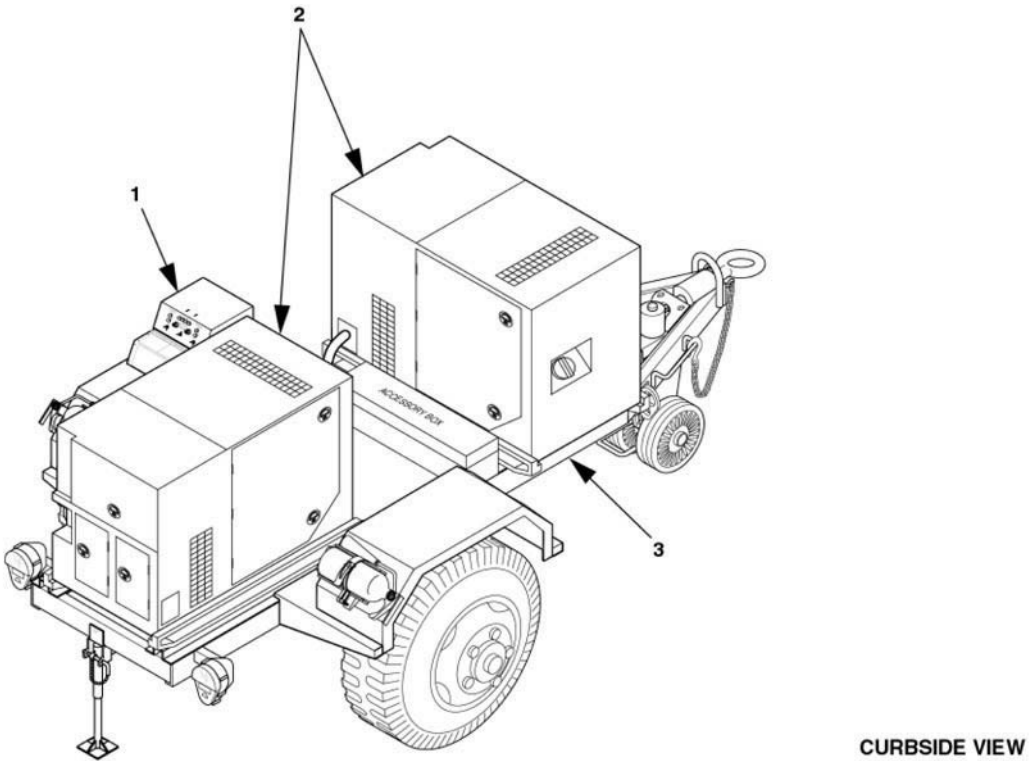

Figure 1. Location of Major Components, AN/MJQ- 37 and AN/MJQ-38.

Table 1. Description of Major Components, AN/MJQ-37 and AN/MJQ-38.

Item No.	Item Name	Description
1	SWITCH BOX	Connects output of generator set to the load, and permits switching between generators without power loss.
2	GENERATOR SETS	Supplies power to the load. Refer to TM 9-6115-642-10 for major components of generator set.

Table 1. Description of Major Components, AN/MJQ-37 and AN/MJQ-38. - Continued

Item No.	Item Name	Description
3	TRAILER ASSEMBLY	Provides support and mounting for switch box, generator sets, and accessory box.

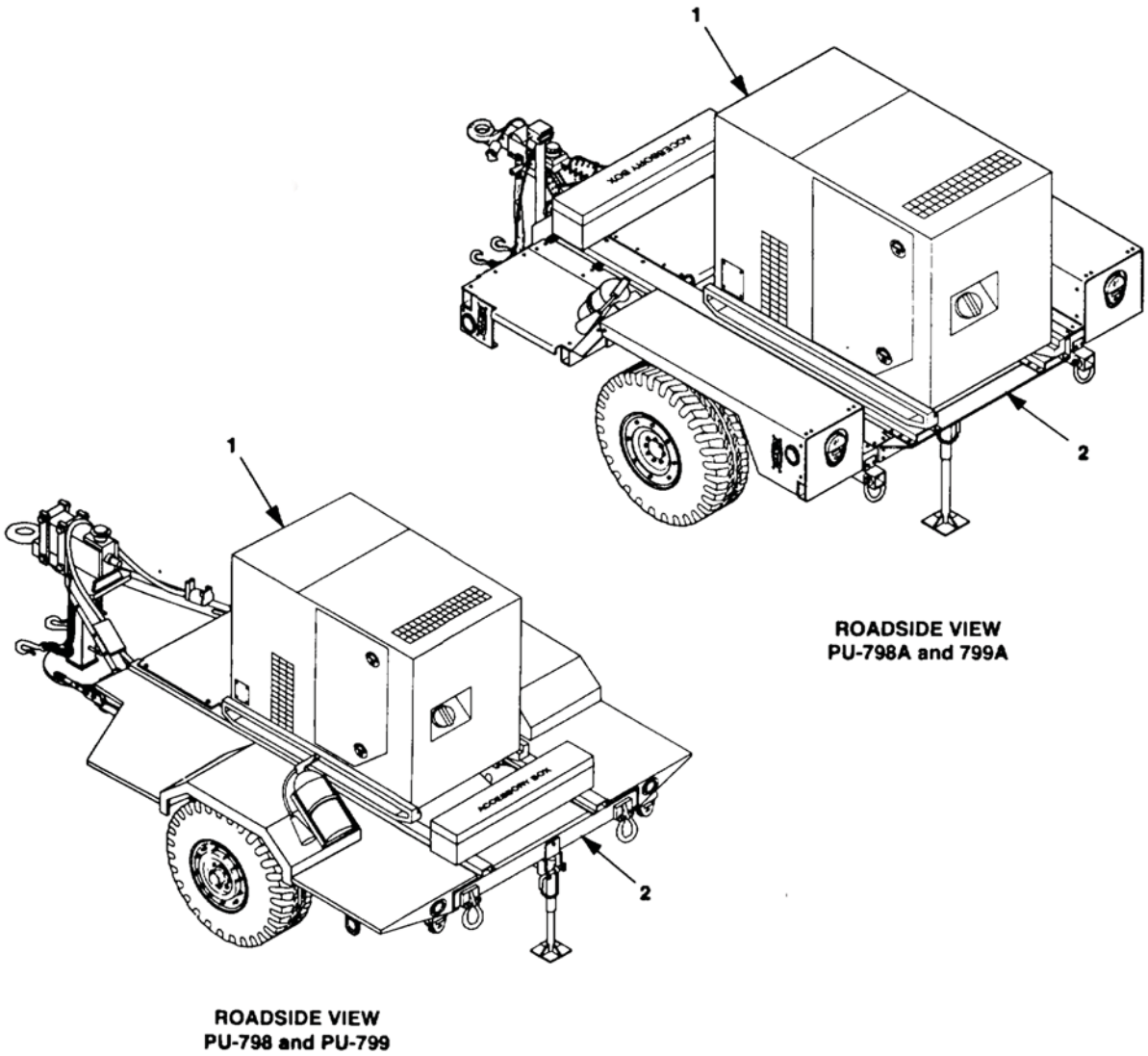

Figure 2. Location of Major Components, PU-798, PU-798A, PU-799 and PU-799A.

Table 2. Description of Major Components, PU-798, PU-798A, PU-799 and PU-799A.

Item No.	Item Name	Description
1	GENERATOR SET	Supplies power to the load. Refer to TM 9-6115-642-10 for major components of generator set.
2	TRAILER ASSEMBLY	Provides support and mounting for generator set and accessory box.

DIFFERENCES BETWEEN MODELS.

Differences between the AN/MJQ-37, AN/MJQ-38, and PU-798, PU-798, PU-799 are identified in Table 3. A number (quantity) under the applicable power plant or power unit column heading indicates that the item is a component of that power plant or power unit.

Table 3. Differences Between Models.

Component	AN/MJQ-37	AN/MJQ-38	PU-798	PU-799	PU-798A	PU-799A
Generator Set, 60 Hz	2		1		1	
Generator Set, 400 Hz		2		1		1
Switch Box	1	1				
Trailer Chassis, 1 Ton, M116A3			1	1		
Trailer Chassis, 1½ Ton, M103A3	1	1				
Trailer Chassis, Light Tactical					1	1

EQUIPMENT DATA

Generator Set

Refer to TM 9-6115-642-10.

Trailer Chassis

AN/MJQ-37 and AN/MJQ-38, 1½ Ton Trailer Chassis. Refer to TM 9-2330-213-14&P.

PU-798 and PU-799 1 Ton Trailer Chassis. Refer to TM 9-2330-202-14&P.

PU-798A and PU-799A Light Tactical. Trailer Chassis. Refer to TM 9-2330-392-14&P.

Tabulated Data for Power Plants/Power Units

Table 4. Tabulated Data for Power Plants/Power Units.

Data	AN/MJQ-37	AN/MJQ-38	PU-798	PU-799
Overall length, inches (cm)	165.0 (419.1)	165.0 (419.1)	147.0 (373.4)	147.0 (373.4)
Overall width, inches (cm)	83.0 (210.8)	83.0 (210.8)	83.5 (212.1)	83.5 (212.1)
Overall height, inches (cm)	70.2 (178.3)	70.2 (178.3)	76.0 (193.0)	76.0 (193.0)
Operational weight, pounds (kg)	4334 (1965.9)	4350 (1973.1)	2457 (1114.5)	2469 (1119.9)
Shipping weight, pounds (kg)	4540 (2059.3)	4550 (2063.9)	2660 (1206.6)	2670 (1211.1)

Table 5. Tabulated Data for Power Plants/Power Units - Continued.

Data	PU-798A	PU-799A
Overall length, inches (cm)	135.0 (342.9)	135.0 (342.9)
Overall width, inches (cm)	86.0 (218.4)	86.0 (218.4)
Overall height, inches (cm)	66.3 (168.4)	66.3 (168.4)
Shipping weight, pounds (kg)	2480 (1124.9)	2510 (1138.5)

Table 6. Towed Speeds for Power Plants/Power Units.

Data	Paved Highway	Cross Country
AN/MJQ-37, 38 (1, 1½, or Light Tactical Trailer)	50	20
PU-798, PU-798A, 799, and 799A (1, 1½, or Light Tactical Trailer)	50	20

Differences Between Switch Boxes

Currently there are two versions of the switch box that may be encountered in the field, the older version manufactured starting in 1993 (refer to WP 0005, Figure 5) and a newer version manufactured from 1996 forward which is pictured in this manual (refer to WP 0005, Figure 6). Maintenance procedures are the same for both versions that is pictured of the switch box. Old switchbox is no longer available. Part number for new switchbox is 13230E6535.

END OF WORK PACKAGE

OPERATOR AND FIELD MAINTENANCE

10 kW 60 AND 400 Hz TRAILER-MOUNTED POWER UNITS AND POWER PLANTS

THEORY OF OPERATION

FUNCTIONAL DESCRIPTION

Power Plant Functional Description

The Power Plants are mobile. The power source for the AN/MJQ-37 power plant is two DOD Model MEP-803A, 60 Hz, Tactical Quiet, 10 kW Generator Sets. The power source for the AN/MJQ-38 power plant is two DOD Model MEP-813A, 400 Hz, Tactical Quiet 10 kW Generator Sets. Generators for each power plant are mounted on a single modified M103A3 2-wheel 1½ ton trailer. Each generator set consists of a liquid-cooled diesel engine, brushless generator, excitation system, speed governing system, fuel system, 24-volt direct current starting system, control system, and malfunction protection system. The generator set has a voltage reconnection switch that allows either of three output configurations: 120-volt, single phase, 2-wire; 120/240-volt, single phase, 3-wire; or 120/208-volt, three phase, 4-wire. Electrical power to the supported system or equipment is supplied through a switch box assembly. The switch box assembly is connected between the two generator sets by power cables. The switch box enables transfer of the load from one generator set to the other without interruption of power. The system or equipment load cable may be connected to the switch box by either of two arrangements. One way is to connect a load cable to the switch box output connector. The other way is to connect a load cable to the switch box load terminals.

The switchbox contactors are powered by the J16 connector on their respective generators. J16 is protected by the convenience receptacle ground fault circuit interrupter.

Power Unit Functional Description

The Power Units are mobile. PU-798 and PU-798A each use one DOD Model MEP-803A, Tactical Quiet, 60 Hz, 10 kW Generator Set. PU-799 and PU-799A each use one DOD Model MEP-813A, Tactical Quiet, 400 Hz, 10 kW Generator Set. The generator set for each power unit is mounted on a modified M116A3, 2-wheel, 1-ton trailer (PU-798 and PU-799) or a modified high mobility, 2-wheel trailer (PU-798A and PU-799A). The generator sets consist of a liquid-cooled diesel engine, brushless generator, excitation system, speed governing system, fuel system, 24-volt direct current starting system, control system, and malfunction protection system. The generator set has a voltage reconnection switch that allows either of three output configurations: 120-volt, single phase, 2-wire; 120/240-volt, single phase, 3-wire; or 120/208-volt, three phase, 4-wire. System or equipment load cables are to be connected to the load terminals on the generator set output panel.

RELATED TECHNICAL MANUALS

Refer to WP 0099 for related technical manuals and lubrication orders.

END OF WORK PACKAGE

CHAPTER 2

OPERATOR INSTRUCTIONS

FOR

10 kW 60 AND 400 Hz TRAILER-MOUNTED POWER UNITS AND POWER PLANTS

CHAPTER 2

OPERATOR INSTRUCTIONS

WORK PACKAGE INDEX

OPERATOR MAINTENANCE

10 kW 60 AND 400 Hz TRAILER-MOUNTED POWER UNITS AND POWER PLANTS

DESCRIPTION AND USE OF OPERATOR CONTROLS AND INDICATORS

OPERATOR CONTROLS AND INDICATORS

Generator Set

Refer to TM 9-6115-642-10.

Trailer

Refer to TM 9-2330-202-14&P for PU-798 and PU-799, TM 9-2330-392-14&P for PU-798A and PU-799A, and TM 9-2330-213-14&P for AN/MJQ-37 and AN/MJQ-38.

Power Plant Switch Box Controls

Refer to Figures 1 and 2 and Table 1 for operator controls and indicators.

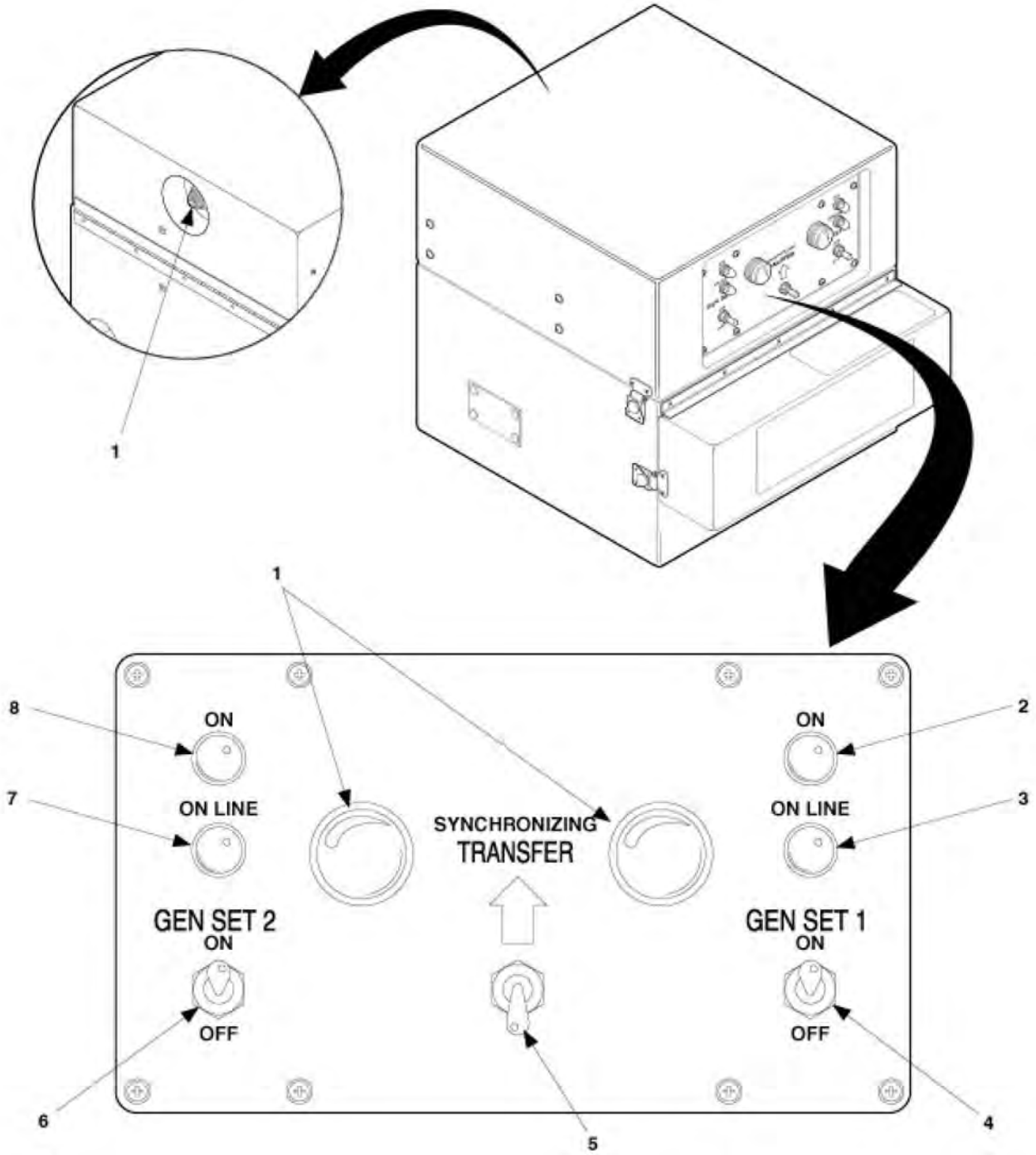

Figure 1. Switch Box Controls and Indicators (New Configuration).

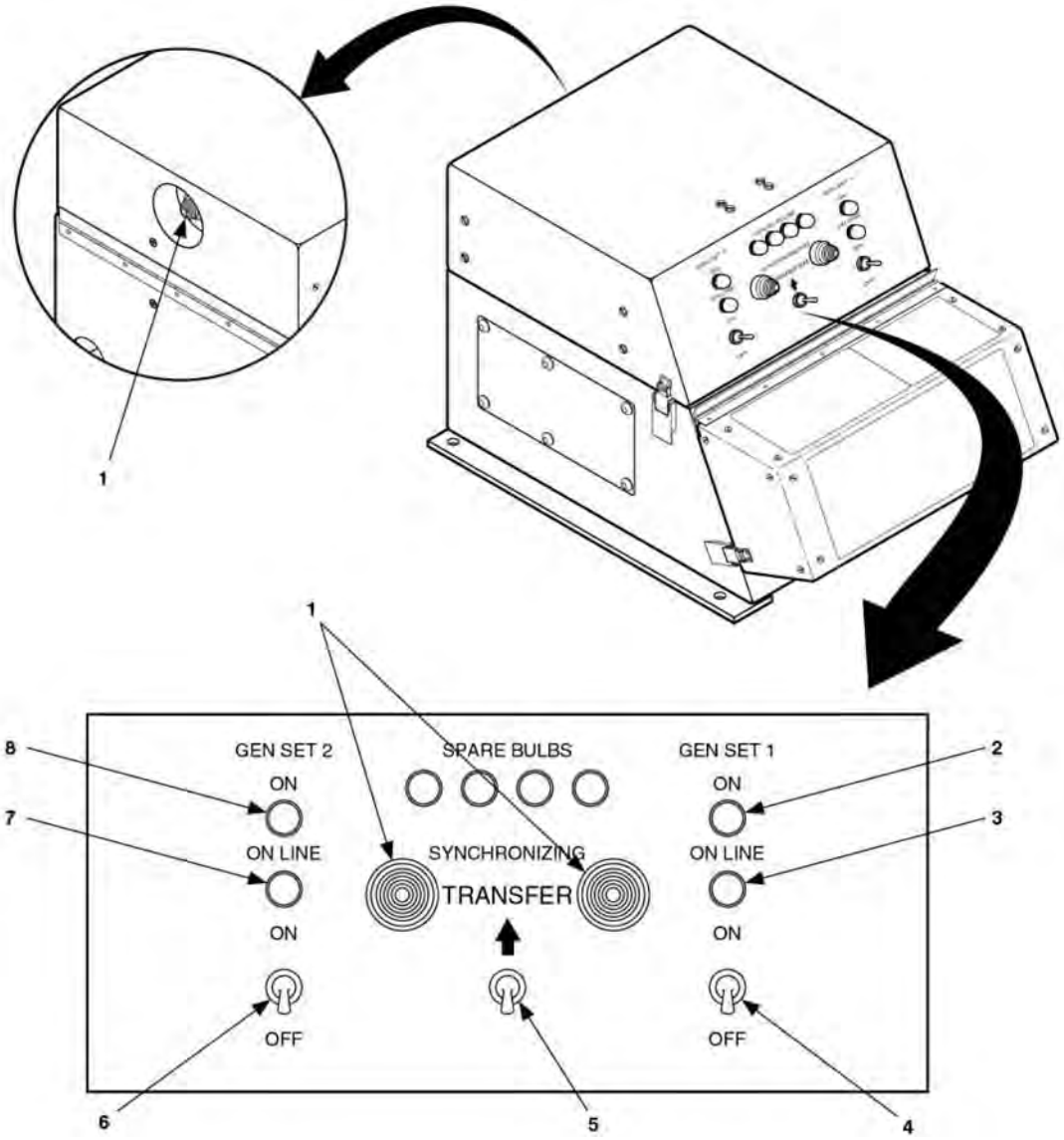

Figure 2. Switch Box Controls and Indicators (Old Configuration).

Table 1. Description of Switch Box Controls and Indicators.

Key	Control/Indicator	Function
1.	SYNCHRONIZING light	Used to synchronize generator sets for transferring load. All three lights are dark when only one generator set is operating. The lights simultaneously go from bright to dark and back to bright in repeated cycles after TRANSFER switch (5) is engaged while one generator set is on line and other is ready to go on line. All three are again dark after load has been transferred.
2.	ON light for GEN SET 1 (front generator set)	Lights when front generator set is supplying power to switch box.
3.	ON LINE light for GEN SET 1 (front generator set)	Lights when front generator set is supplying power to the load.
4.	ON/OFF switch for GEN SET 1 (front generator set)	Toggle switch, used to place front generator set on line when generator set is ready or take it off line before shutting it down.
5.	TRANSFER switch	Toggle switch, used to transfer load when one generator set is on line and SYNCHRONIZING lights (1) indicate that other generator set is ready to go on line.
6.	ON/OFF switch for GEN SET 2 (rear generator set)	Toggle switch, used to place rear generator set on line when generator set is ready or take it off line before shutting it down.
7.	ON LINE light for GEN SET 2 (rear generator set)	Lights when rear generator set is supplying power to the load.
8.	ON light for GEN SET 2 (rear generator set)	Lights when rear generator set is supplying power to switch box.

END OF WORK PACKAGE

OPERATOR MAINTENANCE

10 kW 60 AND 400 Hz TRAILER-MOUNTED POWER UNITS AND POWER PLANTS

OPERATION UNDER USUAL CONDITIONS

INITIAL SETUP:

Equipment Condition
Equipment Operational

References
TM 9-2330-202-14&P
TM 9-2330-213-14&P
TM 9-2330-392-14&P
TM 9-6115-642-10
FM 20-31

ASSEMBLY AND PREPARATION FOR USE

Unpacking the Power Plants/Power Units

Unpacking must be performed by field level maintenance personnel.

Installation

Before the power plant/power unit is started and operated, it is towed to the worksite and positioned.

Positioning Power Plant/Power Unit.

1. Place, park, or position the trailer on as level a surface as possible. This is necessary for efficient operation of the generator set(s).

WARNING

Do not disconnect trailer from towing vehicle before brakes are set and front landing leg/support leg are lowered. Failure to observe this WARNING could result in severe personal injury from trailer tipping or rolling.

2. Using the two handbrake levers, set trailer brakes securely to prevent any movement.
3. Refer to TM 9-2330-202-14&P for uncoupling PU-798 or PU-799 trailer from towing vehicle, and TM 9-2330-213-14&P for uncoupling AN/MJQ-37 and AN/MJQ-38 trailer from towing vehicle.
4. Adjust front landing leg using elevation crank to level the trailer.
5. Pull out pin (Figure 1, Item 1) that secures rear leveling-support jack (2) in travel position.

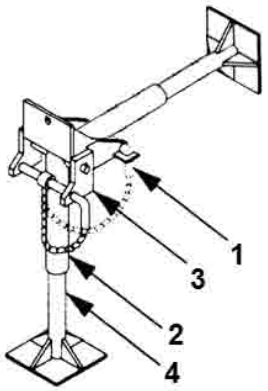

Figure 1. Rear Leveling-Support Jack.

WARNING

Impact disk must be tightened to end of threads on ground rods. Also, lockwashers and nuts must be tightened firmly against impact disks. Failure to observe this warning could result in severe personal injury and/or death and damage to the equipment.

6. Pull rear leveling-support jack (2) down. Insert pin (1) in bracket (3) to secure rear leveling-support jack (2) in down position.
7. Turn leg base (4) until it makes firm contact with ground.

END OF TASK

External Fuel Line Connection. Each generator set has provisions for obtaining fuel from an external source, such as a 5-gallon fuel can or a 55-gallon diesel fuel container. This enables operation for long intervals without frequent refilling of the fuel tank. To use an external fuel source:

WARNING

The fuel in this generator set is highly flammable. DO NOT smoke or use open flame when performing maintenance. Flames and explosion could occur, resulting in severe personal injury or death.

WARNING

Diesel fuel is flammable and toxic to eyes, skin, and respiratory tract. Skin and eye protection are required when working in contact with diesel fuel. Avoid repeated or prolonged contact. Provide adequate ventilation. Operators are to wash exposed skin and change chemical-soaked clothing promptly if exposed to fuel. Failure to comply with this warning can cause injury or death to personnel.

WARNING

Fuels used in the generator set are flammable. Do not smoke or use open flames when performing maintenance. Failure to comply with this warning can cause injury or death to personnel, and damage to the generator set.

WARNING

Hot engine surfaces from the engine and generator circuitry are possible sources of ignition. When hot refueling with DF-1, DF-2, JP5 or JP8, avoid fuel splash and fuel spill. Do not smoke or use open flame when performing refueling. Remember PMCS is still required. Failure to comply with this warning can cause injury or death to personnel, and damage to the generator set.

1. Place the external fuel source (Figure 2, Item 2) several feet, but no more than 25 feet, away from the generator set.

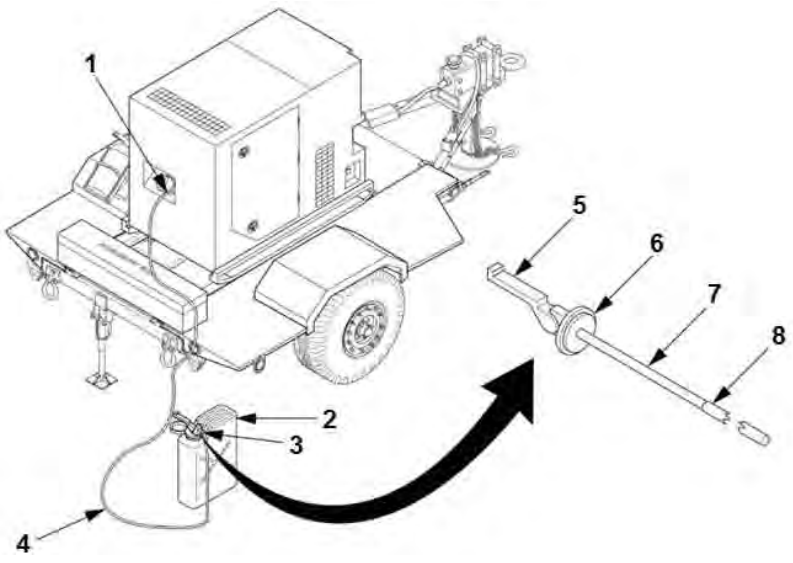

Figure 2. Auxiliary Fuel (Typical).

2. Remove ground rod, grounding strap, and slide hammer (Figure 3) from accessory storage box. Perform assembly Steps a through d.
3. Remove the container adapter (3) from the accessory storage box. If disassembled, remove all components. The components are the assembled clamp and head (5 and 6), a fuel pickup tube (7), and an extension pipe (8). The extension pipe is not needed if the external fuel source is a 5-gallon fuel can (2).

NOTE

All components should be clean.

4. Thread the fuel pickup tube (7) into the head (6). If the external fuel source is a 55-gallon container, thread the extension pipe (8) onto the fuel pickup tube (7).
5. Remove the auxiliary fuel hose (4) from its storage location. It is stored in a compartment below the generator set control panel, behind the bottom-right access door.
6. Thread one end of the auxiliary fuel hose (4) onto the fitting on the container adapter (3). Tighten the connection.
7. Connect the free end of the auxiliary fuel hose (4) to the generator set external fuel supply connection.
   a. The connection is located beside the generator set fuel tank filler neck. Tighten the connection.

WARNING

Diesel fuel is flammable and toxic to eyes, skin, and respiratory tract. Skin and eye protection are required when working in contact with diesel fuel. Avoid repeated or prolonged contact. Provide adequate ventilation. Operators are to wash exposed skin and change chemical-soaked clothing promptly if exposed to fuel. Failure to comply with this warning can cause injury or death to personnel.

WARNING

Fuels used in the generator set are flammable. Do not smoke or use open flames when performing maintenance. Failure to comply with this warning can cause injury or death to personnel, and damage to the generator set.

8. Insert the container adapter (3) into the external fuel source (2). Secure the container adapter by pressing down on the handle of the clamp (5).

WARNING

NEVER attempt to start the generator set, unless it is properly grounded. Failure to observe this warning could result in severe personal injury or death by electrocution.

WARNING

High voltage is produced when the generator set is in operation. DO NOT touch live voltage connections. Never attempt to connect or disconnect load cables while the generator set is running. Failure to comply with this warning can cause injury or death to personnel.

WARNING

All metal jewelry can conduct electricity and become entangled in generator set components. Remove all jewelry when working on generator set. Failure to comply with this warning can cause injury or death to personnel.

END OF TASK

Grounding of Generator Set

Ground the equipment in accordance with Army Field Manual FM 20-31. Typical ground rod installations are shown in Figure 3. If a ground rod is used, install and connect it as follows:

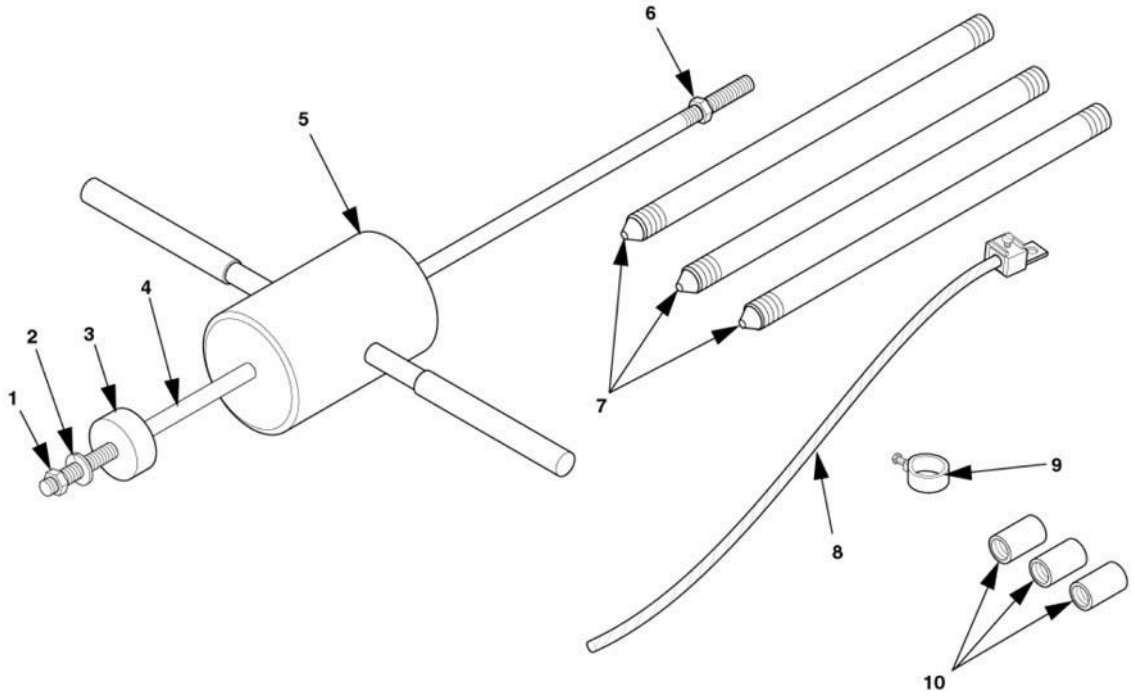

Figure 3. Ground Rod and Slide Hammer.

WARNING

Impact disk must be tightened to end of threads on rod. Also, lockwasher and nut must be tightened firmly against impact disk. Failure to comply with this warning can result in severe personal injury and/or damage to the equipment.

NOTE

The terminal lug supplied with the ground rod is too small. Use additional ground strap provided with power unit.

1. Remove ground rod, grounding strap, and slide hammer (Figure 3) from accessory storage box. Perform assembly Steps a through d.
   a. Install impact disk (3) on rod (4). Tighten impact disk to end of threads on rod (4).
   b. Install lockwasher (2) and nut (1). Tighten nut (1) and lockwasher (2) securely against impact disk (3).
   c. If installed, remove nut (6).
   d. Position hammer (5) on rod (4). Install nut (6) and tighten to end of threads on rod (4).
2. Connect ground rod coupling (10) to ground rod (7) and screw slide hammer into coupling (10). Make sure that slide hammer rod (4) seats on ground rod (7).
3. Drive ground rod into ground until coupling is just above surface.
4. Remove slide hammer assembly and install another section of ground rod (7).
5. Install another coupling (10) and the slide hammer assembly. Drive ground rod down until new coupling is just above ground surface.
6. Repeat Steps 4 and 5 until ground rod has been driven eight feet or deeper, providing an effective ground.
7. Connect clamp (9) and ground cable (8) to ground rod (7) and tighten clamp screw.
8. Connect ground cable (8) to trailer as follows:

NOTE

Ground terminal on LIGHT TACTICAL trailers is different than one used on other trailers.

   a. If the LIGHT TACTICAL trailers (PU-798A and PU-799A) are being used, perform Steps e and f. Otherwise, perform Steps b through d.
   b. Remove and retain wing nut (Figure 4, Item 1) and flat washer (2) from trailer ground stud (4) and install ground cable terminal lug (3) to ground stud (4).
   c. Install flat washer (2) on ground stud (4).
   d. Install wing nut (1) on the ground stud (4) and tighten.
   e. Loosen nut (5) on LIGHT TACTICAL trailer ground terminal (6).
   f. Insert wire (7) through slot of ground terminal (6) and tighten nut (5).

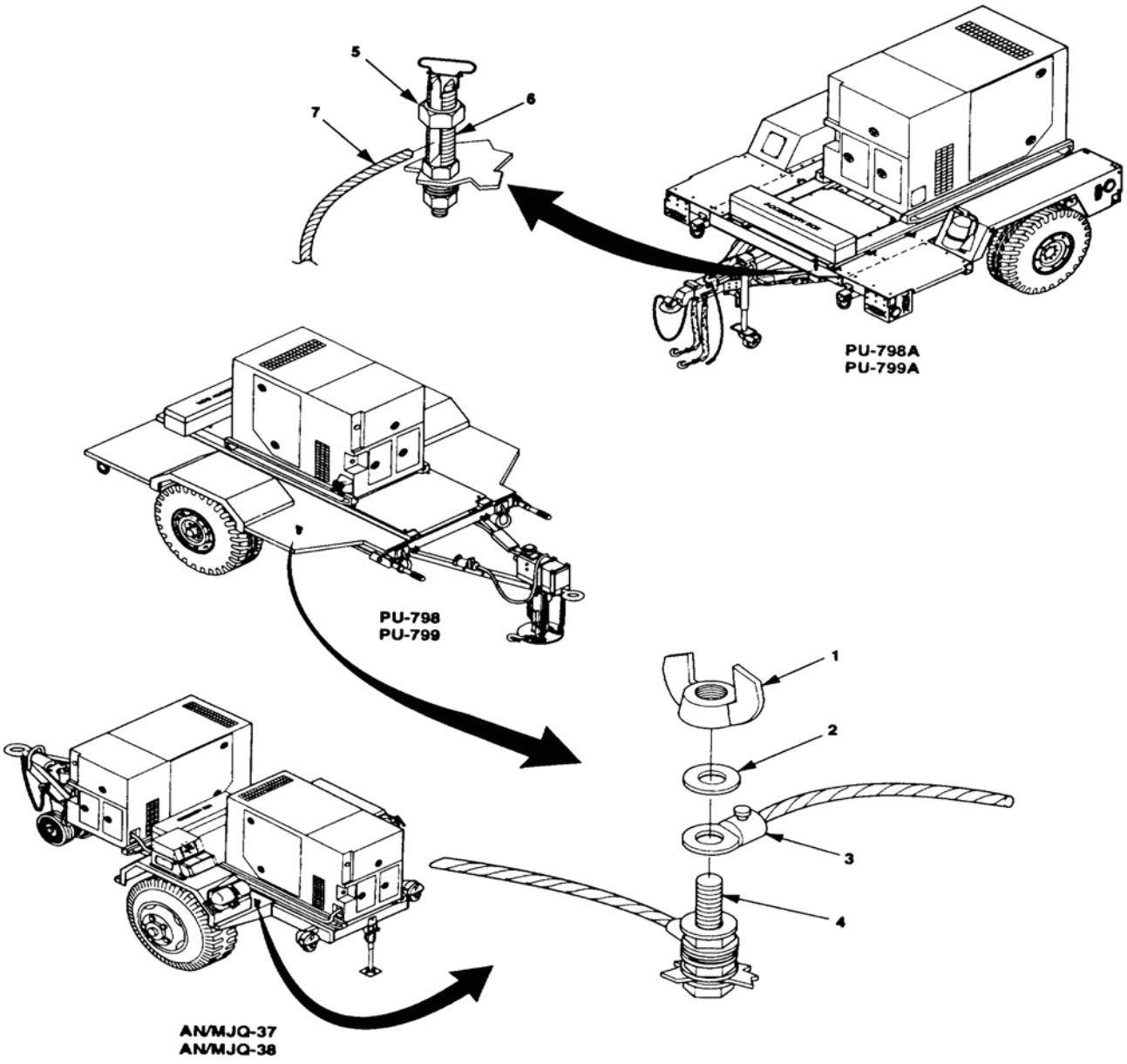

Figure 4. Power Plant and Power Unit Ground Connections.

9. Disassemble slide hammer as follows:
   a. Remove nut (Figure 3, Item 6) from end of rod (4) and retain.
   b. Remove hammer (5) from rod (4) and thread nut (6) on end of rod to prevent loss.
   c. Store hammer (5) and rod (4) with assembled parts in accessory box.

END OF TASK

Connecting Load

WARNING

High voltage is produced when this generator set is in operation. Make sure unit or units are completely shut down and free of any power source before attempting any repair or maintenance on the unit, switch box or when connecting or disconnecting load cables. Failure to comply with this warning can cause injury or death to personnel.

WARNING

A qualified technician must make the power connections and perform all continuity checks. The power source may be a generator or commercial power. Failure to comply with this warning can cause injury or death to personnel.

Power Plant. Load cables and instructions for connecting them are normally furnished with the equipment that is to be supplied with electric power. The load may be connected to the switch box (Figure 5, Item 1) by either of two arrangements. One way is to connect a load cable to the switch box output connector (7). The other way is to connect load cables to the switch box load terminals (3). Before connecting the load, determine voltage requirements of the system or equipment that is to receive electric power.

Connection to Output Connector.

WARNING

Never attempt to connect or disconnect load cables while the generator set is running. Failure to observe this warning could result in severe personal injury or death by electrocution.

1. Remove cap (Figure 5, Item 6) from output connector (7).
2. Connect load cable to output connector (7).

END OF TASK

Connection to Switch Box Load Terminals.

WARNING

Never attempt to connect or disconnect load cables while the generator set is running. Failure to observe this warning could result in severe personal injury or death by electrocution.

1. Release both clamping catches (Figure 5, Item 4) and raise load terminal cover (2).
2. Select required output terminals from Table 1.

CAUTION

When using single phase connections, always attempt to balance loads between terminals (do not connect all loads between one terminal and L0). Failure to observe this caution can result in damage to generator set.

NOTE

In a five wire configuration, ground lead will be connected to ground terminal (8).

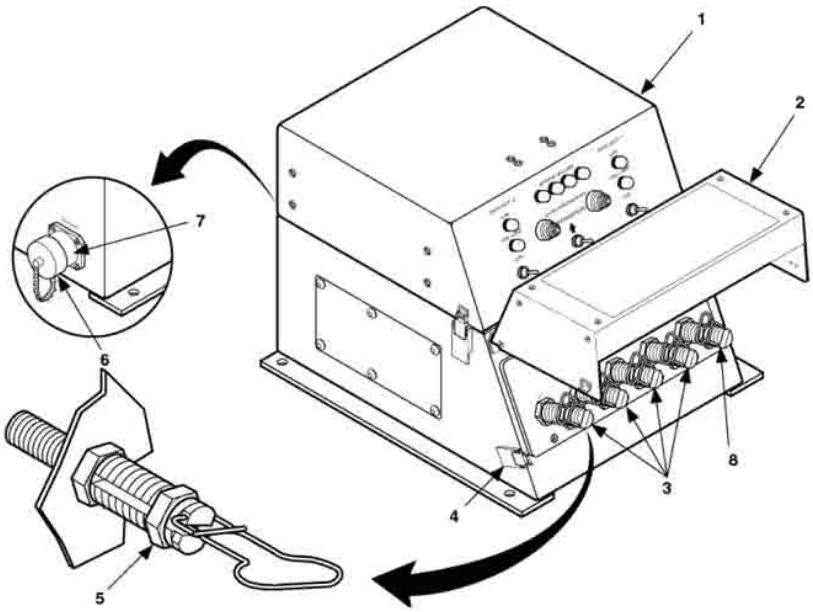

Figure 5. Switch Box Load Cable Connections (Old Configuration).

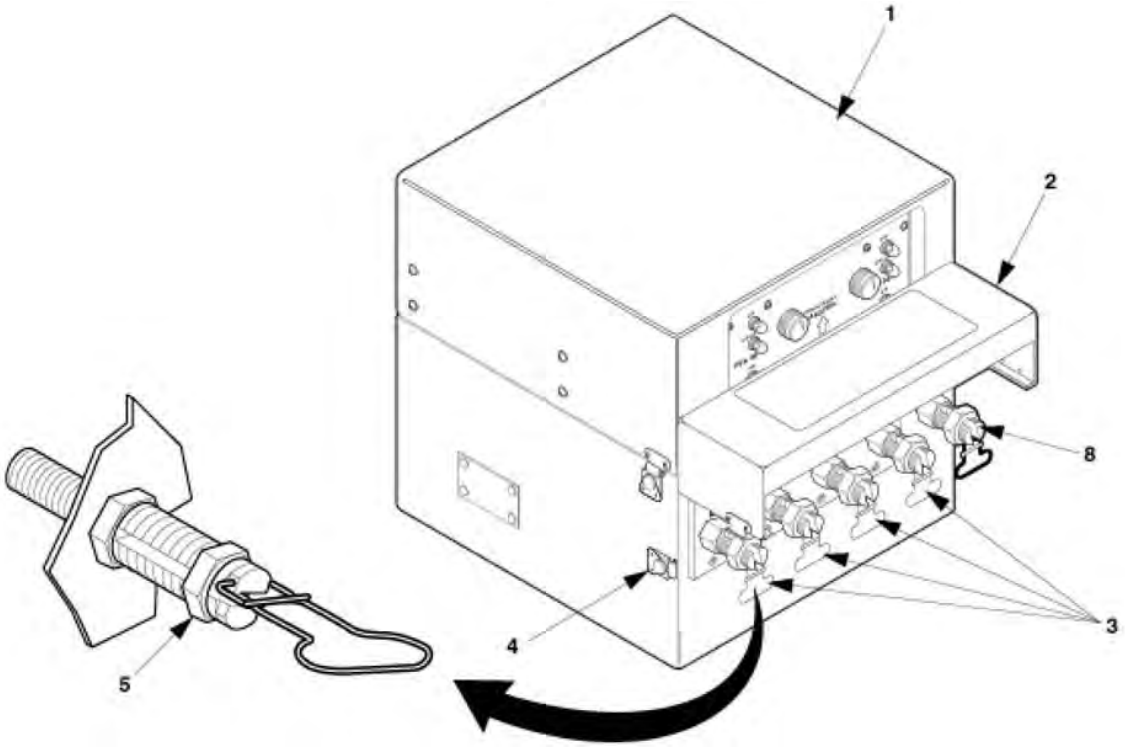

Figure 6. Switch Box Load Cable Connections (New Configuration).

Table 1. Load Terminal Voltage.

Generator Output	Terminals	Phase	Voltage Reading
120/208 V 3 PH	L1, L2 L3, L0	L1 - L2 3 PHASE L2 - L3 3 PHASE L3 - L1 3 PHASE L3 - L0 3 PHASE	208 VOLTS 208 VOLTS 208 VOLTS 120 VOLTS
120 V 1 PH	L3 - L0	L3 - L0 1 PHASE	120 VOLTS
120/240 V 1 PH	L3 - L1 L3 - L0 OR L1 - L0	L3 - L1 1 PHASE L3 - L0 1 PHASE L1 - L0 1 PHASE	240 VOLTS 120 VOLTS 120 VOLTS

3. Using load terminal box wrench located in accessory box, loosen terminal nuts (5) on terminals (3) selected in Step 2.
4. Insert ends of cables into slots of load terminal studs (3).
5. Tighten load terminal nuts (5).

Power Unit. Connect load cables to generator set load terminals. Refer to operating instructions in TM 9-6115-642-10.

END OF TASK

Positioning of Fire Extinguishers

Remove fire extinguisher(s) from bracket(s) on trailer. Locate fire extinguisher(s) on ground away from power plant/power unit.

END OF TASK

INITIAL ADJUSTMENTS, CHECKS, AND SELF TEST

Refer to WP 0010, Table 1 and perform all "Before" PMCS. Refer to TM 9-6115-642-10 and perform generator set initial adjustments, checks, and self tests.

END OF TASK

OPERATING PROCEDURES

WARNING

All metal jewelry can conduct electricity and become entangled in generator set components. Remove all jewelry when working on generator set. Failure to comply with this warning can cause injury or death to personnel.

WARNING

DO NOT wear loose clothing when performing checks, services and maintenance. Failure to comply with this warning can cause injury or death to personnel.

WARNING

High voltage is produced when the generator set is in operation. Never attempt to start the generator set unless it is properly grounded. Failure to comply with this warning can cause injury or death to personnel.

WARNING

Exhaust discharge contains deadly gases including carbon monoxide. DO NOT operate generator set in enclosed areas unless exhaust discharge is properly vented outside. Failure to comply with this warning can cause injury or death to personnel.

WARNING

Hot exhaust gases can ignite flammable materials. Allow room for safe discharge of hot gases and sparks. Failure to comply with this warning can cause injury or death to personnel.

Generator Set Operating Procedures

Refer to TM 9-6115-642-10.

Trailer Operating Procedures

Refer to TM 9-2330-202-14&P for Power Units PU-798 and PU-799, and TM 9-2330-392-14&P for PU-798A and PU-799A, and TM 9-2330-213-14&P for Power Plants AN/MJQ-37 and AN/MJQ-38.

Power Plant Switch Box Operating Procedures

Operating a Single Generator Set.

1. Perform the Preventive Maintenance Checks and Services (PMCS) listed as "Before" in WP 0010, Table 1.
2. Check that both ON/OFF switches (Figure 7, Items 4 and 6) on switch box are at center position.
3. Check that TRANSFER switch (5) on switch box is at bottom position.

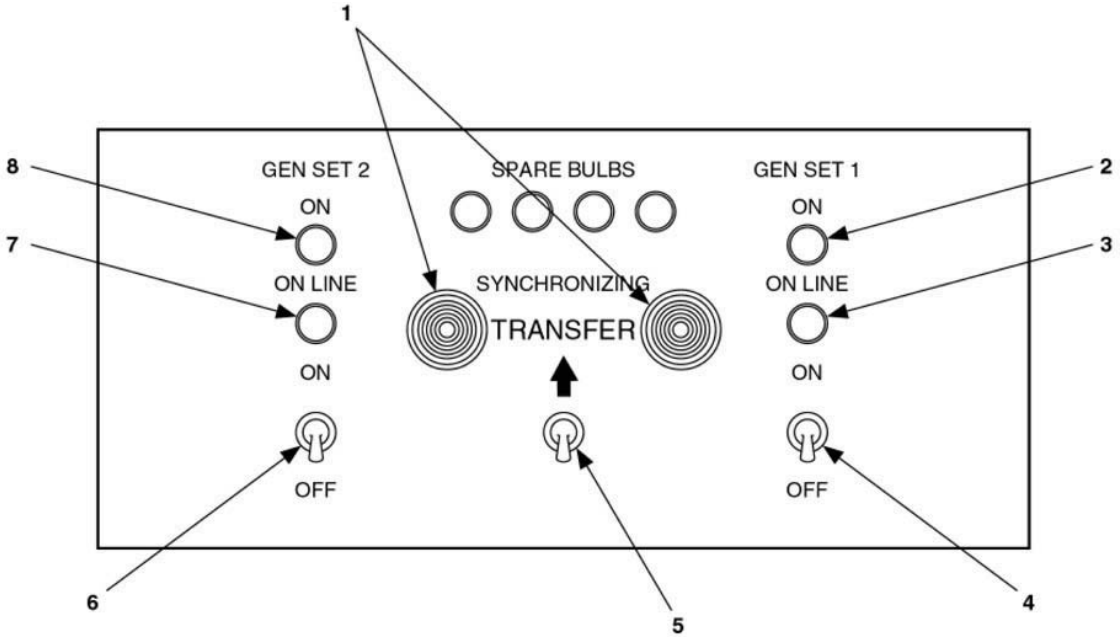

Figure 7. Power Plant Operation (Old Configuration).

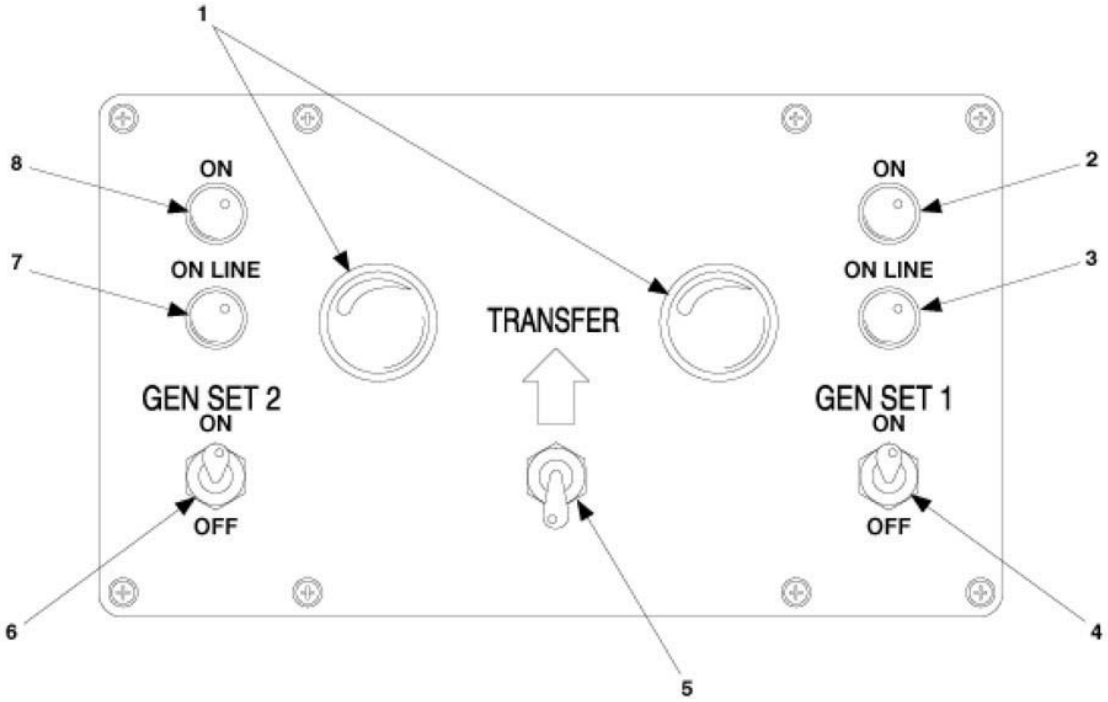

Figure 8. Power Plant Operation (New Configuration).

4. Refer to TM 9-6115-642-10 and:
   a. Start one of the generator sets.
   b. Use generator set VOLTAGE adjustable rheostat to adjust voltage to required value.
   c. Using generator set frequency adjust control, adjust frequency to required value.
   d. Set AC CIRCUIT INTERRUPTER switch on the operating generator set to CLOSED position.
5. Check switch box to make sure that GEN SET ON light (8 or 2) is lit for generator set just started.
6. Set switch box ON/OFF switch (6 or 4) below lit GEN SET ON light to ON position.
7. Check that switch box ON light (8 or 2) and ON LINE light (7 or 3) for operating generator set are both lit. The generator set is now supplying power to the connected load.
8. Observe frequency meter and readjust to proper frequency for load if required.
9. Refer to WP 0010, Table 1 and perform generator set "During" PMCS.

END OF TASK

Load Transfer.

WARNING

High voltage is produced when this generator set is in operation. Make sure unit or units are completely shut down and free of any power source before attempting any repair or maintenance on the unit, switch box or when connecting or disconnecting load cables. Failure to comply with this warning can cause injury or death to personnel.

1. For the generator set that is not operating:
   a. Refer to WP 0010, Table 1 and perform the "Before" PMCS.
   b. Check that switch box ON/OFF switch (6 or 4) is at center position.
   c. Check that switch box TRANSFER switch (5) is at bottom position.

d. Refer to TM 9-6115-642-10 and:

(1) Start the generator set.

(2) Use generator set VOLTAGE adjustable rheostat to adjust voltage to required value.

(3) Using generator set frequency adjust control, adjust frequency to required value.

(4) Set AC CIRCUIT INTERRUPTER switch to CLOSED position.

e. Check switch box controls and indicators (Figure 7) to ensure that:

(1) GEN SET ON light (8 or 2) and ON LINE light (7 or 3) is lit for generator set that has been supplying electric power to the load.

(2) GEN SET ON light (8 or 2) for generator set just started is lit.

f. Move switch box TRANSFER switch (5) in the direction of the arrow. All SYNCHRONIZING lights (1 and 9) should be going from bright to dark at the same time. If SYNCHRONIZING lights do not begin to function, report problem to next higher level of maintenance.

g. Refer to TM 9-6115-642-10 and:

(1) Slowly increase frequency of generator set that was just started. Continue until SYNCHRONIZING lights (1 and 9) go from bright to dark together at a rate of one or more times per second.

(2) Slowly decrease frequency of generator set that was just started. Continue until SYNCHRONIZING lights (1 and 9) blink together at a rate of once every three to four seconds.

h. When SYNCHRONIZING lights (1 and 9) are dark, hold the switch box ON/OFF switch (6 or 4) for the generator set that was just started to ON position until ON light remains on. Release the switch. The ON LINE light for the first generator set that was running should immediately go out.

i. Check switch box lights, as follows:

(1) The ON LINE light (7 or 3) should be lit for the generator set that was just started.

(2) The ON LINE light (7 or 3) for the other generator set should be off.

j. If lights fail to go on or off, repeat Steps g, h, and i. If lights do not function properly, report the problem to the next higher level of maintenance.

2. The second generator set is now supplying electric power to the connected load. All SYNCHRONIZING lights (1 and 9) should be dark.

3. Refer to TM 9-6115-642-10 and set AC CIRCUIT INTERRUPTER switch for generator set that is now offline to OPEN position.

4. Check that switch box ON/OFF switch (6 or 4) for the off line generator set is at center position.

5. Refer to TM 9-6115-642-10 and:

a. Shut down generator set that is now offline.

b. Using generator set VOLTAGE adjustable rheostat, adjust voltage of generator set that is now on line to the desired value.

c. Using generator set frequency adjust control, adjust frequency of generator set that is now on line to desired value.

6. Refer to WP 0010, Table 1 and perform "After" PMCS for the generator set that was shut down.

7. For the generator set that is now ON LINE, perform the PMCS listed as "During" in WP 0010, Table 1.

END OF TASK

Stopping Generator Set.

1. Set the switch box ON/OFF switch (Figure 7, Item 6 or 4) for the generator set to be stopped to OFF position.

2. Stop the generator set in accordance with TM 9-6115-642-10.

3. Perform the generator set PMCS listed as "After" in WP 0010, Table 1.

END OF TASK

IDENTIFICATION AND INFORMATION PLATES

AN/MJQ-37 Identification/Transportation Data Plate

See Figure 9. This plate is located on front of curbside fender.

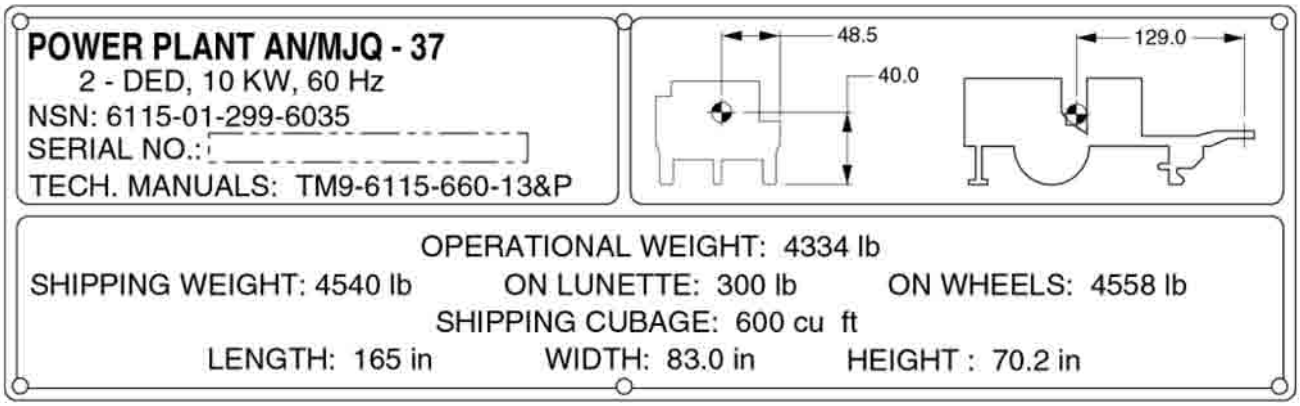

Figure 9. AN/MJQ-37 Identification/Transportation Data Plate.

AN/MJQ-38 Identification/Transportation Data Plate

Refer to Figure 10. This plate is located on front of curbside fender.

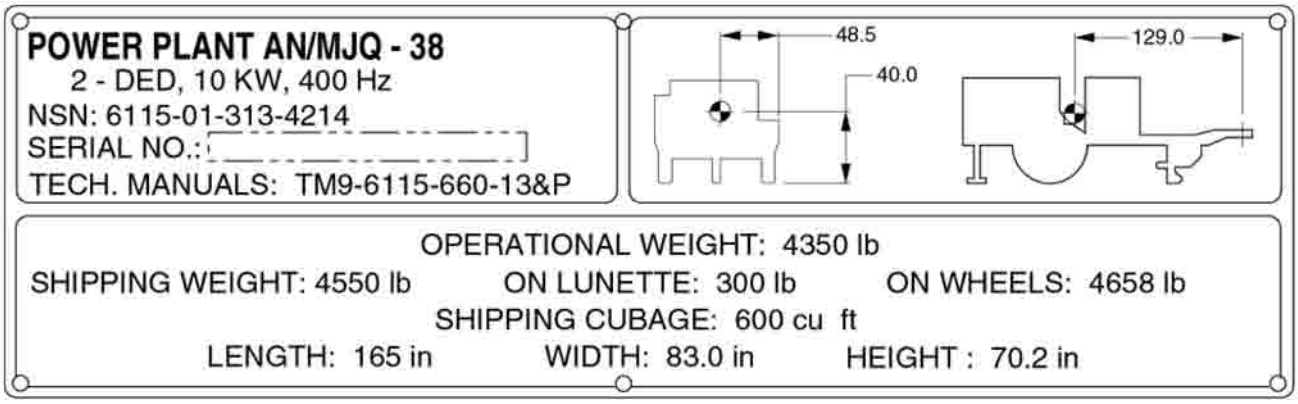

Figure 10. AN/MJQ-38 Identification/Transportation Data Plate.

PU-798 Identification/Transportation Data Plate

See Figure 11. This plate is located on rear of curbside fender.

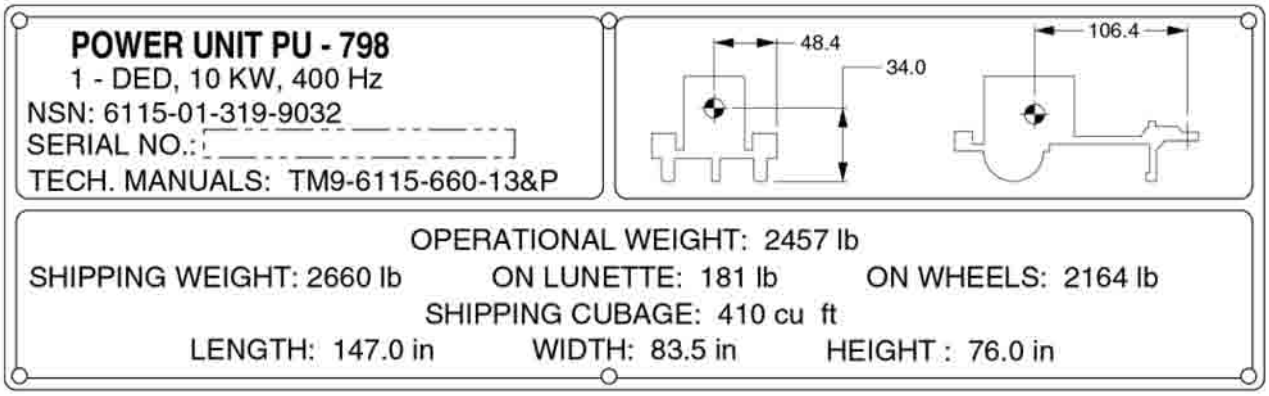

Figure 11. PU-798 Identification/Transportation Data Plate.

PU-799 Identification/Transportation Data Plate

Refer to Figure 12. This plate is located on rear of curbside fender.

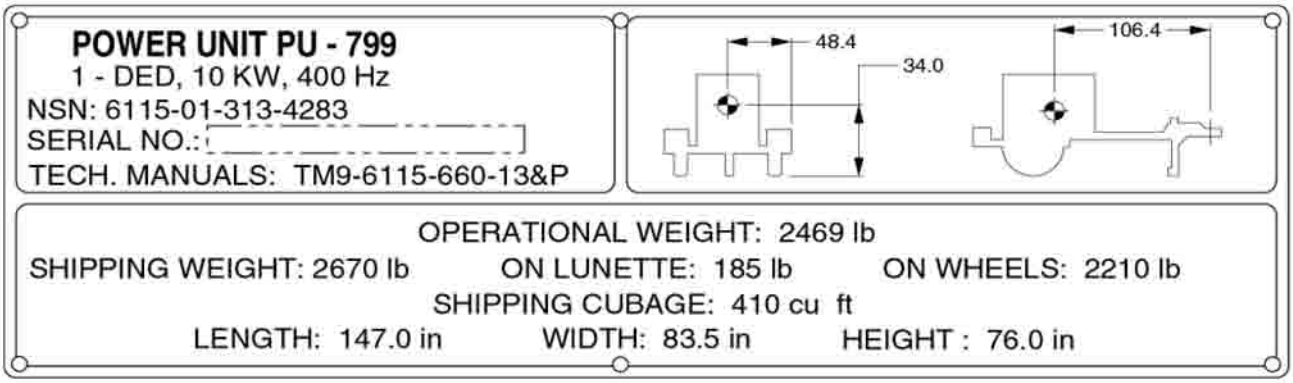

Figure 12. PU-799 Identification/Transportation Data Plate.

PU-798A Shipping Data/Identification Plate

See Figure 13. This plate is located on front of curbside fender.

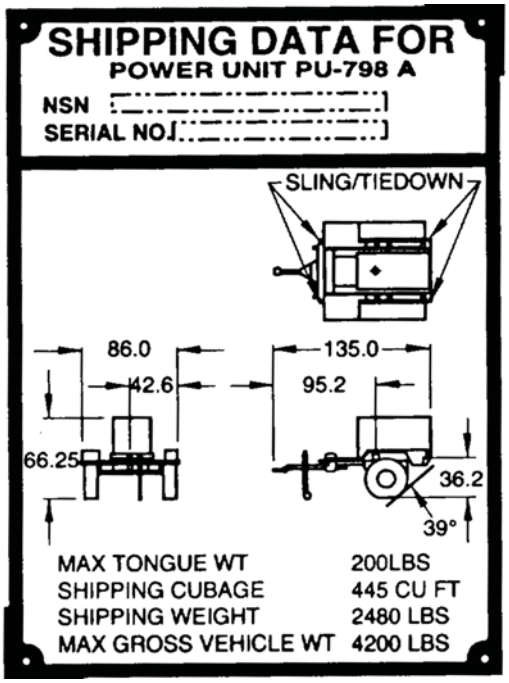

Figure 13. PU-798A Shipping Data/Identification Plate.

PU-799A Shipping Data/Identification Plate

Refer to Figure 14. This plate is located on front of curbside fender.

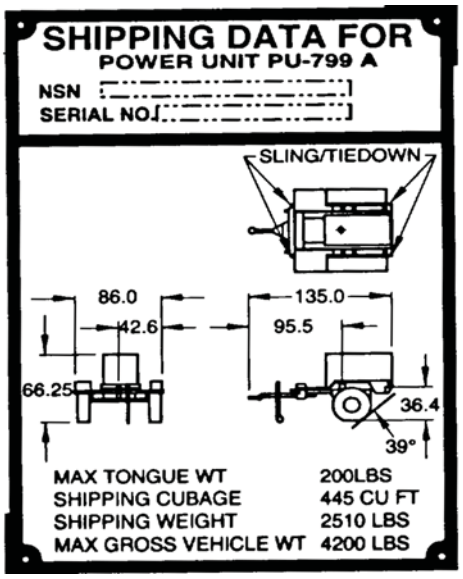

Figure 14. PU-799A Shipping Data/Identification Plate.

NOTE

Plates (below) depicted on WP 0030, Figure 1 of this manual.

AN/MJQ-37 Item Unique Identification (IUID) Plate

See Figure 15. This plate is centered directly above the AN/MJQ-37 Identification/Transportation Data Plate.

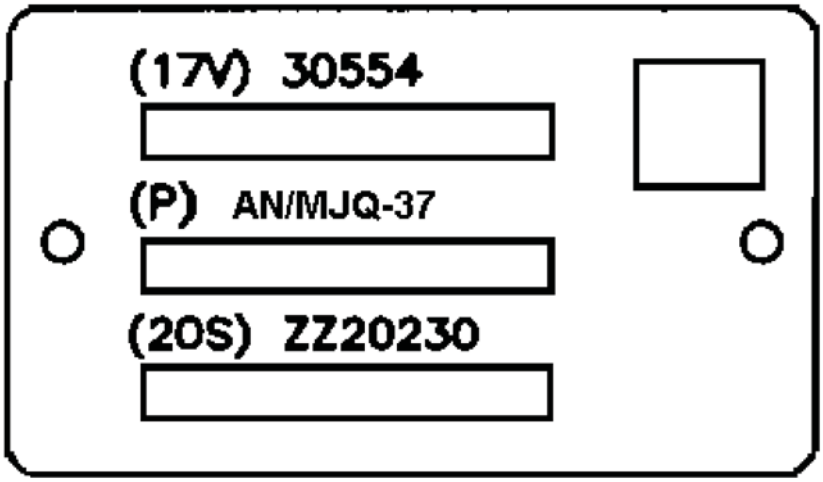

Figure 15. AN/MJQ-37 Item Unique Identification (IUID) Plate.

AN/MJQ-38 Item Unique Identification (IUID) Plate

Refer to Figure 16. This plate is located directly above the AN/MJQ-38 Identification/Transportation Data Plate, and centered.

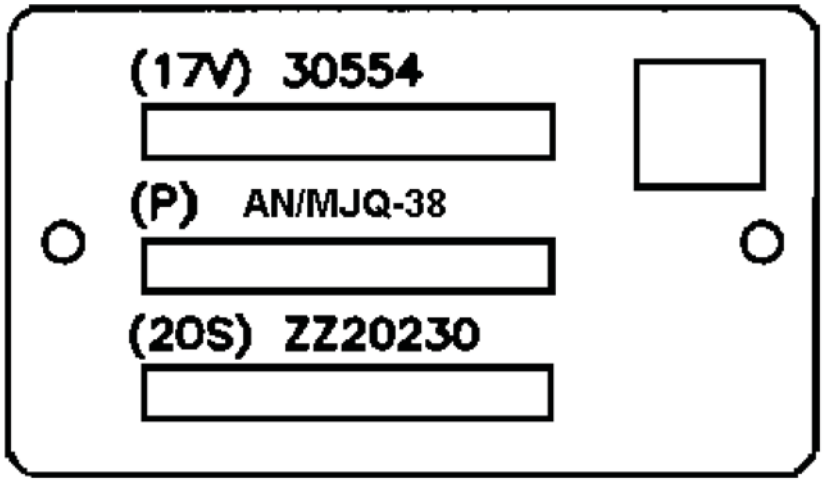

Figure 16. AN/MJQ-38 Item Unique Identification (IUID) Plate.

PU-798 Item Unique Identification (IUID) Plate

See Figure 17. This plate is centered directly below the PU-798 Identification/Transportation Data Plate.

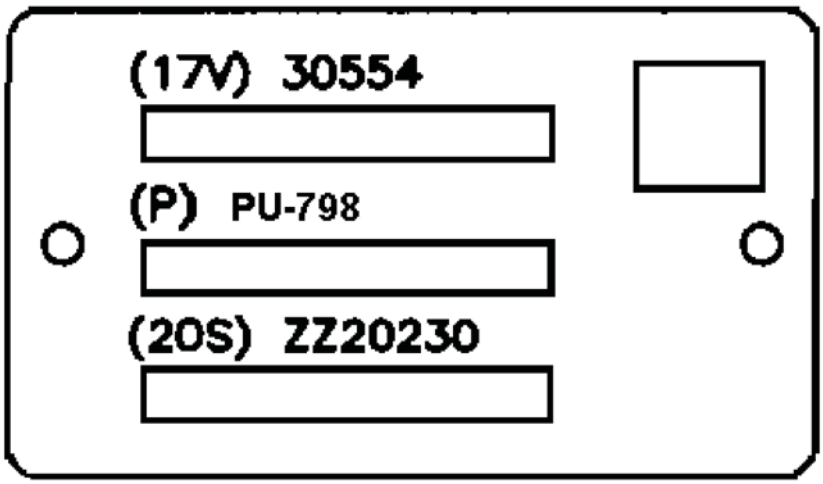

Figure 17. PU-798 Item Unique Identification (IUID) Plate.

PU-799 Item Unique Identification (IUID) Plate

Refer to Figure 18. This plate is located directly below the PU-799 Identification/Transportation Data Plate, and centered.

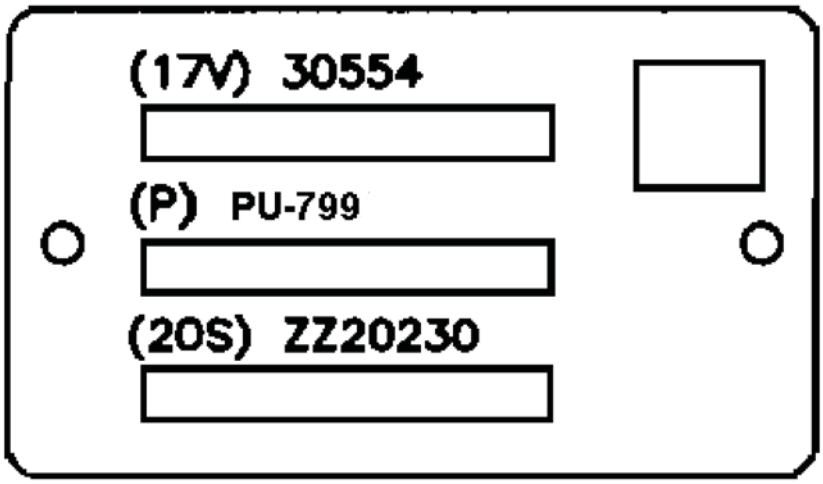

Figure 18. PU-799 Item Unique Identification (IUID) Plate.

PU-798A Item Unique Identification (IUID) Plate

See Figure 19. This plate is top edge aligned directly to the left of the PU-798A Shipping Data/Identification Plate.

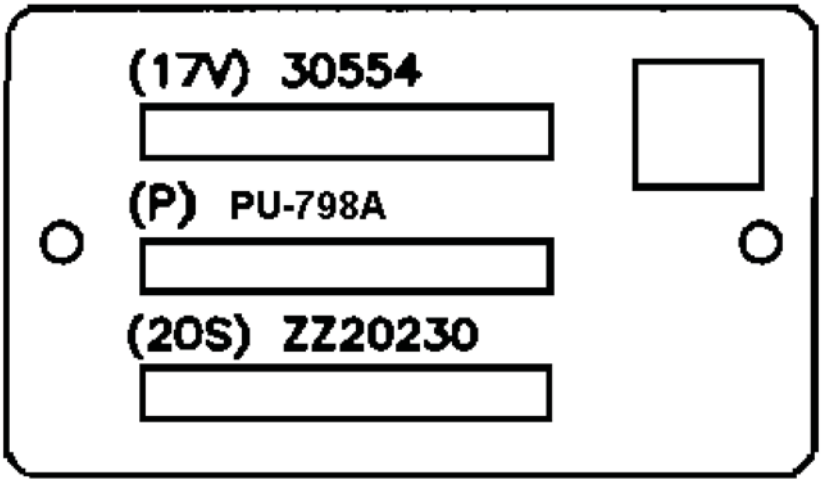

Figure 19. PU-798A Item Unique Identification (IUID) Plate.

PU-799A Item Unique Identification (IUID) Plate

Refer to Figure 20. This plate is located directly to the left of the PU-799A Shipping Data/Identification Plate, with top edges aligned.

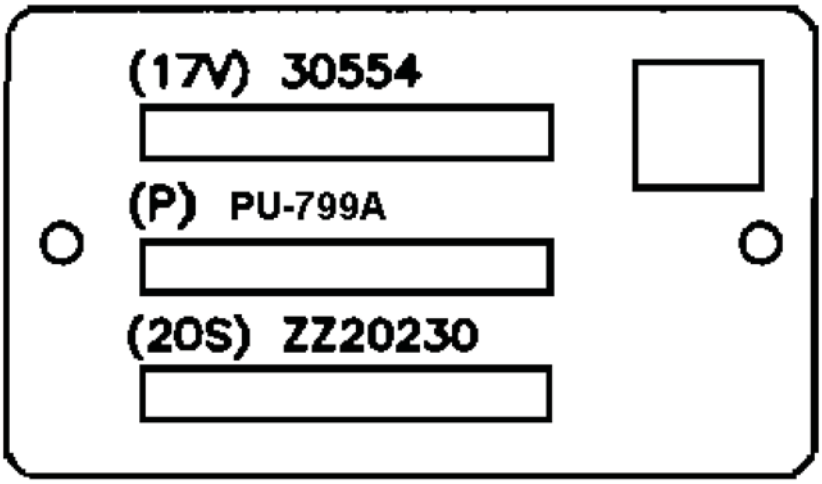

Figure 20. PU-799A Item Unique Identification (IUID) Plate.

AN/MJQ-37 Switchbox Item Unique Identification (IUID) Plate

Refer to Figure 21. This plate is located directly above the Switchbox Identification Plate (Part No. 13230E6823-5).

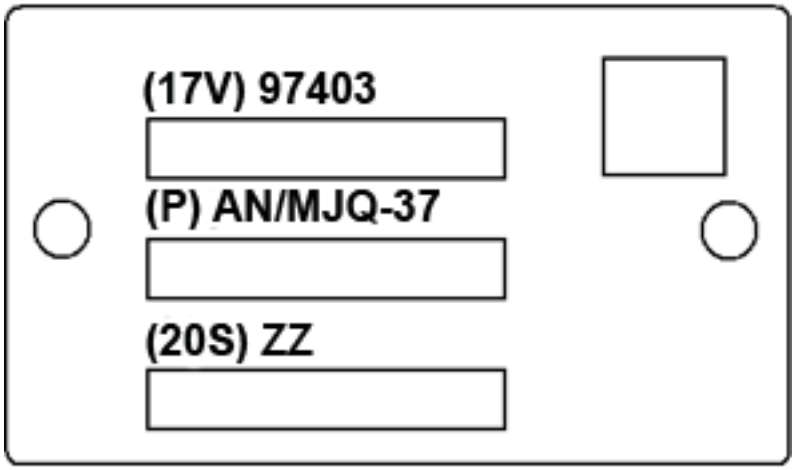

Figure 21. Switchbox Item Unique Identification (IUID) Plate.

AN/MJQ-38 Switchbox Item Unique Identification (IUID) Plate

Refer to Figure 22. This plate is located directly above the Switchbox Identification Plate (Part No. 13230E6823-5).

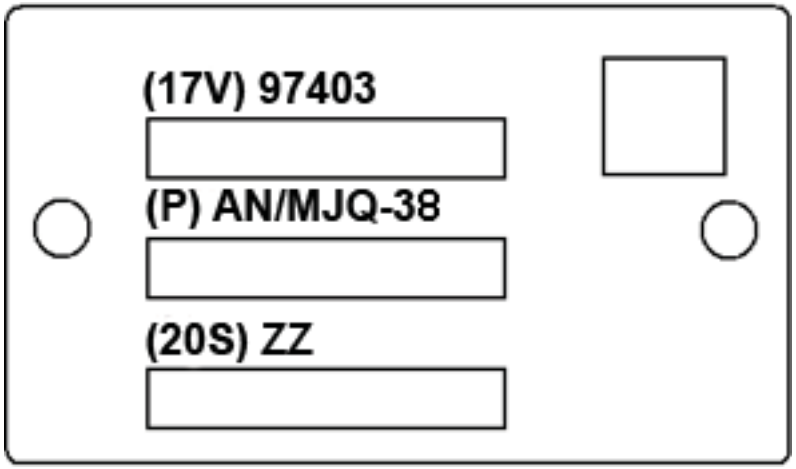

Figure 22. Switchbox Item Unique Identification (IUID) Plate.

AN/MJQ-37 and AN/MJQ-38 Switchbox Identification Plate

Refer to Figure 23. This plate is located directly below the Switchbox Item Unique Identification (IUID) Plate.

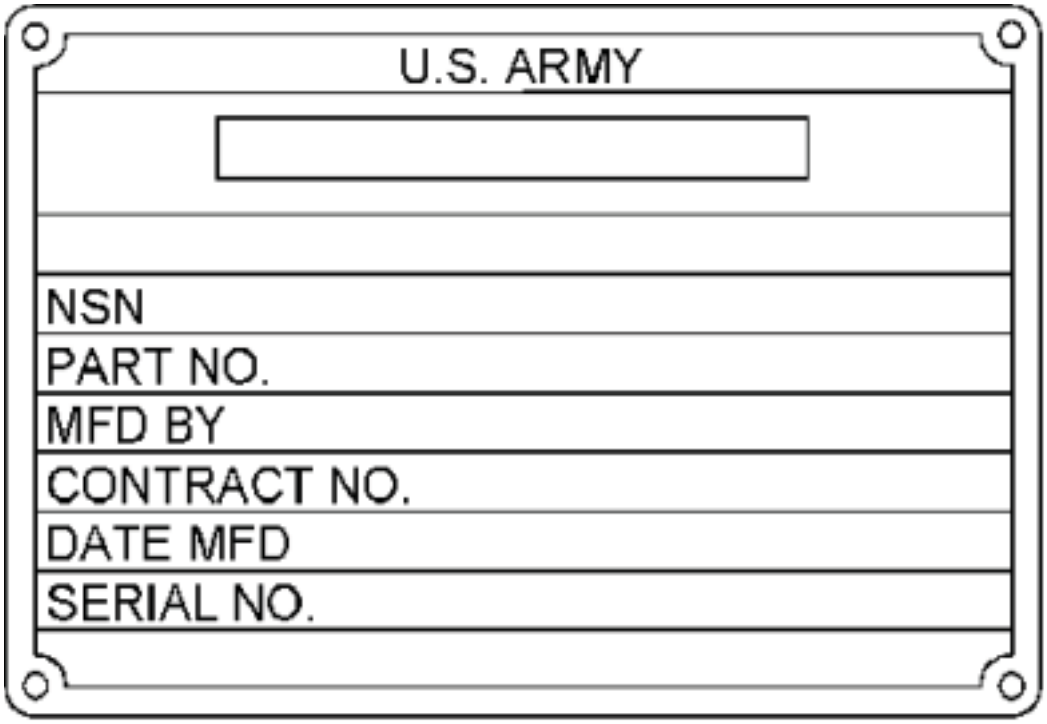

Figure 23. Switchbox Identification Plate.

AN/MJQ-37 and AN/MJQ-38 Trailer Chassis Identification Plate

See Figure 24. This plate is located on curbside tow bar.

PU-798 and PU-799 Trailer Chassis Identification Plate

Refer to Figure 24. This plate is located on curbside tow bar.

PU-798A and PU-799A Trailer Chassis Identification Plate

See Figure 24. This plate is located on curbside tow bar.

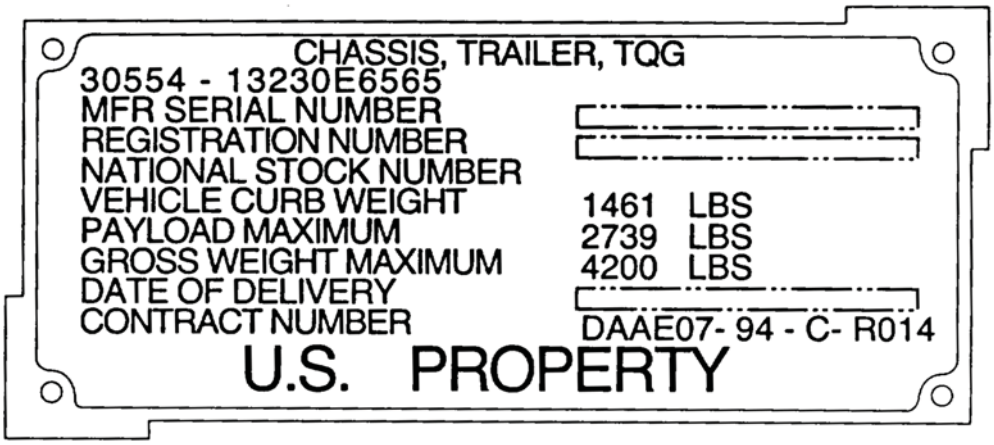

Figure 24. PU-798A and PU-799A Trailer Chassis Identification Plate.

Power Plant Instruction Plate

See Figure 25. This plate covers operating procedures for power plants AN/MJQ-37 and AN/MJQ-38. It is located on the top of the switch box load terminal cover.

POWER PLANT OPERATING PROCEDURES

BEFORE OPERATION

1. CHECK/SERVICE BOTH GEN SETS BEFORE OPERATING. CONNECT "GND" TERMINAL TO GROUND.

OPERATING PROCEDURES

1. START EITHER GEN SET. ADJUST VOLTAGE AND FREQUENCY. PUT "CKT BKR" SWITCH IN "CLOSED" POSITION.
2. SWITCH BOX "GEN SET" LIGHT SHOULD LIGHT. IF NOT, REFER TO TM.
3. AT SWITCH BOX, PLACE "ON-OFF" SWITCH TO "ON". "ON LINE" LIGHT SHOULD LIGHT. IF NOT, REFER TO TM.

LOAD TRANSFER PROCEDURES, ONE SET OPERATING AS ABOVE.

1. START SECOND SET, ADJUST VOLTAGE AND FREQUENCY TO MATCH OPERATING SET.
2. ON SECOND SET, PLACE "CKT BKR" SWITCH IN THE "CLOSED" POSITION.
3. AT SWITCH BOX, "GEN SET" LIGHT FOR SECOND SET SHOULD LIGHT. IF NOT REFER TO TM.
4. AT SWITCH BOX, PLACE "TRANSFER" SWITCH TO "TRANSFER". BOTH "SYNCHRONIZING" LIGHTS SHOULD BE GOING FROM BRIGHT TO DARK TOGETHER.
5. ON SECOND SET, INCREASE FREQUENCY UNTIL "SYNCHRONIZING" LIGHTS BLINK TOGETHER ONE OR MORE TIMES PER SECOND. THEN DECREASE FREQUENCY UNTIL LIGHTS BLINK TOGETHER ONCE EVERY 3-4 SECONDS.
6. AT SWITCH BOX, WHEN BOTH LIGHTS ARE DARK, PLACE "ON-OFF" SWITCH FOR SECOND SET TO "ON".
7. "ON LINE" LIGHT FOR SECOND SET SHOULD LIGHT, "ON-LINE" LIGHT FOR OTHER SET SHOULD GO OFF. (SECOND SET IS NOW SUPPLYING POWER AND "SYNCHRONIZING" LIGHTS SHOULD BE DARK).
8. AT FIRST SET, PLACE "CKT BKR" SWITCH TO THE "OPEN" POSITION AND SHUT THE SET DOWN.

Figure 25. Power Plant Instruction Plate.

PREPARATION FOR MOVEMENT

Shut Down Power Plant/Power Unit

If power plant/power unit is operating, stop generator set as follows:

Power Plant. Refer to Stopping Generator Set.

Power Unit.

1. Stop the generator set in accordance with TM 9-6115-642-10.
2. Perform the generator set PMCS listed as "After" in WP 0010, Table 1.

END OF TASK

Disconnect Load Cables

WARNING

Never attempt to connect or disconnect load cables while the generator set is running. Failure to observe this warning could result in severe personal injury or death by electrocution.

1. For Power Unit configuration, refer to TM 9-6115-642-10 and disconnect load cables.
2. For Power Plant configuration where load cable is connected to switch box output connector, perform the following:
   a. Disconnect load cable from switch box output connector (Figure 5, Item 6).
   b. Install cap (5) on output connector (6).
   c. Store load cable with equipment that was being supplied with electric power.
3. For Power Plant configuration where load cables are connected to switch box load terminals, perform the following:
   a. Release both clamping catches (4) and raise load terminal cover (2).
   b. Using load terminal box wrench, loosen terminal nuts (1).
   c. Disconnect load cables from switch box load terminals (3).
   d. Store load cables with equipment that was being supplied with electric power.

END OF TASK

Retrieve Ground Cable and Rod

1. Remove wing nut (Figure 4, Item 1) and flat washer (2). Remove ground cable (3) from ground stud (4).
2. Loosen clamp (Figure 3, Item 9) and remove ground cable (8) from clamp.
3. Store ground cable in accessory box.
4. Remove slide hammer components from accessory box and assemble as follows:
   a. If installed, remove nut (Figure 3, Item 6) from rod (4).
   b. Place hammer (5) on rod (4).
   c. Install nut (6) on rod (4) and tighten to end of threads.

WARNING

Impact disk must be tightened to end of threads on ground rods. Also, lockwashers and nuts must be tightened firmly against impact disks. Failure to observe this warning could result in severe personal injury and/or death and damage to the equipment.

   d. Check that impact disk (3) is tightened to end of threads on rod (4). Tighten as needed.

e. Tighten nut (1) and lockwasher (2) securely against impact disk (3).

5. Remove ground rod as follows:

CAUTION

Slide hammer rod and ground rod must make firm contact inside ground rod coupler. If not in firm contact, ground rod, coupler and slide hammer could be damaged.

a. Refer to Figure 23 and position slide hammer above ground rod coupling (3). Invert slide hammer so that end having impact disk (1) is up. Connect slide hammer rod (2) to ground rod coupling (3). Tighten so that end of rod (2) makes firm contact with end of ground rod section (4) inside coupling (3).

b. Use slide hammer to pull ground rod section (4) out of ground. Pull until second coupling (3) is exposed.

c. Disconnect slide hammer from top coupling (3).

d. Disconnect top ground rod section (4) from bottom coupling (3).

e. Remove clamp (5) from ground rod (4). Store clamp in accessory box.

f. Connect slide hammer rod (2) to coupling (3) on ground rod section (4) still in ground.

g. Use slide hammer to pull second ground rod section (4) out of ground. Pull ground rod section (4) until third coupling (3) is exposed.

h. Repeat Steps c through e for third ground rod section (4).

i. Use slide hammer to pull remaining ground rod section (4) out of ground.

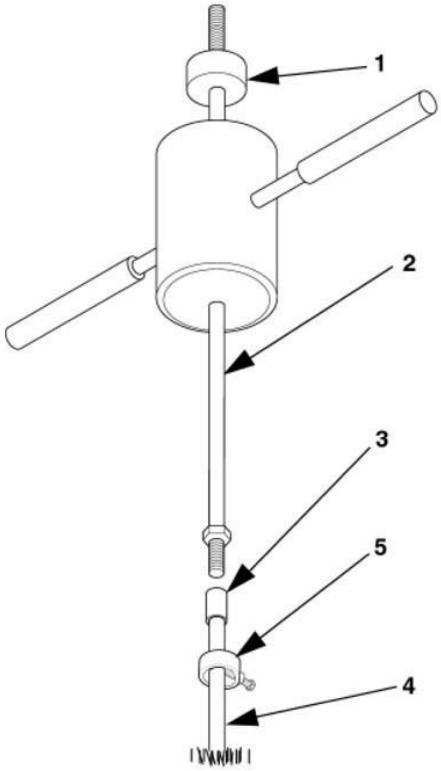

Figure 26. Remove Ground Rod.

j. Disconnect slide hammer rod (2) from ground rod coupling (3).

k. Remove couplings (3) from ground rod sections (4).

6. Clean the couplings (3) and ground rod sections (4). Store cleaned items in accessory box.

7. Partially disassemble slide hammer as follows:
   a. Remove nut (Figure 3, Item 6).
   b. Remove hammer (5).
   c. Loosely install nut (6).
8. Return slide hammer to its storage location in accessory box.

END OF TASK

Retrieve Fire Extinguisher(s)

Retrieve fire extinguisher(s) and stow in bracket(s) on trailer.

WARNING

Diesel fuel is flammable and toxic to eyes, skin, and respiratory tract. Skin and eye protection are required when working in contact with diesel fuel. Avoid repeated or prolonged contact. Provide adequate ventilation. Operators are to wash exposed skin and change chemical-soaked clothing promptly if exposed to fuel. Failure to comply with this warning can cause injury or death to personnel.

WARNING

Fuels used in the generator set are flammable. Do not smoke or use open flames when performing maintenance. Failure to comply with this warning can cause injury or death to personnel, and damage to the generator set.

Disconnect External Fuel Source

Disconnect auxiliary fuel hose as follows:

1. Disconnect the auxiliary fuel hose (Figure 24, Item 4) from the generator set external fuel supply connection (1). Elevate the free end of the auxiliary fuel hose to drain fuel back into the external fuel source (2). Place free end of auxiliary fuel hose on a clean surface.
2. Disconnect auxiliary fuel hose (4) from fitting on container adapter (3).
3. Store auxiliary fuel hose in the generator set storage compartment below the generator set control panel, behind the bottom-right access door.
4. Release the container adapter from the external fuel source by lifting the handle of the clamp (5). Remove the container adapter from the external fuel source. Close the external fuel source and load onto appropriate transportation.
5. Store the container adapter in the accessory box.

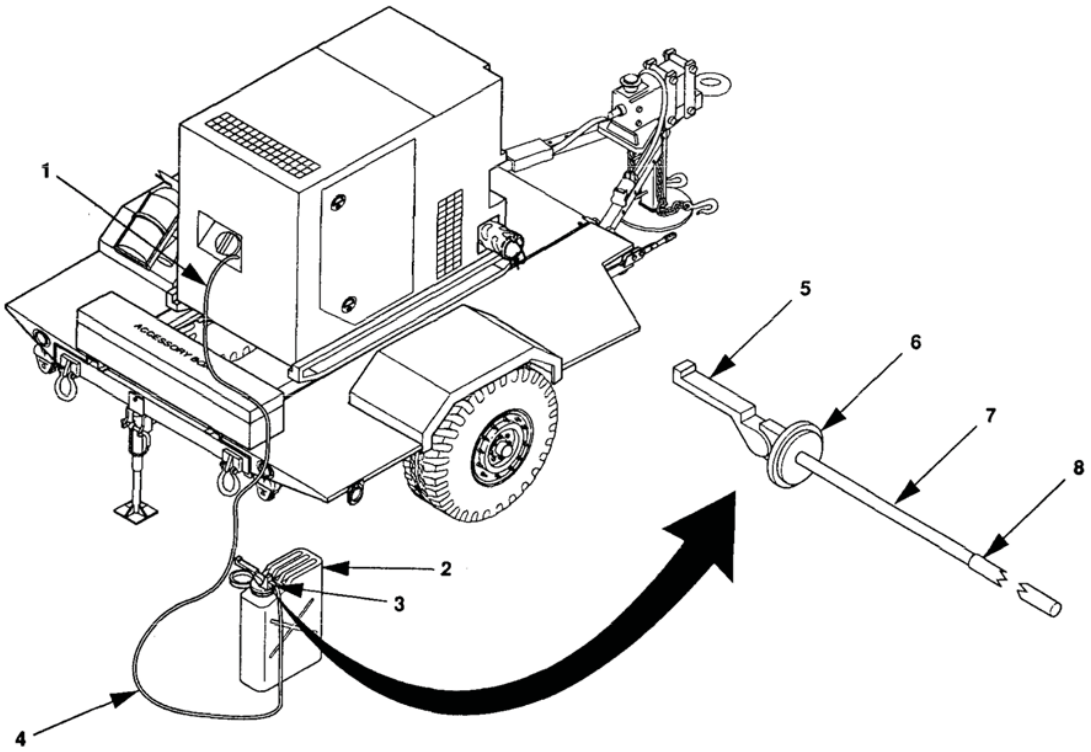

Figure 27. Disconnect Auxiliary Fuel (Typical).

END OF TASK

END OF WORK PACKAGE

OPERATOR MAINTENANCE

10 kW 60 AND 400 Hz TRAILER-MOUNTED POWER UNITS AND POWER PLANTS

OPERATION UNDER UNUSUAL CONDITIONS

INITIAL SETUP:

Tools and Special Tools
N/A

References
TB 9-6115-642-13
TM 9-6115-642-10
TM 9-6115-642-24
TM 9-2330-202-14&P (1 Ton Trailer)
TM 9-2330-213-14&P (1½ Ton Trailer)
TM 9-2330-392-14&P (Light Tactical Trailer)
Description and Use of Operator Controls and Indicators (WP 0004)
Operation Under Usual Conditions (WP 0005)
Operator Troubleshooting Procedures (WP 0008)
Expendable and Durable Items List (WP 0104)

Personnel Required
Operator (1)
91D Assistant (1)

Equipment Condition
Both Sets: Trailer Support Devices Engaged (WP 0005)
Grounded IAW (WP 0005)
Engine Control Master Switch in OFF Position (WP 0005)

UNUSUAL ENVIRONMENT / WEATHER

GENERATOR SETS

Refer to TM 9-6115-642-10.

TRAILER

Refer to TM 9-2330-202-14&P for Power Units PU-798 and PU-799, TM 92330-392-14&P for Power Units PU-798A and PU-799A, and TM 9-2330-213-14&P for Power Plants AN/MJQ-37 and AN/MJQ-38.

WINTERIZATION KIT

Refer to TM 9-6115-642-10, and TM 9-6115-642-24.

END OF WORK PACKAGE

CHAPTER 3

OPERATOR TROUBLESHOOTING PROCEDURES

FOR

10 kW 60 AND 400 Hz TRAILER-MOUNTED POWER UNITS AND POWER PLANTS

CHAPTER 3

OPERATOR TROUBLESHOOTING PROCEDURES

WORK PACKAGE INDEX

OPERATOR MAINTENANCE

10 kW 60 AND 400 Hz TRAILER-MOUNTED POWER UNITS AND POWER PLANTS

OPERATOR TROUBLESHOOTING INDEX

TROUBLESHOOTING

Generator Set

Refer to TM 9-6115-642-10.

Trailer

Refer to TM 9-2330-202-14&P for Power Units PU-798 and PU-799, and TM 9-2330-392-14&P for PU-798A and PU-799A, and TM 9-2330-213-14&P for Power Plants AN/MJQ-37 and AN/MJQ-38.

Power Plant

The following symptom index lists faults associated with switch box operation. WP 0008, Figures 1 through 5 provide a go/no-go flowchart of each malfunction. Each malfunction listed includes a reference to the applicable figure that contains a chart that will help you determine probable causes and corrective actions to take. The symptom index cannot list all faults that may occur, nor all tests or inspections and corrective actions. If a Malfunction is not listed or cannot be corrected by listed corrective actions, notify next higher level of maintenance.

WARNING

All metal jewelry can conduct electricity and become entangled in generator set components. Remove all jewelry when working on generator set. Failure to comply with this warning can cause injury or death to personnel.

WARNING

DO NOT wear loose clothing when performing checks, services and maintenance. Failure to comply with this warning can cause injury or death to personnel.

WARNING

High voltage is produced when this generator set is in operation. Make sure unit or units are completely shut down and free of any power source before attempting any repair or maintenance on the unit, switch box or when connecting or disconnecting load cables. Failure to comply with this warning can cause injury or death to personnel.

WARNING

High voltage is produced when the generator set is in operation. Never attempt to start the generator set unless it is properly grounded. Failure to comply with this warning can cause injury or death to personnel.

Malfunction/Symptom	Troubleshooting Procedure

SYMPTOM INDEX

END OF WORK PACKAGE

OPERATOR MAINTENANCE

10 kW 60 AND 400 Hz TRAILER-MOUNTED POWER UNITS AND POWER PLANTS

OPERATOR TROUBLESHOOTING PROCEDURES

INITIAL SETUP:

Test Equipment
Multimeter (WP 0101, Table 2, Item 2)

Tools and Special Tools
Tool Kit, General Mechanic's Automotive or Standard Automotive Tool Set (WP 0101, Table 2, Item 9)

References
Description and Use of Operator Controls and Indicators (WP 0004)
Operation Under Usual Conditions (WP 0005)
Operation Under Unusual Conditions (WP 0006)
PMCS Introduction (WP 0009)
PMCS (WP 0010)
Operator Maintenance: Repair or Replacement (WP 0011)
TM 9-6115-641-10

Equipment Condition
Both Sets: Trailer Support Devices Engaged (WP 0005)
Grounding of Power Unit/Power Plant (WP 0005)
Engine Control Master Switch in OFF Position (WP 0005)

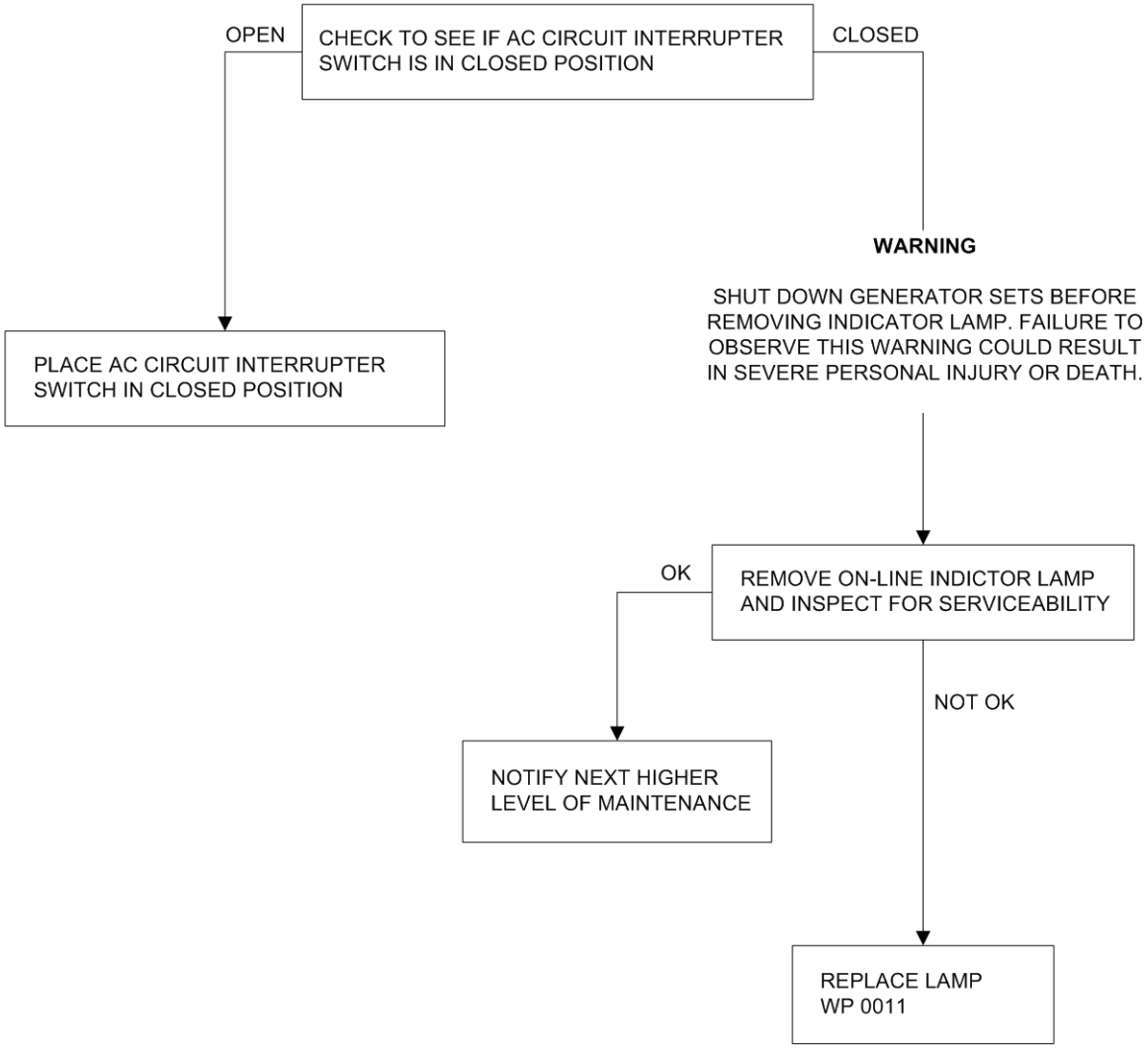

Figure 1. ON Indicator Lamp Fails to Light With Generator Set Running.

END OF TASK

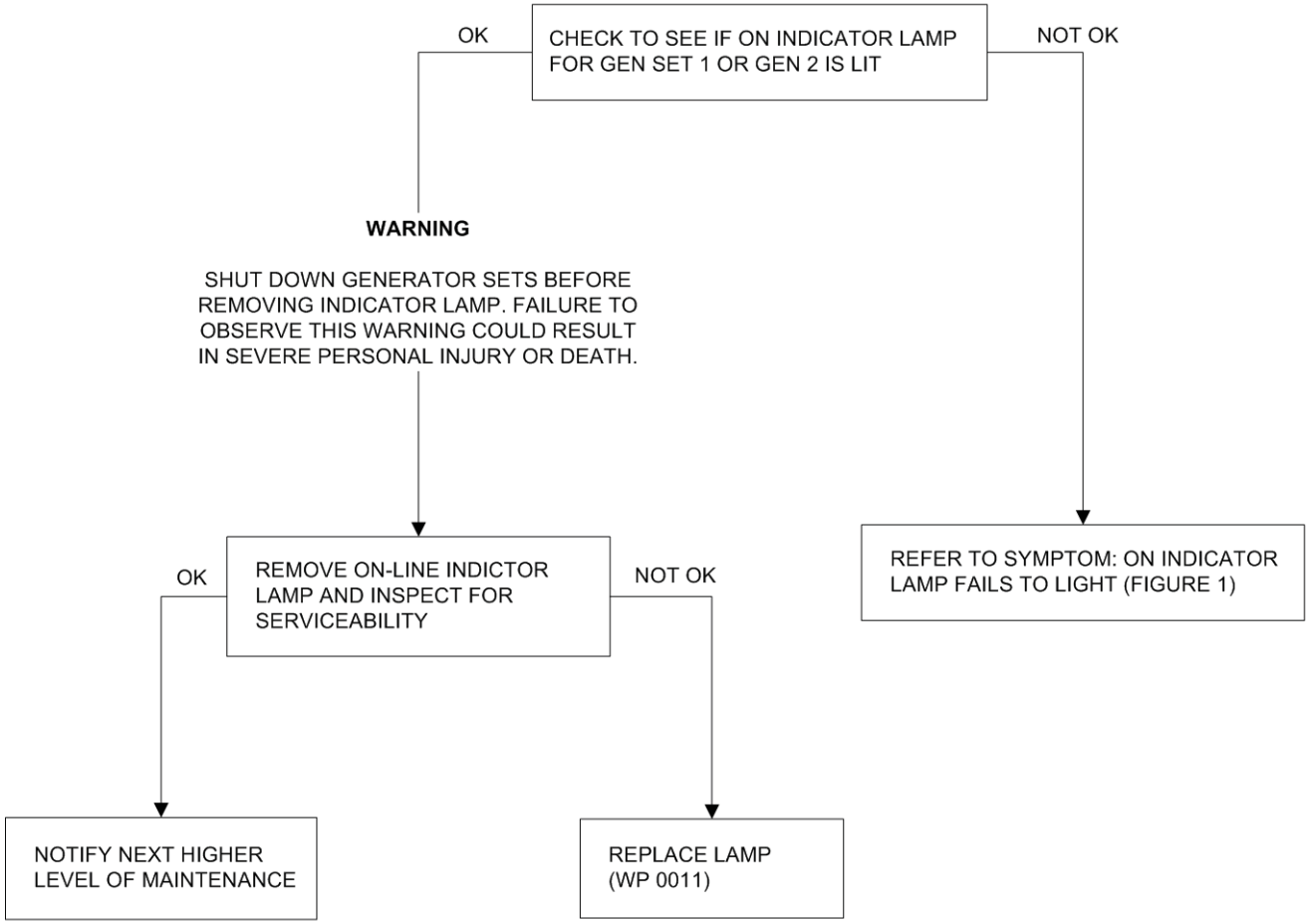

Figure 2. ON-LINE Indicator Light Lamp Fails to Light When ON/OFF Switch is Placed in ON Position.

END OF TASK

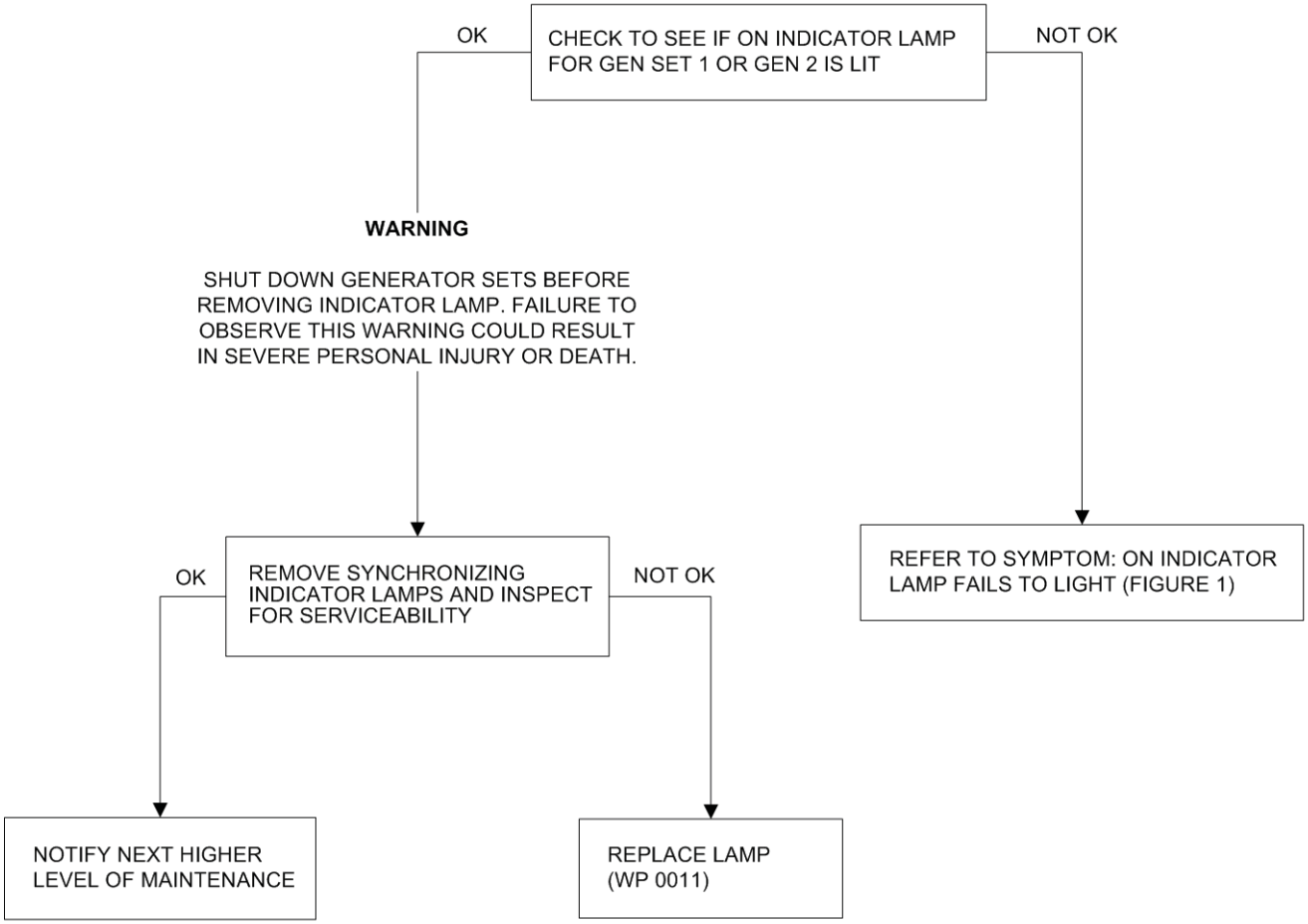

Figure 3. SYNCHRONIZING Indicator Lamps Fail to Light When TRANSFER Switch is Operated.

END OF TASK

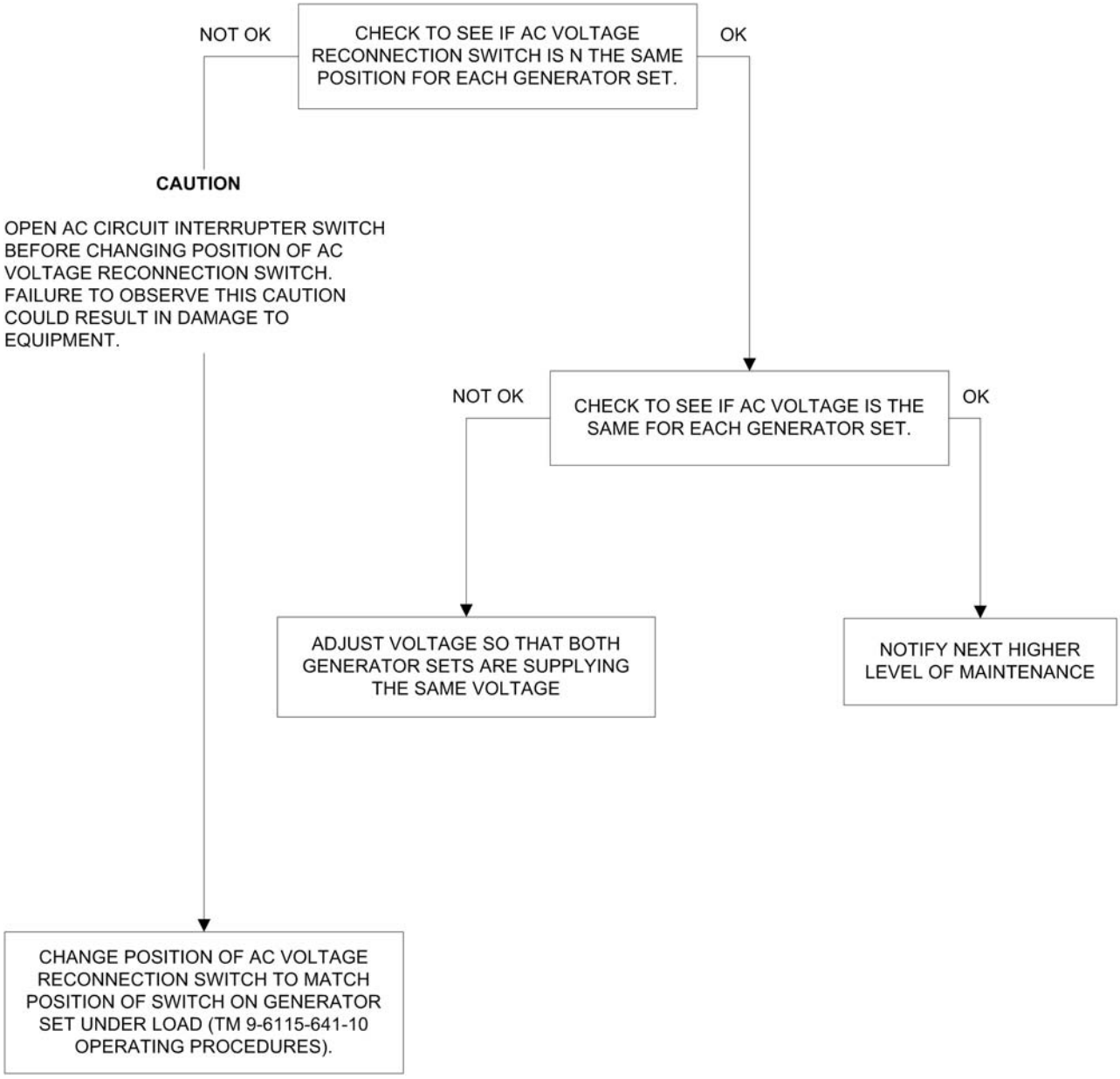

Figure 4. With All Indicator Lamps Working Properly, Load Will Not TRANSFER.

END OF TASK

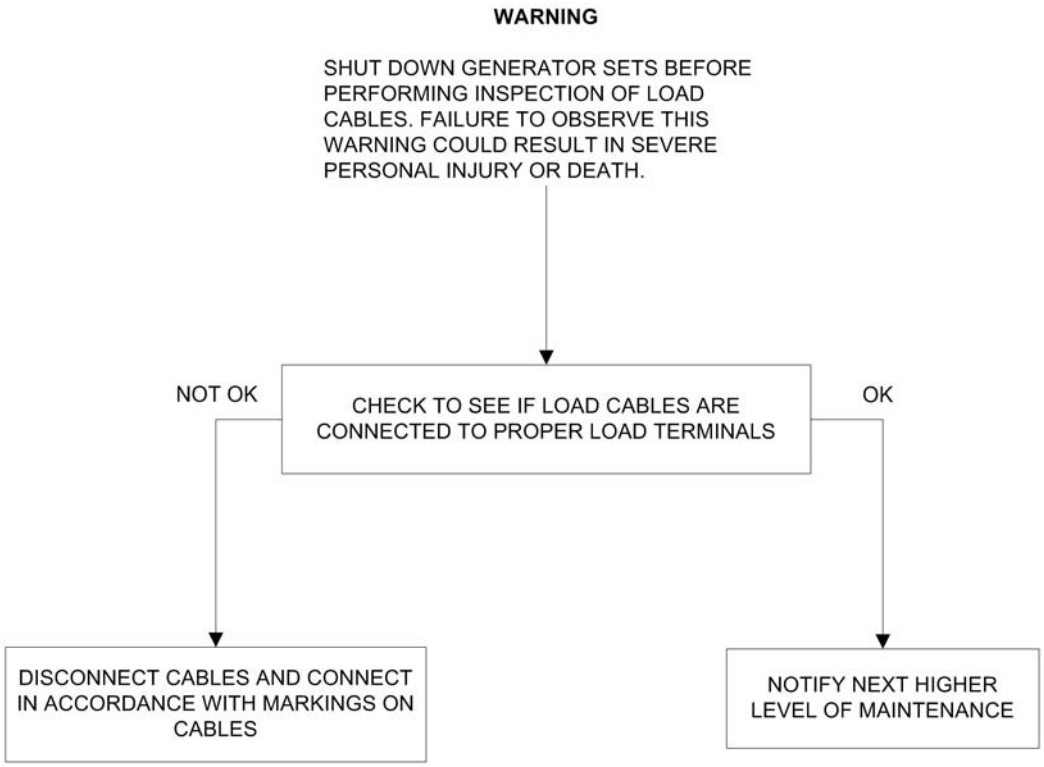

Figure 5. SYNCHRONIZING Indicator Lamps Fail to Operate in Unison When TRANSFER Switch is Operated.

END OF TASK

END OF WORK PACKAGE

CHAPTER 4

OPERATOR MAINTENANCE INSTRUCTIONS

FOR

10 kW 60 AND 400 Hz TRAILER-MOUNTED POWER UNITS AND POWER PLANTS

CHAPTER 4

OPERATOR MAINTENANCE INSTRUCTIONS

WORK PACKAGE INDEX

OPERATOR MAINTENANCE

10 kW 60 AND 400 Hz TRAILER-MOUNTED POWER UNITS AND POWER PLANTS

OPERATOR PMCS INTRODUCTION

INITIAL SETUP:

Not Applicable

INTRODUCTION TO OPERATOR PMCS TABLE

WP 0010, Table 1 (PMCS table) has been provided so you can keep your equipment in good operating condition and ready for its primary mission.

Warnings, Cautions, and Notes

Always observe the ***WARNINGS, CAUTIONS,*** and ***NOTES*** appearing in your PMCS table. Warnings and cautions appear before applicable procedures. You must observe these ***WARNINGS*** to prevent serious injury to yourself and others. You must observe ***CAUTIONS*** to prevent your equipment from being damaged. You must observe ***NOTES*** to ensure procedures are performed properly.

Explanation of Table Entries

The PMCS table is divided into five columns. Each column is explained in the following paragraphs.

Item No. Column. Numbers in this column are for reference. When completing DA Form 2404 (Equipment Inspection and Maintenance Worksheet), include the item number for the check/service indicating a fault. Item numbers also appear in the order that you must do checks and services for the intervals listed.

Interval Column. This column tells you when you must do the procedure in the procedure column. "Before" procedures must be done before you operate the power plant or power unit for its intended mission. "During" procedures must be done during the time you are operating the power plant or power unit for its intended mission. "After" procedures must be done immediately after you have operated a power plant, immediately after shutting down one of the generator sets on a power plant, or immediately after you have operated a power unit. Perform "Weekly" procedures at the listed interval.

Item to be Checked or Serviced Column. This column lists the location and the item to be checked or serviced. The item location is underlined.

Procedure Column. This column gives the procedure for checking or servicing the item listed in the location, item to check/service column. You must perform the procedure to know if the power plant or power unit is ready or available for its intended mission or operation. You must do the procedure at the time stated in the interval column.

Equipment Not Ready/Available if: Column. Information in this column tells you what faults will keep your power plant or power unit from being capable of performing its primary mission. If you make checks or services that show faults listed in this column, do not operate the power plant or power unit.

Other Table Entries

Be sure to observe all special information and notes that appear in your table.

Special Instructions

Preventive maintenance is not limited to performing the checks and services listed in the PMCS table. Covering unused receptacles, stowing unused accessories, and other routine procedures such as equipment inventory, cleaning components, and touch-up painting are not listed in the table. These are things you should do any time you see that they need to be done. If a routine check is listed in the PMCS table, it is because experience has shown that problems may occur with this item. Take along tools and cleaning cloths needed to perform the required checks and services. Use the information in the following paragraphs to help you identify problems at any time.

Trailer PMCS. Trailer checks and services in the PMCS table are described as performed on a specific model trailer. Refer to WP 0002, Table 2 to determine appropriate model number.

Generator Set PMCS. Generator set checks and services in the PMCS table are described as performed on a single generator set. The procedures must be performed on each of the generator sets that make up a power plant.

Routine Inspections. Use the following information to help identify potential problems before and during checks and Services.

WARNING

Dry cleaning solvent used to clean parts is potentially dangerous to personnel and property. Clean parts in a well-ventilated area. Avoid inhalation of solvent fumes. Wear goggles and rubber gloves to protect eyes and skin. Wash exposed skin thoroughly. Do not smoke or use near open flame or excessive heat. Failure to observe this warning could result in severe personal injury or death.

WARNING

All metal jewelry can conduct electricity and become entangled in generator set components. Remove all jewelry when working on generator set. Failure to comply with this warning can cause injury or death to personnel.

WARNING

DO NOT wear loose clothing when performing checks, services and maintenance. Failure to comply with this warning can cause injury or death to personnel.

WARNING

High voltage is produced when this generator set is in operation. Make sure unit or units are completely shut down and free of any power source before attempting any repair or maintenance on the unit, switch box or when connecting or disconnecting load cables. Failure to comply with this warning can cause injury or death to personnel.

CAUTION

Keep cleaning solvents, gasoline, and lubricants away from rubber or soft plastic parts. They will deteriorate material.

1. Keep it clean. Dirt, grease, and oil get in the way and may cover up a serious problem. Use dry cleaning solvent to clean metal surfaces.
2. Use soap and water to clean rubber or plastic parts and material.
3. Check all bolts, nuts, and screws to make sure they are not loose, missing, bent, or broken. DO not try to check them all with a tool, but look for chipped paint, bare metal, or rust around bolt heads. If you find one loose, tighten it or report it to field level maintenance.
4. Inspect welds. Look for loose or chipped paint, rust, or gaps where parts are welded together. If a broken weld is found, report it to field level maintenance.
5. Inspect electrical wires, connectors, terminals, and receptacles. Look for cracked or broken insulation, bare wires, and loose or broken connectors. Tighten loose connectors and make sure wires are in good condition. Examine terminals and receptacles for serviceability. If deficiencies are found, report them to field level maintenance.
6. Inspect hoses and fluid lines. Look for wear, damage, and leaks. Make sure that clamps and fittings are tight. Wet spots and stains around a fitting or connector can mean a leak. If a leak comes from a loose connector, or if something is broken or worn out, report it to field level maintenance.

Leakage Definitions

You must know how fluid leakage affects the status of your equipment. The following are definitions of the types/classes of leakage you need to know to be able to determine the status of your equipment, Learn and be familiar with them. When in doubt, notify supervisor.

Leakage Class	Leakage Definition
Class I	Seepage of fluid (as indicated by wetness or discoloration) not great enough to form drops.
Class II	Leakage of fluid great enough to form drops, but not enough to cause drops to drip from the item being checked/inspected.
Class III	Leakage of fluid great enough to form drops that fall from the item being checked/inspected.

Operation of Power Plant/Power Unit with Minor Leaks

CAUTION

Equipment operation is allowable with minor leakage (Class I or II) of any fluid except fuel. Fluid capacity must be considered before deciding to continue operation of the equipment with minor leaks. When operating with Class I or II leaks, fluid level must be checked more often than required by the PMCS table. Parts without fluid will stop working and or cause equipment damage.

1. Consider the equipment's capacity for the fluid that is leaking. If the capacity is small, the fluid level may soon become too low for continued operation. If in doubt, notify supervisor.
2. Check the fluid level more often than required in the PMCS table. Add fluid as needed.

Corrosion Prevention and Control (CPC)

Corrosion Prevention and Control (CPC) of Army materiel is a continuing concern. It is important that any corrosion problems with this item be reported so that the problem can be corrected and improvements can be made to prevent the problem in future items. Corrosion specifically occurs with metals. It is an electrochemical process that causes the degradation of metals. It is commonly caused by exposure to moisture, acids, bases, or salts. An example is the rusting of iron. Corrosion damage in metals can be seen, depending on the metal, as tarnishing, pitting, fogging, surface residue, and/or cracking. Plastics, composites, and rubbers can also degrade. Degradation is caused by thermal (heat), oxidation (oxygen), solvation (solvents), or photolytic (light, typically UV) processes. The most common exposures are excessive heat or light. Damage from these processes will appear as cracking, softening, swelling, and/or breaking. SF Form 368, Product Quality Deficiency Report should be submitted to the address specified in DA PAM 750-8, The Army Maintenance Management System (TAMMS) Users Manual.

Order in Which PMCS Will be Done

Figures 1, 2, and 3 in WP 0009 show the order in which you are to perform your Before operation PMCS.

NOTE

- Figure 1 is for the AN/MJQ-37 and AN/MJQ-38
- Figure 2 is for PU-798 and PU-799
- Figure 3 is for PU-798A and PU-799A
- Callouts on Figure 1 apply to both of the Power Plant generator sets.
- The item numbers in Figures 1, 2, and 3 correspond to the ITEM NO. column in WP 0010, Table 1.
- The find numbers called out in the illustrations within WP 0010, Table 1 refer only to the illustrations located within Table 1 itself.

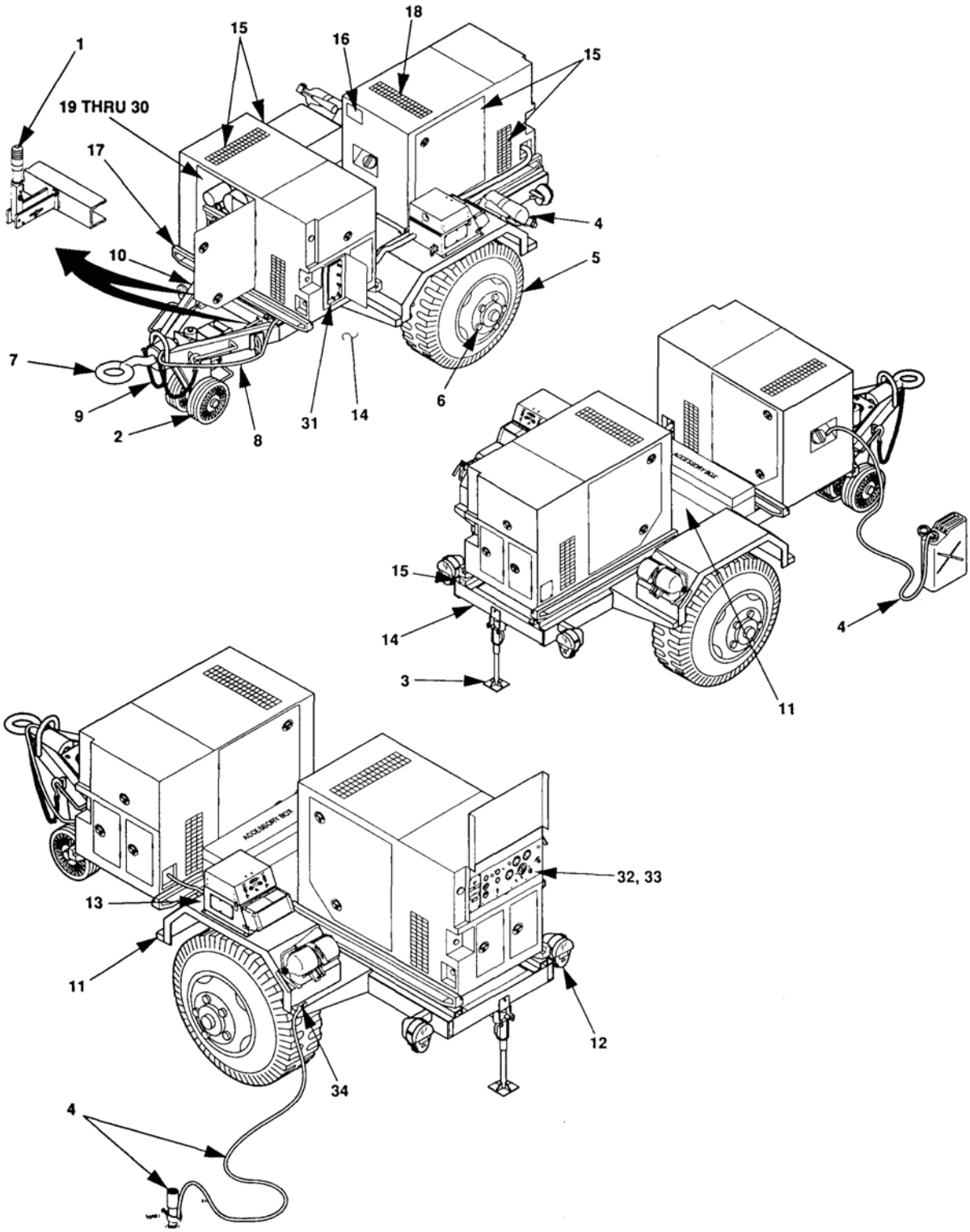

Figure 1. Power Plant AN/MJQ-37 Operator PMCS Routing Diagram.

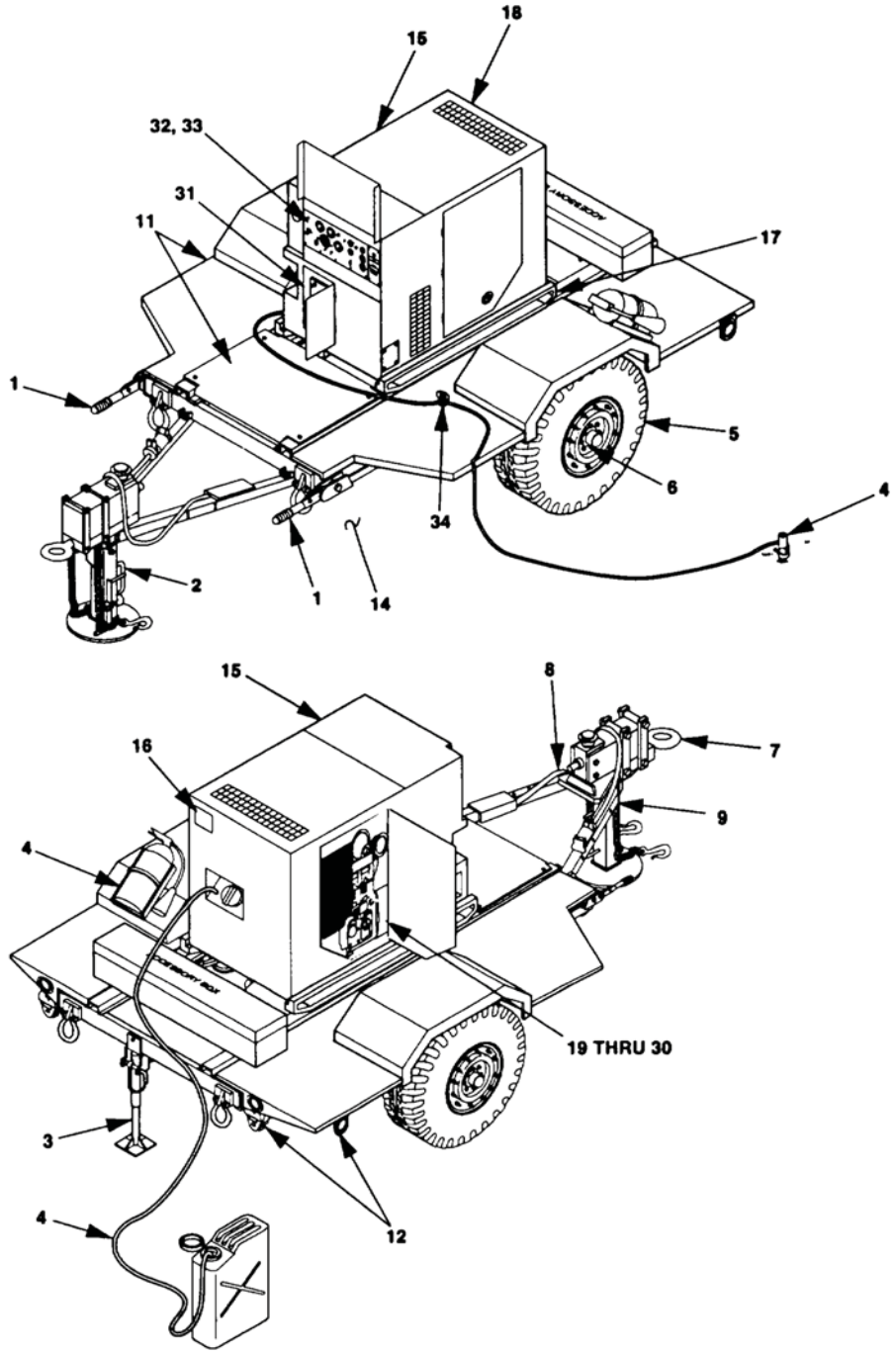

Figure 2. Power Unit Operator (PU-798 and PU-799) PMCS Routing Diagram.

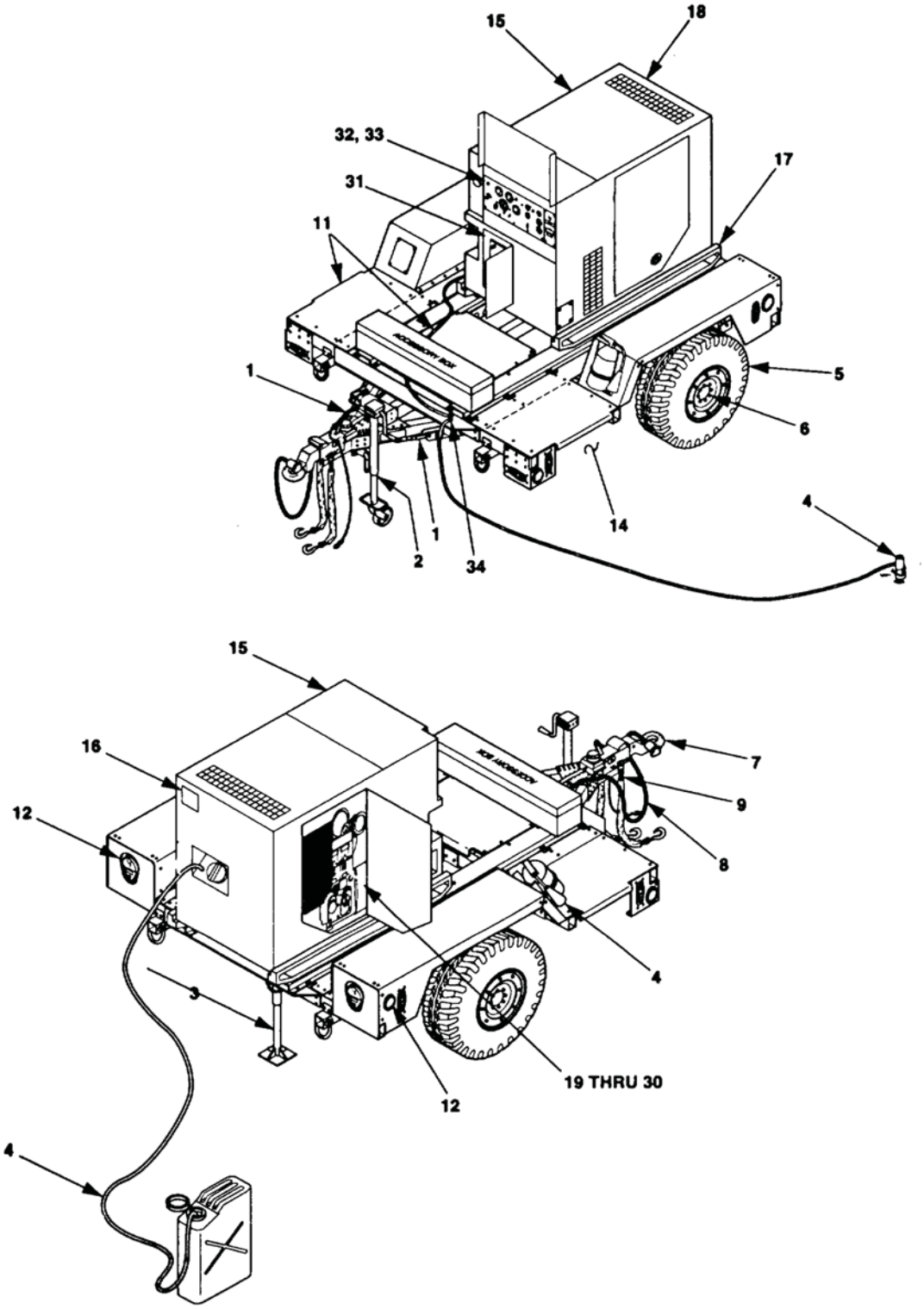

Figure 3. Power Unit Operator (PU-798A and PU-799A) PMCS Routing Diagram.

END OF WORK PACKAGE

OPERATOR MAINTENANCE

10 kW 60 AND 400 Hz TRAILER-MOUNTED POWER UNITS AND POWER PLANTS

OPERATOR PMCS, INCLUDING LUBRICATION INSTRUCTIONS

INITIAL SETUP:

Tools and Special Tools
Tool Kit, General Mechanic's Automotive or Standard Automotive Tool Set (WP 0101, Table 2, Item 9)

Materials/Parts
Oil
Coolant

References
LO 9-6115-642-12
TM 9-6115-642-10
TM 9-2330-202-14&P
TM 9-2330-392-14&P
TM 9-2330-213-14&P

Equipment Condition
Operational
Equipment Turned OFF

NOTE

If the equipment must be in continuous operation, check and service only those items that can be checked and serviced without disturbing operation. Make the complete checks and services when the equipment can be shut down. When a procedure is required for both WEEKLY and BEFORE intervals, it is not necessary to do the procedure twice if the equipment is operated during the WEEKLY period.

Table 1. Operator Preventive Maintenance Checks and Services.

ITEM NO.	INTERVAL	ITEM TO BE CHECKED OR SERVICED	PROCEDURE	EQUIPMENT NOT READY/AVAILABLE IF:
WARNING Before performing any maintenance that requires climbing on or under trailer, make sure that trailer handbrakes are set, trailer front leg is lowered, and rear leveling-support jack is lowered. Failure to observe this warning could result in severe personal injury or death from trailer suddenly rolling or tipping.				
1	Before	**TRAILER** HANDBRAKES	a. Check for proper operation of handbrake lever (1). Handbrake lever should move freely throughout its entire travel.	Handbrake lever (1 or 2) is locked in the applied position.

Table 1. Operator Preventive Maintenance Checks and Services. - Continued

ITEM NO.	INTERVAL	ITEM TO BE CHECKED OR SERVICED	PROCEDURE	EQUIPMENT NOT READY/AVAILABLE IF:
			b. Check for proper adjustment of handbrake lever (1). Handbrake lever is properly adjusted when additional force is required to move handbrake lever beyond two-thirds distance of travel toward the applied position. If improperly adjusted, refer to Step d. c. With trailer hooked to towing vehicle, set the handbrake lever (1). Move the trailer slightly to see if the handbrakes hold the wheels. If not, proceed to Step d.	
			c. With trailer hooked to towing vehicle, set the handbrake lever (1). Move the trailer slightly to see if the handbrakes hold the wheels. If not, proceed to Step d.	

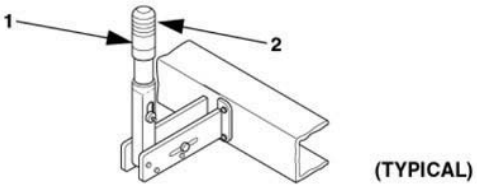

WARNING

If trailer is not coupled to towing vehicle, ensure that wheels are securely chocked. Failure to do so may cause trailer to roll, resulting in injury to personnel or damage to equipment.

NOTE

Both handbrake levers (1) are adjusted the same way. This procedure covers one handbrake lever.

			d. Handbrake Lever Adjustment (1) Release handbrake lever (1). (2) Turn adjustment knob (2) clockwise to tighten or counterclockwise to loosen. If unable to adjust, or adjustment has been used up, refer to field level maintenance. (3) Check adjustment (Refer to Step b). Repeat Steps (1) and (2) as required. Repeat Step c.	

Table 1. Operator Preventive Maintenance Checks and Services. - Continued

ITEM NO.	INTERVAL	ITEM TO BE CHECKED OR SERVICED	PROCEDURE	EQUIPMENT NOT READY/AVAILABLE IF:
2	Before	LANDING LEG ASSEMBLY	a. With trailer connected to towing vehicle, check landing leg assembly (3) for ease of operation. b. Check landing leg assembly (3) for proper mounting, alignment, and general condition. c. Ensure landing leg assembly (3) can be locked in stored and support positions. d. Ensure locking lever (4) moves freely. e. Ensure landing leg foot or wheels (5) can be adjusted up and down.	Landing leg assembly will not secure in stored position or will not support trailer.
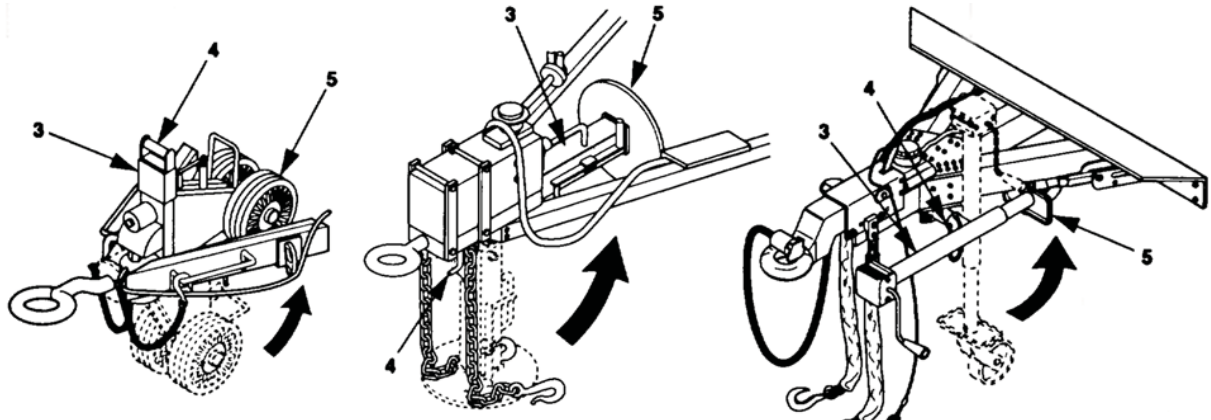 (AN/MJQ-37 AND AN/MJQ-38) (PU-798 AND PU-799) (PU-798A AND PU-799A)				
3	Before	REAR LEVELING-SUPPORT JACK	a. Check rear leveling-support jack (6) for ease of operation. b. Check rear leveling-support jack (6) for secure mounting. c. Ensure rear leveling-support jack can be locked in stored and support positions. d. Ensure locking pin (7) is attached to leg with chain (8). e. Ensure leveling-support jack foot can be adjusted up and down.	Rear support leg will not secure in stored position or will not support trailer.
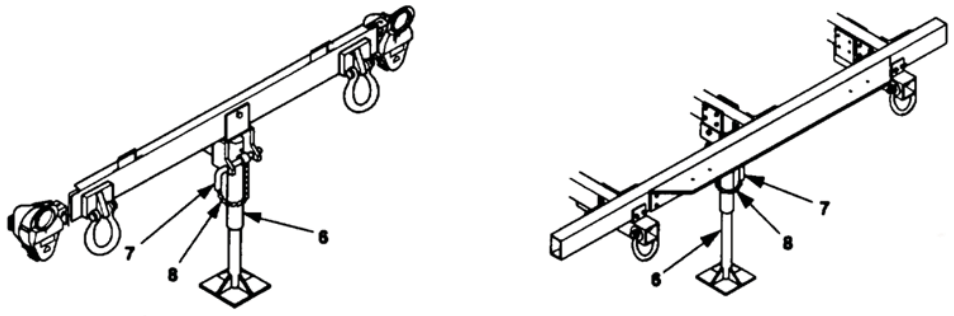 AN/MJQ-37 AND AN/MJQ-38 PU-798 AND PU-799 P-798A AND PU-799A				

Table 1. Operator Preventive Maintenance Checks and Services. - Continued

ITEM NO.	INTERVAL	ITEM TO BE CHECKED OR SERVICED	PROCEDURE	EQUIPMENT NOT READY/AVAILABLE IF:
4	Before	ACCESSORIES	Check that following accessories are not missing or damaged: • Auxiliary fuel hose(s) (stored in storage box inside right access door under control box on generator). • Fire extinguisher(s), check seal (stored in fire extinguisher bracket on fender). • Check accessory box for damage or missing parts.	 Fire extinguisher is missing, seal is broken.
			NOTE Remaining accessories are stored in accessory box.	
			• Container adapter • Ground rod • Hammer, 8 lb • Load terminal wrench • Slide hammer • Ground cable	
5	Before	TIRES	a. Check tires (9) for cuts, bruises, bulges, or unusual tread wear. Remove any foreign objects from between treads.	One tire is missing or unserviceable.
			b. Check tire pressure when tires are cool, as follows:	Tire will not hold air pressure.

	Power Plant	Power Unit
	AN/MJQ-37	AN/MJQ-37
	AN/MJQ-38	PU-799
		PU-798A
		PU-799A
Highway	35 psi (241.3 kPa)	35 psi (241.3 kPa)

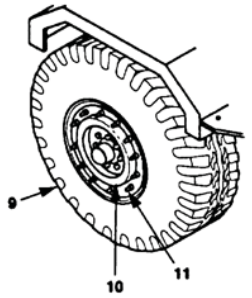

(PU-798 AND PU-799)
(PU-798A AND PU799A)

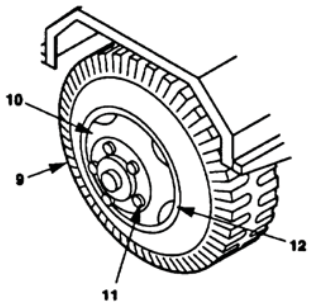

(AN/MJO-37 AND AVMJQ-38)

Table 1. Operator Preventive Maintenance Checks and Services. - Continued

ITEM NO.	INTERVAL	ITEM TO BE CHECKED OR SERVICED	PROCEDURE	EQUIPMENT NOT READY/AVAILABLE IF:
6	Before	WHEELS	a. Check wheels (10) for damage. b. Check if stud nuts (11) are loose or missing.	Wheel is damaged. One stud nut is loose or missing.
			WARNING Do not attempt to seat a lockring when tire is inflated. Improperly seated lockring could fly off. Serious injury or death will result.	
			c. Model AN/MJQ-37 and AN/MJQ-38 only, check for proper mounting of wheel assembly lockring (12).	Lockring not properly seated.
7	Before	DRAWBAR RING	Check drawbar ring (13) for secure mounting and obvious damage.	Ring is loose or bent.
			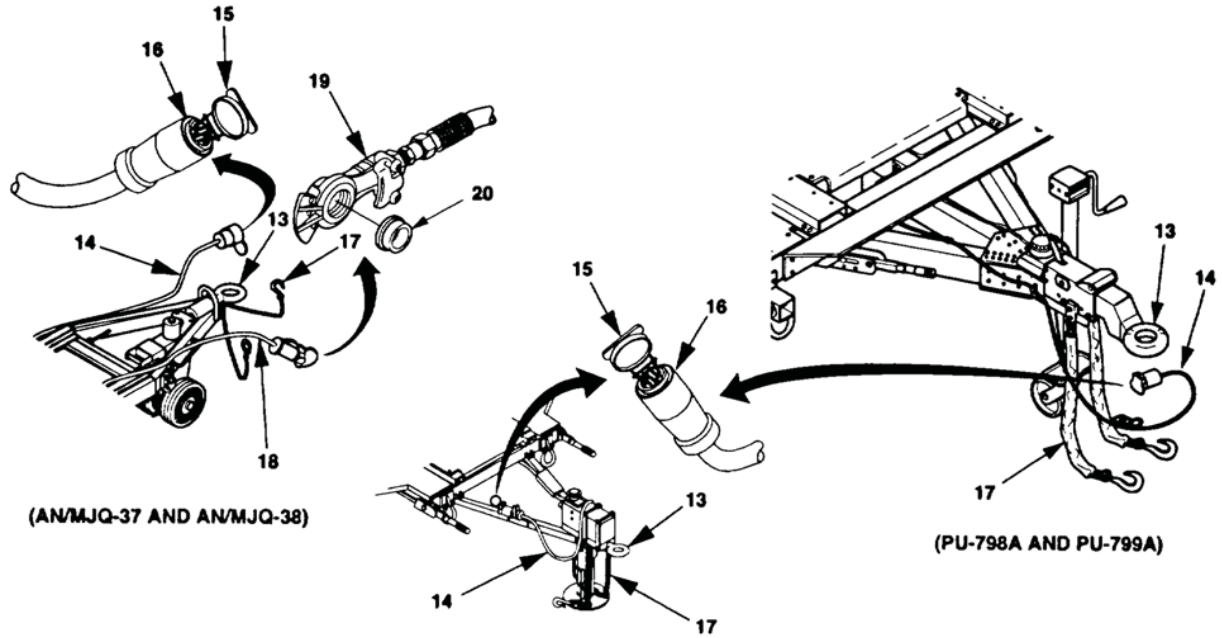	
8	Before	INTERVEHICULAR CABLE	a. Check intervehicular cable (14) for cuts and breaks. b. Open protective cover (15) Inspect for broken, missing, and burnt pins (16).	Cable is severed or missing.
9	Before	SAFETY CHAINS	Check safety chains (17) for secure mounting and obvious damage.	Chain is missing or unsecured.
10	Before	AIR HOSE AND COUPLER (AN/MJQ-37 AND AN/MJQ-38 ONLY)	a. With trailer hooked to towing vehicle, check air hose (18) for leaks, cuts, and abrasions.	Air leaks are found or hose is cut deep enough for cords to show.

Table 1. Operator Preventive Maintenance Checks and Services. - Continued

ITEM NO.	INTERVAL	ITEM TO BE CHECKED OR SERVICED	PROCEDURE	EQUIPMENT NOT READY/AVAILABLE IF:
			b. Check coupler body (19) for damage Check if seal (20) is missing or damaged.	Coupler body is cracked or broken. Seal is missing.
11	Before	FENDERS AND PLATFORMS	Check for damaged, loose, or missing hardware.	Damage is to extent where it poses a safety hazard or prevents trailer from being towed.
12	Before	LIGHTS AND REFLECTORS	a. Check for obvious damage or looseness of lights, lenses, and reflectors.	Lights are not serviceable.
			NOTE An assistant is required while checking the brake lights.	
			b. Connect the intervehicular cable (21) to the towing vehicle. c. Operate the vehicle light switch through all settings and check the lights (22). d. Check for damage and presence of reflectors (23).	
			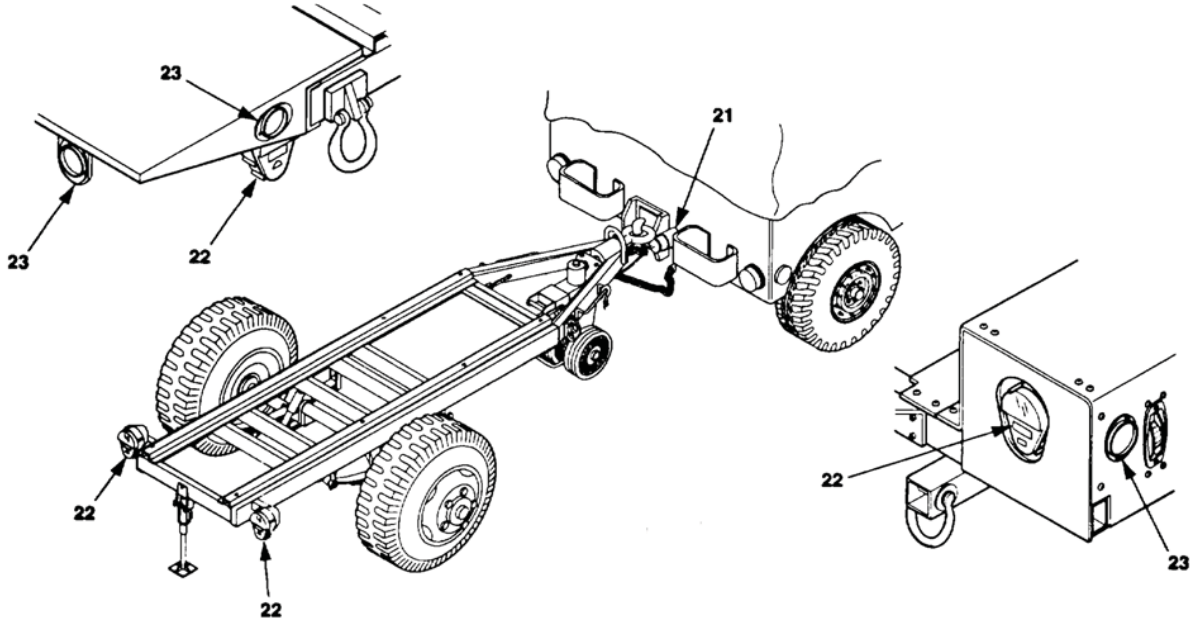	
13	Before	SWITCH BOX ASSEMBLY (AN/MJQ-37 AND AN/MJQ-38 ONLY)	a. Check for loose or missing mounting hardware.	Two or more mounting bolts are missing.
			b. Check for damaged indicator lights.	Indicator lights are damaged.

Table 1. Operator Preventive Maintenance Checks and Services. - Continued

ITEM NO.	INTERVAL	ITEM TO BE CHECKED OR SERVICED	PROCEDURE	EQUIPMENT NOT READY/AVAILABLE IF:
			c. Check hinges and clamping catches. d. Check for loose or damaged switches. e. Check output terminals and connectors for damaged or missing hardware.	 Switches loose or damaged. Output terminals or connectors will not properly secure load cables. Cable is missing or broken.
14	Before	HYDRAULIC BRAKES	Check for leakage of brake fluid from master cylinder (24), hydraulic brake lines and fittings (25), and backing plates (26).	Brake system any leak.

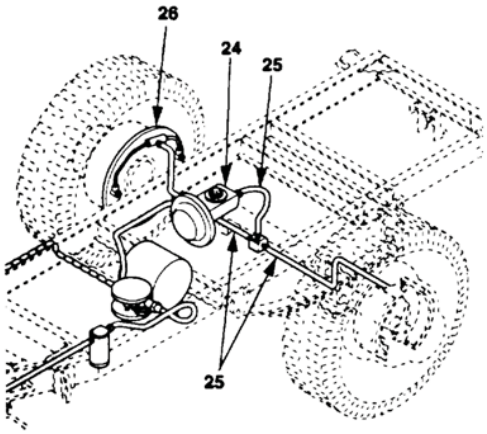

(AN/MJQ-37 AND AN/MJQ-38)

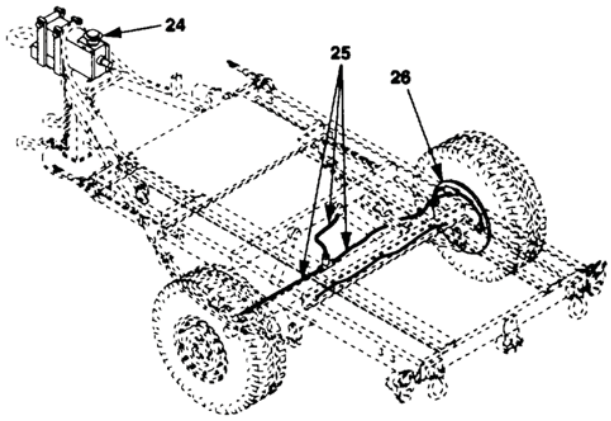

(PU-798 AND PU-799)
(PU-798A AND PU-799A)

		GENERATOR SET ASSEMBLY		

NOTE

If the equipment must be kept in continuous operation, check and service only those items that can be checked and serviced without disrupting operations. Complete all checks and services when equipment is shut down.

15	Before	HOUSING	a. Check doors (27), panels (28), hinges (29), and latches (30) for damaged, loose, or corroded items. b. Inspect air intake and exhaust grills (31) for debris.	Cannot secure door.
		NOTE Check all data plates.		
16	Before	IDENTIFICATION PLATES	Check to ensure identification plates (32) are secure and legible.	

Table 1. Operator Preventive Maintenance Checks and Services. - Continued

ITEM NO.	INTERVAL	ITEM TO BE CHECKED OR SERVICED	PROCEDURE	EQUIPMENT NOT READY/AVAILABLE IF:
17	Before	SKID BASE	Inspect skid base (33) for cracks and corrosion.	Skid base is cracked or shows signs of structural damage.
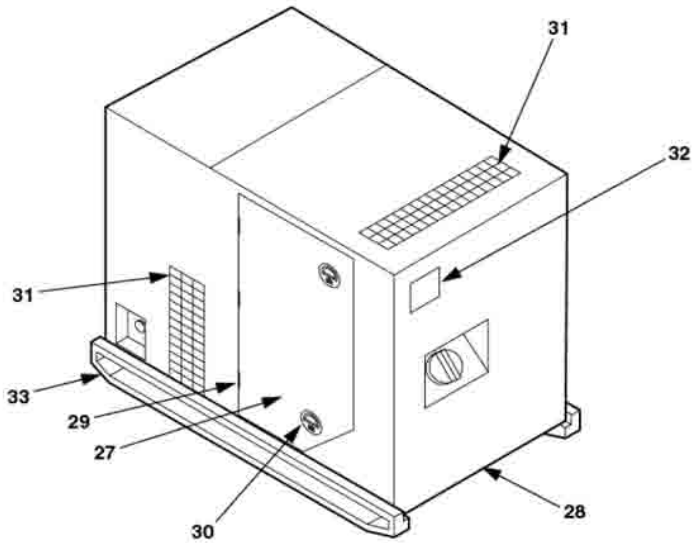				
18	Before	ACOUSTICAL MATERIAL	Ensure acoustical materials, located in the grill areas and under the engine, are secure, not damaged, or missing.	
WARNING With any access door open, the noise level of this generator set when operating could cause hearing damage. Hearing protection must be worn when working near the generator set while running. Failure to comply with this warning could result in personal injury or loss of hearing. **WARNING** The fuels used in this generator set are highly flammable. DO NOT smoke or use open flame when performing maintenance. Flames and explosion can occur, resulting in severe personal injury or death.				
19	Before	ENGINE ASSEMBLY	Check for loose or damaged hard-ware.	

Table 1. Operator Preventive Maintenance Checks and Services. - Continued

ITEM NO.	INTERVAL	ITEM TO BE CHECKED OR SERVICED	PROCEDURE	EQUIPMENT NOT READY/AVAILABLE IF:
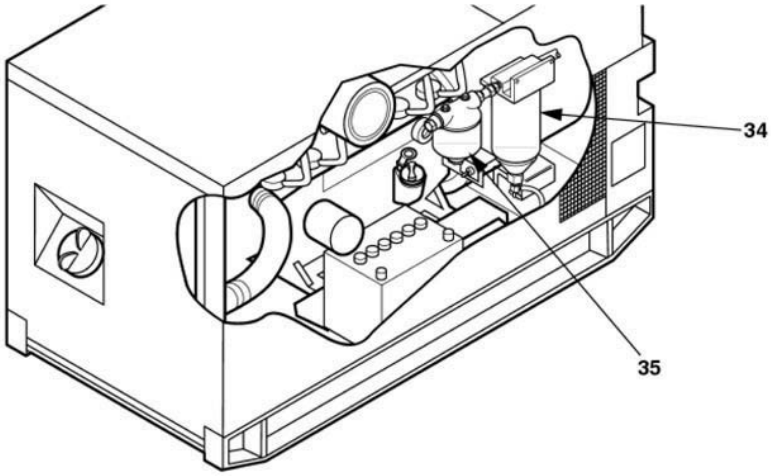				
20	Before	FUEL SYSTEM	Inspect for leaks, damaged, loose, or missing hardware.	Any fuel leaks, damaged, loose, or missing parts.
21	Before	FUEL FILTER/WATER SEPARATOR	a. Inspect fuel filter/water separator (34) and fuel filter (35) for leaks, proper mounting, cracks, damage, or missing parts. b. Drain water from fuel filter/water separator (34).	Any fuel leaks.
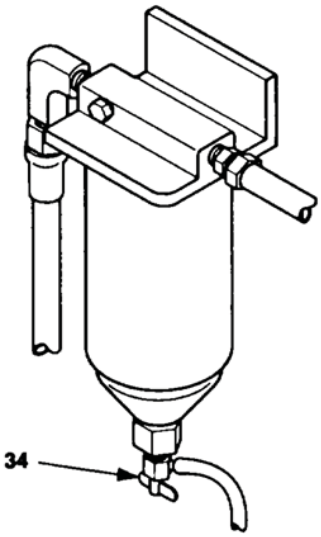				
22	Before	LUBRICATION SYSTEM	a. Inspect lubrication system for leaks, damaged, loose, or missing parts. b. Check oil level (36). Add oil as necessary. c. Check engine oil for contamination.	Class III leaks, damaged, loose, or missing parts. Engine oil shows signs of contamination.

Table 1. Operator Preventive Maintenance Checks and Services. - Continued

ITEM NO.	INTERVAL	ITEM TO BE CHECKED OR SERVICED	PROCEDURE	EQUIPMENT NOT READY/AVAILABLE IF:
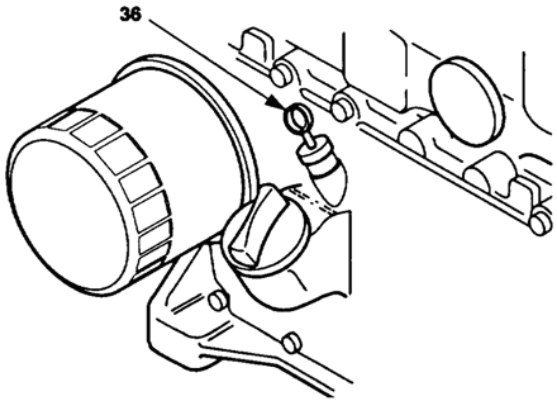				
WARNING Be very careful to avoid contact with high-pressure steam and liquid. Cooling system operates at high temperatures. Personal injury or death from burns or scalding can result from contact.				
23	Before	RADIATOR	Check radiator (37) for leaks, damaged, or missing parts.	Class III leaks. Radiator cap missing.
24	Before	HOSES	Check hoses (38) for leaks and cracks.	Class III leaks.
25	Before	COOLING FAN	Check fan (39) for damage or loose-ness.	Damaged or loose.
26	Before	FAN BELT	Inspect belt (40) for cracks, fraying, or looseness.	Broken belt.
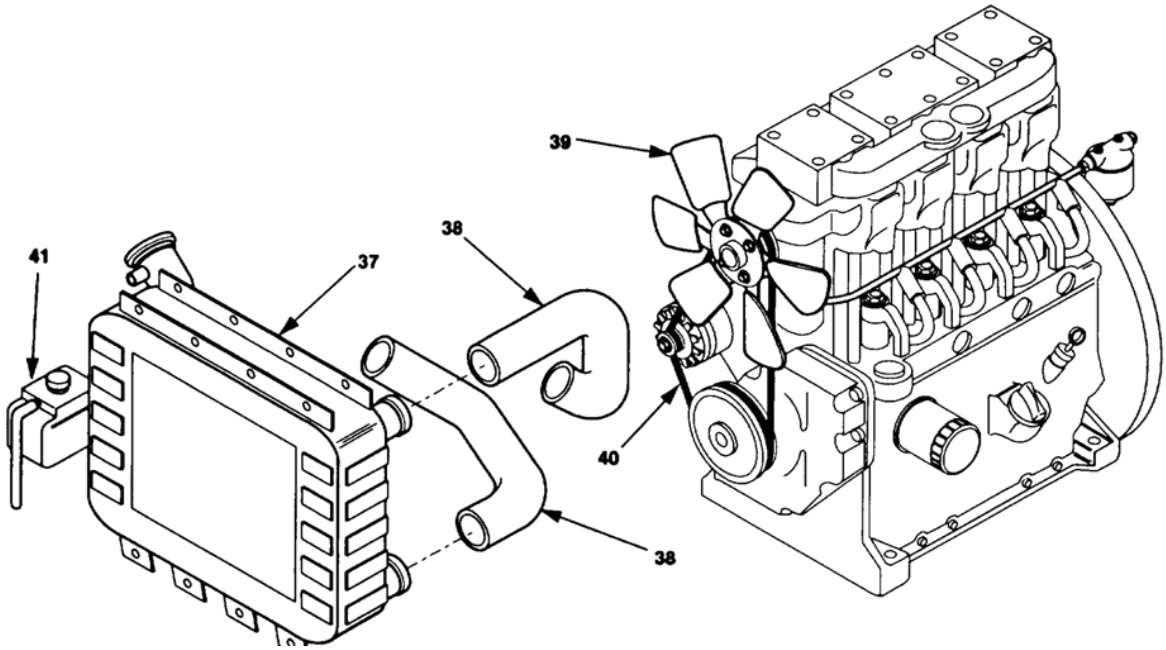				
27	Before	OVERFLOW BOTTLE	Check overflow bottle (41) for leaks or missing parts.	Class III leaks. Check coolant level.

Table 1. Operator Preventive Maintenance Checks and Services. - Continued

ITEM NO.	INTERVAL	ITEM TO BE CHECKED OR SERVICED	PROCEDURE	EQUIPMENT NOT READY/AVAILABLE IF:
WARNING Exhaust discharge contains deadly gases. DO NOT operate generator set in enclosed areas unless exhaust discharge is properly vented outside. Failure to observe this warning could result in severe personal injury or death due to carbon monoxide poisoning.				
28	Before	EXHAUST SYSTEM	Check muffler (42) for leaks and exhaust system for corrosion, damaged, or missing parts.	Muffler or exhaust system damaged or leaking.
29	Before	AIR CLEANER ASSEMBLY	a. Inspect air cleaner assembly (43) and piping (44) for loose or damaged connections. b. Inspect restriction indicator (45) for clogged element. If indicator shows red, notify next higher level of maintenance.	Loose or missing parts. Clogged element is indicated or piping and connections are loose.
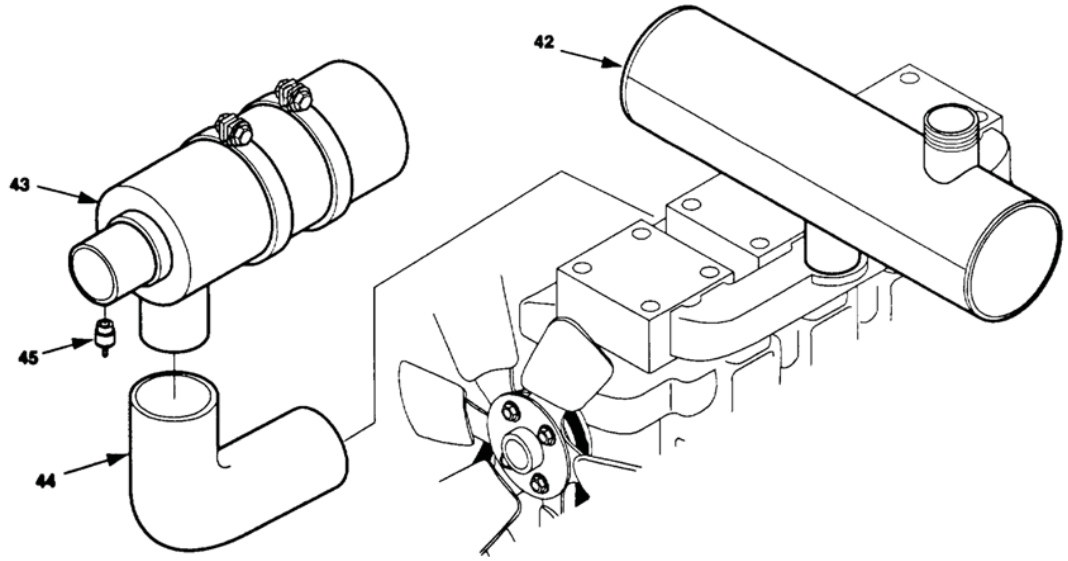				
WARNING Avoid contact with battery. Battery acid can cause burns to unprotected skin. **WARNING** Batteries give off a flammable gas. DO NOT smoke or use open flame when performing maintenance on batteries. Flames and explosion could result in severe personal injury or death.				
30	Before	BATTERY CABLES	Inspect cables and connectors for corrosion, damage, loose, or missing parts.	Cables are loose, damaged, or missing.
WARNING DO NOT touch live voltage connections. High voltage is produced when this generator set is operating. Failure to observe this warning could result in severe personal injury or death by electrocution.				

Table 1. Operator Preventive Maintenance Checks and Services. - Continued

ITEM NO.	INTERVAL	ITEM TO BE CHECKED OR SERVICED	PROCEDURE	EQUIPMENT NOT READY/AVAILABLE IF:
31	Before	OUTPUT BOX ASSEMBLY	a. Check for loose or damaged wiring or cables. b. Check output terminals for damage or missing hardware.	Loose or damaged wiring or cables. Damaged or missing hardware.
32	Before	CONTROLS AND INDICATORS	a. Check all indicators and controls for damage or missing parts. b. Press PUSH TEST RESET LAMPS button (46) on fault indicator. All lights must light.	Indicators or controls damaged or missing.
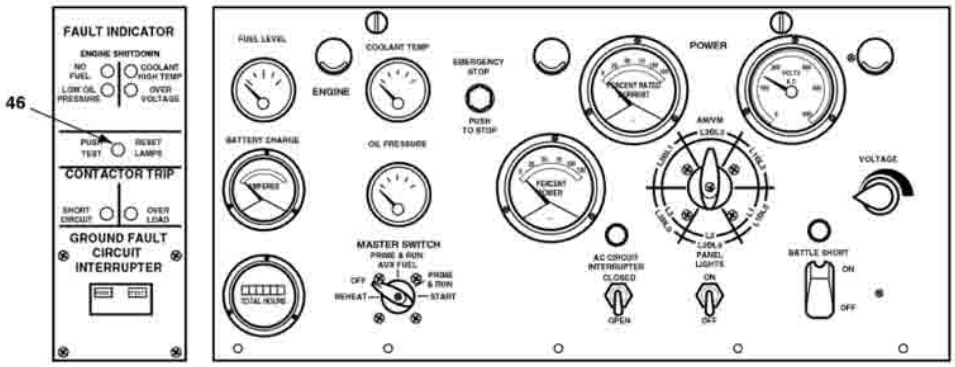 (TYPICAL)			
33	Before	CONTROL BOX HARNESS	Check inside control box for loose or damaged wiring.	Loose or damaged wiring.
34	Before	GROUND ROD CABLE AND CONNECTIONS	a. Inspect for damage, corrosion, and loose connections. b. Inspect ground rod and cable for loose connections, breaks, damage and corrosion.	Cable is missing or damaged.
WARNING High voltage is produced when this generator set is in operation. Improper operation could result in severe personal injury or death.				
35	During	**TRAILER** OPERATION	a. Be alert for any unusual noises while towing the trailer. Stop and investigate any unusual noises. b. Ensure that the trailer is tracking/following correctly behind towing vehicle with no side pull.	Brakes locked-up
36	During	SWITCH BOX ASSEMBLY	Check indicator lights. Ensure indicator lights are operating properly.	

Table 1. Operator Preventive Maintenance Checks and Services. - Continued

ITEM NO.	INTERVAL	ITEM TO BE CHECKED OR SERVICED	PROCEDURE	EQUIPMENT NOT READY/AVAILABLE IF:
37	During	**GENERATOR SET ASSEMBLY** HOUSING	a. Check doors, panels, hinges, and clamping catches for damaged, loose, or door. corroded items. b. Inspect air intake and exhaust grills for debris.	Cannot secure door. Grills plugged or flow cut off.
38	During	ENGINE ASSEMBLY FUEL SYSTEM	Check for loose, damaged, or missing parts.	Any fuel leaks, and damaged or loose parts.
39	During	FUEL SYSTEM	Inspect for leaks, and damaged, loose, or missing parts.	Any fuel leaks, and damaged or loose parts.
40	During	LUBRICATION SYSTEM	Inspect for leaks, and damaged, loose, or missing parts.	Class III leaks, and damaged, or loose parts.
41	During	COOLING FAN	Listen for unusual noise in fan area.	
42	During	CONTROLS AND INDICATORS	Observe the following indicators and ensure they are operating properly.	Frequency or AC volt-meter inoperative.
			COOLANT TEMP. 170-200 °F (77-93 °C) OIL PRESSURE 25-60 psi (172- 414 kPa) FREQUENCY 60 Hz (AN/MJQ-37, PU-798, and PU-798A) 400 Hz (AN/MJQ-38, PU-799, and PU-799A) VOLTAGE 120-240 VAC	
			WARNING Top housing panels and exhaust system can get very hot. When performing DURING PMCS, wear gloves and additional protective clothing as required. Failure to comply with this warning can cause severe burns and injury to personnel.	
43	During	GROUND ROD CABLE AND CONNECTIONS	Inspect ground rod and cable for loose connections, breaks, damage and corrosion.	Cable is missing or damaged.
			WARNING High voltage is produced when the generator set is in operation. DO NOT touch live voltage connections. Never attempt to connect or disconnect load cables while the generator set is running. Failure to comply with this warning can cause injury or death to personnel.	

Table 1. Operator Preventive Maintenance Checks and Services. - Continued

ITEM NO.	INTERVAL	ITEM TO BE CHECKED OR SERVICED	PROCEDURE	EQUIPMENT NOT READY/AVAILABLE IF:
44	After	HOUSING	a. Check doors, panels, hinges, and clamping catches for damaged, loose, or door. corroded items. b. Inspect air intake and exhaust grills for debris.	Cannot secure doors.
45	After	IDENTIFICATION PLATES	Check to ensure identification plates are secure.	
46	After	SKID BASE	Inspect skid base for cracks and corrosion.	Skid base is cracked or shows signs of structural damage.
WARNING DO NOT touch live voltage connections. High voltage is produced when this generator set is operating. Failure to observe this warning could result in severe personal injury or death by electrocution.				
47	After	ENGINE ASSEMBLY	Check for loose, damaged, or missing hardware.	
48	After	FUEL SYSTEM	Inspect fuel system for leaks, and damaged, loose, or missing hardware.	
49	After	FUEL FILTER/WATER SEPARATOR	a. Inspect fuel filter/water separator and fuel filter for leaks, proper mounting, cracks, damage, or missing parts. b. Drain water from fuel filter/water separator.	Any fuel leaks.
50	After	LUBRICATION SYSTEM	a. Inspect lubrication system for leaks, damaged, loose, or missing parts. b. Check oil level. c. Check engine oil for contamination.	Class III leaks, damaged, loose, or missing parts. Oil level is below add level. Engine oil shows signs of contamination.
WARNING Be very careful to avoid contact with high-pressure steam and liquid. Cooling system operates at high temperatures. Personal injury or death from burns or scalding can result from contact.				
51	After	RADIATOR	Check radiator for leaks, damaged, or missing parts.	Class III leaks. Radiator cap missing.
52	After	HOSES	Check hoses for leaks and cracks.	Class III leaks.
53	After	FAN BELT	Inspect belt for cracks, fraying, or looseness.	Broken belt.

Table 1. Operator Preventive Maintenance Checks and Services. - Continued

ITEM NO.	INTERVAL	ITEM TO BE CHECKED OR SERVICED	PROCEDURE	EQUIPMENT NOT READY/AVAILABLE IF:
54	After	OVERFLOW BOTTLE	Check overflow bottle for leaks or missing parts.	Class III leaks. Check coolant level. Coolant level is below cold line.
55	After	**CONTROL BOX ASSEMBLY** CONTROLS AND INDICATORS	Check all controls and indicators for damaged or missing parts.	Controls or indicators damaged or missing.
56	After	**TRAILER** SWITCH BOX ASSEMBLY (AN/MJQ-37 AND AN/MJQ-38 ONLY)	a. Check for loose or missing mounting hardware.	Two or more mounting bolts are missing.
			b. Check for damaged indicator lights.	Indicator lights are damaged.
			c. Check hinges and clamping catches.	
			d. Check for loose or damaged switches.	Switches loose or damaged.
			e. Check output terminals and connectors for damaged or missing hardware.	Output terminals or connectors will not properly secure load cables.

MANDATORY REPLACEMENT PARTS LIST

There are no replacement parts required for these PMCS procedures.

OPERATOR LUBRICATION INSTRUCTIONS

Lubrication instructions for the generator set and engine are contained in LO 9-6115-642-12. Lubrication instructions for the trailers are contained in TM 9-2330-202-14&P for Power Units PU-798 and PU-799, TM 9-2330-392-14&P for PU-798A and PU-799A, and TM 9-2330-213-14&P for Power Plants AN/MJQ-37 and AN/MJQ-38.

END OF WORK PACKAGE

OPERATOR MAINTENANCE

10 kW 60 AND 400 Hz TRAILER-MOUNTED POWER UNITS AND POWER PLANTS

ON, ON-LINE, AND SYNCHRONIZING LAMPS: REPLACEMENT, REMOVE

INITIAL SETUP:

References

Operator Troubleshooting Procedures (WP 0008, Figure 3)
Operator PMCS, Including Lubrication Instructions (WP 0010)
TM 9-6115-642-10

GENERATOR SET

Refer to TM 9-6115-642-10.

POWER PLANT

The maintenance functions that the Maintenance Allocation Chart authorizes the operator to perform are the preventive maintenance checks and services listed in WP 0010, Table 1, and the replacement of indicator lamps located on the switch box. Perform the following steps to replace ON, ON-LINE, and SYNCHRONIZING indicator lamps:

REPLACEMENT

WARNING

A qualified technician must make the power connections and perform all continuity checks. The power source may be a generator or commercial power. Failure to comply with this warning can cause injury or death to personnel.

WARNING

Shut down generator sets before removing indicator lamp. Failure to comply with this warning can cause injury or death to personnel.

1. Unscrew lens from lamp housing and remove lamp from lens ON (Figure 1, Item 2) and ON-LINE (3) lamps or entire housing for SYNCHRONIZING (1) lamps.
2. Install new lamp in housing for SYNCHRONIZING (1) or install lens and screw lens on for ON (2) and ON-LINE (3) lamps.

END OF TASK

REMOVAL

NOTE

Removal during mission. In the event that the right front and rear SYNCHRONIZING bulbs do not light during the TRANSFER procedure and the mission cannot be terminated to check the bulbs as described in WP 0008, Figure 3, the bulbs will have to be removed as follows with one set running:

NOTE

Failure to maintain the rear bulb operational will cause the switch box to TRANSFER load at any time, throwing both generator sets off line.

1. Shut the on coming generator down, to remove power from the switchbox.
2. Remove the SYNCHRONIZING (1) bulb(s), and replace the burned out bulb(s) with new, if available and proceed with TRANSFER.
3. If no spare bulbs are available, swap the left front bulb with the burned out bulb and proceed with the TRANSFER.

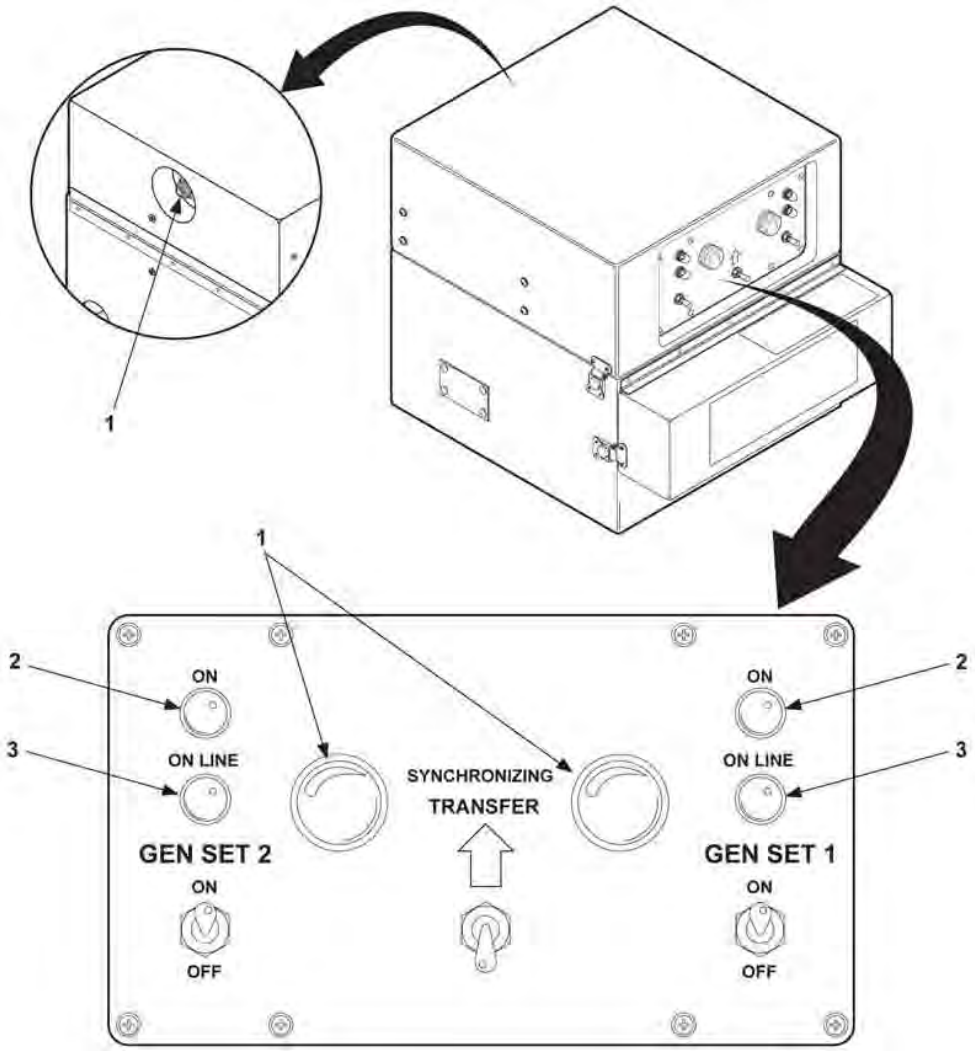

LEGEND

1 SYNCHRONIZING INDICATOR LAMPS
2 ON INDICATOR LAMPS
3 ON-LINE INDICATOR LAMPS

Figure 1. ON, ON-LINE, and SYNCHRONIZING Lights (New Configuration).

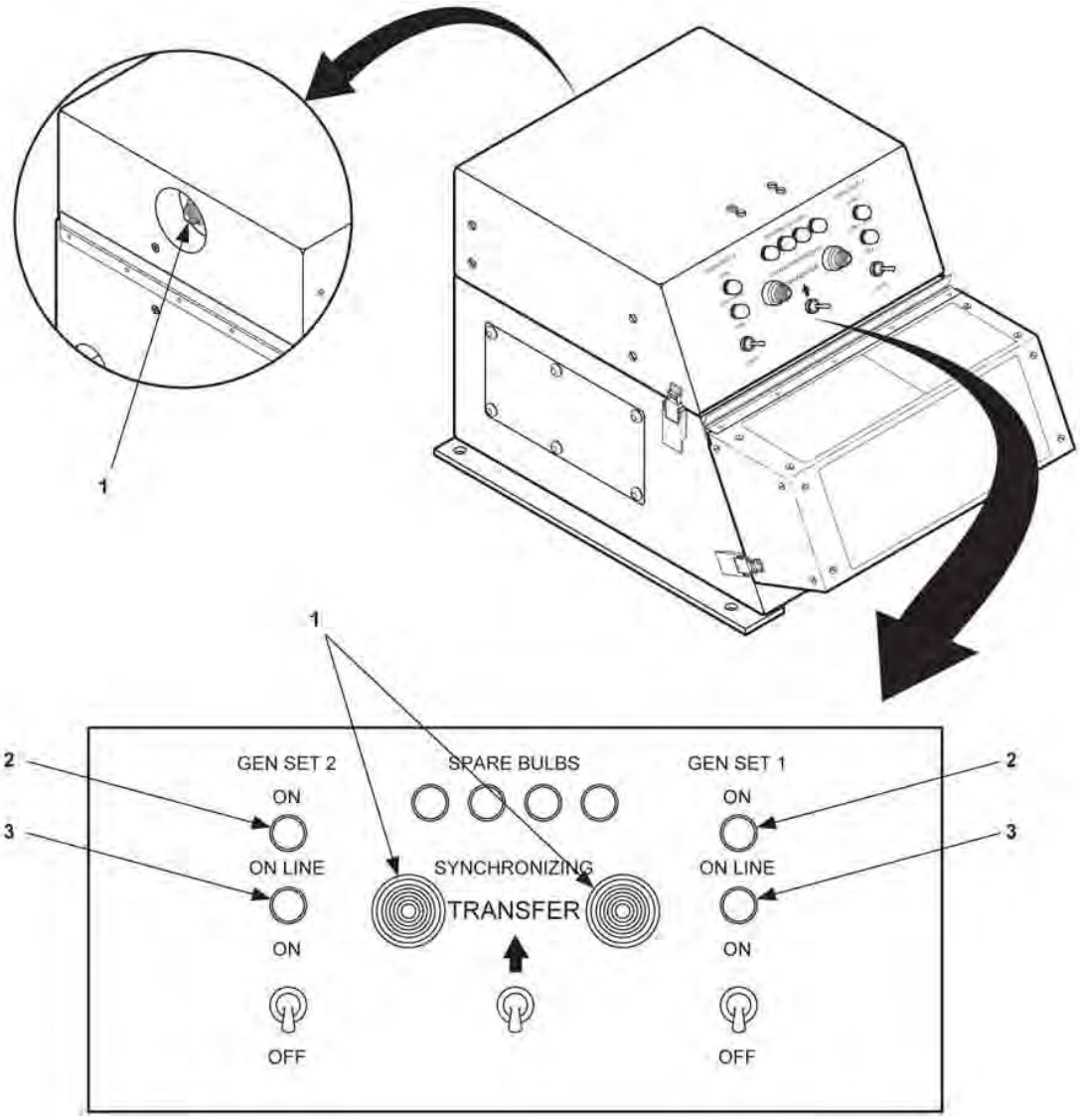

Figure 2. ON, ON-LINE, and SYNCHRONIZING Lights (Old Configuration).

END OF TASK

END OF WORK PACKAGE

CHAPTER 5

FIELD TROUBLESHOOTING PROCEDURES

FOR

10 kW 60 AND 400 Hz TRAILER-MOUNTED POWER UNITS AND POWER PLANTS

CHAPTER 5

FIELD TROUBLESHOOTING PROCEDURES

WORK PACKAGE INDEX

FIELD MAINTENANCE

10 kW 60 AND 400 Hz TRAILER-MOUNTED POWER UNITS AND POWER PLANTS

FIELD TROUBLESHOOTING INDEX

GENERAL

Work package 0013 covers troubleshooting procedures for components unique to the power plant/power unit. Refer to the applicable generator set or trailer technical manual, as listed below, for generator and trailer troubleshooting procedures.

Generator Set Troubleshooting

Refer to TM 9-6115-642-24 and TM 9-2815-253-24.

Trailer Troubleshooting

Refer to TM 9-2330-202-14&P for Power Units PU-798 and PU-799, TM 9-2330-392-14&P for Power Units PU-798A and PU-799A, and TM 9-2330-213-14&P for Power Plants AN/MJQ-37 and AN/MJQ-38.

Power Plant Troubleshooting

The following symptom index contains troubleshooting information for locating and correcting operating troubles that may develop in components unique to the power plant end item. The symptom index lists malfunctions associated with switch box operation. Each malfunction listing includes a reference to the applicable figure that contains a chart. The chart will help you determine probable causes and corrective actions to take. The symptom index cannot list all malfunctions that may occur, nor all tests or inspections and corrective actions. If a malfunction is not listed or cannot be corrected by listed corrective actions, notify next higher level of maintenance.

NOTE

Prior to the use of any of the following procedures, be sure the switch box is properly wired to the generator sets' load terminals. Failure to do so will give misleading results.

WARNING

All metal jewelry can conduct electricity and become entangled in generator set components. Remove all jewelry when working on generator set. Failure to comply with this warning can cause injury or death to personnel.

WARNING

DO NOT wear loose clothing when performing checks, services and maintenance. Failure to comply with this warning can cause injury or death to personnel.

WARNING

High voltage is produced when this generator set is in operation. Make sure unit or units are completely shut down and free of any power source before attempting any repair or maintenance on the unit, switch box or when connecting or disconnecting load cables. Failure to comply with this warning can cause injury or death to personnel.

WARNING

High voltage is produced when the generator set is in operation. Never attempt to start the generator set unless it is properly grounded. Failure to comply with this warning can cause injury or death to personnel.

Malfunction/Symptom	Troubleshooting Procedure

SYMPTOM INDEX

END OF WORK PACKAGE

FIELD MAINTENANCE

10 kW 60 AND 400 Hz TRAILER-MOUNTED POWER UNITS AND POWER PLANTS

FIELD TROUBLESHOOTING PROCEDURES

INITIAL SETUP:

Test Equipment
Multimeter (WP 0101, Table 2, Item 2)

References
Description and Use of Operator Controls and Indicators (WP 0004)
Field PMCS (WP 0016)
Power Cable W19 Maintenance (WP 0017)
Switch Box (Old) (WP 0019)
Switch Box (New) (WP 0020)
Indicator Light Assembly (WP 0021)
Synchronizing Light (WP 0022)
Toggle Switch (WP 0023)
Electrical Leads W3-W8 (WP 0037)
Relay Board Harness W11 (WP 0039)
Permissive Paralleling Relay (WP 0042)
Contactors K1 and K2 (WP 0043)
Diodes CR1-CR4 (WP 0046)
Electrical Leads W3-W8 (WP 0056)
Relay Board Harness Assembly W11 (WP 0057)
Switch Box Harness Assembly W9 (WP 0058)
TM 9-6115-642-10

Tools and Special Tools
Tool Kit, General Mechanic's Automotive or Standard Automotive Tool Set (WP 0101, Table 2, Item 9)

Personnel Required
Operator (1)
91D Assistant (1)

Equipment Condition
Both Sets: Trailer Support Devices Engaged (WP 0005)
Grounding of Power Unit/Power Plant (WP 0005)
Engine Control Master Switch in OFF Position (WP 0005)

NOTE

On previous model switch boxes, load terminal N was designated L0. In this work package, the troubleshooting charts cover both versions of the switch box.

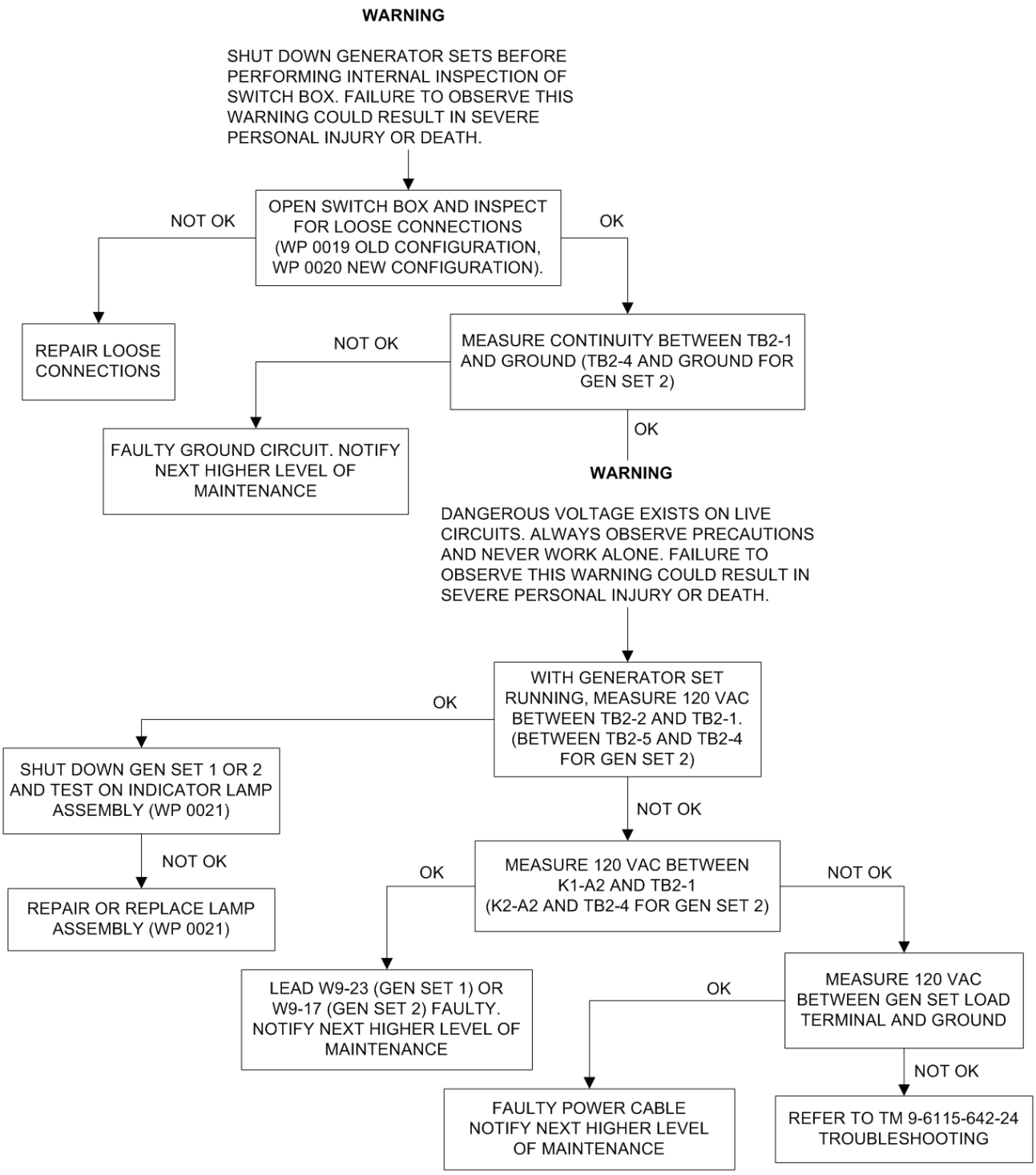

Figure 1. ON Indicator Lamp Serviceable but Fails to Light With Generator Set Running.

END OF TASK

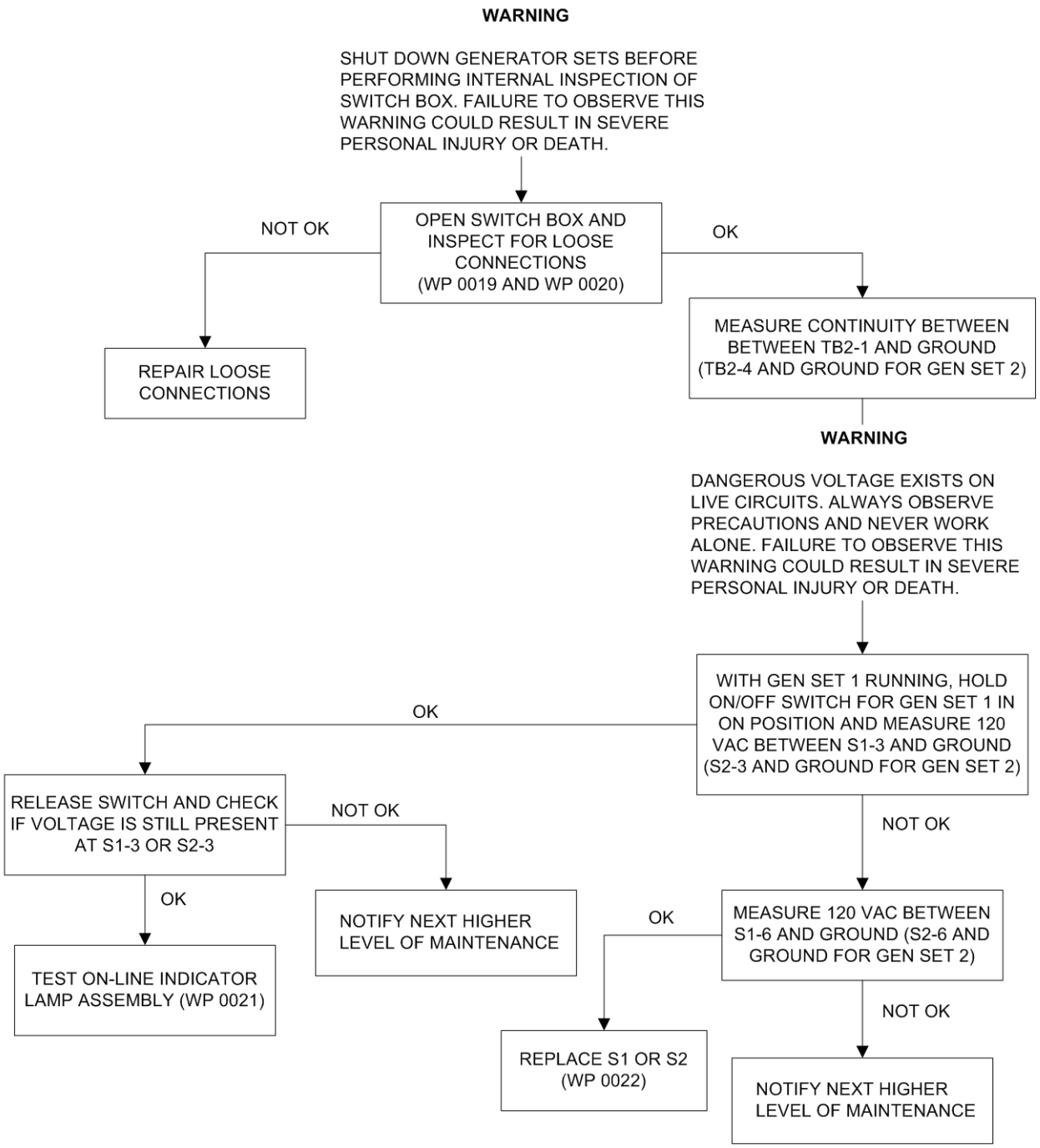

Figure 2. ON-LINE Indicator Lamp Serviceable but Fails to Light When ON/OFF Switch is Placed in ON Position.

END OF TASK

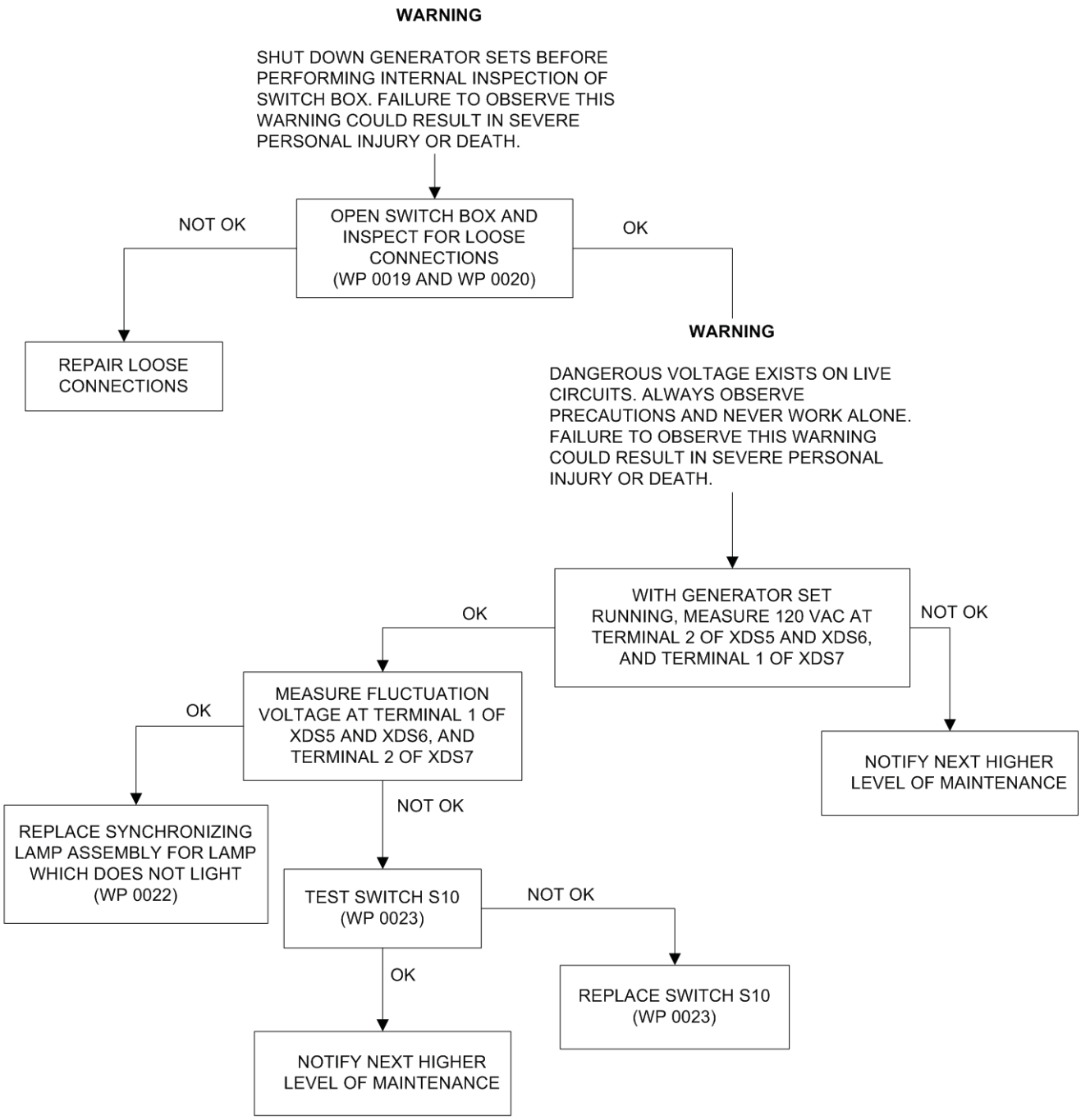

Figure 3. SYNCHRONIZING Indicator Lamps Fail to Light When TRANSFER Switch is Operated.

END OF TASK

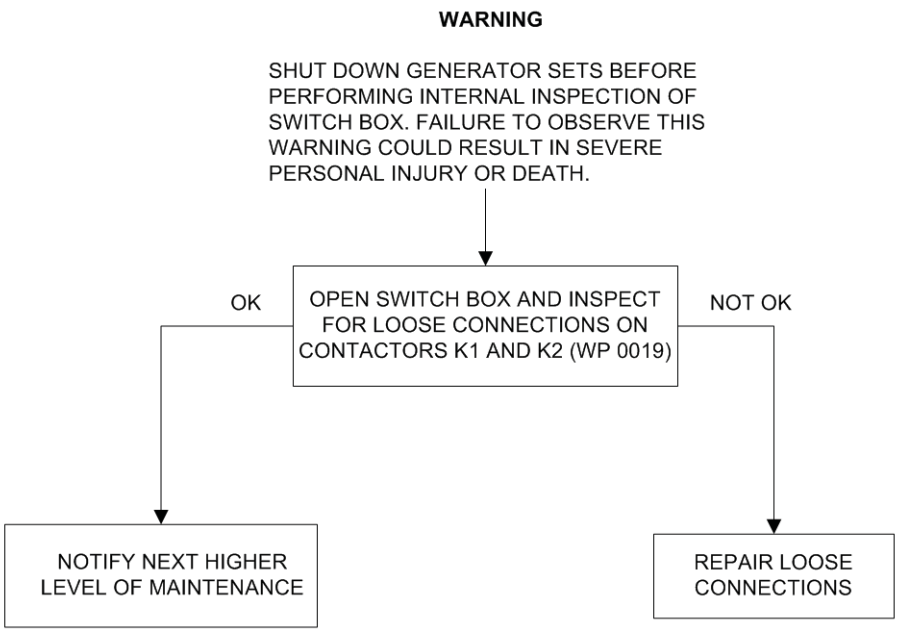

Figure 4. No Power to Load With ON-LINE Indicator Lamp On.

END OF TASK

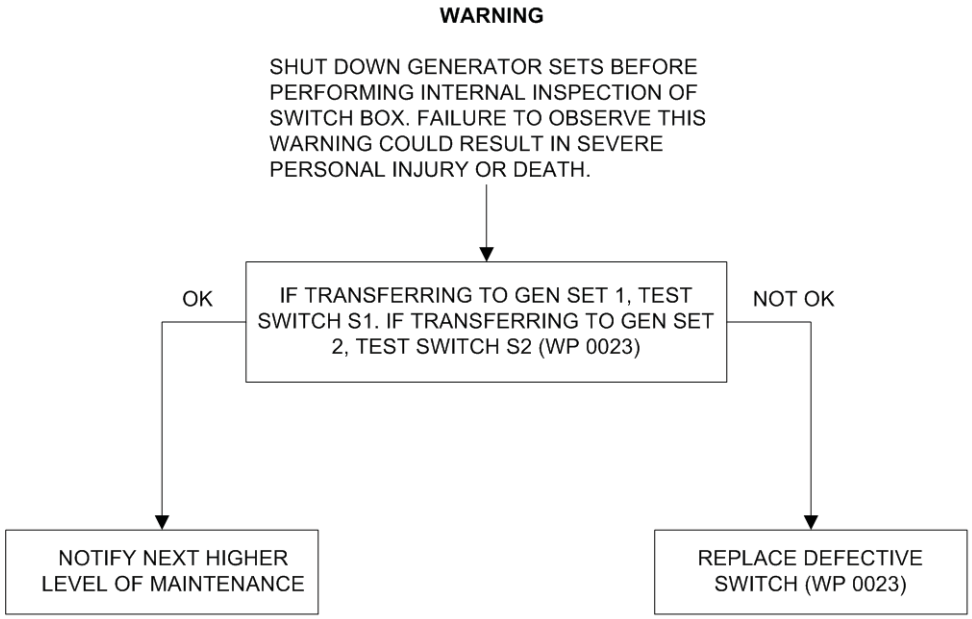

Figure 5. All Indicator Lamps Working Properly but Load Will Not Transfer.

END OF TASK

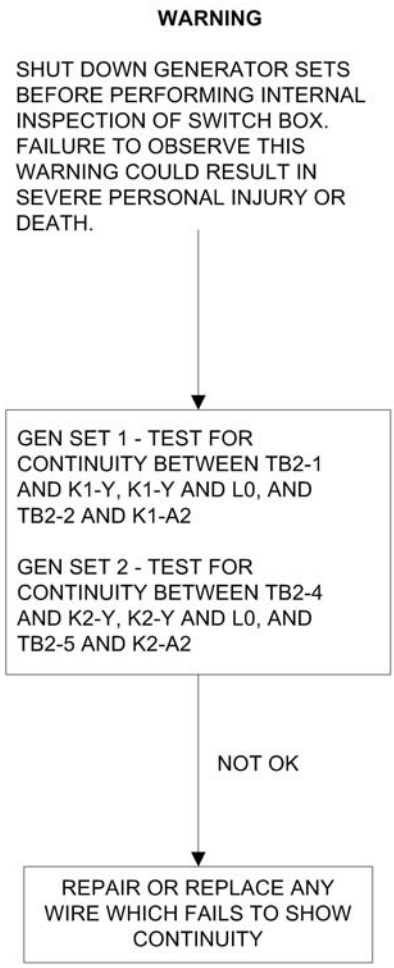

Figure 6. ON Indicator Lamp Assembly Tests Good, but On Indicator Lamp Fails to Light With Generator Set Running.

END OF TASK

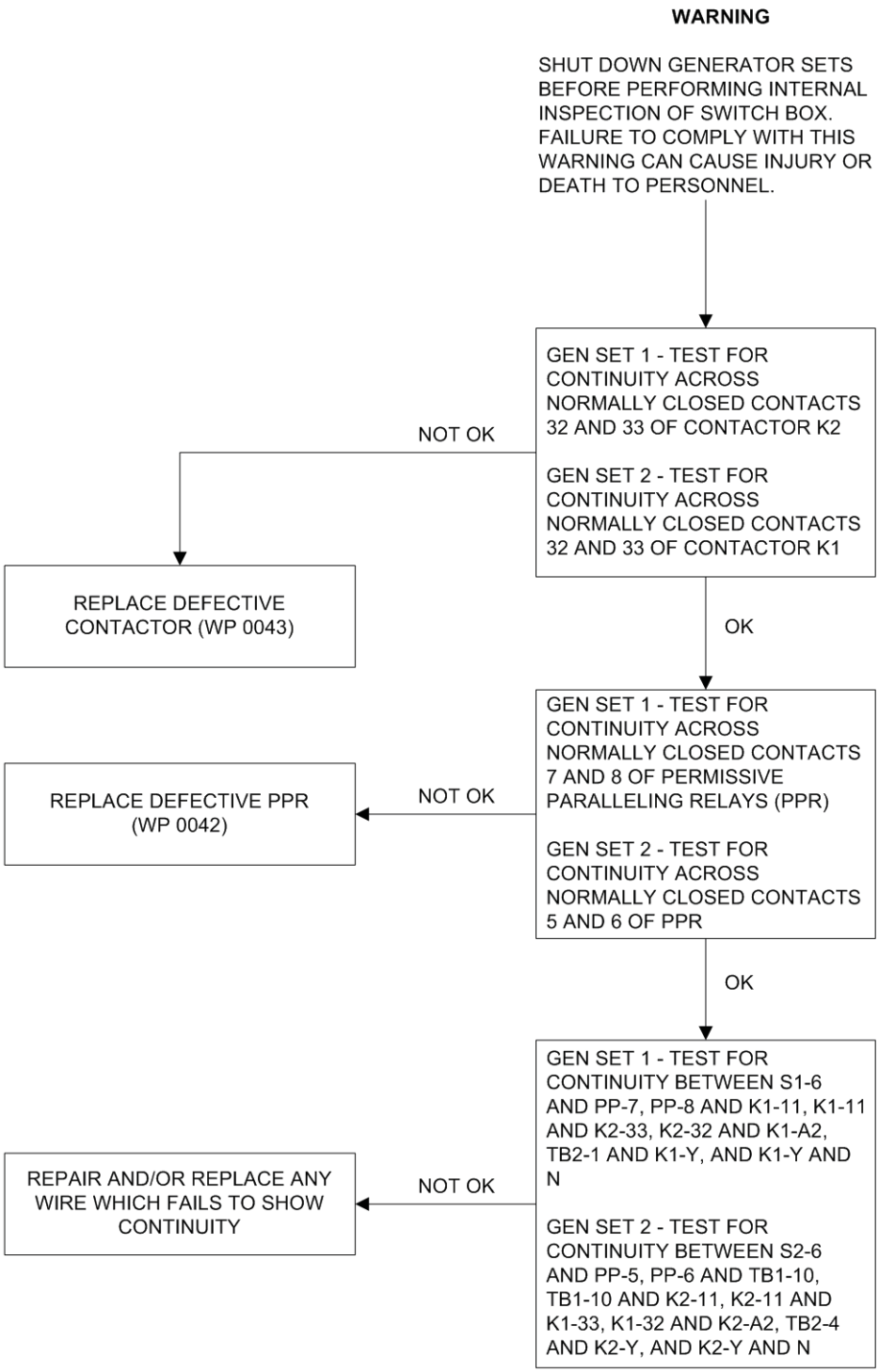

Figure 7. ON-LINE Indicator Lamp Assembly and ON/OFF Switch Serviceable, but ON-LINE Indicator Lamp Fails to Light When ON/OFF Switch is Placed in ON Position.

END OF TASK

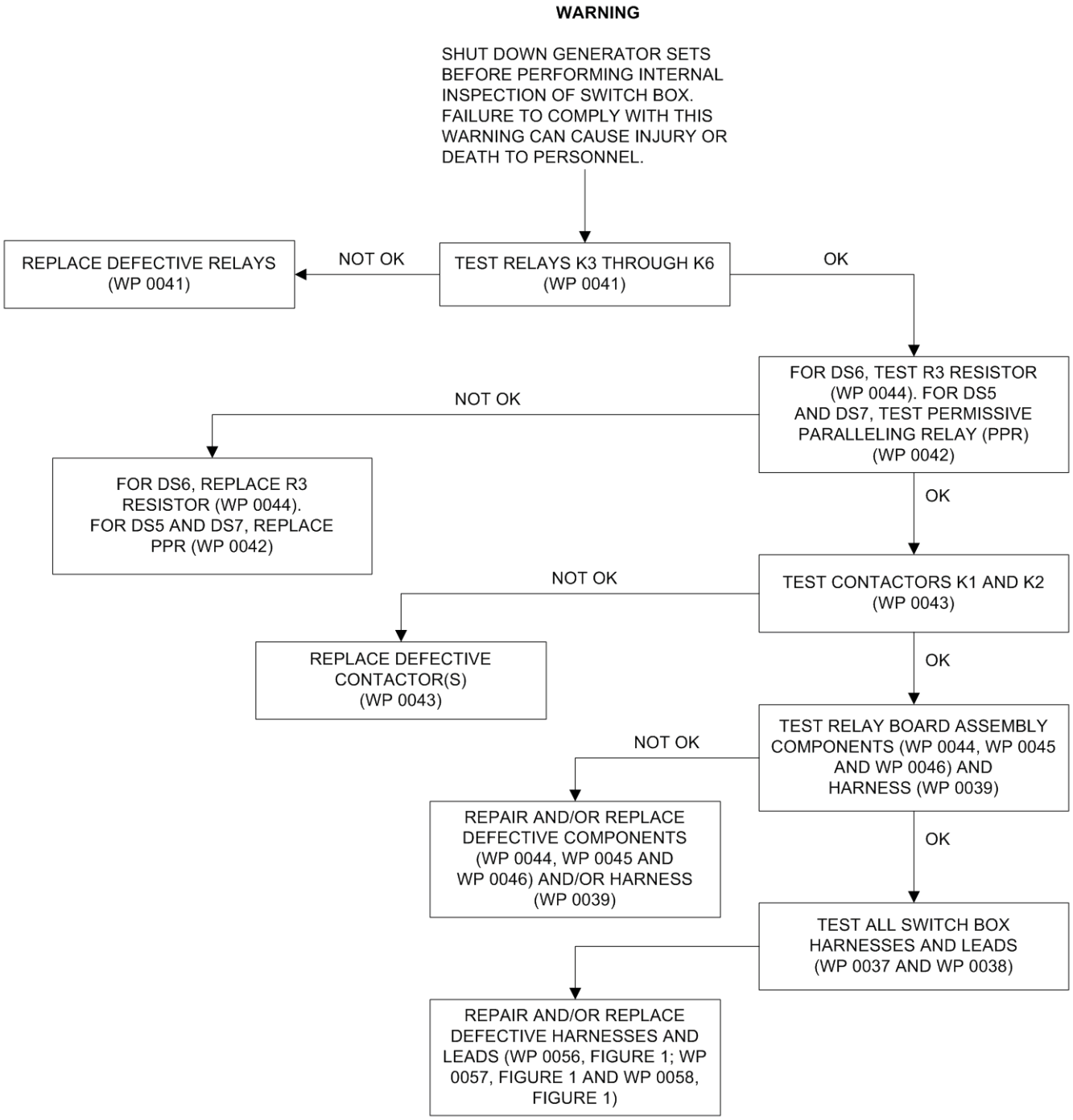

Figure 8. SYNCHRONIZING Indicator Lamps and Transfer Switch Serviceable, but SYNCHRONIZING Indicator Lamps Fail to Light When TRANSFER Switch is Closed and Then Released.

END OF TASK

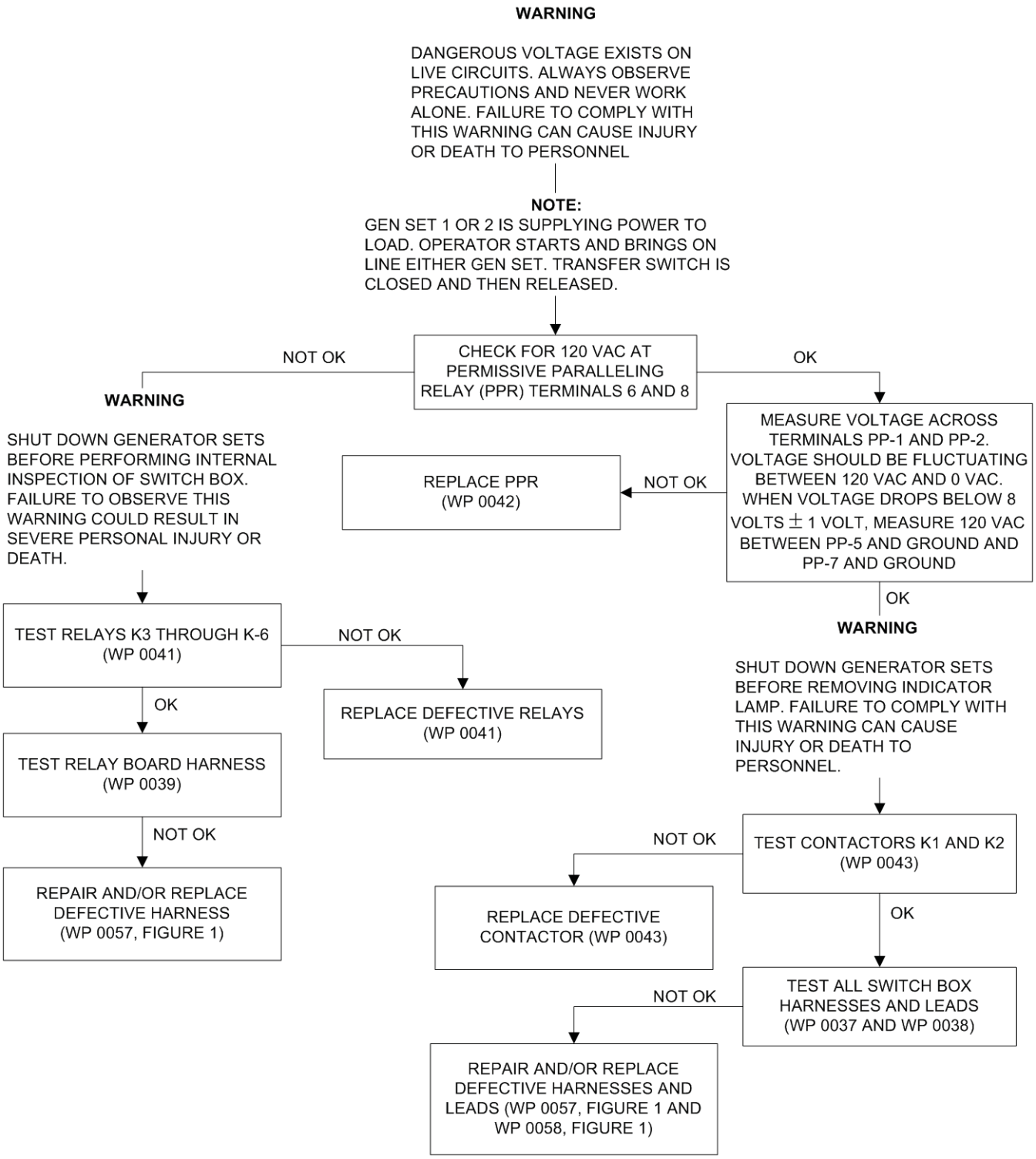

Figure 9. All Indicator Lamps Working Property, but Load Will Not Transfer.

END OF TASK

END OF WORK PACKAGE

CHAPTER 6

FIELD MAINTENANCE INSTRUCTIONS

FOR

10 kW 60 AND 400 Hz TRAILER-MOUNTED POWER UNITS AND POWER PLANTS

CHAPTER 6

FIELD MAINTENANCE INSTRUCTIONS

WORK PACKAGE INDEX

FIELD MAINTENANCE

10 kW 60 AND 400 Hz TRAILER-MOUNTED POWER UNITS AND POWER PLANTS

SERVICE UPON RECEIPT

INITIAL SETUP:

Tools and Special Tools
Tool Kit, General Mechanic's Automotive or Standard Automotive Tool Set (WP 0101, Table 2, Item 9)

References
Description and Use of Operator Controls and Indicators (WP 0004)
Operation Under Usual Conditions (WP 0005)
Power Cable Maintenance (WP 0018)
TM 9-6115-642-10
TM 9-6115-642-24
TM 9-2330-202-14&P (1 Ton Trailer)
TM 9-2330-213-14&P (1½ Ton Trailer)
TM 9-2330-392-14&P (Light Tactical Trailer)

Personnel Required
Operator (1)
91D Assistant (1)

SERVICE UPON RECEIPT OF MATERIEL

UNPACKING

The generator sets will have been boxed prior to shipment. Unpack the power plant as follows:

1. Remove and set aside packing list from side of box. Also remove and set aside shortage packing list if there is one.

WARNING

Steel strapping used in packaging of the power plant/power unit has sharp edges. Wear gloves and use care when cutting and handling steel strapping. Failure to comply with this warning can cause personal injury.

2. Using metal cutters, carefully cut metal strapping from boxes covering generator sets. Remove metal strapping.
3. Switch box cover and switch box load terminal cover may have been secured with tape. If so, remove tape.
4. Unpack and secure fire extinguishers in brackets on trailer.
5. If accessory box is secured with strapping, carefully cut and remove strapping. Open accessory box and remove any packaging/cushioning material from accessories.
6. Using the packing list(s) removed in Step 1, inventory the accessories. Check missing items against shortage packing list (if any). Report any discrepancies to your supervisor.

END OF TASK

CHECKING UNPACKED EQUIPMENT

1. Inspect the equipment for damage incurred during shipment. If the equipment has been damaged, report the damage on SF 364, Report of Discrepancy (ROD).
2. Check the equipment against the packing list(s) to see if the equipment is complete. Report all discrepancies in accordance with the instructions in DA Pam 750-8.

3. Check to see whether the equipment has been modified.

END OF TASK

PROCESSING UNPACKED EQUIPMENT

Deprocessing Unpacked Equipment

Refer to DA Form 2258, Depreservation Guide for Vehicles and Equipment, packed with the power plant/power unit. The depreservation guide explains what was done to the equipment prior to packaging. It also explains what has to be done before placing the equipment in operation. Perform all depreservation actions required by the depreservation guide.

INSTALLATION

Tools, Test Equipment, and Materials Required For Installation

A general mechanic's tool kit is required for installation of the power plant/power unit.

NOTE

The following warnings apply to assembly of all model Power Units/Power Plants covered in this TM.

WARNING

All metal jewelry can conduct electricity and become entangled in generator set components. Remove all jewelry when working on generator set. Failure to comply with this warning can cause injury or death to personnel.

WARNING

DO NOT wear loose clothing when performing checks, services and maintenance. Failure to comply with this warning can cause injury or death to personnel.

WARNING

High voltage is produced when the generator set is in operation. Never attempt to start the generator set unless it is properly grounded. Failure to comply with this warning can cause injury or death to personnel.

WARNING

Shut down generator sets before performing inspection of load cables. Failure to comply with this warning can cause injury or death to personnel.

Assembly of Equipment

Assembly of Power Plants AN/MJQ-37 and AN/MJQ-38. Refer to Figure 1 and assemble the AN/MJQ-37 and AN/MJQ-38 Power Plants as follows:

NOTE

Refer to Figure 1 for installation of power cables on AN/MJQ-37 and AN/MJQ-38.

1. For front generator set, remove stuffing tube locknut (1) from stuffing tube body (7). Slide locknut (1) off power cable leads and ground cable (3).
2. Loosen compression nut (4). Pull in required length of cable to allow installation of leads on terminal board.
3. Insert power cable leads (ends without terminal lugs) (3) through generator output plate (2). Slide stuffing tube locknut (1) over power cable leads.

4. Position stuffing tube body (7) against generator output plate (2). Install and tighten stuffing tube locknut (1).
5. Connect power cable leads and ground cable as follows:
   a. Connect lead marked L1 to generator set load terminal L1.
   b. Connect lead marked L2 to generator set load terminal L2.
   c. Connect lead marked L3 to generator set load terminal L3.
   d. Connect lead marked N to generator set load terminal N.
   e. Connect lead marked GND to generator set GND terminal.
6. Position cable inside two clamps (10) and secure clamps (10) to trailer using two screws (8), flat washers (9), and nuts (11).
7. Repeat Steps 1 through 6 for rear generator set to bond generator set and trailer.
8. To bond generator set and trailer remove wing nut (12), two flat washers (13), hex nut (14), and flat washer (15).
9. Position ground cable (16) over ground stud (17).

WARNING

Ensure nuts on ground terminals are properly secured creating a good ground. Failure to comply with this warning can cause injury or death to personnel.

10. Install flat washer (15), hex nut (14), two flat washers (13), and wing nut (12). Tighten wing nut (12).
11. Unlatch and open switch box load terminal cover (18).
12. Connect ground wire (16) to switch box ground terminal (19).
13. Close and latch switch box load terminal cover (18).
14. Position cable and ground wire inside two clamps (10) and secure clamps to trailer using two screws (8), flat washers (9), and nuts (11).

END OF TASK

Assembly of Power Units PU-798, PU-799, PU-798A and PU-799A. If the ground wire was disconnected for Level A preservation of the generator set, install ground wire as follows:

NOTE

Ground stud on light tactical trailer is different than one used on other trailers.

1. If the light tactical trailers (PU-798A and PU-799A) is being used, go to Step 6 For other trailers, perform Steps 2 through 5 and then go to Step 8.
2. Remove wing nut (Figure 2, Item 1), two flat washers (2), hex nut (3), and flat washer (4) from ground stud (6).
3. Retrieve generator ground wire (5) from accessory box (8).
4. Place ground wire terminal (7) on ground stud (6).

WARNING

Ensure nuts on ground terminals are properly secured creating a good ground. Failure to comply with this warning can cause injury or death to personnel.

5. To reconnect install flat washer (4), hex nut (3), two flat washers (2), and wing nut (1).
6. Loosen nut (11) on light tactical trailer ground stud (13).
7. Insert wire (12) through slot of ground terminal (13) and tighten nut (11).
8. Open generator load terminal access door (9).
9. Route loose end of ground wire (5 or 12) through cable access opening and pull loose end until it reaches ground terminal (10).
10. Connect ground wire loose end to ground terminal (10).

11. Close generator load terminal access door (9).

END OF TASK

PRELIMINARY SERVICING AND ADJUSTMENT OF EQUIPMENT

Generator Set

Refer to TM 9-6115-642-10, TM 9-6115-642-24, and TM 9-2815-253-24.

Trailer

Refer to TM 9-2330-202-14&P for Power Units PU-798 and PU-799, TM 9-2330-392-14&P for Power Units PU-798A and PU-799A, and TM 9-2330-213-14&P for Power Plants AN/MJQ-37 and AN/MJQ-38.

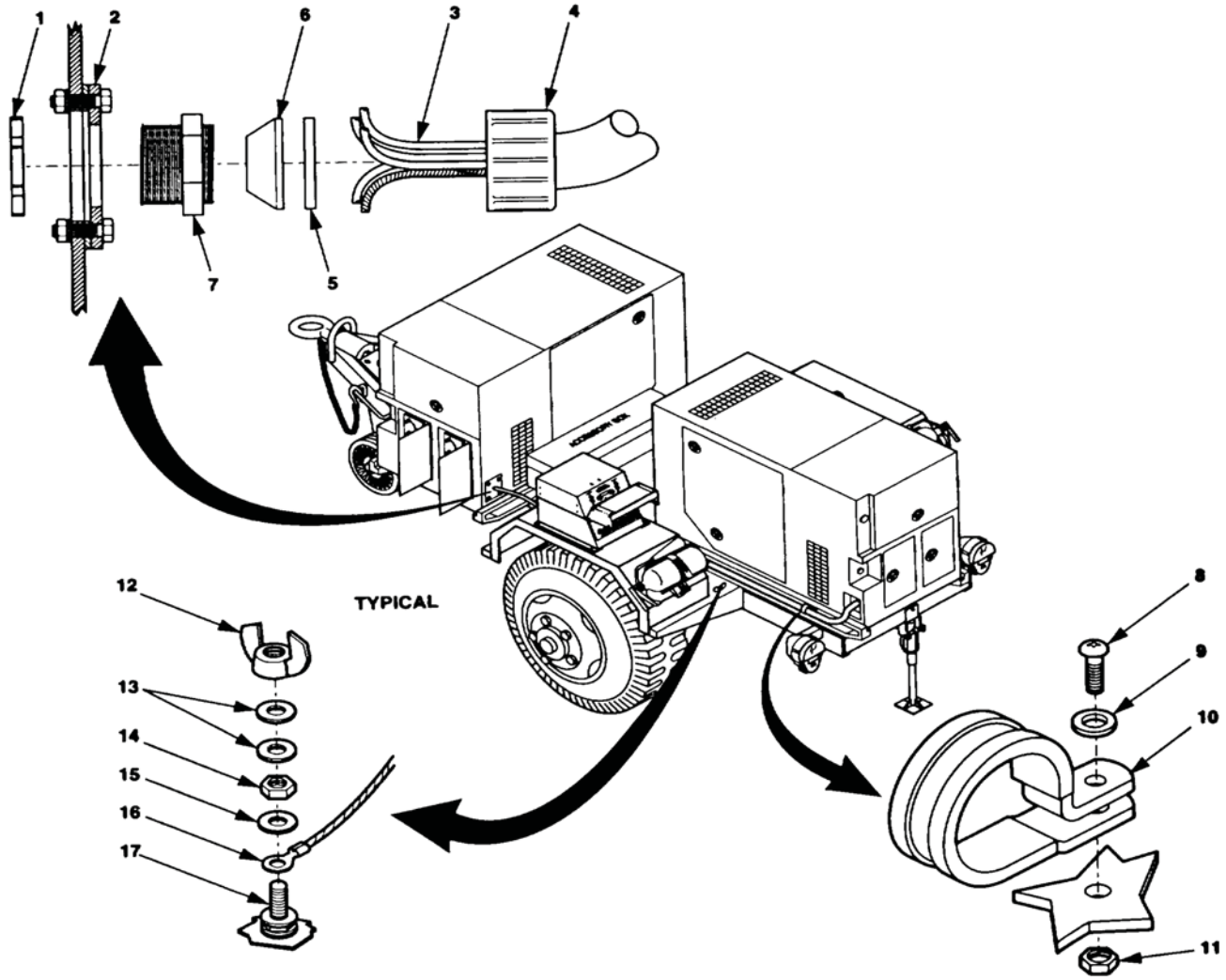

Figure 1. Installation of Power Cables.

NOTE

Ground stud on PU-798A and PU-799A differs from that used on PU-798 and PU-799.

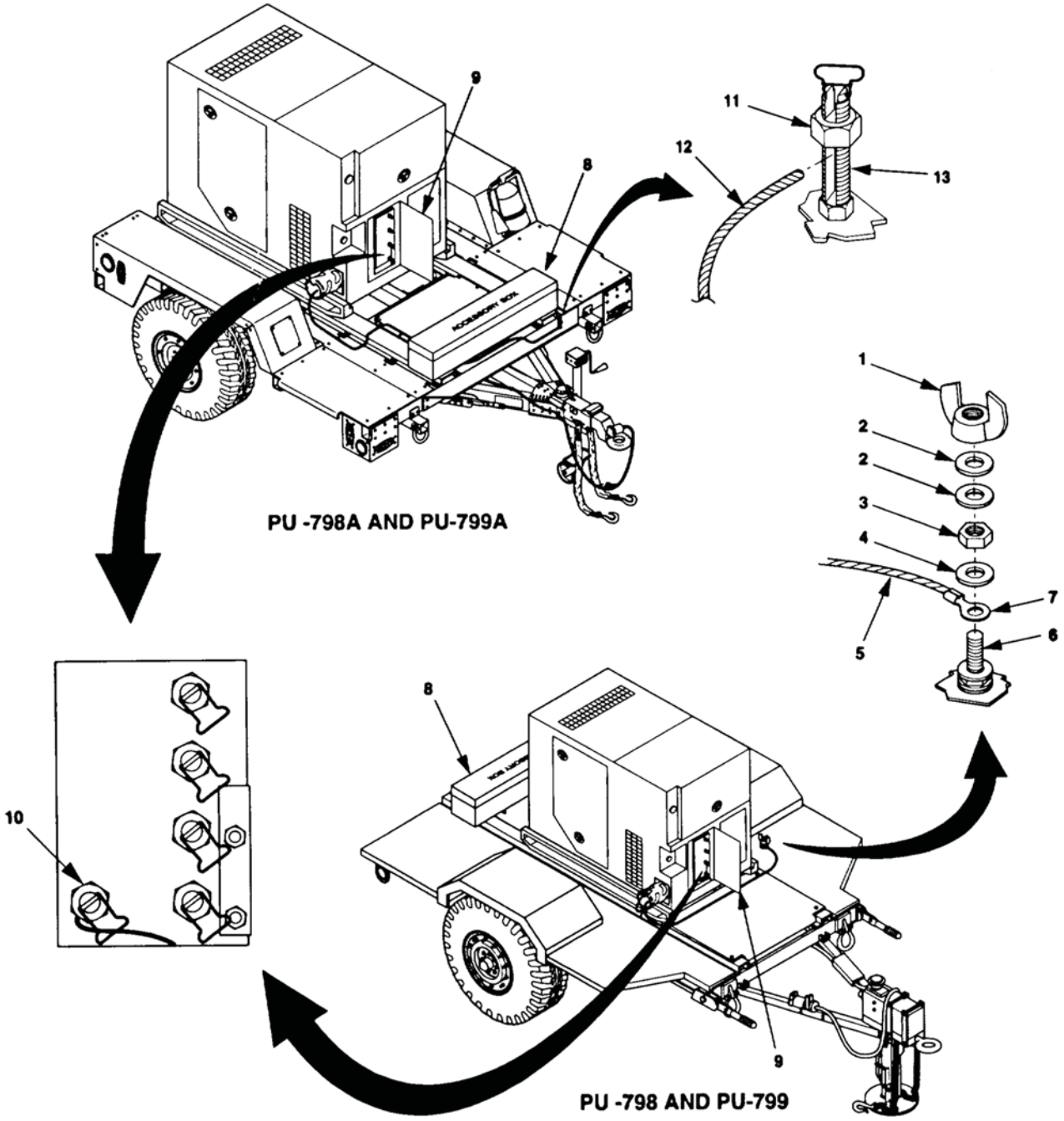

Figure 2. Installation of Ground Wire.

END OF WORK PACKAGE

FIELD MAINTENANCE

10 kW 60 AND 400 Hz TRAILER-MOUNTED POWER UNITS AND POWER PLANTS

FIELD PMCS INTRODUCTION

INITIAL SETUP:

Not Applicable

INTRODUCTION TO FIELD PMCS TABLE

WP 0016, Table 1 (PMCS table) has been provided so you can keep your equipment in good operating condition and ready for its primary mission.

Warnings and Cautions

Always observe the ***WARNINGS, CAUTIONS,*** and ***NOTES*** appearing in your PMCS table. Warnings and cautions appear before applicable procedures. You must observe these ***WARNINGS*** to prevent serious injury to yourself and others. You must observe ***CAUTIONS*** to prevent your equipment from being damaged. You must observe ***NOTES*** to ensure procedures are performed properly.

Explanation of Table Entries

Item No. Column. Numbers in this column are for reference. When completing DA Form 2404 (Equipment Inspection and Maintenance Worksheet), include the item number for the check/service indicating a fault. Item numbers also appear in the order that you must do checks and services for the intervals listed.

Interval Column. This column tells you when you must do the procedure in the procedure column. Perform procedures such as "Monthly" or "Quarterly" at the listed calendar interval. Perform procedures designated by number of hours when the equipment has been operated for that many hours.

Item to be Checked or Serviced Column. This column lists the item to be checked or serviced.

Procedure Column. This column gives the procedures for checking or servicing the item listed in the item to be checked or serviced column. You must perform the procedure to know if the power plant/power unit is ready or available for its intended mission or operation. You must do the procedure at the time stated in the interval column.

Equipment Not Ready/Available if: Column. Information in this column tells you what faults will keep the power plant/power unit from being capable of performing its primary mission. If checks or services show faults listed in this column, do not return the power plant/power unit to service until the faults have been corrected.

Other Table Entries

Be sure to observe all special information and notes that appear in your table.

Special Instructions

1. Trailer, generator, and engine PMCS must be performed along with the Power Unit/Power Plant PMCS. Refer to TM 9-2330-213-14&P for AN/MJQ-37 and AN/MJQ-38 trailer PMCS, TM 9-2330-202-14&P for PU-798 and PU-799 trailer PMCS, and TM 9-2330-392-14&P for PU-798A and PU-799A trailer PMCS. Refer to TM 9-6115-642-24 for generator PMCS and TM 9-2815-253-24 for engine PMCS.

2. Preventive maintenance is not limited to performing the checks and services listed in the PMCS table. Covering unused receptacles, stowing unused accessories, and other routine procedures such as equipment inventory, cleaning components, and touch-up painting are not listed in the table. These are things you should do any time you see that they need to be done. If a routine check is listed in the PMCS table, it is because experience has shown that problems may occur with that item. Take along tools and cleaning cloths needed to perform the required checks and services. Figure 1 is a routing diagram that shows the locations of the items to be checked/serviced. The callout numbers on Figure 1 correspond to the numbers listed in the Item No. column of WP 0016, Table 1.

Corrosion Prevention and Control (CPC)

Corrosion Prevention and Control (CPC) of Army materiel is a continuing concern. It is important that any corrosion problems with this item be reported so that the problem can be corrected and improvements can be made to prevent the problem in future items. Corrosion specifically occurs with metals. It is an electrochemical process that causes the degradation of metals. It is commonly caused by exposure to moisture, acids, bases, or salts. An example is the rusting of iron. Corrosion damage in metals can be seen, depending on the metal, as tarnishing, pitting, fogging, surface residue, and/or cracking. Plastics, composites, and rubbers can also degrade. Degradation is caused by thermal (heat), oxidation (oxygen), solvation (solvents), or photolytic (light, typically UV) processes. The most common exposures are excessive heat or light. Damage from these processes will appear as cracking, softening, swelling, and/or breaking. SF Form 368, Product Quality Deficiency Report should be submitted to the address specified in DA PAM 750-8, The Army Maintenance Management System (TAMMS) Users Manual.

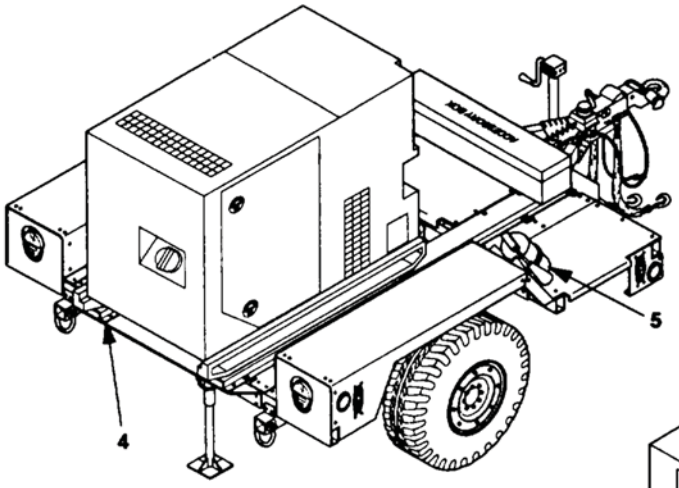

PU-798A AND PU-799A

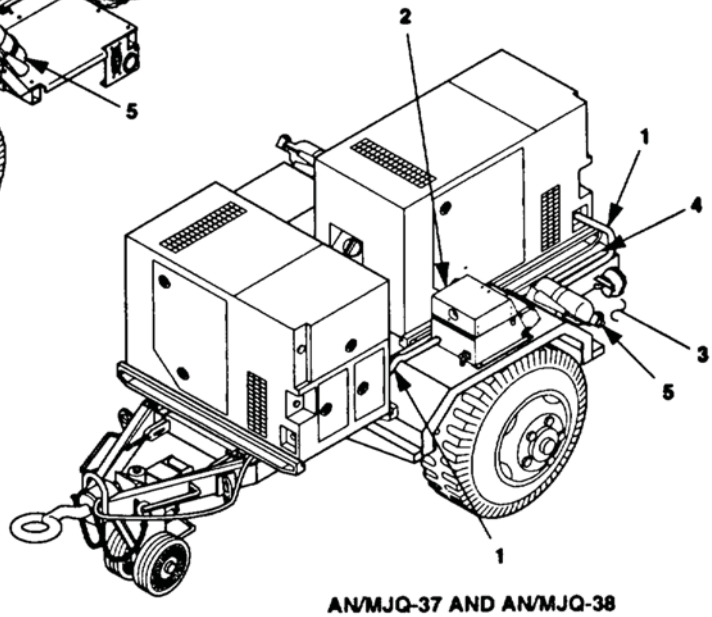

AN/MJQ-37 AND AN/MJQ-38

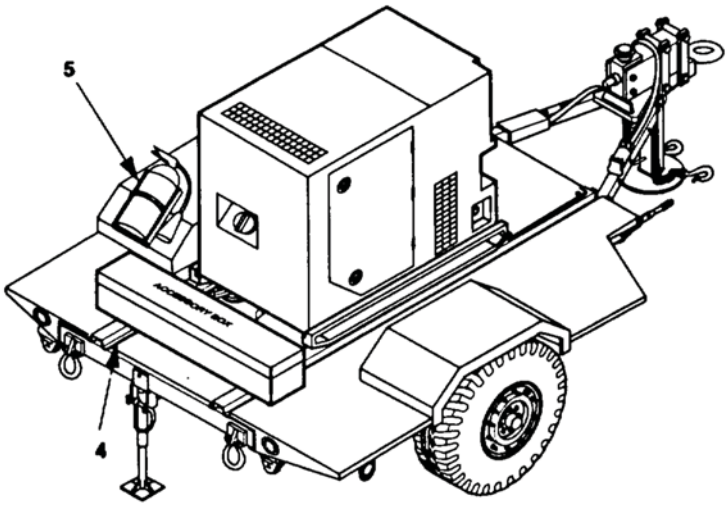

PU-798 AND PU-799

Figure 1. Field PMCS Routing Diagram.

END OF WORK PACKAGE

FIELD MAINTENANCE

10 kW 60 AND 400 Hz TRAILER-MOUNTED POWER UNITS AND POWER PLANTS

FIELD PMCS, INCLUDING LUBRICATION INSTRUCTIONS

INITIAL SETUP:

Tools and Special Tools
Tool Kit, General Mechanic's Automotive or Standard Automotive Tool Set (WP 0101, Table 2, Item 9)

References
Description and Use of Operator Controls and Indicators (WP 0004)
Operation Under Usual Conditions (WP 0005)
Power Cable Maintenance (WP 0018)
Expendable and Durable Items List (WP 0104)
LO 9-6115-642-12
TM 9-6115-641-10
TM 9-6115-641-24
TM 9-2330-202-14&P (1 Ton Trailer)
TM 9-2330-213-14&P (1½ Ton Trailer)
TM 9-2330-392-14&P (Light Tactical Trailer)

Personnel Required
Operator (1)
91D Assistant (1)

WARNING

Before performing any maintenance that requires climbing on or under trailer, make sure that trailer handbrakes are set, trailer front landing leg/support leg is lowered, and leveling-support jack is lowered. Failure to comply with this warning can cause personal injury or death to personnel from trailer suddenly rolling or tipping.

Table 1. Field Preventive Maintenance Checks and Services.

ITEM NO.	INTERVAL	ITEM TO BE CHECKED OR SERVICED	PROCEDURE	EQUIPMENT NOT READY/AVAILABLE IF:
1	Semi - annually	POWER CABLE (AN/MJQ-37 AND AN/MJQ-38 ONLY)	Inspect power cables for worn, frayed, or cracked insulation, loose terminal lugs, and loose connections. Tighten as needed.	Power cable is unserviceable.
2	Semi - annually	SWITCH BOX ASSEMBLY (AN/MJQ-37 AND AN/MJQ-38 ONLY)	Inspect switch box assembly (refer to WP 0019).	
3	Semi - annually	TRAILER LIFTING RINGS (AN/MJQ-37 AND AN/MJQ-38 ONLY)	Inspect for wear, damage, and loose attaching hardware. Torque to 315-347 ft•lb (427-470 N•m). If loose or damaged refer to WP 0027.	
4	Semi - annually	MOUNTING RAILS	Inspect for cracks and deformation.	Mounting rail is cracked or deformed.
5	Semi - annually	FIRE EXTINGUISHER	a. Inspect for broken seal and damage to handle.	

Table 1. Field Preventive Maintenance Checks and Services. - Continued

ITEM NO.	INTERVAL	ITEM TO BE CHECKED OR SERVICED	PROCEDURE	EQUIPMENT NOT READY/AVAILABLE IF:
			b. Weigh to determine whether charge is sufficient. Weight is 13 pounds when fully charged. If weight is 12.5 pounds or less, send to specialized activity for recharging.	Fire extinguisher not charged.

MANDATORY REPLACEMENT PARTS LIST

There are no replacement parts required for these PMCS procedures.

FIELD LUBRICATION INSTRUCTIONS

Power Plant/Power Unit Lubrication

Detailed instructions for lubrication of major components of the power plants/power units are contained in the applicable generator set Lubrication Orders (LOs) and trailer TMs. The following paragraphs identify the applicable references and contain lubrication instructions that are not included in the references.

Generator Set Lubrication

Refer to LO 9-6115-642-12 for generator set and engine lubrication instructions. See WP 0104 for expendable supplies and materials needed for lubrication.

Trailer Assembly Lubrication

Refer to TM 9-2330-202-14&P for Power Units PU-798 and PU-799 trailer chassis lubrication instructions, TM 9-2330-392-14&P for Power Units PU-798A and PU-799A trailer chassis lubrication instructions, and TM 9-2330-213-14&P for Power Plants AN/MJQ-37 and AN/MJQ-38 trailer chassis lubrication instructions. See WP 0104 for expendable supplies and materials needed for lubrication.

Rear Leveling-Support Jack Lubrication

The rear leveling-support jack is a modification to the standard 1½ ton trailer chassis, the standard 1 ton trailer chassis, and the light tactical trailer chassis. Lubrication of this rear leveling-support jack is not covered in the trailer TMs. See Figure 1 and lubricate the rear leveling-support jack semiannually, as follows:

WARNING

Solvent used to clean parts is potentially dangerous to personnel and property. Clean parts in a well-ventilated area. Avoid inhalation of solvent fumes. Wear goggles and rubber gloves to protect eyes and skin. Wash exposed skin thoroughly. Do not smoke or use near open flame or excessive heat. Failure to comply with this warning can cause severe personal injury and/or damage to equipment.

1. Clean the lubrication fitting (1) with dry cleaning solvent. Expendable supplies and materials needed for lubrication are listed in WP 0104.

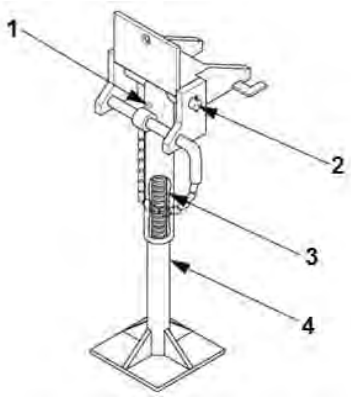

Figure 1. Rear Leveling-Support Jack Lubrication Points.

2. Inject sufficient GAA grease into lubrication fitting (1) to lubricate screw threads (3) inside leg base (4).
3. Apply OE lubricating oil to both ends of rear leveling-support jack pivot shaft (2).

END OF TASK

END OF WORK PACKAGE

FIELD MAINTENANCE

10 kW 60 AND 400 Hz TRAILER-MOUNTED POWER UNITS AND POWER PLANTS

FIELD MAINTENANCE PROCEDURES

INITIAL SETUP:

References
TM 9-6115-642-24
TM 9-2815-253-24
TM 9-2330-202-14&P (1 Ton Trailer)
TM 9-2330-213-14&P (1½ Ton Trailer)
TM 9-2330-392-14&P (Light Tactical Trailer)

GENERAL

The following work packages cover field level maintenance procedures for power plant/power unit components that are not covered in the generator set technical manual, engine technical manual, or trailer technical manuals.

MAINTENANCE OF GENERATOR SETS

Refer to generator TM 9-6115-642-24, engine TM 9-2815-253-24 or winterization kit TB 9-6115-642-13.

MAINTENANCE OF TRAILERS

Refer to TM 9-2330-202-14&P for Power Units PU-798 and PU-799, TM 9-2330-392-14&P for Power Units PU-798A and PU-799A, and TM 9-2330-213-14&P for Power Plants AN/MJQ-37 and AN/MJQ-38.

END OF WORK PACKAGE

FIELD MAINTENANCE

10 kW 60 AND 400 Hz TRAILER-MOUNTED POWER UNITS AND POWER PLANTS

POWER CABLE: INSPECTION, REMOVAL, INSTALLATION, REPLACEMENT

INITIAL SETUP:

Tools and Special Tools
Tool Kit, General Mechanic's Automotive or Standard Automotive Tool Set (WP 0101, Table 2, Item 9)
Multimeter (WP 0101, Table 2, Item 2)

Equipment Condition
Both generator sets shut down; WP 0005, Stopping Generator Set.
Trailer handbrake set.

References
TM 9-6115-642-10
TM 9-6115-642-24

WARNING

All metal jewelry can conduct electricity and become entangled in generator set components. Remove all jewelry when working on generator set. Failure to comply with this warning can cause injury or death to personnel.

WARNING

DO NOT wear loose clothing when performing checks, services and maintenance. Failure to comply with this warning can cause injury or death to personnel.

WARNING

High voltage is produced when this generator set is in operation. Make sure unit or units are completely shut down and free of any power source before attempting any repair or maintenance on the unit, switch box or when connecting or disconnecting load cables. Failure to comply with this warning can cause injury or death to personnel.

WARNING

High voltage is produced when the generator set is in operation. Never attempt to start the generator set unless it is properly grounded. Failure to comply with this warning can cause injury or death to personnel.

INSPECTION

1. Release two clamping catches (Figure 1, Item 11) and open switch box cover (1).
2. Disconnect power cable to be tested from generator set load terminals (Figure 2, Item 2).

NOTE

Cable leads L1, L2, and L3 terminate in switch box at contactor K1 for Generator 1 (front) and contactor K2 for Generator 2 (rear). N and Ground leads terminate at switch box load terminals.

3. Use multimeter to check continuity of each electrical lead in power cable. Each lead should have continuity between bare end of conductor at generator set load terminal and terminal lug (8). Check for continuity between lead marked ground and switch box ground load terminal, lead marked N and switch box N load terminal, lead marked L1 and contactor terminal A1, lead marked L2 and contactor terminal B1, and lead marked L3 and contactor terminal C1. If no continuity, notify next higher level of maintenance.

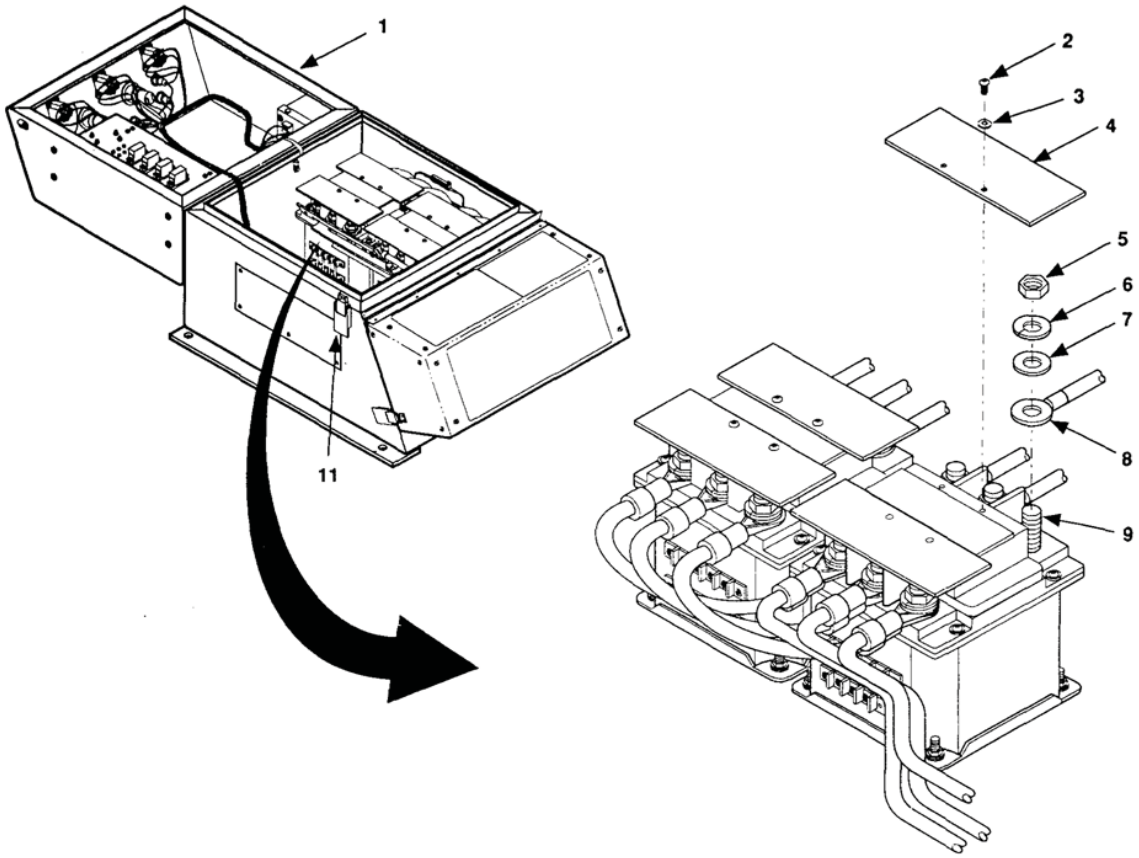

Figure 1. Power Cable Connections to Switch Box Contactors (OLD).

4. Use multimeter to check for shorts in power cable. Check for continuity between ground and N, L1, L2, and L3; N and L1, L2, and L3; L1 and L2, and L3; and L2 and L3. No continuity reading in any of these tests indicates a shorted cable which must be replaced.
5. Close switch box cover (1) and secure with clamping catches (11).

END OF TASK

REMOVAL

1. Disconnect electrical leads and ground lead from generator set.
2. Pull power cable from stuffing tube.
   a. Remove stuffing tube compression nut (Figure 2, Item 8) from stuffing tube body (11).

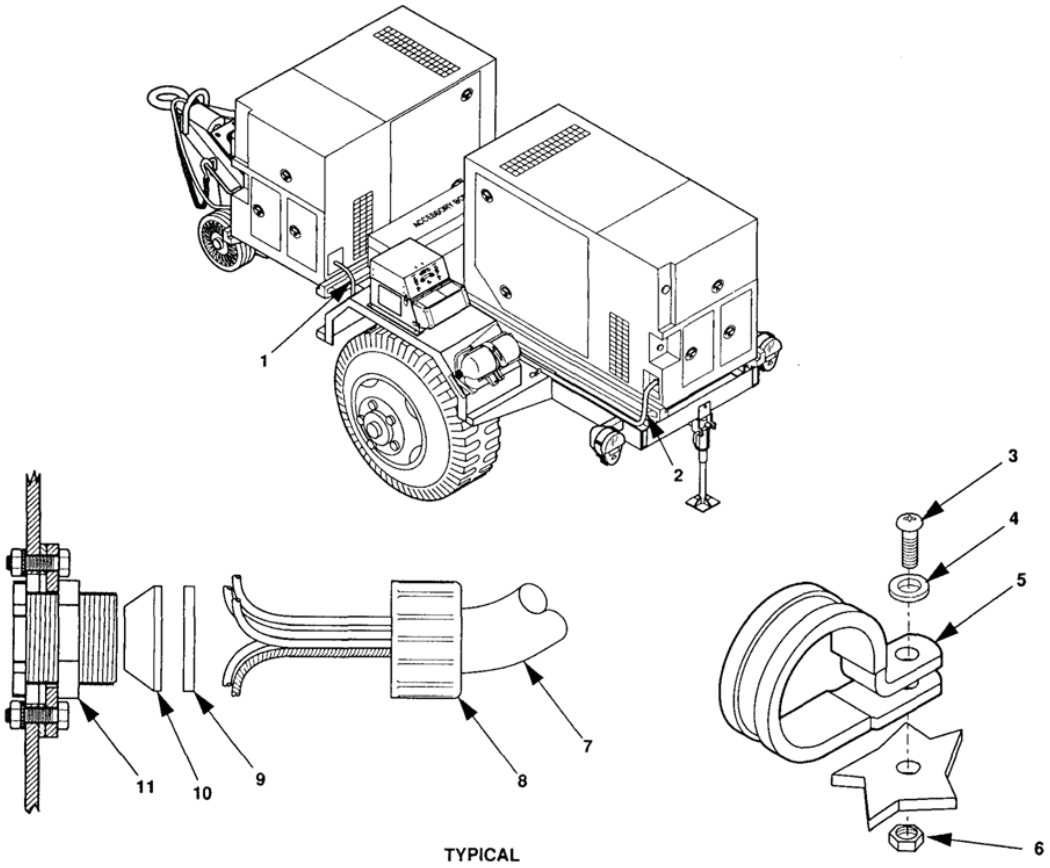

Figure 2. Disconnect Power Cable from Generator Set.

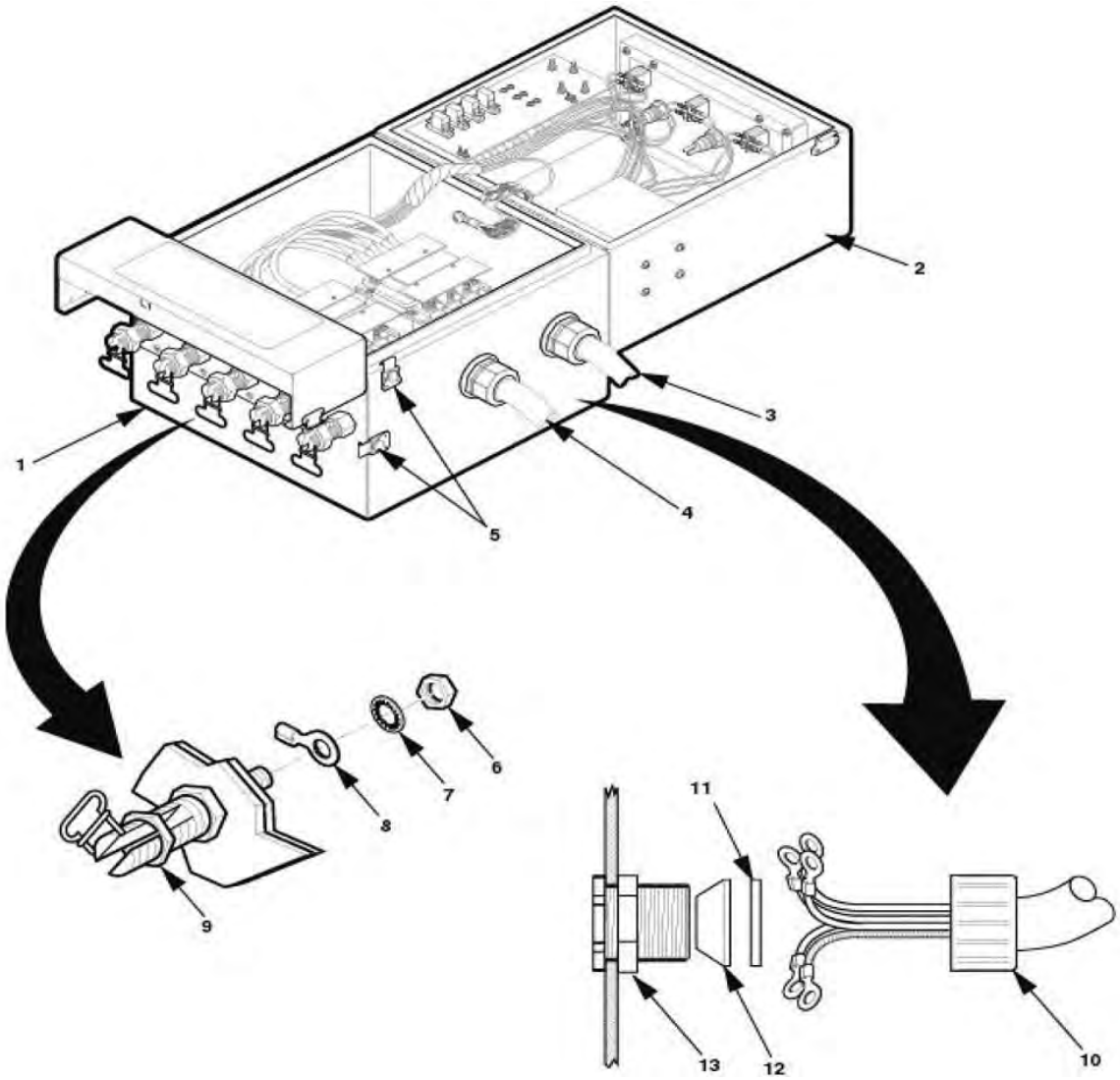

Figure 3. Disconnect Power Cable From Switch Box Terminals (New Configuration).

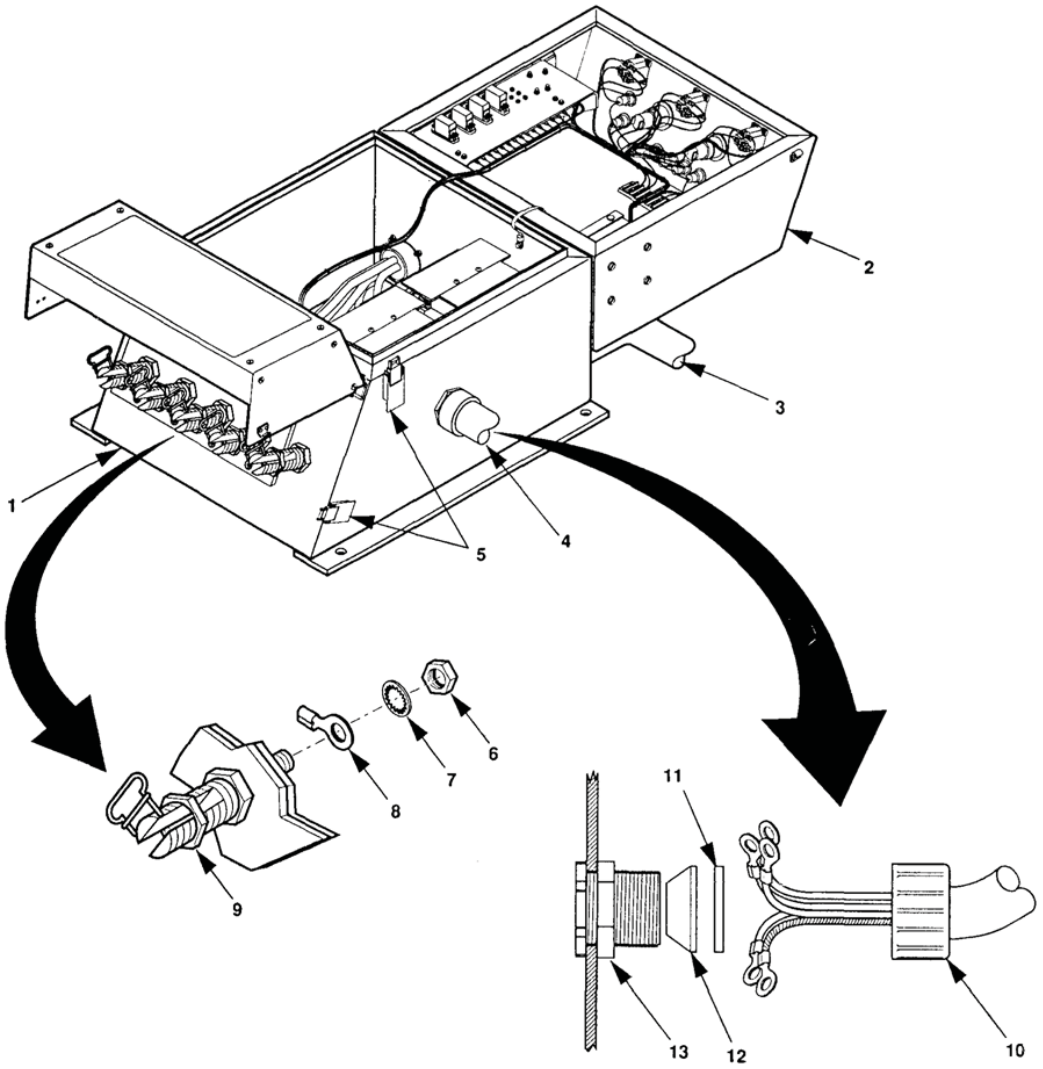

Figure 4. Disconnect Power Cable From Switch Box Terminals (Old Configuration).

b. Pull power cable (1 or 2) through stuffing tube until ends of power cable are free of stuffing tube body (11).

c. Remove washer (9), seal (10), and stuffing tube compression nut (8) from power cable (1 or 2). Place items back on stuffing tube and tighten.

3. Disconnect power cable from switch box.

a. Release clamping catches (Figure 1, Item 11) and open switch box cover (1).

b. Remove two screws (2) and lockwashers (3) from contactor terminal shield (4) of contactor associated with power cable being removed.

c. Remove contactor terminal shield (4).

d. Remove nuts (5), lockwashers (6), and flat washers (7) from contactor terminals (9).

e. Lift terminal leads (8) from contactor terminals (9). Remove only the terminal leads associated with electrical leads of power cable being removed. If necessary to remove other terminal leads to access those for power cable being disconnected, reinstall other terminal leads onto contactor terminals (9).

f. Install flat washers (7), lockwashers (6), and terminal nuts (5) on contactor terminals (9).

g. Remove hex nuts (Figure 4, Item 6) and internal tooth washers (7) from ground and N terminals (9) of switch box.

h. Remove only the wire associated with the power cable being replaced. If necessary to remove other terminal leads to access those for power cable, reinstall other terminal leads on terminal (9).

i. Place internal tooth washers (7) over the end of terminals (9) and loosely install the hex nuts (6).

j. Remove stuffing tube compression nut (10) from stuffing tube body (13).

k. Pull power cable (3 or 4) through stuffing tube (13) until ends of power cable are free of stuffing tube body (13).

l. Remove washer (11), seal (12), and stuffing tube compression nut (10) from power cable (3 or 4). Place items back on stuffing tube and tighten.

4. Remove power cable from clamps.

a. Remove self-locking nuts (Figure 2, Item 6), screws (3), and flat washers (4) securing clamps (5) to trailer. Remove cable (3 or 4).

b. Remove clamps (5) off power cable (3 or 4).

END OF TASK

INSTALLATION

1. Install stuffing tube compression nut (Figure 4, Item 10), washer (11), and seal (12) on end of power cable (3 or 4) having leads with terminal lugs.
2. Insert terminal lug end of power cable (3 or 4) into stuffing tube assembly (13) and slide forward until end of power cable outer covering is visible inside switchbox (1).
3. Slide seal (12), washer (11), and stuffing tube compression nut (10) forward and tighten compression nut.
4. Remove hex nut (6) and internal tooth washer (7) from load terminal N (9) and install lead marked N.
5. Install internal tooth washer (7) and hex nut (6). Tighten hex nut.
6. Repeat Steps 4 and 5 for ground terminal and ground lead.
7. Remove nuts (Figure 1, Item 5), lockwashers (6), and flat washers (7) from contactor terminal (9) of contactor associated with power cable being installed.
8. Connect power cable lead marked L1 to contactor terminal A2, lead marked L2 to contactor terminal B2, and lead marked L3 to contactor terminal C2.
9. Install flat washers (7), lockwashers (6), and nuts (5) on contactor terminals (9). Tighten nuts.
10. Install contactor terminal shield (4), lockwashers (3), and screws (2).
11. Close switch box cover (1) and secure with clamping catches (11).
12. Repeat Steps 1, 2, and 3 above and install other end of power cable in stuffing tube on generator set.
13. Connect leads to generator set load terminals as follows:

Lead Marked	to	Generator Set Load Terminal
Ground		Ground
N		N
L1		L1
L2		L2
L3		L3

14. Place clamps (Figure 2, Item 5) on replacement power cable (3 or 4) and existing ground wire going from switch box ground terminal and trailer ground stud, and install flat washers (4), screws (3), and self-locking nuts (6).

END OF TASK

REPLACEMENT

Replace is the same as removal and installation.

END OF TASK

END OF WORK PACKAGE

FIELD MAINTENANCE

10 kW 60 AND 400 Hz TRAILER-MOUNTED POWER UNITS AND POWER PLANTS

SWITCH BOX (OLD): INSPECTION, REPAIR, REMOVAL, INSTALLATION

INITIAL SETUP:

Tools and Special Tools
Tool Kit, General Mechanic's Automotive or Standard Automotive Tool Set (WP 0101, Table 2, Item 9)
¼ Inch Drill (WP 0101, Table 2, Item 5)
Blind Head Riveter (WP 0101, Table 2, Item 4)

Equipment Condition
Both generator sets shut down; WP 0005, Stopping Generator Set.
Trailer handbrakes set, front support leg/landing leg lowered, and rear leveling-support jack lowered; WP 0005, Positioning Power Plant/Power Unit.
Power cables and ground disconnected from switch box; WP 0018.

Materials/Parts
Blind Rivets
Gasket

WARNING

All metal jewelry can conduct electricity and become entangled in generator set components. Remove all jewelry when working on generator set. Failure to comply with this warning can cause injury or death to personnel.

WARNING

DO NOT wear loose clothing when performing checks, services and maintenance. Failure to comply with this warning can cause injury or death to personnel.

WARNING

High voltage is produced when this generator set is in operation. Make sure unit or units are completely shut down and free of any power source before attempting any repair or maintenance on the unit, switch box or when connecting or disconnecting load cables. Failure to comply with this warning can cause injury or death to personnel.

WARNING

High voltage is produced when the generator set is in operation. Never attempt to start the generator set unless it is properly grounded. Failure to comply with this warning can cause injury or death to personnel.

INSPECTION

1. Release clamping catches (Figure 1, Item 5) and open switch box cover (9).
2. Inspect all leads and wires for worn or deteriorated insulation that reveals bare spots in conductors. If found, notify next higher level of maintenance.
3. Inspect all leads and wires for loose or disconnected terminal lugs. If found, repair and/or notify next higher level of maintenance.
4. Inspect all terminals for looseness. Tighten as needed.
5. Inspect all component mountings for looseness. Tighten as needed.

6. Inspect gasket (10) on switch box. If required, replace gasket (WP 0062, Figure 1).
7. Close switch box cover (9) and secure with clamping catches (5).

END OF TASK

REPAIR

1. CLAMPING CATCH REPLACEMENT.
   a. Drill out rivets (1) and remove defective clamping catch (2).
   b. Position new clamping catch (2) and secure with rivets (1).
2. DATA PLATE REPLACEMENT.
   a. Drill out rivets (7) and remove schematic diagram data plate (8).
   b. Position new schematic diagram data plate (8) and secure with blind rivets (7).
3. GASKET REPLACEMENT.
   a. Remove old gasket (10) from switch box and scrape surface to remove old cement.
   b. Cut new gasket material and cement to switch box. Refer to WP 0062, Figure 1.
4. STUFFING TUBE REPLACEMENT.
   a. Unscrew locknut (11) from stuffing tube body (12) of stuffing tube and remove from switch box.
   b. Insert stuffing tube body (12) through hole in switch box and secure with locknut (11).

NOTE

Switch box mounting hardware for AN/MJQ-37 and AN/MJQ-38 (plain nuts, lockwashers, flat washers, and cap screws) differs from that used on other power plants but removal and installation instructions are similar.

END OF TASK

REMOVAL

1. Remove power cables and ground cable (WP 0018).
2. Remove four self-locking nuts (Figure 1, Item 3), flat washers (4), and cap screws (6), securing switch box (13) to fender. Remove switch box (13).

END OF TASK

INSTALLATION

1. To install, position switch box (13) on trailer fender.
2. Install four cap screws (6), flat washers (4), and self-locking nuts (3).
3. Connect power cables and ground cable (WP 0018).

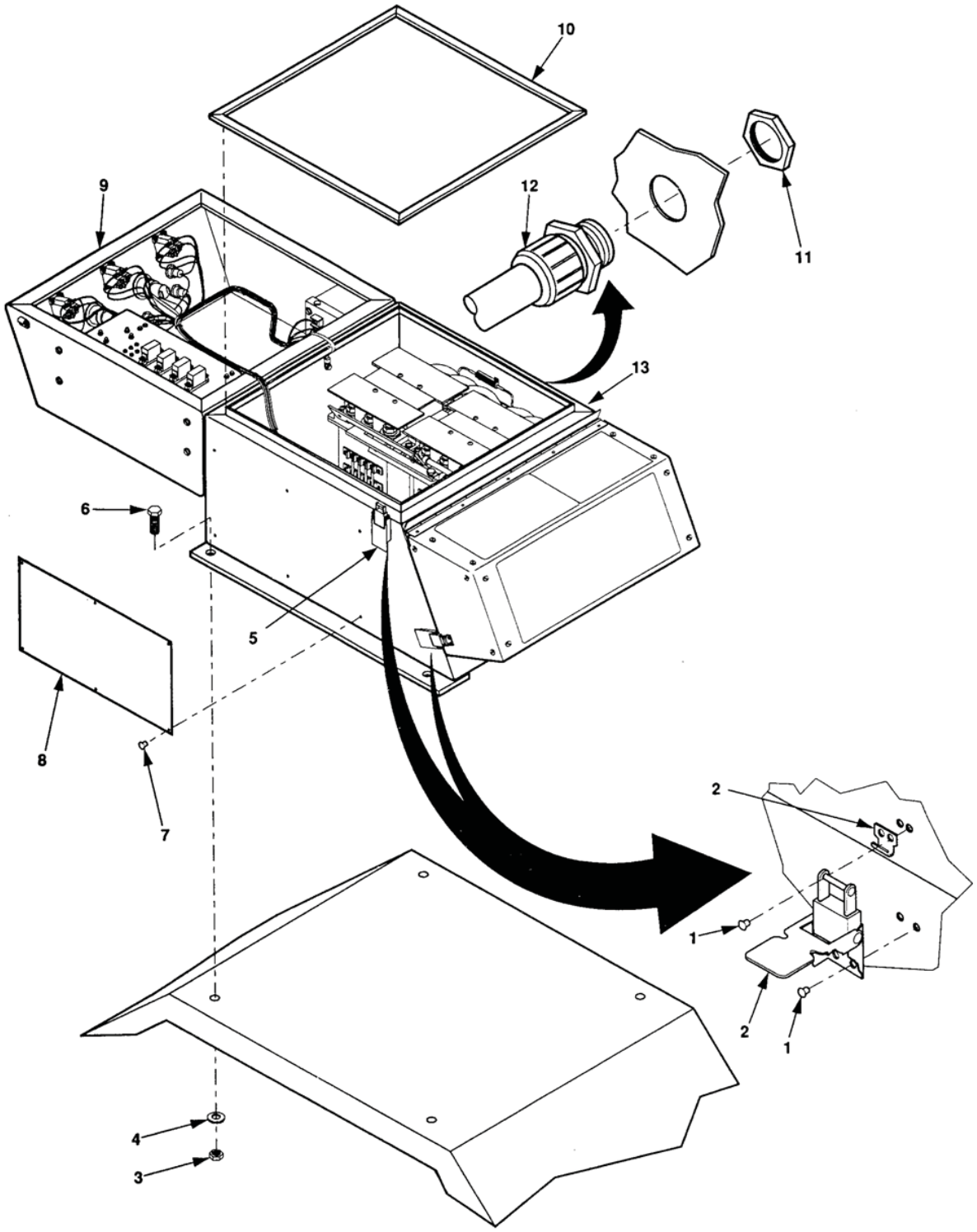

Figure 1. Switch Box Repair (Old Configuration).

END OF TASK

END OF WORK PACKAGE

FIELD MAINTENANCE

10 kW 60 AND 400 Hz TRAILER-MOUNTED POWER UNITS AND POWER PLANTS

SWITCH BOX (NEW): INSPECTION, REPAIR, REMOVAL, INSTALLATION

INITIAL SETUP:

Tools and Special Tools
Tool Kit, General Mechanic's Automotive or Standard Automotive Tool Set (WP 0101, Table 2, Item 9)
¼ Inch Drill (WP 0101, Table 2, Item 5)
Blind Head Riveter (WP 0101, Table 2, Item 4)

Equipment Condition
Both generator sets shut down; WP 0005, Stopping Generator Set.
Trailer handbrakes set, front support leg/landing leg lowered, and rear leveling-support jack lowered; WP 0005, Positioning Power Plant/Power Unit.
Power cables and ground disconnected from switch box; WP 0018.

Materials/Parts
Blind Rivets
Gasket

WARNING

All metal jewelry can conduct electricity and become entangled in generator set components. Remove all jewelry when working on generator set. Failure to comply with this warning can cause injury or death to personnel.

WARNING

DO NOT wear loose clothing when performing checks, services and maintenance. Failure to comply with this warning can cause injury or death to personnel.

WARNING

High voltage is produced when this generator set is in operation. Make sure unit or units are completely shut down and free of any power source before attempting any repair or maintenance on the unit, switch box or when connecting or disconnecting load cables. Failure to comply with this warning can cause injury or death to personnel.

WARNING

High voltage is produced when the generator set is in operation. Never attempt to start the generator set unless it is properly grounded. Failure to comply with this warning can cause injury or death to personnel.

INSPECTION

1. Release clamping catches (Figure 1, Item 5) and open switch box cover (6).
2. Inspect all leads and wires for worn or deteriorated insulation that reveals bare spots in conductors. If found, notify next higher level of maintenance.
3. Inspect all leads and wires for loose or disconnected terminal lugs. If found, repair and/or notify next higher level of maintenance.
4. Inspect all terminals for looseness. Tighten as needed.
5. Inspect all component mountings for looseness. Tighten as needed.

6. Inspect gasket (7) on switch box. If required, replace gasket (WP 0062, Figure 1).
7. Close switch box cover (6) and secure with clamping catches (5).

END OF TASK

REPAIR

1. CLAMPING CATCH REPLACEMENT.
   a. Drill out rivets (1) and remove defective clamping catch (2).
   b. Position new clamping catch (2) and secure with rivets (1).
2. DATA PLATE REPLACEMENT.
   a. Refer to WP 0019, Figure 1, Items 7 and 8.
3. GASKET REPLACEMENT.
   a. Remove old gasket (7) from switch box and scrape surface to remove old cement.
   b. Cut new gasket material and cement to switch box. Refer to WP 0062, Figure 1.
4. STUFFING TUBE REPLACEMENT.
   a. Unscrew locknut (8) from stuffing tube body (9) of stuffing tube and remove from switch box.
   b. Insert stuffing tube body (9) through hole in switch box and secure with locknut (11).

NOTE

Switch box mounting hardware for AN/MJQ-37 and AN/MJQ-38 (plain nuts, lockwashers, flat washers, and cap screws) differs from that used on other power plants but removal and installation instructions are similar.

END OF TASK

REMOVAL

1. Remove power cables and ground cable (WP 0018).
2. Remove four self-locking nuts (Figure 1, Item 3 and WP 0019, Figure 1, Item 3), flat washers (4), and cap screws (6), securing switch box (10) to fender. Remove switch box (13).

END OF TASK

INSTALLATION

1. To install, position switch box (10) on trailer fender.
2. Install four cap screws (3), flat washers (4), and self-locking nuts (not shown).
3. Connect power cables and ground cable (WP 0018).

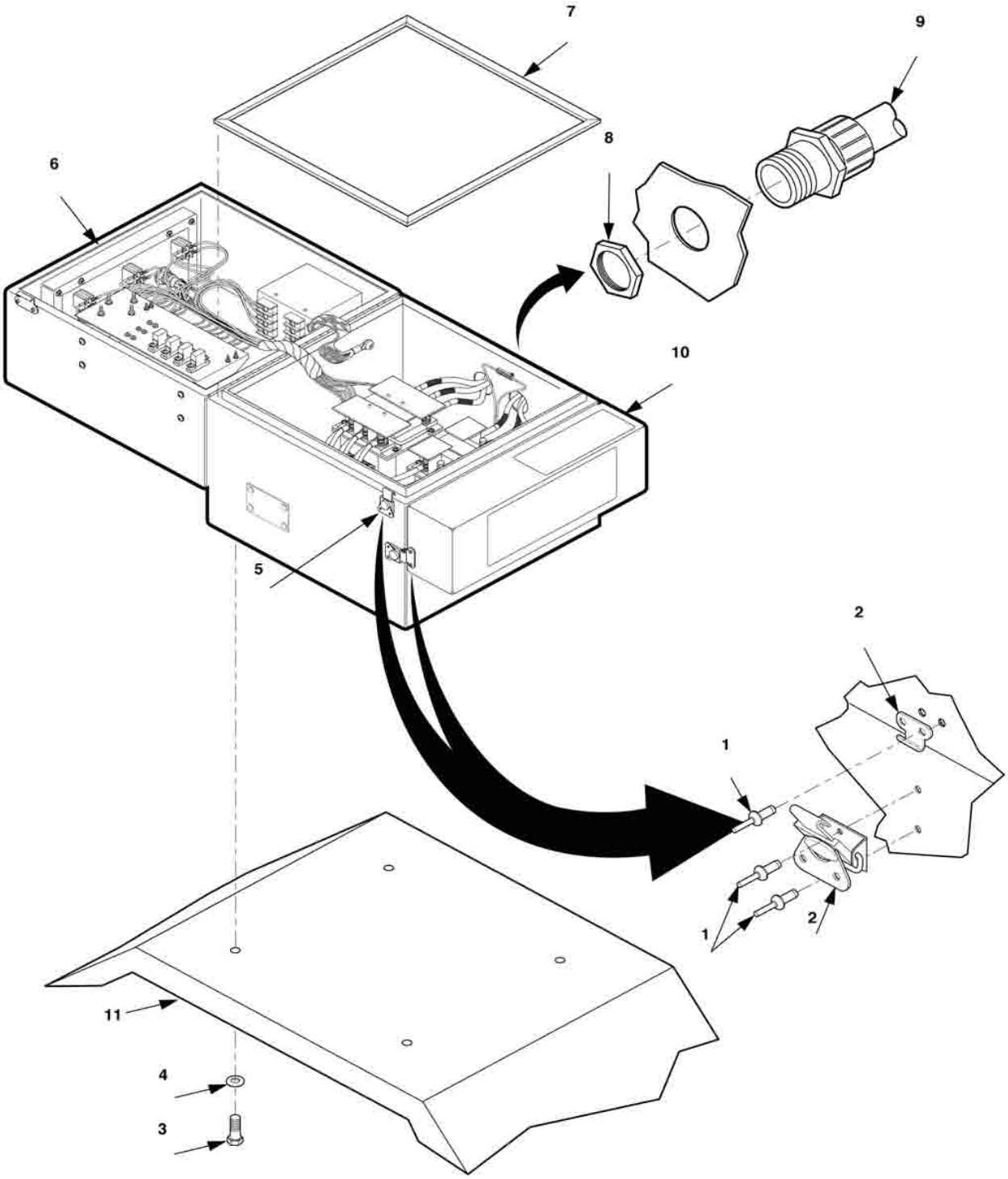

Figure 1. Switch Box Repair (NEW).

END OF TASK

END OF WORK PACKAGE

FIELD MAINTENANCE

10 kW 60 AND 400 Hz TRAILER-MOUNTED POWER UNITS AND POWER PLANTS

INDICATOR LIGHT ASSEMBLY: TESTING, REMOVAL, REPAIR, REPLACEMENT, INSTALLATION

INITIAL SETUP:

Tools and Special Tools
Tool Kit, General Mechanic's Automotive or Standard Automotive Tool Set (WP 0101, Table 2, Item 9)
Soldering Gun GT7A-3 (WP 0101, Table 2, Item 5)
Hand Operated Terminal Crimping Tool (WP 0101, Table 2, Item 5)
Multimeter (WP 0101, Table 2, Item 2)

Equipment Condition
Both generator sets shut down; WP 0005, Stopping Generator Set.
Switch box cover open.

Materials/Parts
Insulation Sleeving, Heat Shrinkable
Terminal, Lug, Crimp, 22-18 AWG, 0.138 Stud
Solder

WARNING

All metal jewelry can conduct electricity and become entangled in generator set components. Remove all jewelry when working on generator set. Failure to comply with this warning can cause injury or death to personnel.

WARNING

DO NOT wear loose clothing when performing checks, services and maintenance. Failure to comply with this warning can cause injury or death to personnel.

WARNING

High voltage is produced when this generator set is in operation. Make sure unit or units are completely shut down and free of any power source before attempting any repair or maintenance on the unit, switch box or when connecting or disconnecting load cables. Failure to comply with this warning can cause injury or death to personnel.

WARNING

Shut down generator sets before removing indicator lamp. Failure to comply with this warning can cause injury or death to personnel.

TESTING

1. Measure for continuity between terminals (Figure 1, Item 5). If continuity exists, replace lamp housing (4).
2. Measure for continuity of indicator light assembly leads (7) between terminals (5 and 8) in accordance with Table 1.

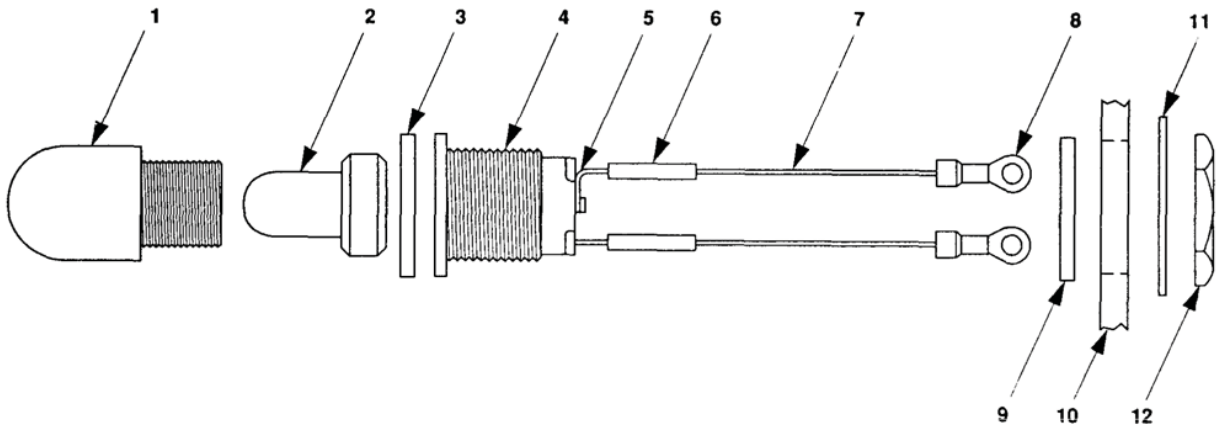

Figure 1. Indicator Light Assembly.

NOTE

For wiring diagram schematic refer to FO-1 Power Plant Wiring Diagram

Table 1. Indicator Light Assembly Test Points.

FROM	TO
DS1 (center contact)	TB2-2
DS1 (side contact)	TB2-1
DS2 (side contact)	TB2-4
DS2 (center contact)	TB2-5
DS3 (side contact)	TB2-1
DS3 (center contact)	S1-3
DS4 (side contact)	TB2-4
DS4 (center contact)	S2-3

END OF TASK

REMOVAL

WARNING

High voltage is produced when this generator set is in operation. Make sure unit or units are completely shut down and free of any power source before attempting any repair or maintenance on the unit, switch box or when connecting or disconnecting load cables. Failure to comply with this warning can cause injury or death to personnel.

WARNING

Shut down generator sets before removing indicator lamp. Failure to comply with this warning can cause injury or death to personnel.

1. Unscrew lens (Figure 1, Item 1) and remove and save lens (1), lamp (2), and O-ring (3).

NOTE

Spare bulb assemblies do not come with leads. Unsolder for removal.

2. Tag and disconnect terminal leads (7) from applicable switch box components.
3. Cut wire ties as required.
4. Remove nut (12) and lockwasher (11).
5. Pull housing (4) and attached parts (5 through 8) through opening in switch box cover (10).

END OF TASK

REPAIR

1. DISASSEMBLY
   a. Unscrew and remove lens (Figure 1, Item 1). Do not take O-ring (3) out of lens (1).
   b. Take lamp (2) out of lens (1) or housing (4), as applicable.
   c. Remove O-ring (9).
   d. Cut and remove insulation sleeving (6) from both wire leads (7).
   e. Unsolder and remove wire leads (7) from terminals (5).
2. ASSEMBLY
   a. Solder one end of each wire (7) to a housing terminal (5).
   b. Install insulation sleeving (6) over each soldered connection and heat shrink to a firm fit.
   c. Crimp a terminal lug (8) onto end of each wire (7).
   d. Install O-ring (9).

END OF TASK

REPLACEMENT

Replace is the same as removal and installation.

END OF TASK

INSTALLATION

1. Insert terminal leads (Figure 1, Item 7 and WP 0022, Figure 1, Item 7) through opening in switch box housing (10) and pull through until O-ring (9) rests against switch box cover (10).
2. Install lockwasher (11) and mounting nut (12).
3. Connect terminal lugs (8) to switch box components in accordance with Table 1.
4. Insert lamp (2) and O-ring (3) into lens (1).
5. Install lens (1) into housing (4) and hand tighten.

END OF TASK

END OF WORK PACKAGE

FIELD MAINTENANCE

10 kW 60 AND 400 Hz TRAILER-MOUNTED POWER UNITS AND POWER PLANTS

SYNCHRONIZING LIGHT: TESTING, REPAIR, REMOVAL, INSTALLATION, REPLACEMENT

INITIAL SETUP:

Tools and Special Tools
Tool Kit, General Mechanic's Automotive or Standard Automotive Tool Set (WP 0101, Table 2, Item 9)
Multimeter (WP 0101, Table 2, Item 2)

Equipment Condition
Both generator sets shut down; WP 0005, Stopping Generator Set.
Switch box cover open.

Materials/Parts
Blind Rivets
Gasket
Lamp

WARNING

All metal jewelry can conduct electricity and become entangled in generator set components. Remove all jewelry when working on generator set. Failure to comply with this warning can cause injury or death to personnel.

WARNING

DO NOT wear loose clothing when performing checks, services and maintenance. Failure to comply with this warning can cause injury or death to personnel.

WARNING

High voltage is produced when this generator set is in operation. Make sure unit or units are completely shut down and free of any power source before attempting any repair or maintenance on the unit, switch box or when connecting or disconnecting load cables. Failure to comply with this warning can cause injury or death to personnel.

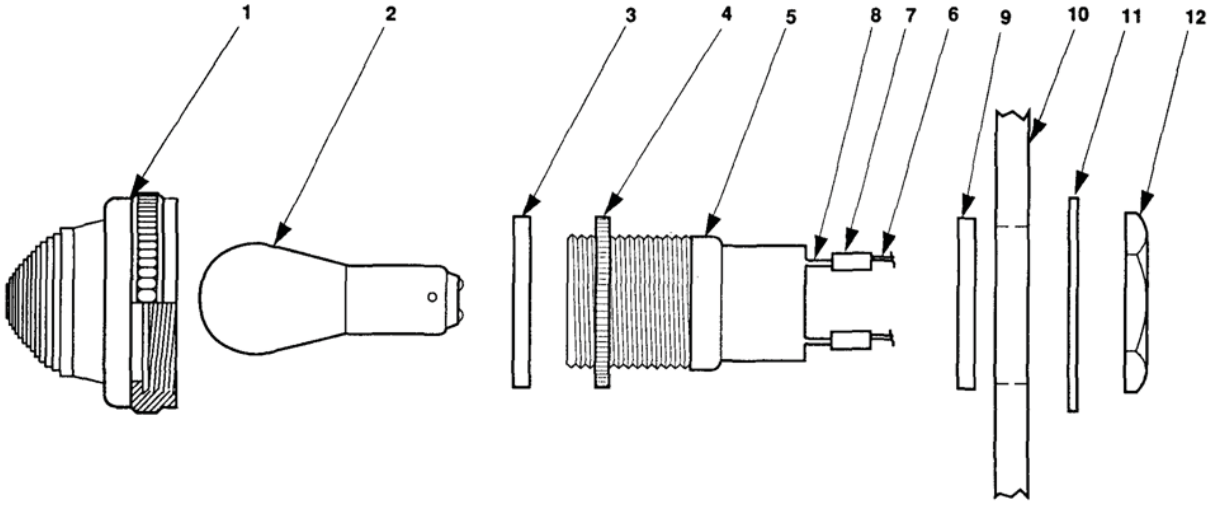

Figure 1. Synchronizing Light.

TESTING

Remove lens (Figure 1, Item 1) and bulb (2) and measure for continuity between terminals (8). If continuity exists, replace lamp housing.

WARNING

High voltage is produced when this generator set is in operation. Make sure unit or units are completely shut down and free of any power source before attempting any repair or maintenance on the unit, switch box or when connecting or disconnecting load cables. Failure to comply with this warning can cause injury or death to personnel.

WARNING

Shut down generator sets before removing indicator lamp. Failure to comply with this warning can cause injury or death to personnel.

END OF TASK

REPAIR

Refer to WP 0021 Disassembly and Assembly using Figure 1.

END OF TASK

REMOVAL

NOTE

The switch box has three SYNCHRONIZING lights. Replacement procedures are the same for each SYNCHRONIZING lights.

1. Cut and remove insulation sleeving (7) from both leads (6).
2. Tag leads (6) and unsolder.
3. Remove mounting nut (12), internal tooth lockwasher (11), and housing body (5).

END OF TASK

INSTALLATION

1. Position rubber gaskets (3 and 9) against mounting collar (4). If necessary, turn mounting collar (4) until proper amount of threads are exposed for installation of lens (1).
2. Insert housing body (5) through opening in switch box cover (10).
3. Place internal tooth lockwasher (11) on housing body (5).
4. Install mounting nut (12) on housing body (5). Tighten mounting nut (12) so that rubber gasket (9) seats firmly against switch box (10).
5. Install insulation sleeving (7) on each wire (6).
6. Solder tagged wires (6) to housing terminals (8).
7. Install lamp (2) into housing body (5).
8. Make sure that rubber gasket (3) is in place against mounting collar (4) and install lens (1) on housing body (5).

END OF TASK

REPLACEMENT

Replace is the same as removal and installation.

END OF TASK

END OF WORK PACKAGE

FIELD MAINTENANCE

10 kW 60 AND 400 Hz TRAILER-MOUNTED POWER UNITS AND POWER PLANTS

TOGGLE SWITCH: TESTING, REMOVAL, INSTALLATION, REPLACEMENT

INITIAL SETUP:

Tools and Special Tools
Tool Kit, General Mechanic's Automotive or Standard Automotive Tool Set (WP 0101, Table 2, Item 9)
Multimeter AN/PSM-45 (WP 0101, Table 2, Item 2)

Equipment Condition
Both generator sets shut down; WP 0005, Stopping Generator Set.
Switch box cover open.

Materials/Parts
None

WARNING

All metal jewelry can conduct electricity and become entangled in generator set components. Remove all jewelry when working on generator set. Failure to comply with this warning can cause injury or death to personnel.

WARNING

DO NOT wear loose clothing when performing checks, services and maintenance. Failure to comply with this warning can cause injury or death to personnel.

WARNING

Shut down generator sets before removing indicator lamp. Failure to comply with this warning can cause injury or death to personnel.

TESTING

NOTE

The following procedures apply to all toggle switches.

Set multimeter for continuity test. Test switches in accordance with Table 1. Replace any switch that fails test.

Table 1. Switch Continuity Test.

	S10 TRANSFER SWITCH		S1 AND S2 ON-LINE SWITCHES	
	Closed Contact	Open Contact	Closed Contact	Open Contact
On Position	1 and 2 4 and 5		2 and 3 5 and 6	
Released Position		1 and 2 4 and 5	2 and 3	5 and 6

END OF TASK

REMOVAL

WARNING

High voltage is produced when this generator set is in operation. Make sure unit or units are completely shut down and free of any power source before attempting any repair or maintenance on the unit, switch box or when connecting or disconnecting load cables. Failure to comply with this warning can cause injury or death to personnel.

WARNING

Shut down generator sets before removing indicator lamp. Failure to comply with this warning can cause injury or death to personnel.

1. Tag wires connected to terminals of switch to be replaced and remove screws (WP 0022, Figure 1, Item 9), flat washers (8), and conductor bus (7).
2. Remove hex nut (1), lockwasher (2), locking ring (3), and switch 6.

END OF TASK

INSTALLATION

1. Remove hex nut (1), lockwasher (2), and locking ring (3).
2. Hand tighten hex nut (5) on switch.

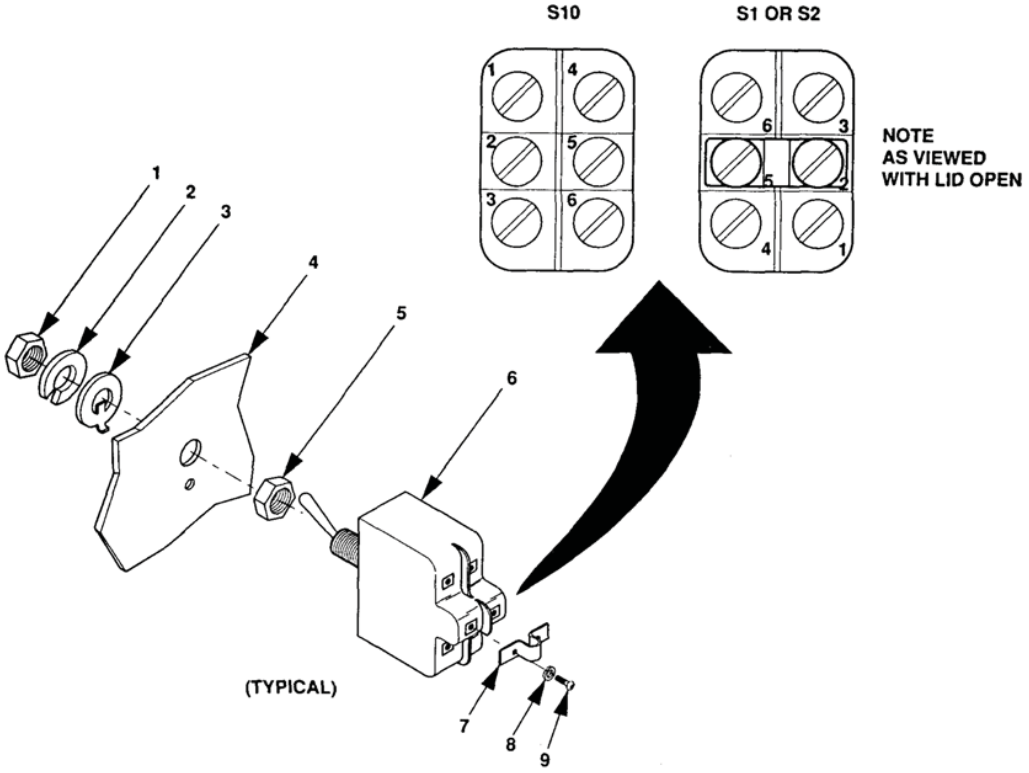

Figure 1. Toggle Switch.

NOTE

Make sure terminals 3 and 6 of switch S10 and 1 and 4 of switches S1 and S2 are toward the bottom as viewed with switch box open.

3. Insert switch body (6) into mounting hole and position hex nut (5) against mounting plate (4).
4. Install locking ring (3) into keyway of switch until alignment tip goes into mounting plate (4).
5. Install lockwasher (2) against locking ring (3).
6. Install hex nut (1) and tighten making sure that locking ring (3) alignment is engaged in mounting plate (4).

NOTE

When installing new switch, conductor bus from old switch must be installed on new switch.

7. Remove and retain terminal screws (9) and washers (8) from terminals of new switch.
8. Install wires, conductor bus (7), washers (8), and terminal screws (9).

END OF TASK

REPLACEMENT

Replace is the same as removal and installation.

END OF TASK

END OF WORK PACKAGE

FIELD MAINTENANCE

10 kW 60 AND 400 Hz TRAILER-MOUNTED POWER UNITS AND POWER PLANTS

SWITCH BOX LOAD TERMINAL: INSPECTION, REMOVAL, REPAIR, INSTALLATION, REPLACEMENT

INITIAL SETUP:

Tools and Special Tools
Tool Kit, General Mechanic's Automotive or Standard Automotive Tool Set (WP 0101, Table 2, Item 9)

Equipment Condition
Both generator sets shut down; WP 0005, Stopping Generator Set.
Trailer handbrakes set, front support leg/landing leg lowered, and rear leveling-support jack lowered; WP 0005, Positioning Power Plant/Power Unit.
Load cable disconnected from switch box load terminals.

Materials/Parts
Blind Rivets
Gasket
Wire, round steel 0.072" diameter QQ-W-423 Composition 302

INSPECTION

Inspect for corrosion, broken terminal clip, damaged threads etc.

WARNING

All metal jewelry can conduct electricity and become entangled in generator set components. Remove all jewelry when working on generator set. Failure to comply with this warning can cause injury or death to personnel.

WARNING

DO NOT wear loose clothing when performing checks, services and maintenance. Failure to comply with this warning can cause injury or death to personnel.

WARNING

High voltage is produced when this generator set is in operation. Make sure unit or units are completely shut down and free of any power source before attempting any repair or maintenance on the unit, switch box or when connecting or disconnecting load cables. Failure to comply with this warning can cause injury or death to personnel.

WARNING

Shut down generator sets before removing indicator lamp. Failure to comply with this warning can cause injury or death to personnel.

NOTE

See wiring diagram FO-1 for the number of wires on each terminal.

END OF TASK

REMOVAL

1. Release clamping catches (Figure 1, Sheet 1, Item 12) and open switch box cover (2).
2. Remove and retain hex nut (3), internal tooth lockwasher (4), and leads (5) from defective load terminal (8).

3. Remove and retain hex nut (6) that secures the load terminal (8) to the mounting plate (7).
4. Remove load terminal (8).

END OF TASK

REPAIR

NOTE

If repair consists of replacing a missing or damaged terminal clip. Removal of load terminal Is not required. Any other damage to the load terminal requires replacement. The terminal clip is fabricated using bulk wire National Stock Number (NSN) 9505-00-235-5071.

1. Release clamping catch (11) and open switch box load terminal cover (1).
2. Cut two pieces of bulk wire 5 3/4 inches and 1 1/4 inches long.
3. Make sure nut (9) is installed on terminal body (8).
4. Fabricate terminal clip (10) in accordance with Figure 1 (Sheet 2).
5. Install terminal clip (10) on load terminal (8), close switch box terminal cover (1) and secure with clamping catch.

NOTE

See wiring diagram FO-1 for the number of wires on each terminal.

END OF TASK

INSTALLATION

1. Position new load terminal (Figure 1, Sheet 1, Item 8) on mounting plate so that alignment pin fits in hole provided.
2. Install and tighten the hex nut (6).
3. Install the leads (5).
4. Install internal tooth lockwasher (4) and thread hex nut (3) on load terminal (8) and tighten.
5. Close switch box terminal cover (1) and switch box cover (2), and secure with clamping catches (11 and 12).

END OF TASK

REPLACEMENT

Replace is the same as removal and installation.

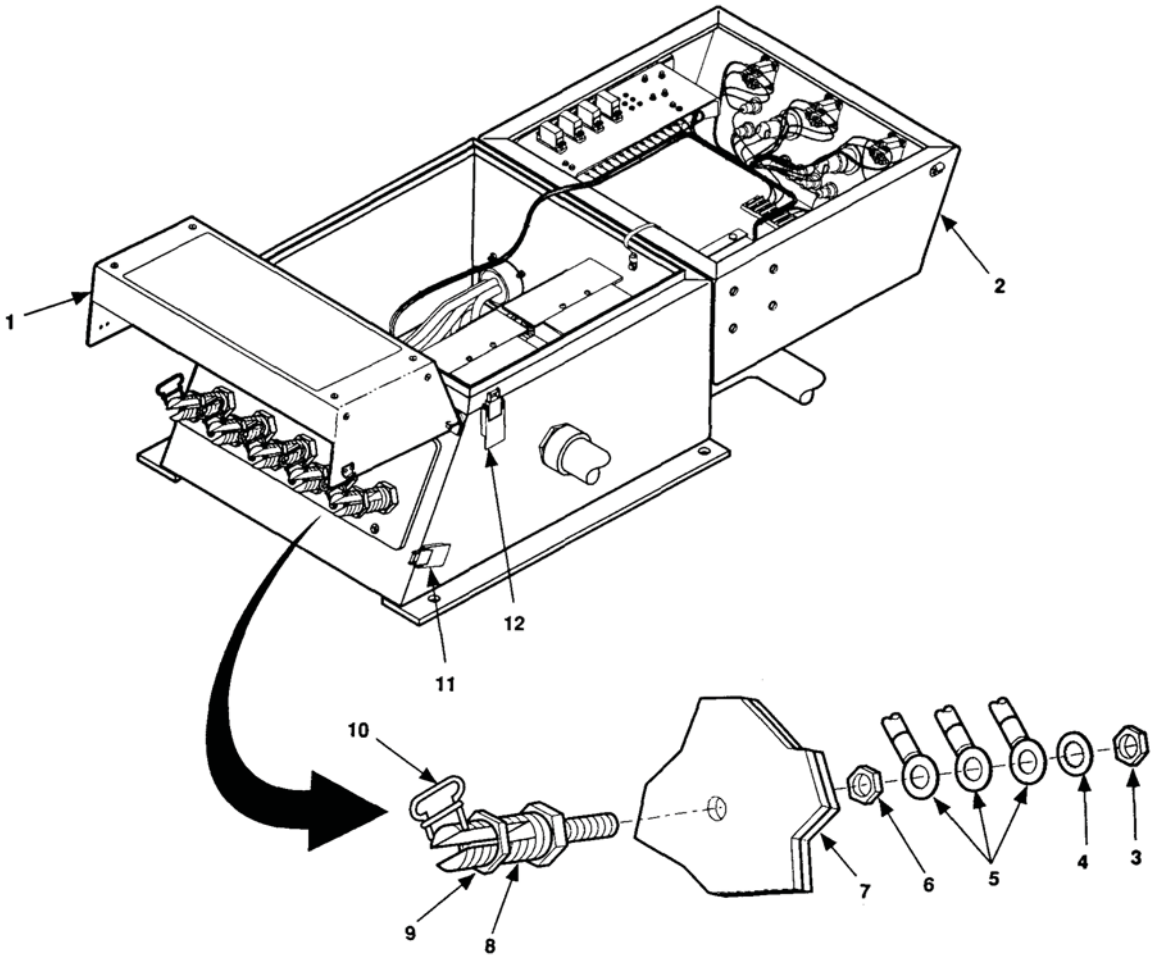

Figure 1. Switch Box Load Terminal Maintenance (Sheet 1 of 2).

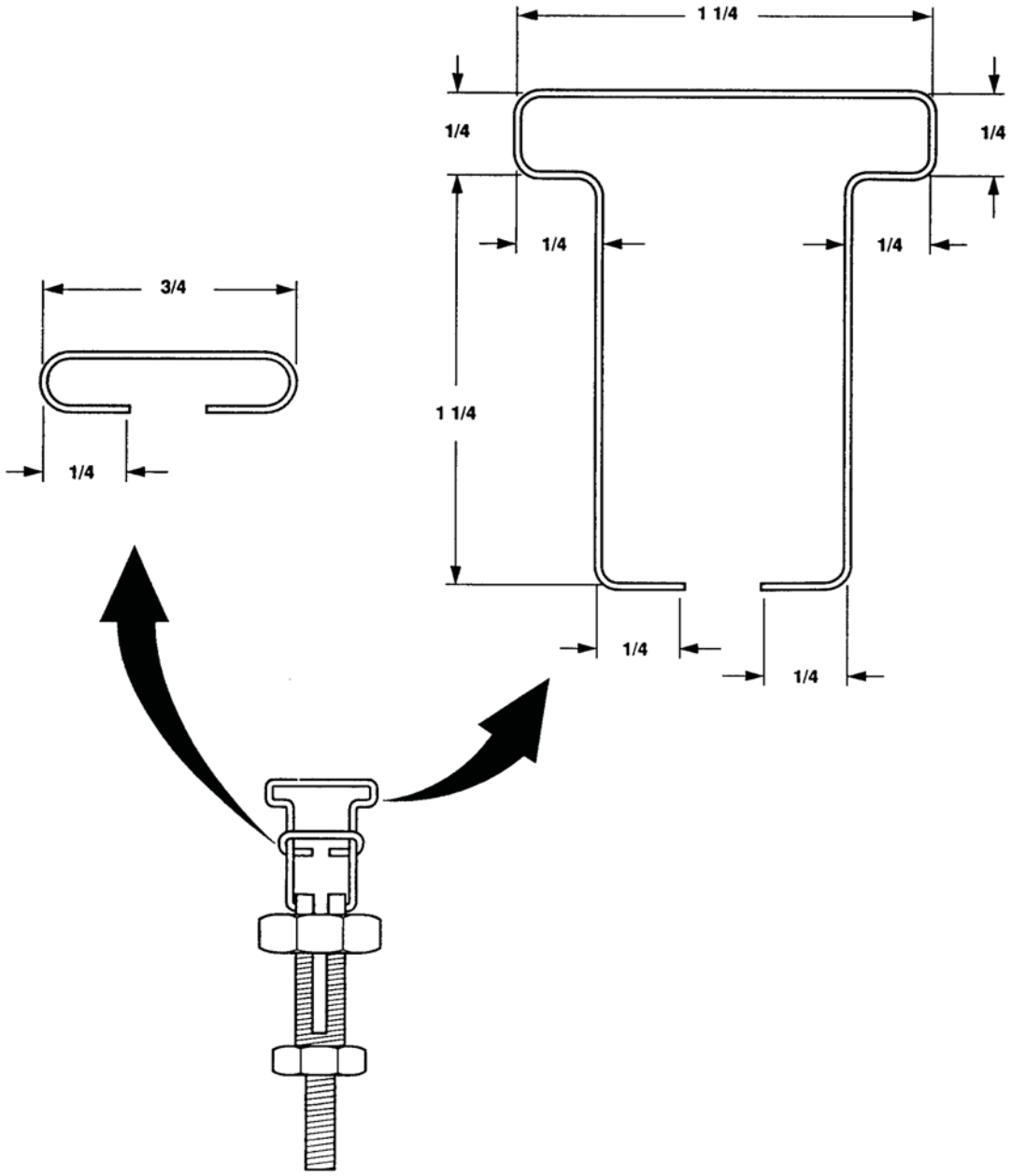

Figure 1. Switch Box Load Terminal Maintenance (Sheet 2 of 2).

END OF TASK

END OF WORK PACKAGE

FIELD MAINTENANCE

10 kW 60 AND 400 Hz TRAILER-MOUNTED POWER UNITS AND POWER PLANTS

LOAD TERMINAL COVER (OLD): INSPECTION, REMOVAL, INSTALLATION, REPLACEMENT

INITIAL SETUP:

Tools and Special Tools
Tool Kit, General Mechanic's Automotive or Standard Automotive Tool Set (WP 0101, Table 2, Item 9)

Equipment Condition
Both generator sets shut down; WP 0005, Stopping Generator Set.

Materials/Parts
None

WARNING

All metal jewelry can conduct electricity and become entangled in generator set components. Remove all jewelry when working on generator set. Failure to comply with this warning can cause injury or death to personnel.

WARNING

DO NOT wear loose clothing when performing checks, services and maintenance. Failure to comply with this warning can cause injury or death to personnel.

WARNING

High voltage is produced when this generator set is in operation. Make sure unit or units are completely shut down and free of any power source before attempting any repair or maintenance on the unit, switch box or when connecting or disconnecting load cables. Failure to comply with this warning can cause injury or death to personnel.

INSPECTION

Inspect for corrosion and damaged parts.

END OF TASK

REMOVAL

1. Release clamping catches (Figure 1, Item 1) and open switch box cover (2).
2. Release clamping catches (3) and open load terminal cover (4).
3. Remove six nuts (5), lockwashers (6), screws (7), and flat washers (8) and remove load terminal cover (4) and stop (9) from switch box (10).

NOTE

If replacing load terminal cover, Step 4 must be performed.

4. Remove four rivets (11) and two clamping catch strikes (12). Retain strikes for installation on new cover.

END OF TASK

INSTALLATION

1. Install load terminal cover (4) and stop (9) on switch box (10) with six screws (7), flat washers (8), lockwashers (6), and nuts (5).

2. Close load terminal cover (4) and secure with clamping catches (3).
3. Close switch box cover (2) and secure with two clamping catches (1).

END OF TASK

REPLACEMENT

Replace is the same as removal and installation.

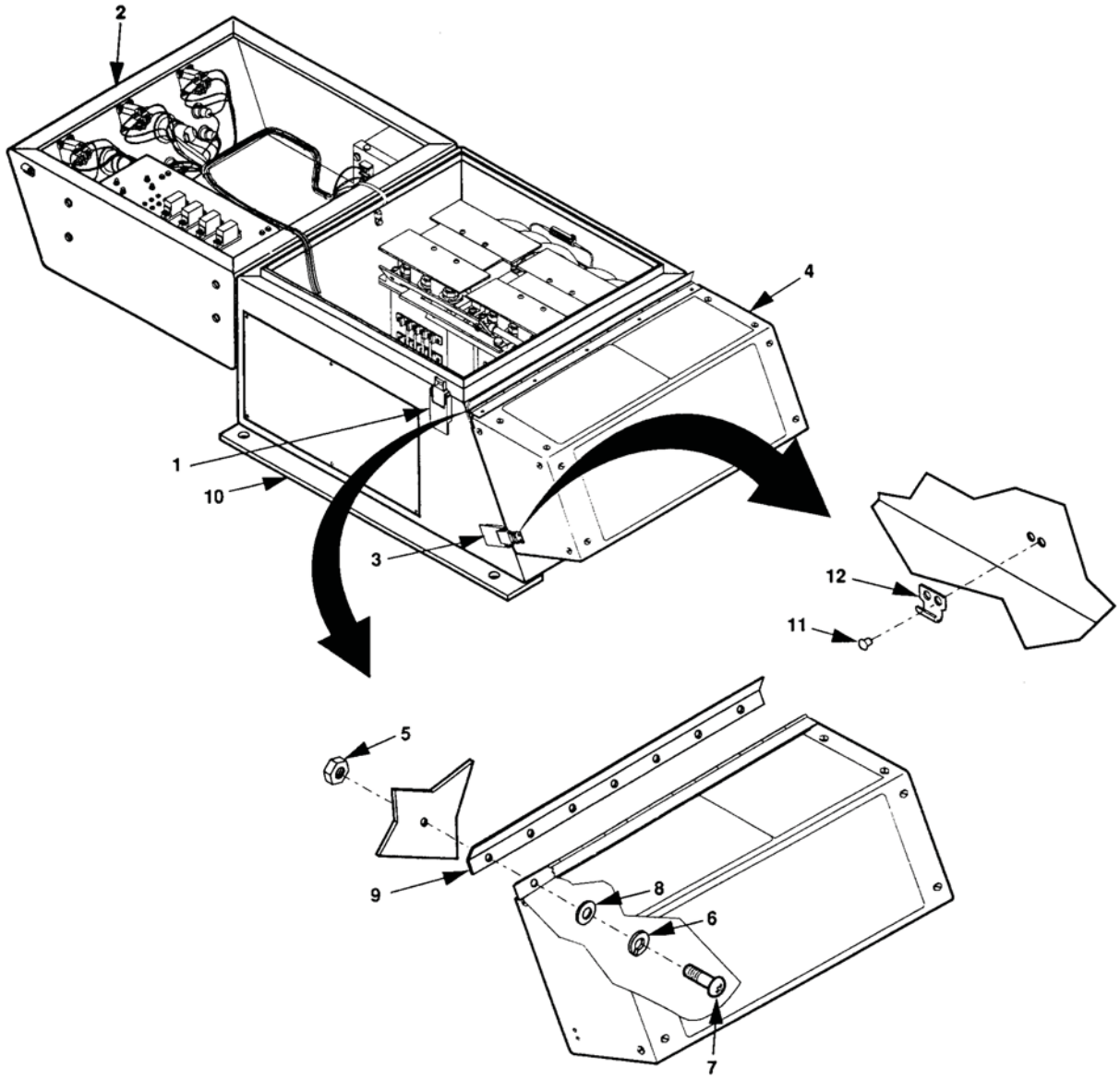

Figure 1. Load Terminal Cover (OLD).

END OF TASK

END OF WORK PACKAGE

FIELD MAINTENANCE

10 kW 60 AND 400 Hz TRAILER-MOUNTED POWER UNITS AND POWER PLANTS

LOAD TERMINAL COVER (NEW): INSPECTION, REMOVAL, INSTALLATION, REPLACEMENT

INITIAL SETUP:

Tools and Special Tools
Tool Kit, General Mechanic's Automotive or Standard Automotive Tool Set (WP 0101, Table 2, Item 9)

Equipment Condition
Both generator sets shut down; WP 0005, Stopping Generator Set.

Materials/Parts
None

WARNING

All metal jewelry can conduct electricity and become entangled in generator set components. Remove all jewelry when working on generator set. Failure to comply with this warning can cause injury or death to personnel.

WARNING

DO NOT wear loose clothing when performing checks, services and maintenance. Failure to comply with this warning can cause injury or death to personnel.

WARNING

High voltage is produced when this generator set is in operation. Make sure unit or units are completely shut down and free of any power source before attempting any repair or maintenance on the unit, switch box or when connecting or disconnecting load cables. Failure to comply with this warning can cause injury or death to personnel.

INSPECTION

Inspect for corrosion and damaged parts.

END OF TASK

REMOVAL

1. Release clamping catches (Figure 1, Item 1) and open switch box cover (2).
2. Release clamping catches (3) and open load terminal cover (4).
3. Remove six rivets (6) and remove load terminal cover (4) from switch box (7).
4. Remove six rivets (6) and remove butt hinge on load terminal cover (4).
5. Remove four rivets (6) and two clamping catch strikes (5). Retain strikes for installation on new cover.

NOTE

If replacing load terminal cover, Step 3 and 4 must be performed.

END OF TASK

INSTALLATION

1. Install load terminal cover (4) on switch box (7) with six rivets (6).

2. Close load terminal cover (4) and secure with clamping catches (3).
3. Close switch box cover (2) and secure with two clamping catches (1).

END OF TASK

REPLACEMENT

Replace is the same as removal and installation.

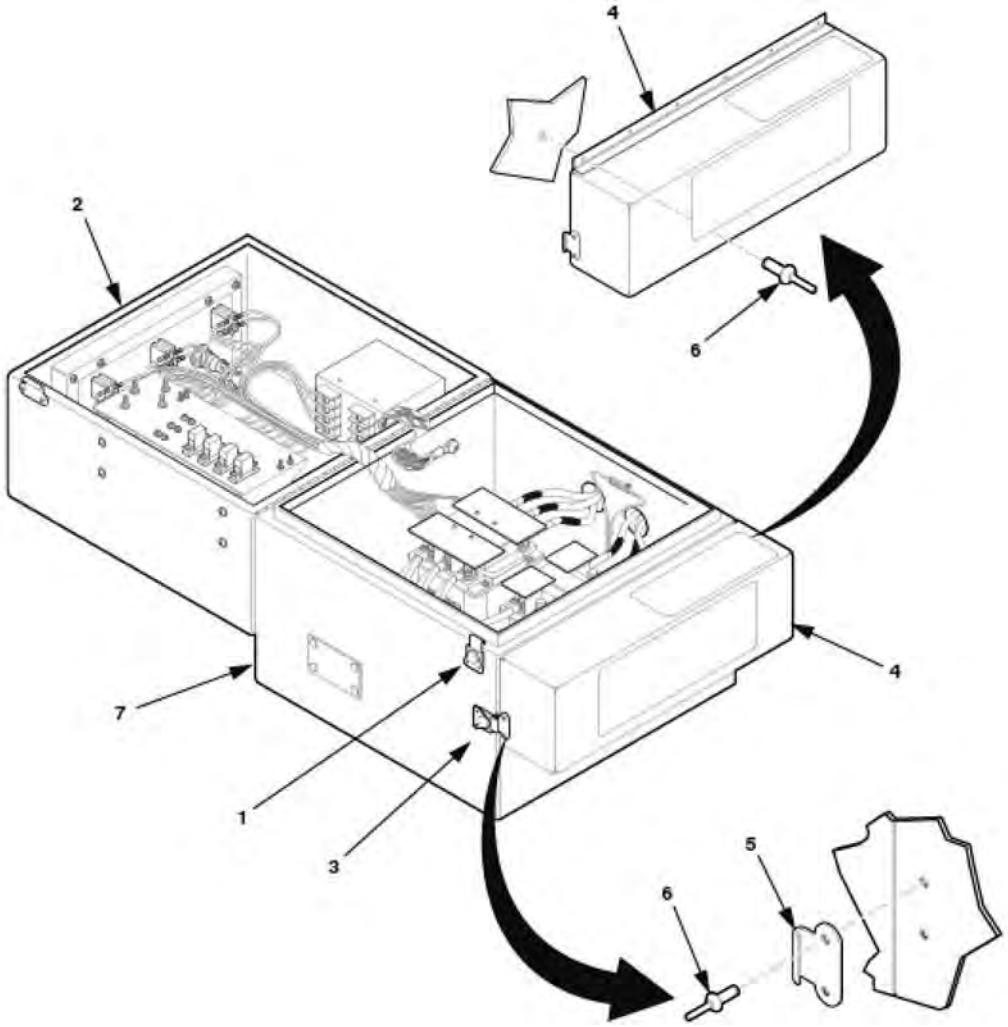

Figure 1. Load Terminal Cover (NEW).

END OF TASK

END OF WORK PACKAGE

FIELD MAINTENANCE

10 kW 60 AND 400 Hz TRAILER-MOUNTED POWER UNITS AND POWER PLANTS

ACCESSORY BOX: INSPECTION, REMOVAL, REPAIR, INSTALLATION, REPLACEMENT

INITIAL SETUP:

Tools and Special Tools
Tool Kit, General Mechanic's Automotive or Standard Automotive Tool Set (WP 0101, Table 2, Item 9)
¼ Inch Drill (WP 0101, Table 2, Item 5)
Blind Hand Riveter (WP 0101, Table 2, Item 4)

Equipment Condition
Both generator sets shut down; WP 0005, Stopping Generator Set.
Trailer handbrakes set, front support leg/landing leg lowered, and rear leveling-support jack lowered; WP 0005, Positioning Power Plant/Power Unit.

Materials/Parts
Catch, Clamping and Strike
Hasp
Nuts, Self-locking
Rivets, Blind
Washers, Lock (WP 0105, Table 1, Item 12)

WARNING

All metal jewelry can conduct electricity and become entangled in generator set components. Remove all jewelry when working on generator set. Failure to comply with this warning can cause injury or death to personnel.

WARNING

DO NOT wear loose clothing when performing checks, services and maintenance. Failure to comply with this warning can cause injury or death to personnel.

INSPECTION

Inspect for corrosion and damaged parts.

END OF TASK

REMOVAL

1. Release clamping catches (Figure 1, Item 4) and open accessory box cover (4).

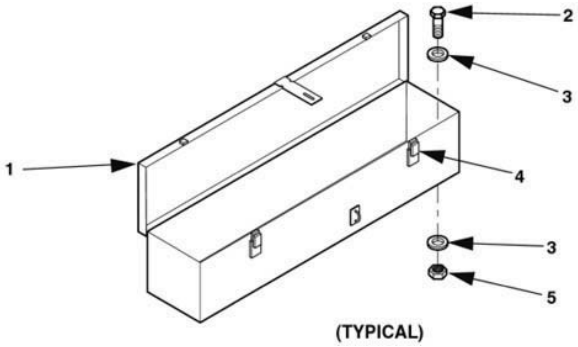

Figure 1. Replace Accessory Box.

2. Remove accessories from accessory box.

NOTE

AN/MJQ-37 and AN/MJQ-38 accessory box is attached at three points. AN/MJQ-37, AN/MJQ-38, PU-798, and PU-798A accessory box is attached at four points. The two forward mounting screws on AN/MJQ-37 and PU-798A accessory boxes are longer than the rear two.

3. Remove self-locking nuts (5), flat washers (3), machine bolts (2), and accessory box (1).

END OF TASK

REPAIR

NOTE

Field level maintenance of the accessory box consists of replacing clamping catches and hasp. Other repairs, such as straightening or welding, are performed at next higher level of maintenance.

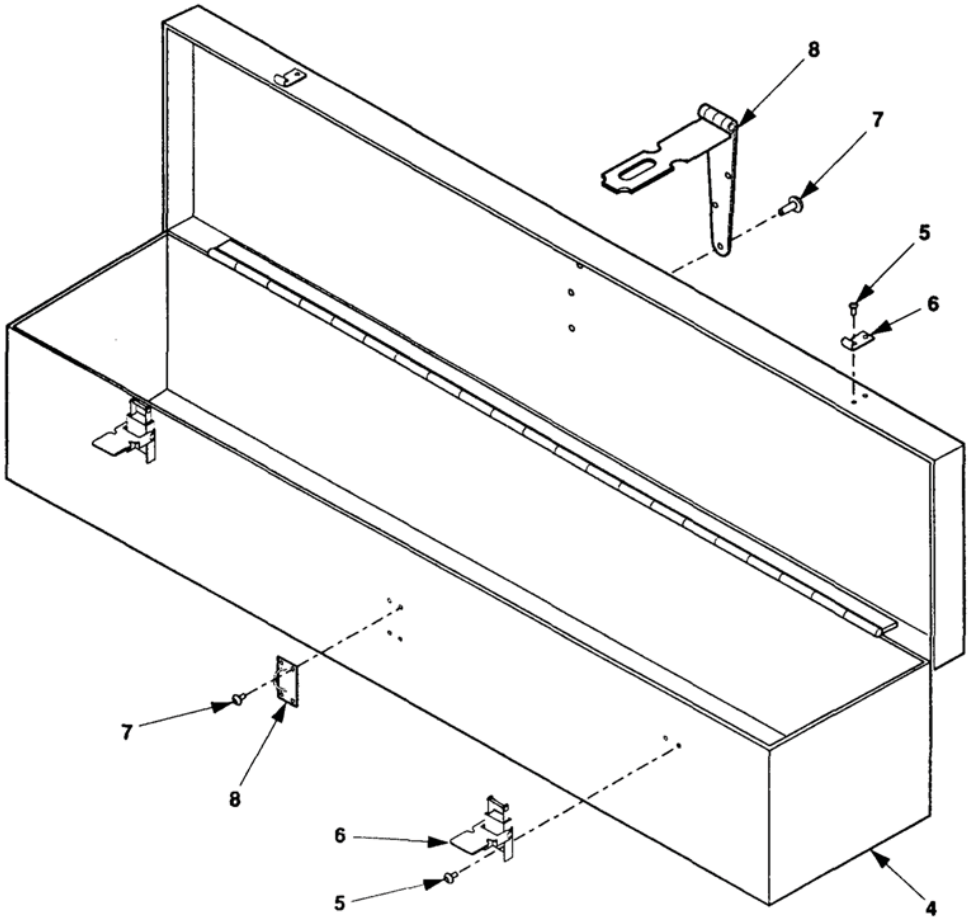

Figure 2. Repair Accessory Box.

1. REPLACE CLAMPING CATCH.
   a. Drill out rivets (Figure 2, Item 5) that secure defective clamping catch and strike (6) to accessory box and remove clamping catch and strike (6).
   b. Install new clamping catch and strike (6) on accessory box (4) and secure with rivets (5).
2. REPLACE HASP.
   a. Drill out rivets (7) on hasp (8).
   b. Install new hasp (8) on accessory box (4) with rivets (7).

END OF TASK

INSTALLATION

1. Position accessory box (Figure 2) over mounting holes in trailer.
2. Install flat washers (3), machine bolts (2), and self-locking nut (5).
3. Return accessories to accessory box.
4. Close accessory box cover and secure with clamping catches (4).

END OF TASK

REPLACEMENT

Replace is the same as removal and installation.

END OF TASK

END OF WORK PACKAGE

FIELD MAINTENANCE

10 kW 60 AND 400 Hz TRAILER-MOUNTED POWER UNITS AND POWER PLANTS

FIRE EXTINGUISHER BRACKET: REMOVAL, INSTALLATION, REPLACEMENT

INITIAL SETUP:

Tools and Special Tools
Tool Kit, General Mechanic's Automotive or Standard Automotive Tool Set (WP 0101, Table 2, Item 9)

Equipment Condition
Trailer handbrakes set, front support leg/landing leg lowered, and rear leveling-support jack lowered; WP 0005, Positioning Power Plant/Power Unit.

Materials/Parts
Nuts, Self-locking
Washers, Lock (WP 0105, Table 1, Item 11)

WARNING

All metal jewelry can conduct electricity and become entangled in generator set components. Remove all jewelry when working on generator set. Failure to comply with this warning can cause injury or death to personnel.

WARNING

DO NOT wear loose clothing when performing checks, services and maintenance. Failure to comply with this warning can cause injury or death to personnel.

REMOVAL

1. Remove fire extinguisher from bracket.
2. Remove four self-locking nuts, flat washers, cap screws, and remove fire extinguisher bracket.

END OF TASK

INSTALLATION

1. Install fire extinguisher bracket, four cap screws, flat washers, and self-locking nuts. Tighten self-locking nuts.
2. Place fire extinguisher in bracket.

END OF TASK

REPLACEMENT

Replace is the same as removal and installation.

END OF TASK

END OF WORK PACKAGE

FIELD MAINTENANCE

10 kW 60 AND 400 Hz TRAILER-MOUNTED POWER UNITS AND POWER PLANTS

TRAILER LIFTING RING: REMOVAL

INITIAL SETUP:

Tools and Special Tools
General Mechanic's Tool Kit (WP 0101, Table 2, Item 9)
Wrench, Torque, 800 Newton-Meter (WP 0101, Table 2, Item 5)

Personnel Required
Two

Materials/Parts
Nut, Self-locking

Equipment Condition
Trailer handbrakes set, front support leg/landing leg lowered, and rear leveling-support jack lowered; WP 0005, Positioning Power Plant/Power Unit.

WARNING

All metal jewelry can conduct electricity and become entangled in generator set components. Remove all jewelry when working on generator set. Failure to comply with this warning can cause injury or death to personnel.

WARNING

DO NOT wear loose clothing when performing checks, services and maintenance. Failure to comply with this warning can cause injury or death to personnel.

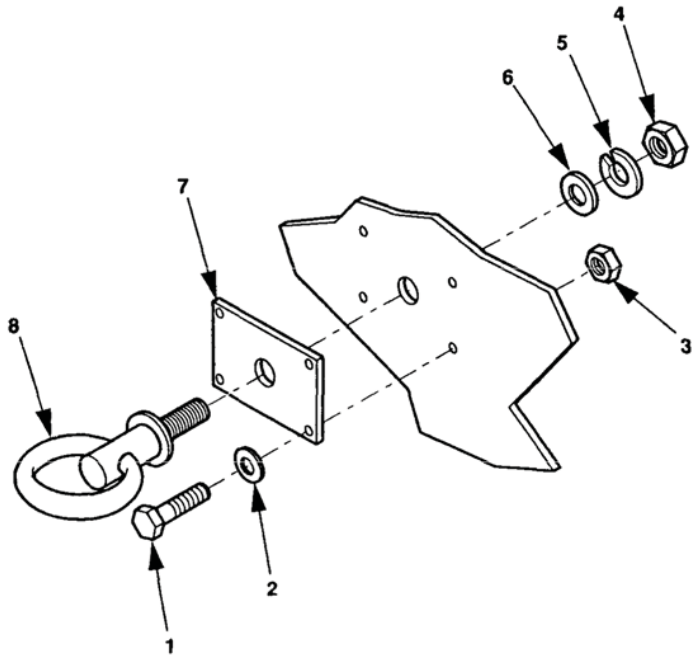

Figure 1. Replace Trailer Lifting Ring.

REMOVAL

1. Remove self-locking nuts (Figure 1, Item 3), flat washers (2), screws (1) and mounting plate (7).
2. Remove self-locking nuts (7), flat washers (6), screws (5) and mounting plate (10);

END OF TASK

END OF WORK PACKAGE

FIELD MAINTENANCE

10 kW 60 AND 400 Hz TRAILER-MOUNTED POWER UNITS AND POWER PLANTS

DATA PLATE AND REFLECTOR: REPLACEMENT

INITIAL SETUP:

Tools and Special Tools
Tool Kit, General Mechanic's Automotive or Standard Automotive Tool Set (WP 0101, Table 2, Item 9)
¼ Inch Drill (WP 0101, Table 2, Item 5)
Twist, Drill, 3/16-inch (WP 0101, Table 2, Item 5)
Riveter, Blind Head (WP 0101, Table 2, Item 4)

Equipment Condition
Trailer handbrakes set, front support leg/landing leg lowered, and rear leveling-support jack lowered; WP 0005, Positioning Power Plant/Power Unit.

Materials/Parts
Plate, Identification/Transportation Data
Screws, Drive
(WP 0105, Table 1, Item 1)
Rivets

WARNING

All metal jewelry can conduct electricity and become entangled in generator set components. Remove all jewelry when working on generator set. Failure to comply with this warning can cause injury or death to personnel.

WARNING

DO NOT wear loose clothing when performing checks, services and maintenance. Failure to comply with this warning can cause injury or death to personnel.

REPLACEMENT

1. REPLACE DATA PLATE.

NOTE

For AN/PU-798 and PU-799 data plates refer to trailer chassis TM 9-2330-202-14&P. For AN/MJQ-37 and AN/MJQ-38 data plates refer to trailer chassis TM 9-2330-213-14&P. For AN/PU-798A and PU-799A data plates refer to trailer chassis TM 9-2330-392-14&P.

   a. Drill out rivets (Figure 1, Item 4) and remove data plate (3).
   b. Position data plate (3) on trailer and install rivets (4).
2. REPLACE REFLECTORS.
   a. Remove self-locking nuts (5), flat washers (6), screws (8), and reflector (7) from trailers (PU-798 and PU-799, and rear of AN/MJQ-37 and AN/MJQ-38 only.)

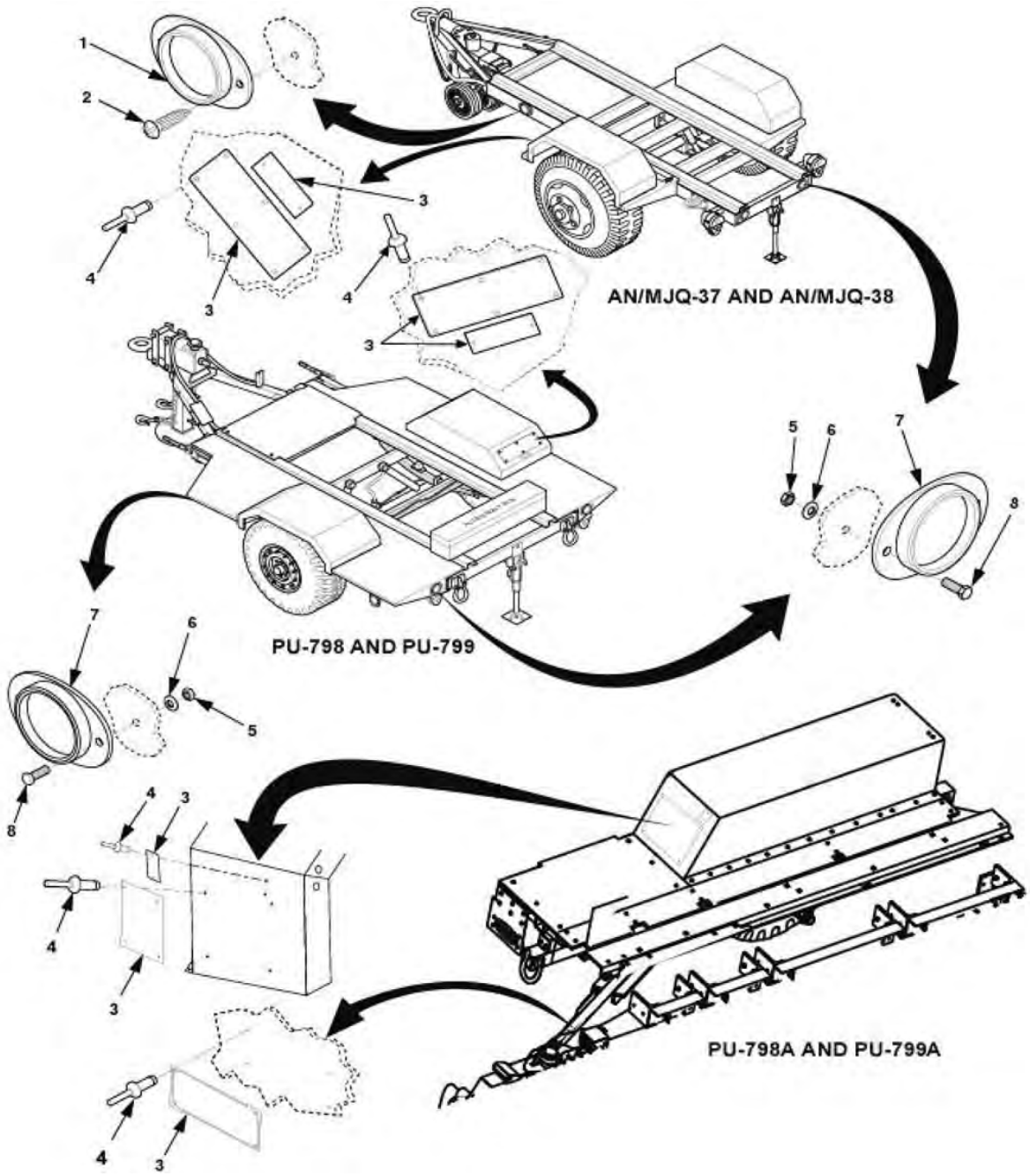

Figure 1. Identification/Transport on Data Plate and Reflector Replacement.

b. Remove self-tapping screws (2) and reflector (1) from front of trailer (AN/MJQ-37 and AN/MJQ-38 only).

c. Install reflector, (7) screws (8), flat washers (6), and self-locking nuts (5) on trailer.

d. Install reflector (1) and self-tapping screws (2) on front of trailers (AN/MJQ-37 and AN/MJQ-38 only).

END OF TASK

END OF WORK PACKAGE

FIELD MAINTENANCE

10 kW 60 AND 400 Hz TRAILER-MOUNTED POWER UNITS AND POWER PLANTS

AN/MJQ-37, AN/MJQ-38, PU-798, AND PU-799 TRAILER PLATFORM: REMOVAL, INSTALLATION, REPLACEMENT

INITIAL SETUP:

Tools and Special Tools
Tool Kit, General Mechanic's Automotive or Standard Automotive Tool Set (WP 0101, Table 2, Item 9)
¼ Inch Drill (WP 0101, Table 2, Item 5)

Equipment Condition
Trailer handbrakes set, front support leg/landing leg lowered, and rear leveling-support jack lowered; WP 0005, Positioning Power Plant/Power Unit.
Both generator sets shut down; WP 0005, Stopping Generator Set.

Materials/Parts
Nuts, Self-locking
Covering, Deck

WARNING

All metal jewelry can conduct electricity and become entangled in generator set components. Remove all jewelry when working on generator set. Failure to comply with this warning can cause injury or death to personnel.

WARNING

DO NOT wear loose clothing when performing checks, services and maintenance. Failure to comply with this warning can cause injury or death to personnel.

WARNING

Use the aid of an assistant when removing the fender, splash guard, and switch box as an assembly. Failure to comply with this warning can cause severe personal injury.

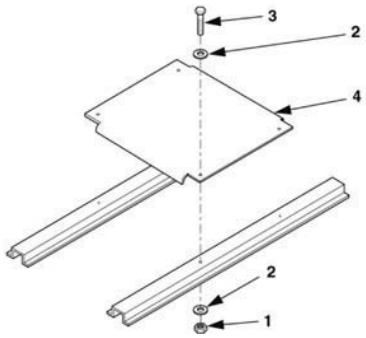

Figure 1. Power Plant/Power Unit Trailer Platform Replacement.

REMOVAL

Remove four self-locking nuts (Figure 1, Item 1) eight flat washers (2), four screws (3), and trailer platform (4).

END OF TASK

INSTALLATION

Install platform (4), four screws (3), eight flat washers (2), and four self-locking washers (1).

END OF TASK

REPLACEMENT

Replace is the same as removal and installation.

END OF TASK

END OF WORK PACKAGE

FIELD MAINTENANCE

10 kW 60 AND 400 Hz TRAILER-MOUNTED POWER UNITS AND POWER PLANTS

PU-789 AND PU-799 FENDER: REMOVAL, INSTALLATION, REPAIR, REPLACEMENT

INITIAL SETUP:

Tools and Special Tools
Tool Kit, General Mechanic's Automotive or Standard Automotive Tool Set (WP 0101, Table 2, Item 9)
¼ Inch Drill (WP 0101, Table 2, Item 5)

References
WP 0028
WP 0030
WP 0061

Personnel Required
Two

Materials/Parts
Nuts, Self-locking
Washer, Lock, Split-ring
Covering, Deck
Flat Washers

Equipment Condition
Trailer handbrakes set, front support leg/landing leg lowered, and rear leveling-support jack lowered; WP 0005, Positioning Power Plant/Power Unit.
Both generator sets shut down; WP 0005, Stopping Generator Set.
Switch box removed (only if roadside fender is being replaced); WP 0019.

WARNING

All metal jewelry can conduct electricity and become entangled in generator set components. Remove all jewelry when working on generator set. Failure to comply with this warning can cause injury or death to personnel.

WARNING

DO NOT wear loose clothing when performing checks, services and maintenance. Failure to comply with this warning can cause injury or death to personnel.

WARNING

Use the aid of an assistant when removing the fender, splash guard, and switch box as an assembly. Failure to comply with this warning can cause severe personal injury.

REMOVAL

1. Remove wing nut (Figure 1, Item 8), two flat washers (9), and nut (10), flat washer (11), ground cable (12), and flat washer (13).

NOTE

If fender is being replaced, fire extinguisher bracket, data plate, ground stud, and reflectors must be removed and retained for installation on new fender. If replacing roadside fender, perform Steps 2, 3, 5, and 6. If replacing curbside fender, perform Steps 4, 5, and 6.

2. Remove two nuts (14), lockwashers (15), internal tooth lockwashers (16), and ground stud (18).
3. Remove fire extinguisher bracket (WP 0028) and reflectors (WP 0030).
4. Remove data plate and reflectors (WP 0030).
5. Remove ten self-locking nuts (5), twenty flat washers (4), and ten cap screws (6).
6. Remove five self-locking nuts (3), ten flat washers (2), five cap screws (1), and fender (7).

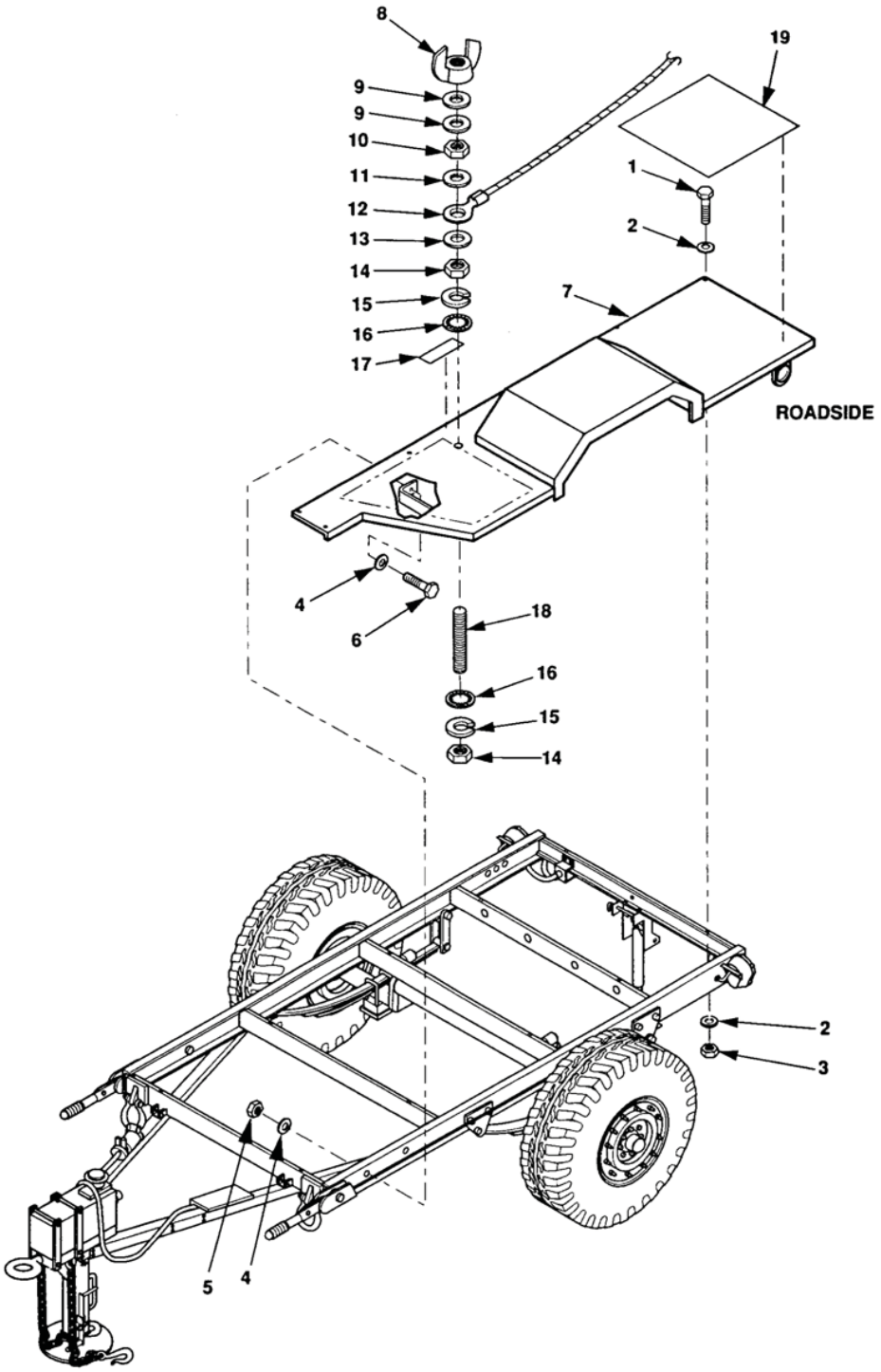

Figure 1. PU-798 and PU-799 Fender Replacement.

END OF TASK

INSTALLATION

1. Position fender (Figure 1, Item 7) on trailer chassis and loosely install five cap screws (1), ten flat washers (2), and five self-locking nuts (3).
2. Install and tighten ten cap screws (6), twenty flat washers (4), and ten self-locking nuts (5).
3. Tighten five self-locking nuts (3).

NOTE

If new fender(s) is/are being installed, fire extinguisher bracket, data plate, ground stud, and reflectors removed during removal procedures must be installed. If replacing roadside fender, perform Steps 4, 5, and 6. If not, proceed to Step 8. If replacing curbside fender, perform Steps 6 and 7.

4. Install fire extinguisher bracket (WP 0028).
5. Install ground stud (18), two internal tooth lockwashers (16), lockwashers (15), nuts (14), and ground data plate (17).
6. Install reflectors (WP 0030).
7. Install data plates (WP 0030).
8. Install flat washer (13), ground wire (12), flat washer (11), nut (10), two flat washers (9), and wing nut (8).

END OF TASK

REPAIR

NOTE

Repair is limited to replacement of deck covering (19). Refer to WP 0061, Figure 1.

END OF TASK

REPLACEMENT

Replace is the same as removal and installation.

END OF TASK

END OF WORK PACKAGE

FIELD MAINTENANCE

10 kW 60 AND 400 Hz TRAILER-MOUNTED POWER UNITS AND POWER PLANTS

AN/MJQ-37 AND AN/MJQ-38 FENDER: REMOVAL, REPAIR, INSTALLATION, REPLACEMENT

INITIAL SETUP:

Tools and Special Tools
Tool Kit, General Mechanic's Automotive or Standard Automotive Tool Set (WP 0101, Table 2, Item 9)
¼ Inch Drill (WP 0101, Table 2, Item 5)

Personnel Required
Two

Equipment Condition
Trailer handbrakes set, front support leg/landing leg lowered, and rear leveling-support jack lowered; WP 0005, Positioning Power Plant/Power Unit.
Switch box removed (only if roadside fender is being replaced); WP 0019.

Materials/Parts
Nuts, Self-locking
Washer, Lock, Split Ring
Covering, Deck

References
WP 0028
WP 0030
WP 0061

WARNING

All metal jewelry can conduct electricity and become entangled in generator set components. Remove all jewelry when working on generator set. Failure to comply with this warning can cause injury or death to personnel.

WARNING

DO NOT wear loose clothing when performing checks, services and maintenance. Failure to comply with this warning can cause injury or death to personnel.

WARNING

Use the aid of an assistant when removing the fender, splash guard, and switch box as an assembly. Failure to comply with this warning can cause severe personal injury.

REMOVAL

1. Remove wing nut (Figure 1, Item 9), two flat washers (10), nut (1), flat washer (12), ground cable (13), and flat washer (14).

NOTE

If fender is being replaced, fire extinguisher bracket and/or ground stud and data plate must be removed and retained for installation on new fender. If replacing roadside fender, perform Steps 2, 3, 4, 5, and 6. If replacing curbside fender, perform Steps 3, 5, and 6.

2. Remove two nuts (15), lockwashers (16), internal tooth lockwashers (17), and ground stud (19).
3. Remove fire extinguisher bracket (WP 0028).
4. Remove data plate (WP 0030).
5. Remove four self-locking nuts (1), eight flat washers (2), and four cap screws (3).
6. Remove five self-locking nuts (4), ten flat washers (5), five cap screws (6), and fender (7).

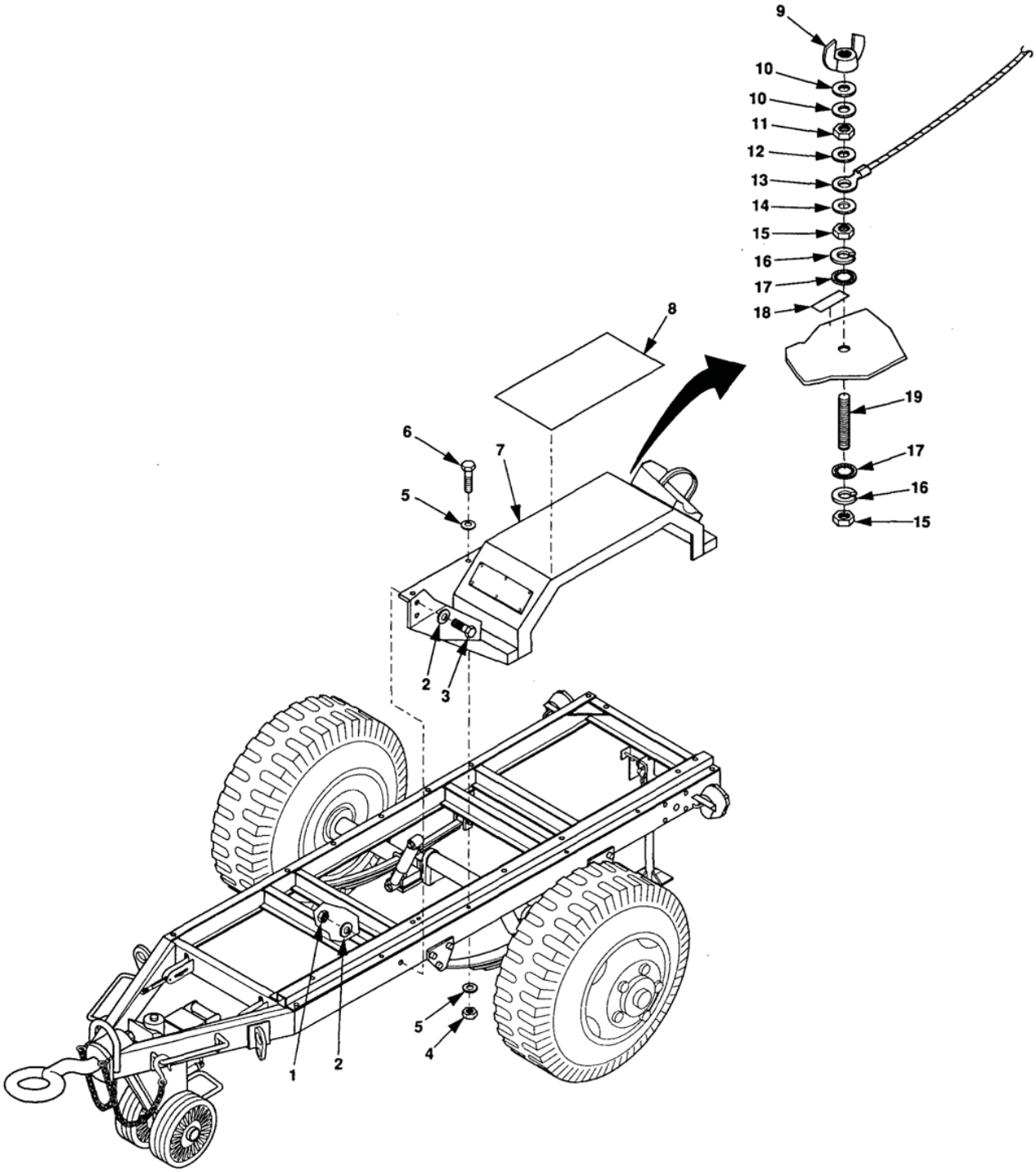

Figure 1. AN/MJQ-37 and AN/MJQ-38 Fender Replacement.

END OF TASK

REPAIR

NOTE

Repair is limited to replacement of non-skid material (8). Refer to WP 0061, Figure 1.

END OF TASK

INSTALLATION

1. Loosely install fender (7), five screws (6), ten flat washers (5), and five self-locking nuts (4).
2. Install and tighten four cap screws (3), eight flat washers (2), and four self-locking nuts (1).
3. Tighten five self-locking nuts (4).

NOTE

If replacing fender(s), fire extinguisher bracket, and/or data plate, and ground stud removed during removal procedures must be reinstalled. If replacing roadside fender, perform Steps 4, 5, 6, and 7. If replacing curbside fender, perform Step 4.

4. Instill fire extinguisher bracket (WP 0028).
5. Install data plate (WP 0030).
6. Install ground stud (19), two internal tooth lockwashers (17), lockwashers (16), nuts (15), and ground data plate (18).
7. Install flat washer (14), ground wire (13), flat washer (12), nut (11), two flat washers (10), and wing nut (9).

END OF TASK

REPLACEMENT

Replace is the same as removal and installation.

END OF TASK

END OF WORK PACKAGE

FIELD MAINTENANCE

10 kW 60 AND 400 Hz TRAILER-MOUNTED POWER UNITS AND POWER PLANTS

1 TON TRAILER REAR LEVELING-SUPPORT JACK: INSPECTION, SERVICING, REMOVAL, REPAIR, INSTALLATION

INITIAL SETUP:

Tools and Special Tools
Tool Kit, General Mechanic's Automotive or Standard Automotive Tool Set (WP 0101, Table 2, Item 9)
Jack Stand (WP 0101, Table 2, Item 5)
Vice (WP 0101, Table 2, Item 5)

References
Operator Lubrication Instructions (WP 0010)

Materials/Parts
Pin, Cotter
Nut, Self-locking, General Purpose
Pin, Spring
Fitting, Lubrication (if needed)
Grease, GAA (WP 0104, Table 1, Item 4)

Equipment Condition
Trailer handbrakes set and front support leg/landing leg lowered; WP 0005, Positioning Power Plant/Power Unit.
Both generator sets shut down; WP 0005, Stopping Generator Set.

INSPECTION

Inspect for operability, corrosion and visible damage.

END OF TASK

SERVICING

Refer to WP 0010 for lubrication.

END OF TASK

REMOVAL

WARNING

Before removing trailer leveling-support jack, support rear of trailer with jack stand(s). Failure to comply with this warning can cause severe personal injury or death.

1. Support rear of trailer with jack stands.
2. Turn leg base (Figure 1, Item 11) to take weight off leg prop.
3. Remove either one of two cotter pins (16 or 6) from pivot shaft (15) and discard.
4. Hold leg base (11) steady and remove pivot shaft (15) with remaining cotter pin (16 or 6) in place.
5. Lift leg base (11) slightly to take weight off retaining pin (10) and remove retaining pin (10). Move leg base (11) and attached parts out of bracket (7).
6. Remove two self-locking nuts (4), four flat washers (5 and 8), and two cap screws (9).
7. Remove self-locking nut (3), two flat washers (2 and 14), and cap screw (13). Remove bracket (7) from trailer chassis (1).

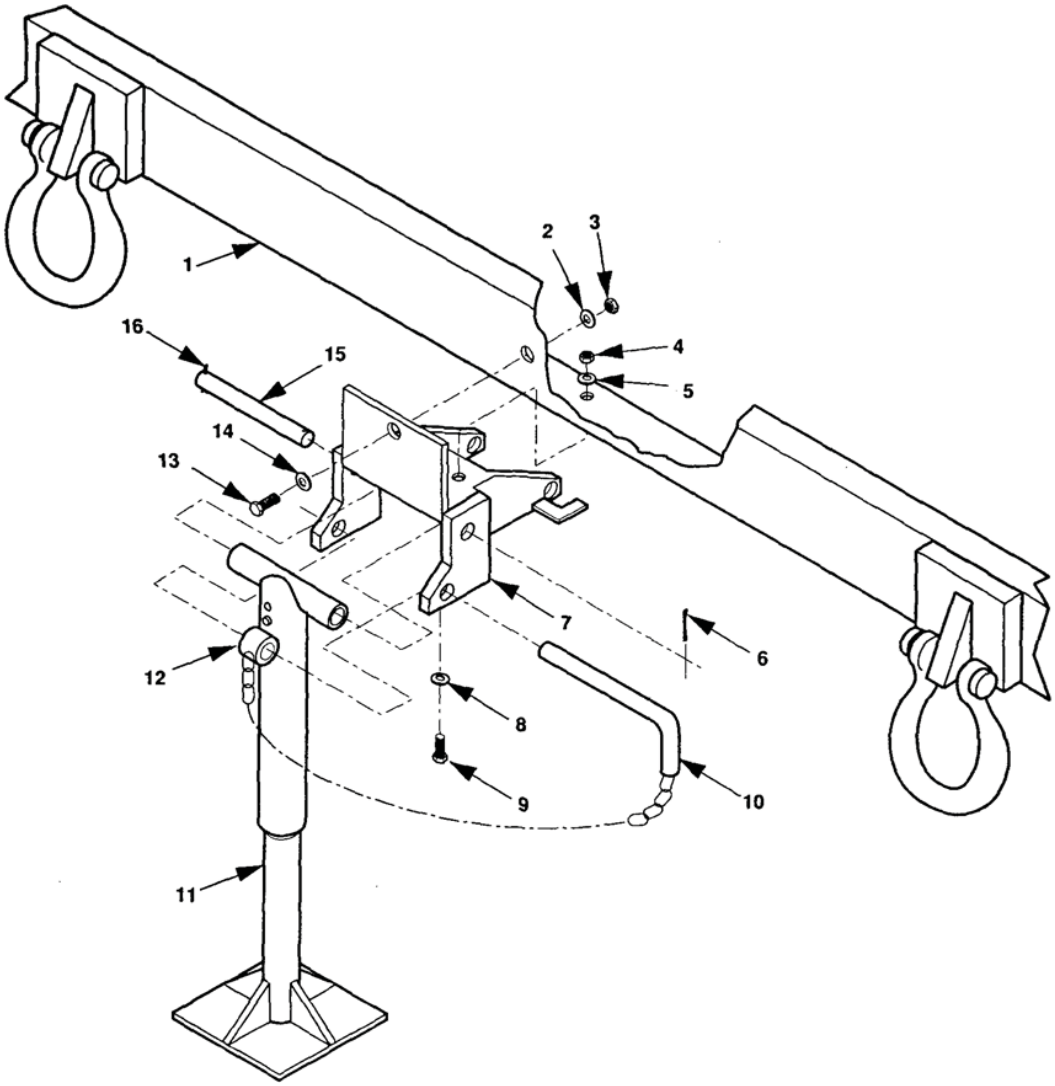

Figure 1. Rear Leveling-Support Jack Replacement; 1 Ton Trailer.

END OF TASK

REPAIR

WARNING

Before removing trailer leveling-support jack, support rear of trailer with jack stand(s). Failure to comply with this warning can cause severe personal injury or death.

NOTE

Disassemble the trailer rear leveling-support jack only to the extent necessary to replace worn, defective, or damaged parts.

1. Disassemble trailer rear leveling-support jack.
   a. Clamp leg assembly in a vise with spring pin (Figure 2, Item 2) facing up.
   b. Drive the spring pin (2) out of upper leg (1) and remove leg base (4).

c. If defective, remove lubrication fitting (3).

d. Inspect upper leg (1) and leg base (4) for damage. If either needs to be replaced, replace entire trailer rear leveling-support jack.

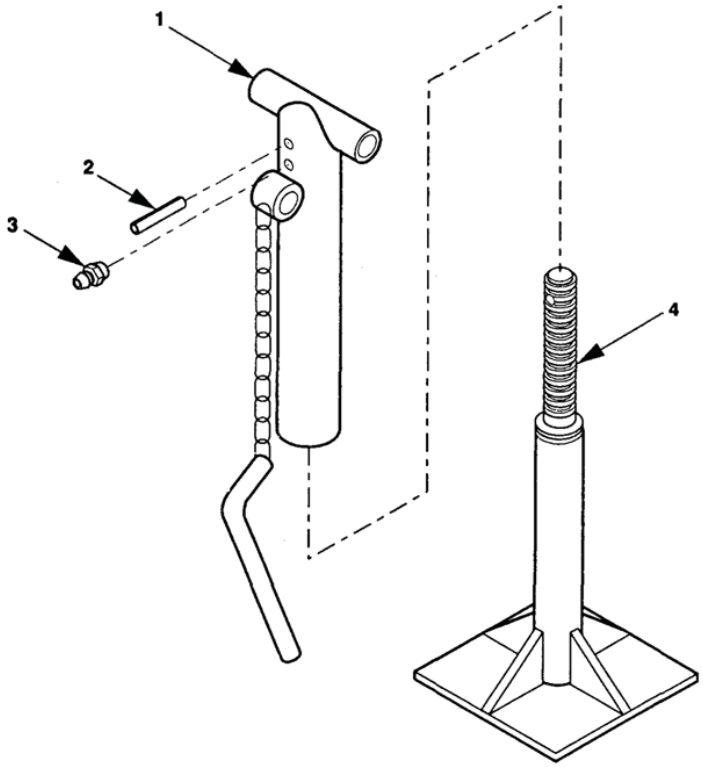

Figure 2. Rear Leveling-Support Jack Repair; 1 Ton Trailer.

2. Assemble trailer rear leveling-support jack.
   a. If removed in disassembly, install lubrication fitting (3).
   b. Clamp upper leg (1) in a vise with spring pin hole facing up.
   c. Insert leg base (4), align hole and install a new spring pin (2).

END OF TASK

INSTALLATION

WARNING

Before removing trailer leveling-support jack, support rear of trailer with jack stand(s). Failure to comply with this warning can cause severe personal injury or death.

1. Install bracket (Figure 1, Item 7) on trailer chassis (1), with flat washer (14) and cap screw (13), through mounting hole in bracket (7) on trailer chassis (1).
2. Install flat washer (2) and a new self-locking nut (3) on cap screw (13).
3. Install cap screws (9), flat washers (8 and 5), and new self-locking nuts (4).
4. Position leg base (11) and attached parts in bracket (7) and install retaining pin (10).
5. Position leg base (11) and install pivot shaft (15).
6. Install new cotter pin (16 or 6) in pivot shaft (15).

7. Lube rear leveling-support jack (WP 0010).

END OF TASK

END OF WORK PACKAGE

FIELD MAINTENANCE

10 kW 60 AND 400 Hz TRAILER-MOUNTED POWER UNITS AND POWER PLANTS

GROUND STUD REPLACEMENT: REMOVAL, INSTALLATION

INITIAL SETUP:

Tools and Special Tools
Tool Kit, General Mechanic's Automotive or Standard Automotive Tool Set (WP 0101, Table 2, Item 9)

References
WP 0005
WP 0018
TM 9-6115-642-10

Materials/Parts
Washer, Lock (WP 0105, Table 1, Item 10)

Equipment Condition
Trailer handbrakes set and front support leg/landing leg lowered; WP 0005, Positioning Power Plant/Power Unit.
Both generator sets shut down; WP 0005, Stopping Generator Set.

WARNING

All metal jewelry can conduct electricity and become entangled in generator set components. Remove all jewelry when working on generator set. Failure to comply with this warning can cause injury or death to personnel.

WARNING

DO NOT wear loose clothing when performing checks, services and maintenance. Failure to comply with this warning can cause injury or death to personnel.

WARNING

High voltage is produced when this generator set is in operation. Make sure unit or units are completely shut down and free of any power source before attempting any repair or maintenance on the unit, switch box or when connecting or disconnecting load cables. Failure to comply with this warning can cause injury or death to personnel.

REMOVAL

NOTE

WP 0005, Figure 3 contains location of ground stud.

1. Loosen nut (Figure 1, Item 1) and remove ground wire (2) from ground stud (3).
2. Remove nut (4), lockwasher (5), flat washer (6), and ground stud (3).

END OF TASK

INSTALLATION

1. Install ground stud (3), flat washer (6), lockwasher (5), and nut (4). Tighten nut (4).
2. Install ground wire (2) in slot of ground stud (3) and tighten nut (1).

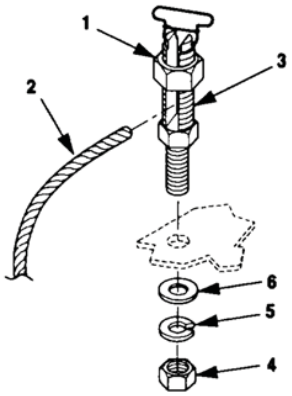

Figure 1. Ground Stud Replacement.

END OF TASK

END OF WORK PACKAGE

FIELD MAINTENANCE

10 kW 60 AND 400 Hz TRAILER-MOUNTED POWER UNITS AND POWER PLANTS

GENERATOR SET: REMOVAL, INSTALLATION, REPLACEMENT

INITIAL SETUP:

Tools and Special Tools
Tool Kit, General Mechanic's Automotive or Standard Automotive Tool Set (WP 0101, Table 2, Item 9)
Torque Wrench, 0-150 ft•lb (WP 0101, Table 2, Item 6)
Lifting Device, 2500 lbs. lifting capacity (WP 0101, Table 2, Item 6)

Materials/Parts
Nuts, Self-locking
Washers, Lock (WP 0105, Table 1, Item 9)

Equipment Condition
Both generator sets shut down; WP 0005, Stopping Generator Set.
Trailer handbrakes set, front support leg/landing leg lowered, and rear leveling-support jack lowered; WP 0005, Positioning Power Plant/Power Unit.
Power cable leads (AN/MJQ-37 and AN/MJQ- 38) or load cable leads (PU-798, PU-799, PU-798A, PU-799A) and ground cable disconnected from generator set load terminals; WP 0018 and TM 9-6115-642-10.
External fuel source disconnected; WP 0005, Disconnect External Fuel Source.

Personnel Required
Two

WARNING

All metal jewelry can conduct electricity and become entangled in generator set components. Remove all jewelry when working on generator set. Failure to comply with this warning can cause injury or death to personnel.

WARNING

DO NOT wear loose clothing when performing checks, services and maintenance. Failure to comply with this warning can cause injury or death to personnel.

WARNING

High voltage is produced when this generator set is in operation. Make sure unit or units are completely shut down and free of any power source before attempting any repair or maintenance on the unit, switch box or when connecting or disconnecting load cables. Failure to comply with this warning can cause injury or death to personnel.

WARNING

When lifting generator set, use lifting equipment with minimum lifting capacity of 2500 pounds (1134.0 kg). Do not stand or put arms, legs, or any part of body under hoisted load. Do not permit generator set to swing. Failure to observe this WARNING can result in severe personal injury or death to personnel or damage to equipment.

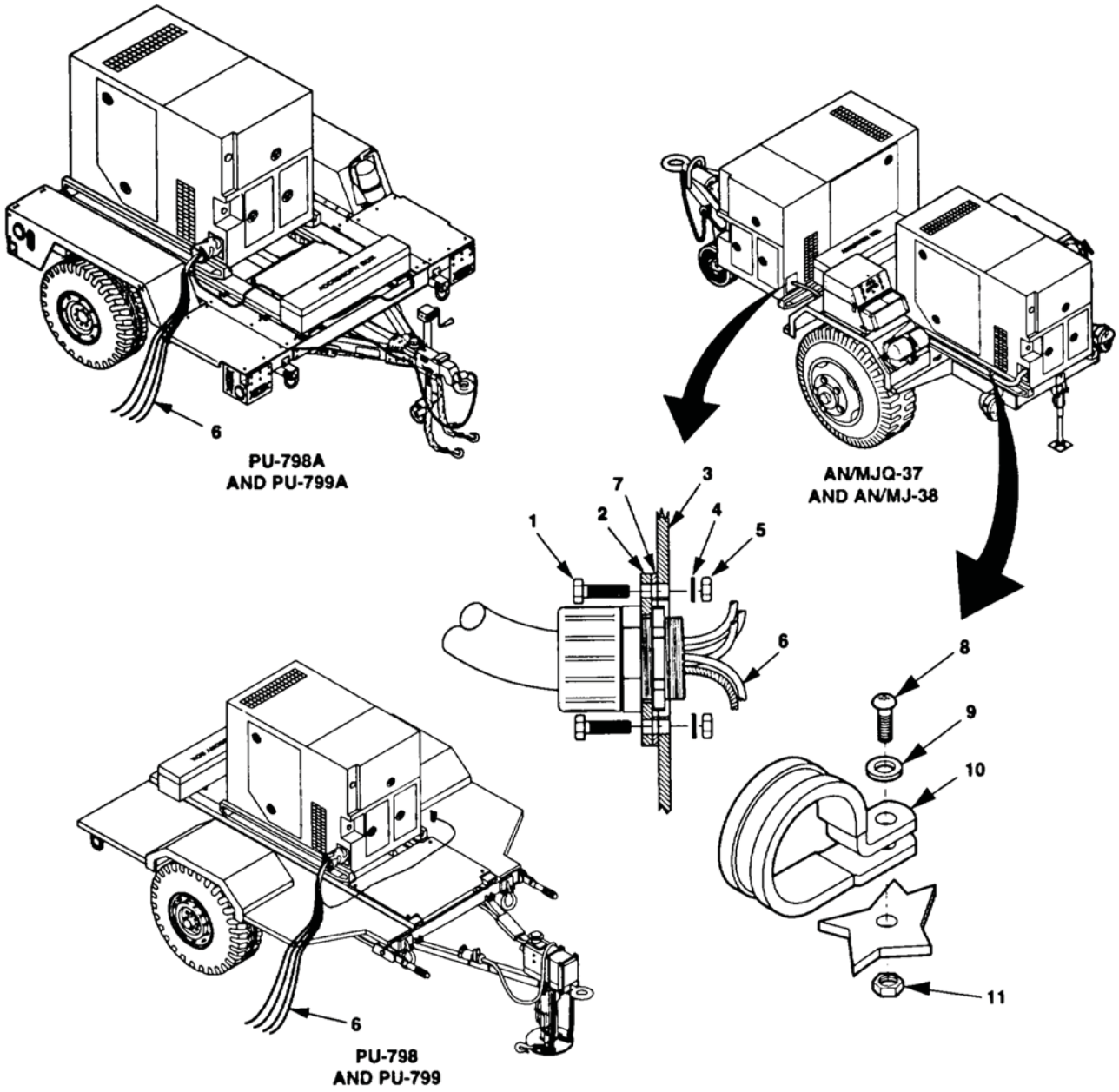

Figure 1. Power/Load Cable Removal.

REMOVAL

1. Remove four nuts (Figure 1, Item 5), lockwashers (4) and cap screws (1) from generator output plate (2).
2. For AN/MJQ-37 and AN/MJQ-38, carefully pull generator output plate (2) away from generator set housing (3). For Power Plants and Power Units, pull until power cable leads and ground cable (6) are free of generator set housing (3). Remove and retain gasket (7).

NOTE

Steps 3 through 6 must be performed if removing AN/MJQ-37 or AN/MJQ-38 front generator set.

3. Remove self-locking nuts (Figure 2, Item 1), flat washers (2), lockwashers (4), and cap screws (3).
4. Attach a four-leg sling to the four lifting/tie-down rings at the corners of the generator set skid base. The sling must meet the dimension requirements shown on the generator set lifting and tie-down diagram plate.

WARNING

When lifting generator set, use lifting equipment with minimum lifting capacity of 2500 pounds (1134.0 kg). Do not stand or put arms, legs, or any part of body under hoisted load. Do not permit generator set to swing. Failure to observe this WARNING can result in severe personal injury or death to personnel or damage to equipment.

5. Using a wrecker, crane, or other lifting device having a lifting capacity of at least 2500 lb (1134.0 kg) and sufficient lifting height, lift generator set from trailer (6).

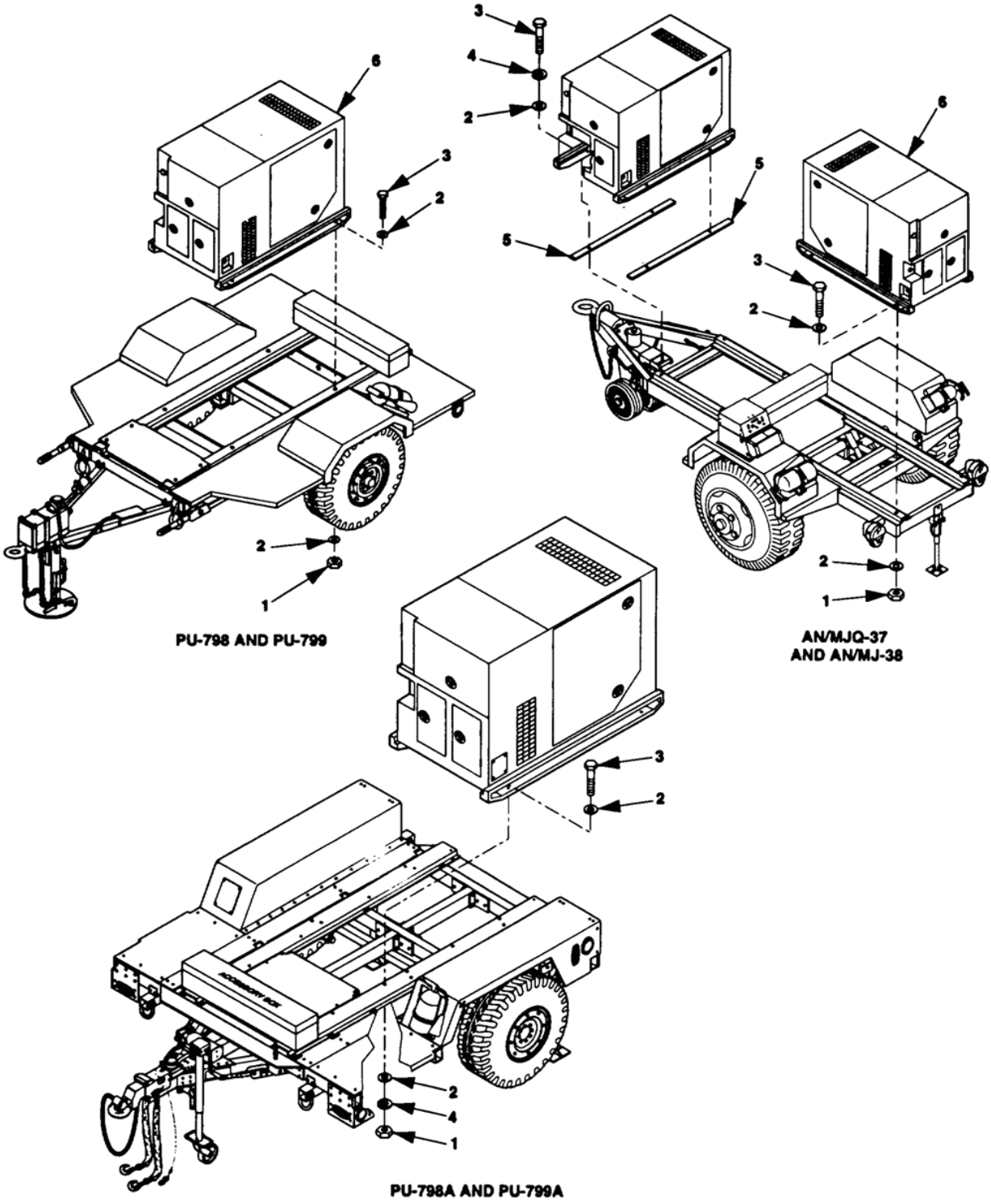

Figure 2. Removing Generator Set Mounting Hardware.

END OF TASK

INSTALLATION

1. Using the same sling as in removal Step 4, attach sling to generator set lifting/tie-down rings.
2. Using the same lifting device as in removal Step 5, lift generator set (6) and position it on trailer.

NOTE

The location of hardware holding generator sets on trailers differs between configurations. When installing generator sets, refer to Figure 2 to determine hardware location. Position lockwashers as noted in disassembly.

3. Install self-locking nuts (Figure 2, Item 1), flat washers (2), lockwashers (4), and cap screws (3). Torque to 80-88 ft•lb (108.5-119.3 N•m).
4. Install cable clamps (Figure 1, Item 10), screws (8), flat washers (9), and self-locking nuts (11).
5. Insert power cable electrical leads and ground cable through generator set access opening from which generator output plate was removed in removal Step 1.
6. Position generator output plate (Figure 1, Item 2, AN/MJQ-37 and AN/MJQ-38 only) with gasket (7) against generator set housing (3). Secure with four cap screws (1), lockwashers (4), and nuts (5).
7. Refer to TM 9-6115-642-10 and connect power cable ends (6) to generator set load terminals as follows:
   a. Lead marked L1 to L1
   b. Lead marked L2 to L2
   c. Lead marked L3 to L3
   d. Lead marked L0 to L0
   e. Ground cable to GND terminal

END OF TASK

REPLACEMENT

Replace procedure is the same as removal and installation Procedure.

NOTE

Maintenance of switch box assembly consists of testing, removal, and installation of switch box wiring and other switch box components. Figure 3 and Figure 4, Switch Box Components, are provided as an aid in performing the following maintenance procedures.

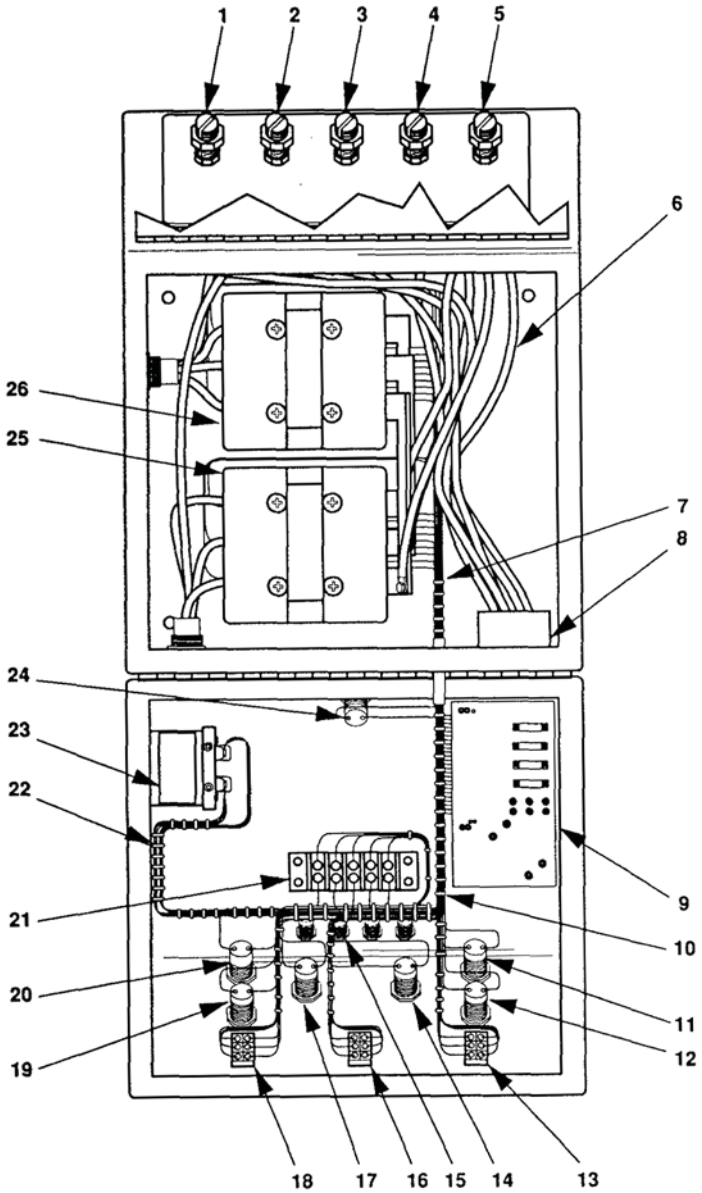

LEGEND

1	GND TERMINAL
2	TERMINAL N
3	TERMINAL L3
4	TERMINAL L2
5	TERMINAL L1
6	PART OF OUTPUT CONN HARNESS W10
7	SW BOX HARNESS W9
8	OUTPUT CONN
9	RELAY BOARD ASSY
10	SEE 7
11	IND LIGHT HSG XDS2
12	IND LIGHT HSG XDS4
13	SWITCH S2
14	IND LIGHT HSG XDS6
15	HOUSING FOR SPARE LAMP (ONE OF FOUR)
16	SWITCH S10
17	IND LIGHT HSG XDS5
18	SWITCH S1
19	IND LIGHT HSG XDS3
20	IND LIGHT HSG XDS1
21	TERMINAL BOARD TB2
22	SEE 7
23	RELAY PP
24	IND LIGHT HSG XDS7
25	CONTACTOR K1
26	CONTACTOR K2

Figure 3. Switch Box Components (OLD).

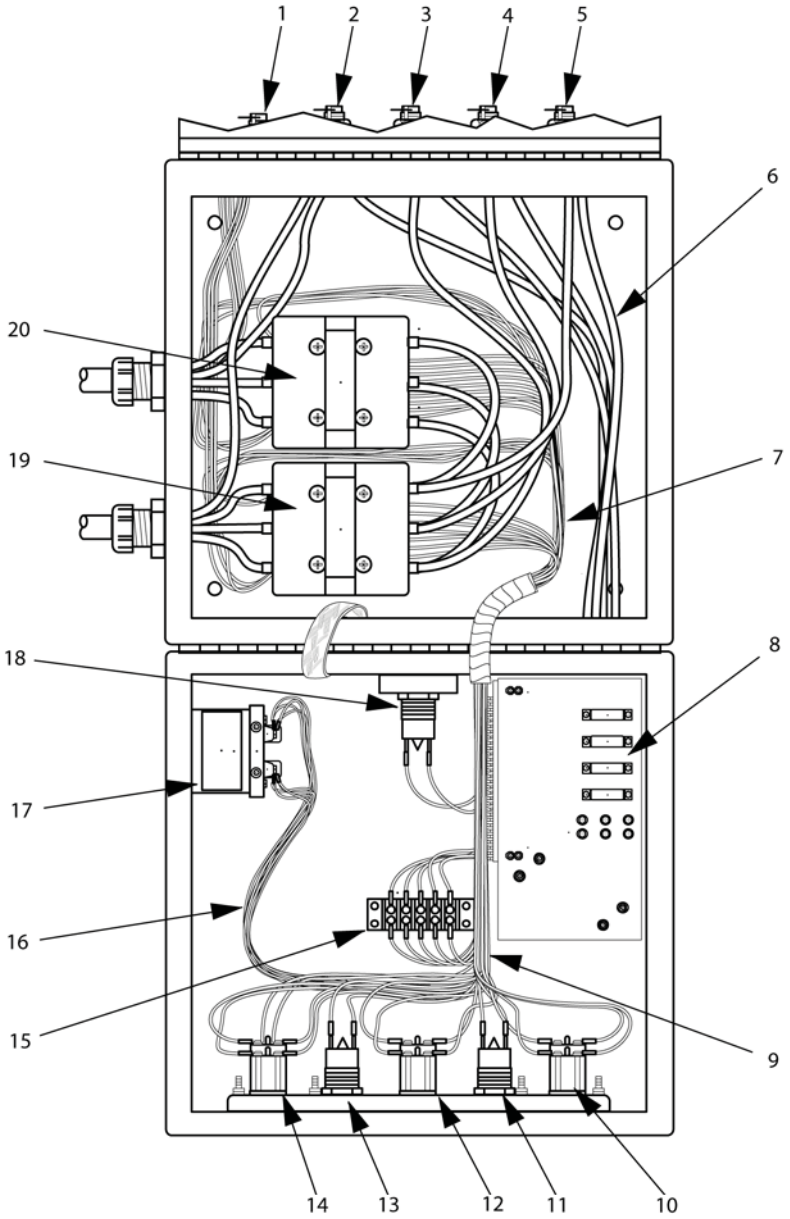

LEGEND

1	GND TERMINAL	11	IND LIGHT HSG XDS2
2	TERMINAL N	12	SWITCH S10
3	TERMINAL L3	13	IND LIGHT HSG XDS5
4	TERMINAL L2	14	SWITCH S1
5	TERMINAL L1	15	TERMINAL BOARD TB
6	PART OF OUTPUT CONN HARNESS W10	16	SEE 7
7	SW BOX HARNESS W9	17	RELAY PP
8	RELAY BOARD ASSY	18	IND LIGHT HSG XDS7
9	SEE 7	19	CONTACTOR K1
10	SWITCH S2	20	CONTACTOR K2

Figure 4. Switch Box Components (NEW).

END OF TASK

END OF WORK PACKAGE

FIELD MAINTENANCE

10 kW 60 AND 400 Hz TRAILER-MOUNTED POWER UNITS AND POWER PLANTS

ELECTRICAL LEADS W3 - W8: TESTING, REMOVAL, REPAIR, INSTALLATION, REPLACEMENT

INITIAL SETUP:

Tools and Special Tools
Tool Kit, General Mechanic's Automotive or Standard Automotive Tool Set (WP 0101, Table 2, Item 9)
Multimeter (WP 0101, Table 2, Item 2)
Crimping Tool, Hydraulic (WP 0101, Table 2, Item 1)

Materials/Parts
Lockwashers

Equipment Condition
Both generator sets shut down; WP 0005, Stopping Generator Set.
Trailer handbrakes set, front support leg/landing leg lowered, and rear leveling support jack lowered; WP 0005, Positioning Power Plant/Power Unit.
Switch box cover open.

References
WP 0056, Figure 1 (Electrical Leads W3-W8)
FO-1 Wiring Diagram, Table 1

NOTE

Refer to FO-1 for wiring diagram.

NOTE

The following warnings apply to all maintenance tasks in this work package.

WARNING

All metal jewelry can conduct electricity and become entangled in generator set components. Remove all jewelry when working on generator set. Failure to comply with this warning can cause injury or death to personnel.

WARNING

DO NOT wear loose clothing when performing checks, services and maintenance. Failure to comply with this warning can cause injury or death to personnel.

WARNING

High voltage is produced when this generator set is in operation. Make sure unit or units are completely shut down and free of any power source before attempting any repair or maintenance on the unit, switch box or when connecting or disconnecting load cables. Failure to comply with this warning can cause injury or death to personnel.

WARNING

When lifting generator set, use lifting equipment with minimum lifting capacity of 2500 pounds (1134.0 kg). Do not stand or put arms, legs, or any part of body under hoisted load. Do not permit generator set to swing. Failure to observe this WARNING can result in severe personal injury or death to personnel or damage to equipment.

TESTING

1. Check continuity of lead W3 between contactor terminal K1-A1 and switch box load terminal L1.
2. Check continuity of lead W4 between contactor terminal K1-B1 and switch box load terminal L2.
3. Check continuity of lead W5 between contactor terminal K1-C1 and switch box load terminal L3.
4. Check continuity of lead W6 between contactor terminals K1-A1 and K2-A1.
5. Check continuity of lead W7 between contactor terminals K1-B1 and K2-B1.

6. Check continuity of lead W8 between contactor terminals K1-C1 and K2-C1.
7. Repair or replace any lead that does not have continuity (WP 0056, Figure 1).

END OF TASK

REMOVAL

NOTE

Figure 1, Detail A, shows connections at K1 or K2. Detail B shows connections at switch box load terminals.

1. Locate W3-W8 connections to terminals A1, B1, and C1 of contactors (Figure 1, Detail A, Item 13) and remove four screws (5), lockwashers (6), and contactor shield (7).
2. Remove nuts (8), lockwashers (9), flat washers (10), and leads (11 and 12).
3. Locate W3-W5 connections to switch box load terminals L1, L2, and L3 (Detail B, Item 4).
4. Remove nuts (1), internal tooth washers (2), and leads (3) from load terminal (4).

END OF TASK

REPAIR

Refer to WP 0056, Figure 1.

END OF TASK

INSTALLATION

1. Install leads W3, W4, and W5 (3), internal tooth washers (2), and nuts (1) on switch box load terminals and tighten.
2. Install other end of leads W3-W6 (11 and 12), flat washers (10), lockwashers (9), and nuts (8) on contactors (13).
3. Install contactor shield (7), lockwasher (6), and screw (5).

END OF TASK

REPLACEMENT

Replace is the same as removal and installation.

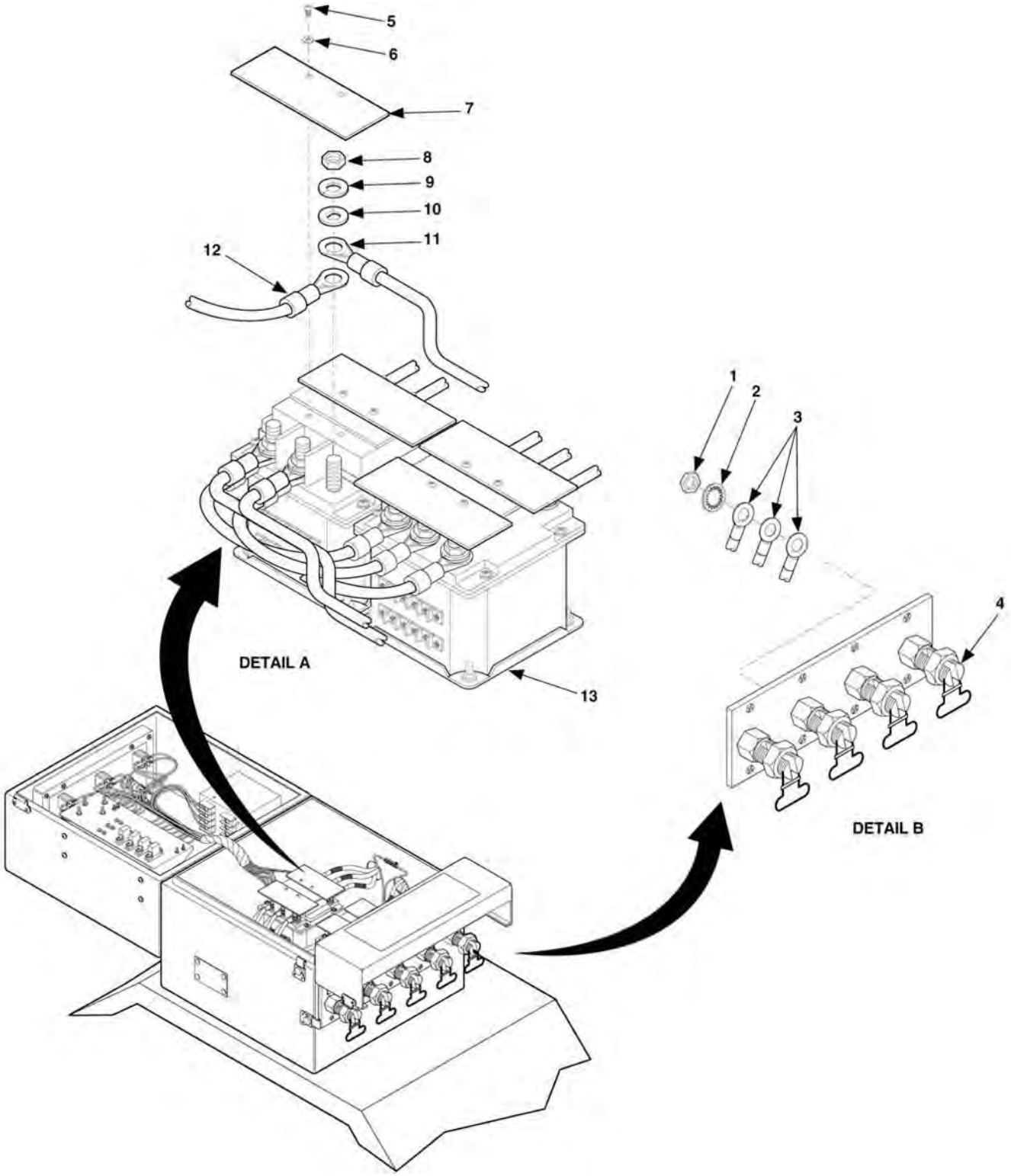

Figure 1. Switch Box Lead Connections.

END OF TASK

END OF WORK PACKAGE

FIELD MAINTENANCE

10 kW 60 AND 400 Hz TRAILER-MOUNTED POWER UNITS AND POWER PLANTS

SWITCH BOX HARNESS W9: TESTING, REMOVAL, REPAIR, INSTALLATION, REPLACEMENT

INITIAL SETUP:

Tools and Special Tools
Tool Kit, General Mechanic's Automotive or Standard Automotive Tool Set (WP 0101, Table 2, Item 9)
Solder Gun (WP 0101, Table 2, Item 6)
Crimping Tool, Hand (WP 0101, Table 2, Item 6)
Multimeter (WP 0101, Table 2, Item 6)

Materials/Parts
Lockwashers
Solder
Insulation sleeving

References
Generator Set (WP 0036, Figure 3 and 4)
Switch Box harness assembly (WP 0058, Figure 1, Sheet 1 and 2)
Wiring diagram (FO-1)

Equipment Condition
Both generator sets shut down; WP 0005, Stopping Generator Set.
Trailer handbrakes set, front support leg/landing leg lowered, and rear leveling-support jack lowered; WP 0005, Positioning Power Plant/Power Unit.
Switch box cover open.

NOTE

The following warnings apply to all maintenance tasks in this work package.

WARNING

All metal jewelry can conduct electricity and become entangled in generator set components. Remove all jewelry when working on generator set. Failure to comply with this warning can cause injury or death to personnel.

WARNING

DO NOT wear loose clothing when performing checks, services and maintenance. Failure to comply with this warning can cause injury or death to personnel.

WARNING

High voltage is produced when this generator set is in operation. Make sure unit or units are completely shut down and free of any power source before attempting any repair or maintenance on the unit, switch box or when connecting or disconnecting load cables. Failure to comply with this warning can cause injury or death to personnel.

WARNING

When lifting generator set, use lifting equipment with minimum lifting capacity of 2500 pounds (1134.0 kg). Do not stand or put arms, legs, or any part of body under hoisted load. Do not permit generator set to swing. Failure to observe this WARNING can result in severe personal injury or death to personnel or damage to equipment.

TESTING

1. Remove four screws (Figure 1, Item 2), lockwashers (3), and flat washers (4), and invert relay board assembly (1).

NOTE

Disconnect wire being checked at one end to isolate wire for continuity check.

NOTE

Refer to FO-1 for wiring diagram.

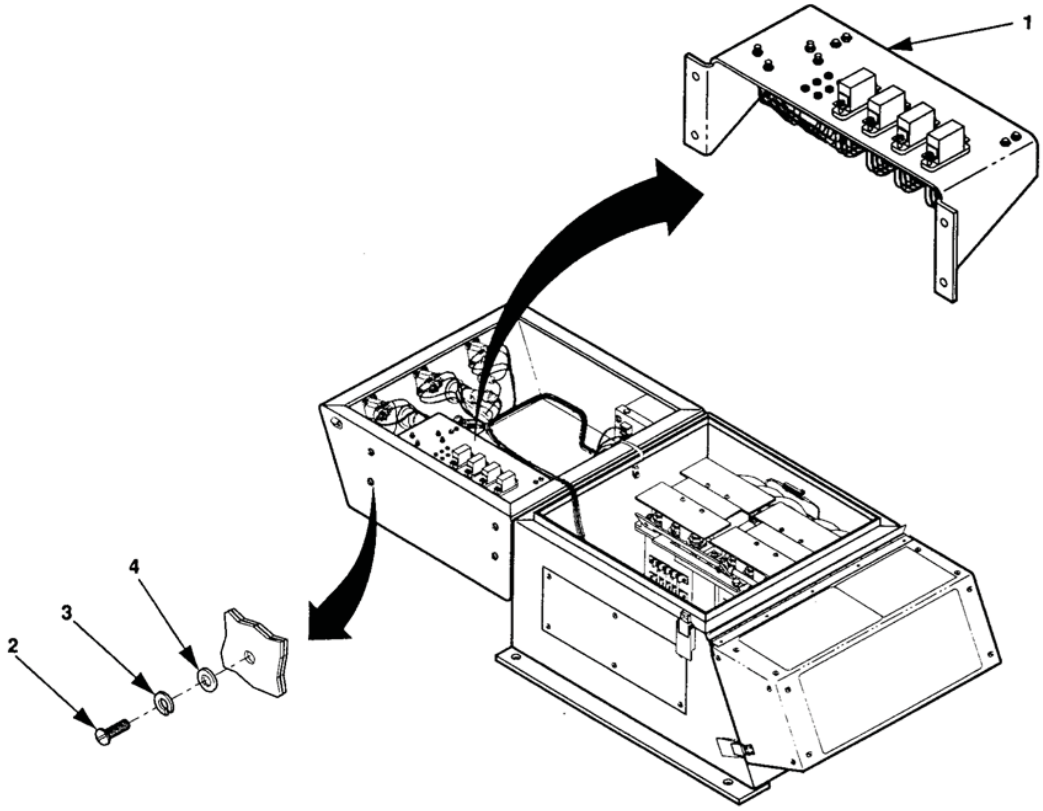

Figure 1. Switch Box Relay Board Assembly (Old Configuration).

Table 1. Switch Box Harness Wire List.

WIRE NO.	FROM	TO
W9-1	TB1-17	S10-2
W9-2	TB1-2	PP-4
W9-3	TB1-3	PP-3
W9-4	TB1-4	K2-A2
W9-5	TB1-5	XDS6-2
W9-6	TB1-6	K2-22
W9-7	TB1-7	K1-A2
W9-8	TB1-8	K1-21
W9-9	TB1-9	K1-C2
W9-10	TB1-10	K2-11
W9-11	TB1-10	PP-6
W9-12	TB1-11	PP-8
W9-13	TB1-12	K2-21
W9-14	TB1-13	K1-22
W9-15	TB1-16	S10-5
W9-16	------	------
W9-17	TB2-5	K2-C2
W9-18	------	------
W9-19	TB2-4	K2-Y
W9-20	XDS6-1	R3-1
W9-21	XDS5-2	PP-2
W9-22	XDS5-1	PP-1
W9-23	TB2-2	K1-C2
W9-24	------	------
W9-25	S2-2	S10-4
W9-26	------	------

WIRE NO.	FROM	TO
W9-28	S1-6	PP-7
W9-29	S1-2	S10-1
W9-30	S1-5	K1-12
W9-31	S2-6	PP-5
W9-32	------	------
W9-33	S2-5	K2-12
W9-34	K1-11	PP-8
W9-35	PP-4	L0
W9-36	XDS7-2	PP-1
W9-37	XDS7-1	L3
W9-38	K1-22	K2-32
W9-39	K2-32	K1-C2
W9-40	K2-22	K2-C2
W9-41	K1-32	K2-C2
W9-42	K1-33	K2-11
W9-43	K2-Y	L0
W9-44	K2-X	S2-3
W9-45	K2-33	K1-11
W9-46	K1-X	S1-3
W9-47	K1-Y	L0
W9-48	K1-Y	TB2-1
W9-49	K2-A1	R3-2
W9-50	PP-2	PP-3
W9-51	TB1-18	TB2-3
W9-52	TB2-3	Ground

2. Measure continuity of switch box harness W9 as listed in Table 1. Refer to WP 0036, Figure 3 and wiring diagram (FO-1).
3. If any wire fails continuity check, repair or replace switch box harness.
4. If all wires pass continuity check, install relay board assembly (1), four flat washers (4), screws (7), lockwashers (3), and screws (2).

END OF TASK

REMOVAL

NOTE

Other leads removed during removal of W9 harness leads must be replaced with any attaching hardware.

1. Remove two screws (Figure 2, Item 1), lockwashers (2), and contactor shields (3) that cover contactor terminals A2, B2, and C2 of contactor K1 and K2, and terminal A1 of contactor K2.
2. Refer to Table 1 and wiring diagram (FO-1), tag leads, and remove nut (4), lockwasher (5), and flat washer (6) from contactor terminals (9) and remove W9 leads.
3. Tag and remove leads (12) from terminals (13) by removing screws (11).

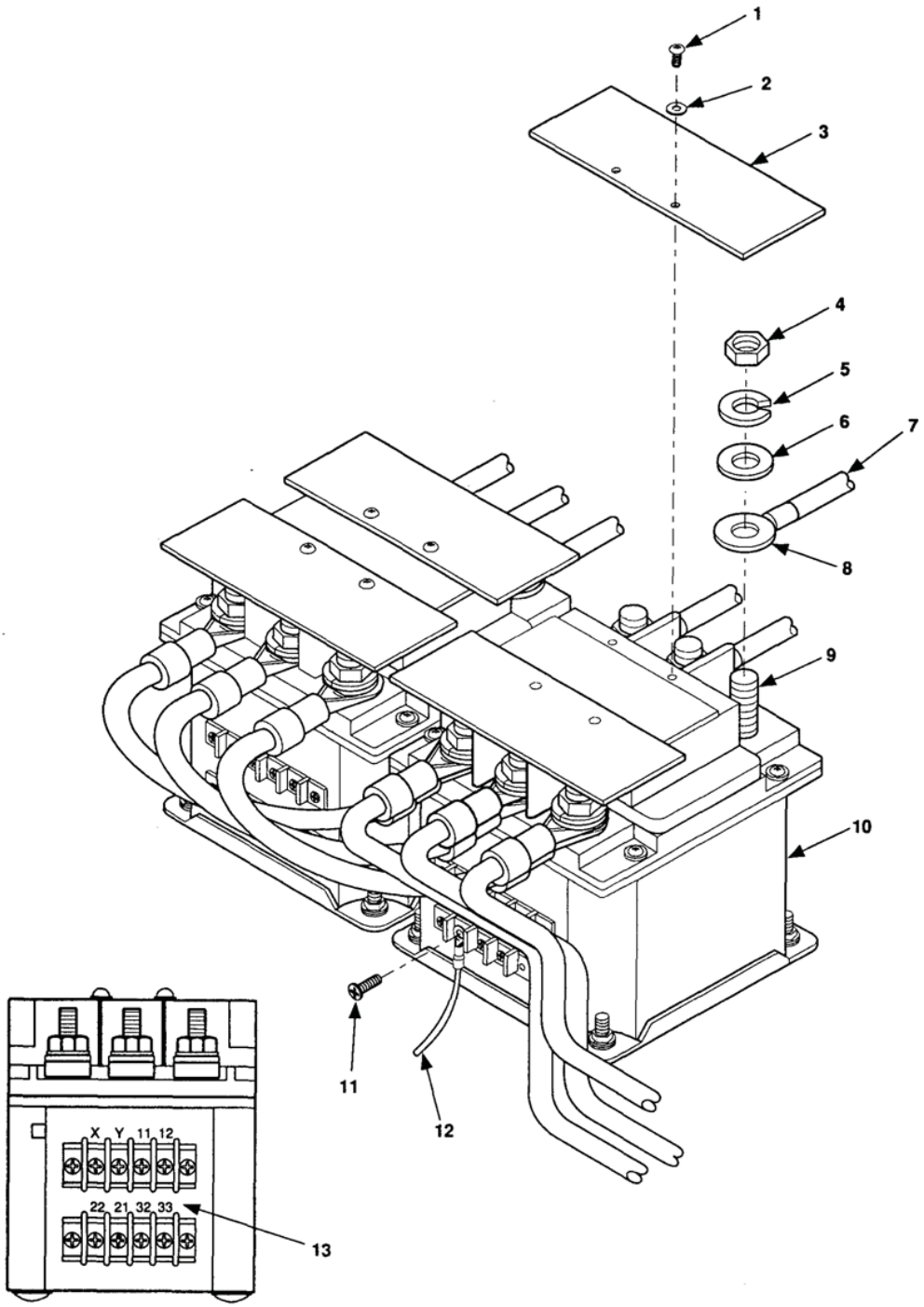

Figure 2. Disconnect Switch Box Harness W9 From Contactor.

4. Remove insulation from W9-20 and W9-49 connections to resistor R3 and unsolder harness leads.
5. Remove nut (Figure 3, Item 1), internal tooth washer (2), and W9 harness lead (3) from load terminals L0 and L3 (4).

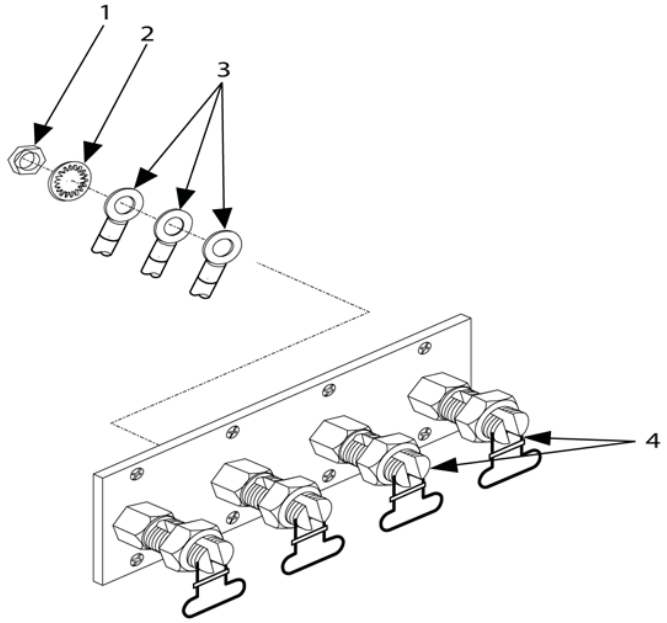

Figure 3. Switch Box Load Terminals.

6. Remove four screws (Figure 4, Item 1), lockwashers (2), and flat washers (3), and invert relay board assembly (4).

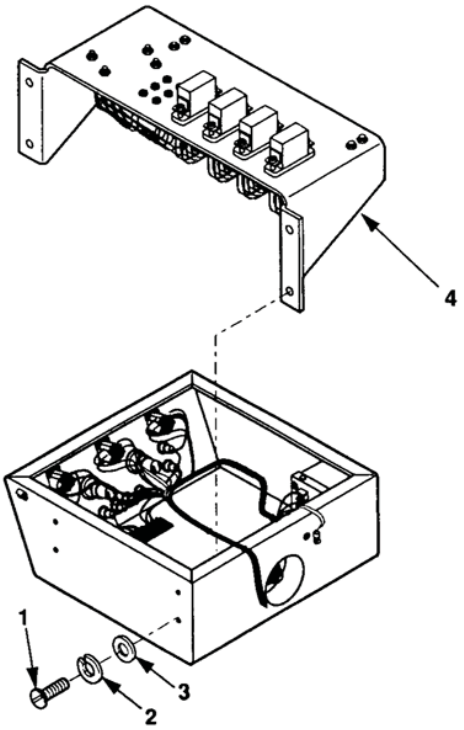

Figure 4. Relay Board Assembly Removal.

7. Refer to Table 1 and tag and disconnect all W9 wires from terminal board TB1 and TB2.

8. Refer to Table 1 and wiring diagram (FO-1), and tag and disconnect all W9 wires from switches S1, S2, and S10; indicator light housings XDS1 through XDS7; and permissive paralleling relay PP.
9. Remove switch box wiring harness W9 from switch box.

END OF TASK

REPAIR

Refer to WP 0058, Figure 1.

END OF TASK

INSTALLATION

1. Position harness in switch box.
2. Using WP 0036, Figures 3, 4 and FO-1 as a reference, connect wires to switches S1, S2, and S10; indicator light housings XDS1-XDS7; and permissive paralleling relay PP.
3. Refer to Table 1 and connect all W9 leads to terminal boards TB-1 and TB-2.
4. Position relay board (Figure 4, Item 4) and install four flat washers (3), lockwashers (2), and screws (1).
5. Install W9 harness leads (Figure 3, Item 3), internal tooth washer (2), and nut (1) on load terminals N and L3 (4).
6. Place insulation sleeving on leads W9-20 and W9-49 and solder leads to resistor R3.
7. Slide sleeving over solder joint and heat shrink.
8. Refer to Table 1 and install W9 wires (Figure 2, Item 7), flat washers (6), lockwashers (5), and nuts (4) on contactor terminals (9).
9. Refer to Table 1 and install W9 leads (12) on terminals (13) using screws (11).
10. Install contactor shield (3), two lockwashers (2), and screws (1) over contactor terminals A2, B2, and C2.

END OF TASK

REPLACEMENT

Replace is the same as removal and installation.

END OF TASK

END OF WORK PACKAGE

FIELD MAINTENANCE

10 kW 60 AND 400 Hz TRAILER-MOUNTED POWER UNITS AND POWER PLANTS

RELAY BOARD HARNESS W11: TESTING, REMOVAL, REPAIR, INSTALLATION, REPLACEMENT

INITIAL SETUP:

Tools and Special Tools
Tool Kit, General Mechanic's Automotive or Standard Automotive Tool Set (WP 0101, Table 2, Item 9)
Solder Gun (WP 0101, Table 2, Item 6)
Crimping Tool, Hand (WP 0101, Table 2, Item 6)
Multimeter (WP 0101, Table 2, Item 6)

Materials/Parts
Solder
Lockwashers

Equipment Condition
Both generator sets shut down; WP 0005, Stopping Generator Set.
Trailer handbrakes set, front support leg/landing leg lowered, and rear leveling-support jack lowered; WP 0005, Positioning Power Plant/Power Unit.
Switch box cover open.

References
Relay Board Harness Assembly W11 (WP 0057)
Wiring diagram (FO-1)

NOTE

The following warnings apply to all maintenance tasks in this work package.

WARNING

All metal jewelry can conduct electricity and become entangled in generator set components. Remove all jewelry when working on generator set. Failure to comply with this warning can cause injury or death to personnel.

WARNING

DO NOT wear loose clothing when performing checks, services and maintenance. Failure to comply with this warning can cause injury or death to personnel.

WARNING

High voltage is produced when this generator set is in operation. Make sure unit or units are completely shut down and free of any power source before attempting any repair or maintenance on the unit, switch box or when connecting or disconnecting load cables. Failure to comply with this warning can cause injury or death to personnel.

WARNING

High voltage is produced when this generator set is in operation. SHUT DOWN generator set and make sure it is free of any power source before attempting any repair or maintenance on the generator, switch box or when connecting or disconnecting load cables. Failure to comply with this warning can cause injury or death to personnel.

WARNING

Shut down generator sets before removing indicator lamp. Failure to comply with this warning can cause injury or death to personnel.

TESTING

1. Remove four screws (Figure 1, Item 1), lockwashers (2), and flat washers (3), and invert relay board assembly (4).
2. Refer to wiring diagram (FO-1) and Table 1, and perform continuity check of relay board harness W11.

Table 1. Relay Board Harness Wire List.

WIRE NO.	FROM	TO
W11-1	XK3-2	TB1-1
W11-2	XK3-3	TB1-6
W11-3	XK3-4	TB1-5
W11-4	XK3-5	TB1-3
W11-5	XK3-6	TB1-4
W11-6	XK3-7	TB1-2
W11-7	XK5-2	TB1-1
W11-8	XK5-3	TB1-8
W11-9	XK5-4	TB1-10
W11-10	XK5-5	TB1-17
W11-11	XK5-6	TB1-6
W11-12	E-7	E-6
W11-13	XK4-2	TB1-14
W11-14	XK4-3	TB1-9
W11-15	XK4-4	TB1-5
W11-16	XK4-5	TB1-3
W11-17	XK4-6	TB1-7
W11-18	XK4-7	TB1-15

WIRE NO.	FROM	TO
W11-19	R1-1	TB1-17
W11-20	XK6-3	TB1-12
W11-21	XK6-4	TB1-11
W11-22	XK6-5	TB1-16
W11-23	XK6-6	TB1-13
W11-24	XK6-7	TB1-15
W11-25	R1-2	E6
W11-26	R2-2	E3
W11-27	E5	TB1-1
W11-28	E4	TB1-2
W11-29	R2-1	TB1-16
W11-30	E2	TB1-15
W11-31	E1	E4
W11-32	XK5-7	TB1-2
W11-33	E1	TB1-14
W11-34	E8	TB1-18
W11-35	XK6-2	TB1-14
W11-36	E9	E3

NOTE

Wire being checked must be disconnected at one location to isolate wire for continuity check.

3. If any wire fails continuity check, repair or replace relay board harness.
4. If all wires pass continuity check, install relay board assembly (4), four flat washers (3), lockwashers (2), and screws (1).

END OF TASK

REMOVAL

1. Remove four screws (1), lockwashers (2), flat washers (3), and invert relay board assembly (4).

NOTE

Other leads removed during removal of W11 harness leads must be replaced with any attaching hardware.

2. Refer to relay board harness wire list (Table 1), and tag and disconnect all W11 leads from terminal board (5) and relay sockets (6).
3. Remove relay board harness W11.

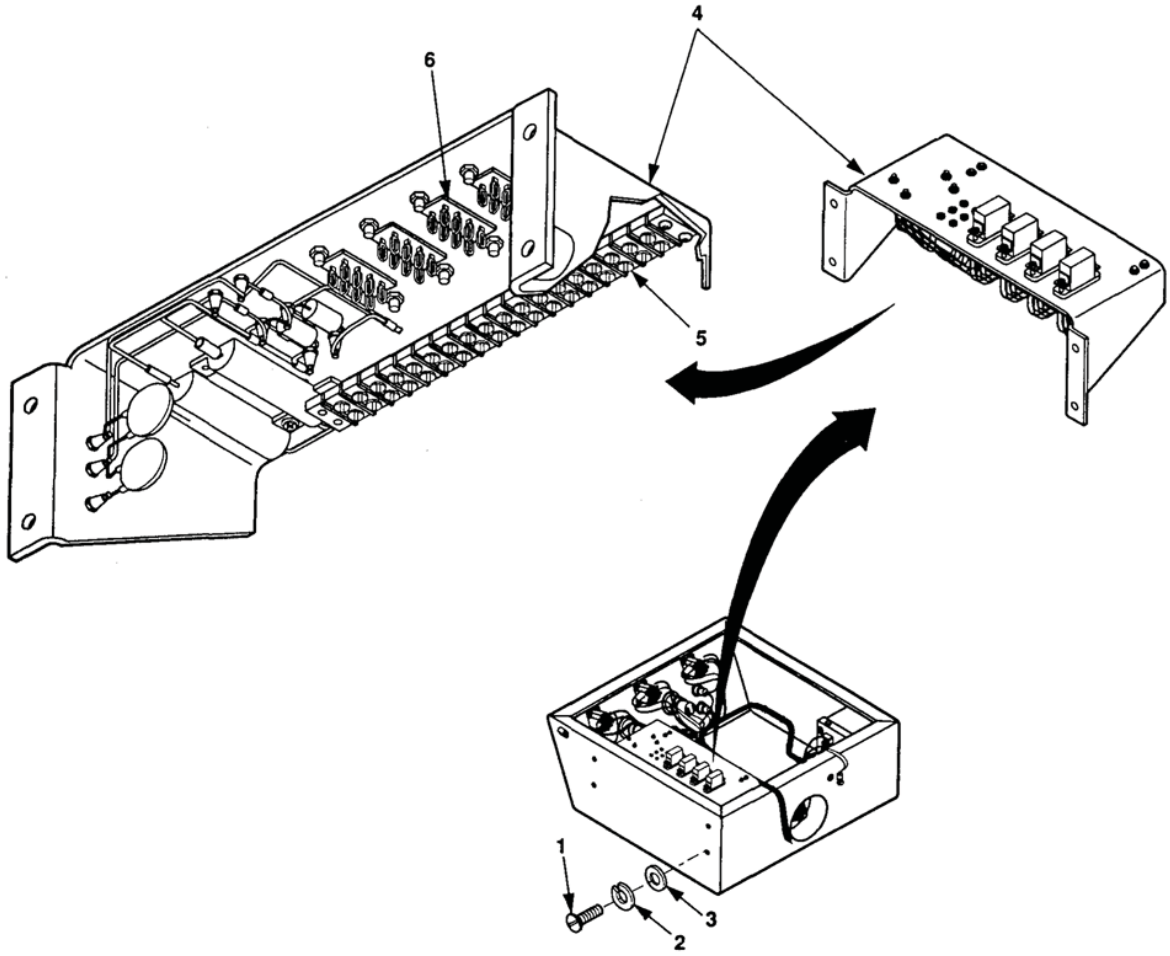

Figure 1. Relay Board Harness Assembly W11 Removal.

END OF TASK

REPAIR

Refer to WP 0057, Figure 1.

END OF TASK

INSTALLATION

1. Position wiring harness W11 on relay board so that wire ends having terminal lugs are near TB1 terminals (5).
2. Refer to Table 1 and connect all W11 leads.
3. Position relay board assembly (4), and install four flat washers (3), lockwashers (2), and screws (1).

END OF TASK

REPLACEMENT

Replace is the same as removal and installation.

END OF TASK

END OF WORK PACKAGE

FIELD MAINTENANCE

10 kW 60 AND 400 Hz TRAILER-MOUNTED POWER UNITS AND POWER PLANTS

OUTPUT CONNECTOR HARNESS W10: TESTING, REMOVAL, REPAIR, INSTALLATION, REPLACEMENT

INITIAL SETUP:

Tools and Special Tools
Tool Kit, General Mechanic's Automotive or Standard Automotive Tool Set (WP 0101, Table 2, Item 9)
Solder Gun (WP 0101, Table 2, Item 6)
Crimping Tool, Hydraulic (WP 0101, Table 2, Item 1)
Multimeter (WP 0101, Table 2, Item 2)

Materials/Parts
Solder
Lockwashers

References
Output connector harness assembly (WP 0059)
Wiring diagram (FO-1)

Equipment Condition
Both generator sets shut down; WP 0005, Stopping Generator Set.
Trailer handbrakes set, front support leg/landing leg lowered, and rear leveling-support jack lowered; WP 0005, Positioning Power Plant/Power Unit.
Switch box cover open.

NOTE

The connector is optional on the switchbox. Check switchbox to see if this procedure applies. See Chapter 2 for operation.

NOTE

The following warnings apply to all maintenance tasks in this work package.

WARNING

All metal jewelry can conduct electricity and become entangled in generator set components. Remove all jewelry when working on generator set. Failure to comply with this warning can cause injury or death to personnel.

WARNING

DO NOT wear loose clothing when performing checks, services and maintenance. Failure to comply with this warning can cause injury or death to personnel.

WARNING

High voltage is produced when this generator set is in operation. Make sure unit or units are completely shut down and free of any power source before attempting any repair or maintenance on the unit, switch box or when connecting or disconnecting load cables. Failure to comply with this warning can cause injury or death to personnel.

WARNING

High voltage is produced when this generator set is in operation. SHUT DOWN generator set and make sure it is free of any power source before attempting any repair or maintenance on the generator, switch box or when connecting or disconnecting load cables. Failure to comply with this warning can cause injury or death to personnel.

WARNING

Shut down generator sets before removing indicator lamp. Failure to comply with this warning can cause injury or death to personnel.

NOTE

Refer to FO-1 for wiring diagram

TESTING

1. Check continuity of output connector harness as listed in Table 1.

Table 1. Output Connector Harness Continuity Check.

FROM	TO	CONTINUITY	NO CONTINUITY
L0	L1		X
L0	L2		X
L0	L3		X
L0	GND	X	
L1	L2		X
L1	L3		X
L1	GND		X
L2	L3		X
L2	GND		X
L3	GND		X
J1-A	L1	X	
J1-B	L2	X	
J1-C	L3	X	
J1-N	L0	X	
J1-G	GND	X	

2. If any wire fails continuity check, repair or replace output connector harness.

END OF TASK

REMOVAL

1. Remove nuts (Figure 1, Item 8), and internal tooth washers (9), from switch box load terminals (11).

NOTE

Other leads removed during removal of W11 harness leads must be replaced with any attaching hardware.

2. Tag and remove output connector leads (10) from switch box load terminals (11).
3. Remove four nuts (7) lockwashers (6), eight flat washers (2), chain (3) attached to dust cover, four screws (1), and output connector (4).

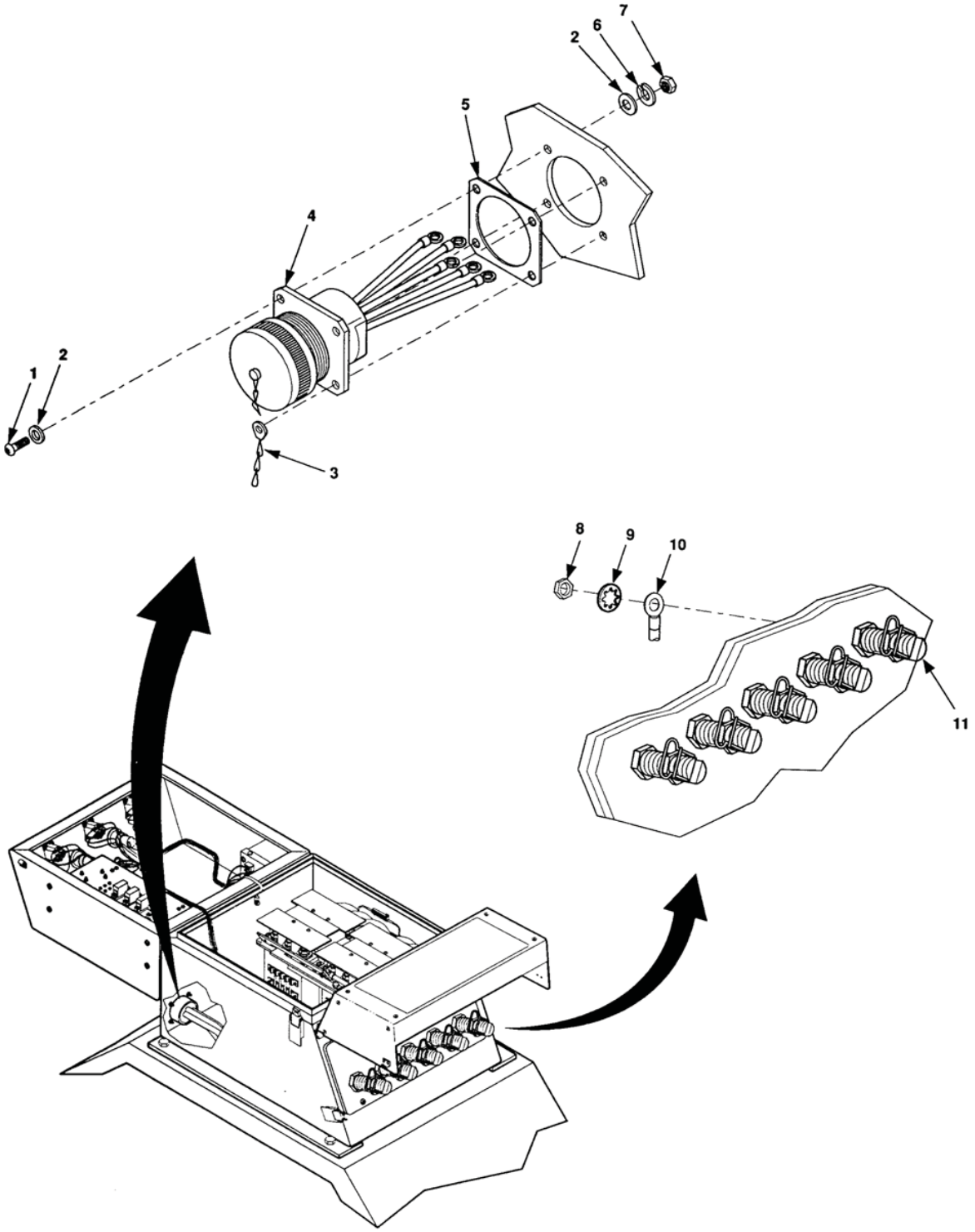

Figure 1. Output Connector Harness.

END OF TASK

REPAIR

Refer to WP 0059, Figure 1.

END OF TASK

INSTALLATION

1. Install output connector (4), chain (3) attached to dust cover, four screws (1), eight flat washers (2), four lockwashers (6), and nuts (7).
2. Refer to wiring diagram (FO-1) and tags placed on leads during removal, and install leads (10), internal tooth washers (9), and nuts (8) on load terminals (11).

END OF TASK

REPLACEMENT

Replace is the same as removal and installation.

END OF TASK

END OF WORK PACKAGE

FIELD MAINTENANCE

10 kW 60 AND 400 Hz TRAILER-MOUNTED POWER UNITS AND POWER PLANTS

RELAYS K3-K6: REMOVAL, TESTING, INSTALLATION, REPLACEMENT

INITIAL SETUP:

Tools and Special Tools
Tool Kit, General Mechanic's Automotive or Standard Automotive Tool Set (WP 0101, Table 2, Item 9)
Multimeter (WP 0101, Table 2, Item 2)
24 VDC Power Source (WP 0101, Table 2, Item 6)

Materials/Parts
Lockwashers

Equipment Condition
Both generator sets shut down; WP 0005, Stopping Generator Set.
Trailer handbrakes set, front support leg/landing leg lowered, and rear leveling-support jack lowered; WP 0005, Positioning Power Plant/Power Unit.
Switch box cover open.

NOTE

The following warnings apply to all maintenance tasks in this work package.

WARNING

All metal jewelry can conduct electricity and become entangled in generator set components. Remove all jewelry when working on generator set. Failure to comply with this warning can cause injury or death to personnel.

WARNING

DO NOT wear loose clothing when performing checks, services and maintenance. Failure to comply with this warning can cause injury or death to personnel.

WARNING

High voltage is produced when this generator set is in operation. Make sure unit or units are completely shut down and free of any power source before attempting any repair or maintenance on the unit, switch box or when connecting or disconnecting load cables. Failure to comply with this warning can cause injury or death to personnel.

WARNING

High voltage is produced when this generator set is in operation. SHUT DOWN generator set and make sure it is free of any power source before attempting any repair or maintenance on the generator, switch box or when connecting or disconnecting load cables. Failure to comply with this warning can cause injury or death to personnel.

WARNING

Shut down generator sets before removing indicator lamp. Failure to comply with this warning can cause injury or death to personnel.

REMOVAL

Remove two screws (Figure 1, Item 1), washers (2), and relays (3) from relay sockets (4).

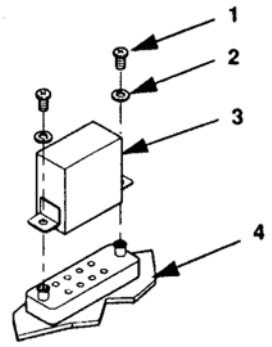

Figure 1. Relay K3-K6 Removal.

END OF TASK

TESTING

1. Repeat removal step above.
2. Refer to Figure 2 and check continuity of relay coil between pins X1 and X2.

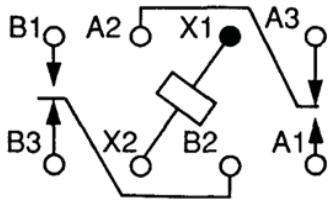

COIL DEENERGIZED

Figure 2. Relay K3-K6 Schematic.

WARNING

Dangerous voltage exists on live circuits. Always observe precautions and never work alone. Failure to comply with this warning can cause injury or death to personnel.

3. Attach 24 VDC power source across pins X1 and X2 of relay and check continuity of relay contacts before and after relay is energized as listed in Table 1.

Table 1. Relay Operation.

RELAY STATUS	CONTINUITY BETWEEN PINS	NO CONTINUITY BETWEEN PINS
Power NOT Applied	A2 and A3 B2 and B3	Al and A2 B1 and B2
Power Applied	A1 and A2 B1 and B2	A2 and A3 B2 and B3

4. If all multimeter indications are correct, perform installation procedures.

5. If any multimeter indication is not as listed in Table 1 perform installation with new relay.

END OF TASK

INSTALLATION

Install relay (Figure 1, Item 3) in relay socket (4) and secure with two washers (2) and screws (1).

END OF TASK

REPLACEMENT

Replace is the same as removal and installation.

END OF TASK

END OF WORK PACKAGE

FIELD MAINTENANCE

10 kW 60 AND 400 Hz TRAILER-MOUNTED POWER UNITS AND POWER PLANTS

PERMISSIVE PARALLELING RELAY: REMOVAL, TESTING, INSTALLATION, REPLACEMENT

INITIAL SETUP:

Tools and Special Tools
Tool Kit, General Mechanic's Automotive or Standard Automotive Tool Set (WP 0101, Table 2, Item 9)
Multimeter (WP 0101, Table 2, Item 2)
Power Oscillator, 50-420 Hz (WP 0101, Table 2, Item 6)

Equipment Condition
Both generator sets shut down; WP 0005, Stopping Generator Set.
Trailer handbrakes set, front support leg/landing leg lowered, and rear leveling-support jack lowered; WP 0005, Positioning Power Plant/Power Unit.
Switch box cover open.

Materials/Parts
Lockwashers

NOTE

The following warnings apply to all maintenance tasks in this work package.

WARNING

All metal jewelry can conduct electricity and become entangled in generator set components. Remove all jewelry when working on generator set. Failure to comply with this warning can cause injury or death to personnel.Shut down generator sets before removing indicator lamp. Failure to comply with this warning can cause injury or death to personnel. Shut down generator sets before performing internal inspection of switch box. Failure to comply with this warning can cause injury or death to personnel.

WARNING

High voltage is produced when this generator set is in operation. Make sure unit or units are completely shut down and free of any power source before attempting any repair or maintenance on the unit, switch box or when connecting or disconnecting load cables. Failure to comply with this warning can cause injury or death to personnel.

WARNING

DO NOT wear loose clothing when performing checks, services and maintenance. Failure to comply with this warning can cause injury or death to personnel.

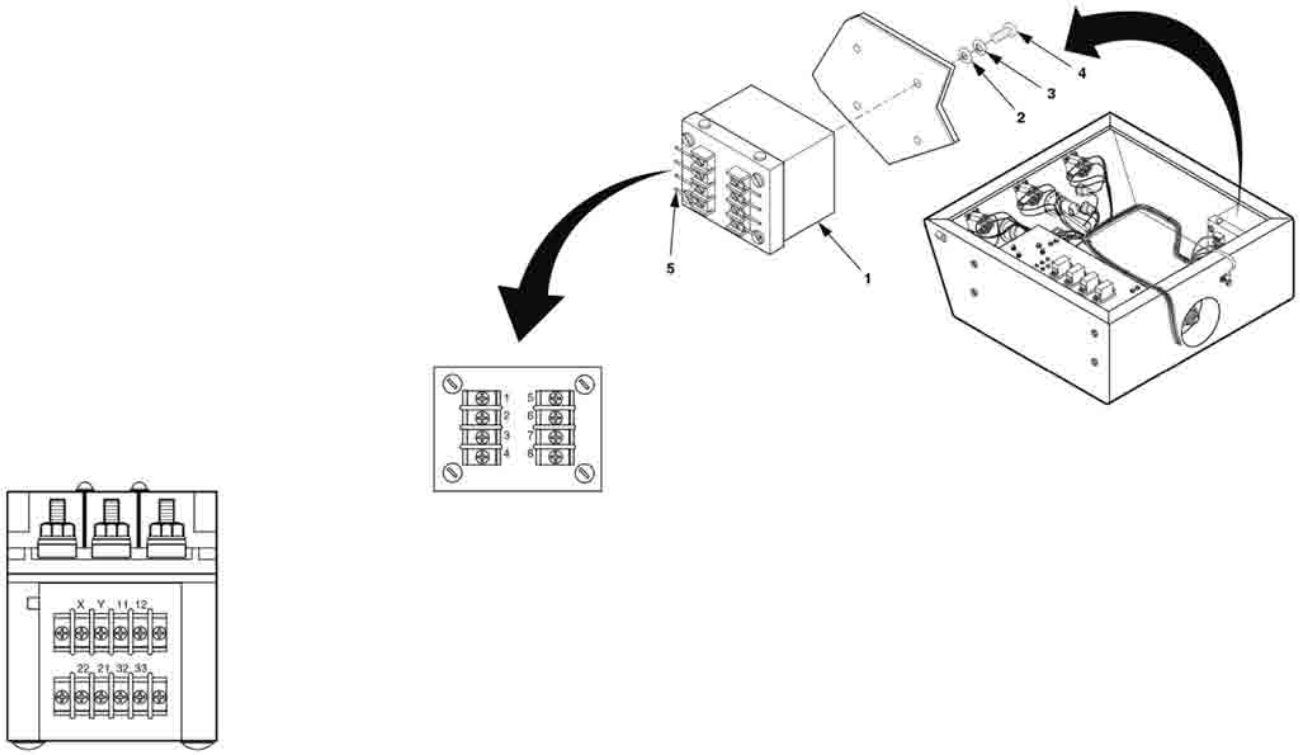

Figure 1. Permissive Paralleling Relay.

REMOVAL

Tag and disconnect leads (Figure 1, Item 5). Remove four screws (4), lockwashers (3), flat washers (2), and permissive paralleling relay (1).

END OF TASK

TESTING

1. Perform removal procedure above and position permissive paralleling relay (1) on work surface. Connect a variable AC voltage, 50-420 Hz, power oscillator across terminals 1 and 2.
2. Connect multimeter across terminals 5 and 6 and check for continuity. If continuity exists, leave multimeter connected for remainder of test. If no continuity exists, replace relay.
3. Connect a variable AC voltage, 50-420 Hz power oscillator, across terminals 1 and 2.
4. Apply 120 volts AC across terminals 3 and 4.
5. Adjust the oscillator output for 60 Hz (AN/MJQ-37) or 400 Hz (AN/MJQ-38).
6. Increase the oscillator output to a value of 20 volts. Multimeter should indicate no continuity. Slowly decrease the oscillator output until continuity is observed. Oscillator output voltage should be 8±1 VAC.
7. Increase the oscillator output until multimeter shows no continuity. Oscillator voltage should be no more than 1 volt above previous voltage reading.
8. Perform Steps 6 and 7 with multimeter connected across terminals 7 and 8.
9. Perform installation Procedure using new relay if it fails to meet the requirements of Steps 6 through 8.

10. If relay meets the requirements of Steps 6 through 8 perform installation procedures.

END OF TASK

INSTALLATION

Position permissive paralleling relay (1) in switch box and install flat washer (2), lockwasher (3), and screw (4). Connect leads (5).

END OF TASK

REPLACEMENT

Replace is the same as removal and installation.

END OF TASK

END OF WORK PACKAGE

FIELD MAINTENANCE

10 kW 60 AND 400 Hz TRAILER-MOUNTED POWER UNITS AND POWER PLANTS

CONTACTORS K1 AND K2: REMOVAL, TESTING, INSTALLATION, REPLACEMENT

INITIAL SETUP:

Tools and Special Tools
Tool Kit, General Mechanic's Automotive or Standard Automotive Tool Set (WP 0101, Table 2, Item 9)
Multimeter (WP 0101, Table 2, Item 2)

Equipment Condition
Both generator sets shut down; WP 0005, Stopping Generator Set.
Trailer handbrakes set, front support leg/landing leg lowered, and rear leveling-support jack lowered; WP 0005, Positioning Power Plant/Power Unit.
Switch box cover open.

Materials/Parts
Lockwashers

References
Wiring diagram (FO-1)

NOTE

The following warnings apply to all maintenance tasks in this work package.

WARNING

All metal jewelry can conduct electricity and become entangled in generator set components. Remove all jewelry when working on generator set. Failure to comply with this warning can cause injury or death to personnel.

WARNING

DO NOT wear loose clothing when performing checks, services and maintenance. Failure to comply with this warning can cause injury or death to personnel.

WARNING

High voltage is produced when this generator set is in operation. Make sure unit or units are completely shut down and free of any power source before attempting any repair or maintenance on the unit, switch box or when connecting or disconnecting load cables. Failure to comply with this warning can cause injury or death to personnel.

WARNING

High voltage is produced when this generator set is in operation. SHUT DOWN generator set and make sure it is free of any power source before attempting any repair or maintenance on the generator, switch box or when connecting or disconnecting load cables. Failure to comply with this warning can cause injury or death to personnel.

WARNING

Shut down generator sets before removing indicator lamp. Failure to comply with this warning can cause injury or death to personnel.

REMOVAL

1. Remove four screws (Figure 1, Item 1), lockwashers (2) and terminal shields (3) from contactor (9).
2. Remove nuts (4), lockwashers (5), and flat washers (6) from all contactor terminals (8).

NOTE

Leads W3, W4, and W5 (13, 14, and 15) must be removed along with leads W6, W7, and W8 when contactor K1 is being removed.

3. Tag and remove power cable leads (7) from contactor terminals A2, B2, and C2 (8), and ends of leads W6, W7, and W8 (10, 11, and 12) from contactor terminals A1, B1, and C1 (8).
4. Tag and disconnect terminal lugs of W9 wires from contactor (8) terminals (16) X, Y, 11, 12, 21, 22, 32, and 33.
5. Remove four nuts (17), lockwashers (18), flat washers (19), and contactor (9).

END OF TASK

TESTING

1. Check for continuity between contactor terminals X and Y. If no continuity, replace contactor.

WARNING

Dangerous voltage exists on live circuits. Always observe precautions and never work alone. Failure to comply with this warning can cause injury or death to personnel.

2. Attach 115 VAC power source across pins x and y of contactor and check continuity of relay contacts before and after contactor is energized as listed in Table 1.

NOTE

Contactor shown is K2.

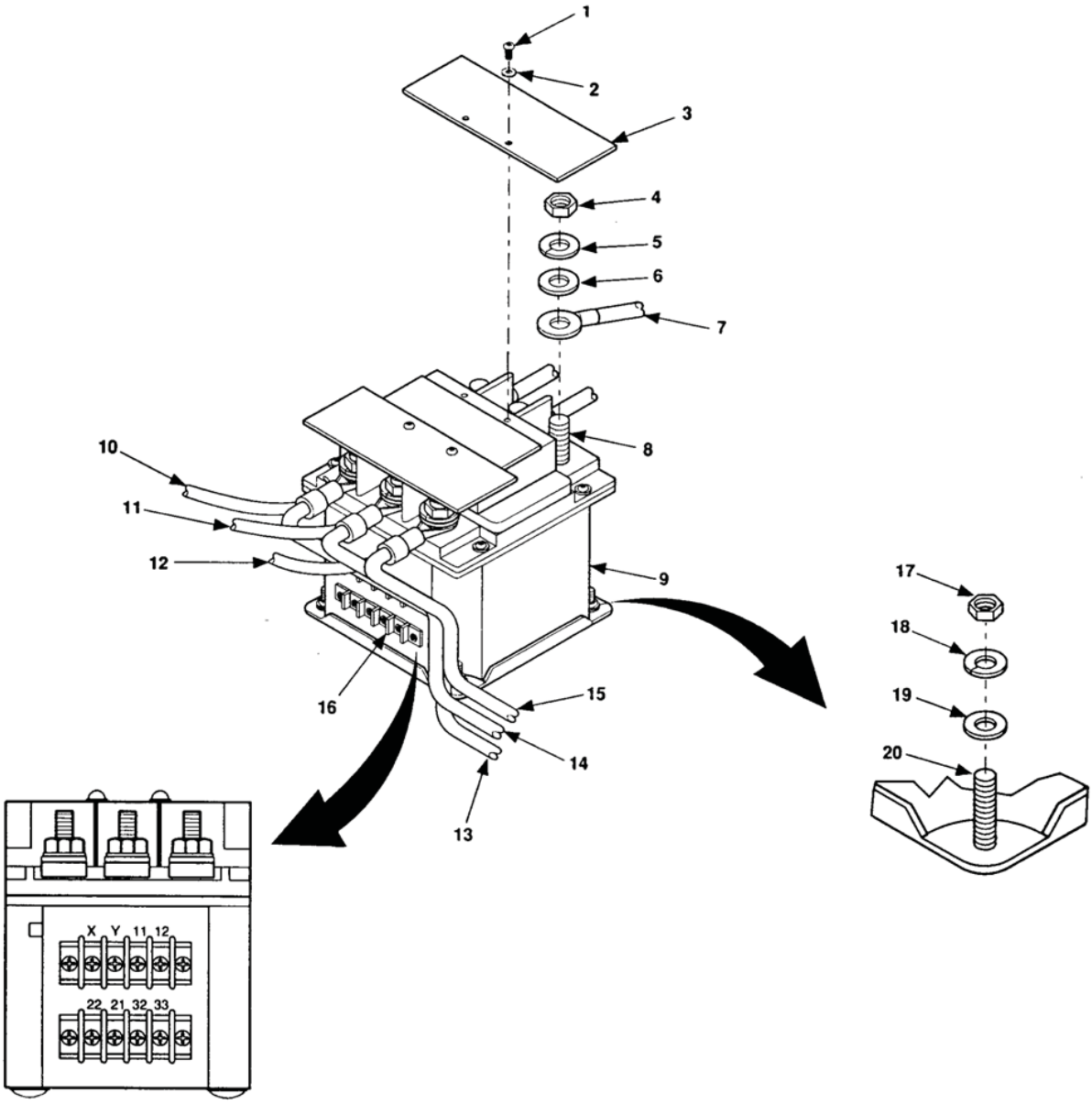

Figure 1. Replace Contactor.

Table 1. Contactor Operation.

CONTACTOR STATUS	CONTINUITY BETWEEN PINS	NO CONTINUITY BETWEEN PINS
Power NOT Applied	32 and 33	21 and 22 11 and 12 A1 and A2 B1 and B2 C1 and C2

Table 1. Contactor Operation. - Continued

CONTACTOR STATUS	CONTINUITY BETWEEN PINS	NO CONTINUITY BETWEEN PINS
Power Applied	21 and 22 11 and 12 A1 and A2 B1 and B2 C1 and C2	32 and 33

3. If all multimeter indications are correct, install contactor terminal shield (3), four flat washers (2), and screws (1).
4. Replace contactor if any multimeter indication is not as listed in Table 1.

END OF TASK

INSTALLATION

1. Position contactor K1 or K2 (9) on studs (20).
2. Install four flat washers (19), lockwashers (18), and nuts (17).
3. Refer to wiring diagram (FO-1) and tags installed in removal. Connect applicable terminal lugs of W9 wires to contactor terminals (16) X, Y, 11, 12, 21, 22, 32, and 33. Remove tags.
4. If terminal shields (3) of contactor are installed, remove four screws (1), lockwashers (2) and terminal shields (3).
5. Remove nuts (4), lockwashers (5), and flat washers (6) from contactor terminals (8) A1, B1, C1, A2, B2, and C2.

NOTE

Leads W3, W4, and W5 (13, 14, and 15) must be installed along with leads W6, W7, and W8 (10, 11, and 12) when contactor K1 is being installed.

6. Place free ends of jumpers W6, W7, and W8 (10, 11, and 12) on contactor K2 (9) terminals (8) A1, B1, and C1.
7. Install flat washer (6), lockwasher (5), and nut (4) on terminals (8) for A1, B1, and C1. Tighten nuts (4).
8. Place power cable leads (7) on contactor terminals (8) A2, B2, and C2. Remove tags.
9. Install flat washers (6), lockwashers (5), and nuts (4) on contactor terminals (8) A2, B2, and C2.
10. Install terminal shields (3), two lockwashers (2) and screws (1) on contactor (9).

END OF TASK

REPLACEMENT

Replace is the same as removal and installation.

END OF TASK

END OF WORK PACKAGE

FIELD MAINTENANCE

10 kW 60 AND 400 Hz TRAILER-MOUNTED POWER UNITS AND POWER PLANTS

RESISTORS R1-R3: TESTING, REMOVAL, INSTALLATION, REPLACEMENT

INITIAL SETUP:

Tools and Special Tools
Tool Kit, General Mechanic's Automotive or Standard Automotive Tool Set (WP 0101, Table 2, Item 9)
Multimeter (WP 0101, Table 2, Item 2)
Soldering Gun (WP 0101, Table 2, Item 6)

Materials/Parts
Lockwashers
Solder
Resistor

Equipment Condition
Both generator sets shut down; WP 0005, Stopping Generator Set.
Trailer handbrakes set, front support leg/landing leg lowered, and rear leveling-support jack lowered; WP 0005, Positioning Power Plant/Power Unit.
Switch box cover open.

NOTE

The following warnings apply to all maintenance tasks in this work package.

WARNING

All metal jewelry can conduct electricity and become entangled in generator set components. Remove all jewelry when working on generator set. Failure to comply with this warning can cause injury or death to personnel.

WARNING

DO NOT wear loose clothing when performing checks, services and maintenance. Failure to comply with this warning can cause injury or death to personnel.

WARNING

High voltage is produced when this generator set is in operation. Make sure unit or units are completely shut down and free of any power source before attempting any repair or maintenance on the unit, switch box or when connecting or disconnecting load cables. Failure to comply with this warning can cause injury or death to personnel.

WARNING

High voltage is produced when this generator set is in operation. SHUT DOWN generator set and make sure it is free of any power source before attempting any repair or maintenance on the generator, switch box or when connecting or disconnecting load cables. Failure to comply with this warning can cause injury or death to personnel.

WARNING

Shut down generator sets before removing indicator lamp. Failure to comply with this warning can cause injury or death to personnel.

TESTING

NOTE

If testing R1 or R2, Step 1 must be performed.

1. Remove four screws (Figure 1, Item 1), lockwashers (2), and flat washers (3) and invert relay board assembly (4).
2. Measure resistance of R1 (5) or R2 (6) for 246.5-251.5 ohms. If resistance is out of tolerance, replace resistor.
3. Measure resistance of R3 (11) for 246.5-251.5 ohms. If resistance is out of tolerance, replace resistor.
4. If resistors R1 and R2 are within tolerance, place relay board assembly in position and secure with flat washers (3), lockwashers (2), and screws (1).

END OF TASK

REMOVAL

NOTE

If removing R1 or R2, Step 1 must be performed.

1. Remove four screws (Figure 1, Item 1), lockwashers (2), and flat washers (3) and invert relay board assembly (4).
2. Tag and unsolder leads from resistor.
3. Remove two nuts (9), lockwashers (8), flat washers (7), screws (10), and resistor (5, 6, or 11).

END OF TASK

INSTALLATION

1. Install resistor (5, 6, or 11), two screws (10), flat washers (7), lockwashers (8), and nuts (9).
2. Solder leads to resistor.
3. Position relay board assembly (4) and install four flat washers (3), lockwashers (2), and screws (1).

END OF TASK

REPLACEMENT

Replace is the same as removal and installation.

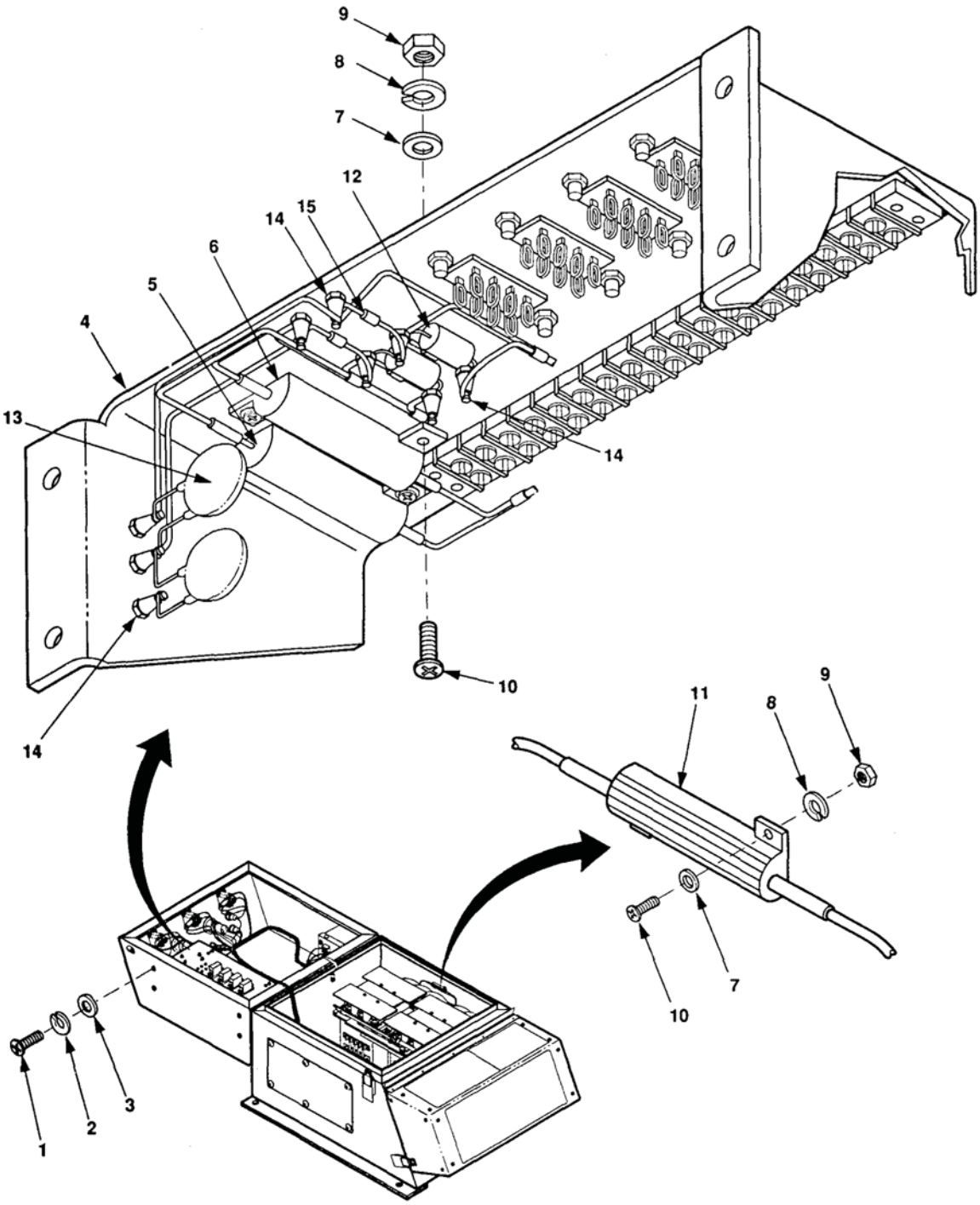

Figure 1. Resistors, Capacitors, and Diodes.

END OF TASK

END OF WORK PACKAGE

FIELD MAINTENANCE

10 kW 60 AND 400 Hz TRAILER-MOUNTED POWER UNITS AND POWER PLANTS

CAPACITORS C1-C4: TESTING, REMOVAL, INSTALLATION

INITIAL SETUP:

Tools and Special Tools
Tool Kit, General Mechanic's Automotive or Standard Automotive Tool Set (WP 0101, Table 2, Item 9)
Multimeter (WP 0101, Table 2, Item 2)
Soldering Gun (WP 0101, Table 2, Item 6)

References
Resistors R1-R3 (WP 0044, Figure 1)
Wiring diagram (FO-1)

Materials/Parts
Solder
Capacitor

Equipment Condition
Both generator sets shut down; WP 0005, Stopping Generator Set.
Trailer handbrakes set, front support leg/landing leg lowered, and rear leveling-support jack lowered; WP 0005, Positioning Power Plant/Power Unit.
Switch box cover open.

NOTE

The following warnings apply to all maintenance tasks in this work package.

WARNING

All metal jewelry can conduct electricity and become entangled in generator set components. Remove all jewelry when working on generator set. Failure to comply with this warning can cause injury or death to personnel.

WARNING

DO NOT wear loose clothing when performing checks, services and maintenance. Failure to comply with this warning can cause injury or death to personnel.

WARNING

High voltage is produced when this generator set is in operation. Make sure unit or units are completely shut down and free of any power source before attempting any repair or maintenance on the unit, switch box or when connecting or disconnecting load cables. Failure to comply with this warning can cause injury or death to personnel.

WARNING

High voltage is produced when this generator set is in operation. SHUT DOWN generator set and make sure it is free of any power source before attempting any repair or maintenance on the generator, switch box or when connecting or disconnecting load cables. Failure to comply with this warning can cause injury or death to personnel.

WARNING

Shut down generator sets before removing indicator lamp. Failure to comply with this warning can cause injury or death to personnel.

NOTE

To perform procedure refer to FO-1.

TESTING

1. Remove four screws (WP 0044, Figure 1, Item 1), lockwashers (2), and flat washers (3) and invert relay board assembly (4).
2. Discharge capacitors C1 and C2 (12) and C3 and C4 (13) by shorting across terminals.
3. Isolate capacitors C1 and C2 at E5, and E2 (14) respectively. Tag and remove wire W11-34 at TB1-18 to isolate capacitors C3 and C4.
4. Disconnect one end of capacitor and check continuity between terminals, using a multimeter in the 200 k/ohms range. The meter needle should deflect and return to infinity within a few seconds. (If using a digital meter, the readout should run upscale to infinity).
5. If capacitor fails test, replace it. Refer to removal and installation Procedures.
6. If capacitor passes test, place relay board assembly (WP 0044, Figure 1, Item 4) in position and secure with four flat washers (3), lockwashers (2), and screws (1).

END OF TASK

REMOVAL

1. Remove four screws (1), lockwashers (2), and flat washers (3) and invert relay board assembly (4).
2. Unsolder capacitor (12 or 13) leads from stud terminals (14) and remove capacitor.

END OF TASK

INSTALLATION

CAUTION

Refer to wiring diagram (FO-1) and observe polarity of capacitors C1 and C2 before installing. Failure to observe this caution could result in damage to capacitors.

1. Solder capacitor (12 or 13) leads to terminal studs (14) as applicable.
2. Invert relay board assembly (4) and install four flat washers (3), lockwashers (2), and screws (1).

END OF TASK

END OF WORK PACKAGE

FIELD MAINTENANCE

10 kW 60 AND 400 Hz TRAILER-MOUNTED POWER UNITS AND POWER PLANTS

DIODES CR1-CR4: TESTING, REMOVAL, INSTALLATION

INITIAL SETUP:

Tools and Special Tools
Tool Kit, General Mechanic's Automotive or Standard Automotive Tool Set (WP 0101, Table 2, Item 9)
Multimeter (WP 0101, Table 2, Item 2)
Soldering Gun (WP 0101, Table 2, Item 6)

References
Resistors R1-R3 (WP 0044, Figure 1)
Wiring diagram (FO-1)

Materials/Parts
Solder

Equipment Condition
Both generator sets shut down; WP 0005, Stopping Generator Set.
Trailer handbrakes set, front support leg/landing leg lowered, and rear leveling-support jack lowered; WP 0005, Positioning Power Plant/Power Unit.
Switch box cover open.

NOTE

The following warnings apply to all maintenance tasks in this work package.

WARNING

All metal jewelry can conduct electricity and become entangled in generator set components. Remove all jewelry when working on generator set. Failure to comply with this warning can cause injury or death to personnel.

WARNING

DO NOT wear loose clothing when performing checks, services and maintenance. Failure to comply with this warning can cause injury or death to personnel.

WARNING

High voltage is produced when this generator set is in operation. Make sure unit or units are completely shut down and free of any power source before attempting any repair or maintenance on the unit, switch box or when connecting or disconnecting load cables. Failure to comply with this warning can cause injury or death to personnel.

WARNING

High voltage is produced when this generator set is in operation. SHUT DOWN generator set and make sure it is free of any power source before attempting any repair or maintenance on the generator, switch box or when connecting or disconnecting load cables. Failure to comply with this warning can cause injury or death to personnel.

WARNING

Shut down generator sets before removing indicator lamp. Failure to comply with this warning can cause injury or death to personnel.

TESTING

NOTE

To perform procedure refer to FO-1.

1. Remove four screws (WP 0044, Figure 1, Item 1), lockwashers (2), and flat washers (3) and invert relay board assembly (4).
2. Unsolder one end of diode (15) to be tested.
3. Set multimeter on R x 1 range, and measure the resistance between diode terminals. Reverse multimeter leads and measure again. Resistance should be infinity in one direction and less than 30 ohms in the other.

END OF TASK

REMOVAL

1. Remove four screws (WP 0044, Figure 1, Item 1), lockwashers (2), flat washers (3) and invert relay board assembly (4).
2. Unsolder diode (15) from stud terminal (14) and remove diode.

END OF TASK

INSTALLATION

1. Refer to wiring diagram (FO-1) and solder diode leads to terminal studs (WP 0044, Figure 1, Item 14) as applicable.
2. Invert relay board assembly (4) and install four flat washers (3), lockwashers (2), and screws (1).

END OF TASK

END OF WORK PACKAGE

FIELD MAINTENANCE

10 kW 60 AND 400 Hz TRAILER-MOUNTED POWER UNITS AND POWER PLANTS

PU-798A AND PU-799A FLOOR AND FENDER: REMOVAL, REPAIR, INSTALLATION

INITIAL SETUP:

Tools and Special Tools
Tool Kit, General Mechanic's Automotive or Standard Automotive Tool Set (WP 0101, Table 2, Item 9)
Rivet Gun (WP 0101, Table 2, Item 3)
¼ Inch Drill (WP 0101, Table 2, Item 5)
Tool Kit, Body and Fender Repair (WP 0101, Table 2, Item 8)

Materials/Parts
Rivets (WP 0105, Table 1, Items 6 and 7)

Equipment Condition
Both generator sets shut down; WP 0005, Stopping Generator Set.
Trailer handbrakes set, front support leg/landing leg lowered, and rear leveling-support jack lowered; WP 0005, Positioning Power Plant/Power Unit.
Accessory box removed; WP 0027.
Generator set removed as required (WP 0036).

References
Fire Extinguisher and Bracket (WP 0028)
Data Plate and Reflector (WP 0030)
TM 9-2330-392-14&P

NOTE

The following warnings apply to all maintenance tasks in this work package.

WARNING

All metal jewelry can conduct electricity and become entangled in generator set components. Remove all jewelry when working on generator set. Failure to comply with this warning can cause injury or death to personnel.

WARNING

DO NOT wear loose clothing when performing checks, services and maintenance. Failure to comply with this warning can cause injury or death to personnel.

WARNING

When lifting generator set, use lifting equipment with minimum lifting capacity of 1750 pounds (793.8 kg). Do not stand or put arms, legs, or any part of the body under hoisted load. Do not permit generator set to swing. Failure to comply with this warning can result in personal injury or death and damage to equipment.

REMOVAL

1. Floors.

NOTE

PU-798A and PU-799A trailers have center and side floors or platforms riveted to the trailer. The side floors are in two sections.

   a. Remove rivets (Figure 1, Item 1) and floor sections (2) from trailer chassis (3), using ¼ in drill.

2. Fenders.
   a. If necessary, remove the following:
      (1) Data plate (WP 0030).
      (2) Fire extinguisher and bracket (WP 0028).
      (3) Side marker light and reflector (TM 9-2330-392-14&P).

b. Remove rivets (Figure 2, Item 1) and fender (2) from trailer chassis (3), using ¼ in drill.

END OF TASK

REPAIR

1. Floors.
   a. Repair of floors consists of welding, straightening, and spot painting as required.
2. Fenders.
   a. Repair of fenders consists of welding, straightening, and spot painting as required, and replacement of rivets (Figure 2, Item 4), fender angle support (5), and tail light bracket (6).

END OF TASK

INSTALLATION

1. Floors.
   a. Place floor section (Figure 1, Item 2) on trailer chassis (3) and secure with rivets (1).
2. Fenders.
   a. Place fender (Figure 2, Item 2) on trailer chassis (3) and secure with rivets (1).
   b. If removed, install the following:
      (1) Data plate (WP 0030).
      (2) Fire extinguisher and bracket (WP 0028).
      (3) Side marker light and reflector (TM 9-2330-392-14&P).
      (4) Switchbox (WP 0019 and WP 0020).

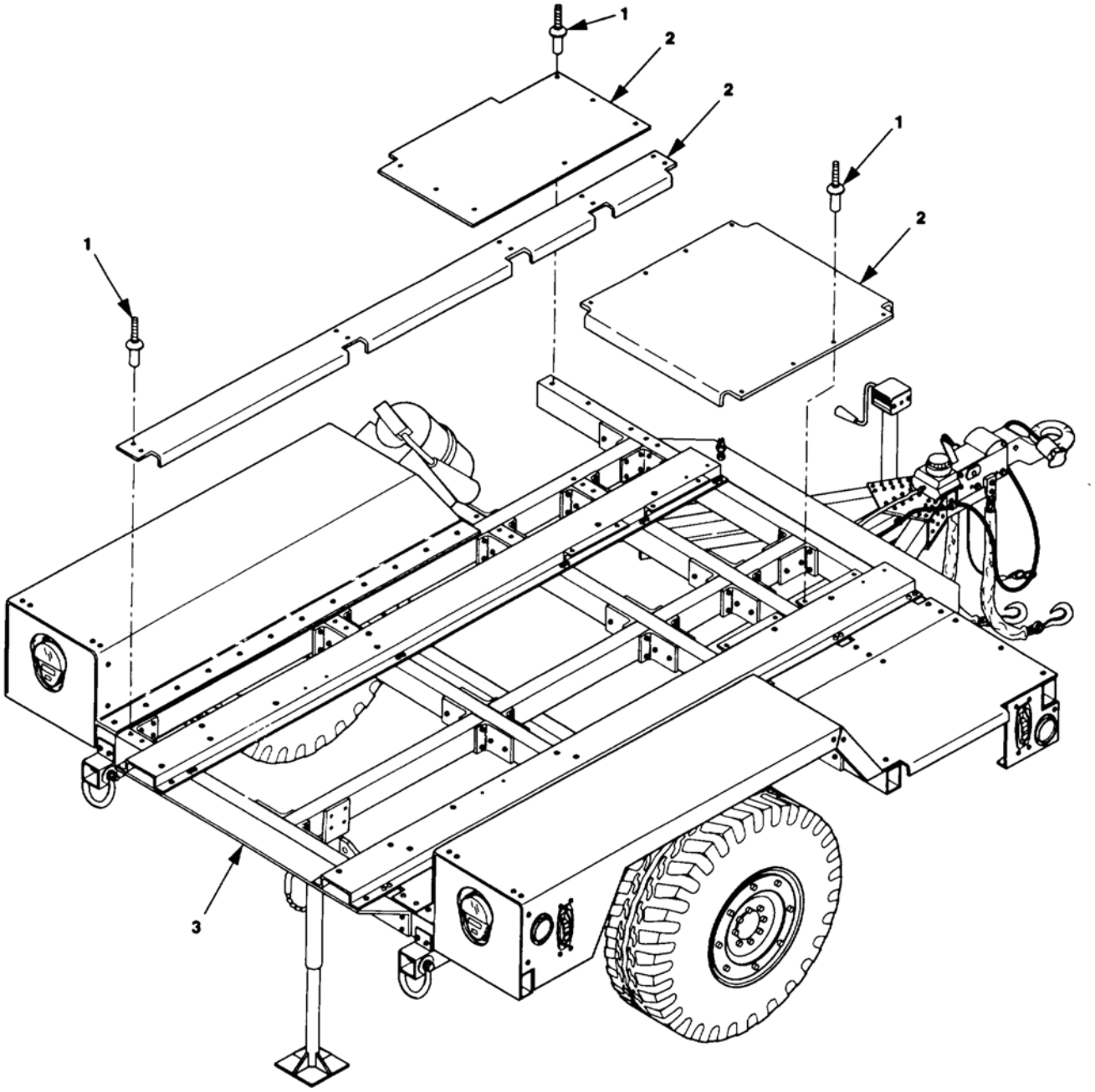

Figure 1. PU-798A and PU-799A Floor Replacement (LTT Trailer).

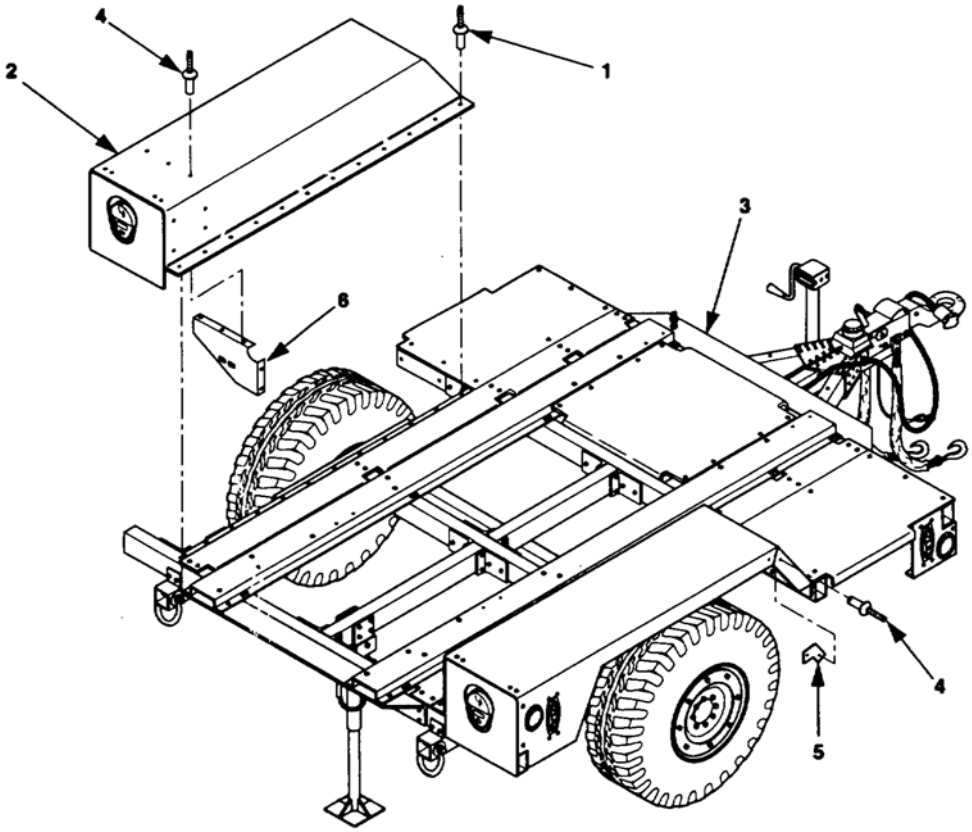

Figure 2. PU-798A and PU-799A Fender Replacement.

END OF TASK

END OF WORK PACKAGE

FIELD MAINTENANCE

10 kW 60 AND 400 Hz TRAILER-MOUNTED POWER UNITS AND POWER PLANTS

AN/MJQ-37, AN/MJQ-38, PU-798, AND PU-799 TRAILER FENDER REPAIR

INITIAL SETUP:

Tools and Special Tools

Tool Kit, General Mechanic's Automotive or Standard Automotive Tool Set (WP 0101, Table 2, Item 9)
Body and Fender Repair Tool Kit (WP 0101, Table 2, Item 8)
Shop Equipment, Welding, Field (WP 0101, Table 2, Item 7)

Equipment Condition

AN/MJQ-37 and AN/MJQ-38 Fenders removed; WP 0033.
PU-798 AND PU-799 Fenders removed; WP 0032.
PU-798A and PU-799A Fenders removed; WP 0047.

Materials/Parts

Paint

WARNING

All metal jewelry can conduct electricity and become entangled in generator set components. Remove all jewelry when working on generator set. Failure to comply with this warning can cause injury or death to personnel.

WARNING

DO NOT wear loose clothing when performing checks, services and maintenance. Failure to comply with this warning can cause injury or death to personnel.

REPAIR

Repair of the trailer fender consists of welding, straightening, and spot painting as required.

END OF TASK

END OF WORK PACKAGE

FIELD MAINTENANCE

10 kW 60 AND 400 Hz TRAILER-MOUNTED POWER UNITS AND POWER PLANTS

AN/MJO-37 AND AN/MJQ-38 GENERATOR MOUNTING RAIL: REMOVAL, REPAIR, INSTALLATION

INITIAL SETUP:

Tools and Special Tools
Tool Kit, General Mechanic's Automotive or Standard Automotive Tool Set (WP 0101, Table 2, Item 9)
Tool, Blind Nut (WP 0101, Table 2, Item 5)

Equipment Condition
Trailer handbrakes set, front support leg/landing leg lowered, and rear leveling-support jack lowered; WP 0005, Positioning Power Plant/Power Unit.
Generator sets removed; WP 0036.
Accessory box removed; WP 0027.
Fenders and platform removed; WP 0031.

Materials/Parts
Nuts, Self-locking
Nuts, Blind

WARNING

All metal jewelry can conduct electricity and become entangled in generator set components. Remove all jewelry when working on generator set. Failure to comply with this warning can cause injury or death to personnel.

WARNING

DO NOT wear loose clothing when performing checks, services and maintenance. Failure to comply with this warning can cause injury or death to personnel.

REMOVAL

NOTE

Rails may be shimmed; note location and quantity. Mounting hardware quantity may vary depending on mounting rail being removed. Longer bolts are used at front end of mounting rails.

Remove self-locking nuts (Figure 1, Item 1), flat washers (2), cap screws (3), and mounting rail (4).

END OF TASK

REPAIR

NOTE

Blind nuts are located at front end of both mounting rails.

Repair of mounting rails consists of replacing blind nuts (5). Refer to instructions supplied with blind nut tool.

END OF TASK

INSTALLATION

Install mounting rail (4) on trailer and loosely install cap screws (3), flat washers (2), self-locking nuts (1), then tighten.

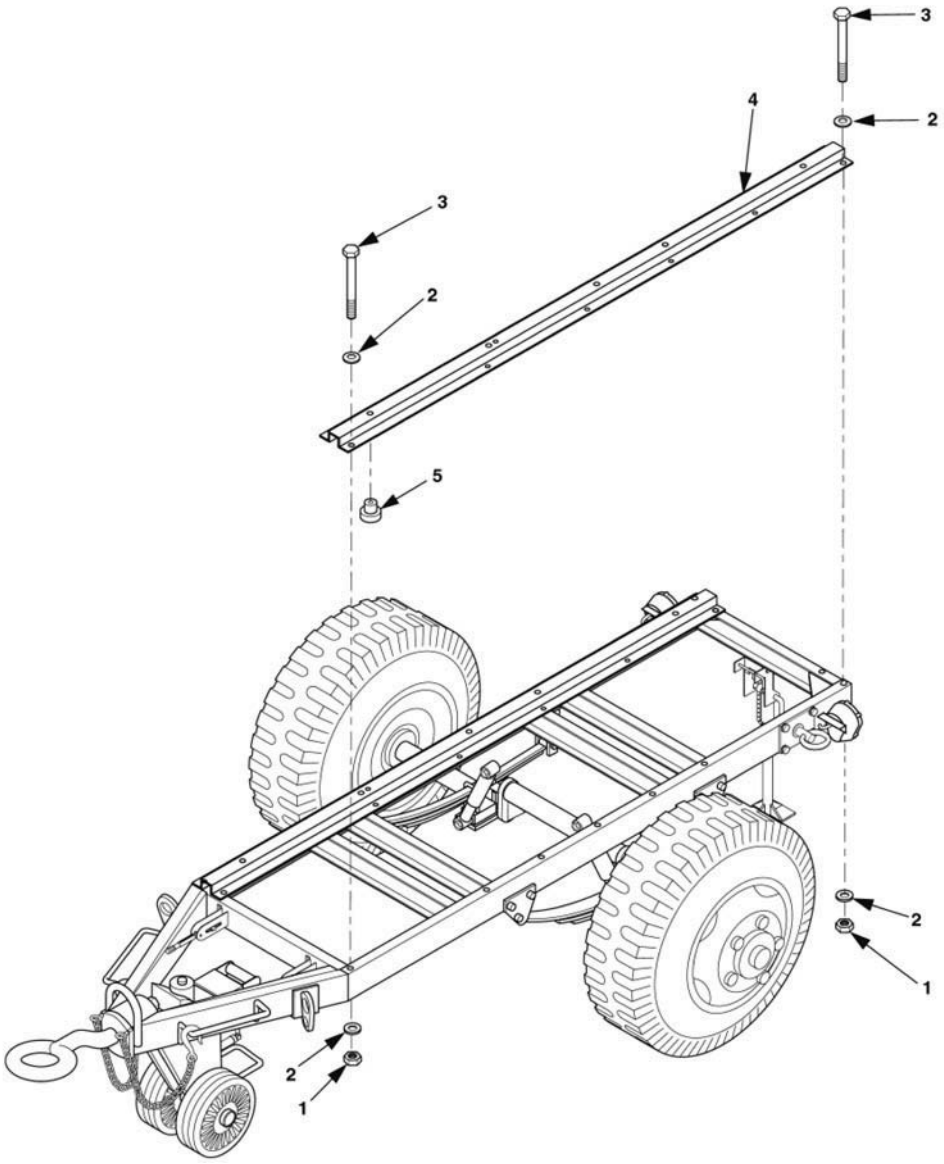

Figure 1. Replace AN/MJQ-37 and AN/MJQ-38 Generator Mounting Rails (M103A3 1½ Ton Trailer).

END OF TASK

END OF WORK PACKAGE

FIELD MAINTENANCE

10 kW 60 AND 400 Hz TRAILER-MOUNTED POWER UNITS AND POWER PLANTS

PU-798 AND PU-799 GENERATOR MOUNTING RAIL: REMOVAL, REPAIR, INSTALLATION

INITIAL SETUP:

Tools and Special Tools
Tool Kit, General Mechanic's Automotive or Standard Automotive Tool Set (WP 0101, Table 2, Item 9)

Equipment Condition
Trailer handbrakes set, front support leg/landing leg lowered, and rear leveling-support jack lowered; WP 0005, Positioning Power Plant/Power Unit.
Generator sets removed; WP 0036.
Accessory box removed; WP 0027.
Front platform removed; WP 0031.

Materials/Parts
Nuts, Self-locking
Nuts, Blind

WARNING

All metal jewelry can conduct electricity and become entangled in generator set components. Remove all jewelry when working on generator set. Failure to comply with this warning can cause injury or death to personnel.

WARNING

DO NOT wear loose clothing when performing checks, services and maintenance. Failure to comply with this warning can cause injury or death to personnel.

REMOVAL

NOTE

Rails may be shimmed; note location and quantity. Mounting hardware quantity may vary. Depending on mounting rail being removed. Longer bolts are used at front end of mounting rails.

Remove self-locking nuts (Figure 1, Item 4), flat washers (2), cap screws (1), and mounting rail (3).

END OF TASK

REPAIR

NOTE

Blind nuts are located at front end of both mounting rails.

Repair mounting rails consists of replacing blind nuts (5). Refer to instructions supplied with blind nut tool.

END OF TASK

INSTALLATION

Install mounting rail (3), cap screws (1), flat washers (2), and self-locking nuts (4).

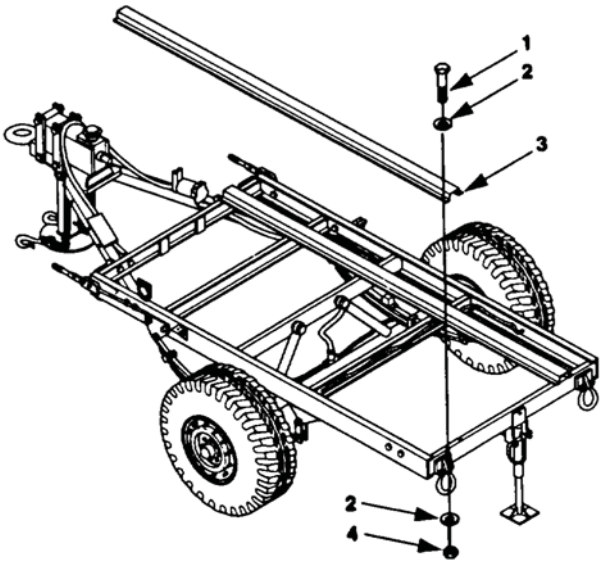

Figure 1. Replace PU-798 and PU-799 Generator Mounting Rail.

END OF TASK

END OF WORK PACKAGE

FIELD MAINTENANCE

10 kW 60 AND 400 Hz TRAILER-MOUNTED POWER UNITS AND POWER PLANTS

PU-798A AND PU-799A GENERATOR MOUNTING RAIL: REMOVAL, REPAIR, INSTALLATION

INITIAL SETUP:

Tools and Special Tools
Tool Kit, General Mechanic's Automotive or Standard Automotive Tool Set (WP 0101, Table 2, Item 9)
Rivet Gun (WP 0101, Table 2, Item 3)

Equipment Condition
Trailer handbrakes set, front support leg/landing leg lowered, and rear leveling-support jack lowered; WP 0005, Positioning Power Plant/Power Unit.
Accessory box removed; WP 0027.
Generator sets removed; WP 0036.
Center floor removed; WP 0047.

Materials/Parts
Rivets (WP 0105, Table 1, Items 2, 3, and 4)

WARNING

All metal jewelry can conduct electricity and become entangled in generator set components. Remove all jewelry when working on generator set. Failure to comply with this warning can cause injury or death to personnel.

WARNING

DO NOT wear loose clothing when performing checks, services and maintenance. Failure to comply with this warning can cause injury or death to personnel.

REMOVAL

Remove rivets (Figure 1, Items 1 and 2) and mounting rail (3) from trailer chassis (4).

END OF TASK

REPAIR

Repair of generator mounting rails consists of replacing rivets (5) and double plates (6 and 7), and rivets (8) and angle supports (9 and 10) as required. Retain double plates (6 and 7) and angle plates (9 and 10).

END OF TASK

INSTALLATION

Place mounting rail (3) on trailer chassis (4) and secure with rivets (1 and 2).

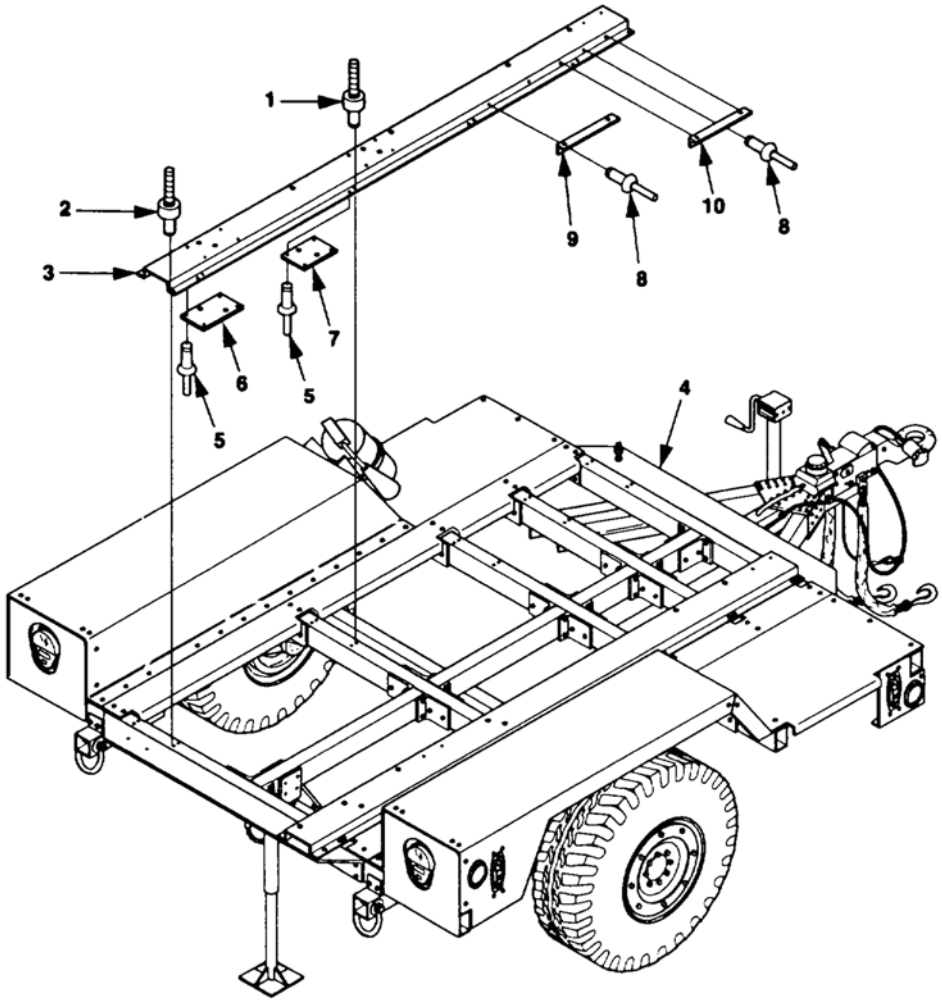

Figure 1. PU-798A and PU-799A Generator Mounting Rail Replacement.

END OF TASK

END OF WORK PACKAGE

FIELD MAINTENANCE

10 kW 60 AND 400 Hz TRAILER-MOUNTED POWER UNITS AND POWER PLANTS

LIGHT TACTICAL TRAILER REAR LEVELING-SUPPORT JACK: REMOVAL, REPAIR, INSTALLATION

INITIAL SETUP:

Tools and Special Tools
Tool Kit, General Mechanic's Automotive or Standard Automotive Tool Set (WP 0101, Table 2, Item 9)
Jack Stand (WP 0101, Table 2, Item 5)

References
TM 9-2330-202-14&P
TM 9-2330-213-14&P
TM 9-2330-392-14&P

Materials/Parts
Pin, Cotter
Pin, Spring
Fitting, Lubrication (if needed)
Grease, GAA (WP 0104, Table 1, Item 4)
Rivets (WP 0105, Table 1, Item 5)

Equipment Condition
Trailer handbrakes set and front support leg/landing leg lowered; WP 0005, Positioning Power Plant/Power Unit.
Both generator sets shut down; WP 0005, Stopping Generator Set.

WARNING

All metal jewelry can conduct electricity and become entangled in generator set components. Remove all jewelry when working on generator set. Failure to comply with this warning can cause injury or death to personnel.

WARNING

DO NOT wear loose clothing when performing checks, services and maintenance. Failure to comply with this warning can cause injury or death to personnel.

REMOVAL

WARNING

Before removing trailer leveling-support jack, support rear of trailer with jack stand(s). Failure to comply with this warning can cause severe personal injury or death.

1. Support rear of trailer with jack stands.
2. Turn leg base (Figure 1, Item 1) to take weight off leg prop.
3. Remove either one of two cotter pins (2 or 3) from pivot shaft (4) and discard cotter pin.
4. Hold leg base (1) steady and remove pivot shaft (4) with remaining cotter pin in place.
5. Lift leg base (1) slightly to take weight off retaining pin (5) and remove retaining pin. Move leg base (1) and attached parts out of bracket (7).
6. Remove three rivets (6) and bracket (7) from trailer chassis (8).

END OF TASK

REPAIR

Refer to WP 0034.

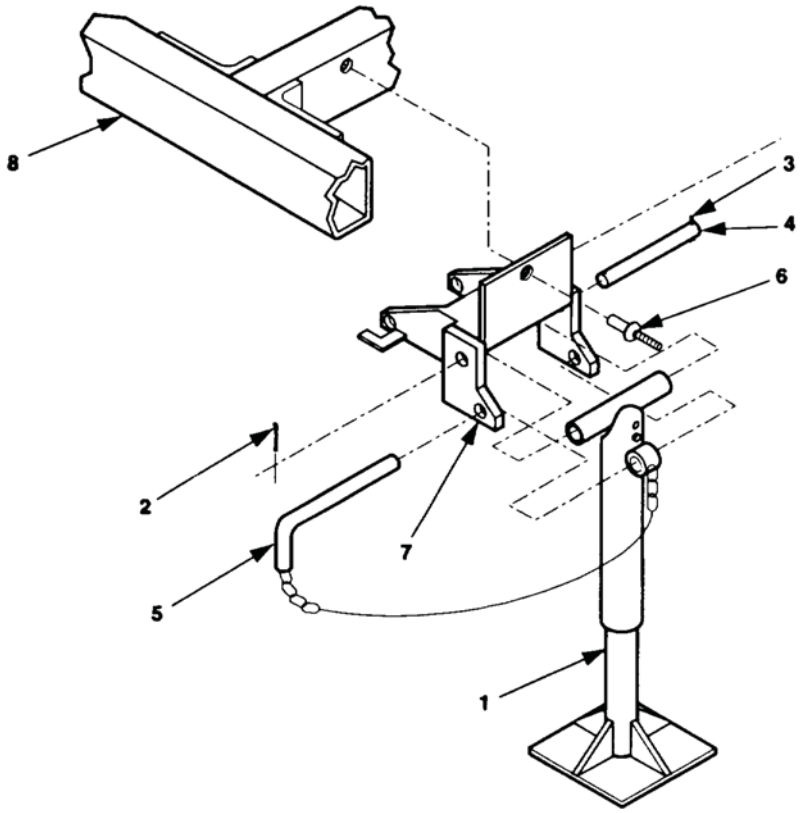

Figure 1. Rear Leveling-Support Jack Replacement; Light Tactical Trailer.

END OF TASK

INSTALLATION

1. Install bracket (7) on trailer chassis (8), with three rivets (6).
2. Position leg base (1) and attached parts in bracket (7) and install retaining pin (5).
3. Position leg base (1) and install pivot shaft (4).
4. Install new cotter pin (2 or 3) in pivot shaft (4).
5. Lube rear leveling-support jack.

END OF TASK

END OF WORK PACKAGE

FIELD MAINTENANCE

10 kW 60 AND 400 Hz TRAILER-MOUNTED POWER UNITS AND POWER PLANTS

AN/MJQ-37 AND AN/MJQ-38 TRAILER LIFTING BRACKET: REMOVAL, INSTALLATION

INITIAL SETUP:

Tools and Special Tools
Tool Kit, General Mechanic's Automotive or Standard Automotive Tool Set (WP 0101, Table 2, Item 9)
Jack Stand (WP 0101, Table 2, Item 5)

Personnel Required
Two

Equipment Condition
Trailer handbrakes set, front support leg/landing leg lowered, and rear leveling-support jack lowered; WP 0005, Positioning Power Plant/Power Unit.
Front generator set removed (if front lifting Bracket is being removed); WP 0036.
Rear generator set removed (if rear lifting Bracket is being removed); WP 0036.
Rear mounting rails removed (if rear lifting bracket is being replaced); WP 0049.
Accessory box removed (if front lifting bracket is being replaced); WP 0027.
Front mounting rails removed (if front lifting bracket is being replaced); WP 0049.

Materials/Parts
Nuts, Self-locking

References
Trailer Lifting Ring: Removal (WP 0029)
Data Plate and Reflector: Replacement (WP 0030)

WARNING

All metal jewelry can conduct electricity and become entangled in generator set components. Remove all jewelry when working on generator set. Failure to comply with this warning can cause injury or death to personnel.

WARNING

DO NOT wear loose clothing when performing checks, services and maintenance. Failure to comply with this warning can cause injury or death to personnel.

REMOVAL

1. REMOVE FRONT LIFTING BRACKET.

NOTE

If replacing front lifting bracket (2), proceed to Step a. If removing front lifting bracket, proceed to Step b.

a. Remove lifting rings (WP 0029) and retain.

WARNING

Before removing trailer leveling-support jack, support rear of trailer with jack stand(s). Failure to comply with this warning can cause severe personal injury or death.

b. Separate the power cable from front lifting bracket (2) by removing nut (Figure 1, Item 20), flat washer (19), and screw (18) from cable clamp (21).

WARNING

If trailer is not coupled to towing vehicle, ensure that wheels are securely chocked. Failure to comply with this warning can cause trailer to roll, resulting in severe personal injury and damage to equipment.

c. Release handbrakes (1).

d. Separate brake relocating brackets (4) from frame by removing two self-locking nuts (6), flat washers (5), and cap screws (3).

e. Remove ten self-locking nuts (16), flat washers (15), and cap screws (17) from front lifting bracket (2).

f. Remove three self-locking nuts (13), flat washers (14), and cap screws (12) that attach front lifting bracket (2) to top of frame.

g. Remove front lifting bracket (2).

2. REMOVE REAR LIFTING BRACKET.

NOTE

If replacing rear lifting bracket, proceed to Step a. If removing rear lifting bracket, proceed to Step b.

a. Remove lifting rings (WP 0029) and reflectors (WP 0030).

b. Separate the tail light bracket (Figure 1, Item 11) from trailer chassis by removing two self-locking nuts (8), flat washers (9), and screws (10).

c. Separate the power cable from rear lifting bracket (22) by removing nut (20), flat washer (19), and screw (18) from cable clamp (21).

d. Remove ten self-locking nuts (16), flat washers (15), and cap screws (17) from rear lifting bracket (22).

NOTE

Two sets of attaching hardware used on roadside and curbside top of bracket are removed when splash guard is removed.

e. Remove screw (12), flat washer (14), and self-locking nut (13) from inboard top hole of rear lifting bracket (22).

f. Remove rear lifting bracket (22).

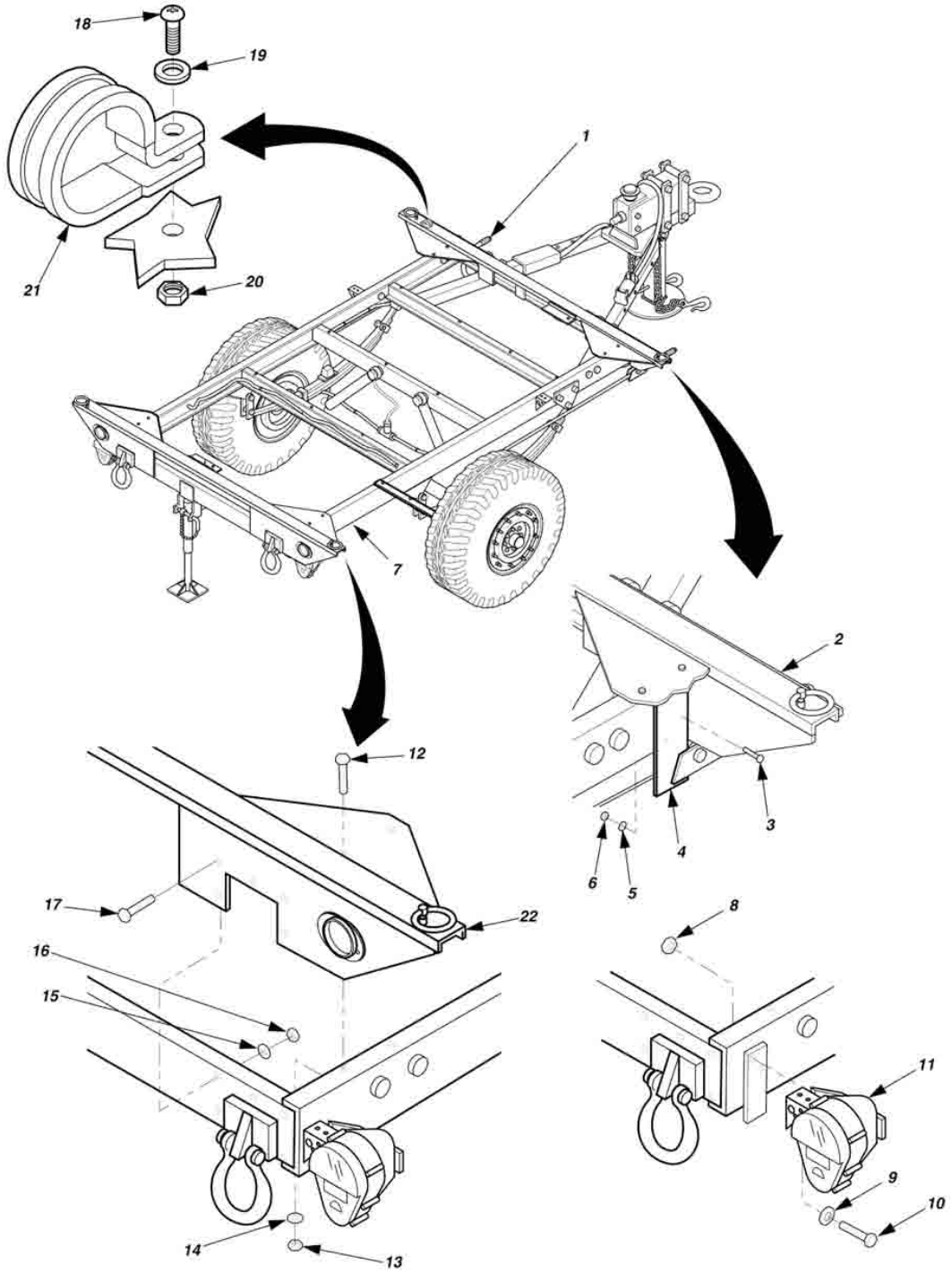

Figure 1. AN/MJQ-37 and AN/MJQ-38 Trailer Lifting Bracket.

END OF TASK

INSTALLATION

1. INSTALL FRONT LIFTING BRACKET.
   a. Position front lifting bracket (2) on trailer chassis (7).
   b. Loosely install ten cap screws (17), flat washers (15), and self-locking nuts (16) in front lifting bracket (2).
   c. Loosely install three cap screws (12), flat washers (14), and self-locking nuts (13) to attach front lifting bracket (2) to top of curbside front corner of trailer chassis (7).
   d. Install mounting rails (WP 0049).

NOTE

Loosely installed screws (12 and 17) will aid in alignment of holes in handbrake racket.

   e. Position brake relocating brackets (4), with attached handbrake lever (1), and loosely install four cap screws (3), flat washers (5), and self-locking nuts (6).
   f. Tighten all self-locking nuts installed in Steps b through e.
   g. Install front generator set (WP 0036).
   h. If front lifting bracket is a replacement, install lifting rings (WP 0029).
   i. Position Power cable clamp (21) and install screw (18), flat washer (19), and nut (20).
   j. Set trailer handbrakes and remove wheel chocks.
   k. Remove jack stands.
2. INSTALL REAR LIFTING BRACKET.
   a. Position rear lifting bracket (22) on trailer chassis (7).
   b. Loosely install ten cap screws (17), flat washers (15), and self-locking nuts (16) in rear lifting bracket (22).

NOTE

Two sets of attaching hardware used on roadside and curbside top of bracket are installed when splash guard is installed.

   c. Loosely install cap screw (10), flat washer (14), and self-locking nut (13) to attach rear lifting bracket (22) to top of trailer chassis (7).

NOTE

Loosely installed screws (12 and 17) will aid in alignment of holes in handbrake bracket.

   d. Install tail light bracket (11), two screws (10), flat washers (9), and self-locking nuts (8).
   e. Tighten all self-locking nuts installed in Steps b and c.
   f. Install rear generator set (WP 0036).
   g. If rear lifting bracket is a replacement, install lifting rings (WP 0029) and reflectors (WP 0030).
   h. Position Power cable clamp (21) and install screw (18), flat washer (19), and nut (20).

END OF TASK

END OF WORK PACKAGE

FIELD MAINTENANCE

10 kW 60 AND 400 Hz TRAILER-MOUNTED POWER UNITS AND POWER PLANTS

PREPARATION FOR STORAGE AND SHIPMENT

INITIAL SETUP:

Tools and Special Tools
Generator Mechanical Tool Kit

Materials/Parts
Preservative oil, MIL-PRF-21260
Hose
Container for preservative oil
Caps or plugs conforming to AIA/NAS 840 and/or AIA/NAS 847
Tape conforming to SAE-AMS-T-22085
Oil Filter
Fuel Filter element

Personnel Required
One (1): Power Generation Machanic (91D)

Equipment Condition
Engine Control Switch OFF

PREPARATION FOR STORAGE OR SHIPMENT

ADMINISTRATIVE STORAGE

Short-Term Storage

This type of storage is used when the equipment is expected to be stored from 1 to 45 days. The storage may be at destination after domestic shipment, or may be administrative storage when there is a shortage of maintenance manpower. For administrative storage:

1. Perform maintenance services and serviceability criteria evaluations before placing equipment in administrative storage. Correct shortcomings and deficiencies.
2. If possible, select an inside storage site. If inside storage is not available, a truck, van container, or other suitable container may be used.
3. When in administrative storage, the equipment should be capable of being made mission ready within 24 hours unless a different time frame is directed by the approving authority.
4. Additional Level A or B (PPP-G-2919) preservation and packing may be required.

Intermediate-Term Storage

This type of storage is used when the equipment is expected to be stored from 45 to 180 days. Level A or B (PPP-G-2919) preservation and packing may be required.

Long-Term Storage

This type of storage is used when the equipment is expected to be stored for more than 180 days. Level A (PPP-G-2919) preservation and packing may be required.

Storage for Periods Less Than 9 Months

Start generator set every month and operate for a minimum of 15 minutes or until engine reaches normal operating temperature

For Periods Longer Than 9 Months Up to 36 Months

1. Completely read storage and preservation instructions that follow prior to performing them to avoid unnecessary steps.
2. Operate generator set at 80% load for 1/2 hour. Perform PMCS inspections and verify generator set is fully mission capable.
3. Drain engine oil and refill engine crankcase with preservative lubricating oil conforming to grade 10, 30, or 15-40 of MIL-PRF 21260. Remove engine oil filter and replace with new filter.
4. Locate a container capable of supplying oil to the engine fuel supply lines. Fill container with preservative oil, MIL-PRF-21260, Grade PEI 0, and position container next to the fuel tank suction lines. Drain diesel fuel from the fuel filters and supply lines between the engine and the fuel tank. Replace fuel filter elements. Disconnect the engine fuel supply line at a convenient point close to the fuel tank and connect a flexible line from the container of preservative oil to the engine fuel supply line. Start the engine and operate at its normal rated speed, for the time deemed necessary to ensure that the preservative oils have reached all internal engine components and all the fuel injection system components. This should be between 4 to 7 minutes.
5. Allow engine to cool to less than 100 degrees F. Install plate in air intake system that fully blocks air flow into the engine. With preservative oil supply line still connected crank the engine without starting for 10 seconds. Disconnect preservative oil supply line and reconnect engine fuel lines.
6. Remove batteries from generator, clean dirt, acid and other residues from top of batteries, and check voltage. Charge the batteries if the voltage is less than 12.7 volts for the Optima AGM batteries. Charge the batteries if the voltage is less than 12.5 volts for the flooded wet cell batteries. Store the batteries in a location where they can be charged. Charge wet-cell batteries every 3 months and Optima batteries every 6 months. Charge the Optima batteries with a charger with an AGM setting or that regulates the voltage between 14.25 and 14.75 volts.
7. Drain the Fuel tank.
8. Service cooling system and test antifreeze for proper concentration and temperature rating for anticipated storage temperatures. Drain and replace coolant if normal scheduled Coolant replacement will occur during the storage period.
9. Drain oil from engine. Reinstall drain plug.
10. Upon completion of engine preservation, all openings into the engine such as crankcase breathers, oil filter caps, valve cover breather holes, oil level dipstick/tube, and openings into accessories, shall be sealed with plastic caps or plugs conforming to AIA/NAS 840 and/or AIA/NAS 847, or with tape conforming to SAE-AMS-T-22085.
11. Attach warning tags to the oil dipstick and the control panel start switch stating that: "The generator set has been preserved. Change fuel filters, fill engine with oil and perform PMCS before starting."
12. Close all access doors and lock. Store generator set under roof, or inside if available. Do not store under tarp for long periods unless there is significant air flow under tarp and at least 3 feet of space between tarp and generator set.

Preparation for Shipment

Prepare for shipment in accordance with applicable DOD and commercial transportation rules, regulations and procedures. Refer to Defense Travel Regulations, DOD 4500.9-R, Part II, Cargo Movement and TM 38-250, Preparing Hazardous Materials for Military Air Shipments.

END OF TASK

END OF WORK PACKAGE

FIELD MAINTENANCE

10 kW 60 AND 400 Hz TRAILER-MOUNTED POWER UNITS AND POWER PLANTS

ILLUSTRATED LIST OF MANUFACTURED ITEMS INTRODUCTION

ILLUSTRATED LIST OF MANUFACTURED ITEMS INTRODUCTION

Scope

WP 0056 through WP 0062 includes complete instructions for making items authorized to be manufactured or fabricated at the maintenance level.

How to Use the Index of Manufactured Items

A part number index in alphanumeric order is provided for cross-referencing the part number of the item to be manufactured to the information which covers fabrication criteria.

Explanation of the Illustrations of Manufactured Items

All instructions needed by maintenance personnel to manufacture the item are included on the illustrations. All bulk materials needed for manufacture of an item are listed by part number or specification number in a tabular list on the illustration.

INDEX OF MANUFACTURED ITEMS

P/N AND/OR DWG NO	PART DESCRIPTION	REFERENCE
13229E5828	Electrical Leads W3, W4, W5, W6, W7, and W8	WP 0056
13229E5829	Relay Board Harness Assembly W11	WP 0057
13229E5831	Switch Box Harness Assembly W9	WP 0058
13229E5832	Output Connector Harness Assembly W10	WP 0059
13230E6795	Cable Assembly W1 and W2	WP 0060
22806-000-00	Deck Covering	WP 0061
2B2B2C1F2	Switch Box Gasket	WP 0062

END OF WORK PACKAGE

FIELD MAINTENANCE

10 kW 60 AND 400 Hz TRAILER-MOUNTED POWER UNITS AND POWER PLANTS

ELECTRICAL LEADS W3, W4, W5, W6, W7, AND W8

P/N 13229E5828

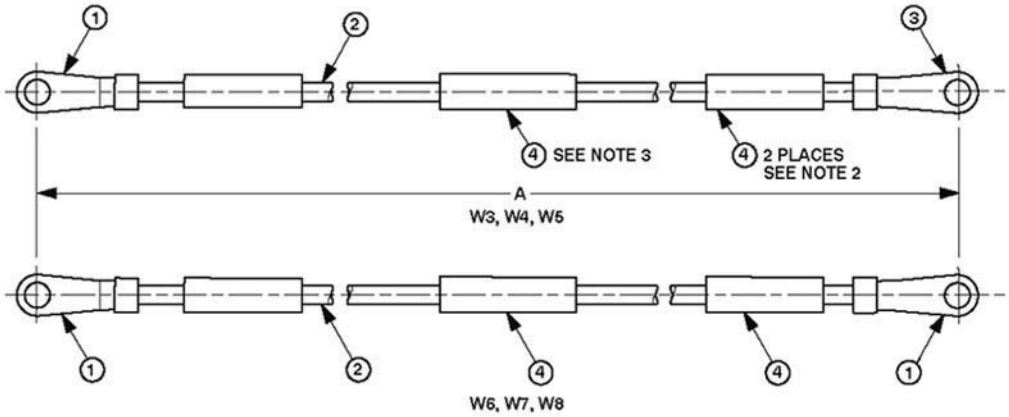

NOTES:

1. CRIMPED CONNECTIONS SHALL BE IN ACCORDANCE WITH MIL-STD-454, REQUIREMENT 19.
2. HOT STAMP LEGEND A, INDICATED IN TABULATION, USING .09-.16 HIGH BLACK CHARACTERS, IN TWO PLACES (180° APART) ON INSULATION SLEEVING, FIND NO. 4, IN ACCORDANCE WITH MIL-M-60903, WITHIN 2.50 INCHES OF TERMINAL LUG.
3. HOT STAMP LEGEND B, INDICATED IN TABULATION, AND "97403-13229E5828-" WITH APPROPRIATE DASH NUMBER 2 ON INSULATION, FIND NO. 4, IN ACCORDANCE WITH MIL-M-60903. LOCATE APPROXIMATELY AT CENTER OF LEAD.

Figure 1. Electrical Leads W3, W4, W5, W6, W7, and W8 (Sheet 1 of 2).

DIMENSIONS			
DASH NO.	DIMENSION A +/- 0.50	MARKING	
		LEGEND A	LEGEND B
-1	16.00	K1-A1 - L1	W3
-2	18.00	K1-B1 - L2	W4
-3	23.00	K1-C1 - L3	W5
-4	12.00	K1-C1 - K2-C1	W6
-5	12.00	K1-B1 - K2-B1	W7
-6	12.00	K1-A1 - K2-A1	W8

PARTS LIST									
FIND NO.	PART NO.	QUANTITY REQUIRED						DESCRIPTION	SPECIFICATION
		-1	-2	-3	-4	-5	-6		
1	MS25036-125	1	1	1	2	2	2	TERMINAL LUG, 4 AWG, .375 STUD SIZE	
2	M5086/2-4-9	AR	AR	AR	AR	AR	AR	WIRE, ELECTRICAL, 4 AWG, WHT	MIL-W-5086/2
3	MS20659-145	1	1	1	-	-	-	TERMINAL LUG, 4 AWG, .500 STUD SIZE	
4	M23053/5-108-4	3	3	3	3	3	3	INSULATION SLEEVING, HEAT SHRINKABLE, .50 ID AS SUPPLIED X 2.50 LONG	MIL-I-28053/5

Figure 1. Electrical Leads W3, W4, W5, W6, W7, and W8 (Sheet 2 of 2).

END OF TASK

END OF WORK PACKAGE

FIELD MAINTENANCE

10 kW 60 AND 400 Hz TRAILER-MOUNTED POWER UNITS AND POWER PLANTS

RELAY BOARD HARNESS ASSEMBLY W11

P/N 13229E5829

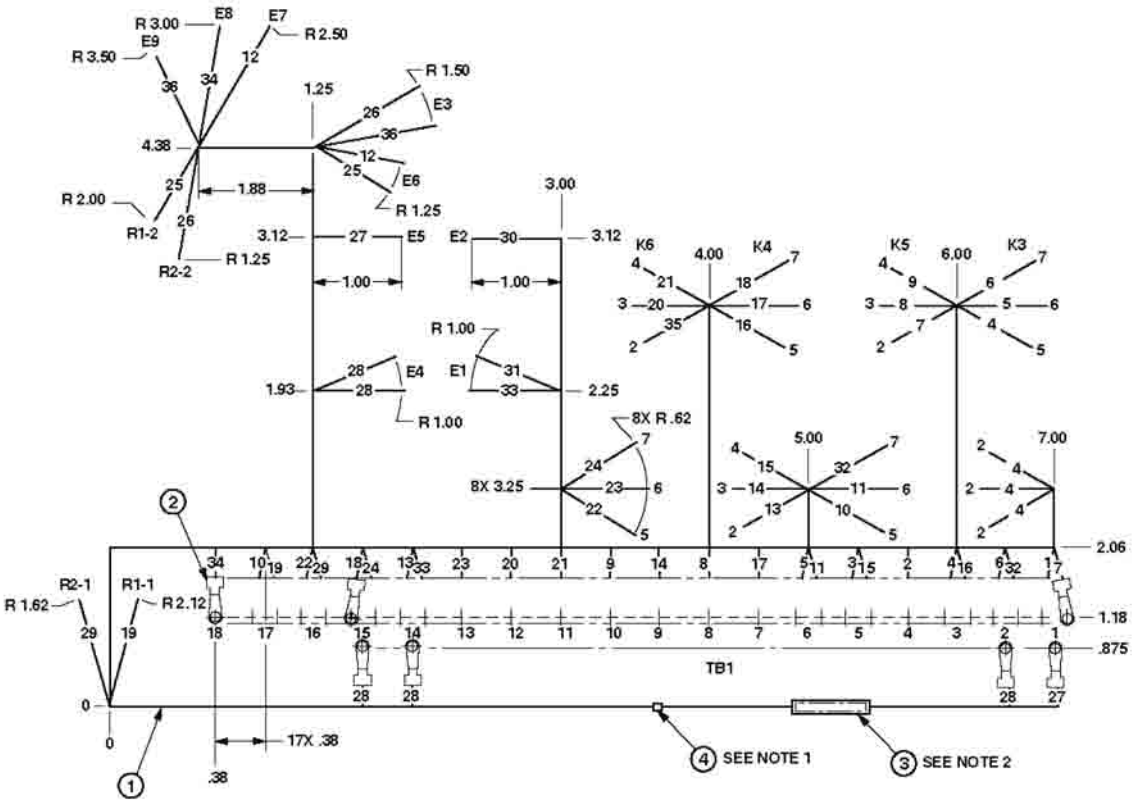

PARTS LIST				
FIND NO.	PART NO.	QUANTITY REQUIRED	DESCRIPTION	SPECIFICATION
1	M22759/16-20-9	AR	WIRE, ELECTRICAL, 20 AWG, WHITE	SAE-AS22759/16
2	MS25036-101	31	TERMINAL LUG, CRIMP STYLE, INSULATED, 22-18 TERMINAL SIZE, .138 STUD SIZE	
3	M23053/5-107-4	1	INSULATION SLEEVING, .375 ID X 1.50 L	SAE-AMS-25053/2
4	MS3367-4-9	AR	STRAP, TIEDOWN	
5	Sn60Pb40	AR	SOLDER	J-STD-004/5/6
6	M23053/5-105-4	70	INSULATION SLEEVING, .187 ID X 1.50 L	SAE-AMS-25053/2

Figure 1. Relay Board Harness Assembly W11 (Sheet 1 of 2).

NOTES:

1. BUNDLE WIRE HARNESS AT EACH BREAKOUT AND AT 3.00 MAX INTERVALS USING TIEDOWN STRAP, FIND NO.4.
2. HOT STAMP "97403-13229E5829" IN ACCORDANCE WITH MIL-M-60903 ON SLEEVING FIND NO. 3.
3. EACH WIRE SHALL BE IDENTIFIED BY HOT STAMPING ADDRESS DESIGNATIONS USING .09-.16 HIGH BLACK CHARACTERS ON INSULATION SLEEVING, FIND NO.6, IN ACCORDANCE WITH MIL-M-60903. ATTACH WITHIN TWO INCHES OF BOTH END TERMINATIONS. APPROPRIATE ADDRESS SHALL CONSIST OF THE FROM TERMINATION, A DOUBLE HEADED ARROW AND THE TO TERMINATION.
4. STRIP AND TIN WIRES IN ACCORDANCE WITH MIL-STD-2000, USING SOLDER, FIND NO. 5.
5. CRIMPED CONNECTIONS SHALL BE IN ACCORDANCE WITH MIL-STD-454, REQUIREMENT 19.

WIRE LIST

WIRE NO.	TERMINATION		TERMINATION		WIRE FIND NO.
	FROM	FIND NO.	TO	FIND NO.	
1	XK3-2		TB1-1	2	1
2	XK3-3		TB1-6	2	1
3	XK3-4		TB1-5	2	1
4	XK3-5		TB1-3	2	1
5	XK3-6		TB1-4	2	1
6	XK3-7		TB1-2	2	1
7	XK5-2		TB1-1	2	1
8	XK5-3		TB1-8	2	1
9	XK5-4		TB1-10	2	1
10	XK5-5		TB1-17	2	1
11	XK5-6		TB1-6	2	1
12	E-7		E-6		1
13	XK4-2		TB1-14	2	1
14	XK4-3		TB1-9	2	1
15	XK4-4		TB1-5	2	1
16	XK4-5		TB1-3	2	1
17	XK4-6		TB1-7	2	1
18	XK4-7		TB1-15	2	1

WIRE NO.	TERMINATION		TERMINATION		WIRE FIND NO.
	FROM	FIND NO.	TO	FIND NO.	
19	R1-1		TB1-17	2	1
20	XK6-3		TB1-12	2	1
21	XK6-4		TB1-11	2	1
22	XK6-5		TB1-16	2	1
23	XK6-6		TB1-13	2	1
24	XK6-7		TB1-15		1
25	R1-2		E-6		1
26	R2-2		E-3	2	1
27	E-5		TB1-1	2	1
28	E-4		TB1-2	2	1
29	R2-1		TB1-16	2	1
30	E-2		TB1-15	2	1
31	E-1		E-4		1
32	XK5-7		TB1-2	2	1
33	E-1		TB1-14	2	1
34	E-8		TB1-18	2	1
35	XK6-2		TB1-14	2	1
36	E-9		E-3	2	1

Figure 1. Relay Board Harness Assembly W11 (Sheet 2 of 2).

END OF TASK

END OF WORK PACKAGE

FIELD MAINTENANCE

10 kW 60 AND 400 Hz TRAILER-MOUNTED POWER UNITS AND POWER PLANTS

SWITCH BOX HARNESS ASSEMBLY W9

P/N 13229E5831

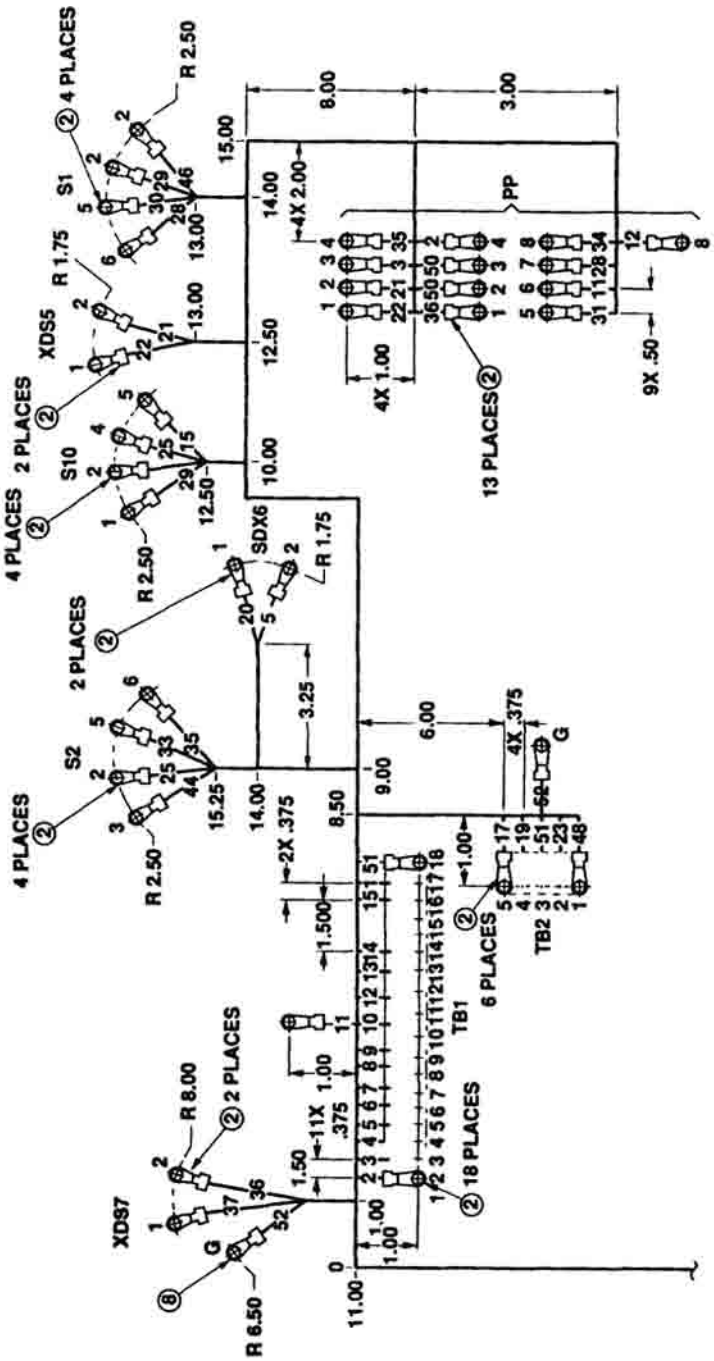

Figure 1. Switch Box Harness Assembly W9 (Sheet 1 of 4).

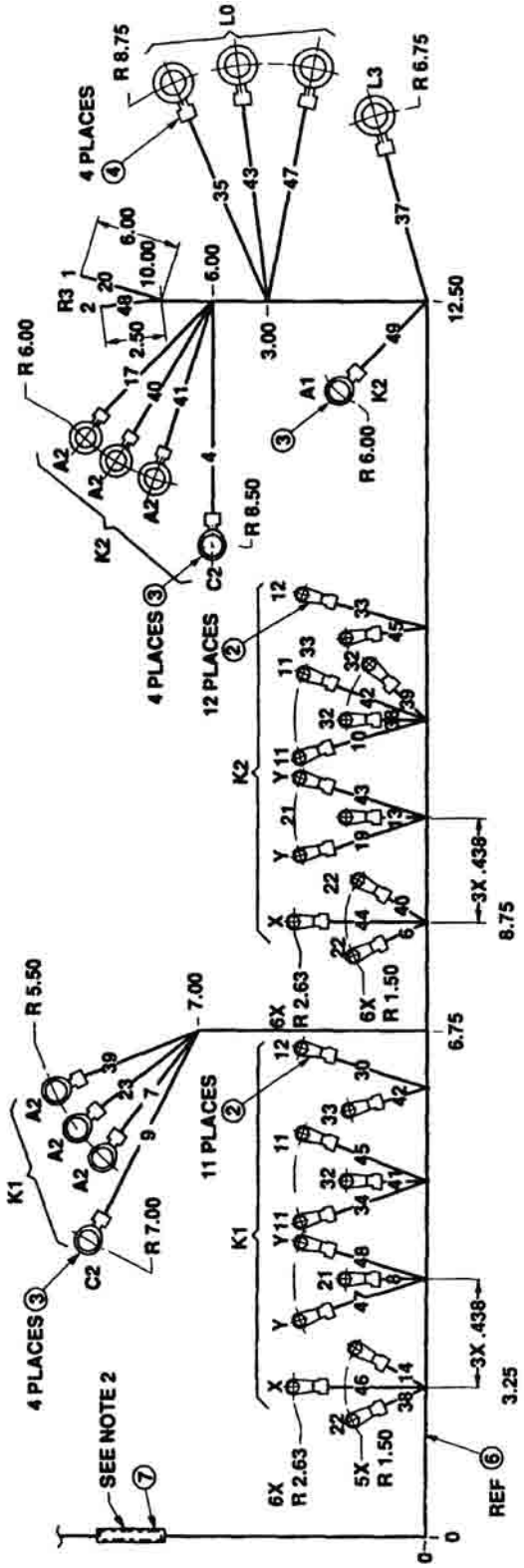

Figure 1. Switch Box Harness Assembly W9 (Sheet 2 of 4).

PARTS LIST				
FIND NO.	PART NO.	QUANTITY REQUIRED	DESCRIPTION	SPECIFICATION
1	M22759/16-16-9	AR	WIRE, ELECTRICAL, 16 AWG, WHITE	SAE-AS22759/16
2	MS25036-106	70	TERMINAL LUG, CRIMP STYLE, INSULATED, 16-14 AWG TERMINAL SIZE, .138 STUD SIZE	
3	MS25036-110	9	TERMINAL LUG, CRIMP STYLE, INSULATED, 16-14 AWG TERMINAL SIZE, .375 STUD SIZE	
4	MS25036-155	4	TERMINAL LUG, CRIMP STYLE, INSULATED, 16-14 AWG TERMINAL SIZE, .500 STUD SIZE	
5	Sn60Pb40	AR	SOLDER	J-STD-004/5/6
6	MS3367-4-9	AR	STRAP, TIEDOWN	
7	M23053/5-107-4	1	INSULATION SLEEVING, .375 ID X 1.50 L	SAE-AMS-23053/2
8	MS25036-108	1	TERMINAL LUG, CRIMP STYLE, INSULATED, 16-14 AWG TERMINAL SIZE, .190 STUD SIZE	
9	MS23053/5-105-4	104	INSULATION SLEEVING, .187 ID X 1.50 AS REQUIRED	SAE-AMS-23053/2
10	13230E6313-3	1	TUBING, PLASTIC, SPIRAL WRAP (10.00 L)	

NOTES:

1. BUNDLE WIRE HARNESS AT EACH BREAKOUT AND AT 3.00 MAX INTERVALS USING TIEDOWN STRAP, FIND NO.6.
2. HOT STAMP "97403-13229E5831" IN ACCORDANCE WITH MIL-M-60903 ON SLEEVING FIND NO. 3.
3. EACH WIRE SHALL BE IDENTIFIED BY HOT STAMPING ADDRESS DESIGNATIONS USING .09-.16 HIGH BLACK CHARACTERS ON INSULATION SLEEVING, FIND NO.9, IN ACCORDANCE WITH MIL-M-60903. ATTACH WITHIN TWO INCHES OF BOTH END TERMINATIONS. APPROPRIATE ADDRESS SHALL CONSIST OF THE FROM TERMINATION, A DOUBLE HEADED ARROW AND THE TO TERMINATION.
4. STRIP AND TIN WIRES IN ACCORDANCE WITH MIL-STD-2000, USING SOLDER, FIND NO. 5.
5. CRIMPED CONNECTIONS SHALL BE IN ACCORDANCE WITH MIL-STD-454, REQUIREMENT 19.

Figure 1. Switch Box Harness Assembly W9 (Sheet 3 of 4).

WIRE LIST

WIRE NO.	TERMINATION FROM	TERMINATION FIND NO.	TERMINATION TO	TERMINATION FIND NO.	WIRE FIND NO.
1	TB1-17	2	S10-2	2	1
2	TB1-2	2	PP-4	2	1
3	TB1-3	2	PP-3	2	1
4	TB1-4	2	K2-A2	3	1
5	TB1-5	2	XDS6-2	N/A	1
6	TB1-6	2	K2-22	2	1
7	TB1-7	2	K1-A2	3	1
8	TB1-8	2	K1-21	2	1
9	TB1-9	2	K1-C2	3	1
10	TB1-10	2	K2-11	2	1
11	TB1-10	2	PP-6	2	1
12	TB1-11	2	PP-8	2	1
13	TB1-12	2	K2-21	2	1
14	TB1-13	2	K1-22	2	1
15	TB1-16	2	S10-5	2	1
16	N/A	N/A	N/A	N/A	N/A
17	TB2-5	N/A	K2-C2	3	1
18	N/A	N/A	N/A	N/A	N/A
19	TB2-4	2	K2-Y	2	1
20	XDS6-1	N/A	R3-1	N/A	1
21	XDS5-2	N/A	PP-2	2	1
22	XDS5-1	N/A	PP-2	2	1
23	TB2-2	2	K1-C2	3	1
24	N/A	N/A	N/A	N/A	N/A
25	S2-2	2	S10-4	2	1
26	N/A	N/A	N/A	N/A	N/A
27	N/A	N/A	N/A	N/A	N/A

WIRE NO.	TERMINATION FROM	TERMINATION FIND NO.	TERMINATION TO	TERMINATION FIND NO.	WIRE FIND NO.
28	S1-6	2	PP-7	2	1
29	S1-2	2	S10-1	2	1
30	S1-5	2	K1-12	2	1
31	S2-6	2	PP-5	2	1
32	N/A	N/A	N/A	N/A	N/A
33	S2-5	2	K2-12	2	1
34	K1-11	2	PP-8	2	1
35	PP-4	2	L0	4	1
36	XDS7-2	N/A	PP-1	2	1
37	XDS7-1	N/A	L3	2	1
38	K1-22	2	K2-32	2	1
39	K2-32	2	K1-C2	3	1
40	K2-22	2	K2-C2	3	1
41	K1-32	2	K2-C2	3	1
42	K1-33	2	K2-11	2	1
43	K2-Y	2	L0	4	1
44	K2-X	2	S2-3	2	1
45	K2-33	2	K1-11	2	1
46	K1-X	2	S1-3	2	1
47	K1-Y	2	L0	4	1
48	K1-Y	2	TB2-1	2	1
49	K2-A1	3	R3-2	N/A	1
50	PP-2	2	PP-3	2	1
51	TB1-18	2	TB2-3	2	1
52	G	8	TB2-3	2	1
53	XDS1-2	4	TB2-3	2	1
N/A	N/A	N/A	N/A	N/A	N/A

Figure 1. Switch Box Harness Assembly W9 (Sheet 4 of 4).

END OF TASK

END OF WORK PACKAGE

FIELD MAINTENANCE

10 kW 60 AND 400 Hz TRAILER-MOUNTED POWER UNITS AND POWER PLANTS

OUTPUT CONNECTOR HARNESS ASSEMBLY W10

P/N 13229E5832

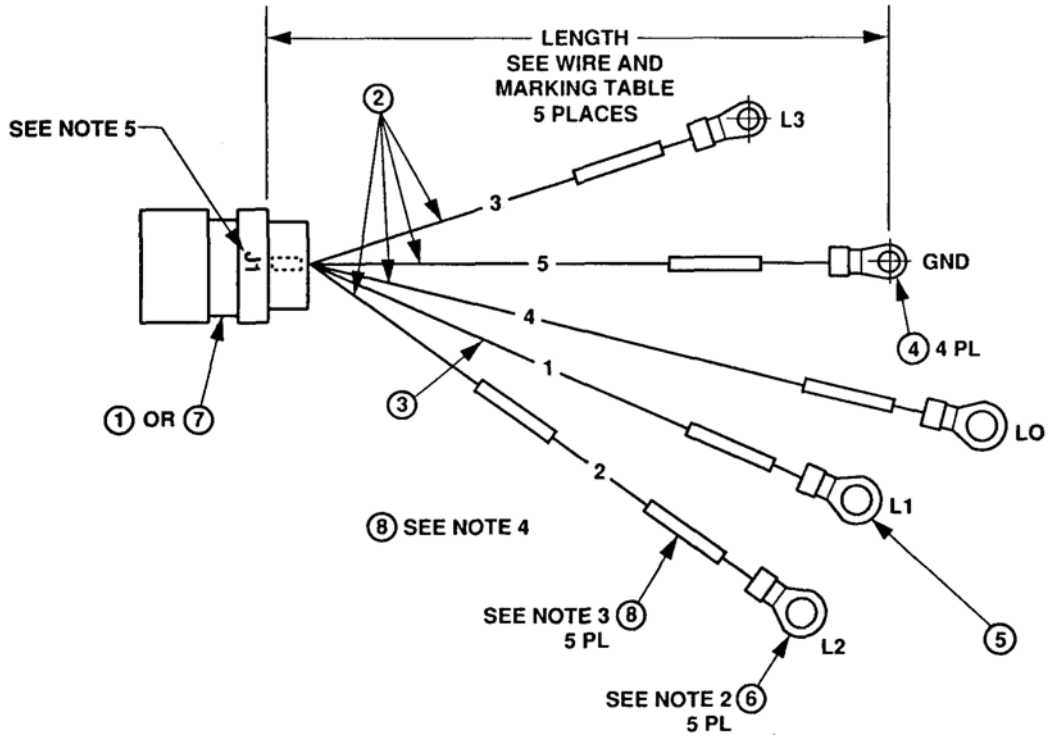

NOTES:

1. CRIMP CONNECTIONS SHALL BE IN ACCORDANCE WITH MIL-STD-454, REQUIREMENT 19.
2. INSTALL INSULATION SLEEVING, FIND NO. 7, OVER TERMINALS, FIND NO. 4 AND 5, AND HEAT SHRINK TO A FIRM FIT.
3. HOT STAMP EACH WIRE, WITHIN 2.40 +/- .12 OF TERMINAL, WITH MARKINGS SPECIFIED IN TABULATION. MARKINGS SHALL BE IN ACCORDANCE WITH MIL-M-60903, ON SLEEVING, FIND NO. 8.
4. HOT STAMP "W10" AND "97403-13229E5832-" WITH APPROPRIATE DASH NO. IN ACCORDANCE WITH MIL-M-60903, ON SLEEVING, FIND NO. 8. APPLY SINGLE MARKING APPROXIMATELY CENTERED ON ANY ONE WIRE.
5. MARK REFERENCE DESIGNATION IN .12 MIN. HIGH CHARACTERS IN ACCORDANCE WITH MIL-STD-130, METHOD OPTIONAL.

Figure 1. Output Connector Harness Assembly W10 (Sheet 1 of 2).

PARTS LIST					
		QUANTITY REQUIRED			
		-1	-2		
FIND NO.	PART NO.	60 Hz SYSTEMS	400 Hz SYSTEMS	DESCRIPTION	SPECIFICATION
1	MS90555C32413S	1	N/A	CONNECTOR, RECEPTACLE ELECTRICAL	
2	M5086/2-4-9	AR	AR	WIRE, ELECTRICAL, 4 AWG	SAE-AS50861/2
3	M5086/2-6-9	AR	AR	WIRE, ELECTRICAL, 6 AWG	SAE-AS50861/2
4	MS20659-145	4	4	TERMINAL, 4 AWG, .50 STUD SIZE	
5	MS20659-143	1	1	TERMINAL, 6 AWG, .50 STUD SIZE	
6	M23053/5-108-9	5	5	INSULATION SLEEVING, HEAT SHRINKABLE, .50 MIN ID AS SUPPLIED, 1.00 L	SAE-AMS-I-23053/2
7	MS90555C32413SY	N/A	1	CONNECTOR, RECEPTACLE ELECTRICAL	
8	M23053/5-108-4	6	6	INSULATION SLEEVING, HEAT SHRINKABLE, .50 MIN ID AS SUPPLIED, L AS REQUIRED	SAE-AMS-I-23053/2

WIRING AND MARKING TABLE			
WIRE NO.	FROM	MARKING	LENGTH +.50 -.00
1	J1-A	L1	19.00
2	J1-B	L2	19.00
3	J1-C	L3	21.00
4	J1-D	L0	21.00
5	J1-E	GND	25.00

Figure 1. Output Connector Harness Assembly W10 (Sheet 2 of 2).

END OF TASK

END OF WORK PACKAGE

FIELD MAINTENANCE

10 kW 60 AND 400 Hz TRAILER-MOUNTED POWER UNITS AND POWER PLANTS

CABLE ASSEMBLY W1 AND W2

P/N 13230E6795

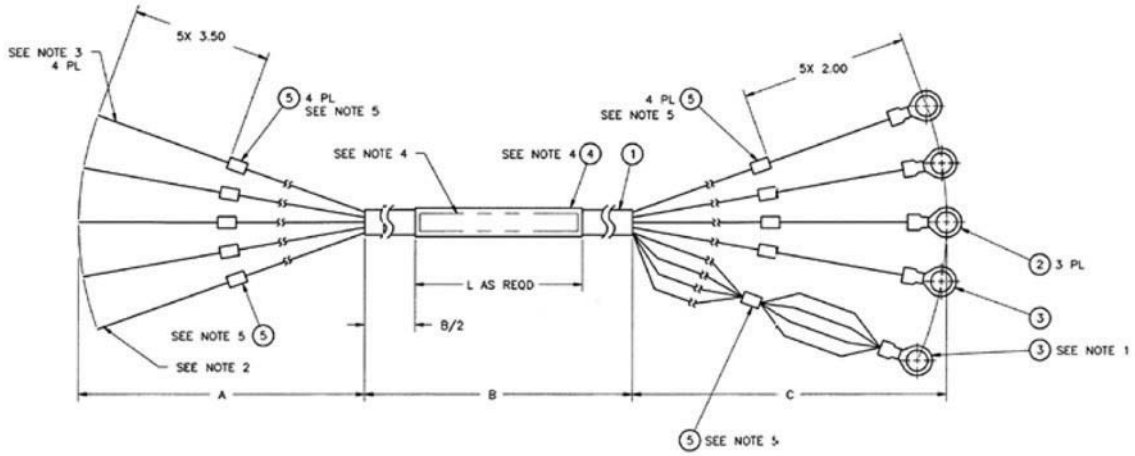

PARTS LIST				
FIND NO.	PART NO.	QUANTITY REQUIRED	DESCRIPTION	SPECIFICATION
1	13230E6407-3	AR	CABLE, POWER	MIL-C-3432
2	95-8162-42	3	TERMINAL LUG, 4 AWG, .375 STUD SIZE	
3	13229E5706-10	2	TERMINAL LUG, 4 AWG, .500 STUD SIZE	
4	88-20541-22	1	INSULATION SLEEVING, HEAT SHRINKABLE, BLK	SAE-AMS-I-23053/2
5	88-20541-16	10	INSULATION SLEEVING, HEAT SHRINKABLE, WHT	SAE-AMS-I-23053/2

NOTES:

1. REMOVE BRAID FROM FOUR GROUND WIRES (12 AWG). TWIST TOGETHER AND INSTALL TERMINAL LUG, FIND NO. 3, AS SHOWN. TERMINAL SHALL BE INSTALLED IN ACCORDANCE WITH MIL-STD-454, REQUIREMENT 19.
2. AT PIGTAIL END OF CABLE, THE FOUR 12 AWG GROUNDING CONDUCTORS SHALL BE TWISTED TOGETHER, STARTING AT THE JACKET. STRIP AND TIN WIRES IN ACCORDANCE WITH MIL-STD-2000, USING SOLDER.
3. AT PIGTAIL END OF CABLE, STRIP AND TIN WIRES IN ACCORDANCE WITH MIL-STD-2000, USING SOLDER.
4. INSULATION COLORS, IN ACCORDANCE WITH WIRE LIST, SHALL BE INCLUDED AS PART OF THE ORDERING DATA.
5. HOT STAMP "97403-13230E6795" WITH APPROPRIATE DASH NO., AND "W-" IN .23-.39 HIGH CHARACTERS ON INSULATION SLEEVING, FIND NO. 4 IN ACCORDANCE WITH MIL-M-60903.
6. HOT STAMP WITH TERMINAL DESIGNATION. AS SHOWN ON WIRE LIST. USING .12-.22 HIGH CHARACTERS, IN TWO PLACES APPROXIMATELY 180° APART ON INSULATION SLEEVING, FIND NO. 5, IN ACCORDANCE WITH MIL-M-60903.

Figure 1. Cable Assembly W1 and W2 (Sheet 1 of 2).

WIRE LIST AN/MJQ-37 AND AN/MJQ-38 - 60 AND 400 Hz

DASH NO.	WIRE COLOR	TERMINATION		TERMINATION		WIRE FIND NO.	DIMENSION			CABLE REF DES
		FROM	FIND NO.	TO	FIND NO.		A	B	C	
-1	BLACK	G1-L1	-	K1-A2	2	1	23.50	36.00	8.00	W1
	RED	G1-L2	-	K1-B2	2	1	19.50	36.00	8.00	
	BLUE	G1-L3	-	K1-C2	2	1	15.50	36.00	8.00	
	WHITE	G1-N	-	N	3	1	17.50	36.00	18.00	
	GREEN	G1-GND	-	GND	3	1	17.50	36.00	18.00	
	GREEN	G1-GND	-	GND	3	1	17.50	36.00	18.00	
	GREEN	G1-GND	-	GND	3	1	17.50	36.00	18.00	
	GREEN	G1-GND	-	GND	3	1	17.50	36.00	18.00	
-2	BLACK	G2-L1	-	K2-A2	2	1	23.50	85.00	3.50	W2
	RED	G2-L2	-	K2-B2	2	1	19.50	85.00	3.00	
	BLUE	G2-L3	-	K2-C2	2	1	15.50	85.00	3.50	
	WHITE	G2-N	-	N	3	1	17.50	85.00	13.00	
	GREEN	G2-GND	-	GND	3	1	17.50	85.00	13.00	
	GREEN	G2-GND	-	GND	3	1	17.50	85.00	13.00	
	GREEN	G2-GND	-	GND	3	1	17.50	85.00	13.00	
	GREEN	G2-GND	-	GND	3	1	17.50	85.00	13.00	
-3	BLACK	G2-L1	-	K2-A2	2	1	23.50	180.00	3.50	W2
	RED	G2-L2	-	K2-B2	2	1	19.50	180.00	3.00	
	BLUE	G2-L3	-	K2-C2	2	1	15.50	180.00	3.50	
	WHITE	G2-N	-	N	3	1	17.50	180.00	13.00	
	GREEN	G2-GND	-	GND	3	1	17.50	180.00	13.00	
	GREEN	G2-GND	-	GND	3	1	17.50	180.00	13.00	
	GREEN	G2-GND	-	GND	3	1	17.50	180.00	13.00	
	GREEN	G2-GND	-	GND	3	1	17.50	180.00	13.00	
-4	BLACK	G1-L1	-	K1-A2	2	1	23.50	85.00	8.00	W1
	RED	G1-L2	-	K1-B2	2	1	19.50	85.00	8.00	
	BLUE	G1-L3	-	K1-C2	2	1	15.50	85.00	8.00	
	WHITE	G1-N	-	N	3	1	17.50	85.00	18.00	
	GREEN	G1-GND	-	GND	3	1	17.50	85.00	18.00	
	GREEN	G1-GND	-	GND	3	1	17.50	85.00	18.00	
	GREEN	G1-GND	-	GND	3	1	17.50	85.00	18.00	
	GREEN	G1-GND	-	GND	3	1	17.50	85.00	18.00	

Figure 1. Cable Assembly W1 and W2 (Sheet 2 of 2).

END OF TASK

END OF WORK PACKAGE

FIELD MAINTENANCE

10 kW 60 AND 400 Hz TRAILER-MOUNTED POWER UNITS AND POWER PLANTS

DECK COVERING

P/N 22806-000-00

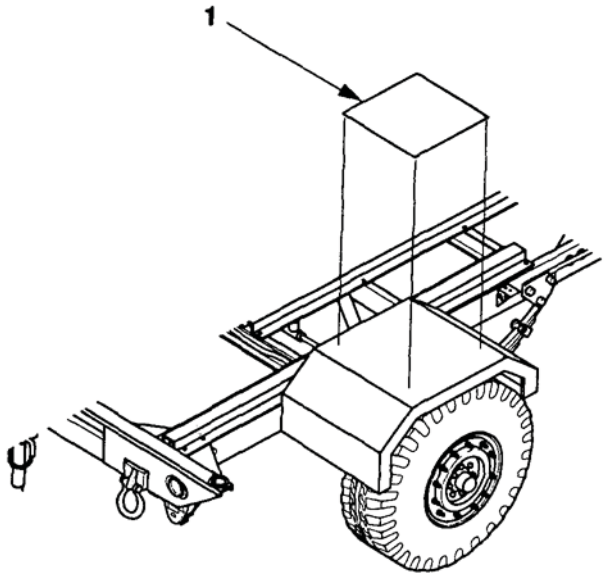

NOTES:

1. REMOVE OLD DECK COVERING AND CLEAN AREA.
2. CUT DECK COVERING MATERIAL (1) TO DESIRED LENGTH.
3. REMOVE PROTECTIVE COVER FROM PRESSURE-SENSITIVE ADHESIVE BACKING AND APPLY TO AREA TO BE COVERED.

PARTS LIST

FIND NO.	PART NO.	QUANTITY REQUIRED	DESCRIPTION	SPECIFICATION
1	22806-000-00	AR	DECK COVERING, LIGHTWEIGHT, NONSLIP	MIL-D-17951E

Figure 1. Deck Covering.

END OF TASK

END OF WORK PACKAGE

FIELD MAINTENANCE

10 kW 60 AND 400 Hz TRAILER-MOUNTED POWER UNITS AND POWER PLANTS

SWITCH BOX GASKET

P/N 2B2B2C1F2

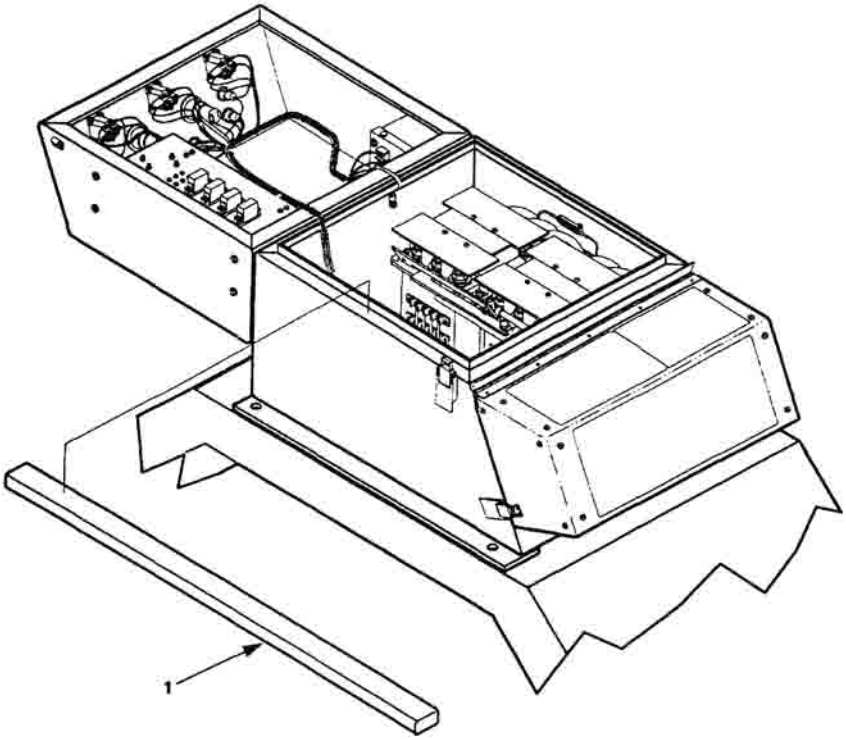

NOTES:

1. REMOVE DAMAGED GASKET MATERIAL FROM SWITCH BOX AND CLEAN THOROUGHLY.
2. MEASURE SWITCH BOX FOR REQUIRED LENGTH AND CUT RUBBER GASKET MATERIAL (1).
3. APPLY TYPE II ADHESIVE (WP 0104, TABLE 1, ITEM 1) TO SWITCH BOX AND INSTALL GASKET MATERIAL.

PARTS LIST				
FIND NO.	PART NO.	QUANTITY REQUIRED	DESCRIPTION	SPECIFICATION
1	2B2B2C1F2	AR	STRIP, RUBBER	ASTM D1056

Figure 1. Switch Box Gasket.

END OF TASK

END OF WORK PACKAGE

FIELD MAINTENANCE

10 kW 60 AND 400 Hz TRAILER-MOUNTED POWER UNITS AND POWER PLANTS

TORQUE LIMITS

CAUTION

If replacement capscrews are of a higher grade than originally supplied, use torque specifications for that placement. This will prevent equipment damage due to over torquing.

NOTE

Always use the torque values listed above when specific torque values are not available.

Table 1. Torque Limits.

SAE Grade Number		1 or 2		5		6 or 7		8	
Quality of Material		Indeterminate		Minimum Commercial		Medium Commercial		Best Commercial	
Capscrew Head Markings		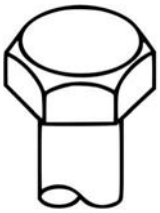		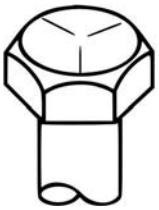		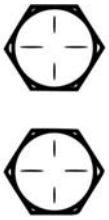		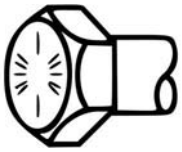	
NOTE Head marking may vary with different manufacturers.									
Capscrew Body Size		Torque		Torque		Torque		Torque	
(Inches)	(Thread)	Ft Lb	(N•m)	Ft Lb	(N•m)	Ft Lb	(N•m)	Ft Lb	(N•m)
1/4	20	5	(7)	8	(11)	10	(14)	12	(16)
	28	6	(8)	10	(14)			14	(19)
5/16	18	11	(15)	17	(23)	19	(26)	24	(33)
	24	13	(18)	19	(16)			27	(37)
3/8	16	18	(24)	31	(42)	34	(46)	44	(60)
	24	20	(27)	35	(47)			49	(66)
7/16	14	28	(38)	49	(66)	55	(75)	70	(95)
	20	30	(41)	55	(75)			78	(106)
1/2	13	39	(53)	75	(102)	85	(115)	105	(142)
	20	41	(56)	85	(115)			120	(163)
9/16	12	51	(69)	110	(149)	120	(163)	155	(210)
	18	55	(75)	120	(163)			170	(231)
5/8	11	83	(113)	150	(203)	167	(226)	210	(285)
	18	95	(129)	170	(231)			240	(325)
3/4	10	105	(142)	270	(366)	280	(380)	375	(508)
	16	115	(156)	295	(400)			420	(569)

Table 1. Torque Limits. - Continued

SAE Grade Number		1 or 2		5		6 or 7		8	
Quality of Material		Indeterminate		Minimum Commercial		Medium Commercial		Best Commercial	
Capscrew Head Markings		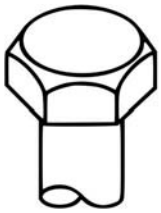		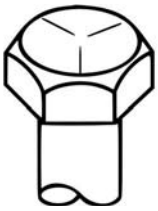		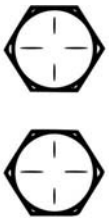		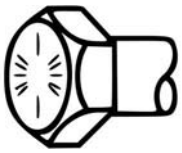	
NOTE Head marking may vary with different manufacturers.									
Capscrew Body Size		Torque		Torque		Torque		Torque	
(Inches)	(Thread)	Ft Lb	(N•m)	Ft Lb	(N•m)	Ft Lb	(N•m)	Ft Lb	(N•m)
7/8	9	160	(217)	395	(536)	440	(597)	605	(820)
	14	175	(237)	435	(590)			675	(915)
1	8	235	(319)	590	(800)	660	(895)	910	(1234)
	14	250	(339)	660	(895)			990	(1342)

END OF WORK PACKAGE

CHAPTER 7

OPERATOR AND FIELD PARTS INFORMATION

FOR

10 kW 60 AND 400 Hz TRAILER-MOUNTED POWER UNITS AND POWER PLANTS

CHAPTER 7

PARTS INFORMATION

WORK PACKAGE INDEX

OPERATOR AND FIELD MAINTENANCE

10 kW 60 AND 400 Hz TRAILER-MOUNTED POWER UNITS AND POWER PLANTS

INTRODUCTION

INTRODUCTION

SCOPE

This RPSTL lists and authorizes spares and repair parts; special tools; special test, measurement, and diagnostic equipment (TMDE); and other special support equipment required for performance of operator and field maintenance of the AN/MJQ-37 and AN/MJQ-38 Power Plants and PU-798, PU-798A, PU-799 and PU-799A Power Units. It authorizes the requisitioning, issue, and disposition of spares, repair parts, and special tools as indicated by the source, maintenance, and recoverability (SMR) codes.

GENERAL

In addition to the Introduction work package, this RPSTL is divided into the following work packages.

1. Repair Parts List Work Packages. Work packages containing lists of spares and repair parts authorized by this RPSTL for use in the performance of maintenance. These work packages also include parts which must be removed for replacement of the authorized parts. Parts lists are composed of functional groups in ascending alphanumeric sequence, with the parts in each group listed in ascending figure and item number sequence. Sending units, brackets, filters, and bolts are listed with the component they mount on. Bulk materials are listed by item name in FIG. BULK at the end of the work packages. Repair parts kits are listed separately in their own functional group and work package.
2. Special Tools List Work Packages. Work packages containing lists of special tools, special TMDE, and special support equipment authorized by this RPSTL (as indicated by Basis of Issue (BOI) information in the DESCRIPTION AND USABLE ON CODE (UOC) column). Tools that are components of common tool sets and/or Class VII are not listed.
3. Cross-Reference Indexes Work Packages. There are 2 cross-reference indexes work packages in this RPSTL: the National Stock Number (NSN) Index work package, and the Part Number (P/N) Index work package. The National Stock Number Index work package refers you to the figure and item number. The Part Number Index work package refers you to the figure and item number.

EXPLANATION OF COLUMNS IN THE REPAIR PARTS LIST AND SPECIAL TOOLS LIST WORK PACKAGES

ITEM NO. (Column (1)). Indicates the number used to identify items called out in the illustration.

SMR CODE (Column (2)). The SMR code containing supply/requisitioning information, maintenance level authorization criteria, and disposition instruction, as shown in the following breakout. This entry may be subdivided into 4 subentries, one for each service.

Table 1. SMR Code Explanation.

Source Code	Maintenance Code		Recoverability Code
XX	XX		X
1st two positions:	3rd position:	4th position:	5th position:
How to get an item.	Who can install, replace, or use the item.	Who can do complete repair* on the item.	Who determines disposition action on unserviceable items.

*Complete Repair: Maintenance capacity, capability, and authority to perform all corrective maintenance tasks of the "Repair" function in a use/user environment in order to restore serviceability to a failed item.

Source Code. The source code tells you how you get an item needed for maintenance, repair, or overhaul of an end item/equipment. Explanations of source codes follow:

Source Code	Application/Explanation
PA PB PC PD PE PF PG PH PR PZ	**NOTE** Items coded PC are subject to deterioration. Stock items; use the applicable NSN to requisition/ request items with these source codes. They are authorized to the level indicated by the code entered in the third position of the SMR code.
KD KF KB	Items with these codes are not to be requested/ requisitioned individually. They are part of a kit which is authorized to the maintenance level indicated in the third position of the SMR code. The complete kit must be requisitioned and applied.
MF-Made at field MH-Made at below depot/sustainment level ML-Made at SRA MD-Made at depot MG-Navy only	Items with these codes are not to be requisitioned/ requested individually. They must be made from bulk material which is identified by the part number in the DESCRIPTION AND USABLE ON CODE (UOC) column and listed in the bulk material group work package of the RPSTL. If the item is authorized to you by the third position code of the SMR code, but the source code indicates it is made at higher level, order the item from the higher level of maintenance.
AF-Assembled by field AH-Assembled by below depot sustainment level AL-Assembled by SRA AD-Assembled by depot AG-Navy only	Items with these codes are not to be requested/ requisitioned individually. The parts that make up the assembled item must be requisitioned or fabricated and assembled at the level of maintenance indicated by the source code. If the third position of the SMR code authorizes you to replace the item, but the source code indicates the item is assembled at a higher level, order the item from the higher level of maintenance.
XA	Do not requisition an "XA" coded item. Order the next higher assembly. (Refer to NOTE below.)
XB	If an item is not available from salvage, order it using the CAGEC and part number.
XC	Installation drawings, diagrams, instruction sheets, field service drawings; identified by manufacturer's part number.
XD	Item is not stocked. Order an XD-coded item through local purchase or normal supply channels using the CAGEC and part number given, if no NSN is available.

NOTE

Cannibalization or controlled exchange, when authorized, may be used as a source of supply for items with the above source codes except for those items source coded "XA" or those aircraft support items restricted by requirements of AR 750-1.

Maintenance Code. Maintenance codes tell you the level(s) of maintenance authorized to use and repair support items. The maintenance codes are entered in the third and fourth positions of the SMR code as follows:

Third Position. The maintenance code entered in the third position tells you the lowest maintenance level authorized to remove, replace, and use an item. The maintenance code entered in the third position will indicate authorization to the following levels of maintenance:

Maintenance Code	Application/Explanation
F -	Field maintenance can remove, replace, and use the item.
H -	Below Depot Sustainment maintenance can remove, replace, and use the item.
L -	Specialized repair activity can remove, replace, and use the item.
G -	Afloat and ashore intermediate maintenance can remove, replace, and use the item (Navy only)
K -	Contractor facility can remove, replace, and use the item.
Z -	Item is not authorized to be removed, replaced, or used at any maintenance level
D -	Depot can remove, replace, and use the item.

*NOTE - Army may use C in the third position. However, for joint service publications, Army will use O.

Fourth Position. The maintenance code entered in the fourth position tells you whether or not the item is to be repaired and identifies the lowest maintenance level with the capability to do complete repair (perform all authorized repair functions).

NOTE

Some limited repair may be done on the item at a lower level of maintenance, if authorized by the Maintenance Allocation Chart (MAC) and SMR codes.

Maintenance Code	Application/Explanation
F -	Field is the lowest level that can do complete repair of the item.
H -	Below Depot Sustainment is the lowest level that can do complete repair of the item.
L -	Specialized repair activity is the lowest level that can do complete repair of the item.
D -	Depot is the lowest level that can do complete repair of the item.
G -	Both afloat and ashore intermediate levels are capable of complete repair of item. (Navy only)
K -	Complete repair is done at contractor facility
Z -	Nonreparable. No repair is authorized.
B -	No repair is authorized. No parts or special tools are authorized for maintenance of "B" coded item. However, the item may be reconditioned by adjusting, lubricating, etc., at the user level.

Recoverability Code. Recoverability codes are assigned to items to indicate the disposition action on unserviceable items. The recoverability code is shown in the fifth position of the SMR code as follows:

Recoverability Code	Application/Explanation
Z -	Nonreparable item. When unserviceable, condemn and dispose of the item at the level of maintenance shown in the third position of the SMR code.
F -	Reparable item. When uneconomically reparable, condemn and dispose of the item at the field level.
H -	Reparable item. When uneconomically reparable, condemn and dispose of the item at the below depot sustainment level.
D -	Reparable item. When beyond lower level repair capability, return to depot. Condemnation and disposal of item are not authorized below depot level.
L -	Reparable item. Condemnation and disposal not authorized below Specialized Repair Activity (SRA).
A -	Item requires special handling or condemnation procedures because of specific reasons (such as precious metal content, high dollar value, critical material, or hazardous material). Refer to appropriate manuals/directives for specific instructions.
G -	Field level reparable item. Condemn and dispose at either afloat or ashore intermediate levels. (Navy only)
K -	Reparable item. Condemnation and disposal to be performed at contractor facility.

NSN (Column (3)). The NSN for the item is listed in this column.

CAGEC (Column (4)). The Commercial and Government Entity Code (CAGEC) is a five-digit code which is used to identify the manufacturer, distributor, or Government agency/activity that supplies the item.

PART NUMBER (Column (5)). Indicates the primary number used by the manufacturer (individual, company, firm, corporation, or Government activity), which controls the design and characteristics of the item by means of its engineering drawings, specifications, standards, and inspection requirements to identify an item or range of items.

NOTE

When you use an NSN to requisition an item, the item you receive may have a different part number from the number listed.

DESCRIPTION AND USABLE ON CODE (UOC) (Column (6)). This column includes the following information:

1. The federal item name, and when required, a minimum description to identify the item.
2. Part numbers of bulk materials are referenced in this column in the line entry to be manufactured or fabricated.
3. Hardness Critical Item (HCI). A support item that provides the equipment with special protection from electromagnetic pulse (EMP) damage during a nuclear attack.
4. The statement END OF FIGURE appears just below the last item description in column (6) for a given figure in both the repair parts list and special tools list work packages.

QTY (Column (7)). The QTY (quantity per figure) column indicates the quantity of the item used in the breakout shown on the illustration/figure, which is prepared for a functional group, subfunctional group, or an assembly. A "V" appearing in this column instead of a quantity indicates that the quantity is variable and quantity may change from application to application.

EXPLANATION OF CROSS-REFERENCE INDEXES WORK PACKAGES FORMAT AND COLUMNS

1. National Stock Number (NSN) Index Work Package. NSN's in this index are listed in National Item Identification Number (NIIN) sequence.

   STOCK NUMBER Column. This column lists the NSN in NIIN sequence. The NIIN consists of the last nine digits of the NSN. When using this column to locate an item, ignore the first four digits of the NSN. However, the complete NSN should be used when ordering items by stock number.

   For example, if the NSN is 5385-01-574-1476, the NIIN is 01-574-1476.

   FIG. Column. This column lists the number of the figure where the item is identified/located. The figures are in numerical order in the repair parts list and special tools list work packages.

   ITEM Column. The item number identifies the item associated with the figure listed in the adjacent FIG. column. This item is also identified by the NSN listed on the same line.

2. Part Number (P/N) Index Work Package. Part numbers in this index are listed in ascending alphanumeric sequence (vertical arrangement of letter and number combinations which places the first letter or digit of each group in order A through Z, followed by the numbers 0 through 9 and each following letter or digit in like order).

   PART NUMBER Column. Indicates the part number assigned to the item.

   FIG. Column. This column lists the number of the figure where the item is identified/located in the repair parts list and special tools list work packages.

   ITEM Column. The item number is the number assigned to the item as it appears in the figure referenced in the adjacent figure number column.

SPECIAL INFORMATION

UOC. The UOC appears in the lower left corner of the Description Column heading. Usable on codes are shown as "UOC: ..." in the Description Column (justified left) on the first line under the applicable item/nomenclature. Uncoded items are applicable to all models. Identification of the UOCs used in the RPSTL are:

Code	Used On
YJA	AN/MJQ-37
YHZ	AN/MJQ-38
YFL	PU-798
YFK	PU-799
YFT	PU-798A
FMH	PU-799A

Fabrication Instructions. Bulk materials required to manufacture items are listed in the bulk material functional group of this RPSTL. Part numbers for bulk material are also referenced in the Description Column of the line item entry for the item to be manufactured/fabricated.

Index Numbers. Items which have the word BULK in the figure column will have an index number shown in the item number column. This index number is a cross-reference between the NSN / Part Number (P/N) Index work packages and the bulk material list in the repair parts list work package.

Illustrations List. The illustrations in this RPSTL contain field authorized items. The tabular list in the repair parts list work package contains only those parts coded "F" in the third position of the SMR code, therefore, there may be a break in the item number sequence.

HOW TO LOCATE REPAIR PARTS

1. When NSNs or Part Numbers Are Not Known.

   First. Using the table of contents, determine the assembly group to which the item belongs. This is necessary since figures are prepared for assembly groups and subassembly groups, and lists are divided into the same groups.

   Second. Find the figure covering the functional group or the subfunctional group to which the item belongs.

   Third. Identify the item on the figure and note the number(s).

   Fourth. Look in the repair parts list work packages for the figure and item numbers. The NSNs and part numbers are on the same line as the associated item numbers.

2. When NSN Is Known.

   First. If you have the NSN, look in the STOCK NUMBER column of the NSN index work package. The NSN is arranged in NIIN sequence. Note the figure and item number next to the NSN.

   Second. Turn to the figure and locate the item number. Verify that the item is the one you are looking for.

3. When Part Number Is Known.

   First. If you have the part number and not the NSN, look in the PART NUMBER column of the part number index work package. Identify the figure and item number.

   Second. Look up the item on the figure in the applicable repair parts list work package.

ABBREVIATIONS

Not applicable.

END OF WORK PACKAGE

OPERATOR AND FIELD MAINTENANCE

10 kW 60 AND 400 Hz TRAILER-MOUNTED POWER UNITS AND POWER PLANTS

GROUP 01 GENERATOR SET

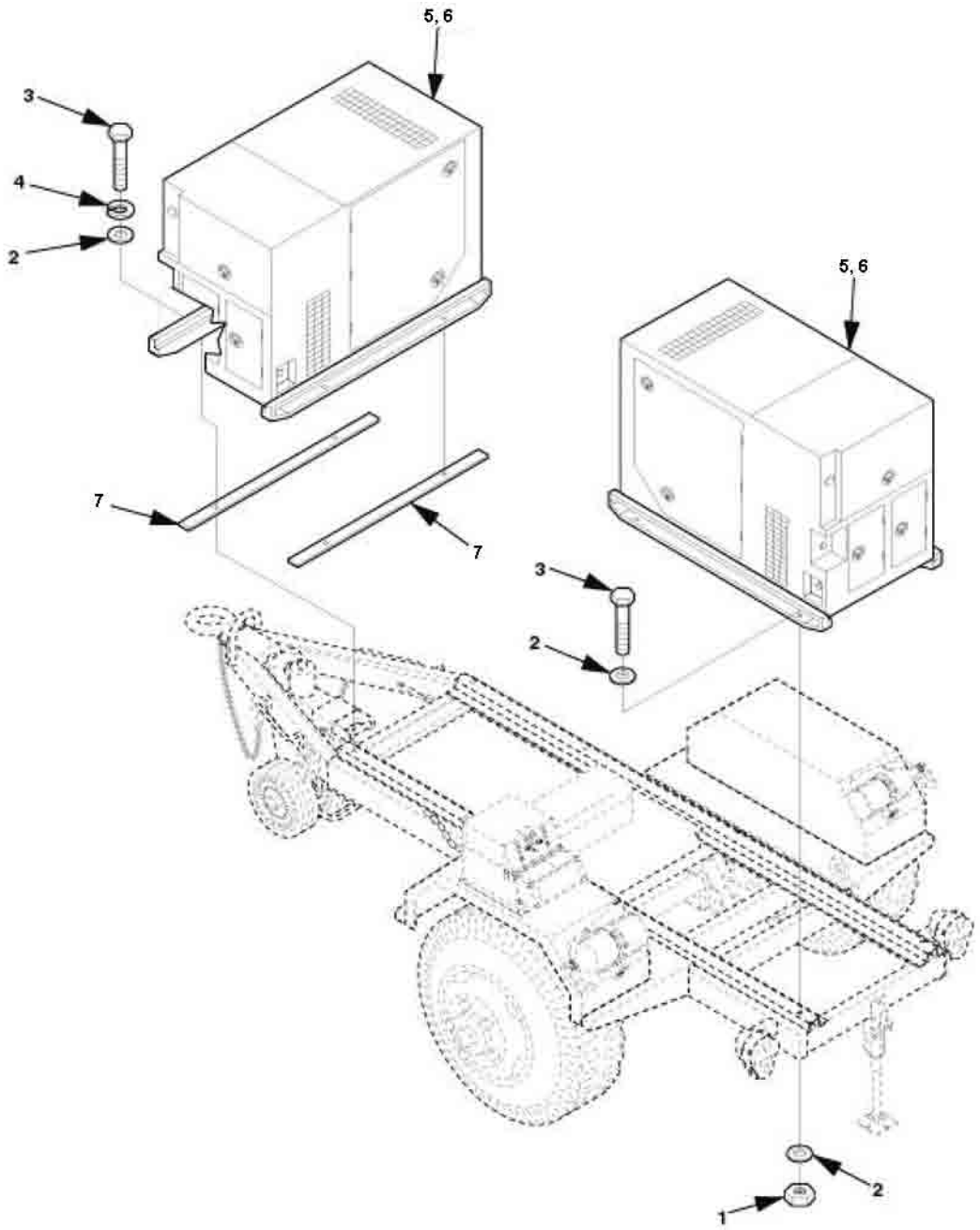

Figure 1. Generator Set Installation.

(1) ITEM NO	(2) SMR CODE	(3) NSN	(4) CAGEC	(5) PART NUMBER	(6) DESCRIPTION AND USABLE ON CODE (UOC)	(7) QTY
					GROUP 01 GENERATOR SET	
					FIG. 1 GENERATOR SET INSTALLATION	
1	PAFZZ		96906	MS51922-33	. NUT, SELF-LOCKING, HE UOC: YHZ, YJA	6
2	PAFZZ		96906	MS51412-9	. WASHER, FLAT UOC: YHZ, YJA	14
3	PAFZZ		80204	B1821BH050C175N	. SCREW, CAP, HEXAGON H UOC: YHZ, YJA	8
4	PAFZZ		96906	MS51415-9	. WASHER, LOCK UOC: YHZ, YJA	2
5	PDFHH		30554	MEP 803A	GENERATOR SET, DIESEL UOC: YJA, YHZ	2
6	PDFHH		30554	MEP 813A	GENERATOR SET, DIESEL UOC: YJA, YHZ	2
7	XDFZZ		97403	13229E9635	. PLATE, SUPPORT UOC: YHZ, YJA	2
					END OF FIGURE	

OPERATOR AND FIELD MAINTENANCE

10 kW 60 AND 400 Hz TRAILER-MOUNTED POWER UNITS AND POWER PLANTS

GROUP 01 GENERATOR SET

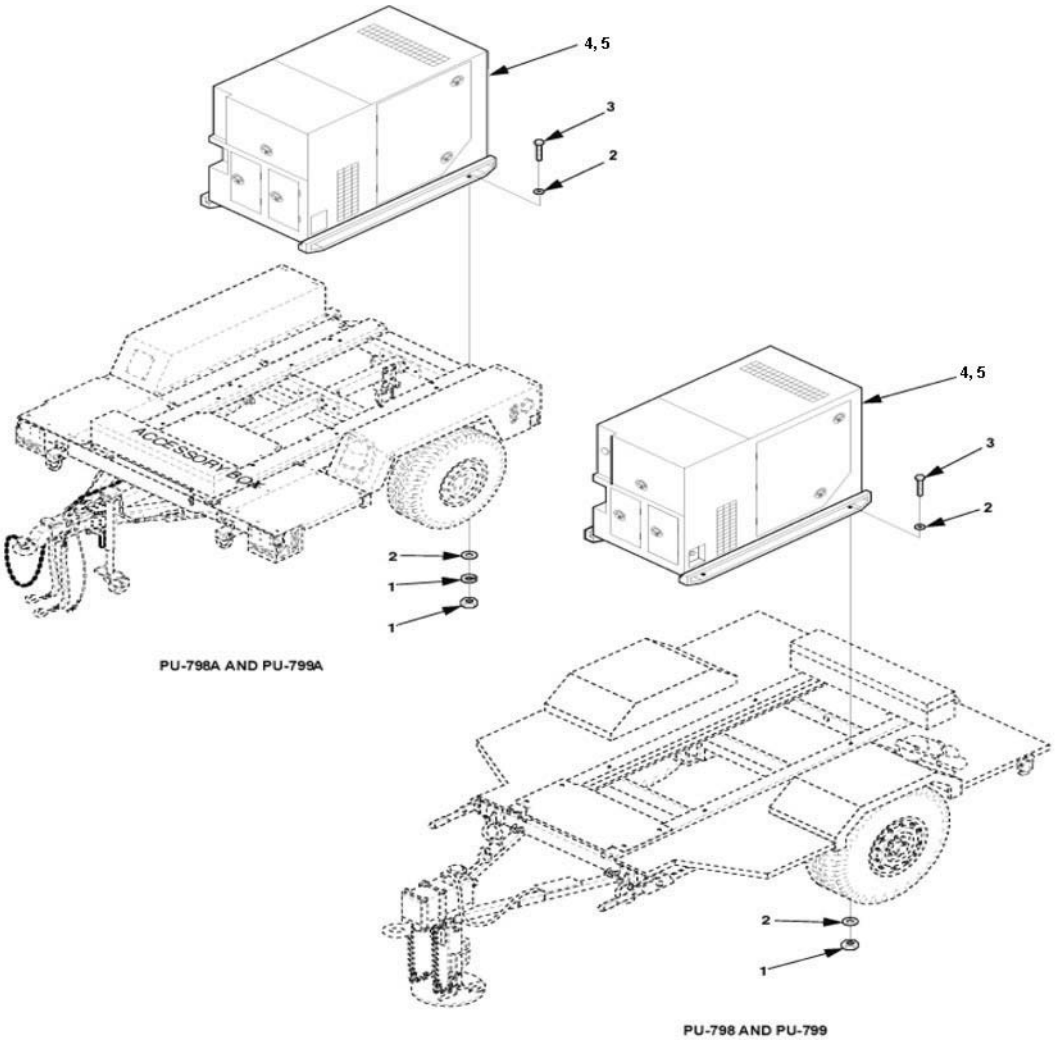

Figure 2. Generator Set Installation.

(1) ITEM NO	(2) SMR CODE	(3) NSN	(4) CAGEC	(5) PART NUMBER	(6) DESCRIPTION AND USABLE ON CODE (UOC)	(7) QTY
					GROUP 01 GENERATOR SET	
					FIG. 2 GENERATOR SET INSTALLATION	
1	PAFZZ		96906	MS5192243	. NUT, SELF-LOCKING, HE UOC: YFK, YFL	4
1	PAFZZ		96906	MS51971-5	. NUT, PLAIN, HEX HEAD UOC: FMH, YFT	4
1	PAFZZ		96906	MS35338-143	. WASHER, LOCK UOC: FMH, YFT	4
2	PAFZZ		96906	MS514124	. WASHER, FLAT UOC: YFK, YFL	8
2	PAFZZ		96906	MS15795-817	. WASHER, FLAT UOC: FMH, YFT	8
3	PAFZZ		80204	B1821BH050C138N	. SCREW, CAP, HEXAGON H UOC: FMH, YFT	4
3	PAFZZ		96906	MS35307-414	. SCREW, CAP, HEXAGON H UOC: FMH, YFT	4
4	PAFZZ		30554	MEP 803A	. GENERATOR SET, DIESEL UOC: YFL, YFT	1
5	PAFZZ		30554	MEP 813A	. GENERATOR SET, DIESEL UOC: YFK, FMH	1

END OF FIGURE

OPERATOR AND FIELD MAINTENANCE

10 kW 60 AND 400 Hz TRAILER-MOUNTED POWER UNITS AND POWER PLANTS

GROUP 02 ELECTRICAL SYSTEM

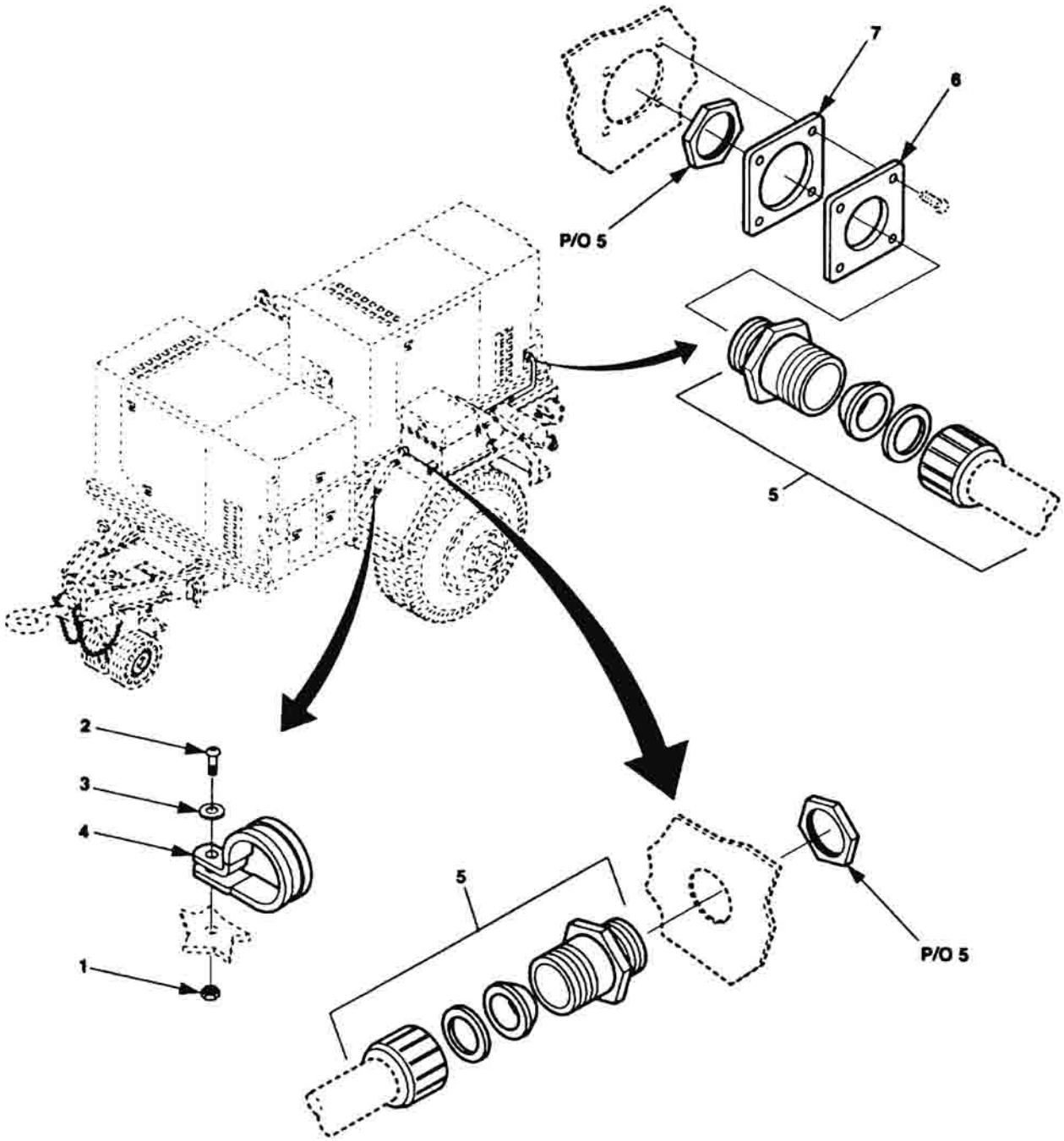

Figure 3. Power Cables.

(1) ITEM NO	(2) SMR CODE	(3) NSN	(4) CAGEC	(5) PART NUMBER	(6) DESCRIPTION AND USABLE ON CODE (UOC)	(7) QTY
					GROUP 02 ELECTRICAL SYSTEM	
					FIG. 3 POWER CABLES	
1	PAFZZ		96906	MS35650-302	. NUT, PLAIN, HEXAGON UOC: YHZ, YJA	4
2	PAFZZ		96906	MS35207-167	. SCREW, MACHINE UOC: YHZ, YJA	4
3	XBFZZ		96906	MS51412-2	. WASHER, FLAT UOC: YHZ, YJA	4
4	PAFZZ		96906	MS21919WCG21	. CLAMP, LOOP UOC: YHZ, YJA	4
5	PAFZA		97403	13218E5149-8	. TUBE, STUFFING UOC: YHZ, YJA	4
6	XBFZZ		97403	13229E5827	. PLATE, GEN OUTPUT UOC: YHZ, YJA	2
7	PAFZZ		97403	M3BE510	. GASKET, RUBBER UOC: YHZ, YJA	2
					END OF FIGURE	

OPERATOR AND FIELD MAINTENANCE

10 kW 60 AND 400 Hz TRAILER-MOUNTED POWER UNITS AND POWER PLANTS

GROUP 02 ELECTRICAL SYSTEM

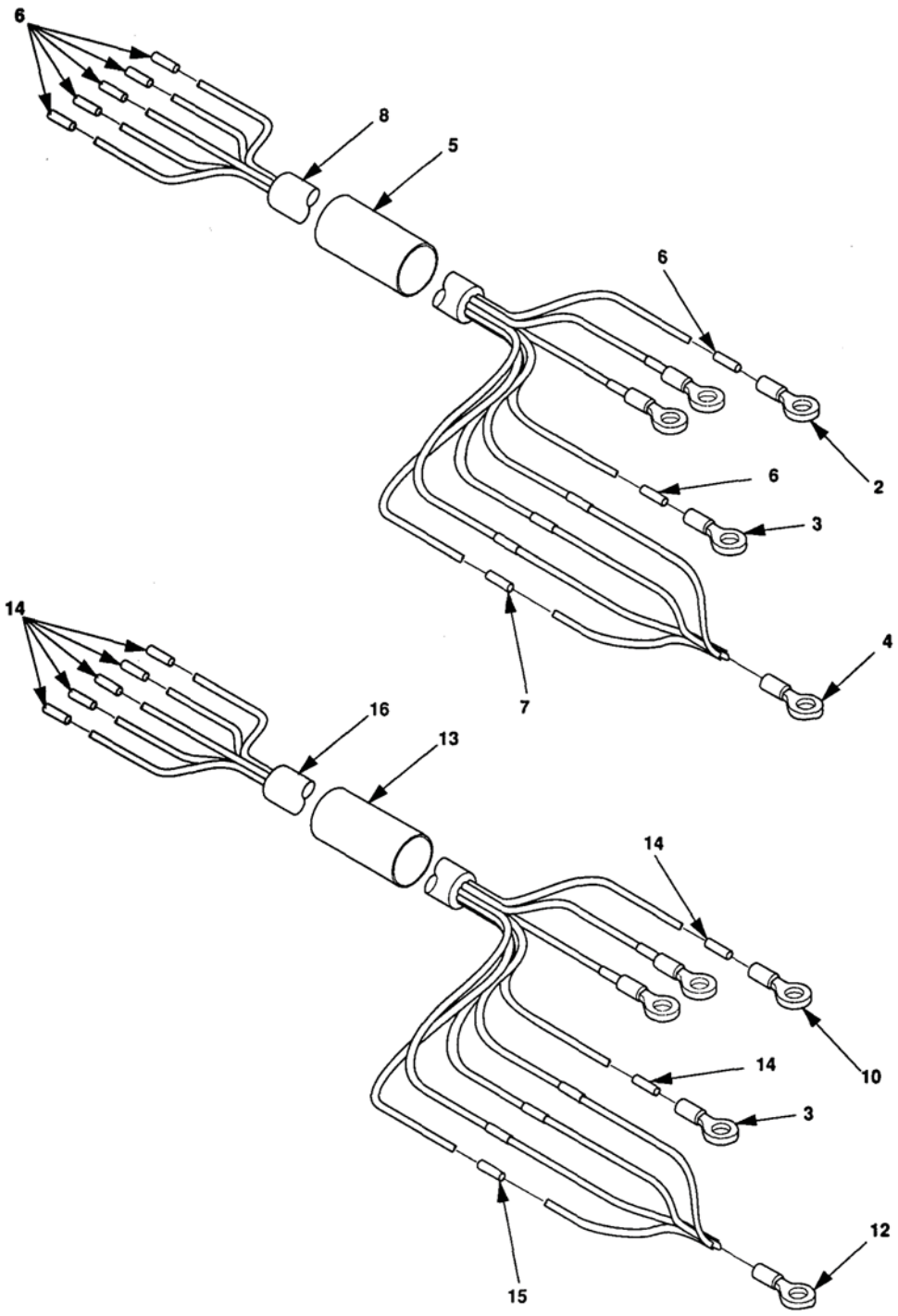

Figure 4. Cable Assembly.

(1) ITEM NO	(2) SMR CODE	(3) NSN	(4) CAGEC	(5) PART NUMBER	(6) DESCRIPTION AND USABLE ON CODE (UOC)	(7) QTY
					GROUP 02 ELECTRICAL SYSTEM	
					FIG. 4 CABLE ASSEMBLY	
1	AFFFF		97403	13229E5836-3	. CABLE ASSEMBLY FRONT CABLE (NOT SHOWN) UOC: YHZ, YJA	1
2	PAFZZ		96906	MS25036-125	. . TERMINAL, LUG UOC: YHZ, YJA	3
3	PAFZZ		96906	MS20659-145	. . TERMINAL, LUG UOC: YHZ, YJA	1
4	PAFZZ		96906	MS20659-143	. . TERMINAL, LUG UOC: YHZ, YJA	1
5	MFFZZ		19099	13229E5836-3-5	. . INSULATION SLEEVING MAKE FROM P/N M23053/5-111-0 (81349), 3 IN. UOC: YHZ, YJA	1
6	MFFZZ		19099	13229E5836-3-6	. . INSULATION SLEEVING MAKE FROM P/N M23053/5-107-9 (81349), AS REQUIRED UOC: YHZ, YJA	9
7	MFFZZ		19099	13229E5836-3-7	. . INSULATION SLEEVING MAKE FROM P/N M23053/5-105-9 (81349), AS REQUIRED UOC: YHZ, YJA	4
8	MFFZZ		19099	13229E5836-3-1	. . CABLE, POWER MAKE FROM P/N C0-04HDE (4/4-4/12R)1290 (81349), 83.5 IN. REQUIRED UOC: YHZ, YJA	1
9	AFFFF		97403	13229E5836-4	. CABLE ASSEMBLY REAR CABLE UOC: YHZ, YJA	1
10	PAFZZ		96906	MS25036-125	. . TERMINAL, LUG UOC: YHZ, YJA	3
11	PAFZZ		96906	MS20659-145	. . TERMINAL, LUG UOC: YHZ, YJA	1
12	PAFZZ		96906	MS20659-143	. . TERMINAL, LUG UOC: YHZ, YJA	1
13	MFFZZ		19099	13229E5836-4-5	. . INSULATION SLEEVING MAKE FROM P/N M23053/5-111-0 (81349), 3 IN. REQUIRED UOC: YHZ, YJA	1
14	MFFZZ		19099	13229E5836-4-6	. . INSULATION SLEEVING MAKE FROM P/N M23053/5-107-9 (81349), AS REQUIRED UOC: YHZ, YJA	9
15	MFFZZ		19099	13229E5836-4-7	. . INSULATION SLEEVING MAKE FROM P/N M23053/5-105-9 (81349), AS REQUIRED UOC: YHZ, YJA	4

(1) ITEM NO	(2) SMR CODE	(3) NSN	(4) CAGEC	(5) PART NUMBER	(6) DESCRIPTION AND USABLE ON CODE (UOC)	(7) QTY
16	MFFZZ		19099	13229E5836-4-1	. . CABLE, POWER MAKE FROM P/N C0-04HDE(4/4-4/12R)1290 (81349), 111 IN. REQUIRED UOC: YHZ, YJA	1

END OF FIGURE

OPERATOR AND FIELD MAINTENANCE

10 kW 60 AND 400 Hz TRAILER-MOUNTED POWER UNITS AND POWER PLANTS

GROUP 02 ELECTRICAL SYSTEM

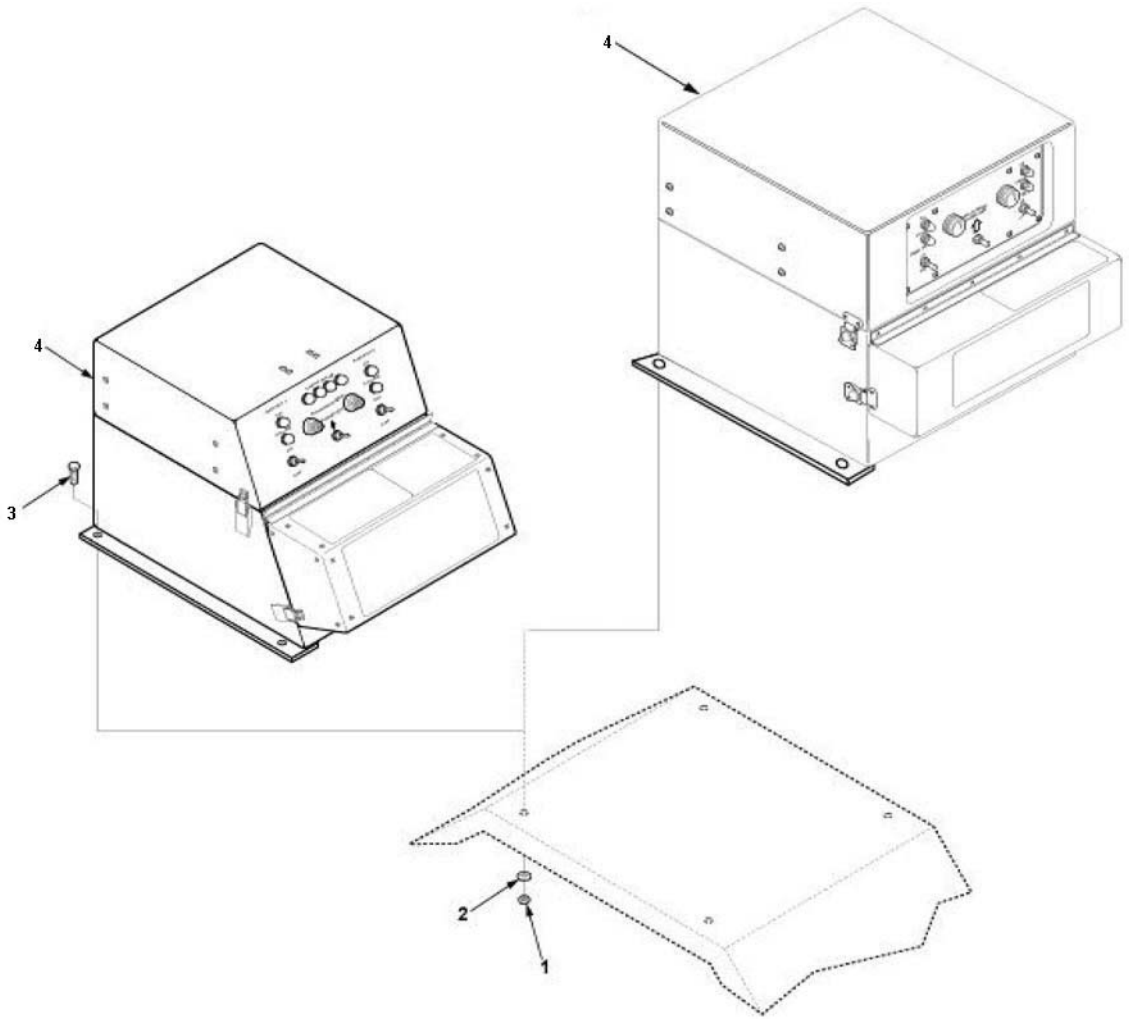

Figure 5. Switch Box Installation.

(1) ITEM NO	(2) SMR CODE	(3) NSN	(4) CAGEC	(5) PART NUMBER	(6) DESCRIPTION AND USABLE ON CODE (UOC)	(7) QTY
					GROUP 02 ELECTRICAL SYSTEM	
					FIG. 5 SWITCH BOX INSTALLATION	
1	PAFZZ		96906	MS51922-17	. NUT, SELF-LOCKING, HE UOC: YHZ, YJA	4
2	PAFZZ		96906	MS51412-7	. WASHER, FLAT UOC: YHZ, YJA	4
3	PAFZZ		80204	B1821BH038C225N	. SCREW, CAP, HEXAGON H UOC: YHZ, YJA	4
4	XDFFF		97403	13229E5820-1	. SWITCHBOX ASSEMBLY UOC: YHZ, YJA	1
4	XDFFF		97403	13229E5820-2	. SWITCHBOX ASSEMBLY UOC: YHZ, YJA	1
					END OF FIGURE	

OPERATOR AND FIELD MAINTENANCE

10 kW 60 AND 400 Hz TRAILER-MOUNTED POWER UNITS AND POWER PLANTS

GROUP 02 ELECTRICAL SYSTEM

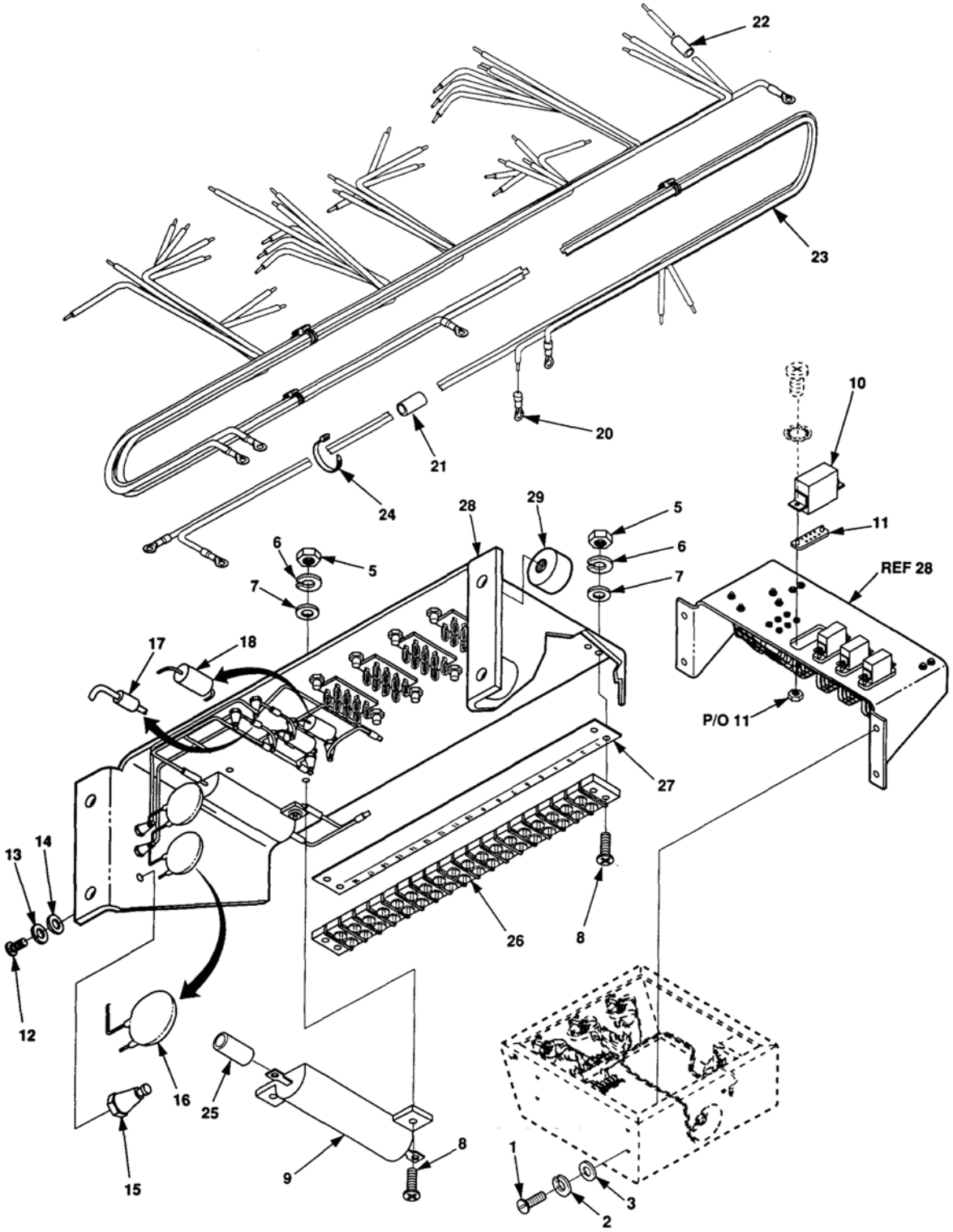

Figure 6. Relay Board Harness Assembly (Sheet 1 of 2).

WIRE LIST					
WIRE NO	TERMINATION		TERMINATION		WIRE FIND NO.
	FROM	ITEM NO.	TO	TERMINAL ITEM NO.	
1	XK3-2		TB1-1	20	23
2	XK3-3		TB1-4	20	23
3	XK3-4		TB1-5	20	23
4	XK3-5		TB1-3	20	23
5	XK3-6		TB1-6	20	23
6	XK3-7		TB1-2	20	23
7	XK5-2		TB1-1	20	23
8	XK5-3		TB1-8	20	23
9	XK5-4		TB1-10	20	23
10	XK5-5		TB1-17	20	23
11	XK5-6		TB1-6	20	23
12	E-7		E-6	-	23
13	XK4-2		TB1-14	20	23
14	XK4-3		TB1-9	20	23
15	XK4-4		TB1-5	20	23
16	XK4-5		TB1-3	20	23
17	XK4-6		TB1-7	20	23
18	XK4-7		TB1-15	20	23
19	R1-1		TB1-17	20	23
20	XK6-3		TB1-12	20	23
21	XK6-4		TB1-11	20	23
22	XK6-5		TB1-16	20	23
23	XK6-6		TB1-13	20	23
24	XK6-7		TB1-15	20	23
25	R1-2		E6	-	23
26	R2-2		E3	-	23
27	E5		TB1-1	20	23
28	E4		TB1-1	20	23
29	R2-1		TB1-16	20	23
30	E3		TB1-15	20	23
31	E-1		E4	-	23
32	XK507		TB1-2	20	23
33	E-1		TB1-14	20	23
34	E8		TB1-8	20	23
35	XK6-2		TB1-14	20	23
36	E9		E3		23

Figure 6. Relay Board Harness Assembly (Sheet 2 of 2).

(1) ITEM NO	(2) SMR CODE	(3) NSN	(4) CAGEC	(5) PART NUMBER	(6) DESCRIPTION AND USABLE ON CODE (UOC)	(7) QTY
					GROUP 02 ELECTRICAL SYSTEM	
					FIG. 6 RELAY BOARD HARNESS ASSEMBLY	
1	PAFZZ		96906	MS51957-46	. SCREW, MACHINE UOC: YHZ, YJA	4
2	PAFZZ		96906	MS35338-137	. WASHER, LOCK UOC: YHZ, YJA	4
3	PAFZZ		96906	MS15795-841	. WASHER, FLAT UOC: YHZ, YJA	4
4	XDFFF		97403	13229E5830	. RELAY BOARD ASSEMBLY (NOT SHOWN) UOC: YHZ, YJA	1
5	PAFZZ		96906	MS35649-244	. . NUT, PLAIN, HEXAGON UOC: YHZ, YJA	6
6	PAFZZ		96906	MS35338-135	. . WASHER, LOCK UOC: YHZ, YJA	6
7	PAFZZ		88044	AN960-C4	. . WASHER, FLAT UOC: YHZ, YJA	6
8	PAFZZ		96906	MS51957-18	. . SCREW, MACHINE UOC: YHZ, YJA	6
9	PAFZZ		81349	RER75F2490R	. . RESISTOR, FIXED, WIRE UOC: YHZ, YJA	2
10	PAFZZ		81349	M5757/23-003	. . RELAY, ELECTROMAGNET UOC: YHZ, YJA	4
11	PAFZZ		97403	13222E9686	. . SOCKET, PLUG-IN ELEC UOC: YHZ, YJA	4
12	PAFZZ		96906	MS51957-27	. . SCREW, MACHINE UOC: YHZ, YJA	9
13	PAFZZ		96906	MS35338-136	. . WASHER, LOCK UOC: YHZ, YJA	9
14	PAFZZ		96906	MS51412-1	. . WASHER, FLAT UOC: YHZ, YJA	9
15	PAFZZ		81349	MS5455/199G03	. . TERMINAL, STUD UOC: YHZ, YJA	9
16	PAFZZ		60705	565C10GAP10	. . CAPACITOR UOC: YHZ, YJA	2
17	PAFZZ		81349	JANTX1N5619	. . SEMICONDUCTOR DEVIC UOC: YHZ, YJA	4
18	PAFZZ		81349	M39006/22-1631	. . CAPACITOR, FXD, ELEC UOC: YHZ, YJA	2
19	XDFFF		97403	13229E5829	. . HARNESS ASSEMBLY (NOT SHOWN) UOC: YHZ, YJA	1
20	PAFZZ		96906	MS25036-101	. . . TERMINAL, LUG UOC: YHZ, YJA	31
21	MFFZZ		92194	FIT221 ¼ WHITE	. . . INSULATION SLEEVING MAKE FROM P/N M23053/5-107-4 (81349), 1.5 IN. REQUIRED UOC: YHZ, YJA	1

(1) ITEM NO	(2) SMR CODE	(3) NSN	(4) CAGEC	(5) PART NUMBER	(6) DESCRIPTION AND USABLE ON CODE (UOC)	(7) QTY
22	MFFZZ		19099	13229E5829-6	. . . INSULATION SLEEVING MAKE FROM P/N M23053/5-105-4 (81349), 1.5 IN. REQUIRED UOC: YHZ, YJA	70
23	MFFZZ		19099	13229E5829-1	. . . WIRE, ELECTRICAL MAKE FROM P/N M22759/16-20-9 (81349), AS REQUIRED UOC: YHZ, YJA	1
24	PAFZZ		06811	H1104	. . . STRAP, TIEDOWN, ELECT UOC: YHZ, YJA	V
25	MFFZZ		19099	13229E5830-9	. INSULATION SLEEVING MAKE FROM P/N M23053/5-104-0 (81349), AS REQUIRED UOC: YHZ, YJA	1
26	XDFZZ		81349	37TB18B	. . TERMINAL BOARD UOC: YHZ, YJA	1
27	PAFZZ		81349	MSA37TB18	. . MARKER STRIP, TERMIN UOC: YHZ, YJA	1
28	XDFFF		97403	13229E5823	. BRACKET UOC: YHZ, YJA	1
29	PAFZZ		81349	M45938/1-13C	. NUT, PLAIN, CLINCH UOC: YHZ, YJA	4

END OF FIGURE

OPERATOR AND FIELD MAINTENANCE

10 kW 60 AND 400 Hz TRAILER-MOUNTED POWER UNITS AND POWER PLANTS

GROUP 02 ELECTRICAL SYSTEM

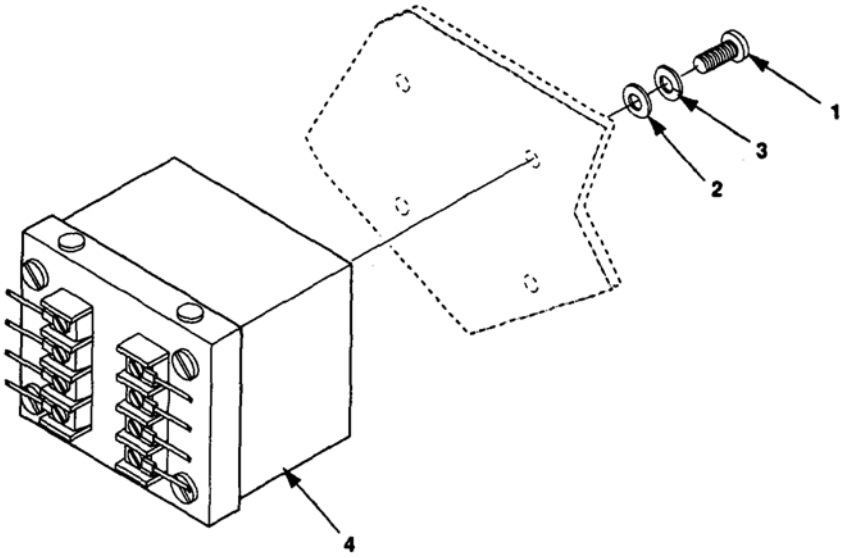

Figure 7. Permissive Paralleling Relay.

(1) ITEM NO	(2) SMR CODE	(3) NSN	(4) CAGEC	(5) PART NUMBER	(6) DESCRIPTION AND USABLE ON CODE (UOC)	(7) QTY
					GROUP 02 ELECTRICAL SYSTEM	
					FIG. 7 PERMISSIVE PARALLELING RELAY	
1	PAFZZ		96906	MS51957-46	. SCREW, MACHINE UOC: YHZ, YJA	4
2	PAFZZ		96906	MS15795-841	. WASHER, FLAT UOC: YHZ, YJA	4
3	PAFZZ		96906	MS35338-137	. WASHER, LOCK UOC: YHZ, YJA	4
4	PAFZZ		60177	11500	. RELAY, PERMISSIVE PR UOC: YHZ, YJA	1
					END OF FIGURE	

OPERATOR AND FIELD MAINTENANCE

10 kW 60 AND 400 Hz TRAILER-MOUNTED POWER UNITS AND POWER PLANTS

GROUP 02 ELECTRICAL SYSTEM

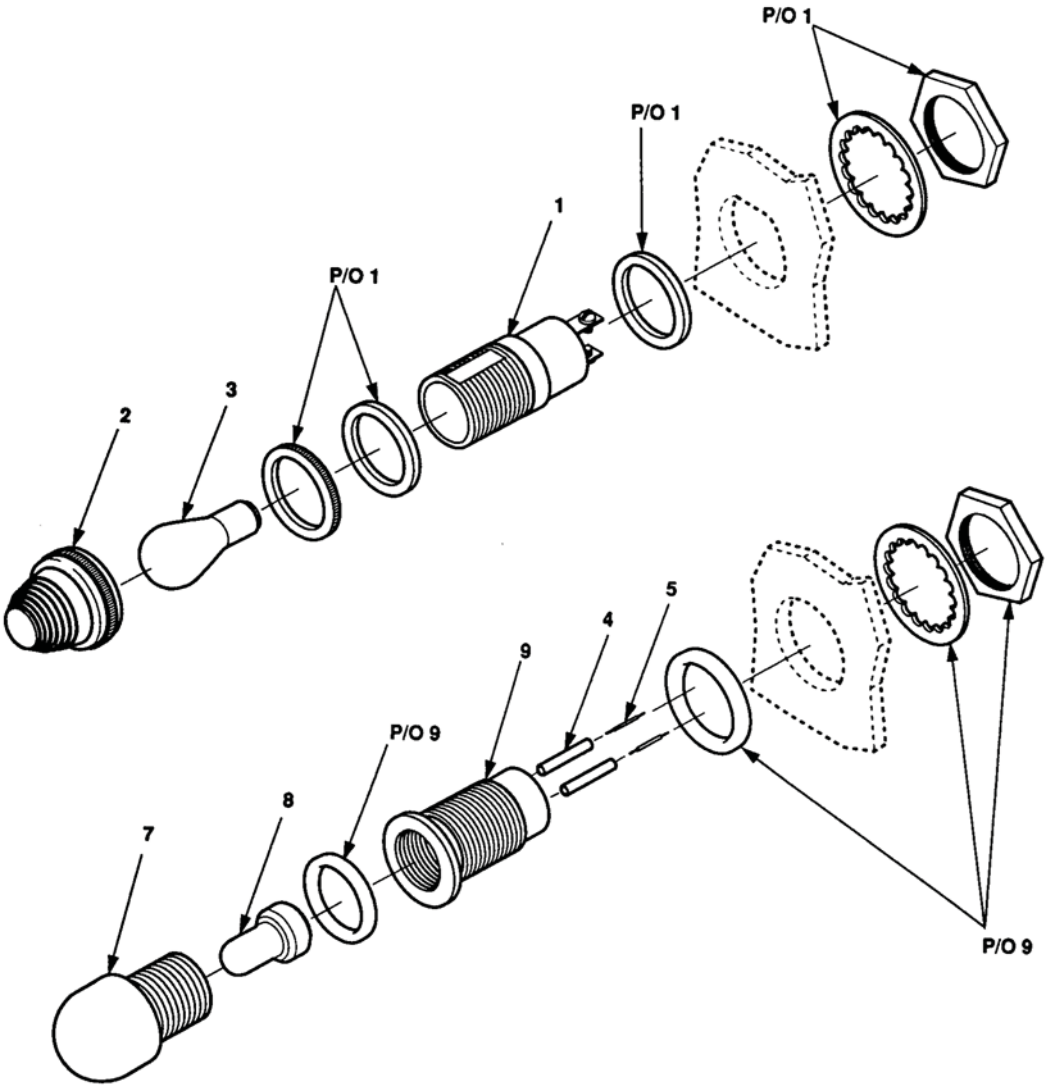

Figure 8. Indicator Lights.

(1) ITEM NO	(2) SMR CODE	(3) NSN	(4) CAGEC	(5) PART NUMBER	(6) DESCRIPTION AND USABLE ON CODE (UOC)	(7) QTY
					GROUP 02 ELECTRICAL SYSTEM	
					FIG. 8 INDICATOR LIGHTS	
1	PAFZZ		81349	LH80/1	. LIGHT, INDICATOR UOC: YHZ, YJA	3
2	PAFZZ		81349	LC21CN3	. LENS, LIGHT UOC: YHZ, YJA	3
3	PAFZZ		96906	MS15567-2	. LAMP, INCANDESCENT UOC: YHZ, YJA	3
4	MOFZZ		19099	13229E5820-44	. INSULATION SLEEVING MAKE FROM P/N M23053/5-107-9 (81349), AS REQUIRED UOC: YHZ, YJA	1
5	MOFZZ		19099	13229E5820-43	. WIRE, ELECTRICAL MAKE FROM P/N M22759/16-16-9 (81349), AS REQUIRED UOC: YHZ, YJA	1
6	PAFFF		97403	13214E1391	. LIGHT, INDICATOR (NOT SHOWN) UOC: YHZ, YJA	4
7	PAFZZ		72619	181-0931-001	. . LENS CLEAR UOC: YHZ, YJA	1
8	PAFZZ		58224	G9B	. . LAMP UOC: YHZ, YJA	1
9	PAFZZ		72619	181-8836-09-553	. . LIGHT, INDICATOR UOC: YHZ, YJA	1
					END OF FIGURE	

OPERATOR AND FIELD MAINTENANCE

10 kW 60 AND 400 Hz TRAILER-MOUNTED POWER UNITS AND POWER PLANTS

GROUP 02 ELECTRICAL SYSTEM

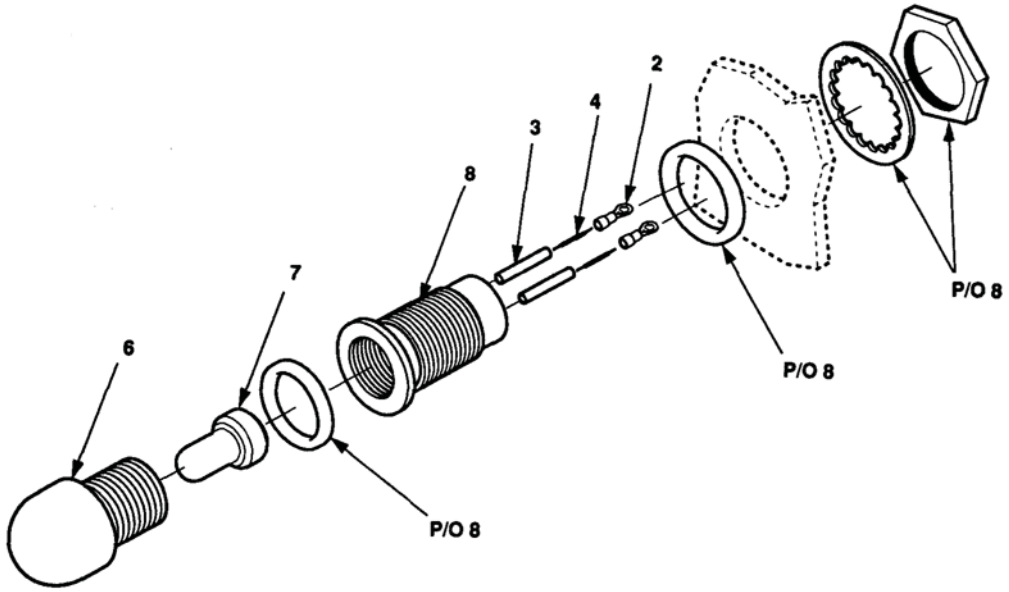

Figure 9. Light Assembly.

(1) ITEM NO	(2) SMR CODE	(3) NSN	(4) CAGEC	(5) PART NUMBER	(6) DESCRIPTION AND USABLE ON CODE (UOC)	(7) QTY
					GROUP 02 ELECTRICAL SYSTEM	
					FIG. 9 LIGHT ASSEMBLY	
1	AOFFF		97403	13229E5764-2	. LIGHT AND WIRE (NOT SHOWN) UOC: YHZ, YJA	4
2	PAFZZ		96906	MS25036-101	. . TERMINAL, LUG UOC: YHZ, YJA	2
3	MOFZZ		19099	13229E57642-2	. . INSULATION SLEEVING MAKE FROM P/N M23053-104-9 (81349), 1 IN REQUIRED UOC: YHZ, YJA	2
4	MOFZZ		19099	13229E5764-2-3	. . WIRE, ELECTRICAL MAKE FROM P/N M50862-18-9 (81349), 8 IN REQUIRED UOC: YHZ, YJA	2
5	PAFFF		97403	13214E1391	. . LIGHT, INDICATOR (NOT SHOWN) UOC: YHZ, YJA	1
6	PAFZZ		72619	181-0937-003	. . . LENS CLEAR UOC: YHZ, YJA	1
7	PAFZZ		03538	77A102527P001	. . . LAMP, GLOW UOC: YHZ, YJA	1
8	PAFZZ		83330	181-8836-09-553	. . . LIGHT, INDICATOR UOC: YHZ, YJA	1
					END OF FIGURE	

OPERATOR AND FIELD MAINTENANCE

10 kW 60 AND 400 Hz TRAILER-MOUNTED POWER UNITS AND POWER PLANTS

GROUP 02 ELECTRICAL SYSTEM

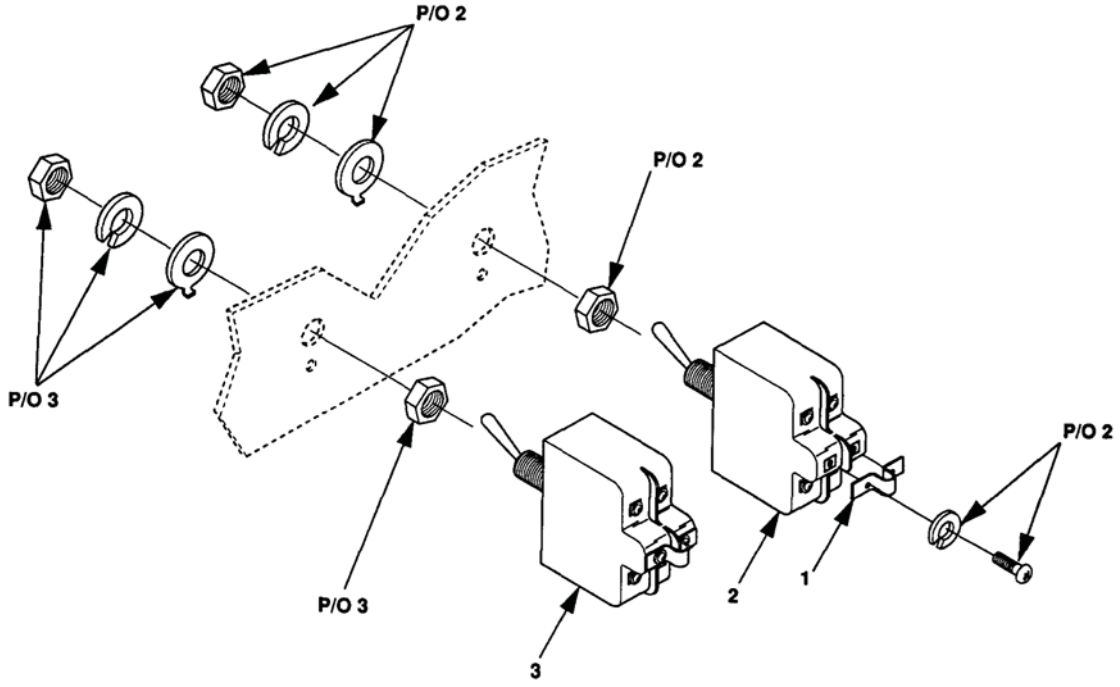

Figure 10. Switches.

(1) ITEM NO	(2) SMR CODE	(3) NSN	(4) CAGEC	(5) PART NUMBER	(6) DESCRIPTION AND USABLE ON CODE (UOC)	(7) QTY
					GROUP 02 ELECTRICAL SYSTEM	
					FIG. 10 SWITCHES	
1	PAFZZ		81349	TBJA	. BUS, CONDUCTOR UOC: YHZ, YJA	2
2	PAFZZ		96906	MS27407-3	. SWITCH, TOGGLE ON LINE SWITCH UOC: YHZ, YJA	2
3	PAFZZ		96906	MS24524-30	. SWITCH, TOGGLE TRANSFER SWITCH UOC: YHZ, YJA	1
					END OF FIGURE	

OPERATOR AND FIELD MAINTENANCE

10 kW 60 AND 400 Hz TRAILER-MOUNTED POWER UNITS AND POWER PLANTS

GROUP 02 ELECTRICAL SYSTEM

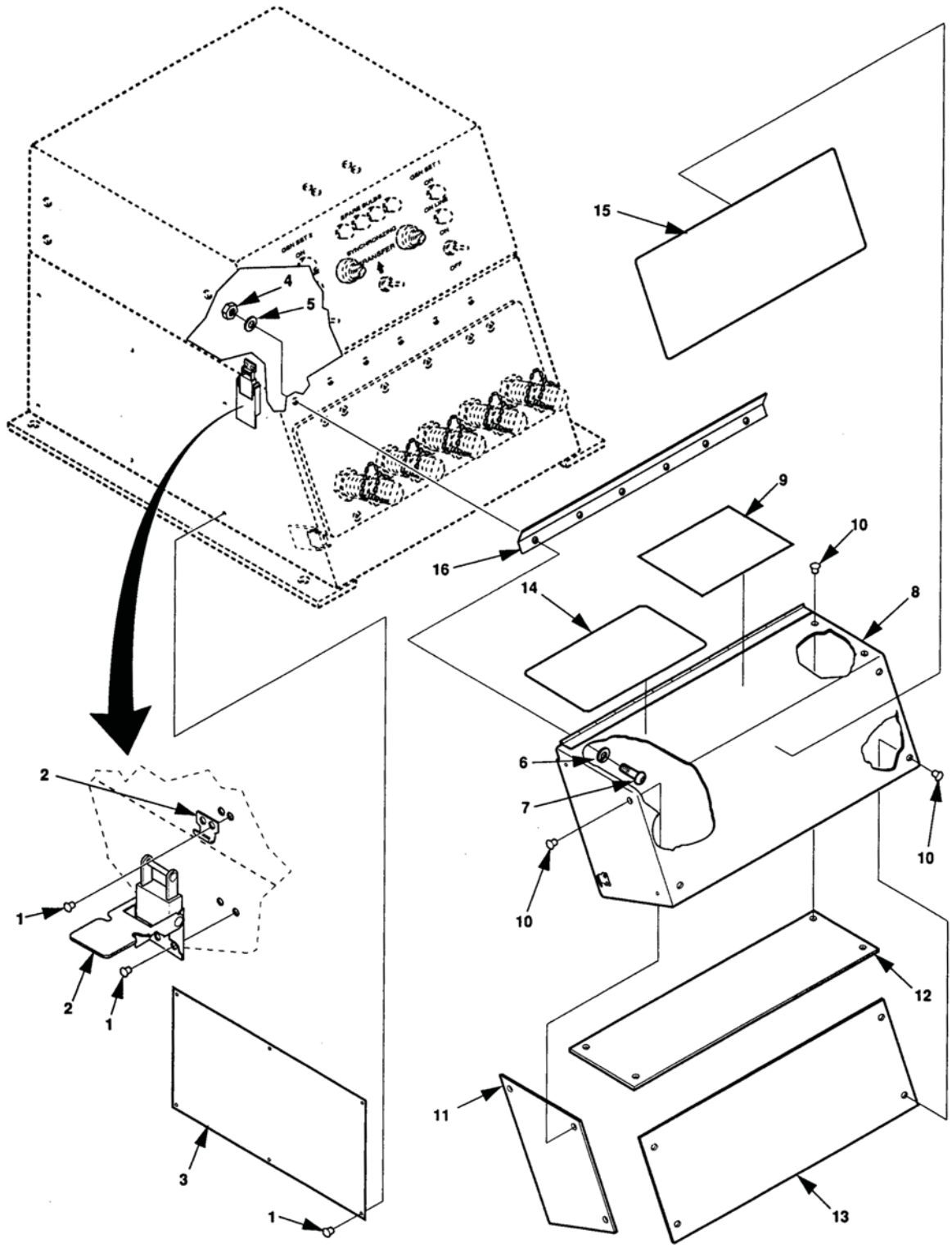

Figure 11. Load Terminal Cover (OLD).

(1) ITEM NO	(2) SMR CODE	(3) NSN	(4) CAGEC	(5) PART NUMBER	(6) DESCRIPTION AND USABLE ON CODE (UOC)	(7) QTY
					GROUP 02 ELECTRICAL SYSTEM	
					FIG. 11 LOAD TERMINAL COVER (OLD)	
1	PAFZZ		96906	MS20600AD4W3	. RIVET, BLIND UOC: YHZ, YJA	22
2	PAFZZ		94222	K3-1735-07	. CATCH, CLAMPING UOC: YHZ, YJA	4
3	MDFZZ		97403	13229E5819-1	. PLATE, IDENTIFICATION SCHEMATIC UOC: YJA	1
3	MDFZZ		97403	13229E5819-2	. PLATE, IDENTIFICATION SCHEMATIC UOC: YHZ	1
4	PAFZZ		96906	MS25649-284	. NUT, PLAIN, HEXAGON UOC: YHZ, YJA	6
5	PAFZZ		96906	MS35338-137	. WASHER, LOCK UOC: YHZ, YJA	6
6	PAFZZ		96906	MS15795-841	. WASHER, FLAT UOC: YHZ, YJA	6
7	PAFZZ		96906	MS51957-46	. SCREW, MACHINE UOC: YHZ, YJA	6
8	XDFFF		97403	13229E5649-1	. COVER, LOAD TERMINAL UOC: YHZ, YJA	1
9	MDFZZ		97403	13229E5728-1	. MARKER, WARNING UOC: YHZ, YJA	1
10	PAFZZ		96906	MS20600AD3W3	. RIVET, BLIND UOC: YHZ, YJA	18
11	MFFZZ		19099	13229E5649-1-6	. SHEET, PLASTIC MAKE FROM P/N M24768/2-S-7 (81349), 4.5X6.5 IN. REQUIRED UOC: YHZ, YJA	2
12	MFFZZ		19099	13229E5649-1-12	. SHEET, PLASTIC MAKE FROM P/N M24768/2-S-7 (81349), 5X13.5 IN. REQUIRED UOC: YHZ, YJA	1
13	MFFZZ		19099	13229E5649-1-13	. SHEET, PLASTIC MAKE FROM P/N M24768/2-S-7 (81349), 4.75X13.5 IN. REQ UOC: YHZ, YJA	1
14	MDFZZ		97403	13229E5654-1	. PLATE, IDENTIFICATION POWER PLANT OPERATING PROCEDURES UOC: YHZ, YJA	1
15	MDFZZ		97403	13229E5654-2	. PLATE, IDENTIFICATION LOAD TRANSFER PROCEDURES UOC: YHZ, YJA	1
16	XDFZZ		97403	13229E9630	. STOP, TERMINAL COVER UOC: YHZ, YJA	1

(1) ITEM NO	(2) SMR CODE	(3) NSN	(4) CAGEC	(5) PART NUMBER	(6) DESCRIPTION AND USABLE ON CODE (UOC)	(7) QTY
17	PAFZZ		94222	K3-0334-07	. STRIKE, CATCH UOC: YHZ, YJA.....	4

END OF FIGURE

OPERATOR AND FIELD MAINTENANCE

10 kW 60 AND 400 Hz TRAILER-MOUNTED POWER UNITS AND POWER PLANTS

GROUP 02 ELECTRICAL SYSTEM

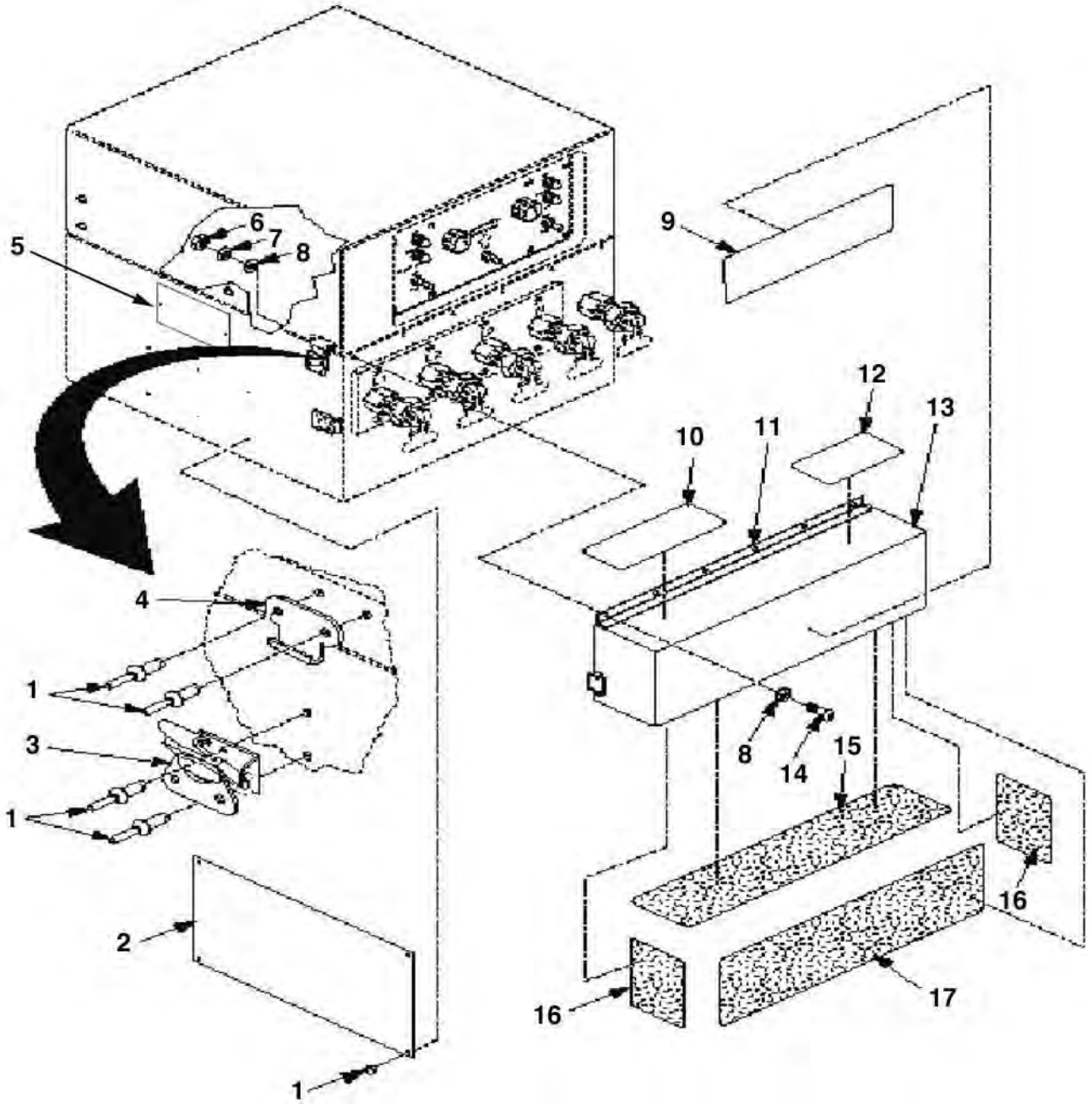

Figure 12. Load Terminal Cover (NEW).

(1) ITEM NO	(2) SMR CODE	(3) NSN	(4) CAGEC	(5) PART NUMBER	(6) DESCRIPTION AND USABLE ON CODE (UOC)	(7) QTY
					GROUP 02 ELECTRICAL SYSTEM	
					FIG. 12 LOAD TERMINAL COVER (NEW)	
1	PAFZZ		96906	MS20600AD4W3	. RIVET, BLIND UOC: YHZ, YJA	42
2	MDFZZ		97403	13229E5819-1	. PLATE, IDENTIFICATION SWITCHBOX UOC: YJA	1
2	MDFZZ		97403	13229E5819-2	. PLATE, IDENTIFICATION SWITCHBOX UOC: YHZ	1
3	PAFZZ		94222	K3-0334-07	. STRIKE, CATCH, LOWER UOC: YHZ, YJA	4
4	PAFZZ		94222	K3-1735-07	. CATCH, CLAMPING, UPPER UOC: YHZ, YJA	4
5	MDFZZ		97403	13230E7022-58	. PLATE, SWITCHBOX ITEM UNIQUE IDENTIFICATION (IUID) UOC: YHZ, YJA	1
6	PAFZZ		96906	MS25649-284	. NUT, PLAIN, HEXAGON UOC: YHZ, YJA	6
7	PAFZZ		96906	MS35338-137	. WASHER, LOCK UOC: YHZ, YJA	6
8	PAFZZ		96906	MS15795-841	. WASHER, FLAT UOC: YHZ, YJA	12
9	MDFZZ		97403	13229E5654-1	. PLATE IDENTIFICATION POWER PLANT OPERATING PROCED-URES UOC: YHZ, YJA	1
10	MDFZZ		97403	13229E5654-2	. PLATE IDENTIFICATION LOAD TRANSFER PROCEDURES UOC: YHZ, YJA	1
11	XDFZZ		97403	13229E9630	. STOP, TERMINAL COVER UOC: YHZ, YJA	1
12	MDFZZ		97403	13229E5728-1	. MARKER, WARNING UOC: YHZ, YJA	1
13	XDFFF		97403	13229E5649-1	. COVER, LOAD TERMINAL UOC: YHZ, YJA	1
14	PAFZZ		96906	MS51957-46	. SCREW, MACHINE UOC: YHZ, YJA	6
15	MFFZZ		19099	13229E5649-1-13	. SHEET, PLASTIC MAKE FROM M24768/2-S-7 (81349), 4.75X13.5 IN REQUIRED UOC: YHZ, YJA	1
16	MFFZZ		19099	13229E5649-1-6	. SHEET, PLASTIC MAKE FROM M24768/2-S-7 (81349), 4.5X6.5 IN REQUIRED, SIDE UOC: YHZ, YJA	2

(1) ITEM NO	(2) SMR CODE	(3) NSN	(4) CAGEC	(5) PART NUMBER	(6) DESCRIPTION AND USABLE ON CODE (UOC)	(7) QTY
17	MFFZZ		19099	13229E5649-1-12	. SHEET, PLASTIC MAKE FROM M24768/2-S-7 (81349), 5X13.5 IN REQUIRED UOC: YHZ, YJA.....	1

END OF FIGURE

OPERATOR AND FIELD MAINTENANCE

10 kW 60 AND 400 Hz TRAILER-MOUNTED POWER UNITS AND POWER PLANTS

GROUP 02 ELECTRICAL SYSTEM

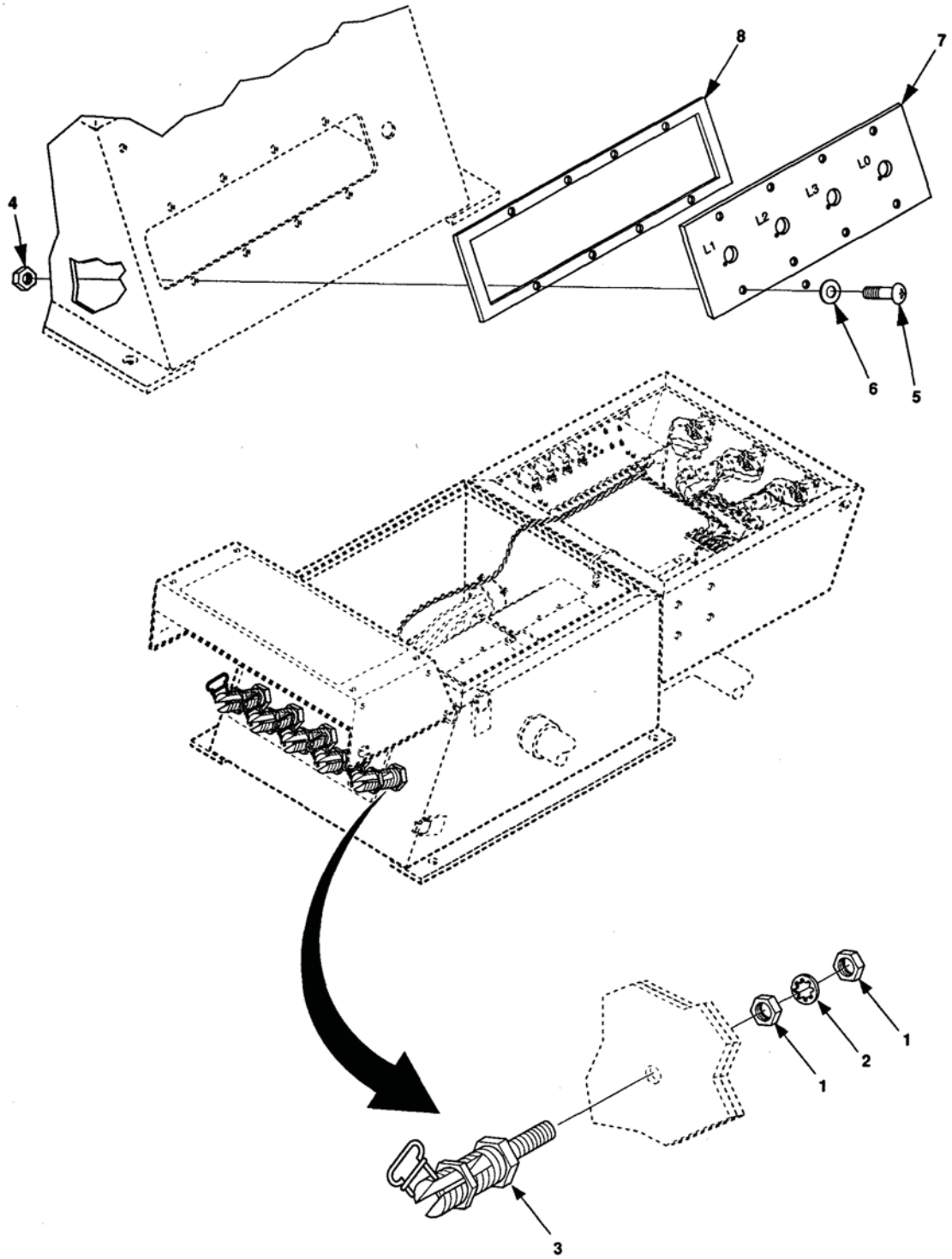

Figure 13. Load Terminal.

(1) ITEM NO	(2) SMR CODE	(3) NSN	(4) CAGEC	(5) PART NUMBER	(6) DESCRIPTION AND USABLE ON CODE (UOC)	(7) QTY
					GROUP 02 ELECTRICAL SYSTEM	
					FIG. 13 LOAD TERMINAL	
1	PAFZZ		96906	MS35691-35	. NUT, PLAIN, HEXAGON UOC: YHZ, YJA.....	10
2	PAFZZ		96906	MS35333-113	. WASHER, LOCK UOC: YHZ, YJA.....	5
3	PAFFF		96906	MS39347-4	. TERMINAL, LOAD UOC: YHZ, YJA.....	5
4	PAFZZ		96906	MS51858-5	. NUT, PLAIN, HEXAGON UOC: YHZ, YJA.....	8
5	PAFZZ		96906	MS18212-65	. SCREW, MACHINE UOC: YHZ, YJA.....	8
6	PAFZZ		96906	MS51859-5	. WASHER, FLAT UOC: YHZ, YJA.....	8
7	XDFZZ		97403	13229E5833	. PANEL, LOAD TERMINAL UOC: YHZ, YJA.....	1
8	XDFZZ		97403	13229E9631	. GASKET, LOAD TERMINAL UOC: YJA.....	1
					END OF FIGURE	

OPERATOR AND FIELD MAINTENANCE

10 kW 60 AND 400 Hz TRAILER-MOUNTED POWER UNITS AND POWER PLANTS

GROUP 02 ELECTRICAL SYSTEM

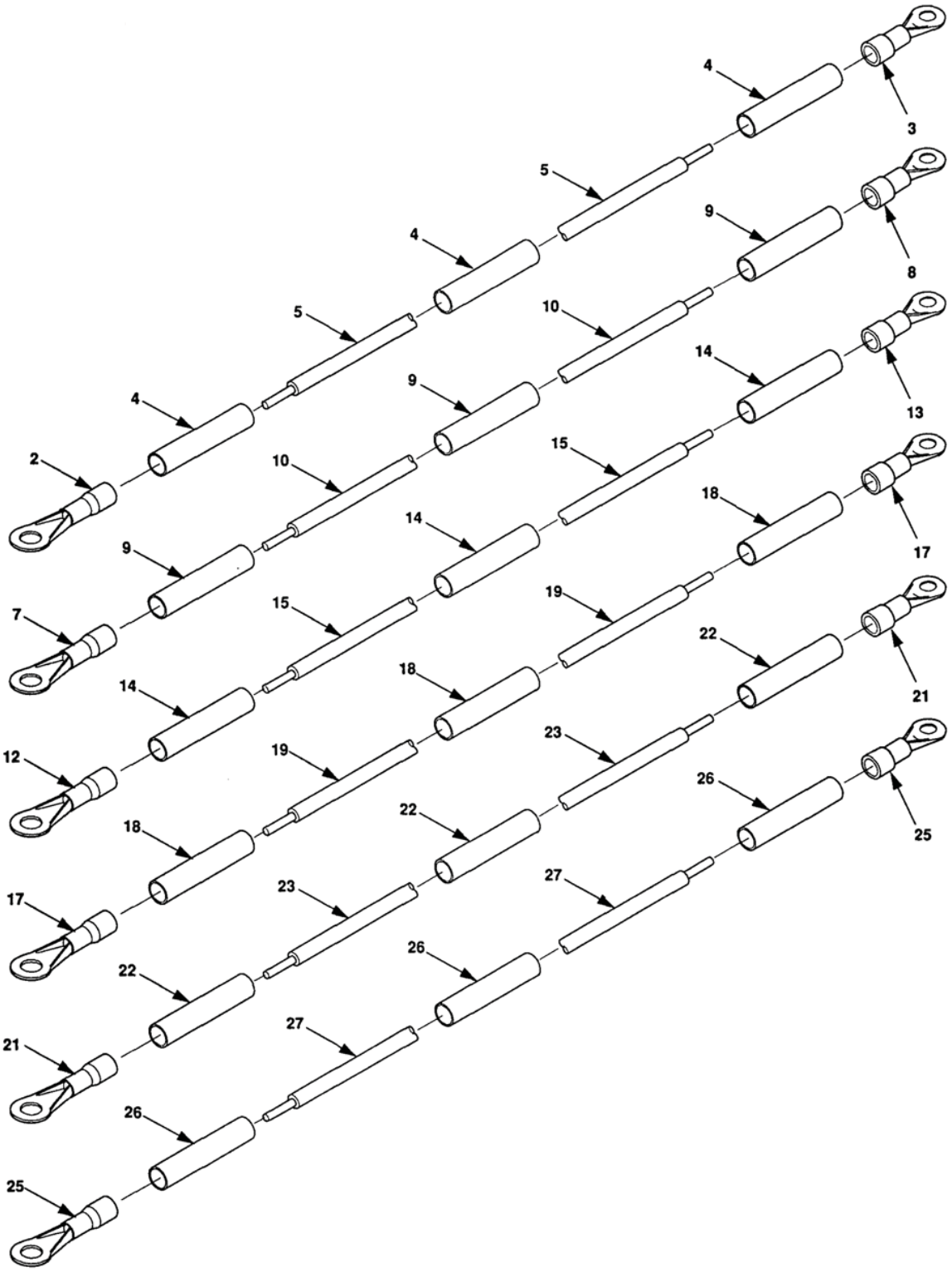

Figure 14. Electrical Leads.

(1) ITEM NO	(2) SMR CODE	(3) NSN	(4) CAGEC	(5) PART NUMBER	(6) DESCRIPTION AND USABLE ON CODE (UOC)	(7) QTY
					GROUP 02 ELECTRICAL SYSTEM	
					FIG. 14 ELECTRICAL LEADS	
1	AFFFF		97403	13229E5828-1	. LEAD, ELECTRICAL (NOT SHOWN) UOC: YHZ, YJA	1
2	PAFZZ		96906	MS20659-145	. . TERMINAL, LUG UOC: YHZ, YJA	1
3	PAFZZ		96906	MS25036-125	. . TERMINAL, LUG UOC: YHZ, YJA	1
4	MFFZZ		19099	13229E5828-1-4	. . INSULATION SLEEVING MAKE FROM P/N M5086/2-4-9 (81349), 16 IN REQUIRED UOC: YHZ, YJA	3
5	MFFZZ		19099	13229E5828-1-2	. . WIRE, ELECTRICAL MAKE FROM P/N M5086/2-4-9 (81349), 16 INCHES REQUIRED UOC: YHZ, YJA	1
6	AFFFF		97403	13229E5828-2	. LEAD, ELECTRICAL (NOT SHOWN) UOC: YHZ, YJA	1
7	PAFZZ		96906	MS20659-145	. . TERMINAL, LUG UOC: YHZ, YJA	1
8	PAFZZ		96906	MS25036-125	. . TERMINAL, LUG UOC: YHZ, YJA	1
9	MFFZZ		19099	13229E5828-2-4	. . INSULATION SLEEVING MAKE FROM P/N M23053/5-108-4 (81349), 2.5 IN. REQUIRED UOC: YHZ, YJA	3
10	MFFZZ		19099	13229E5828-2-2	. . INSULATION SLEEVING MAKE FROM P/N M5086/2-4-9 (81349), 18 IN REQUIRED UOC: YHZ, YJA	1
11	AFFFF		97403	13229E5828-3	. LEAD, ELECTRICAL (NOT SHOWN) UOC: YHZ, YJA	1
12	PAFZZ		96906	MS20659-145	. . TERMINAL, LUG UOC: YHZ, YJA	1
13	PAFZZ		96906	MS25036-125	. . TERMINAL, LUG UOC: YHZ, YJA	1
14	MFFZZ		19099	13229E5828-3-4	. . INSULATION SLEEVING MAKE FROM P/N M23053/5-108-4 (81349), 2.5 IN. REQUIRED UOC: YHZ, YJA	3
15	MFFZZ		19099	13229E5828-3-2	. . INSULATION SLEEVING MAKE FROM P/N M5086/2-4-9 (81349), 23 IN REQUIRED UOC: YHZ, YJA	1
16	AFFFF		97403	13229E5828-4	. LEAD, ELECTRICAL (NOT SHOWN) UOC: YHZ, YJA	1

(1) ITEM NO	(2) SMR CODE	(3) NSN	(4) CAGEC	(5) PART NUMBER	(6) DESCRIPTION AND USABLE ON CODE (UOC)	(7) QTY
17	PAFZZ		96906	MS20659-145	. . TERMINAL, LUG UOC: YHZ, YJA	2
18	MFFZZ		19099	13229E5828-4-4	. . INSULATION SLEEVING MAKE FROM P/N M23053/5-108-4 (81349), 2.5 IN. REQUIRED UOC: YHZ, YJA	3
19	MFFZZ		19099	13229E5828-4-2	. . INSULATION SLEEVING MAKE FROM P/N M5086/2-4-9 (81349), 12 IN REQUIRED UOC: YHZ, YJA	1
20	AFFFF		97403	13229E5828-5	. LEAD, ELECTRICAL (NOT SHOWN) UOC: YHZ, YJA	1
21	PAFZZ		96906	MS20659-145	. . TERMINAL, LUG UOC: YHZ, YJA	2
22	MFFZZ		19099	13229E5828-5-4	. . INSULATION SLEEVING MAKE FROM P/N M23053/5-108-4 (81349), 2.5 IN. REQUIRED UOC: YHZ, YJA	3
23	MFFZZ		19099	13229E5828-5-2	. . INSULATION SLEEVING MAKE FROM P/N M5086/2-4-9 (81349), 12 IN REQUIRED UOC: YHZ, YJA	1
24	AFFFF		97403	13229E5828-6	. LEAD, ELECTRICAL (NOT SHOWN) UOC: YHZ, YJA	1
25	PAFZZ		96906	MS20659-145	. . TERMINAL, LUG UOC: YHZ, YJA	2
26	MFFZZ		19099	13229E5828-6-4	. . INSULATION SLEEVING MAKE FROM P/N M23053/5-108-4 (81349), 2.5 IN. REQUIRED UOC: YHZ, YJA	3
27	MFFZZ		19099	13229E5828-6-2	. . INSULATION SLEEVING MAKE FROM P/N M5086/2-4-9 (81349), 12 IN REQUIRED UOC: YHZ, YJA	1

END OF FIGURE

OPERATOR AND FIELD MAINTENANCE

10 kW 60 AND 400 Hz TRAILER-MOUNTED POWER UNITS AND POWER PLANTS

GROUP 02 ELECTRICAL SYSTEM

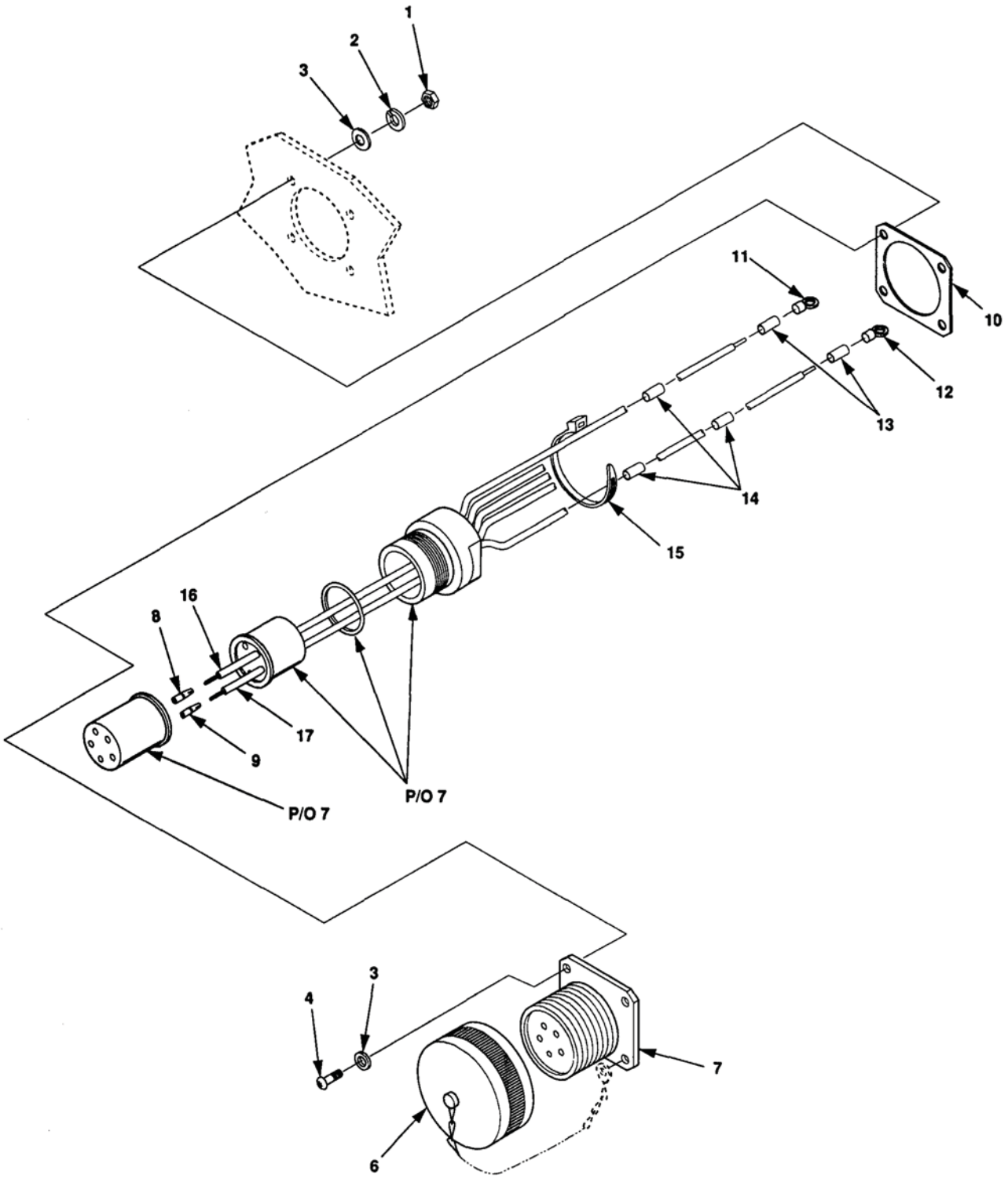

Figure 15. Output Connector Harness Assembly.

(1) ITEM NO	(2) SMR CODE	(3) NSN	(4) CAGEC	(5) PART NUMBER	(6) DESCRIPTION AND USABLE ON CODE (UOC)	(7) QTY
					GROUP 02 ELECTRICAL SYSTEM	
					FIG. 15 OUTPUT CONNECTOR HARNESS ASSEMBLY	
1	PAFZZ		96906	MS35650-304	. NUT, PLAIN, HEXAGON UOC: YHZ, YJA	4
2	PAFZZ		96906	MS35338-138	. WASHER, LOCK UOC: YHZ, YJA	4
3	PAFZZ		96906	MS15795-848	. WASHER, FLAT UOC: YHZ, YJA	8
4	PAFZZ		96906	MS51958-67	. SCREW, MACHINE UOC: YHZ, YJA	4
5	XDFFF		97403	13229E5832-1	. HARNESS ASSEMBLY OUTPUT CONNECTOR 60 Hz (NOT SHOWN) UOC: YJA	1
5	XDFFF		97403	13229E5832-2	. HARNESS ASSEMBLY OUTPUT CONNECTOR 400 Hz UOC: YHZ	1
6	PAFZZ		96906	MS90563-3C	. . COVER, ELECTRICAL CO UOC: YHZ, YJA	1
7	PAFZZ		96906	MS90555C32413S	. . CONNECTOR, RECEPTACLE UOC: YJA	1
7	PAFZZ		96906	MS90555C32413SY	. . CONNECTOR, RECEPTACLE (NOT SHOWN) UOC: YHZ	1
8	PAFZZ		81349	M39029/49-331	. . . CONTACT, ELECTRICAL UOC: YHZ, YJA	4
9	PAFZZ		81349	M39029/49-329	. . . CONTACT, ELECTRICAL UOC: YHZ, YJA	1
10	PAFZZ		59501	10-33675-36	. . . GASKET UOC: YHZ, YJA	1
11	PAFZZ		96906	MS20659-145	. . TERMINAL, LUG UOC: YHZ, YJA	4
12	PAFZZ		96906	MS20659-143	. . TERMINAL, LUG UOC: YHZ, YJA	1
13	MFFZZ		19099	13229E5832-1-6	. . . INSULATION SLEEVING MAKE FROM P/N M23053/5-108-0 (81349), 1 IN. REQUIRED UOC: YHZ, YJA	5
14	MFFZZ		19099	13229E5832-1-8	. . INSULATION SLEEVING MAKE FROM P/N M23053/5-108-4 (81349), AS REQUIRED UOC: YHZ, YJA	6
15	PAFZZ		96906	MS3367-1-9	. . STRAP, TIEDOWN, ELECT UOC: YHZ, YJA	V
16	MFFZZ		19099	13229E5832-1-2	. . WIRE, ELECTRICAL MAKE FROM P/N M5086/2-4-9 (81349), 82 INCHES REQUIRED UOC: YHZ, YJA	1

(1) ITEM NO	(2) SMR CODE	(3) NSN	(4) CAGEC	(5) PART NUMBER	(6) DESCRIPTION AND USABLE ON CODE (UOC)	(7) QTY
17	MFFZZ		19099	13229E5832-1-3	. . WIRE, ELECTRICAL MAKE FROM P/N M5086/2-6-9 (81349), 26 INCHES REQUIRED UOC: YHZ, YJA	1

END OF FIGURE

OPERATOR AND FIELD MAINTENANCE

10 kW 60 AND 400 Hz TRAILER-MOUNTED POWER UNITS AND POWER PLANTS

GROUP 02 ELECTRICAL SYSTEM

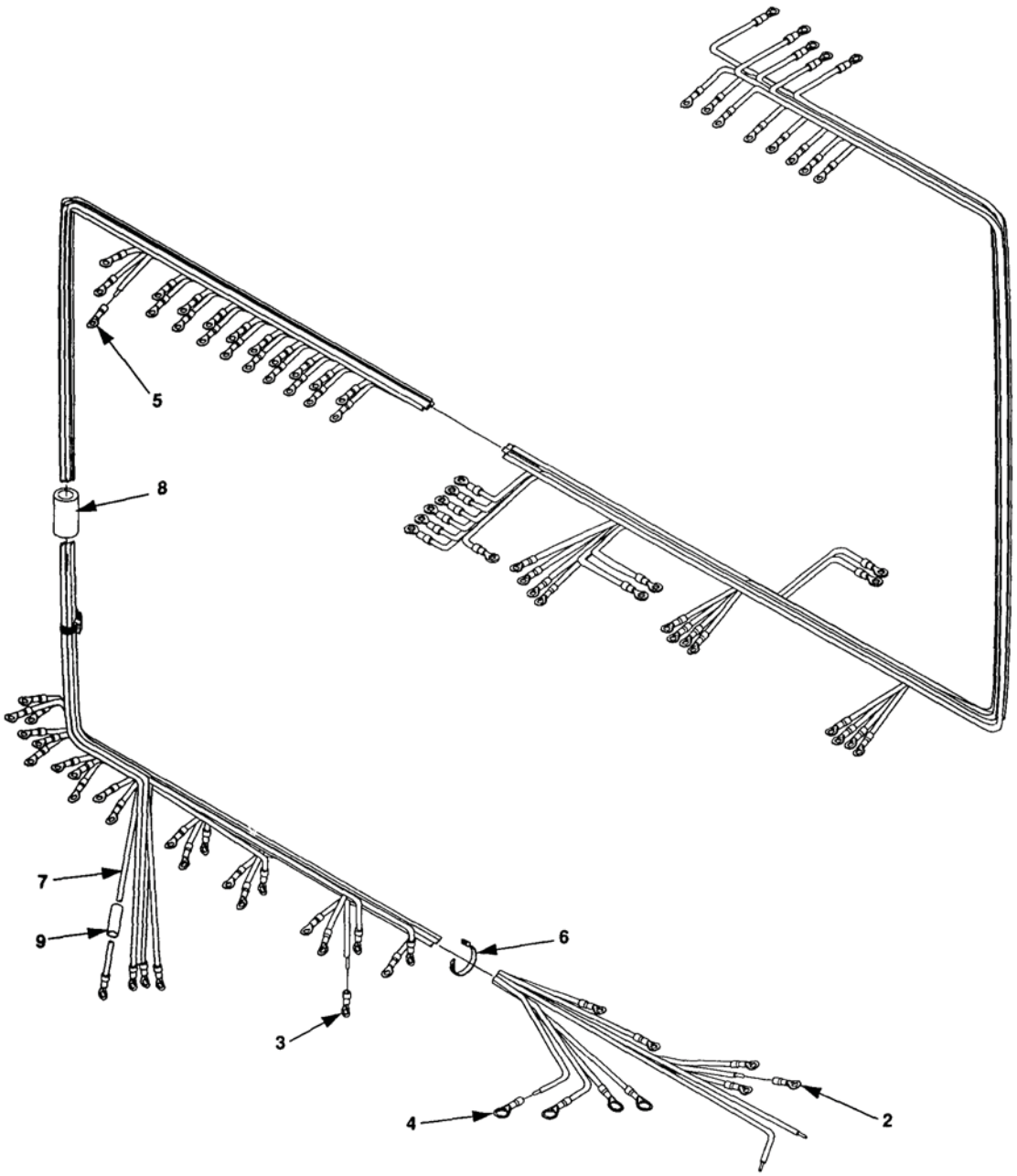

Figure 16. Switch Box Harness Assembly (Sheet 1 of 2).

WIRE LIST					
WIRE NO	TERMINATION		TERMINATION		WIRE FIND NO.
	FROM	ITEM NO.	TO	TERMINAL ITEM NO.	
1	TB1-17	3	S10-2	3	7
2	TB1-2	3	PP-4	3	7
3	TB1-3	3	PP-3	3	7
4	TB1-4	3	K2-C2	2	7
5	TB1-5	3	XDS6-2	-	7
6	TB1-6	3	K2-22	3	7
7	TB1-7	3	K1-A2	2	7
8	TB1-8	3	K1-21	3	7
9	TB1-9	3	K1-C2	2	7
10	TB1-10	3	K2-11	3	7
11	TB1-10	3	PP-6	3	7
12	TB1-11	3	PP-8	3	7
13	TB1-12	3	K2-21	3	7
14	TB1-13	3	K1-22	3	7
15	TB1-16	3	S10-5	3	7
16	-	-	-	-	-
17	TB2-5	-	K2-A2	2	7
18	-	-	-	-	-
19	TB2-4	3	K2-Y	3	7
20	XDS6-1	-	R3-1	-	-
21	XDS5-2	-	PP-3	3	7
22	XDS5-1	-	PP-1	3	7
23	TB2-2	3	K1-A2	2	7
24	-	-	-	-	-
25	S2-2	3	S10-4	3	7
26	-	-	-	-	-
27	-	-	-	-	-
28	S1-6	3	PP-7	3	7
29	S1-2	3	S10-1	3	7
30	S1-5	3	K1-12	3	7
31	S2-6	3	PP-5	3	7
32	-	-	-	-	-
33	S2-5	3	K2-12	3	7
34	K1-11	3	PP-8	3	7
35	PP-4	3	LO	4	7
36	XDS7-2	-	PP-1	3	7
37	XDS7-1	-	L3	4	7
38	K1-22	3	K2-32	3	7
39	K2-32	3	K1-A1	2	7
40	K2-22	3	K2-A2	2	7
41	K1-32	3	K2-A2	2	7
42	K1-33	3	K2-11	3	7
43	K2-Y	3	LO	4	7
44	K2-X	3	S2-3	3	7
45	K2-33	3	K1-11	3	7
46	K1-X	3	S1-3	3	7
47	K1-Y	3	LO	4	7
48	K1-Y	3	TB2-1	3	7
49	K2-A1	2	R3-2	-	7
50	PP-2	3	PP-3	3	7
51	TB1-18	3	TB2-3	3	7
52	G	5	TB2-3	3	7

Figure 16. Switch Box Harness Assembly (Sheet 2 of 2).

(1) ITEM NO	(2) SMR CODE	(3) NSN	(4) CAGEC	(5) PART NUMBER	(6) DESCRIPTION AND USABLE ON CODE (UOC)	(7) QTY
					GROUP 02 ELECTRICAL SYSTEM	
					FIG. 16 SWITCH BOX HARNESS ASSEMBLY	
1	XDFFF		97403	13229E5831	. HARN ASSY, SWITCHBOX (NOT SHOWN) UOC: YHZ, YJA	1
2	PAFZZ		96906	MS25036-110	. . TERMINAL, LUG UOC: YHZ, YJA	1
3	PAFZZ		96906	MS25036-106	. . TERMINAL, LUG UOC: YHZ, YJA	70
4	PAFZZ		96906	MS25036-155	. . TERMINAL, LUG UOC: YHZ, YJA	4
5	PAFZZ		96906	MS25036-108	. . TERMINAL, LUG UOC: YHZ, YJA	1
6	PAFZZ		96906	MS3367-4-9	. . STRAP, TIEDOWN, ELECT UOC: YHZ, YJA	V
7	MFFZZ		19099	13229E5831-1	. . WIRE, ELECTRICAL MAKE FROM P/N M22759/16-16-9 (81349), AS REQUIRED UOC: YHZ, YJA	1
8	MFFZZ		19099	13229E5831-7	. . INSULATION SLEEVING MAKE FROM P/N M23053/5-107-4 (81349), 1.5 IN. REQUIRED UOC: YHZ, YJA	1
9	MFFZZ		19099	13229E5831-9	. . INSULATION SLEEVING MAKE FROM P/N M23053/5-105-4 (81349), AS REQUIRED UOC: YHZ, YJA	104

END OF FIGURE

OPERATOR AND FIELD MAINTENANCE

10 kW 60 AND 400 Hz TRAILER-MOUNTED POWER UNITS AND POWER PLANTS

GROUP 02 ELECTRICAL SYSTEM

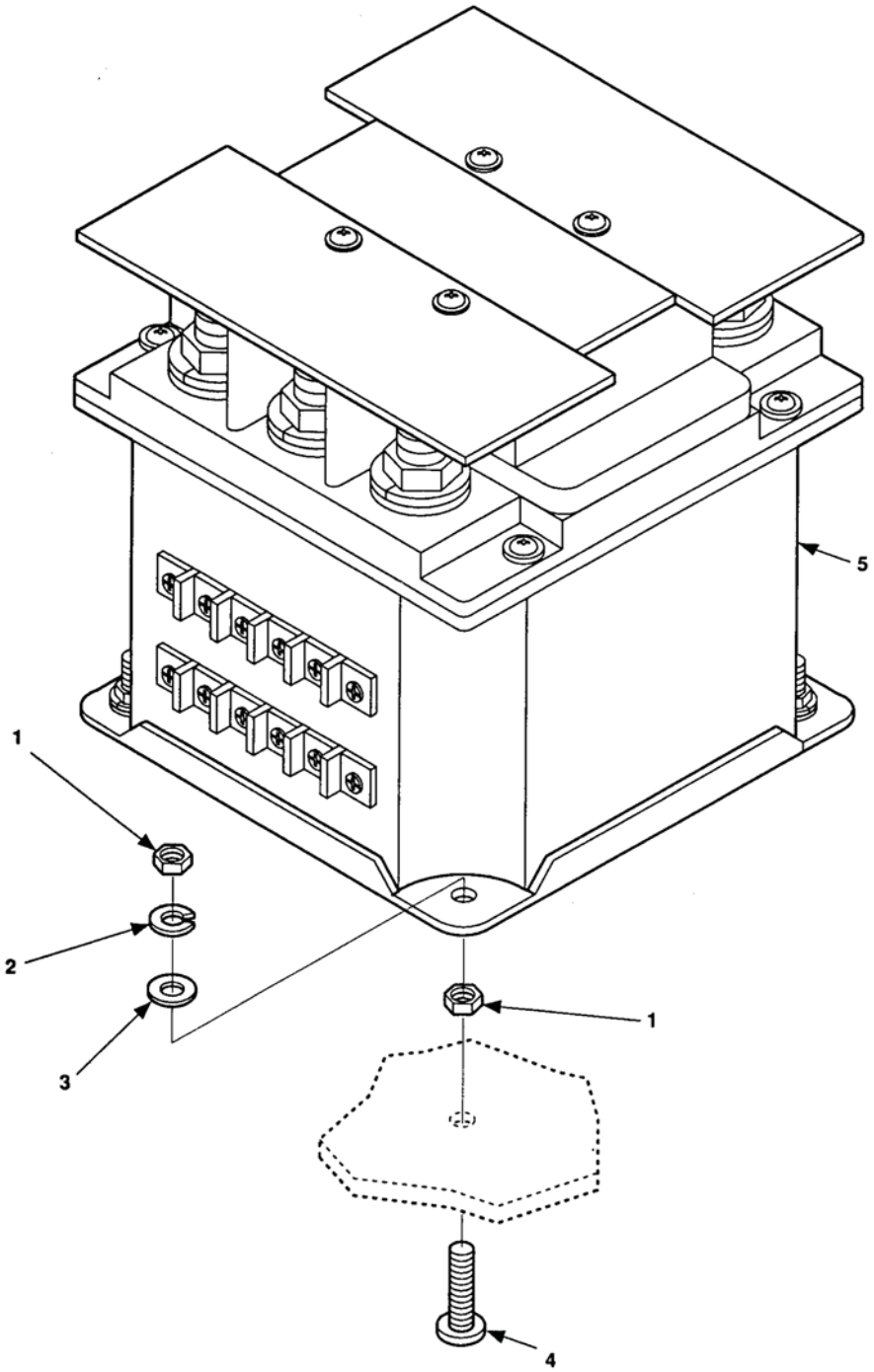

Figure 17. Contactor.

(1) ITEM NO	(2) SMR CODE	(3) NSN	(4) CAGEC	(5) PART NUMBER	(6) DESCRIPTION AND USABLE ON CODE (UOC)	(7) QTY
					GROUP 02 ELECTRICAL SYSTEM	
					FIG. 17 CONTACTOR	
1	PAFZZ		96906	MS35650-304	. NUT, PLAIN, HEXAGON UOC: YHZ, YJA	16
2	PAFZZ		96906	MS35338-138	. WASHER, LOCK UOC: YHZ, YJA	8
3	PAFZZ		96906	MS15795-848	. WASHER, FLAT UOC: YHZ, YJA	8
4	PAFZZ		96906	MS51958-67	. SCREW, MACHINE UOC: YHZ, YJA	8
5	PAFZZ		7E656	JCG-6026	. CONTACTOR UOC: YHZ, YJA	2
					END OF FIGURE	

OPERATOR AND FIELD MAINTENANCE

10 kW 60 AND 400 Hz TRAILER-MOUNTED POWER UNITS AND POWER PLANTS

GROUP 02 ELECTRICAL SYSTEM

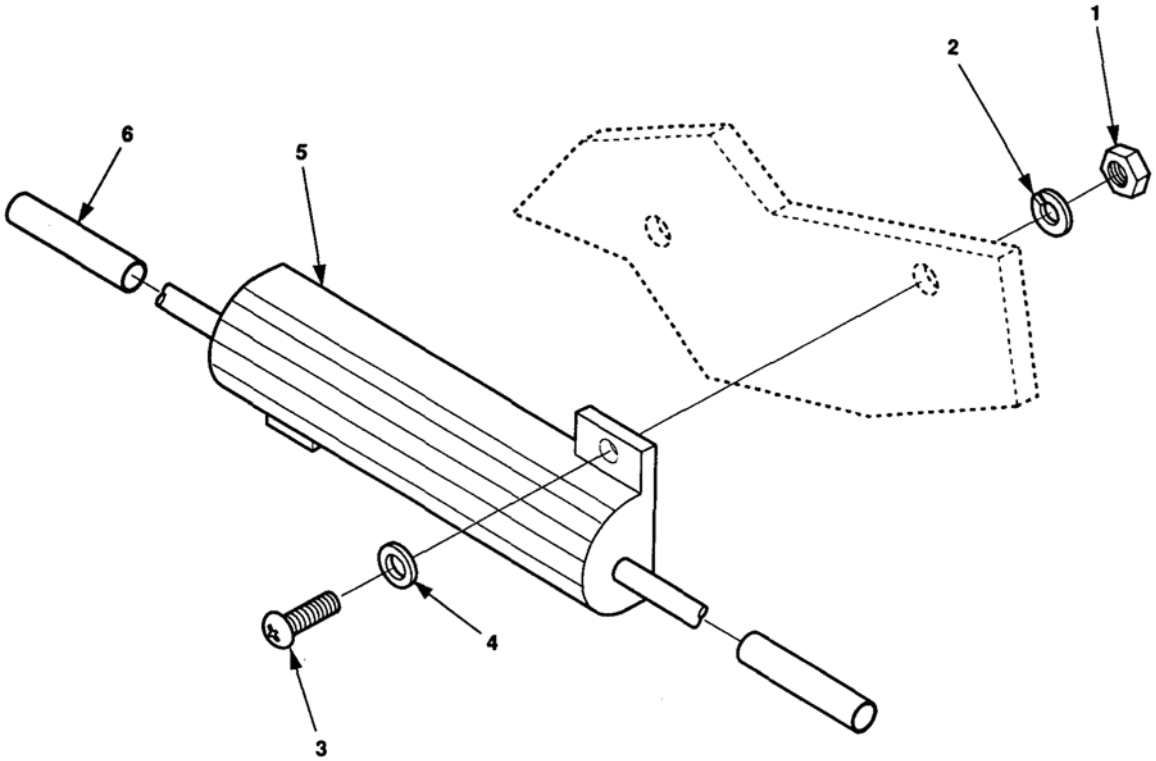

Figure 18. Resistor R3.

(1) ITEM NO	(2) SMR CODE	(3) NSN	(4) CAGEC	(5) PART NUMBER	(6) DESCRIPTION AND USABLE ON CODE (UOC)	(7) QTY
					GROUP 02 ELECTRICAL SYSTEM	
					FIG. 18 RESISTOR R3	
1	PAFZZ		96906	MS35649-244	. NUT, PLAIN, HEXAGON UOC: YHZ, YJA	2
2	PAFZZ		96906	MS35338-135	. WASHER, LOCK UOC: YHZ, YJA	2
3	PAFZZ		96906	MS51957-16	. SCREW, MACHINE UOC: YHZ, YJA	2
4	PAFZZ		88044	AN960-C4	. WASHER, FLAT UOC: YHZ, YJA	2
5	PAFZZ		81349	RER75F2491P	. RESISTOR UOC: YHZ, YJA	1
6	MFFZZ		19099	13229E5820-51	. INSULATION SLEEVING MAKE FROM P/N M23053/5-105-0 (81349), .75 IN. REQUIRED UOC: YHZ, YJA	104
					END OF FIGURE	

OPERATOR AND FIELD MAINTENANCE

10 kW 60 AND 400 Hz TRAILER-MOUNTED POWER UNITS AND POWER PLANTS

GROUP 02 ELECTRICAL SYSTEM

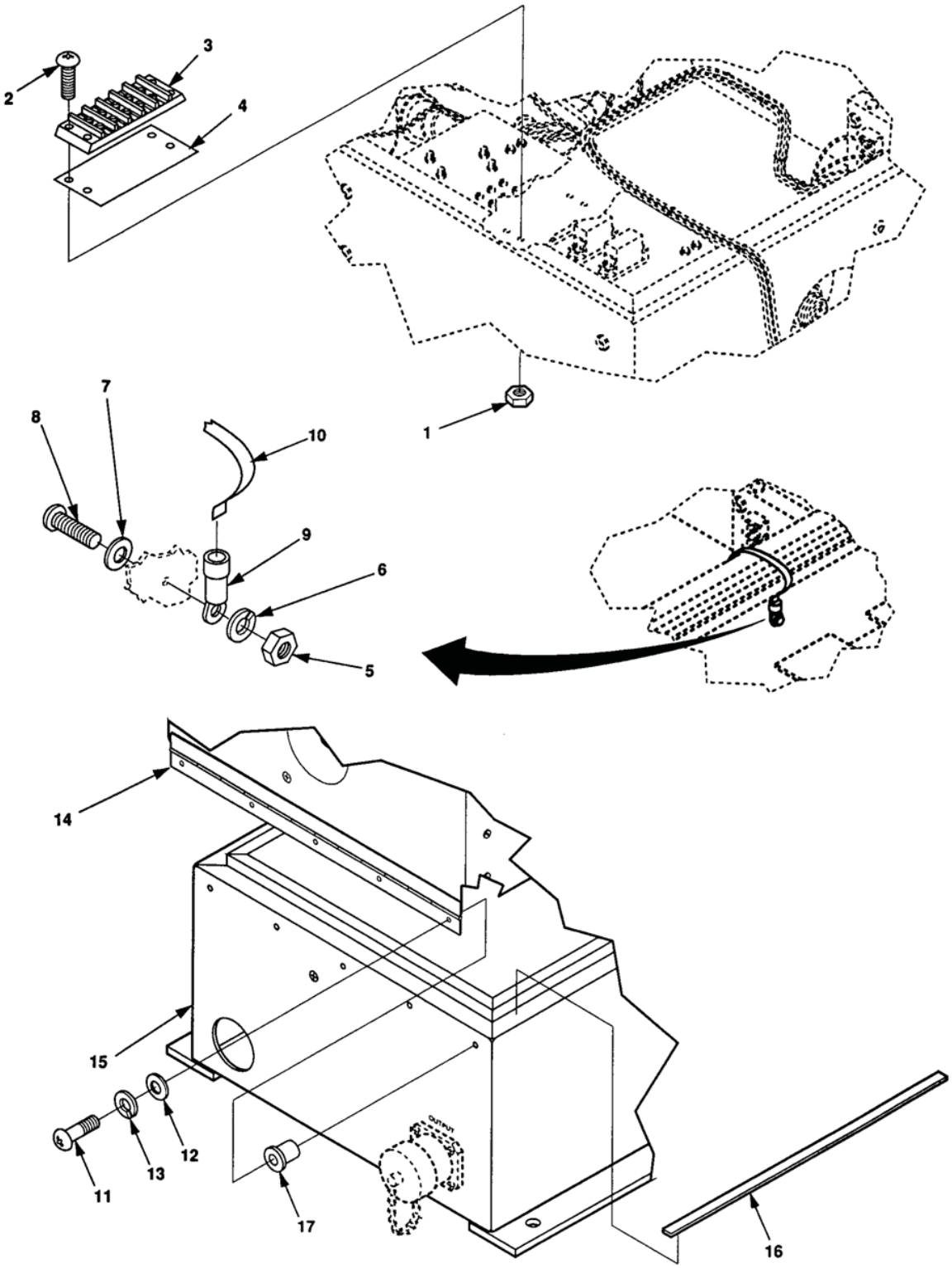

Figure 19. Switch Box Assembly.

(1) ITEM NO	(2) SMR CODE	(3) NSN	(4) CAGEC	(5) PART NUMBER	(6) DESCRIPTION AND USABLE ON CODE (UOC)	(7) QTY
					GROUP 02 ELECTRICAL SYSTEM	
					FIG. 19 SWITCH BOX ASSEMBLY	
1	PAFZZ		96906	MS35649-264	. NUT, PLAIN, HEXAGON UOC: YHZ, YJA	4
2	PAFZZ		96906	MS51957-31	. SCREW, MACHINE UOC: YHZ, YJA	4
3	PAFZZ		81349	37TB5	. TERMINAL BOARD UOC: YHZ, YJA	1
4	PAFZZ		81349	MSA37TB5	. MARKER STRIP, TERMIN UOC: YHZ, YJA	1
5	PAFZZ		96906	MS35650-304	. NUT, PLAIN, HEXAGON UOC: YHZ, YJA	2
6	PAFZZ		96906	MS35338-138	. WASHER, LOCK UOC: YHZ, YJA	2
7	PAFZZ		96906	MS15795-848	. WASHER, FLAT UOC: YHZ, YJA	2
8	PAFZZ		96906	MS51958-64	. SCREW, MACHINE UOC: YHZ, YJA	2
9	PAFZZ		96906	MS25036-119	. TERMINAL, LUG UOC: YHZ, YJA	2
10	MOFZZ		19099	13229E5820-48	. BRAID, WIRE MAKE FROM P/N QQB575F30T0437 (81348), 8 INCHES REQUIRED UOC: YHZ, YJA	1
11	PAFZZ		96906	MS51957-46	. SCREW, MACHINE UOC: YHZ, YJA	5
12	PAFZZ		96906	MS15795-841	. WASHER, FLAT UOC: YHZ, YJA	5
13	PAFZZ		96906	MS35338-137	. WASHER, LOCK UOC: YHZ, YJA	5
14	XDFZZ		97403	13229E5822	. COVER, SWITCHBOX UOC: YHZ, YJA	1
15	XDFFF		97403	13229E5821	. ENCLOSURE, SWITCHBOX UOC: YHZ, YJA	1
16	MOFZZ		19099	13229E5821-4	. STRIP, RUBBER MAKE FROM P/N 2B2B2C1F2 (81346), 14 INCHES REQUIRED UOC: YHZ, YJA	4
17	PAFZZ		96906	MS27130-CR93	. NUT, PLAIN, BLIND RIVET UOC: YHZ, YJA	5
					END OF FIGURE	

OPERATOR AND FIELD MAINTENANCE

10 kW 60 AND 400 Hz TRAILER-MOUNTED POWER UNITS AND POWER PLANTS

GROUP 03 ACCESSORIES

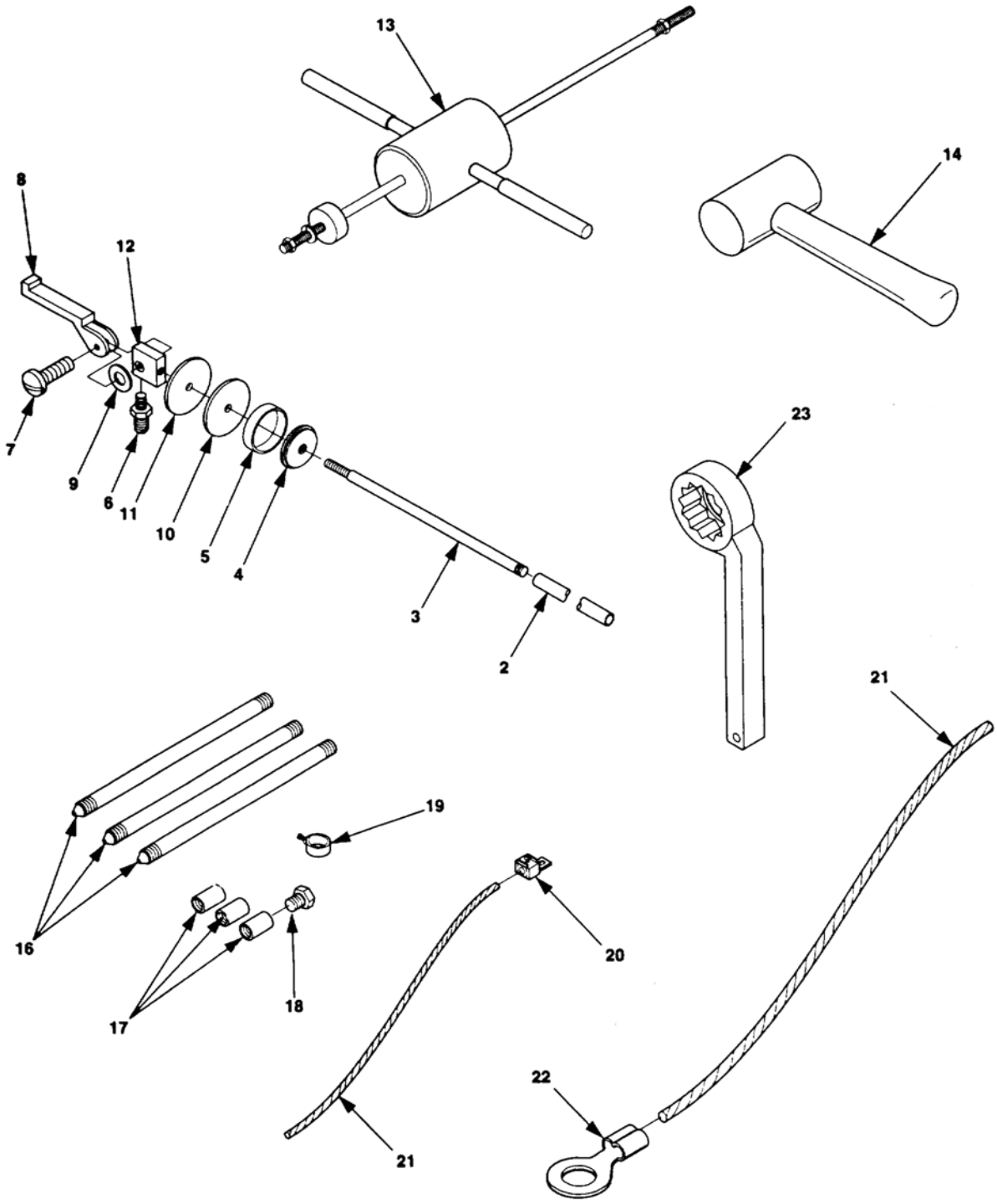

Figure 20. Accessories.

(1) ITEM NO	(2) SMR CODE	(3) NSN	(4) CAGEC	(5) PART NUMBER	(6) DESCRIPTION AND USABLE ON CODE (UOC)	(7) QTY
					GROUP 03 ACCESSORIES	
					FIG. 20 ACCESSORIES	
1	PAFFF		97403	13211E7541	. ADAPTER, CONTAINER (NOT SHOWN) UOC: FMH, YFK, YFL, YFK, YHZ, YJA	1
2	PAFZZ		97403	13211E7542	. . PIPE, METALLIC UOC: FMH, YFK, YFL, YFK, YHZ, YJA	1
3	PAFZZ		97403	13211E7543	. . PIPE, METALLIC UOC: FMH, YFK, YFL, YFK, YHZ, YJA	1
4	XAFZZ		97403	13211E7544	. . WASHER, RECESSED UOC: FMH, YFK, YFL, YFK, YHZ, YJA	1
5	PAFZZ		97403	13211E7546	. . GASKET UOC: FMH, YFK, YFL, YFK, YHZ, YJA	1
6	PAFZZ		88044	AN816-5-4	. . ADAPTER, STRAIGHT, PI UOC: FMH, YFK, YFL, YFK, YHZ, YJA	1
7	PAFZZ		00141	4328	. . SCREW, SHOULDER UOC: FMH, YFK, YFL, YFK, YHZ, YJA	2
8	XAFZZ		97403	13200E6363	. . CLAMP, STRAINER UOC: FMH, YFK, YFL, YFK, YHZ, YJA	1
9	PAFZZ		96906	MS35335-60	. . WASHER, LOCK UOC: FMH, YFK, YFL, YFK, YHZ, YJA	2
10	XAFZZ		97403	13211E7547	. . WASHER, FLAT UOC: FMH, YFK, YFL, YFK, YHZ, YJA	1
11	XAFZZ		97403	13200E6361	. . WASHER, FLAT UOC: FMH, YFK, YFL, YFK, YHZ, YJA	1
12	XAFZZ		97403	13211E7548	. . HEAD UOC: FMH, YFK, YFL, YFK, YHZ, YJA	1
13	PAFZZ		58536	P74-144	. SLIDE HAMMER, GROUND UOC: FMH, YFK, YFL, YFK, YHZ, YJA	1
14	PAFZZ		80244	GGG-H-86, TY10CL1	. HAMMER, HAND UOC: FMH, YFK, YFL, YFK, YHZ, YJA	1
15	PAFZZ		15277	FS0216B122-1	. ROD, GROUND WITH ATTACHMENTS (NOT SHOWN) UOC: FMH, YFK, YFL, YFK, YHZ, YJA	1

(1) ITEM NO	(2) SMR CODE	(3) NSN	(4) CAGEC	(5) PART NUMBER	(6) DESCRIPTION AND USABLE ON CODE (UOC)	(7) QTY
16	PAFZZ		56681	HLP1053A	. . ROD, GROUND UOC: FMH, YFK, YFL, YFK, YHZ, YJA	1
17	PAFZZ		OBKK8	GRC 50	. . COUPLING, GROUND ROD UOC: FMH, YFK, YFL, YFK, YHZ, YJA	3
18	PAFZZ		73616	GRB58	. . DRIVE HEAD UOC: FMH, YFK, YFL, YFK, YHZ, YJA	1
19	PAFZZ		04655	70-801074	. . CLAMP, ELECTRICAL UOC: FMH, YFK, YFL, YFK, YHZ, YJA	1
20	PAFZZ		01667	CBA-70	. . TERMINAL, LUG UOC: FMH, YFK, YFL, YFK, YHZ, YJA	1
21	MOFZZ		81348	QQW343CO6B1B	. . WIRE, ELECTRICAL 6 FEET REQUIRED UOC: FMH, YFK, YFL, YFK, YHZ, YJA	2
22	PAFZZ		96906	MS25036-122	. TERMINAL, LUG UOC: FMH, YFK, YFL, YFK, YHZ, YJA	1
23	PAFZZ		30554	Cle-403001	. WRENCH, BOX UOC: FMH, YFK, YFL, YFK, YHZ, YJA	1

END OF FIGURE

OPERATOR AND FIELD MAINTENANCE

10 kW 60 AND 400 Hz TRAILER-MOUNTED POWER UNITS AND POWER PLANTS

GROUP 03 ACCESSORIES

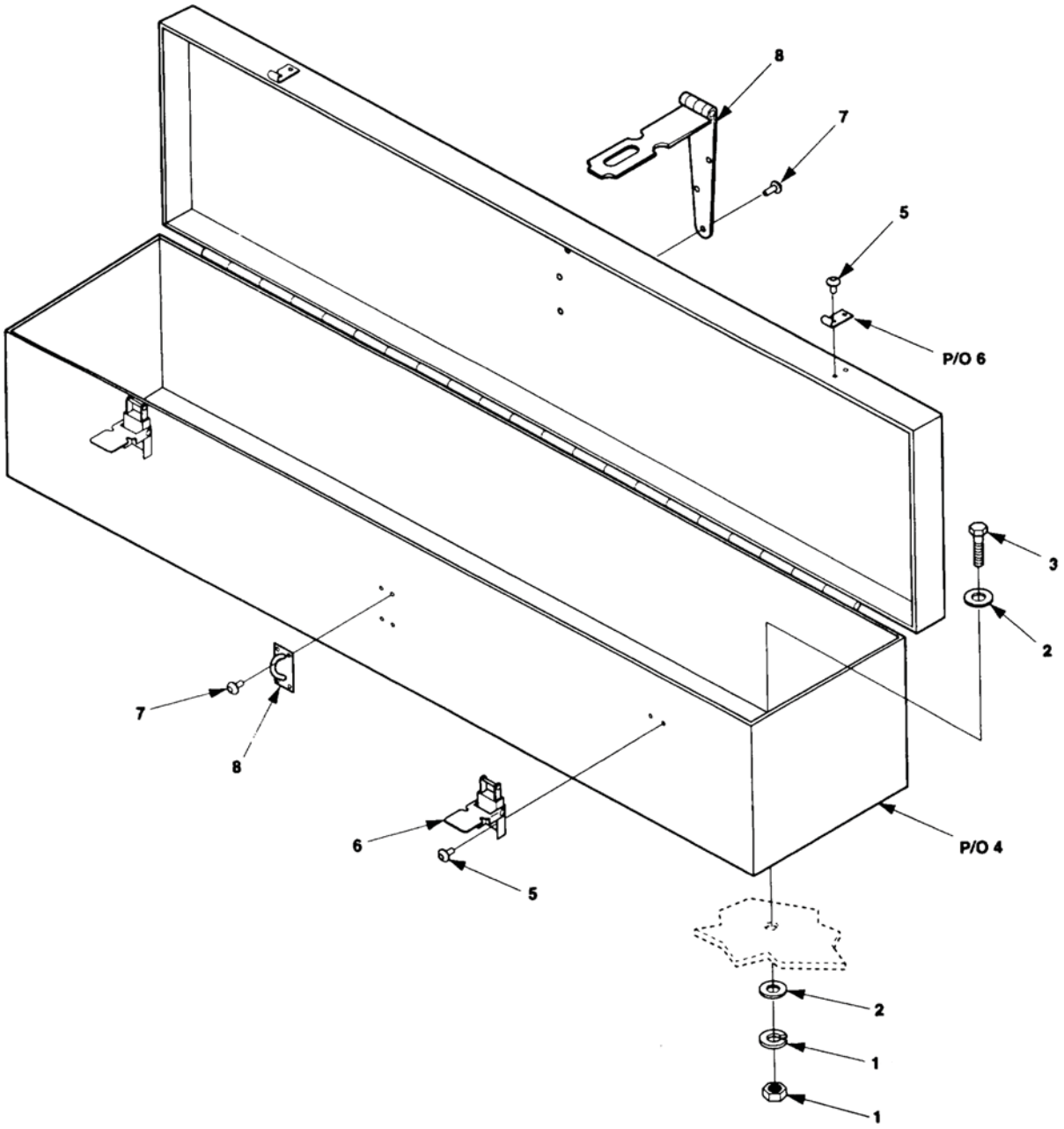

Figure 21. Accessory Box.

(1) ITEM NO	(2) SMR CODE	(3) NSN	(4) CAGEC	(5) PART NUMBER	(6) DESCRIPTION AND USABLE ON CODE (UOC)	(7) QTY
					GROUP 03 ACCESSORIES	
					FIG. 21 ACCESSORY BOX	
1	PAFZZ		96906	MS51922-9	. NUT, SELF-LOCKING, HE UOC: YFK, YHZ, YFL, YJA	4
1	PAFZZ		96906	MS356503314	. NUT, PLAIN, HEX UOC: YFK, YHZ, YFL, YJA	4
2	PAFZZ		96906	MS51412-25	. WASHER, FLAT UOC: YFK, YHZ, YFL, YJA	8
3	PAFZZ		80204	B1821BHO31C100N	. BOLT, MACHINE UOC: YFK, YHZ, YFL, YJA	4
4	XDFFF		97403	13229E7946	. BOX, ACCESSORY (NOT SHOWN) UOC: YFK, YHZ, YFL, YJA	1
5	PAFZZ		96906	MS20613-4P5	. . RIVET, SOLID UOC: YFK, YHZ, YFL, YJA	8
6	PAFZZ		83014	H2638-1	. . CATCH, CLAMPING UOC: YFK, YHZ, YFL, YJA	2
7	PAFZZ		96906	MS20427-4C6	. . RIVET, SOLID UOC: YFK, YHZ, YFL, YJA	8
8	PAFZZ		96906	MS27969-4	. . HASP, HINGED UOC: YFK, YHZ, YFL, YJA	1
					END OF FIGURE	

OPERATOR AND FIELD MAINTENANCE

10 kW 60 AND 400 Hz TRAILER-MOUNTED POWER UNITS AND POWER PLANTS

GROUP 03 ACCESSORIES

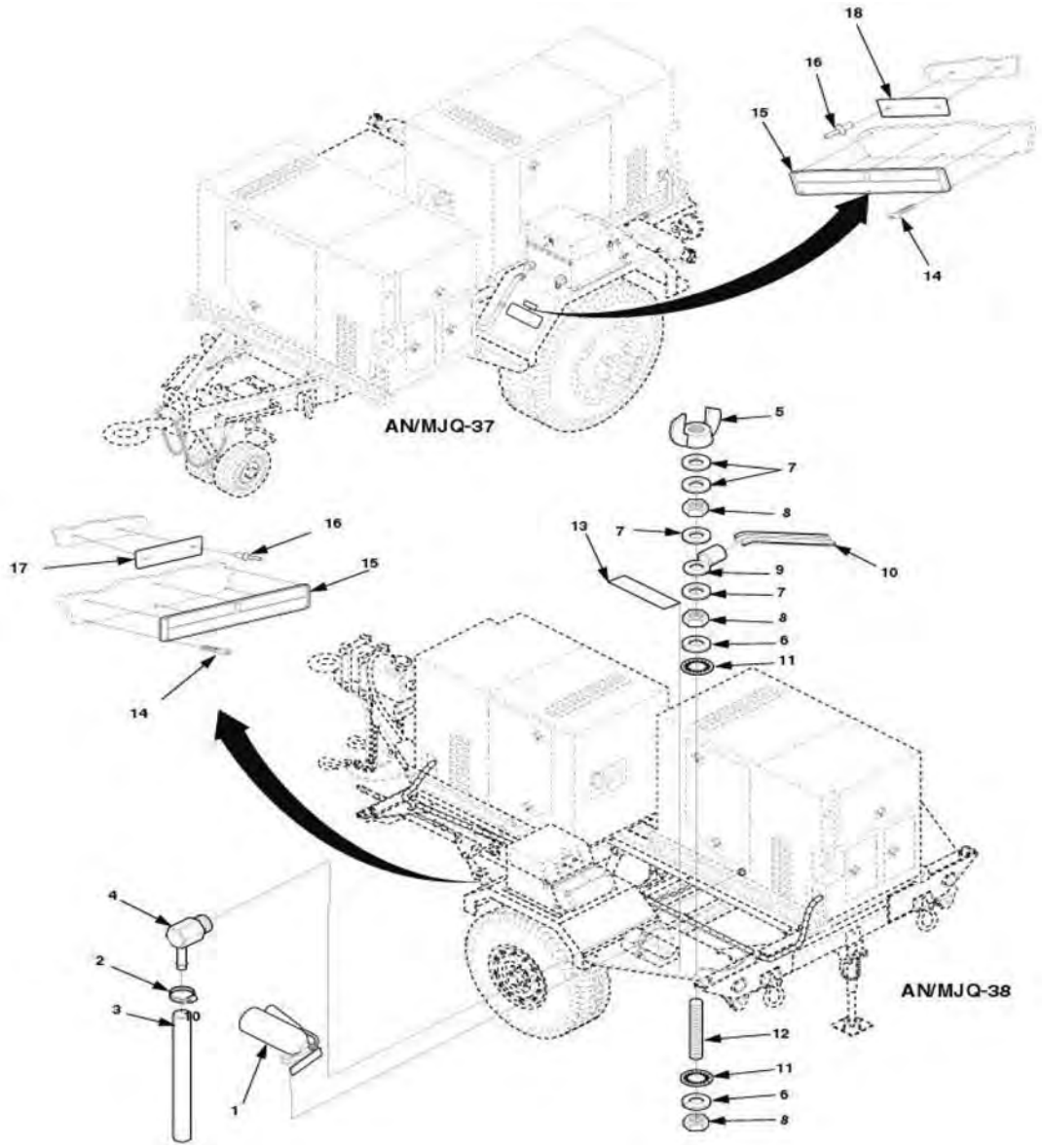

Figure 22. Power Plant Fire Extinguisher, Oil Drain and Ground Wire.

(1) ITEM NO	(2) SMR CODE	(3) NSN	(4) CAGEC	(5) PART NUMBER	(6) DESCRIPTION AND USABLE ON CODE (UOC)	(7) QTY
					GROUP 03 ACCESSORIES	
					FIG. 22 POWER PLANT FIRE EXTINGUISHER, OIL DRAIN AND GROUND WIRE	
1	PAFZZ		99251	3304695-1	. EXTINGUISHER, FIRE UOC: YHZ, YJA	2
2	PAFZZ		96906	MS35842-11	. CLAMP, HOSE UOC: YHZ, YJA	1
3	MOFZZ		19099	13229E5670-41	. HOSE, NONMETALLIC MAKE FROM P/N M6000E00200 (81349), 20 INCHES REQUIRED UOC: YHZ, YJA	1
4	PAFZZ		96906	MS24519-7	. ELBOW, PIPE TO HOSE UOC: YHZ, YJA	1
5	PAFZZ		96906	MS35425-75	. NUT, PLAIN, WING UOC: YHZ, YJA	1
6	PAFZZ		96906	MS35338-103	. WASHER, LOCK UOC: YHZ, YJA	2
7	PAFZZ		88044	AN961-616T	. WASHER, FLAT UOC: YHZ, YJA	4
8	PAFZZ		96906	MS16203-27	. NUT, PLAIN, HEXAGON UOC: YHZ, YJA	3
9	PAFZZ		96906	MS25036-122	. TERMINAL, LUG UOC: YHZ, YJA	1
10	PAFZZ		19099	13229E5670-24	. WIRE, ELECTRICAL MAKE FROM P/N QQW343C06B1B (81348), AS REQUIRED UOC: YHZ, YJA	1
11	PAFZZ		96906	MS35333-130	. WASHER, LOCK UOC: YHZ, YJA	2
12	PAFZZ		97403	13214E1223	. STUD, CONTINUOUS THR UOC: YHZ, YJA	1
13	MOFZZ		97403	13205E4918	. PLATE, IDENTIFICATION UOC: YHZ, YJA	1
14	PAFZZ		81349	M24243/1B403	. RIVET, BLIND UOC: YHZ, YJA	6
15	MOFZZ		97403	13229E566-4	. PLATE, IDENTIFICATION TRANSPORTATION DATA UOC: YJA	1
15	MOFZZ		97403	13229E5666-4	. PLATE, IDENTIFICATION TRANSPORTATION DATA UOC: YHZ	1
16	PAFZZ		97403	13230E6383-4-3	. RIVET, BLIND, UNIVERSAL UOC: YHZ, YJA	4
17	MDFZZ		97403	13230E7022-29	. PLATE, IDENTIFICATION UOC: YHZ	1

(1) ITEM NO	(2) SMR CODE	(3) NSN	(4) CAGEC	(5) PART NUMBER	(6) DESCRIPTION AND USABLE ON CODE (UOC)	(7) QTY
18	MDFZZ		97403	13230E7022-28	. PLATE, IDENTIFICATION UOC: YHZ	1

END OF FIGURE

OPERATOR AND FIELD MAINTENANCE

10 kW 60 AND 400 Hz TRAILER-MOUNTED POWER UNITS AND POWER PLANTS

GROUP 03 ACCESSORIES

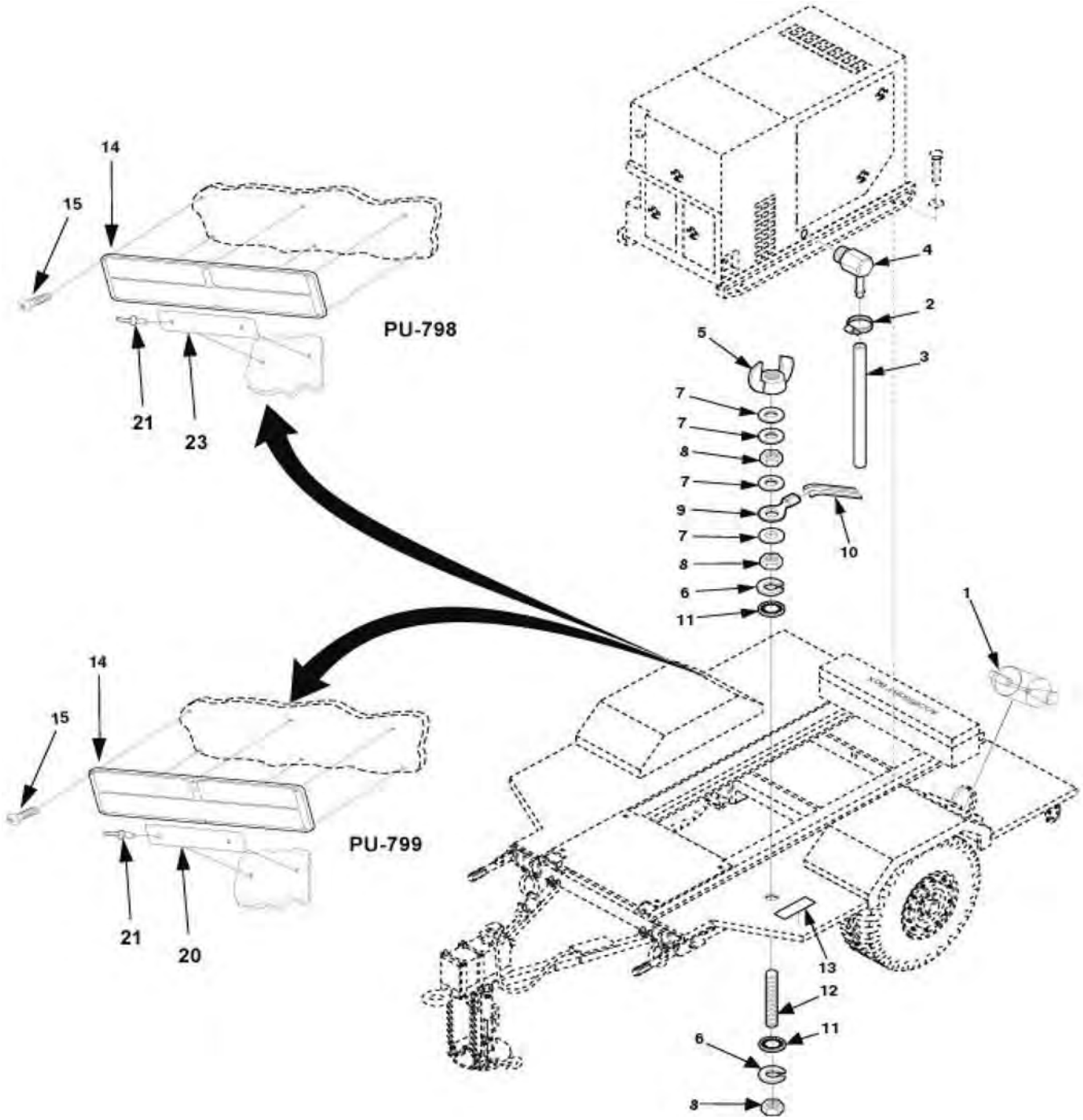

Figure 23. Power Unit Fire Extinguisher, Oil Drain and Ground Wire (Sheet 1 of 2).

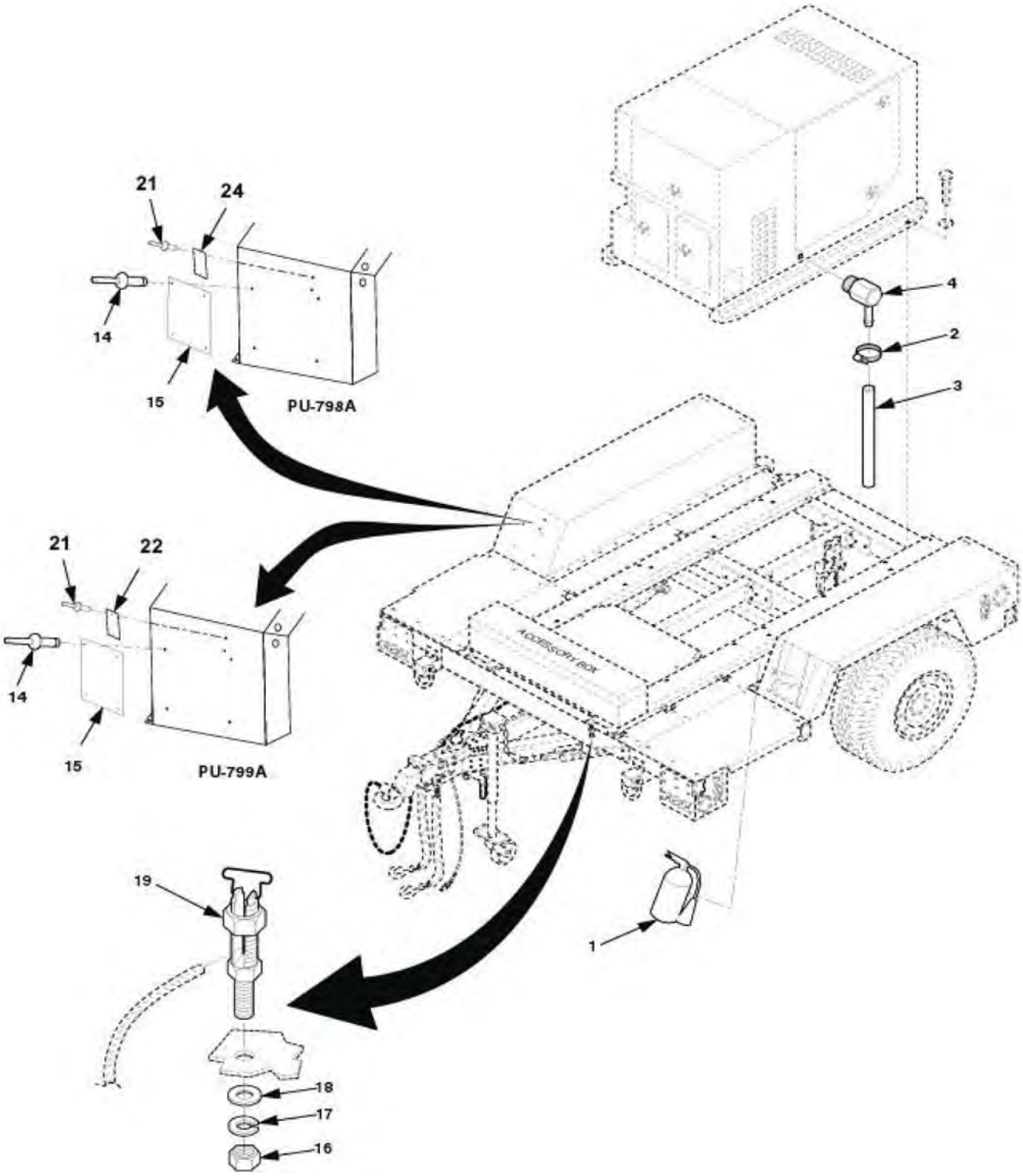

Figure 23. Power Unit Fire Extinguisher, Oil Drain and Ground Wire (Sheet 2 of 2).

(1) ITEM NO	(2) SMR CODE	(3) NSN	(4) CAGEC	(5) PART NUMBER	(6) DESCRIPTION AND USABLE ON CODE (UOC)	(7) QTY
					GROUP 03 ACCESSORIES	
					FIG. 23 POWER UNIT FIRE EXTINGUISHER, OIL DRAIN AND GROUND WIRE	
1	PAFZZ		58536	C54210-0007ACLH	. EXTINGUISHER, FIRE UOC: YFK, YFL, FMH, FMJ	1
2	PAFZZ		96906	MS35842-11	. CLAMP, HOSE UOC: YFK, YFL, FMH, FMJ	1
3	MOFZZ		81349	M6000E00200	. HOSE, NONMETALLIC 20 INCHES REQUIRED UOC: YFK, YFL, FMH, FMJ	1
4	PAFZZ		96906	MS24519-7	. ELBOW, PIPE TO HOSE UOC: YFK, YFL, FMH, FMJ	1
5	PAFZZ		96906	MS354519-7	. NUT, PLAIN, WING UOC: YFK, YFL	1
6	PAFZZ		96906	MS35338-103	. WASHER, LOCK UOC: YFK, YFL	2
7	PAFZZ		88044	AN961-616T	. WASHER, FLAT UOC: YFK, YFL	4
8	PAFZZ		96906	MS16203-27	. NUT, PLAIN, HEXAGON UOC: YFK, YFL	3
9	PAFZZ		96906	MS25036-122	. TERMINAL, LUG UOC: YFK, YFL	1
10	MOFZZ		81348	QQW343C06B1B	. WIRE, ELECTRICAL MAKE AS REQUIRED UOC: YFK, YFL	1
11	PAFZZ		96906	MS35333-110	. WASHER, LOCK UOC: YFK, YFL	2
12	PAFZZ		97403	13214E1223	. STUD, CONTINUOUS THR UOC: YFK, YFL	1
13	MDFZZ		97403	13205E4918	. PLATE, IDENTIFICATION UOC: YFK, YFL	1
14	PAFZZ		34149	M24243/1B403	. RIVET, BLIND UOC: YFK, YFL	6
14	PAFZZ		07707	AD45ABS	. RIVET, BLIND UOC: FMH, FMJ	4
15	MDFZZ		97403	13229E5666-14	. PLATE, IDENTIFICA-TION TRANSPORTATION DATA UOC: YFL.....	1
15	MDFZZ		97403	13229E5666-15	. PLATE, IDENTIFICA-TION TRANSPORTATION DATA UOC: YFK	1
15	MDFZZ		30554	13230E6531	. PLATE SHIPPING DATA/ IDENTIFICATION UOC: FMJ	1
15	MDFZZ		30554	13230E6541	. PLATE SHIPPING DATA/ IDENTIFICATION UOC: FMH.....	1
16	PAFZZ		96906	MS35691-3	. NUT, PLAIN, HEXAGON UOC: FMH, FMJ	1

(1) ITEM NO	(2) SMR CODE	(3) NSN	(4) CAGEC	(5) PART NUMBER	(6) DESCRIPTION AND USABLE ON CODE (UOC)	(7) QTY
17	PAFZZ		96906	MS35338-158	. WASHER, LOCK UOC: FMH, FMJ	1
18	PAFZZ		96906	MS15795-810	. WASHER, FLAT UOC: FMH, FMJ	1
19	PAFZZ		96906	MS39347-2	. TERMINAL, STUD UOC: FMH, FMJ	1
20	MDFZZ		97403	13230E7022-09	. PLATE, IDENTIFICATION UOC: FMH, YFT	1
21	PAFZZ		97403	1320E6383-4-3	. RIVET, BLIND, UNIVERSAL UOC: FMH, YFT	8
22	MDFZZ		97403	13230E7022-10	. PLATE, IDENTIFICATION UOC: FMH, YFT	1
23	MDFZZ		97403	13230E7022-07	. PLATE, IDENTIFICATION UOC: FMH, YFT	1
24	MDFZZ		97403	13230E7022-08	. PLATE, IDENTIFICATION UOC: FMH, YFT	1

END OF FIGURE

OPERATOR AND FIELD MAINTENANCE

10 kW 60 AND 400 Hz TRAILER-MOUNTED POWER UNITS AND POWER PLANTS

GROUP 04 TRAILER ASSEMBLY

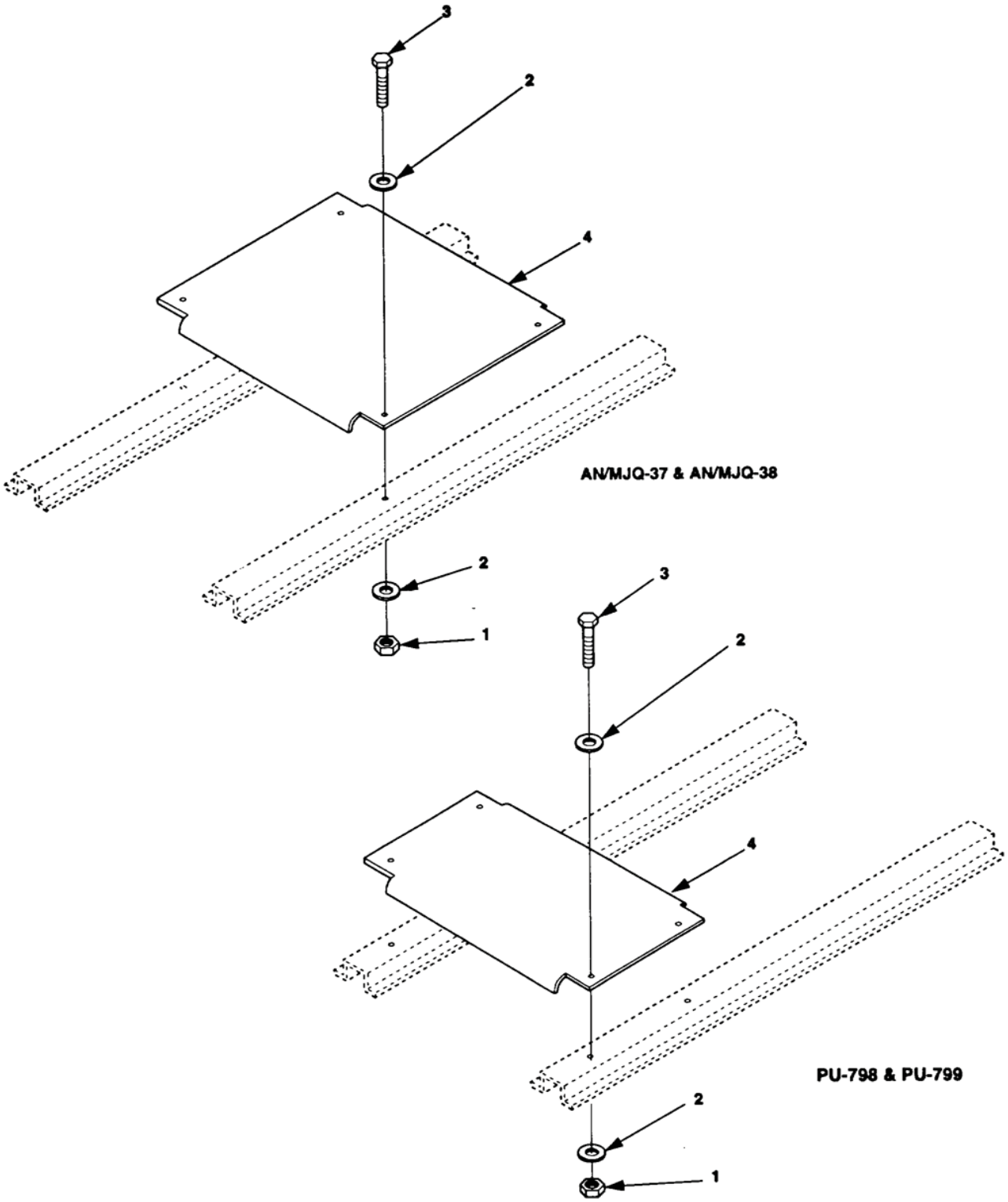

Figure 24. Platforms (Sheet 1 of 2).

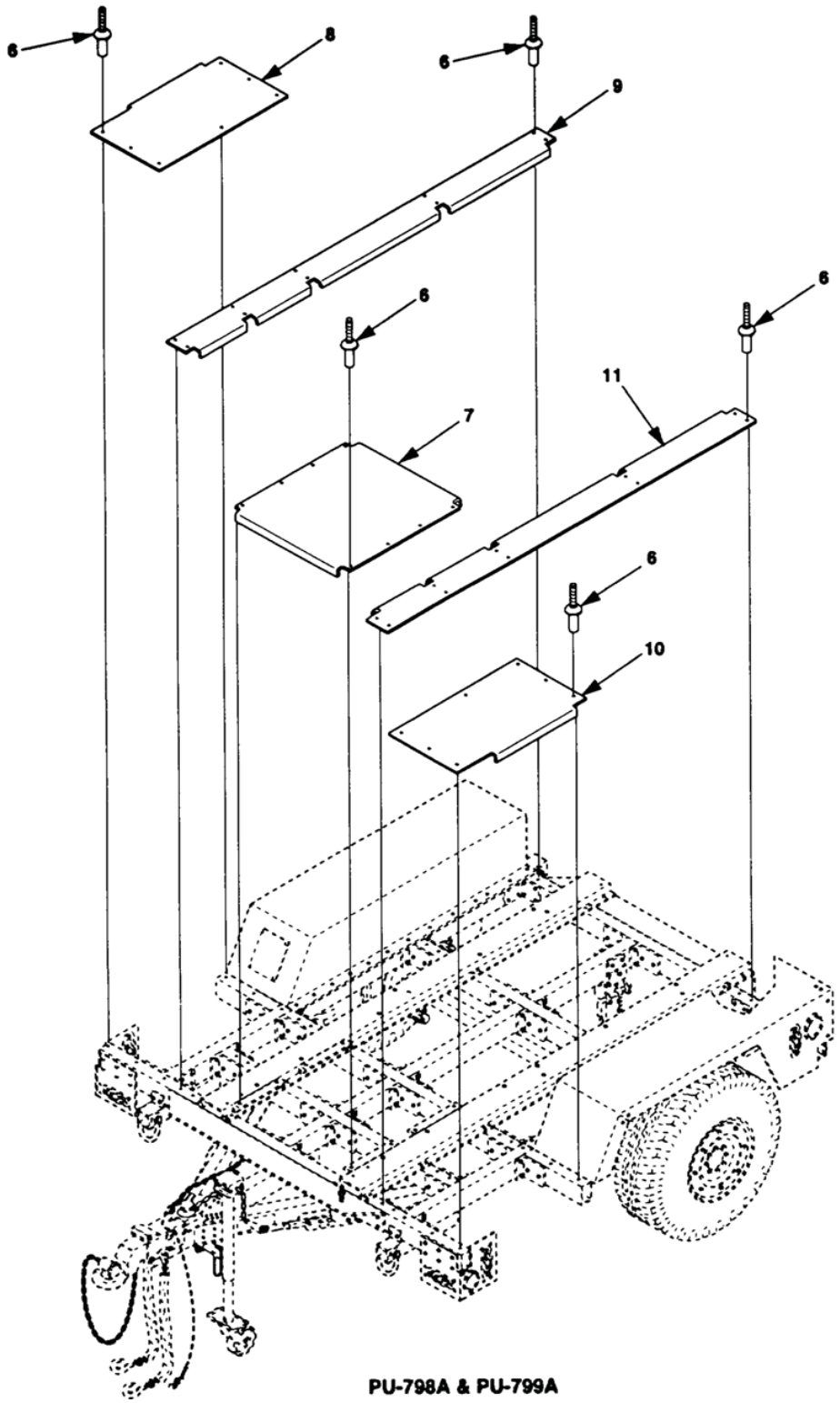

Figure 24. Platforms (Sheet 2 of 2).

(1) ITEM NO	(2) SMR CODE	(3) NSN	(4) CAGEC	(5) PART NUMBER	(6) DESCRIPTION AND USABLE ON CODE (UOC)	(7) QTY
					GROUP 04 TRAILER ASSEMBLY	
					FIG. 24 PLATFORMS	
1	PAFZZ		96906	MS51922-17	. NUT, SELF-LOCKING, HE	4
2	PAFZZ		96906	MS51412-7	. WASHER, FLAT UOC: YFK, YFL	8
2	PAFZZ		96906	MS51412-27	. WASHER, FLAT UOC: YFK, YFL	4
3	PAFZZ		80204	B1821BH038C100N	. SCREW, CAP, HEXAGON UOC: YFK, YFL	4
4	PAFZZ		97403	13230E6753-1	. PLATFORM UOC: YFK, YFL	1
5	PAFZZ		97403	13230E6753-2	. PLATFORM UOC: YFK, YFL	1
6	PAFZZ		17446	MGLP-R8-10	. RIVET, BLIND UOC: FMH, YFT	42
7	PAFZZ		30554	13230E6568	. FLOOR, CENTER UOC: FMH, YFT	1
8	PAFZZ		30554	13230E6567-1	. FLOOR, SIDE, RH UOC: FMH, YFT	1
9	PAFZZ		30554	13230E6564-1	. FLOOR, SIDE, INNER, RH UOC: FMH, YFT	1
10	PAFZZ		30554	13230E6567-2	. FLOOR, SIDE, LH UOC: FMH, YFT	1
11	PAFZZ		30554	13230E6564-2	. FLOOR, SIDE, INNER, LH UOC: FMH, YFT	1
					END OF FIGURE	

OPERATOR AND FIELD MAINTENANCE

10 kW 60 AND 400 Hz TRAILER-MOUNTED POWER UNITS AND POWER PLANTS

GROUP 04 TRAILER ASSEMBLY

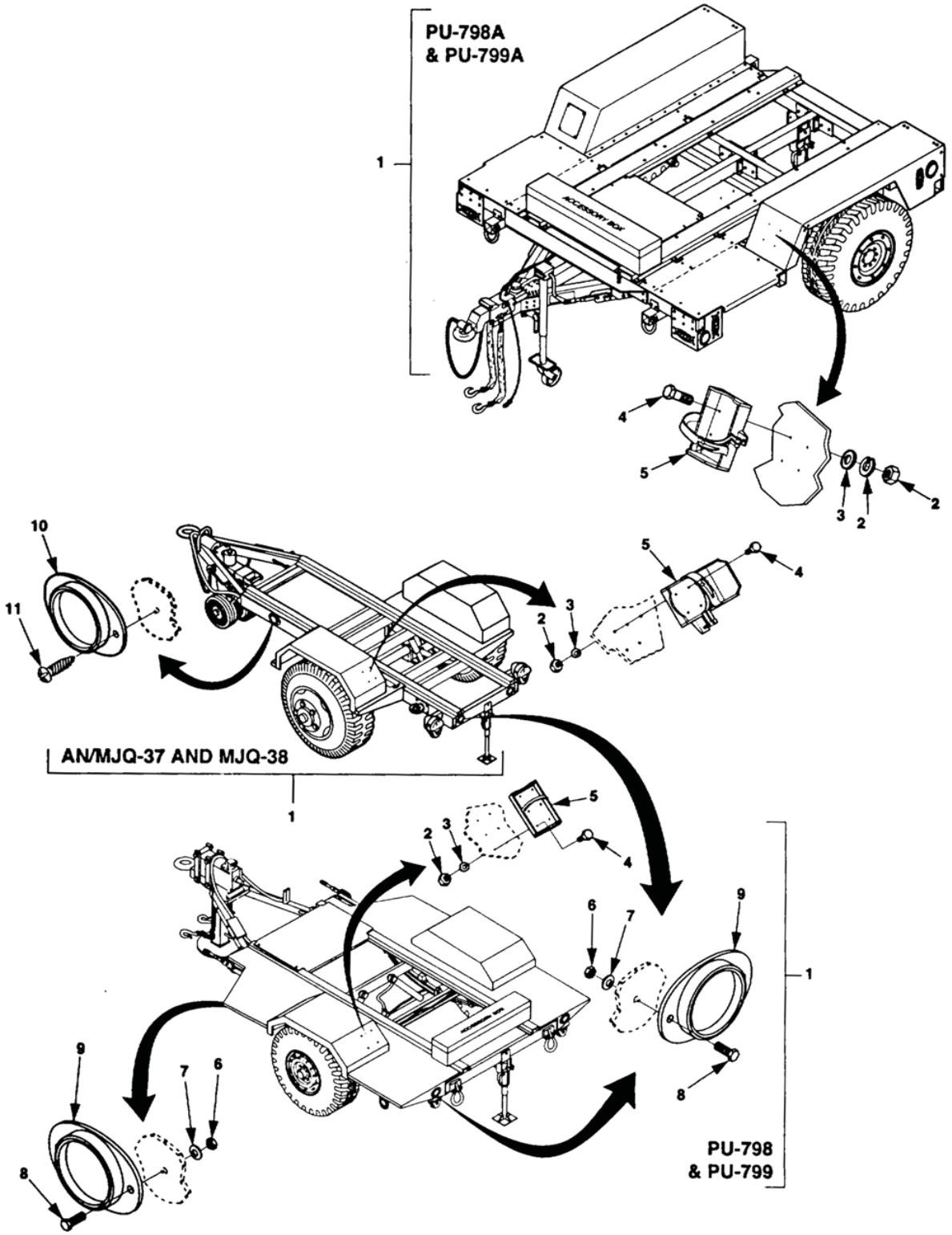

Figure 25. Power Plant/Power Unit Trailer Assembly (Sheet 1 of 2).

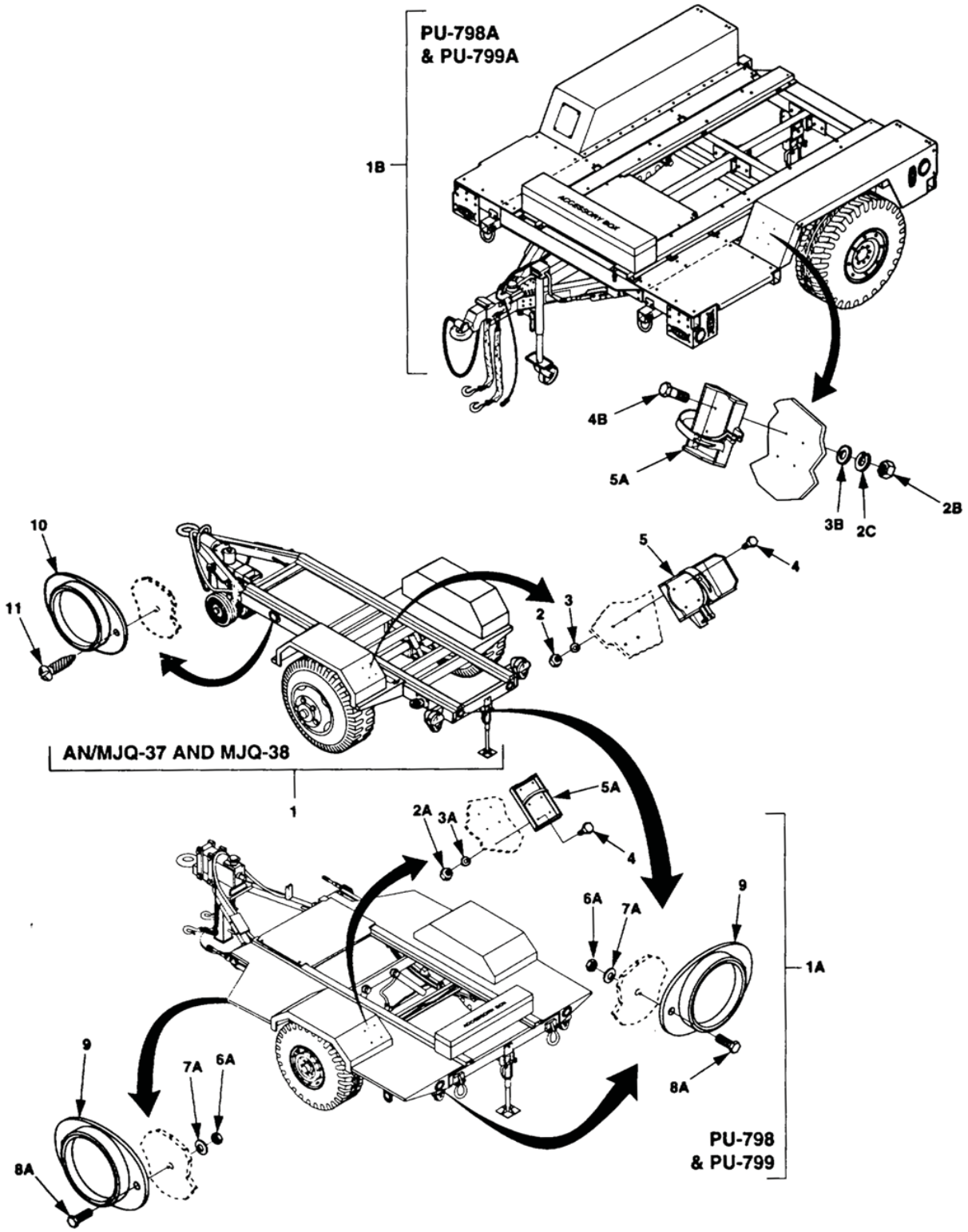

Figure 25. Power Plant/Power Unit Trailer Assembly (Sheet 2 of 2).

(1) ITEM NO	(2) SMR CODE	(3) NSN	(4) CAGEC	(5) PART NUMBER	(6) DESCRIPTION AND USABLE ON CODE (UOC)	(7) QTY
					GROUP 04 TRAILER ASSEMBLY	
					FIG. 22 POWER PLANT FIRE EXTINGUISHER, OIL DRAIN AND GROUND WIRE	
1	PBFFF		97403	13229E5825	. TRAILER, GENERATOR UOC: YHZ, YJA	1
1	PBFFF		97403	13229E5749-2	. TRAILER, GENERATOR UOC: YFK, YFL	1
1	PBFFF		30554	13230E6565	. TRAILER, ASSEMBLY UOC: FMH, YFT	1
2	PAFZZ		96906	MS51922-17	. NUT, SELF-LOCKING, HE UOC: YHZ, YJA	8
2	PAFZZ		96906	MS51922-17	. NUT, SELF-LOCKING, HE UOC: YFK, YFL	4
2	PAFZZ		96906	MS35650-3384	. NUT, PLAIN, HEXAGON UOC: FMH, YFT	4
2	PAFZZ		96906	MS35338-141	. WASHER, LOCK UOC: FMH, YFT	4
3	PAFZZ		96906	MS51412-7	. WASHER, FLAT UOC: YHZ, YJA	8
3	PAFZZ		96906	MS51412-27	. WASHER, FLAT UOC: YFK, YFL	4
3	PAFZZ		96906	MS15795-813	. WASHER, FLAT UOC: FMH, YFT	8
4	PAFZZ		80204	B1821BH038C100N	. SCREW, CAP, HEXAGON H UOC: YHZ, YJA	8
4	PAFZZ		80204	B1821BH038C075N	. SCREW, CAP, HEXAGON H UOC: YFK, YFL	4
4	PAFZZ		96906	MS35308-360	. SCREW, CAP, HEXAGON H UOC: FMH, YFT	4
5	PAFZZ		97403	13214E1235	. BRACKET, FIRE EXTING UOC: YHZ, YJA	2
5	PAFZZ		97403	13214E1235	. BRACKET, FIRE EXTING UOC: YFK, YFL, FMH, YFT	1
6	PAFZZ		96906	MS51922-1	. NUT, SELF-LOCKING, HE UOC: YHZ, YJA	8
6	PAFZZ		96906	MS51922-1	. NUT, SELF-LOCKING, HE UOC: YFK, YFL	12
7	PAFZZ		96906	MS51412-4	. WASHER, FLAT UOC: YHZ, YJA	8
7	PAFZZ		96906	MS51412-4	. WASHER, FLAT UOC: YFK, YFL	12
8	PAFZZ		80204	B1821BH025C075N	. SCREW, CAP, HEXAGON H UOC: YHZ, YJA	8
8	PAFZZ		80204	B1821BH025C088N	. SCREW, CAP, HEXAGON H UOC: YFK, YFL	12
9	PAFZZ		96906	MS35387-1	. REFLECTOR, INDICATING RED UOC: YFK, YFL	4

(1) ITEM NO	(2) SMR CODE	(3) NSN	(4) CAGEC	(5) PART NUMBER	(6) DESCRIPTION AND USABLE ON CODE (UOC)	(7) QTY
10	PAFZZ		96906	MS35387-2	. REFLECTOR, INDICATING AMBER UOC: YFK, YFL	2
11	PAFZZ		96906	MS51861-37	. SCREW, TAPPING UOC: YHZ, YJA	4

END OF FIGURE

OPERATOR AND FIELD MAINTENANCE

10 kW 60 AND 400 Hz TRAILER-MOUNTED POWER UNITS AND POWER PLANTS

GROUP 04 TRAILER ASSEMBLY

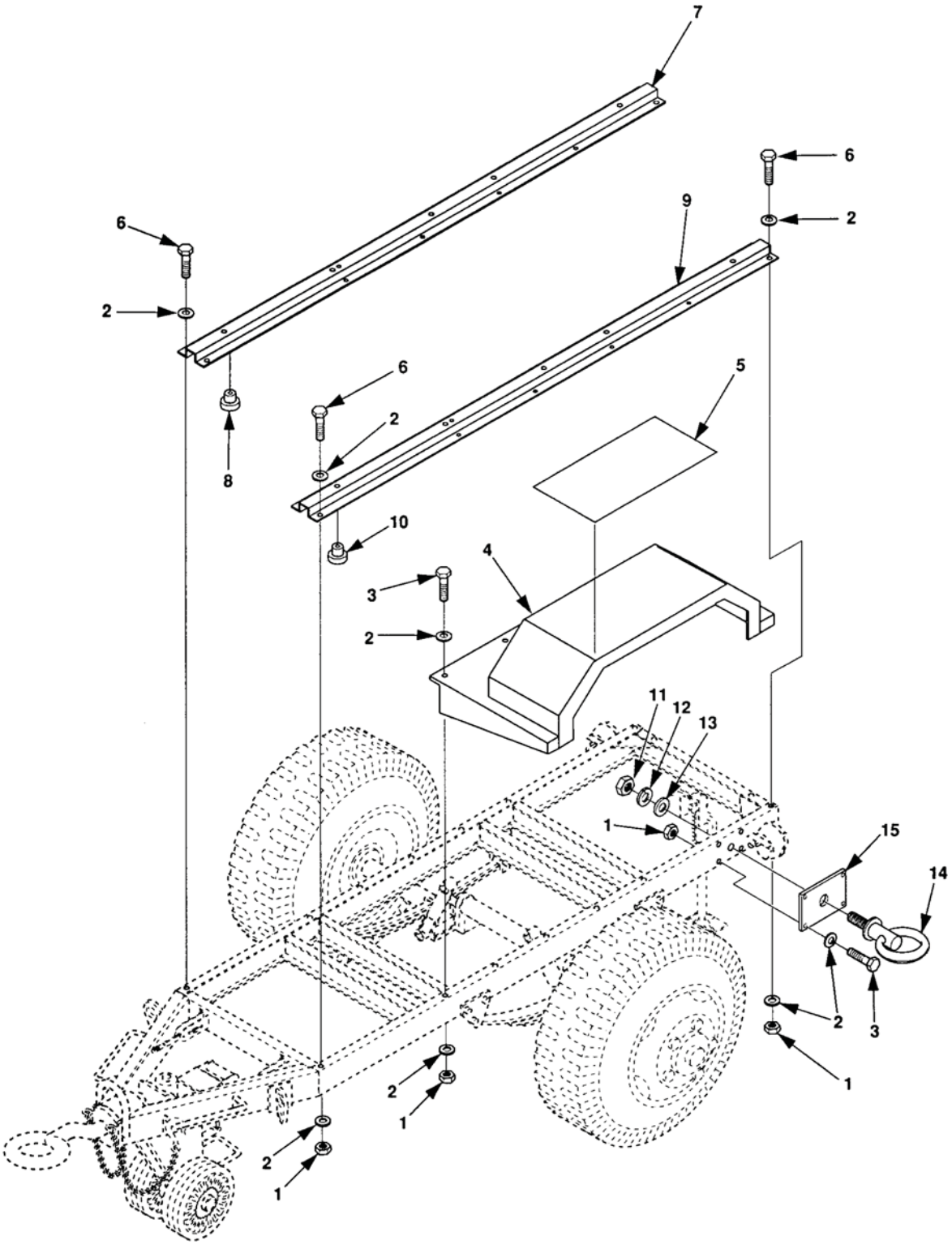

Figure 26. 1½ Ton Trailer, AN/MJQ-37, AN/MJQ-38 Fender.

(1) ITEM NO	(2) SMR CODE	(3) NSN	(4) CAGEC	(5) PART NUMBER	(6) DESCRIPTION AND USABLE ON CODE (UOC)	(7) QTY
					GROUP 04 TRAILER ASSEMBLY	
					FIG. 26 1½ TON TRAILER, AN/MJQ-37, AN/MJQ-38 FENDER	
1	PAFZZ		96906	MS51922-17	. NUT, SELF-LOCKING, HE UOC: YHZ, YJA	42
2	PAFZZ		96906	MS51412-7	. WASHER, FLAT UOC: YHZ, YJA	76
3	PAFZZ		80204	B1821BH038C125N	. SCREW, CAP, HEXAGON H UOC: YHZ, YJA	38
4	XDFFF		97403	13229E5817	. FENDER UOC: YHZ, YJA	2
5	MOFZZ		19099	13229E5817-6	. DECK COVERING MAKE FROM P/N 22806-000-00 (88900), AS REQUIRED UOC: YHZ, YJA	1
6	PAFZZ		80204	B1821BH038C600N	. SCREW, CAP, HEXAGON H UOC: YHZ, YJA	4
7	XDFFF		97403	13229E5677	. RAIL, MOUNTING CURBSIDE UOC: YHZ, YJA	1
8	PAFZZ		96906	MS27130-CR68	. NUT, BLIND, RIVET UOC: YHZ, YJA	1
9	XDFFF		97403	13212E5748	. RAIL, MOUNTING ROADSIDE UOC: YHZ, YJA	1
10	PAFZZ		96906	MS27130-CR68	. NUT, BLIND, RIVET UOC: YHZ, YJA	1
11	PAFZZ		96906	MS51968-23	. NUT, PLAIN, HEXAGON UOC: YHZ, YJA	2
12	PAFZZ		96906	MS51415-11	. WASHER, LOCK UOC: YHZ, YJA	2
13	PAFZZ		96906	MS51412-13	. WASHER, FLAT UOC: YHZ, YJA	2
14	PAFZZ		97403	13229E9629-4	. RING, LIFTING UOC: YHZ, YJA	2
15	XDFZZ		97403	13229E5818	. BRKT, TIEDOWN UOC: YHZ, YJA	2
					END OF FIGURE	

OPERATOR AND FIELD MAINTENANCE

10 kW 60 AND 400 Hz TRAILER-MOUNTED POWER UNITS AND POWER PLANTS

GROUP 04 TRAILER ASSEMBLY

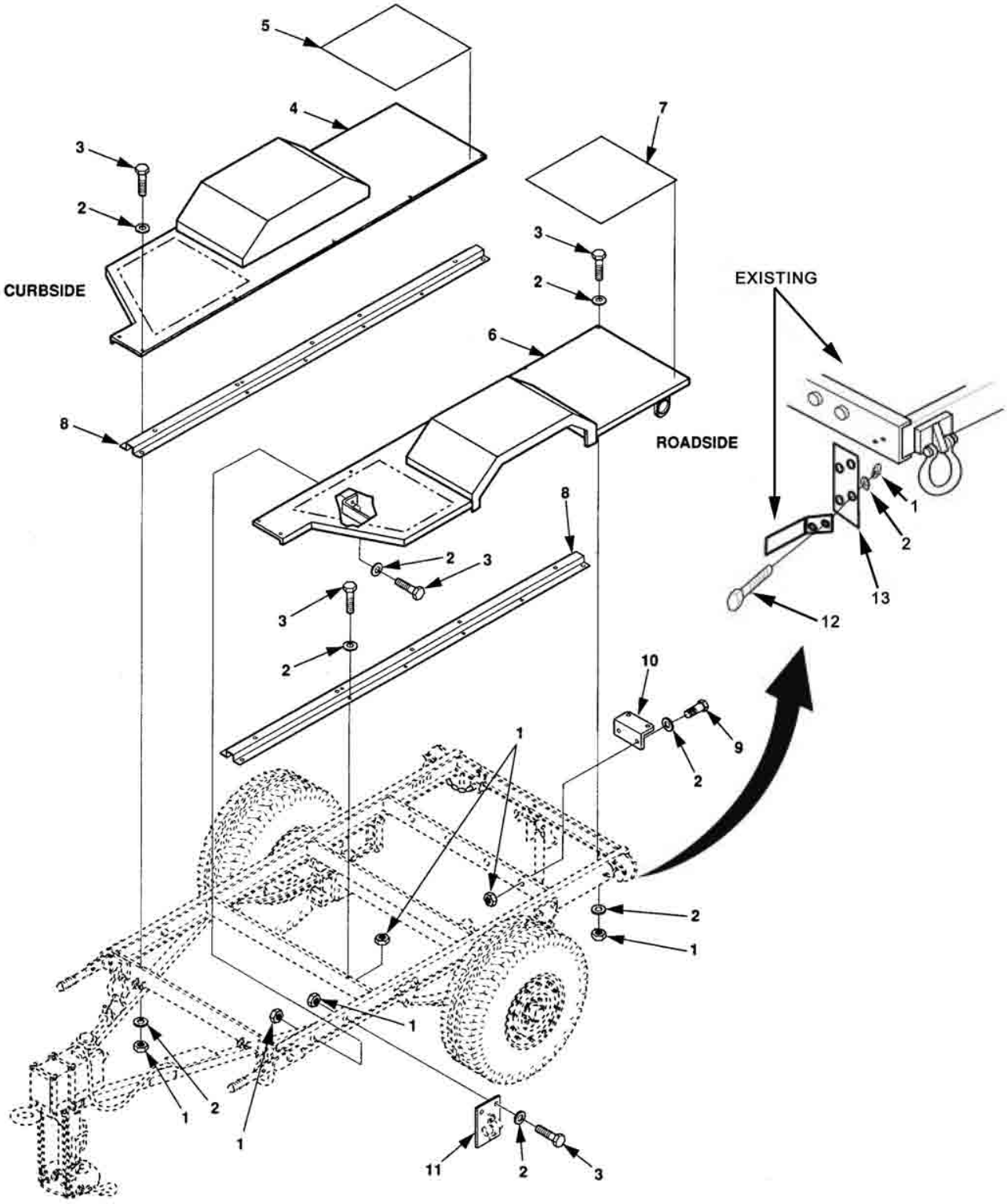

Figure 27. One Ton Trailer, Fenders, PU-798, PU-799.

(1) ITEM NO	(2) SMR CODE	(3) NSN	(4) CAGEC	(5) PART NUMBER	(6) DESCRIPTION AND USABLE ON CODE (UOC)	(7) QTY
					GROUP 04 TRAILER ASSEMBLY	
					FIG. 27 ONE TON TRAILER, FENDERS, PU-798, PU-799	
1	PAFZZ		96906	MS51922-17	. NUT, SELF-LOCKING, HE UOC: YFK, YFL	60
2	PAFZZ		96906	MS27183-27	. WASHER, FLAT UOC: YFK, YFL	104
3	PAFZZ		80204	B1821BH038C150N	. SCREW, CAP, HEXAGON H UOC: YFK, YFL	56
4	XDFFF		97403	13229E9619-1	. FENDER CURBSIDE UOC: YFK, YFL	1
5	MOFZZ		19099	13229E9619-1-7	. DECK COVERING MAKE FROM P/N 22806-000-00 (88900), AS REQUIRED UOC: YFK, YFL	1
6	XDFFF		97403	13229E9620-1	. FENDER ROADSIDE UOC: YFK, YFL	1
7	MOFZZ		19099	13229E9620-1-7	. DECK COVERING MAKE FROM P/N 22806-000-00 (88900), AS REQUIRED UOC: YFK, YFL	1
8	XDFZZ		97403	13229E5743-2	. RAIL, MOUNTING UOC: YFK, YFL	2
9	PAFZZ		80204	B1821BH038C225N	. SCREW, CAP, HEXAGON H UOC: YFK, YFL	4
10	XDFZZ		97403	13229E5758	. BRACKET, RAIL MOUNTING UOC: YFK, YFL	2
11	XDFZZ		97403	13229E2308	. PLATE, RELOCATING UOC: YFK, YFL	2
12	PAFZZ		80204	B1821BH038C150N	. SCREW, CAP, HEXAGON H UOC: YFK, YFL	2
13	XDFZZ		97403	13238E9905	. PLATE, RELOCATING UOC: YFK, YFL	2

END OF FIGURE

OPERATOR AND FIELD MAINTENANCE

10 kW 60 AND 400 Hz TRAILER-MOUNTED POWER UNITS AND POWER PLANTS

GROUP 04 TRAILER ASSEMBLY

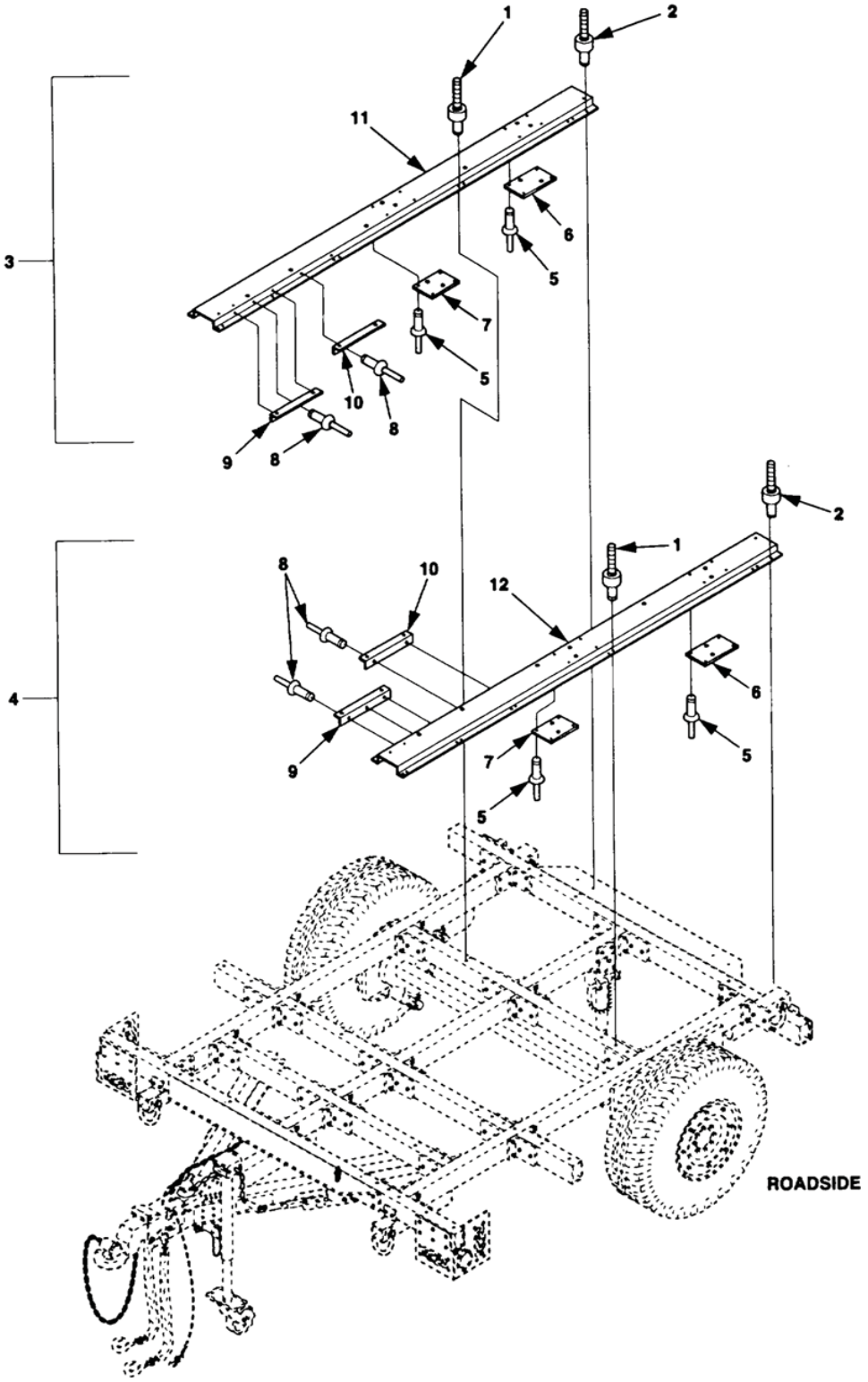

Figure 28. Light Tactical Trailer, Mounting Rails and Fenders, (PU-798A and PU 799A) (Sheet 1 of 2).

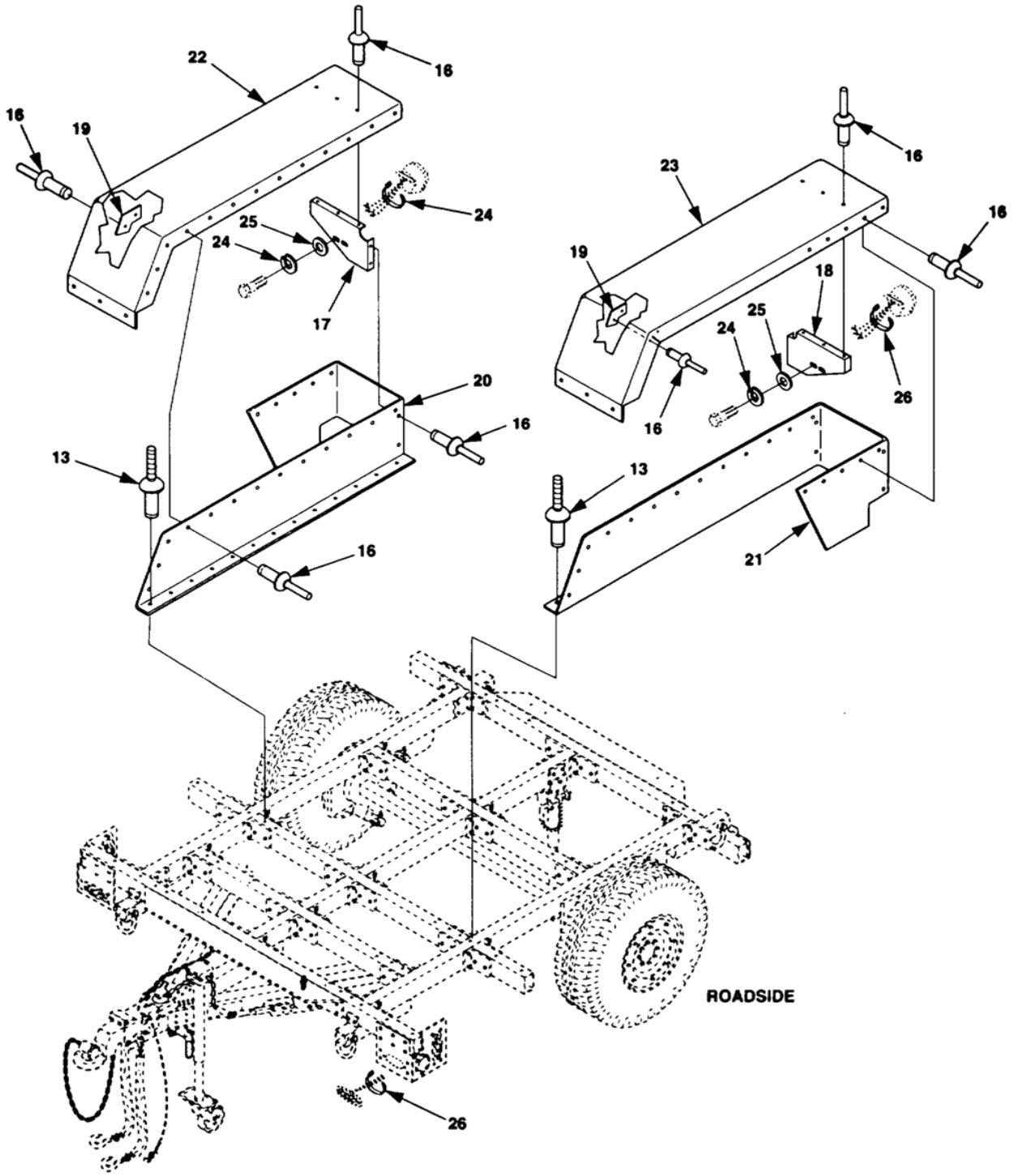

Figure 28. Light Tactical Trailer, Mounting Rails and Fenders, (PU-798A and PU 799A) (Sheet 2 of 2).

(1) ITEM NO	(2) SMR CODE	(3) NSN	(4) CAGEC	(5) PART NUMBER	(6) DESCRIPTION AND USABLE ON CODE (UOC)	(7) QTY
					GROUP 04 TRAILER ASSEMBLY	
					FIG. 28 LIGHT TACTICAL TRAILER, MOUNTING RAILS AND FENDERS, (PU-798A AND PU 799A)	
1	PAFZZ		9K475	BOM-R8-8	. RIVET, BLIND UOC: FMH, YFT	40
2	PAFZZ		9K475	BOM-R8-10	. RIVET, BLIND UOC: FMH, YFT	4
3	XDFFF		30554	13230E6569-1	. RAIL ASSY, MTG, RH UOC: FMH, YFT	1
4	XDFFF		30554	13230E6569-2	. RAIL ASSY, MTG, LH UOC: FMH, YFT	1
5	PAFZZ		17446	MGL 100-R6-9	. RIVET, BLIND UOC: FMH, YFT	16
6	XDFZZ		30554	13230E6527	. PLATE, DOUBLER, MTG R UOC: FMH, YFT	2
7	XDFZZ		30554	13230E6576	. PLATE, DOUBLER, MTG R UOC: FMH, YFT	2
8	PAFZZ		17446	MGLP-R8-10	. RIVET, BLIND UOC: FMH, YFT	10
9	XDFZZ		30554	13230E6577	. ANGLE, SUPPORT, MTG R UOC: FMH, YFT	2
10	XDFZZ		30554	13230E6526	. ANGLE, SUPPORT, MTG R UOC: FMH, YFT	2
11	XDFZZ		30554	13230E6578-1	. RAIL, MOUNTING GEN, R-H UOC: FMH, YFT	1
12	XDFZZ		30554	13230E6578-2	. RAIL, MOUNTING GEN, L-H UOC: FMH, YFT	1
13	PAFZZ		17446	MGLP-R8-6	. RIVET, STEEL SHANK UOC: FMH, YFT	38
14	XDFFF		30554	13230E6571-1	. FENDER, ASSEMBLY, RH (NOT SHOWN) UOC: FMH, YFT	1
15	XDFFF		30554	13230E6571-2	. FENDER, ASSEMBLY, LH (NOT SHOWN) UOC: FMH, YFT	1
16	PAFZZ		17446	MGLP-R8-6	. . RIVET, STEEL SHANK UOC: FMH, YFT	58
17	XDFZZ		30554	13230E6582-1	. . BRACKET, INSIDE FEND UOC: FMH, YFT	1
18	XDFZZ		30554	13230E6582-2	. . BRACKET, INSIDE FENDER UOC: FMH, YFT	1
19	XDFZZ		30554	13230E6579	. . ANGLE, SUPPORT, FENDER UOC: FMH, YFT	2
20	XDFZZ		30554	13230E6583-1	. . FENDER, SIDE, TRAILER UOC: FMH, YFT	1
21	XDFZZ		30554	13230E6583-2	. . FENDER, SIDE, TRAILER UOC: FMH, YFT	1

(1) ITEM NO	(2) SMR CODE	(3) NSN	(4) CAGEC	(5) PART NUMBER	(6) DESCRIPTION AND USABLE ON CODE (UOC)	(7) QTY
22	XDFZZ		30554	13230E6580-1	. . FENDER, TOP, TRAILER UOC: FMH, YFT	1
23	XDFZZ		30554	13230E6580-2	. . FENDER, TOP, TRAILER UOC: FMH, YFT	1
24	PAFZZ		96906	MS35338-141	. WASHER, LOCK UOC: FMH, YFT	4
25	PAFZZ		96906	MS15795-813	. WASHER, FLAT UOC: FMH, YFT	4
26	PAFZZ		96906	MS3367-1-0	. STRAP, TIEDOWN, ELECT UOC: FMH, YFT	4
27	XDFZZ		97403	1323OE6383-6-4	. RIVET, BLIND UOC: FMH, YFT	6
28	XDFZZ		97403	13229E5666-3	. PLATE, IDENT/TRANSP UOC: FMH, YFT	6

END OF FIGURE

OPERATOR AND FIELD MAINTENANCE

10 kW 60 AND 400 Hz TRAILER-MOUNTED POWER UNITS AND POWER PLANTS

GROUP 04 TRAILER ASSEMBLY

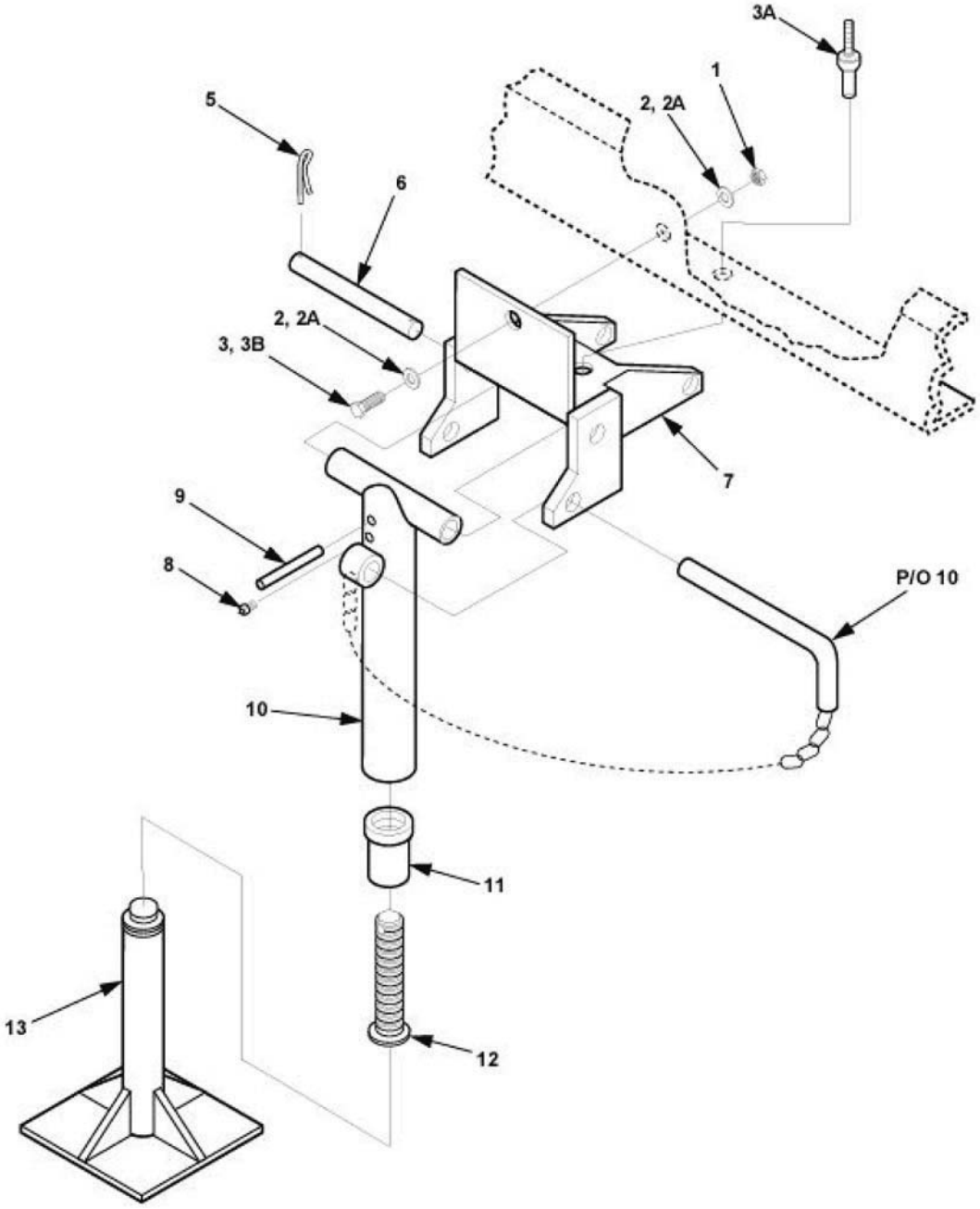

Figure 29. Jack Leveling-Support Assembly.

(1) ITEM NO	(2) SMR CODE	(3) NSN	(4) CAGEC	(5) PART NUMBER	(6) DESCRIPTION AND USABLE ON CODE (UOC)	(7) QTY
					GROUP 04 TRAILER ASSEMBLY	
					FIG. 29 JACK LEVELING-SUPPORT ASSEMBLY	
1	PAFZZ		96906	MS51922-17	. NUT, SELF-LOCKING, HE UOC: YFK, YFL, YFT, YHZ, YJA, FMH	3
2	PAFZZ		96906	MS51412-7	. WASHER, FLAT UOC: YFK, YFL, YFT, YHZ, YJA, FMH	6
2	PAFZZ		96906	MS51412-27	. WASHER, FLAT UOC: YFK, YFL, YFT, YHZ, YJA, FMH	3
3	PAFZZ		80208	B1821GH038C150N	. SCREW, CAP, HEXAGON H UOC: YHZ, YJA	3
3	PAFZZ		80204	B1821BH038	. SCREW, CAP, HEXAGON H UOC: YFK, YFL	3
3	PAFZZ		17446	BOM-R12-8	. RIVET BLIND UOC: FMH, YFT	3
4	PAFZZ		97403	13214E1206-1	. JACK, LEVELING-SUPPORT (NOT SHOWN) UOC: YHZ, YJA, YFK, YFL	1
4	PAFZZ		30554	13214E1206-2	. JACK, LEVELING-SUPPORT UOC: FMH, YFT	1
5	PAFZZ		96906	MS24665-353	. . PIN, COTTER UOC: YFK, YFL, YFT	2
6	PBFZZ		97403	13214E1209	. . PIN, STRAIGHT, HEADLESS UOC: YFK, YFL, YFT	1
7	XAFZZ		97403	13214E1207	. . BRACKET UOC: YFK, YFL, YFT	1
8	PAFZZ		96906	MS15006-1	. . FITTING, LUBRICATION UOC: YFK, YFL, YFT	1
9	PAFZZ		96906	MS16562-66	. . PIN, SPRING UOC: YFK, YFL, YFT	1
10	XAFZZ		97403	13214E1208-1	. . CHAIN, PIN RETAINING UOC: YFK, YFL, YFT	1
11	XAFZZ		97403	13214E1211	. . NUT, SLEEVE UOC: YFH, YFL, YFT, YHZ, YJA, FMH	1
12	XAFZZ		97403	13214E1210	. . SCREW UOC: YFH, YFL, YFT, YHZ, YJA, FMH	1
13	PBFZZ		97403	13214E1212-1	. . SUPPORT BASE, LEG UOC: YFK, YFL, YFT	1
					END OF FIGURE	

OPERATOR AND FIELD MAINTENANCE

10 kW 60 AND 400 Hz TRAILER-MOUNTED POWER UNITS AND POWER PLANTS

GROUP 04 TRAILER ASSEMBLY

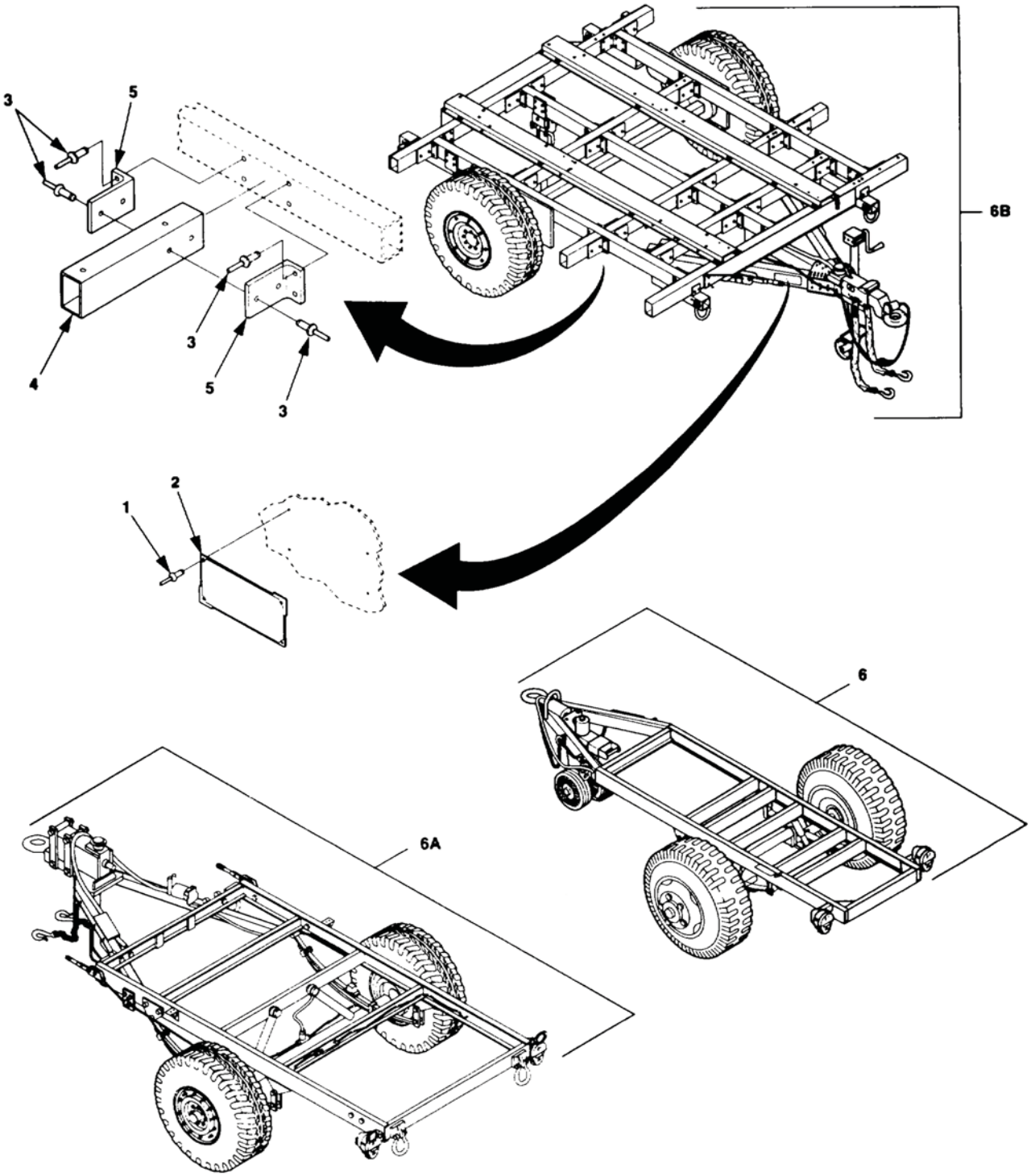

Figure 30. Power Plant/Power Unit Trailer Chassis Assembly.

(1) ITEM NO	(2) SMR CODE	(3) NSN	(4) CAGEC	(5) PART NUMBER	(6) DESCRIPTION AND USABLE ON CODE (UOC)	(7) QTY
					GROUP 04 TRAILER ASSEMBLY	
					FIG. 30 POWER PLANT/POWER UNIT TRAILER CHASSIS ASSEMBLY	
1	PAFZZ	07707		AD45ABS	. RIVET, BLIND UOC: FMH, YFT	4
2	MDFZZ	30554		13230E6572	. PLATE, IDENTIFICATION CHASSIS VARIANT UOC: FMH, YFT	1
3	PAFZZ	17446		BOM-R8-8	. RIVET, BLIND UOC: FMH, YFT	16
4	XDFZZ	30554		13230E6514	. STRUCTURAL SECTION UOC: FMH, YFT	2
5	XDFZZ	30554		13230E6524	. CLIP, FRAME, CORNER UOC: FMH, YFT	4
6	XAFFF	97403		13229E5824	. CHASSIS ASSEMBLY UOC: YHZ, YJA	1
7	XAFFF	97403		13229E5746	. CHASSIS ASSEMBLY UOC: YFK, YFL	1
8	XAFFF	19207		12450001	. CHASSIS, TRAILER-LTT UOC: FMH, YFT	1

END OF FIGURE

OPERATOR AND FIELD MAINTENANCE

10 kW 60 AND 400 Hz TRAILER-MOUNTED POWER UNITS AND POWER PLANTS

BULK ITEMS

(1) ITEM NO	(2) SMR CODE	(3) NSN	(4) CAGEC	(5) PART NUMBER	(6) DESCRIPTION AND USABLE ON CODE (UOC)	(7) QTY
					GROUP 05 BULK MATERIALS	
					FIG. 31 BULK	
1	PAFZZ		80348	QQB575F30T0437	BRAID, WIRE UOC: YHZ, YJA	V
2	PAFZZ		81349	CO-04HDE(4/4-4/12B) 1290	CABLE, POWER UOC: YHZ, YJA	V
3	PAFZZ		88900	2286-000-00	DECK COVERING, LIGHT UOC: YHZ, YJA	V
4	PAFZZ		96906	MS35822-9A	HINGE, BUTT UOC: YHZ, YJA	V
5	PAFZZ		96906	MS35823-6A	HINGE, BUTT UOC: YHZ, YJA	V
6	PAFZZ		81349	M6000E00200	HOSE, NONMETALLIC UOC: YHZ, YJA	V
7	PAFZZ		81349	M23053/5-111-0	INSULATION SLEEVING UOC: YHZ, YJA	V
8	PAFZZ		81349	M23053/5-107-9	INSULATION SLEEVING UOC: YHZ, YJA	V
9	PAFZZ		81349	M23053/5-104-0	INSULATION SLEEVING UOC: YHZ, YJA	V
10	PAFZZ		81349	M23053/5-108-0	INSULATION SLEEVING UOC: YHZ, YJA	V
11	PAFZZ		81349	M23053/5-105-9	INSULATION SLEEVING UOC: YHZ, YJA	V
12	PAFZZ		81349	M23053/5-105-0	INSULATION SLEEVING UOC: YHZ, YJA	V
13	PAFZZ		81349	M24768/2-S-7	INSULATION SHEET, EL UOC: YHZ, YJA	V
14	PAFZZ		81349	M23053/5-108-4	INSULATION SLEEVING UOC: YHZ, YJA	V
15	PAFZZ		81346	2B2B2C1F2	STRIP, RUBBER UOC: YHZ, YJA	V
16	PAFZZ		81349	M22759/16-20-9	WIRE, ELECTRICAL UOC: YHZ, YJA	V
17	PAFZZ		81349	M5086/2-4-9	WIRE, ELECTRICAL UOC: YHZ, YJA	V
18	PAFZZ		81349	M5086/2-6-9	WIRE, ELECTRICAL UOC: YHZ, YJA	V
19	PAFZZ		81349	M22759/16-16-9	WIRE, ELECTRICAL UOC: YHZ, YJA	V
20	PAFZZ		81348	QQW343C06B1B	WIRE, ELECTRICAL UOC: YHZ, YJA	V

END OF FIGURE

OPERATOR AND FIELD MAINTENANCE

10 kW 60 AND 400 Hz TRAILER-MOUNTED POWER UNITS AND POWER PLANTS

SPECIAL TOOLS LIST

NOT APPLICABLE

END OF WORK PACKAGE

OPERATOR AND FIELD MAINTENANCE

10 kW 60 AND 400 Hz TRAILER-MOUNTED POWER UNITS AND POWER PLANTS

NSN INDEX

STOCK NUMBER	FIG.	ITEM
5999-00-014-0952	14	9
5940-00-021-3321	22	18
5306-00-021-3912	20	3
5306-00-021-4065	20	3
5310-00-022-8847	21	11
	22	11
5310-00-042-4229	12	2
5310-00044-6477	20	2
5320-00-052-1972	22	14A
5305-00-054-5650	17	3
5305-00-054-5652	6	8
5305-00-054-6651	6	12
5305-00-054-6655	18	2
5305-00-054-6671	6	1
	7	1
	11	7
	19	11
5305-00-059-3660	19	8
5305-00-059-3663	15	4
	16	4
5340-00-066-1235	19	1
5305-00-068-0508	24	8
5305-00-068-0510	23	3
	24	4
5305-00-068-0511	25	3
	28	3
5305-00-071-2068	2	3
5305-00-071-2070	1	3
5305-00-071-2505	24	8A
5975-00-074-2072	14	15
5970-00-082-3942	BULK	11
5310-00-087-4652	29	1

STOCK NUMBER	FIG.	ITEM
	5	1
	23	1
	24	2
	26	2A
	25	1
	26	1
	28	1
5310-00-088-1251	24	6A
5940-00-113-8190	19	22
	21	9
	22	9
5940-00-114-1310	18	9
5935-00-114-8061	14	6
5940-00-115-2676	4	4
	4	12
	15	12
5940-00-115-4996	14	21
	14	25
	15	11
	4	3
	4	11
	13	12
	14	17
	14	13
5310-00-138-4315	12	6
5940-00-143-4780	16	5
5940-00-143-4793	16	2
4730-00-172-0049	29	8
5310-00-184-8971	22	6
	23	6
4710-00-185-6948	20	3
5999-00-186-3912	9	19

STOCK NUMBER	FIG.	ITEM
5310-00-187-2413	22	7
9905-00-2002-3639	25	10
4210-00-202-7858	23	1
9905-00-205-2795	25	9
5310-00-209-1239	20	9
4210-00-223-4857	25	5A
5310-00-225-5328	6	3
	7	2
	11	6
	19	12
5310-00-225-6993	1	1
	2	1
5306-00-226-4827	21	3
5307-00-227-1741	22	12
	23	12
5340-00-234-8422	21	8
5310-00-245-3612	25	2B
5310-00-252-8748	21	1
4210-00-270-4512	22	1
5940-00-271-9504	20	20
4730-00-277-5115	20	6
5940-00-283-5280	16	3
5330-00-402-5125	20	5
5305-00-432-4172	25	11
5945-00-435-1833	6	10
5320-00-483-0558	28	1
5305-00-543-4372	25	4A
5940-00-557-4338	4	2
	4	10
	14	3
	14	8
6145-00-578-6594	BULK	18
6145-00-578-6595	BULK	17
5320-00-582-3305	11	1
5320-00-582-5677	23	18
5310-00-584-7995	22	8
	23	8

STOCK NUMBER	FIG.	ITEM
4710-00-597-8731	19	2
5310-00-614-3506	2	2
5310-00-625-5756	20	2
5305-00-638-8920	26	9
5940-00-660-3633	15	4
5305-00-680-4262	24	4B
5310-00-680-6823	23	17
5305-00-725-2317	5	3
	27	3
5975-00-727-5153	6	24
	15	6
5305-00-727-6804	2	3A
5970-00-740-2971	BULK	8
6210-00-753-2289	8	1
5320-00-753-3830	20	5
5310-00-763-8901	25	11
5310-00-768-0321	2	1
5310-00-802-4701	24	3B
	27	25
5310-00-809-8541	26	2
5970-00-812-1356	BULK	7
5970-00-812-2967	BULK	10
5970-00-812-2969	BULK	9
5940-00-813-0698	6	20
	9	2
5315-00-838-4584	27	9
5315-00-839-5822	27	5
5305-00-841-2681	19	7
5975-00-878-3791	19	15
5310-00-883-9417	22	17
6210-00-900-9423	8	6
	9	5
5320-00-904-4136	21	14
	22	14
4730-00-908-3194	21	2
	22	2
5975-00-924-9927	19	18

STOCK NUMBER	FIG.	ITEM
5310-00-929-6395	6	13
5310-00-933-8118	6	6
	18	2
5310-00-933-8119	6	2
	7	3
	11	5
	19	13
5310-00-933-8120	15	2
	17	2
	19	6
5310-00-934-9748	6	5
	17	1
5310-00-934-9751	3	1
5310-00-934-9759	11	4
5310-00-934-9761	19	1
5310-00-934-9765	15	1
	17	1
	19	5
5970-00-954-1622	BULK	12
5310-00-974-6623	21	1A
5340-00-975-2126	11	2
	21	6
5940-00-983-6046	19	3
5310-00-984-3806	21	1
5975-00-984-6582	28	26
5310-00-984-7042	25	2C
	28	24
5310-00-989-0908	23	16
5310-00-989-5945	12	1
5305-00-993-1851	3	2
5310-01-012-7400	12	4
5120-01-013-1676	20	13
5120-01-019-9564	20	23
6145-01-042-4621	BULK	16
5935-01-042-7579	6	11
6145-01-044-8799	BULK	19
5340-01-053-7127	BULK	5

STOCK NUMBER	FIG.	ITEM
5340-01-054-4934	BULK	4
5310-01-078-5996	22	5
	23	5
5999-01-091-3187	15	8
5320-01-140-1479	28	2
5310-01-141-6672	6	7
	18	4
5315-01-162-0143	29	6
2590-01-167-8596	29	13
5310-01-180-7157	2	1B
5310-01-216-7390	1	4
6210-01-230-1851	8	9
5210-01-230-1851	9	8
5340-01-242-4554	3	4
5310-01-257-7590	5	2
	24	2
	25	3
	26	2
	29	2
5310-01-266-4641	1	2
	2	2
6115-01-274-7392	1	5
	2	4
6115-01-275-5061	1	5
	2	4
5310-01-303-4701	6	14
6240-01-355-4422	8	3

END OF WORK PACKAGE

OPERATOR AND FIELD MAINTENANCE

10 kW 60 AND 400 Hz TRAILER-MOUNTED POWER UNITS AND POWER PLANTS

P/N INDEX

PART NUMBER	FIG.	ITEM
10-33675-36	15	10
11500	7	4
12450001	30	6B
13200E6361	20	11
13200E6363	20	8
13205E4918	22	13
	23	13
13211E7541	20	1
13211E7542	20	2
13211E7543	20	3
13211E7544	20	4
13211E7546	20	5
13211E7547	20	10
13211E7548	20	12
13212E5748	26	9
13214E1206-1	29	4
13214E1206-2	29	4
13214E1207	29	4
13214E1208-1	29	10
13214E1209	29	6
13214E1210	29	12
13214E1211	29	11
13214E1212-1	29	13
13214E1223	22	12
	23	12
13214E1235	25	5A
13214E1391	8	6
	9	5
13218E5149-8	3	5
13222E9686	6	11
13226E7741	20	13
13229E2308	27	11
13229E5649-1	11	8

PART NUMBER	FIG.	ITEM
13229E5649-1-12	11	12
13229E5649-1-13	11	13
13229E5649-1-6	11	11
13229E5654-1	11	14
13229E5654-2	11	15
13229E5666-14	23	15
13229E5666-15	23	15
13229E5666-3	22	15
13229E5666-4	22	15
13229E5670-24	22	10
13229E5671-41	22	3
13229E5677	26	7
13229E5715-22	23	3
13229E5743-2	27	8
13229E5746	30	6
13229E5749-2	25	1
13229E5758	27	10
13229E5764-2	9	1
13229E5764-2-2	9	3
13229E5764-2-3	9	4
13229E5817	26	4
13229E5817-6	26	5
13229E5818	26	15
13229E5819-1	11	3
13229E5819-2	11	3
13229E5820-1	5	4
13229E5820-2	5	4
13229E5820-43	8	5
13229E5820-44	8	4
13229E5820-48	19	10
13229E5820-51	18	6
13229E5821	19	15

PART NUMBER	FIG.	ITEM
13229E5821-4	19	16
13229E5828-34	14	14
13229E5828-4	12	16
13229E5828-4-2	14	19
13229E5828-4-4	14	18
13229E5828-5	14	20
13229E5828-5-2	14	23
13229E5828-5-4	14	22
13229E5828-5-6	14	24
13229E5828-5-6-2	14	27
13229E5828-5-6-4	14	26
13229E5829	6	19
13229E5829-1	6	23
13229E5829-3	6	21
13229E5829-6	6	22
13229E5830	6	4
13229E5830-9	6	25
13229E5831	16	1
13229E5831-1	16	7
13229E5831-7	16	8
13229E5831-9	16	9
13229E5832-1	15	5
13229E5832-1-2	15	16
13229E5832-1-3	15	17
13229E5832-1-6	15	13
13229E5832-1-8	15	14
13229E5832-2	15	5
13229E5833	12	7
13229E5836-3	4	1
13229E5836-3-1	4	8
13229E5836-3-5	4	5
13229E5836-3-6	4	6
13229E5836-3-7	4	7
13229E5836-4	4	9
13229E5836-4-1	4	16
13229E5836-4-5	4	13
13229E5836-4-6	4	14

PART NUMBER	FIG.	ITEM
13229E5836-4-7	4	15
13229E7946	21	4
13229E9619-1	27	4
13229E9619-1-7	27	5
13229E9620-1	27	6
13229E9620-1-7	27	7
13229E9621-1	24	4
13229E9621-2	24	5
13229E9629-4	26	14
13229E9630	11	16
13229E9631	14	8
13229E9635	1	6
1322E5822	19	14
1322E5823	6	28
1322E5824	30	6
1322E5825	25	1
1322E5827	3	6
1322E5828-1	14	1
1322E5828-1-2	14	5
1322E5828-1-4	14	4
1322E5828-2	14	6
1322E5828-2-2	14	10
1322E5828-2-4	14	9
1322E5828-3	14	11
1322E5828-3-2	14	15
13230E6514	30	4
13230E6524	30	5
13230E6526	28	10
13230E6527	28	6
13230E6530-26	23	3
13230E6531	23	15B
13230E6541	23	15C
13230E6564-1	24	9
13230E6564-2	24	11
13230E6565	25	1B
13230E6567-1	24	8
13230E6567-2	24	10

PART NUMBER	FIG.	ITEM
13230E6568	24	7
13230E6569-1	28	3
13230E6569-2	28	4
13230E6571-1	28	14
13230E6571-2	28	15
13230E6572	30	7
13230E6576	28	7
13230E6577	28	9
13230E6578-1	28	11
13230E6578-2	28	12
13230E6579	28	19
13230E6580-1	28	22
13230E6580-2	28	23
13230E6582-1	28	17
13230E6582-2	28	18
13230E6583-1	28	20
13230E6583-2	28	21
181-0931-001	8	7
	9	6
181-8836-09-553	8	9
	9	8
22806-000-00	BULK	3
2B2B2C1F2	BULK	15
3304695-1	22	1
	23	1
37TB18B	6	26
37TB5	19	3
4328	20	7
565C10GAP10	6	16
70-801074	20	19
72-2029-1	20	23
A-A-1106	21	1
AD45ABS	21	14A
	30	1
AN16-5-4	20	6
AN960-C4	6	7
	19	4

PART NUMBER	FIG.	ITEM
AN961-616T	22	7
	23	7
B1821BH025C075N	25	8
B1821BH025C088N	25	8A
B1821BH031C100N	21	3
B1821BH038C100N	24	3
	25	4
B1821BH038C125N	26	3
	29	3
B1821BH038C150N	5	3
	27	3
	29	3
B1821BH038C175N	25	4A
B1821BH038C225N	27	9
B1821BH038C600N	26	6
B1821BH050C138N	2	3
B1821BH050C175N	1	3
BOM-R12-8	29	3A
BOM-R8-10	28	2
BOM-R8-8	28	1
	30	3
CBA-70	20	20
CO-04HDE(4/4-4/12R)1290	BULK	2
FS0216B122-1	20	15
G9B	8	8
	9	7
GGG-H-86 TY1 OCLI	20	14
GRB58	20	18
GRC 58	20	17
HLP1053A	20	16
JANTXIN5619	6	17
JCG-6026	17	5
LC21CN3	8	2
LH80/1	8	1
M22759/16-16-9	BULK	19
M22759/16-20-9	BULK	16
M23053/5-104-0	BULK	9
M23053/5-105-0	BULK	12
M23053/5-105-9	BULK	11

PART NUMBER	FIG.	ITEM
M23053/5-107-9	BULK	8
M23053/5-108-0	BULK	10
M23053/5-108-4	BULK	14
M23053/5-111-0	BULK	7
M24243/1B403	22	14
	23	14
M24768/2-S-7	BULK	13
M39006/22-0631	6	18
M39029/49-329	15	9
M39029/49-331	15	8
M3BE510	3	7
M45938/1-13C	6	29
M5086/2-4-9	BULK	17
M5086/2-6-9	BULK	18
M55155/199G03	6	15
M5757/23-003	6	10
M6000E00200	BULK	6
	23	3
MEP 803A	1	5
	2	4
MEP 813A	1	5
	2	4
MGL100.R6-9	28	5
MGLP-R8-10	24	6
	28	8
MGLP-R8-6	28	16
MS1506-1	29	8
MS15567-2	8	3
MS15795-810	23	18
MS15795-812	21	2
MS15795-813	25	3B
	28	25
MS15795-817	2	2A
MS15795-841	6	3
	7	2
	11	6
	19	12
MS15795-848	15	3
	17	3
	19	7

PART NUMBER	FIG.	ITEM
MS16203-27	22	8
	23	8
MS16562-66	29	9
MS18015-1	11	2
	21	6
MS18212-65	12	5
MS20427-4C6	21	7
MS20600AD3W3	11	10
MS20600AD4W3	11	1
MS20613-4P5	21	5
MS20659-143	4	4
	4	12
	15	12
MS20659-145	4	3
	4	11
	14	2
	14	7
	14	12
	14	17
	14	21
	14	25
	15	11
MS21919WCG21	3	4
MS24519-7	22	4
	23	4
MS24524-30	10	3
MS24665-353	27	5
MS25036-101	6	20
	9	2
MS25036-106	16	3
MS25036-108	16	5
MS25036-110	16	2
MS25036-119	19	9
MS25036-122	20	22
	22	9
	23	9
MS25036-125	4	2
	4	10
	14	3
	14	8
	14	13
MS25036-155	16	4

PART NUMBER	FIG.	ITEM
MS27130-CR68	26	8
	26	10
MS27130-CR93	19	17
MS27183-27	27	2
MS27407-3	10	2
MS27969-4	21	8
MS3367-1-0	28	26
MS3367-1-9	15	15
MS3367-4-9	6	24
	16	6
MS35207-267	3	2
MS35307-414	2	3A
MS35308-334	21	3
MS35308-338	21	3
MS35308-360	25	4B
MS35333-110	22	11
	23	11
MS35333-113	13	2
MS35335-60	20	9
MS35338-103	22	6
	23	6
MS35338-135	6	6
	18	2
MS35338-136	6	13
MS35338-137	6	2
	7	3
	11	5
	19	13
MS35338-138	15	2
	17	2
	19	6
MS35338-140	21	1A
MS35338-143	2	1B
MS35338-158	23	17
MS35387-1	25	9
MS35387-2	25	10
MS35425-75	22	5
	23	5
MS3561-3	23	16

PART NUMBER	FIG.	ITEM
MS35649-244	6	5
	18	1
MS35649-264	19	1
MS35649-284	11	4
MS35650-302	3	1
MS35650-304	15	1
	17	1
	19	5
MS35650-3314	21	1
MS35650-3384	25	2
MS35691-35	12	1
MS35822-9A	BULK	4
MS35823-6A	BULK	5
MS35842-11	22	2
	23	2
	12	3
MS36338-141	25	2C
	28	24
MS39347-2	23	19
MS39347-4	12	3
MS51412-1	6	14
MS51412-13	26	13
MS51412-2	3	3
MS51412-25	21	2
MS51412-27	24	2A
	25	3A
	29	2
MS51412-4	25	7A
MS51412-7	5	2
	24	2
	25	3
	26	2
	29	2
MS51412-9	1	2
	2	2
MS51415-11	26	12
MS51415-9	1	4
MS51858-5	12	4
MS51859-5	12	6
MS51861-37	25	11
MS51922-1	25	6A

PART NUMBER	FIG.	ITEM
MS51922-17	5	1
	24	1
	25	2
	25	2A
	26	1
	27	1
	29	1
MS51922-33	1	1
	2	1
MS51922-9	21	1
MS51957-16	18	3
MS51957-18	6	8
MS51957-27	6	12
MS51957-31	19	2
MS51957-46	6	1
	7	1
	11	7
	19	11
MS51958-64	19	8
MS51958-67	15	4
	17	4
MS51968-23	26	11
MS51971-5	2	1A
MS90555C32413S	15	7
MS90555C32413SY	15	7
MS90563-3C	15	6
MSA37TB18	6	27
MSA37TB5	19	4
QQB575F30T0437	BULK	1
QQW343C06B1B	BULK	20
	20	21
	23	10
RER75F2490P	6	9
RER75F2491P	18	5
TBJA	10	1

END OF WORK PACKAGE

CHAPTER 8

OPERATOR AND FIELD SUPPORTING INFORMATION

FOR

10 kW 60 AND 400 Hz TRAILER-MOUNTED POWER UNITS AND POWER PLANTS

CHAPTER 8

SUPPORTING INFORMATION

WORK PACKAGE INDEX

OPERATOR AND FIELD MAINTENANCE

10 kW 60 AND 400 Hz TRAILER-MOUNTED POWER UNITS AND POWER PLANTS

REFERENCES

SCOPE

This work package lists all forms, regulations, pamphlets, specifications, standards, technical manuals, lubrication orders, and field manuals referenced in this manual.

FORMS

DA Form 2028	Recommended Changes to Publications and Blank Forms
DA Form 2028 (Web)	Recommended Changes to Equipment Technical Publications http://edm.monmouth.army.mil/pubs/2028.html.
DA Form 2062	Hand Receipt
DA Form 2404	Equipment Inspection and Maintenance Worksheet (Manual)
DA Form 5988-E	Equipment Inspection and Maintenance Worksheet (ULLS-G)
DA Form 2407	Maintenance Request
DA Form 2408	Equipment Log Assembly (Records)
DA Form 2408-9	Equipment Control Record
DA Form 2408-20	Oil Analysis Log
DD Form 314	Preventive Maintenance Schedule and Record
DD Form 1397	Processing and Deprocessing Record for Shipment, Storage, and Issue of Vehicles and Spare Engines
SF Form 361	Transportation Discrepancy Report
SF 368	Product Quality Deficiency Report
SF 368 (Web version)	https://aeps2.ria.army.mil/aepshome.cfm

DEPARTMENT OF THE ARMY PAMPHLETS

DA PAM 750-8	The Army Maintenance Management System (TAMMS)

MILITARY STANDARDS

MIL-STD-2000	Standard Requirements for Soldered Electrical and Electronic Assemblies

TECHNICAL MANUALS

TM 9-2330-202-14&P	Operator's Unit, Organizational, Direct Support and General Support Maintenance Manual (Including Repair Parts and Special Tools Lists), TRAILER, CARGO, ¾ Ton, 2-wheel M101A1 (NSN 2330-00-898-6779) M101A2 (NSN 2330-01-102-4697) M101A3 (NSN 2330-01-372-5641)
	TRAILER, CHASSIS, Ton, 2-wheel, M116A1 (NSN 2330-00-898-6780) M116A2 (NSN 2330-01-101-8434) M116A2E1 (NSN 2330-01-333-9773)
	TRAILER, CHASSIS, 1-Ton, 2-wheel M116A3 (NSN 2330-01-359-0080)
TM 9-2330-213-14&P	Operator's Unit, Organizational, Direct Support and General Support Maintenance Manual (Including Repair Parts and Special Tools Lists), TRAILER, CHASSIS: 1½ Ton, 2-wheel, M103A1 (NSN 2330-00-835-8629) M103A3 (NSN 2330-00-141-8052)
	TRAILER, CARGO: 1½ Ton, 2-wheel M105A1 (NSN 2330-00-835-8631) M107A2 (NSN 2330-00-141-8050) M107A2C (NSN 2330-00-542-5688)

	TRAILER, VAN, SHOP: FOLDING SIDES, 1½ Ton, 2-wheel M448 (NSN 2330-00-631-5692)
	Operator's Unit, Direct Support and General Support Maintenance Manual (Including Repair Parts and Special Tools Lists), TRAILER, CARGO: LIGHT, 2-wheel, M1101 (NSN 2330-01-387-5443)
	TRAILER, CARGO: HEAVY, 2-wheel, M1102 (NSN 2330-01-387-5426)
TM 9-2330-392-14&P	TRAILER, CHASSIS: 2-wheel, (NSN 2330-01-387-5424)
TM 9-6115-642-10	Operator's Manual, Generator Set, Skid Mounted, Tactical Quiet, 10 kW, 60/400 Hz MEP-803A (60 Hz) 6115-01-275-5061 MEP-813A (400 Hz) 6115-01-274-7392
TM 9-6115-642-24	Unit, Direct Support and General Support Maintenance Manual, Generator Set, Skid Mounted, Tactical Quiet, 10 kW, 60/400 Hz MEP-803A (60 Hz) 6115-01-275-5061 MEP-813A (400 Hz) 6115-01-274-7392
TM 9-6115-642-24P	Repair Parts and Special Tools List: Generator Set, Tactical Quiet, 10 kW, 60/400 Hz
TM 9-2815-253-24	Unit, Direct Support and General Support Maintenance Instructions for Diesel Engine, Model DN4M, 4 Cylinder 1.2 Liter (NSN 2815-01-350-2206)
TM 9-2815-253-24P	Unit, Direct Support and General Support Maintenance Repair Parts and Special Tools List: Diesel Engine, Model DN4M-1, 4 Cylinder 1.2 Liter (NSN 2815-01-350-2206)
TM 750-244-3	Procedures for Destruction of Electronics Materiel to Prevent Enemy Use (Mobility Equipment Command)

FIELD MANUALS

FM 4-25.11	First Aid
FM 20-31	Electrical Power Generation in the Field

MISCELLANEOUS PUBLICATIONS

CTA 8-100	Army Medical Department Expendable/Durable Items
CTA 50-970	Expendable Items (Except Medical Class V, Repair Parts, and Heraldic Items)

TECHNICAL BULLETINS

LO 9-6115-642-12	Lubrication Order: Generator Set, Skid Mounted, Tactical Quiet, 10 kW, MEP-803A (60 Hz), MEP-813A (400 Hz)
TB 9-6115-642-13	Winterization Kit (NSN 6115-01-477-0564) (EIC: N/A) Installed on Generator Kit, Skid Mounted, Tactical Quiet, 10 kW, 60 AND 400 Hz MEP-803A (60 Hz) (6115-01-275-0561) MEP-813A (400 Hz) (6115-01-274-7392)

END OF WORK PACKAGE

OPERATOR AND FIELD MAINTENANCE

10 kW 60 AND 400 Hz TRAILER-MOUNTED POWER UNITS AND POWER PLANTS

INTRODUCTION FOR STANDARD TWO-LEVEL MAINTENANCE MAC

MAINTENANCE ALLOCATION CHART (MAC)

INTRODUCTION

The Army Maintenance System MAC

This introduction provides a general explanation of all maintenance and repair functions authorized at the two maintenance levels under the Two-Level Maintenance System concept.

This MAC (immediately following the introduction) designates overall authority and responsibility for the performance of maintenance functions on the identified end item or component. The application of the maintenance functions to the end item or component shall be consistent with the capacities and capabilities of the designated maintenance levels, which are shown on the MAC in column (4) as:

Field - includes two subcolumns, Crew (C) and Maintainer (F).

Sustainment - includes two subcolumns, Below Depot (H) and Depot (D).

The maintenance to be performed at field and sustainment levels is described as follows:

1. Crew maintenance. The responsibility of a using organization to perform maintenance on its assigned equipment. It normally consists of inspecting, servicing, lubricating, adjusting, and replacing parts, minor assemblies, and subassemblies. The replace function for this level of maintenance is indicated by the letter "C" in the third position of the SMR code. A "C" appearing in the fourth position of the SMR code indicates complete repair is possible at the crew maintenance level.
2. Maintainer maintenance. Maintenance accomplished on a component, accessory, assembly, subassembly, plug-in unit, or other portion either on the system or after it is removed. The replace function for this level of maintenance is indicated by the letter "F" appearing in the third position of the SMR code. An "F" appearing in the fourth position of the SMR code indicates complete repair is possible at the field maintenance level. Items are returned to the user after maintenance is performed at this level.
3. Below depot sustainment. Maintenance accomplished on a component, accessory, assembly, subassembly, plug-in unit, or other portion either on the system or after it is removed. The replace function for this level of maintenance is indicated by the letter "H" appearing in the third position of the SMR code. An "H" appearing in the fourth position of the SMR code indicates complete repair is possible at the below depot sustainment maintenance level. Items are returned to the supply system after maintenance is performed at this level.
4. Depot sustainment . Maintenance accomplished on a component, accessory, assembly, subassembly, plug-in unit, or other portion either on the system or after it is removed. The replace function for this level of maintenance is indicated by the letter "D" or "K" appearing in the third position of the SMR code. Depot sustainment maintenance can be performed by either depot personnel or contractor personnel. A "D" or "K" appearing in the fourth position of the SMR code indicates complete repair is possible at the depot sustainment maintenance level. Items are returned to the supply systems after maintenance is performed at this level.

The tools and test equipment requirements table (immediately following the MAC) lists the tools and test equipment (both special tools and common tool sets) required for each maintenance function as referenced from the MAC.

The remarks table (immediately following the tools and test equipment requirements) contains supplemental instructions and explanatory notes for a particular maintenance function.

Maintenance Functions

Maintenance functions are limited to and defined as follows:

1. Inspect. To determine the serviceability of an item by comparing its physical, mechanical, and/or electrical characteristics with established standards through examination (e.g., by sight, sound, or feel). This includes scheduled inspection and gaugings and evaluation of cannon tubes.
2. Test. To verify serviceability by measuring the mechanical, pneumatic, hydraulic, or electrical characteristics of an item and comparing those characteristics with prescribed standards on a scheduled basis, i.e., load testing of lift devices and hydrostatic testing of pressure hoses.
3. Service. Operations required periodically to keep an item in proper operating condition; e.g., to clean (includes decontaminate, when required), to preserve, to drain, to paint, or to replenish fuel, lubricants, chemical fluids, or gases. This includes scheduled exercising and purging of recoil mechanisms. The following are examples of service functions:
   a. Unpack. To remove from packing box for service or when required for the performance of maintenance operations.
   b. Repack. To return item to packing box after service and other maintenance operations.
   c. Clean. To rid the item of contamination.
   d. Touch up. To spot paint scratched or blistered surfaces.
   e. Mark. To restore obliterated identification.
4. Adjust. To maintain or regulate, within prescribed limits, by bringing into proper position, or by setting the operating characteristics to specified parameters.
5. Align. To adjust specified variable elements of an item to bring about optimum or desired performance.
6. Calibrate. To determine and cause corrections to be made or to be adjusted on instruments of test, measuring, and diagnostic equipment used in precision measurement. Consists of comparisons of two instruments, one of which is a certified standard of known accuracy, to detect and adjust any discrepancy in the accuracy of the instrument being compared.
7. Remove/Install. To remove and install the same item when required to perform service or other maintenance functions. Install may be the act of emplacing, seating, or fixing into position a spare, repair part, or module (component or assembly) in a manner to allow the proper functioning of an equipment or system.
8. Paint (ammunition only). To prepare and spray color coats of paint so that the ammunition can be identified and protected. The color indicating primary use is applied, preferably, to the entire exterior surface as the background color of the item. Other markings are to be repainted as original so as to retain proper ammunition identification.
9. Replace. To remove an unserviceable item and install a serviceable counterpart in its place "Replace" is authorized by the MAC and assigned maintenance level is shown as the third position code of the Source, Maintenance and Recoverability (SMR) code.
10. Repair. The application of maintenance services, including fault location/troubleshooting, removal/installation, disassembly/assembly procedures and maintenance actions to identify troubles and restore serviceability to an item by correcting specific damage, fault, malfunction, or failure in a part, subassembly, module (component or assembly), end item, or system.

NOTE

The following definitions are applicable to the "repair" maintenance function:

Services. Inspect, test, service, adjust, align, calibrate, and/or replace.

Fault location/troubleshooting. The process of investigating and detecting the cause of equipment malfunctioning; the act of isolating a fault within a system or Unit Under Test (UUT).

Disassembly/assembly. The step-by-step breakdown (taking apart) of a spare/functional group coded item to the level of its least component, that is assigned an SMR code for the level of maintenance under consideration (i.e., identified as maintenance significant).

Actions. Welding, grinding, riveting, straightening, facing, machining, and/or resurfacing.

11. Overhaul. That maintenance effort (service/action) prescribed to restore an item to a completely serviceable/operational condition as required by maintenance standards in appropriate technical publications. Overhaul is normally the highest degree of maintenance performed by the Army. Overhaul does not normally return an item to like new condition.
12. Rebuild. Consists of those services/actions necessary for the restoration of unserviceable equipment to a like new condition in accordance with original manufacturing standards. Rebuild is the highest degree of material maintenance applied to Army equipment. The rebuild operation includes the act of returning to zero those age measurements (e.g., hours/miles) considered in classifying Army equipment/components.

Explanation of Columns in the MAC

Column (1) Group Number. Column (1) lists Functional Group Code (FGC) numbers, the purpose of which is to identify maintenance significant components, assemblies, subassemblies, and modules with the Next Higher Assembly (NHA).

Column (2) Component/Assembly. Column (2) contains the item names of components, assemblies, subassemblies, and modules for which maintenance is authorized.

Column (3) Maintenance Function. Column (3) lists the functions to be performed on the item listed in column (2). (For a detailed explanation of these functions refer to "Maintenance Functions" outlined above).

Column (4) Maintenance Level. Column (4) specifies each level of maintenance authorized to perform each function listed in column (3), by indicating work time required (expressed as manhours in whole hours or decimals) in the appropriate subcolumn. This work time figure represents the active time required to perform that maintenance function at the indicated level of maintenance. If the number or complexity of the tasks within the listed maintenance function varies at different maintenance levels, appropriate work time figures are to be shown for each level. The work time figure represents the average time required to restore an item (assembly, subassembly, component, module, end item, or system) to a serviceable condition under typical field operating conditions. This time includes preparation time (including any necessary disassembly/assembly time), troubleshooting/fault location time, and quality assurance time in addition to the time required to perform the specific tasks identified for the maintenance functions authorized in the MAC. The symbol designations for the various maintenance levels are as follows:

Field:

C Crew maintenance

F Maintainer maintenance

Sustainment:

L Specialized Repair Activity (SRA)

H Below depot maintenance

D Depot maintenance

NOTE

The "L" maintenance level is not included in column (4) of the MAC. Functions to this level of maintenance are identified by work time figure in the "H" column of column (4), and an associated reference code is used in the REMARKS column (6). This code is keyed to the remarks and the SRA complete repair application is explained there.

Column (5) Tools and Equipment Reference Code. Column (5) specifies, by code, those common tool sets (not individual tools), common Test, Measurement and Diagnostic Equipment (TMDE), and special tools, special TMDE and special support equipment required to perform the designated function. Codes are keyed to the entries in the tools and test equipment table.

Column (6) Remarks Code. When applicable, this column contains a letter code, in alphabetical order, which is keyed to the remarks table entries.

Explanation of Columns in the Tools and Test Equipment Requirements

Column (1) - Tool or Test Equipment Reference Code. The tool or test equipment reference code correlates with a code used in column (5) of the MAC.

Column (2) - Maintenance Level. The lowest level of maintenance authorized to use the tool or test equipment.

Column (3) - Nomenclature. Name or identification of the tool or test equipment.

Column (4) - National Stock Number (NSN). The NSN of the tool or test equipment.

Column (5) - Tool Number. The manufacturer's part number.

Explanation of Columns in the Remarks

Column (1) - Remarks Code. The code recorded in column (6) of the MAC.

Column (2) - Remarks. This column lists information pertinent to the maintenance function being performed as indicated in the MAC.

END OF WORK PACKAGE

OPERATOR AND FIELD MAINTENANCE

10 kW 60 AND 400 Hz TRAILER-MOUNTED POWER UNITS AND POWER PLANTS

MAC

Table 1. MAC for PU-798, PU-798A, PU-799, PU-799A and Power Plants AN/MJQ-37 and AN/MJQ-38.

(1)	(2)	(3)	(4) MAINTENANCE LEVEL				(5)	(6)
			FIELD		SUSTAINMENT			
			CREW	MAINTAINER	BELOW DEPOT	DEPOT		
GROUP NUMBER	COMPONENT / ASSEMBLY	MAINTENANCE FUNCTION	C	F	H	D	TOOLS AND EQUIPMENT REF CODE	REMARK CODES
00	POWER PLANT/ POWER UNIT	Inspect	0.2					A, B, C
		Inspect		0.2				A, B, C
		Inspect	0.1					A, D
		Inspect		0.1				A, D
0100	GENERATOR SET	Inspect	0.2					A
		Inspect		0.5				A
		Test		1.0				F, G
		Service	0.3					E, F, G
		Service		0.3				E, F, G
		Adjust		0.3				F, G
		Repair		1.5				E, F, G
		Remove		1.5			6, 9	
		Install		1.5			6, 9	
		Replace		1.5			6, 9	J
0200	ELECTRICAL SYS-TEM							
0201	POWER CABLES	Inspect		0.1				A
		Test		0.3			5, 9	
		Remove		0.5			9	
		Install		0.5			9	
		Repair		1.1			1, 6, 9	K
		Replace		0.5			9	J
0202	SWITCH BOX ASSEMBLY	Inspect	0.1					A
		Inspect		0.1				A
		Remove		0.5			9	
		Install		0.5			9	
		Repair		0.3			4, 9	
		Replace		0.5			9	J
020201	RELAY BOARD ASSEMBLY	Test		1.0			6, 9	
		Repair		1.0			6, 9	
02020101	RELAYS	Test		0.2			6, 9	
		Remove		0.1			9	
		Install		0.1			9	
		Replace		0.1			9	J
020202	RELAY, PERMISSIVE PARALLELING	Test		1.0			6, 9	
		Remove		0.5			9	
		Install		0.5			9	
		Replace		0.5			9	J
020203	LIGHTS/LAMPS	Test		0.2			5, 9	
		Remove		0.2			9	
		Install		0.2			9	
		Repair		0.3			5, 9	
		Replace		0.2			9	J
020204	SWITCHES	Test		0.2			5, 9	
		Remove		0.2			9	
		Install		0.2			9	
		Replace		0.2			9	J

Table 1. MAC for PU-798, PU-798A, PU-799, PU-799A and Power Plants AN/MJQ-37 and AN/MJQ-38. - Continued

(1)	(2)	(3)	(4) MAINTENANCE LEVEL				(5)	(6)
			FIELD		SUSTAINMENT			
			CREW	MAINTAINER	BELOW DEPOT	DEPOT		
GROUP NUMBER	COMPONENT / ASSEMBLY	MAINTENANCE FUNCTION	C	F	H	D	TOOLS AND EQUIPMENT REF CODE	REMARK CODES
020205	LEADS/HARNESSES	Test		0.3			6, 9	
		Remove		0.8			9	
		Install		0.8			9	
		Repair		0.9			1, 6, 9	
		Replace		0.8			9	J
020206	TERMINAL,LOAD	Inspect	0.1					A
		Inspect		0.1				A
		Remove		0.5			9	
		Install		0.5			9	
		Repair		0.2			9	
		Replace		0.5			9	J
020207	CONTACTOR	Test		0.2			6, 9	
		Remove		0.5			9	
		Install		0.5			9	
		Replace		0.5			9	J
020208	RESISTORS	Test		0.2			6, 9	
		Replace		0.4			9	
03	ACCESSORIES	Inspect	0.1					A, B, C, D, L
		Inspect		0.1				A, B, C, D, L
0301	BOX, ACCESSORY	Inspect	0.1					A
		Inspect		0.1				A
		Remove		0.2			9	
		Install		0.2			9	
		Repair		1.5			4, 9	
		Replace		0.2			9	J
04	TRAILER ASSEMBLY	Inspect	0.2					A, H, I, M
		Inspect		0.2				A, H, I, M
0401	FENDERS	Remove		3.0			3, 9	B, C, D, L
		Install		3.0			3, 9	B, C, D, L
		Repair		4.0			7, 8, 9	B, C, D, L
		Replace		3.0			3, 9	B, C, D, J, L
0402	TRAILER LEVELING-SUPPORT JACK	Inspect	0.1					A
		Inspect		0.1				A
		Service	0.3				9	A
		Service		0.2			9	A
		Remove		0.5			9	B, C, D
		Install		0.5			9	B, C, D
		Repair		0.8			3, 9	L
		Replace		0.5			3, 9	J

Table 2. Tools and Test Equipment Requirements for PU-798, PU-798A, PU-799, PU-799A and Power Plants AN/MJQ-37 and AN/MJQ-38.

TOOLS OR TEST EQUIPMENT	MAINTENANCE LEVEL	NOMENCLATURE	NATIONAL STOCK NUMBER	TOOL NUMBER
1	F	CRIMPING TOOL, HYDRAULIC, WIRE SIZE 8 THROUGH 4/0	5130-00-762-9100	MS25441
2	F	MULTIMETER (AN/PSM-45L)		
3	F	RIVET GUN, PNEUMATIC		
4	F	RIVETER, BLIND HEAD	5120-00-148-5847	
5	F	SHOP EQUIPMENT, AUTOMOTIVE MAINTENANCE AND REPAIR: ORGANIZATIONAL MAINTENANCE COMMON #1, LESS POWER	4910-00-754-0654	SC 4910-95-CL-A74
6	F	SHOP EQUIPMENT, ELECTRICAL REPAIR, SEMITRAILER MOUNTED	4940-00-294-9517	SC 4940-95-CL-B05
7	F	SHOP EQUIPMENT, WELDING, FIELD	3470-00-357-7268	SC 3470-95-CL-A08
8	F	TOOL KIT, BODY AND FENDER REPAIR	5180-00-357-7731	SC 5180-90-CL-N62
9	F	TOOL KIT, GENERAL MECHANIC'S AUTOMOTIVE OR STANDARD AUTOMOTIVE TOOL SET (SATS)	5180-00-177-7033	SC 5180-90-CL-N26

Table 3. Remarks for PU-798, PU-798A, PU-799, PU-799A and Power Plants AN/MJQ-37 and AN/MJQ-38.

REMARK CODES	REMARKS
A	Preventive Maintenance Checks and Service (PMCS).
B	AN/MJQ37 only.
C	AN/MJQ-38 only.
D	PU-798 and PU-799 only.
E	Refer to TM 9-6115-642-10 for generator set operator maintenance.
F	Refer to TM 9-6115-642-24 for generator set field and higher level maintenance.
G	Refer to TM 9-2815-253-24 for engine maintenance.
H	Refer to TM 9-2330-202-14&P for 1 ton trailer maintenance.
I	Refer to TM 9-2330-213-14&P for 1½ ton trailer maintenance.
J	Replace is the same as Removal and Installation.
K	Refer to WP 0055 through 0062 for repair.
L	PU-798A and PU-799A only
M	Refer to TM 9-2330-392-14&P for Light Tactical Trailer (LTT) maintenance.

END OF WORK PACKAGE

OPERATOR AND FIELD MAINTENANCE

10 kW 60 AND 400 Hz TRAILER-MOUNTED POWER UNITS AND POWER PLANTS

COMPONENTS OF END ITEM (COEI) AND BASIC ISSUE ITEMS (BII) LISTS

COMPONENTS OF END ITEM (COEI) AND BASIC ISSUE ITEMS (BII) LISTS

INTRODUCTION

Scope

This work package lists COEI and BII for the power plant/power unit to help you inventory items for safe and efficient operation of the equipment.

General

The COEI and BII information is divided into the following lists:

Components of End Item (COEI). This list is for information purposes only and is not authority to requisition replacements. These items are part of the power units and power plants. As part of the end item, these items must be with the end item whenever it is issued or transferred between property accounts. Items of COEI are removed and separately packaged for transportation or shipment only when necessary. Illustrations are furnished to help you find and identify the items.

Basic Issue Items (BII). These essential items are required to place the power units and power plants in operation, operate it, and to do emergency repairs. Although shipped separately packaged, BII must be with the power units and power plants during operation and when it is transferred between property accounts. Listing these items is your authority to request/requisition them for replacement based on authorization of the end item by the TOE/MTOE. Illustrations are furnished to help you find and identify the items.

Explanation of Columns in the COEI List and BII List

Column (1) Illus Number. Gives you the number of the item illustrated.

Column (2) National Stock Number (NSN). Identifies the stock number of the item to be used for requisitioning purposes.

Column (3) Description, Part Number/(CAGEC). Identifies the Federal item name (in all capital letters) followed by a minimum description when needed. The stowage location of COEI and BII is also included in this column. The last line below the description is the part number and the Commercial and Government Entity Code (CAGEC) (in parentheses).

Column (4) Usable On Code. When applicable, gives you a code if the item you need is not the same for different models of equipment. These codes are identified below:

CODE	USED ON
YJA	AN/MJQ-37
YHZ	AN/MJQ-38
YFL	PU-798
YFK	PU-799
YFT	PU-798A
FMH	PU-799A

Column (5) U/I. Unit of Issue (U/I) indicates the physical measurement or count of the item as issued per the National Stock Number shown in column (2).

Column (6) Qty Rqr. Indicates the quantity required.

Table 1. Components of End Item List.

(1) Illus Number	(2) National Stock Number (NSN)	(3) Description, Part Number / (CAGEC)	(4) Usable On Code	(5) U/I	(6) Qty Rqr
1	6115-01-319-9032	PU-798		EA	1
2	2330-01-473-1623	1 Ton Trailer, M116A3 93001A4000		EA	1
3	6115-01-275-5061	Generator, 10 kW, 60 Hz MEP-803A		EA	1
1	6115-01-413-3818	PU-798A		EA	1
2	2330-01-543-5794	Light Tactical Trailer 06008A0000		EA	1
3	6115-01-275-5061	Generator, 10 kW, 60 Hz MEP-803A		EA	1
1	6115-01-313-4283	PU-799		EA	1
2	2330-01-473-1623	1 Ton Trailer, M116A3 93001A4000		EA	1
3	6115-01-274-7392	Generator, 10 kW, 400 Hz MEP-813A		EA	1
1	6115-01-413-3819	PU-799A		EA	1
2	2330-01-543-5794	Light Tactical Trailer 06008A0000		EA	1
3	6115-01-274-7392	Generator, 10 kW, 400 Hz MEP-813A		EA	1
1	6115-01-299-6035	PP-AN/MJQ-37		EA	2
2	2330-00-141-8052	1.5 Ton Trailer, M103A3/A4 8358991		EA	1
3	6115-01-275-5061	Generator, 10 kW, 60 Hz MEP-803A		EA	2
4	5930-01-447-6646	Switch Box 13230E6535		EA	1
1	6115-01-313-4214	PP-AN/MJQ-38		EA	2
2	2330-00-141-8052	1.5 Ton Trailer, M103A3/A4 8358991		EA	1
3	6115-01-274-7392	Generator, 10 kW, 400 Hz MEP-813A		EA	2
4	5930-01-447-6646	Switch Box 13230E6535		EA	1

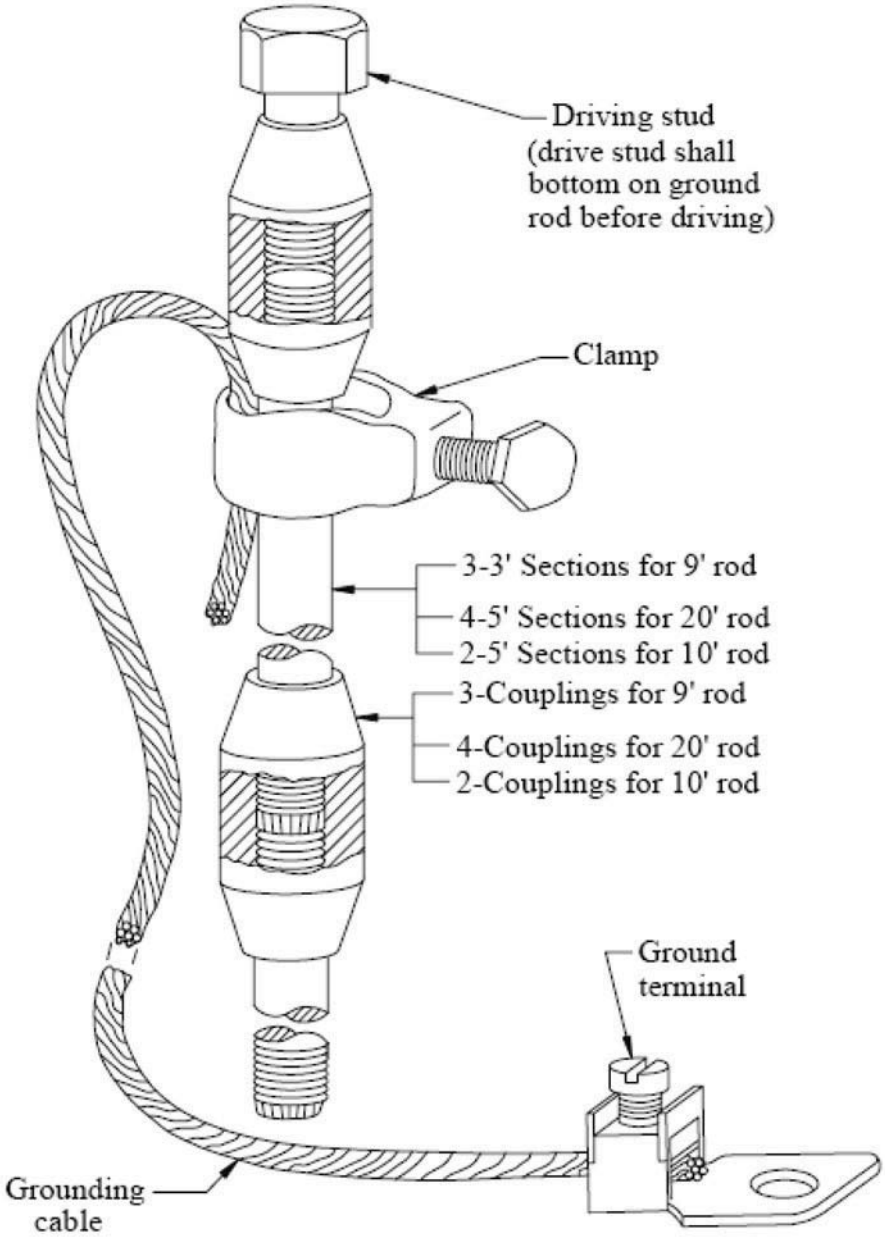

Figure 1. Item 9, Basic Issue Items, Rods, Ground (with attachments), Sectional 9 Ft.

*TM 9-6115-660-13&P

TECHNICAL MANUAL

OPERATOR AND FIELD MAINTENANCE MANUAL INCLUDING REPAIR PARTS AND SPECIAL TOOLS LIST

FOR

POWER UNIT, DIESEL ENGINE DRIVEN, 1 TON TRAILER MOUNTED,
10 kW, 60 Hz, PU-798
(NSN: 6115-01-319-9032) (EIC: VK5)
10 kW, 400 Hz, PU-799
(NSN: 6115-01-313-4283) (EIC: VK5)

POWER UNIT, DIESEL ENGINE DRIVEN LIGHT TACTICAL TRAILER MOUNTED,
10 kW, 60 Hz, PU-798A
(NSN: 6115-01-413-3818) (EIC: VNC)
10 kW, 400 Hz, PU-799A
(NSN: 6115-01-413-3819) (EIC: VDW)

POWER PLANT, DIESEL ENGINE DRIVEN 1½ TON TRAILER MOUNTED,
10 kW, 60 Hz, AN/MJQ-37
(NSN: 6115-01-299-6035) (EIC: VK2)
10 kW, 400 Hz, AN/MJQ-38
(NSN: 6115-01-313-4214) (EIC: VK3)

*SUPERSEDURE NOTICE - This manual supersedes TM 9-6115-660-13&P dated 30 March 2009.

DISTRIBUTION STATEMENT A - Approved for public release; distribution is unlimited.

HEADQUARTERS, DEPARTMENT OF THE ARMY
15 OCTOBER 2010

Figure 2. Item 11, Basic Issue Items, TM 9-6115-660-13&P.

NOTE

The following UOCs apply to all illustrations on the BII list, YJV, 91D, 91E, YFW, YEZ, FMG and YFV.

Table 2. Basic Issue Items List.

(1) Illus Number	(2) National Stock Number (NSN)	(3) Description, Part Number / (CAGEC)	(4) Usable On Code	(5) U/I	(6) Qty Rqr
1	5342-00-066-1235	Adapter Assy, Fuel Drum 13211E7541 (06076)		EA	1/2
2	4730-01-470-2409	Clamp, Hose, Low Pressure, Type F, Size 12, SAE J1508 88-20561-2 (30554)		EA	1/2
3	4730-00-809-9703	Elbow, Pipe to Hose 13236380-4 (97403)		EA	1/2
4	4210-01-361-6921	Extinguisher, Fire, Carbon Dioxide 322 (54905)		EA	1/2
5	5120-00-251-4489	Hammer, Hand, Engineers, Double, 8# A-A-1293 (58536)		EA	1/2
6	4720-01-386-4210	Hose, Nonmetallic 160-12-24 (98441)		EA	1/2
7	4710-00-185-6948	Pipe 13211E7543 (97403)		EA	1/2
8	4710-00-597-8731	Pipe, Extension 13211E7542 (97403)		EA	1/2
9	5975-00-878-3791	Rods, Ground (w/attachments), Sectional 9 Ft. A-A-55804-III-B (58536)		EA	1/2
10	5120-01-013-1676	Slide Hammer, Ground Rod 13226E7741 (97403)		EA	1/2
11		TM 9-6115-660-13&P		EA	1/2

END OF WORK PACKAGE

OPERATOR MAINTENANCE

10 kW 60 AND 400 Hz TRAILER-MOUNTED POWER UNITS AND POWER PLANTS

ADDITIONAL AUTHORIZATION LIST (AAL)

ADDITIONAL AUTHORIZATION LIST (AAL)

INTRODUCTION

Scope

This work package lists additional items you are authorized for the support of the power plant/power.

General

This list identifies items that do not have to accompany the power plant/power and that do not have to be turned in with it. These items are all authorized to you by CTA, MTOE, TDA, or JTA.

Explanation of Entries in the AAL

Column (1) National Stock Number (NSN). Identifies the stock number of the item to be used for requisitioning purposes.

Column (2) Description, Part Number/(CAGEC). Identifies the Federal item name (in all capital letters) followed by a minimum description when needed. The last line below the description is the part number and the Commercial and Government Entity Code (CAGEC) (in parentheses).

Column (3) Usable On Code. When applicable, gives you a code if the item you need is not the same for different models of equipment. These codes are identified below:

CODE	USED ON
YJA	AN/MJQ-37
YHZ	AN/MJQ-38
YFL	PU-798
YFK	PU-799
YFT	PU-798A
FMH	PU-799A

NOTE

All six "usable on" codes listed above apply to all illustrations on the AAL list.

Column (4) U/I. Unit of Issue (U/I) indicates the physical measurement or count of the item as issued per the National Stock Number shown in column (1).

Column (5) Qty Recm. Indicates the quantity recommended.

Table 1. Additional Authorization List.

(1) National Stock Number (NSN)	(2) Description, Part Number / (CAGEC)	(3) Usable On Code	(4) U/I	(5) Qty Recm
5342-00-066-1235	ADAPTER, CONTAINER 13211E7541 (97403)		EA	1
5999-00-186-3912	CLAMP		EA	1
5975-00-794-2523	COUPLINGS, (THREE IN SET)		EA	1
5975-00-924-9927	DRIVE/HEAD STUD		EA	1
4210-00-361-6921	EXTINGUISHER, FIRE, CARBON DIOXIDE 5 LB 322 (54905)		EA	1
7240-00-177-6154	FLEXIBLE SPOUT		EA	1
7240-01-337-5269	FUEL CAN		EA	1
5940-00-271-9504	GROUND TERMINAL LUG		EA	1
5120-01-013-1676	HAMMER, SLIDE 0116-1810 (93742)		EA	1
5310-01-365-5788	NUT, SELF LOCKING HEXAGON, PREVAILING TORQUE 88-21930-2 (30554)		EA	1
4710-00-185-6948	PIPE 13211E7543 (97403)		EA	1
4710-00-597-8731	PIPE, EXTENSION 1311E7542 (97403)		EA	1
5975-00-878-3791	RODS, GROUND (W/ATTACHMENTS) SECTIONAL 9 FT AA55804-III-B (58536)		EA	1
5310-01-477-1264	WASHER, FLAT 88-20564-15 (30554)		EA	1
6145-00-395-8799	WIRE, ELECTRICAL NO. 6 AWG, 7 STRANDS, CLASS B, TEMPER, 6 FT LONG ASTM B8		EA	1
5100-00-494-1911	WRENCH, PLIER, CURVED JAW GGG-W-00649, TYPE 1, CLASS 2, STYLE B (81348)		EA	2

END OF WORK PACKAGE

OPERATOR AND FIELD MAINTENANCE

10 kW 60 AND 400 Hz TRAILER-MOUNTED POWER UNITS AND POWER PLANTS

EXPENDABLE AND DURABLE ITEMS LIST

EXPENDABLE AND DURABLE ITEMS LIST

Scope

This work package lists expendable and durable items that you will need to operate and maintain the Power Plants AN/MJQ-37 and AN/MJQ-38, and Power Units PU-798, PU-798A, PU-799 and PU-799A. This list is for information only and is not authority to requisition the listed items. These items are authorized to you by CTA 50-970, Expendable/Durable Items (Except Medical, Class V Repair Parts, and Heraldic Items), CTA 50-909, Field and Garrison Furnishings and Equipment or CTA 8-100, Army Medical Department Expendable/Durable Items.

Explanation of Columns in the Expendable/Durable Items List

Column (1) Item No. This number is assigned to the entry in the list and is referenced in the narrative instructions to identify the item (e.g., Use brake fluid (WP 0098, item 5)).

Column (2) Level. This column identifies the lowest level of maintenance that requires the listed item (include as applicable: C = Crew, O = AMC, F = Maintainer or ASB, H = BelowDepot or TASMG, D = Depot).

Column (3) National Stock Number (NSN). This is the NSN assigned to the item which you can use to requisition it.

Column (4) Item Name, Description, Part Number/(CAGEC). This column provides the other information you need to identify the item. The last line below the description is the part number and the Commercial and Government Entity Code (CAGEC) (in parentheses).

Column (5) U/I. Unit of Issue (U/I) code shows the physical measurement or count of an item, such as gallon, dozen, gross, etc.

Table 1. Expendable and Durable Items List.

(1) Item No.	(2) Level	(3) National Stock Number (NSN)	(4) Item Name, Description, Part Number / (CAGEC)	(5) U/I
1	F	8040-00-664-4318	Adhesive 9995460 (18876)	EA
2	F	6850-01-331-3349	Cleaning compound, solvent P-D-680 (81348)	EA
3	F	6850-01-331-3350	Cleaning compound, solvent P-D-680 (81348)	EA
4	F	9150-00-190-0904	Grease, Automotive/artillery GAA MIL-PRF-10924 (81349)	EA
5	F	9150-00-189-6727	Oil, Lubrication OE/HDO-10 MIL-PRF-2104 (81349)	EA
6	F	7920-00-140-0869	Rags, Wiping 8722-0088 (03950)	EA
7	F		Solder SN60PB40 (81348)	EA

END OF WORK PACKAGE

OPERATOR AND FIELD MAINTENANCE

10 kW 60 AND 400 Hz TRAILER-MOUNTED POWER UNITS AND POWER PLANTS

MANDATORY REPLACEMENT PARTS LIST

SCOPE

This work package lists all parts used on the high mobility trailer that must be discarded when removed during maintenance and installed new.

GENERAL

All mandatory replacement parts are listed by Item Number, Nomenclature, and Part Number.

Table 1. Mandatory Replacement Parts List.

Item No.	Part Number / (CAGEC)	National Stock Number (NSN)	Nomenclature	Qty
1	AD45ABS	5320-00-052-1972	Rivet	
2	BOM-R8-8	5320-00-483-0558	Rivet, Blind (1/4 .470-.531)	
3	BOM-R8-10	5320-01-140-149	Rivet, Blind (1/4 .595-.656)	
4	MGL100-R6-9		Rivet, Blind (3/16 .305-.500)	
5	BOM-R12-8		Rivet, Blind (3/8 .438-.562)	
6	MGLP-R8-6	5320-01-215-9148	Rivet, Steel Shank (1/4 .080-.375)	
7	MGLP-R8-10	5315-01-466-4174	Rivet, Steel Shank (1/4 .350-.625)	
8	MS-3367-1-0	5975-00-984-6582	Strap, Tiedown, Electrical Component	
9	MS35338-143	5310-00-933-8778	Washer, Lock (1/2)	
10	MS35338-158	5310-00-883-9417	Washer, Lock (1/4)	
11	MS35338-141	5310-00-984-7042	Washer, Lock (3/8)	
12	MS35338-140	5310-00-934-9765	Washer, Lock (5/16)	

END OF WORK PACKAGE

INDEX

INDEX

INDEX

RECOMMENDED CHANGES TO PUBLICATIONS AND BLANK FORMS For use of this form, see AR 25-30; the proponent agency is OAASA	Use Part II *(reverse)* for Repair Parts and Special Tool Lists (RPSTL) and Supply Catalogs/Supply Manuals (SC/SM).	DATE 30 August 2002
TO: *(Forward to proponent of publication or form) (Include ZIP Code)* Commander, US Army C-E LCMC ATTN: AMSEL-LC-LEO-E-ED Fort Monmouth, NJ 07703-5006	**FROM:** *(Activity and location) (Include ZIP Code)* Jane Q. Doe, SFC 1234 Any Street Anytown, AL 34565	

PART I - ALL PUBLICATIONS (EXCEPT RPSTL AND SC/SM) AND BLANK FORMS

PUBLICATION/FORM NUMBER	DATE	TITLE
TM 11-1234-567-14	16 Sep 2001	Operator, Field and Sustainment Support Maintenance Manual for Radio, AN/ABC-123

ITEM	PAGE	PARA-GRAPH	LINE	FIGURE NO.	TABLE	RECOMMENDED CHANGES AND REASON
1	WP0005 Pg 3		3			Test or Corrective Action column should identify a different WP number.

EXAMPLE

TYPED NAME, GRADE OR TITLE	TELEPHONE EXCHANGE/AUTOVON, PLUS EXTENSION	SIGNATURE
Jane Q. Doe, SFC	123-4567	

DA FORM 2028, FEB 74 REPLACES DA FORM 2028, 1 DEC 68, WHICH WILL BE USED. ARD V4.00

TO: *(Forward to proponent of publication or form) (Include ZIP Code)*	FROM: *(Activity and location) (Include ZIP Code)*	DATE

PART II- REPAIR PARTS AND SPECIAL TOOL LISTS AND SUPPLY CATALOGS/SUPPLY MANUALS

PUBLICATION/FORM NUMBER	DATE	TITLE

PAGE NO.	COLM NO.	LINE NO.	NATIONAL STOCK NUMBER	REFERENCE NO.	FIGURE NO.	ITEM NO.	TOTAL NO. OF MAJOR ITEMS SUPPORTED	RECOMMENDED ACTION

PART III - REMARKS *(Any general remarks or recommendations, or suggestions for improvement of publications and blank forms. Additional blank sheets may be used if more space is needed.)*

TYPED NAME, GRADE OR TITLE	TELEPHONE EXCHANGE/AUTOVON, PLUS EXTENSION	SIGNATURE

APD V4.00

RECOMMENDED CHANGES TO PUBLICATIONS AND BLANK FORMS For use of this form, see AR 25-30; the proponent agency is OAASA	Use Part II *(reverse)* for Repair Parts and Special Tool Lists (RPSTL) and Supply Catalogs/Supply Manuals (SC/SM).	DATE
TO: *(Forward to proponent of publication or form) (Include ZIP Code)*	**FROM:** *(Activity and location) (Include ZIP Code)*	

PART I - ALL PUBLICATIONS (EXCEPT RPSTL AND SC/SM) AND BLANK FORMS

PUBLICATION/FORM NUMBER	DATE	TITLE

ITEM	PAGE	PARA-GRAPH	LINE	FIGURE NO.	TABLE	RECOMMENDED CHANGES AND REASON

TYPED NAME, GRADE OR TITLE	TELEPHONE EXCHANGE/AUTOVON, PLUS EXTENSION	SIGNATURE

DA FORM 2028, FEB 74 REPLACES DA FORM 2028, 1 DEC 68, WHICH WILL BE USED. APD V4.00

TO: *(Forward to proponent of publication or form) (Include ZIP Code)*	**FROM:** *(Activity and location) (Include ZIP Code)*	**DATE**

PART II- REPAIR PARTS AND SPECIAL TOOL LISTS AND SUPPLY CATALOGS/SUPPLY MANUALS

PUBLICATION/FORM NUMBER	DATE	TITLE

PAGE NO.	COLM NO.	LINE NO.	NATIONAL STOCK NUMBER	REFERENCE NO.	FIGURE NO.	ITEM NO.	TOTAL NO. OF MAJOR ITEMS SUPPORTED	RECOMMENDED ACTION

PART III - REMARKS *(Any general remarks or recommendations, or suggestions for improvement of publications and blank forms. Additional blank sheets may be used if more space is needed.)*

TYPED NAME, GRADE OR TITLE	TELEPHONE EXCHANGE/AUTOVON, PLUS EXTENSION	SIGNATURE

APD V4.00

RECOMMENDED CHANGES TO PUBLICATIONS AND BLANK FORMS For use of this form, see AR 25-30; the proponent agency is OAASA	Use Part II *(reverse)* for Repair Parts and Special Tool Lists (RPSTL) and Supply Catalogs/Supply Manuals (SC/SM).	DATE
TO: *(Forward to proponent of publication or form) (Include ZIP Code)*	**FROM:** *(Activity and location) (Include ZIP Code)*	

PART I - ALL PUBLICATIONS (EXCEPT RPSTL AND SC/SM) AND BLANK FORMS

PUBLICATION/FORM NUMBER	DATE	TITLE

ITEM	PAGE	PARA-GRAPH	LINE	FIGURE NO.	TABLE	RECOMMENDED CHANGES AND REASON

TYPED NAME, GRADE OR TITLE	TELEPHONE EXCHANGE/AUTOVON, PLUS EXTENSION	SIGNATURE

DA FORM 2028, FEB 74 REPLACES DA FORM 2028, 1 DEC 68, WHICH WILL BE USED. APD V4.00

TO: *(Forward to proponent of publication or form) (Include ZIP Code)*	**FROM:** *(Activity and location) (Include ZIP Code)*	**DATE**

PART II- REPAIR PARTS AND SPECIAL TOOL LISTS AND SUPPLY CATALOGS/SUPPLY MANUALS

PUBLICATION/FORM NUMBER	DATE	TITLE

PAGE NO.	COLM NO.	LINE NO.	NATIONAL STOCK NUMBER	REFERENCE NO.	FIGURE NO.	ITEM NO.	TOTAL NO. OF MAJOR ITEMS SUPPORTED	RECOMMENDED ACTION

PART III - REMARKS *(Any general remarks or recommendations, or suggestions for improvement of publications and blank forms. Additional blank sheets may be used if more space is needed.)*

TYPED NAME, GRADE OR TITLE	TELEPHONE EXCHANGE/AUTOVON, PLUS EXTENSION	SIGNATURE

APD V4.00

RECOMMENDED CHANGES TO PUBLICATIONS AND BLANK FORMS For use of this form, see AR 25-30; the proponent agency is OAASA	Use Part II *(reverse)* for Repair Parts and Special Tool Lists (RPSTL) and Supply Catalogs/Supply Manuals (SC/SM).	DATE
TO: *(Forward to proponent of publication or form) (Include ZIP Code)*	**FROM:** *(Activity and location) (Include ZIP Code)*	

PART I - ALL PUBLICATIONS (EXCEPT RPSTL AND SC/SM) AND BLANK FORMS

PUBLICATION/FORM NUMBER	DATE	TITLE

ITEM	PAGE	PARA-GRAPH	LINE	FIGURE NO.	TABLE	RECOMMENDED CHANGES AND REASON

TYPED NAME, GRADE OR TITLE	TELEPHONE EXCHANGE/AUTOVON, PLUS EXTENSION	SIGNATURE

DA FORM 2028, FEB 74 REPLACES DA FORM 2028, 1 DEC 68, WHICH WILL BE USED. APD V4.00

TO: *(Forward to proponent of publication or form) (Include ZIP Code)*	**FROM:** *(Activity and location) (Include ZIP Code)*	**DATE**

PART II- REPAIR PARTS AND SPECIAL TOOL LISTS AND SUPPLY CATALOGS/SUPPLY MANUALS

PUBLICATION/FORM NUMBER	DATE	TITLE

PAGE NO.	COLM NO.	LINE NO.	NATIONAL STOCK NUMBER	REFERENCE NO.	FIGURE NO.	ITEM NO.	TOTAL NO. OF MAJOR ITEMS SUPPORTED	RECOMMENDED ACTION

PART III - REMARKS *(Any general remarks or recommendations, or suggestions for improvement of publications and blank forms. Additional blank sheets may be used if more space is needed.)*

TYPED NAME, GRADE OR TITLE	TELEPHONE EXCHANGE/AUTOVON, PLUS EXTENSION	SIGNATURE

APD V4.00

By Order of the Secretary of the Army:

GEORGE W. CASEY, JR
General, United States Army
Chief of Staff

Official:

JOYCE E. MORROW
Administrative Assistant to the
Secretary of the Army
1024533

DISTRIBUTION:

To be distributed in accordance with the initial distribution number (IDN) 256176, requirements for TM 9-6115-660-13&P.

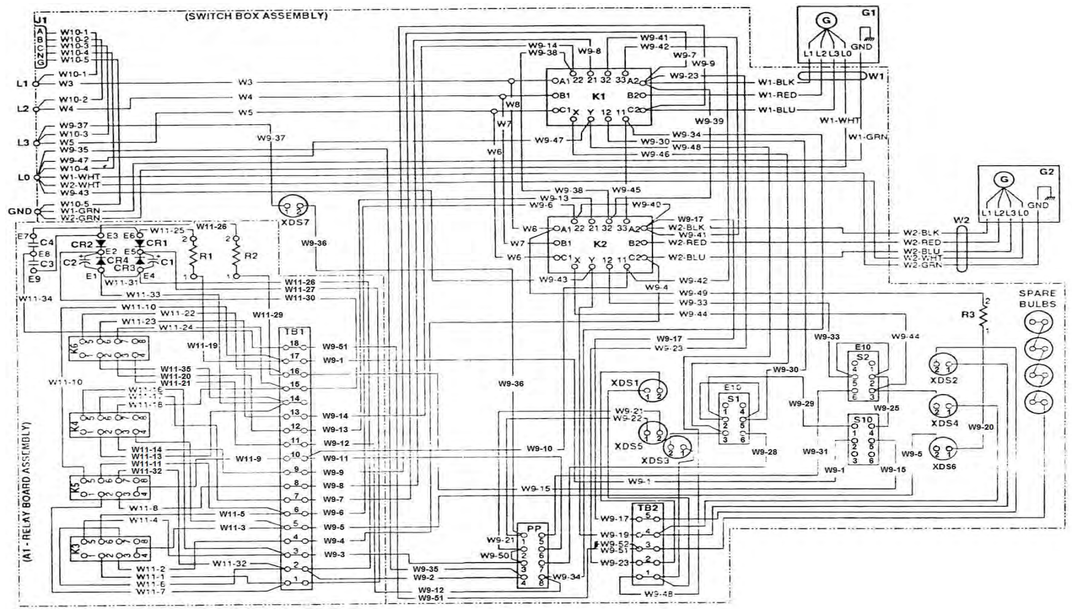

COMPONENT REFERENCE LIST		
REF DES	PART NO.	DESCRIPTION
XDS1-XDS4	13229E5764-2	LIGHT AND WIRE
XDS5-XDS7	LH80/1 (HOUSING) LC22CN3 (LENS) MIL-L-3661/38 AT.D./22	LAMP HOLDER
DS5-DS7	656DC (120) A.A.50452	LAMP, INCANDESENT
E1-E9	MS5155/199G03	TERMINAL, STUD
E10	STYLE TBJA MIL-T-55164/28	BUS CONTACTOR
K1, K2	13229E5639	CONTACTOR
K3, K4 K5, K6	MS75723-003 MIL-R-5757/23	RELAY, DPDT
PP	13229E5653	RELAY, PERMISSIVE, PARALLELING
S1, S2	MS27407-3	SWITCH, TOGGLE
S10	MS24524-30	SWITCH, TOGGLE
G1,G2	SEE TABULATION	SEE TABULATION
L0-L3, GND	MS39347-4	TERMINAL, POST, SERVICE AND GROUND
J1	SEE TABULATION	CONNECTOR, RECEPTACLE
R1, R2	RER75F2490P MIL-R-39009/1	RESISTOR
R3	RER75F2491P MIL-R-39009/1	RESISTOR
CR1, CR2 CR3, CR4	JANTX1N5619 MIL-S-19500/429	DIODE
XK3-XK6	13222E9686	SOCKET RELAY
W1	SEE TABULATION	CABLE ASSEMBLY
W2	SEE TABULATION	CABLE ASSEMBLY
W3	13229E5828-1	LEAD, ELECTRICAL
W4	13229E5828-2	LEAD, ELECTRICAL
W5	13229E5828-3	LEAD, ELECTRICAL
W6, W8	13229E5672	JUMPER, ELECTRICAL
W7	13229E5656	JUMPER, ELECTRICAL
W9	13229E5831	HARNESS ASSEMBLY, SWITCH BOX
W10	SEE TABULATION	HARNESS ASSEMBLY, OUTPUT CONNECTOR
W11	13229E5829	HARNESS ASSEMBLY, RELAY BOARD
A1	13229E5830	RELAY BOARD ASSEMBLY
TB1	37TB18B MIL-T-55164/1	TERMINAL BOARD
TB2	37TB58 MIL-T-55164/1	TERMINAL BOARD
C1, C2	M39006/22-0411 MIL-C-39006/22	CAPACITOR
C3 C4	13229E5648	CAPACITOR

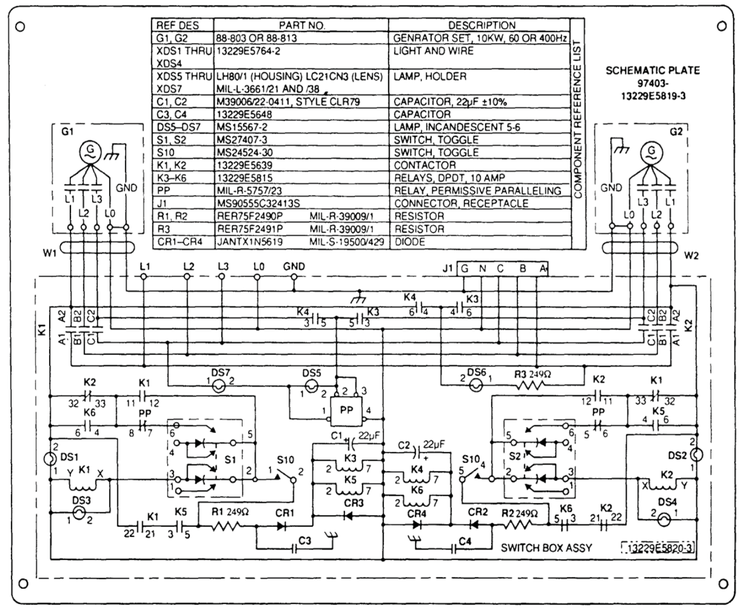

REF DES	PART NO.		DESCRIPTION
G1, G2	88-803 OR 88-813		GENRATOR SET, 10KW, 50 OR 400Hz
XDS1 THRU XDS4	13229E5764-2		LIGHT AND WIRE
XDS5 THRU XDS7	LH80/1 (HOUSING) LC21CN3 (LENS) MIL-L-3661/21 AND /38		LAMP, HOLDER
C1, C2	M39006/22-0411, STYLE CLR79		CAPACITOR, 22µF ±10%
C3, C4	13229E5648		CAPACITOR
DS5–DS7	MS15567-2		LAMP, INCANDESCENT 5-6
S1, S2	MS27407-3		SWITCH, TOGGLE
S10	MS24524-30		SWITCH, TOGGLE
K1, K2	13229E5639		CONTACTOR
K3–K6	13229E5815		RELAYS, DPDT, 10 AMP
PP	MIL-R-5757/23		RELAY, PERMISSIVE PARALLELING
J1	MS90555C32413S		CONNECTOR, RECEPTACLE
R1, R2	RER75F2490P	MIL-R-39009/1	RESISTOR
R3	RER75F2491P	MIL-R-39009/1	RESISTOR
CR1–CR4	JANTX1N5619	MIL-S-19500/429	DIODE

COMPONENT REFERENCE LIST

THE METRIC SYSTEM AND EQUIVALENTS

LINEAR MEASURE

1 Centimeter = 10 Millimeter = 0.01 Meters = 0.3937 inches
1 Meter = 100 Centimeters = 1000 Millimeters = 39.37 inches
1 kilometer = 1000 Meters = 0.621 Miles

WEIGHTS

1 Gram = 0.001 Kilograms = 1000 Milligrams = 0.035 Ounces
1 Kilogram = 100 Grams = 2.2 lb.1 Cu. Meter = 1,000,000
1 Metric Ton = 1000 Kilograms = 1 Megagram = 1.1 Short Tons

LIQUID MEASURE

1 Millimeter = 0.001 Liters = 0.0338 Fluid Ounces
1 Liter = 1000 Millimeters = 32.82 Fluid Ounces

SQUARE MEASURE

1 Sq. Centimeter = 100 Sq. Millimeter = 0.155 Sq. Inches
1 Sq. Meter = 10,000 Sq. Centimeters = 10.76 Sq. Inches
1 Sq. Kilometer = 1,000,000 Sq. Meters = 0.386 Sq. Miles

CUBIC MEASURE

1 Cu. Centimeter = 1000 Cu. Millimeters = 0.06 Cu. Inches
1 Cu. Centimeters = 35.31 Cu. Feet

TEMPERATURE

5/9 (°F - 32) = °C
212° Fahrenheit is equivalent to 100° Celsius
90° Fahrenheit is equivalent to 32.2° Celsius
32° Fahrenheit is equivalent to 0° Celsius
9/5 °C + 32 = °F

APPROXIMATE CONVERSION FACTORS

TO CHANGE	TO	MULTIPLY BY
Inches	Centimeters	2.540
Feet	Meters	0.305
Yards	Meters	0.914
Miles	Kilometers	1.609
Square Inches	Square Centimeters	6.451
Square Feet	Square Meters	0.093
Square Yards	Square Meters	0.836
Square Miles	Square Kilometers	2.590
Acres	Square Hectometers	0.405
Cubic Feet	Cubic Meters	0.028
Cubic Yards	Cubic Meters	0.765
Fluid Ounces	Milliliters	29.573
Pints	Liters	0.473
Quarts	Liters	0.946
Gallons	Liters	3.785
Ounces	Grams	28.349
Pounds	Kilograms	0.454
Short Tons	Metric Tons	0.907
Pound-Feet	Newton-Meters	1.356
Pounds per Square Inch	Kilo pascals	6.895
Miles per Gallon	Kilometers per Liter	0.425
Miles per Hour	Kilometers per Hour	1.609

TO CHANGE	TO	DIVIDE BY
Centimeters	Inches	2.540
Meters	Feet	0.305
Meters	Yards	0.914
Kilometers	Miles	1.609
Square Centimeters	Square Inches	6.451
Square Meters	Square Feet	0.093
Square Meters	Square Yards	0.836
Square Kilometers	Square Miles	2.590
Square Hectometers	Acres	0.405
Cubic Meters	Cubic Feet	0.028
Cubic Meters	Cubic Yards	0.765
Milliliters	Fluid Ounces	29.573
Liters	Pints	0.473
Liters	Quarts	0.946
Liters-Meters	Gallons	3.785
Grams	Ounces	28.349
Kilograms	Pounds	0.454
Metric Tons	Short Tons	0.907
Newton-Meters	Pound-Feet	1.356
Kilo pascals	Pounds per Square Inch	6.895
Kilometers per Liter	Miles per Gallon	0.425
Kilometers per Hour	Miles per Hour	1.609

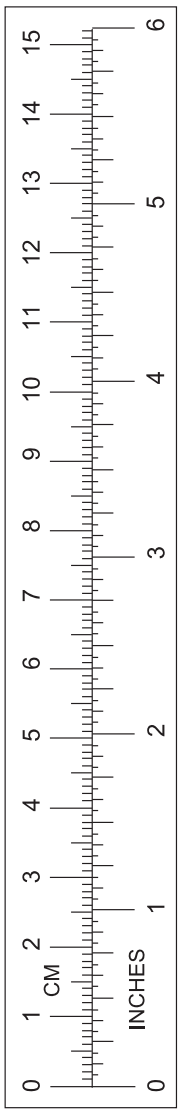

FBCMI_4014_01

PIN: 071917-000