TM 9-2320-218-34-1

TECHNICAL MANUAL

DIRECT SUPPORT AND
GENERAL SUPPORT MAINTENANCE

TRUCK, 1/4-TON, 4X4,
M151A2 SERIES

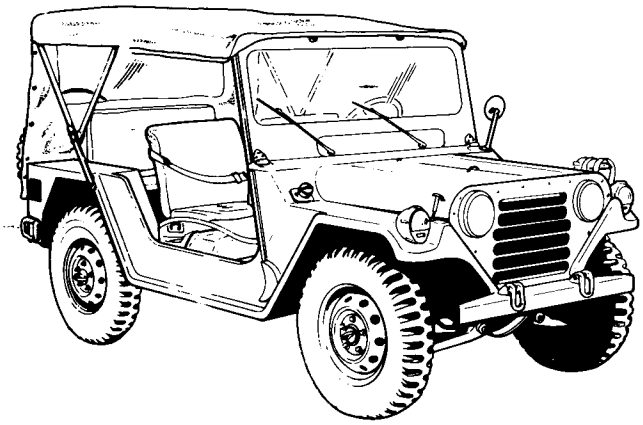

This copy is a reprint which includes current pages from Change 1.

TRUCK, UTILITY: 1/4-TON, 4X4,
M151A2 (2320-00-177-9258);

TRUCK, UTILITY: 1/4-TON, 4X4,
M825 (2320-00-177-9257) WITH
106MM RECOILLESS RIFLE;

TRUCK, AMBULANCE, FRONT LINE:
1/4-TON, 4X4, M718A1
(2310-00-177-9256).

HEADQUARTERS, DEPARTMENT OF THE ARMY AUGUST 1982

WARNING

EXHAUST GASES CAN KILL!

1. DO NOT operate your vehicle engine in enclosed area.
2. DO NOT idle vehicle engine with cab windows closed.
3. DO NOT drive vehicle with inspection plates or cover plates removed.
4. BE ALERT at all times for exhaust odors.
5. BE ALERT for exhaust poisoning symptoms, they are:

   Headache

   Dizziness

   Sleepiness

   Loss of Muscular Control

6. If YOU SEE another person with exhaust poisoning symptoms:

   Remove person from area.

   Expose to open air.

   Keep person warm.

   Do not permit person to move.

   Administer artificial respiration, if necessary.*

*For artificial respiration, refer to FM 21-11.

CHANGE No. 1

HEADQUARTERS
DEPARTMENT OF THE ARMY
WASHINGTON, D C , 3 June 1983

Direct Support and General Support Maintenance Manual
for

TRUCK, UTILITY 1/4-TON, 4X4, M151A2
(2320-00-177-9258)
TRUCK, UTILITY 1/4-TON, 4X4, M825
(2320-00-177-9257)
106-MM RECOILLESS RIFLE:
TRUCK, AMBULANCE, FRONTLINE
1/4-TON, 4X4, M718A1
(2310-00-177-9256)

TM 9-2320-218-34-1, 11 August 1982 , is changed as follows:

Cover 1. Lower right corner. Insert date, "AUGUST 1982".

Page i, following Washington, D C , insert date, "11 August 1982".

WARNING

EXHAUST GASES CAN KILL!

1. DO NOT operate your vehicle engine in enclosed area.
2. DO NOT idle vehicle engine with cab windows closed.
3. DO NOT drive vehicle with inspection plates or cover plates removed.
4. BE ALERT at all times for exhaust odors.
5. BE ALERT for exhaust poisoning symptoms, they are:

   Headache

   Dizziness

   Sleepiness

   Loss of Muscular Control

6. If YOU SEE another person with exhaust poisoning symptoms:

   Remove person from area.

   Expose to open air.

   Keep person warm.

   Do not permit person to move.

   Administer artificial respiration, if necessary.*

*For artificial respiration, refer to FM 21-11.

SUMMARY WARNINGS

WARNING

- Require all unnecessary personnel to remain clear of hoisting operation to prevent injury from swinging weight.
- Keep tension on lifting sling chains when removing and installing transmission/transfer assembly.
- Make sure lift chain is securely fastened to engine lifting eyes.
- Drycleaning solvent is flammable and will not be used near an open flame. A fire extinguisher will be kept nearby when the solvent is used. Use only in well-ventilated places. Failure to do this may result in injury to personnel and/or damage to equipment.
- Compressed air source will not exceed 30 psi. When cleaning with compressed air, eyeshields must be worn. Failure to wear eyeshields may result in injury to the eyes and loss of sight.
- Fuel vapors are extremely flammable. Do not work near sparks or open flame. Severe injury will result if fuel vapors are ignited.
- Handle crankshaft with care to avoid damage to material and/or injury to personnel.
- Wear eye protection during grinding, cutting, and pressing operations. Failure to do so will result in severe eye injury.
- Do not use caustic soda for steam cleaning due to the danger to personnel.
- Transmission/transfer assembly is very heavy and can cause severe injury to personnel and damage to equipment if dropped. Assistant will help mechanic lift and support assembly.
- Eye protection must be worn to prevent injury to personnel during machining operations.
- Vapors from adhesive are flammable and will not be used near an open flame. A fire extinguisher will be kept nearby when adhesive is used. Use only in well-ventilated places. Failure to do so may result in injury to personnel and/or damage to equipment.
- Do not solder battery cables near flammable or explosive substances. Always wear goggles to prevent eye injury.
- Metal drilling creates flying metal particles. For personnel safety, eye protection will be worn during all drilling operations.
- Do not allow sparks or open flame near fuel control valve while testing or adjusting. Explosion and fire will result.

SUMMARY WARNINGS (Cont'd)

- Do not touch igniter during test. Allow enough time for igniter to return to ambient temperature before removing test equipment or severe injury can result.

- Exhaust fumes can kill. Testing will be performed in a well-ventilated work area, and exhaust fumes must be routed away from test area.

TECHNICAL MANUAL

NO. 9-2320-218-34-1

HEADQUARTERS,
DEPARTMENT OF THE ARMY
WASHINGTON, D.C., 11 August, 1982

DIRECT SUPPORT AND GENERAL SUPPORT MAINTENANCE MANUAL

TRUCK, UTILITY: 1/4-TON, 4X4, M151A2 (2320-00-177-9258); TRUCK, UTILITY: 1/4-TON, 4X4, M825 (2320-00-177-9257) with 106MM RECOILLESS RIFLE; TRUCK, AMBULANCE, FRONTLINE: 1/4-TON, 4X4, M718A1 (2310-00-177-9256).

Current as of 1 January 1982

* This manual supersedes that portion of TM 9-2320-218-34, dated January 1972, with change 3, applicable to M151A2, M825, and M718A1 vehicles.

DIRECT SUPPORT AND GENERAL SUPPORT MAINTENANCE MANUAL

TRUCK 1/4-TON, M151A2, M825, AND M718A1 VEHICLES

REPORTING ERRORS AND RECOMMENDING IMPROVEMENTS

You can help improve this manual. If you find any mistakes or if you know of a better way to improve the procedures, let us know. Mail your letter, DA Form 2028 (Recommended Changes to Publications and Blank Forms), to U.S. Army Tank-Automotive Command, ATTN: DRSTA-MB, Warren, Michigan 48090. A reply will be furnished to you.

HOW TO USE THIS MANUAL

As a maintenance technician, you are responsible for maintaining the equipment covered in this manual. The best way to do this is with the aid of your maintenance manual. A sample of how to use this manual is provided below:

PROBLEM: Organizational maintenance reports low cylinder compression.

1. *How do you start?*
   Turn to the cover of your manual.
   On the right-hand side you will find a listing for "GENERAL MAINTENANCE INSTRUCTIONS" Beside this is a page number and a black marker. Follow either to the first page in the service and troubleshooting chapter. This is on page 2-1.

2. *What is the quickest way to find the solution to the problem?*
   Turn to page 2-2.
   This is the "TROUBLESHOOTING symptom index". Follow the numerical listing under "ENGINE" until you see the malfunction "Low cylinder compression". Now go to the page number listed directly to the right of the malfunction.

3. *What caused the problem?*
   Turn to page 2-4.
   Here you find the most likely causes of the problem. After following each step in the order listed, and after finding the problem for example, the cylinder head is defective, go to the designated paragraph referenced for replacement, repair, or servicing.

4. *How do you fix the problem?*
   Turn to paragraph 3-25.
   This is the cylinder head maintenance procedure. It is arranged step-by-step so everything you need to know to maintain the cylinder head is covered. Now you are ready to correct the problem.

Your maintenance manual is easy to use. It will help you eliminate mistakes and provide the most efficient methods for maintaining equipment. Also, you are made aware of the warnings and cautions you need to know for personnel and equipment safety.

LIST OF TABLES

CHAPTER 1
INTRODUCTION

1-1. Overview

a. This chapter provides standard maintenance forms, records, and reports and physical descriptions of components.

b. This information is divided into the following sections:

Section I. GENERAL INFORMATION

1-2. Scope

a. This technical manual contains direct and general support level instructions for the 1/4-ton, 4x4, M151A2 series vehicles.

b. Models included are:

M151A2, truck, utility (2320-00-177-9258)
M825, truck, utility, w/106 mm recoilless rifle (2320-00-177-9257)
M718A1, truck, ambulance, frontline (2310-00-177-9256)

c. This manual also includes procedures for the installation of special purpose kits to the vehicle.

1-3. Maintenance Forms and Records

Department of the Army forms and procedures used for equipment maintenance will be those prescribed by TM 38-750, The Army Maintenance Management System.

1-4. Destruction of Army Equipment to Prevent Enemy Use

Procedures for destruction of Army equipment to prevent enemy use are found in TM 750-244-6.

1-5. Reporting Equipment Improvement Recommendations (EIR's)

"EIR's" can and must be submitted by anyone who is aware of an unsatisfactory condition with the equipment design or use. It is not necessary to show a new design or list a better way to perform a procedure, just simply tell why the design is unfavorable or why a procedure is difficult. EIR's may be submitted on SF 368 (Quality Deficiency Report). Mail directly to: Commander, U.S. Army Tank-Automotive Command, ATTN: DRSTA-M, Warren, Michigan 48090. A reply will be furnished directly to you.

Section II. DESCRIPTION AND DATA

1-6. Description

Description for the assemblies and components covered in this manual are located in their respective chapters. Illustrations and purpose of the various 4x4, 1/4-ton models follow. Refer to TM 9-2320-218-20-1 for additional description of M151A2, M825, and M718A1 vehicles.

UTILITY TRUCK: M151A2

Purpose: This vehicle is a general purpose personnel and/or cargo carrier. It provides space for four men, including the driver, with equipment.

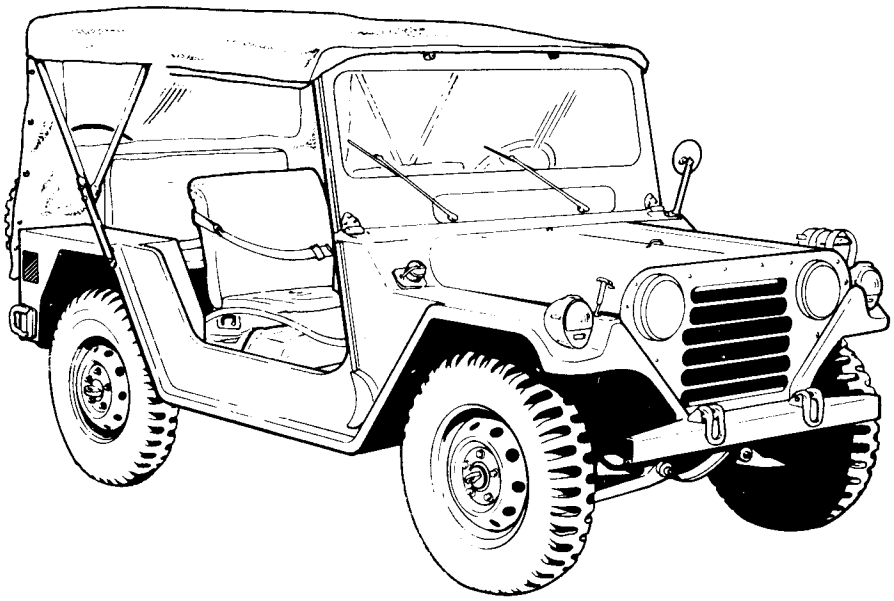

TA 156048

1-6. Description (Cont'd)

UTILITY TRUCK: M825

Purpose. Equipped with a 106 mm recoilless rifle on a M79 rifle mount, provisions are made for carrying six rounds of ammunition and weapon tools. This arrangement creates a mobile weapon system.

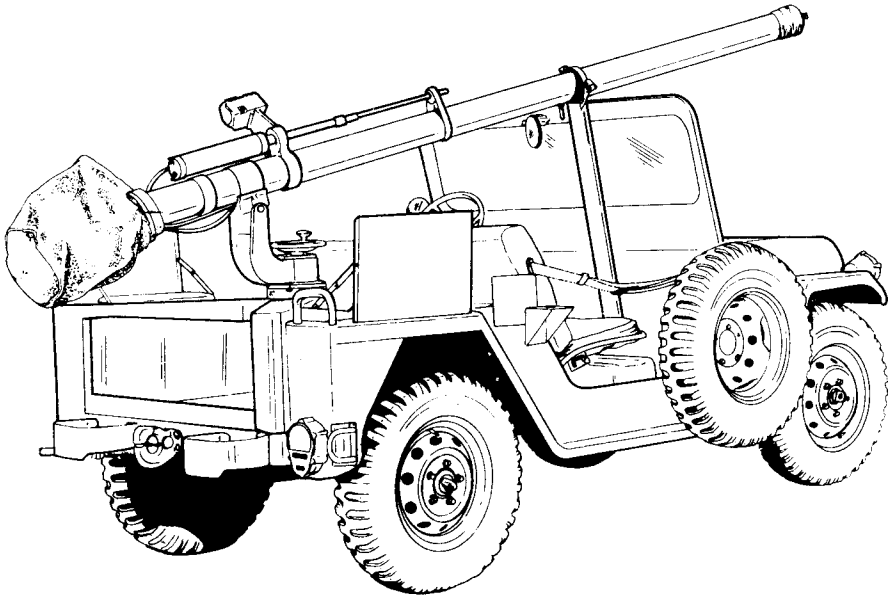

AMBULANCE TRUCK, FRONTLINE: M718A1

Purpose: Designed to carry ambulatory and litter patients, the cargo area of these vehicles is longer and higher. Thus, litters and patients can be accommodated.

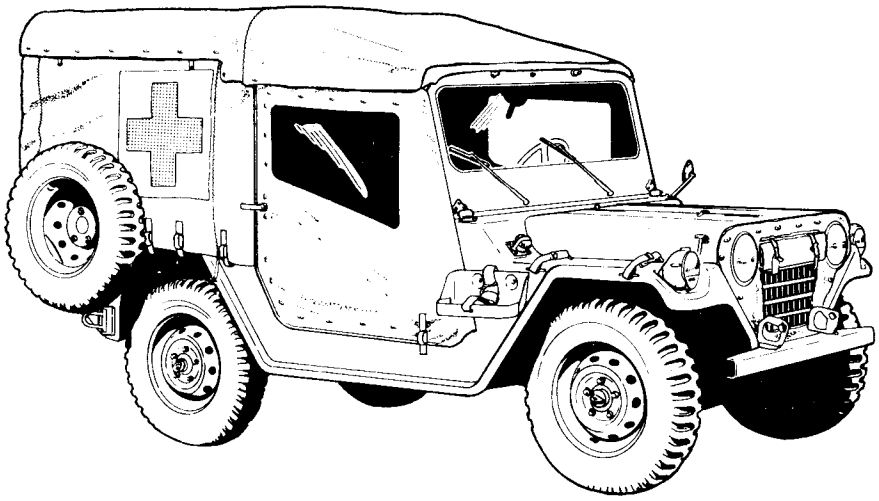

TA 156049

1-7. Tabulated Data

Tabulated data for the M151A2, M825, and M718A1 vehicles can be found in the applicable areas of this technical manual. Information not covered in this manual can be found in TM 9-2320-218-20-1 and LO 9-2320-218-12.

Table 1-1. Abbreviations

NOTE

Standard and metric measurements will be used in this table. A list of their abbreviations is provided below.

MEASUREMENT	ABBREVIATION	MEASUREMENT	ABBREVIATION
Pints	pt	Fahrenheit	F
Quarts	qt	Celsius	C
Gallons	gal	Liters	l
Inches	in	Centimeters	cm
Pounds	lb	Newton Meter	N•m
Miles Per Hour	mph	Kilometers Per Hour	km/h
Miles Per Gallon	mpg	Kilopascals	kPa
Per Square Inch	psi	Maximum	max
Revolutions Per Minute	rpm	Minimum	min
Horsepower	hp	Foot Pounds	lb-ft
Kilograms	kg	Inch Pounds	lb-in
Cubic Feet Per Minute	cfm	Cubic Centimeters Per Second	cu cms/sec

1-8. Differences Between Models

a. The M151A2, M825, and M718A1 are updated versions of the M151A1, M151A1C, and M718 ambulance, and have a stronger suspension than earlier models.

b. M151A2, M718A1, and M825 series vehicles are emission control equipped, which includes non-vented fuel tank, charcoal-activated canister, new carburetor, and interconnecting lines. These vehicles are identified by a certification label located on the vehicle rocker arm cover.

CHAPTER 2

GENERAL MAINTENANCE INSTRUCTIONS

2-1. Overview

a. This chapter provides information on common and special tools, troubleshooting, cleaning, inspection and repair, and assembly procedures.

b. This information is divided into the following sections:

Section I. REPAIR PARTS, SPECIAL TOOLS, TMDE, AND SUPPORT EQUIPMENT

2-2. General

Tools, equipment, and maintenance parts available to the using organization are supplied to maintenance units for maintaining, repairing, and/or rebuilding the vehicle and components.

2-3. Common Tools and Equipment

Refer to modified table or organization and equipment (MTOE) for authorized common tools and equipment applicable to your unit.

2-4. Special Tools and Support Equipment

Special tools and support equipment are listed and illustrated in TM 9-2320-218-34P manual.

2-5. Tests, Measurements, and Diagnostic Equipment (TMDE)

Calibrate all measuring and test equipment to determine equipment conformance with MIL-STD-120, MIL-C-4SGG2 and MIL-L-45607.

2-6. Fabricated Tools

Fabricated tools useful in maintaining the equipment supported by this manual apply only to direct and general support personnel. The tools found in appendix D are not available for issue and must be fabricated by qualified personnel.

2-7. Repair Parts

Repair parts required for the maintenance of referenced equipment are listed and illustrated in the TM 9-2320-218-34P manual.

Section II. TROUBLESHOOTING

2-8. General

a. This section contains troubleshooting information and tests for locating and correcting malfunctions which may develop on the vehicles covered in this manual that are beyond the scope of organizational maintenance. Each symptom or malfunction given for an individual component or system is followed by step(s) you should take to determine the cause and the corrective action you must take to remedy the problem.

b. Before taking any action to correct a possible malfunction, the following rules should be followed:

(1) Careful inspection and troubleshooting can prevent vehicle damage and personnel injury.

(2) Use all senses to observe and locate troubles.

(3) Use test instruments or gages to help you determine and isolate problems.

(4) Always isolate the system where the malfunction occurs, and then locate the defective component.

(5) Use standard automotive theories and principles when troubleshooting vehicles in this manual.

c. Table 2-1 lists possible malfunctions that may occur in individual components or systems of the vehicle.

d. Table 2-2 details specific instructions to be followed in correcting malfunctions that may occur in individual components.

Table 2-1. Troubleshooting Symptom Index

Table 2-1. Troubleshooting Symptom Index (Cont'd)

MALFUNCTION NO.	MALFUNCTION	TROUBLESHOOTING PROCEDURE PAGE
	WINTERIZATION KIT -65°F (-54°C)	
14.	Heater fails to start when control switch is turned on	2-7
15.	Heater overheats and stops burning	2-8
16.	Heater overheats but continues to burn	2-8
17.	Heat output too low	2-8
18.	Heater smokes excessively or "bangs" upon starting	2-8
19.	Blower will not shut off when heater is turned off	2-9
20.	Odor of fuel in ventilating air stream	2-9
21.	Blower runs but heater fails to ignite at low ambient temperature	2-9
22.	Heat exchanger becomes loaded with soot and carbon	2-10

Table 2-1. Troubleshooting Symptom Index (Cont'd)

MALFUNCTION NO.	MALFUNCTION	TROUBLESHOOTING PROCEDURE PAGE
	WINTERIZATION KIT -65°F (-54°C)	
14.	Heater fails to start when control switch is turned on	2-7
15.	Heater overheats and stops burning	2-8
16.	Heater overheats but continues to burn	2-8
17.	Heat output too low	2-8
18.	Heater smokes excessively or "bangs" upon starting	2-8
19.	Blower will not shut off when heater is turned off	2-9
20.	Odor of fuel in ventilating air stream	2-9
21.	Blower runs but heater fails to ignite at low ambient temperature	2-9
22.	Heat exchanger becomes loaded with soot and carbon	2-10

Table 2-2. Troubleshooting

MALFUNCTION TEST OR INSPECTION CORRECTIVE ACTION

ENGINE

1. ENGINE WILL NOT CRANK

Remove spark plugs and check for hydrostatic lock (liquid in cylinders).

If no liquid is in cylinders, and crankshaft will not rotate, disassemble, clean, inspect, and repair or replace engine components as necessary (chapter 3).

END OF TESTING!

2. LOW CYLINDER COMPRESSION

Step 1. Remove rocker arm cover (para 3-14) and check for stuck or sticking valves.

a. If valves are stuck or sticking, attempt to free them by slowly pouring 1/2 cup of penetrating valve oil in carburetor air intake a little at a time while engine is running.

b. If valves are still stuck or sticking, remove, repair, or replace cylinder head components (chapter 3).

Step 2. Disassemble engine as necessary (para 3-15) and look for the following probable malfunctions:

- Defective valve(s) (para 3-25)
- Damaged cylinder head gasket (para 3-15)
- Defective cylinder head (para 3-25)
- Damaged piston rings (para 3-15)
- Defective pistons (para 3-28)
- Damaged cylinder bores (para 3-27)

Clean, inspect, and repair or replace engine components as necessary (chapter 3).

END OF TESTING!

3. UNUSUAL INTERNAL ENGINE NOISE

Step 1. Remove rocker arm cover (para 3-14) and/or disassemble engine as necessary (para 3-15) and check for the following probable malfunctions:

- Lack of lubrication to rocker arms
- Defective rocker arm(s) or push rod(s) (para 3-26)
- Defective valve(s) (para 3-25)
- Defective valve tappet(s) (para 3-26)

Disassemble, clean, inspect, and repair or replace engine components as necessary (chapter 3).

Step 2. Check for defective water pump (para 3-35).

If water pump is defective, replace (paras 3-14 and 3-17).

Step 3. Disassemble engine components as necessary (para 3-15) and check for the following probable malfunctions:

Table 2-2. Troubleshooting(Cont'd)

MALFUNCTION TEST OR INSPECTION CORRECTIVE ACTION

- Defective flywheel (para 3-31)
- Defective timing gears (paras 3-29 and 3-30)
- Defective camshaft or camshaft bearings (paras 3-29 or 3-27)
- Defective oil pump (para 3-32)
- Defective piston(s), piston pin(s), connecting rod(s), or connecting rod bearing(s) (para 3-28)
- Defective crankshaft or main bearings (para 3-30)

Clean, inspect, and repair or replace engine components as necessary (chapter 3).

END OF TESTING!

4. POOR ACCELERATION AND/OR LACK OF POWER (misfires)

Disassemble engine as necessary (para 3-15) and check for the following probable malfunctions:

- Defective valve(s) (para 3-25)
- Damaged cylinder head gasket (para 3-15)
- Defective cylinder head (para 3-25)
- Defective piston rings (para 3-15)
- Defective pistons(s) (para 3-28)
- Defective camshaft or camshaft bearings (paras 3-29 or 3-27)
- Defective timing gears (paras 3-29 and 3-30)
- Defective rocker arm(s) or push rod(s) (para 3-26)
- Defective valve tappet(s) (para 3-26)

Clean, inspect, and repair or replace engine components as necessary (chapter 3).

END OF TESTING!

5. ENGINE EMITS BLUE GRAY SMOKE (oil)

Disassemble engine as necessary (para 3-15) and check for the following probable malfunctions:

- Defective oil pressure relief valve (para 3-32)
- Damaged cylinder head gasket (para 3-15)
- Defective cylinder head (para 3-25)
- Damaged piston rings (para 3-15)
- Defective piston(s) (para 3-28)
- Defective valve guides (para 3-25)
- Defective valve(s) (para 3-25)

Clean, inspect, and repair or replace engine components as necessary (chapter 3).

END OF TESTING!

6. LOW OR HIGH OIL PRESSURE

Disassemble engine as necessary (para 3-15) and check for the following probable malfunctions:

- Defective oil strainer assembly pickup tube (para 3-32)

Table 2-2. Troubleshooting (Cont'd)

MALFUNCTION TEST OR INSPECTION CORRECTIVE ACTION

- Defective oil pressure relief valve (para 3-32)
- Defective oil pump (para 3-32)
- Clogged engine oil passages
- Defective bearings

Clean, inspect, and repair or replace engine components as necessary (chapter 3).

END OF TESTING!

7. EXCESSIVE OIL CONSUMPTION

Disassemble engine as necessary (para 3-15) and check for the following probable malfunctions:

- Defective cylinder head return oil drain (para 3-26)
- Defective valve(s) (para 3-25)
- Defective valve guides (para 3-25)
- Defective piston rings (para 3-15)
- Defective piston(s) (para 3-28)
- Damaged cylinder walls or bores (para 3-27)
- Defective rear seal (para 3-15)

Clean, inspect, and repair or replace engine components as necessary (chapter 3).

END OF TESTING!

TRANSMISSION AND TRANSFER

8. UNUSUAL INTERNAL TRANSMISSION AND/OR TRANSFER NOISE

Disassemble as necessary and check for defective components (chapter 7).

Clean, inspect, and repair or replace components as necessary (chapter 7).

END OF TESTING!

9. NO SHIFT LEVER RESPONSE OR HARD SHIFTING

Disassemble as necessary and check for defective components (chapter 7).

Clean, inspect, and repair or replace components as necessary (chapter 7).

END OF TESTING!

10. TRANSFER WILL NOT SHIFT OUT OF FRONT AXLE DRIVE (shift lever locked)

Disassemble as necessary and check for defective components (chapter 7).

Clean, inspect, and repair or replace components as necessary (chapter 7).

END OF TESTING!

Table 2-2. Troubleshooting (Cont'd)

MALFUNCTION TEST OR INSPECTION CORRECTIVE ACTION

11. FRONT AXLE WILL NOT DISENGAGE WHEN TRANSFER SHIFT LEVER IS IN DISENGAGED POSITION

Disassemble as necessary and check for defective components (chapter 7).

Clean, inspect, and repair or replace components as necessary (chapter 7).

END OF TESTING!

12. TRANSMISSION SLIPS OUT OF GEAR

Disassemble as necessary and check for defective components (chapter 7).

Clean, inspect, and repair or replace components as necessary (chapter 7).

END OF TESTING!

13. TRANSFER SLIPS OUT OF FRONT DRIVE

Disassemble as necessary and check for defective components (chapter 7).

Clean, inspect, and repair or replace components as necessary (chapter 7).

END OF TESTING!

WINTERIZATION KIT -65°F (-54°C)

14. HEATER FAILS TO START WHEN CONTROL SWITCH IS TURNED ON

Step 1. Check for low heater fuel pressure.

If low, clear or replace restricted fuel lines and tighten loose connections.

Step 2. Check for defective fuel pump (para 16-17).

If fuel pump is defective, replace (TM 9-2320-218-20-1-2).

Step 3. Check for defective fuel control valve (para 16-12).

If fuel control valve is defective, replace (paras 16-13 and 16-15).

Step 4. Check for burned out igniter (para 16-14).

If ignitor is burned out, replace (paras 16-13 and 16-15).

Step 5. Check for defective ignition control.

If ignition control is defective, replace (paras 16-13 and 16-15).

Step 6. Check for open circuit in overheat switch (para 16-14).

If circuit is open, replace (paras 16-13 and 16-15).

Table 2-2. Troubleshooting (Cont'd)

MALFUNCTION TEST OR INSPECTION CORRECTIVE ACTION

Step 7. Check for defective flame detector switch (para 16-16).

If flame detector switch is defective, replace (paras 16-13 and 16-15).

Step 8. Check condition of vaporizer and wick.

If vaporizer or wick has deteriorated, replace burner assembly (paras 16-13 and 16-15).

END OF TESTING!

15. HEATER OVERHEATS AND STOPS BURNING

Step 1. Check for restriction in vent air flow.

If air flow is restricted, remove restriction.

Step 2. Check for defective fuel control valve (para 16-14).

If fuel control valve is defective, replace (paras 16-13 and 16-15).

END OF TESTING!

16. HEATER OVERHEATS BUT CONTINUES TO BURN

Replace overheat switch (paras 16-13 and 16-15) and check for cause of overheating (see malfunction 15).

END OF TESTING!

17. HEAT OUTPUT TOO LOW

Step 1. Check for low heater fuel pressure.

If low, clear or replace restricted fuel lines and tighten loose connections.

Step 2. Check for defective fuel pump (para 16-16).

If fuel pump is defective, replace (TM 9-2320-218-20-1-2).

Step 3. Check for defective fuel control valve (para 16-12).

If fuel control valve is defective, replace (paras 16-13 and 16-15).

END OF TESTING!

18. HEATER SMOKES EXCESSIVELY OR "BANGS" UPON STARTING

Step 1. Check position of control box HI-LO switch for starting.

If switch is in HI position, move to LO when starting.

Table 2-2. Troubleshooting (Cont'd)

MALFUNCTION TEST OR INSPECTION CORRECTIVE ACTION

Step 2. Check for leaking fuel control valve.

If fuel control valve is leaking, replace (paras 16-13 and 16-15).

Step 3. Check for defective control box.

If control box is defective, replace (TM 9-2320-218-20-1-2).

END OF TESTING!

19. BLOWER WILL NOT SHUT OFF WHEN HEATER IS TURNED OFF

Step 1. Check for defective flame detector switch (para 16-16).

If flame detector switch is defective, replace (paras 16-13 and 16-15).

Step 2. Check for broken quartz rod (para 16-16).

If quartz rod is broken, replace (para 16-16).

END OF TESTING!

20. ODOR OF FUEL IN VENTILATING AIR STREAM

Check for leaking fuel connection at burner fuel tube and fuel control valve.

If fuel connection is leaking, tighten.

END OF TESTING!

21. BLOWER RUNS BUT HEATER FAILS TO IGNITE AT LOW AMBIENT TEMPERATURE

Step 1. Check for defective igniter (para 16-14).

If igniter is defective, replace (paras 16-13 and 16-15).

Step 2. Check for defective ignition control.

If ignition control is defective, replace (paras 16-13 and 16-15).

Step 3. Check for restriction and dirt in fuel lines.

If fuel lines are restricted, clean or replace (TM 9-2320-218-20-1-2).

Step 4. Check for defective fuel control valve (para 16-14).

If fuel control valve is defective, replace (paras 16-13 and 16-15).

Step 5. Check for defective heater fuel pump (para 16-16).

If heater fuel pump is defective, replace (TM 9-2320-218-20-1-2).

Table 2-2. Troubleshooting (Cont'd)

MALFUNCTION TEST OR INSPECTION CORRECTIVE ACTION

22. HEAT EXCHANGER BECOMES LOADED WITH SOOT AND CARBON

Step 1. Check for slow running motor.

a. If motor is running slowly, check electrical connections.

b. If motor is still running slowly,, replace (paras 16-13 and 16-15).

Step 2. Check fuel consumption rate (para 16-18).

If high fuel rate, adjust fuel control valve (para 16-12).

Step 3. Check for exhaust restriction.

If exhaust is restricted, remove restriction.

Step 4. Check for low voltage.

If voltage is low, correct at source.

Step 5. Check for too heavy grade of fuel for outside temperatures.

a. Change to proper grade of fuel.

b. Clean by operating heater on gasoline for a short time.

END OF TESTING!

Section III. ENGINE AND TRANSMISSION/TRANSFER REMOVAL AND INSTALLATION

2-9. General

a. This section provides removal and installation procedures for the power plant assembly. The power plant must be removed when engine or transmission/transfer is being replaced.

b. Engine replacement must be recorded in DA Form 2408-1 in accordance with TM 38-750.

2-10. Removal and Installation of Engine and Transmission/Transfer Maintenance Task Summary

2-11. Power Plant Replacement

This task covers:

a. Removal *b. Installation*

INITIAL SETUP:

Applicable Models
All

Test Equipment
None

Special Tools
Chain fall
Engine sling

Materials/Parts
Gearshift lever gasket
Sealant (NSN 8030-00-833-9563)
Manifold outlet gasket
Muffler inlet pipe gasket
Three cotter pins
Twenty-one lockwashers
Four locknuts

Personnel Required
One mechanic
Two assistants

Manual References
TM 9-2320-218-20-1
TM 9-2320-218-34P
LO 9-2320-218-12

Equipment Condition Reference	Condition Description
TM 9-2320-218-20-1-2	Hood removed.
TM 9-2320-218-20-1-1	Negative battery ground cable disconnected.
TM 9-2320-218-20-1-2	Transmission cover panel removed.

Special Environmental Conditions
None

General Safety Instructions
All personnel must remain clear of hoisting operation.

STEP NO.	LOCATION	ITEM	ACTION	REMARKS

NOTE

- If engine is to be replaced or repaired, drain coolant from radiator, and coolant and oil from engine (TM 9-2320-218-20-1-1).
- If transmission/transfer assembly is to be replaced or repaired, drain lubricant (LO 9-2320-218-12).

a. REMOVAL

1.	Transmission shift lever boot (1) to gearshift housing (8)	Clamp (2)	Loosen and remove.	

2-11. Power Plant Replacement (Cont'd)

STEP NO.	LOCATION	ITEM	ACTION	REMARKS
2.		Boot (1)	Remove from shift lever (7).	
3.		Gearshift lever cap (3)	Unscrew from gearshift housing (8) and remove.	
4.		Gearshift lever (7), seat (4), spring (5), and gasket (6)	Remove.	Discard gasket (6). Cover gearshift lever opening to prevent dirt from entering transmission.
5.	Top of transfer case (9)	Speedometer shaft assembly (12)	Loosen shaft nut (11) and disconnect from driven gear bearing and seal assembly (10).	
6.	Circuit 6 starter cable (13) to starter (16)	Nut (14) and lockwasher (15)	Remove.	Discard lockwasher (15).
7.		Circuit 6 starter cable (13)	Remove from starter (16).	

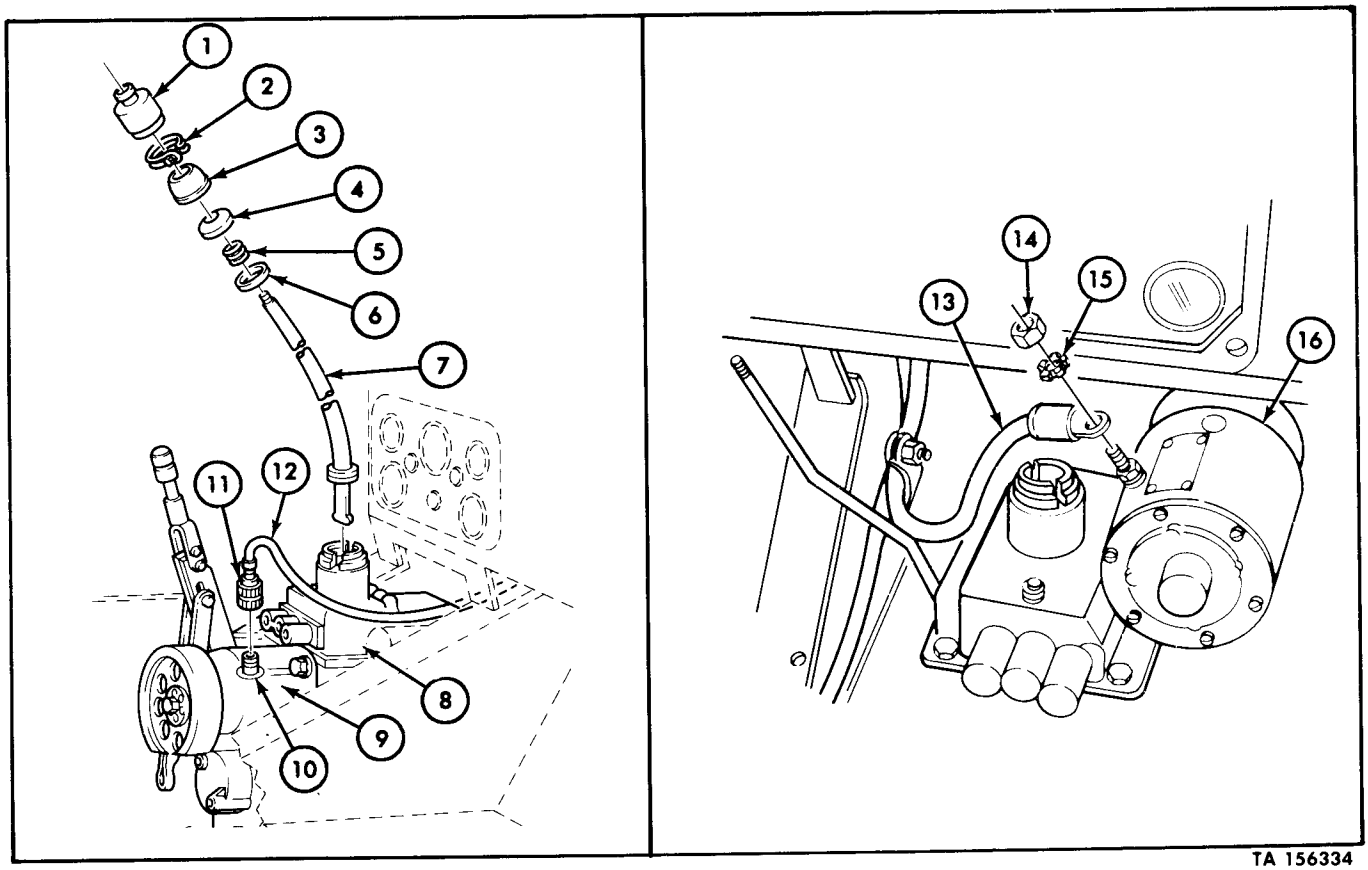

TA 156334

2-11. Power Plant Replacement (Cont'd)

STEP NO.	LOCATION	ITEM	ACTION	REMARKS
8.	Parking brake linkage (4) to parking brake handle assembly (1) and lever plates (5)	Two cotter pins (3) and clevis pins (2)	Remove.	Discard two cotter pins (3).
9.		Parking brake linkage (4)	Remove from parking brake handle assembly (1) and lever plates (5).	
10.	Parking brake handle assembly (1) to transfer (8)	Two capscrews (6) and lockwashers (7)	Remove and detach handle (1) from transfer (8).	Discard lockwashers (7).

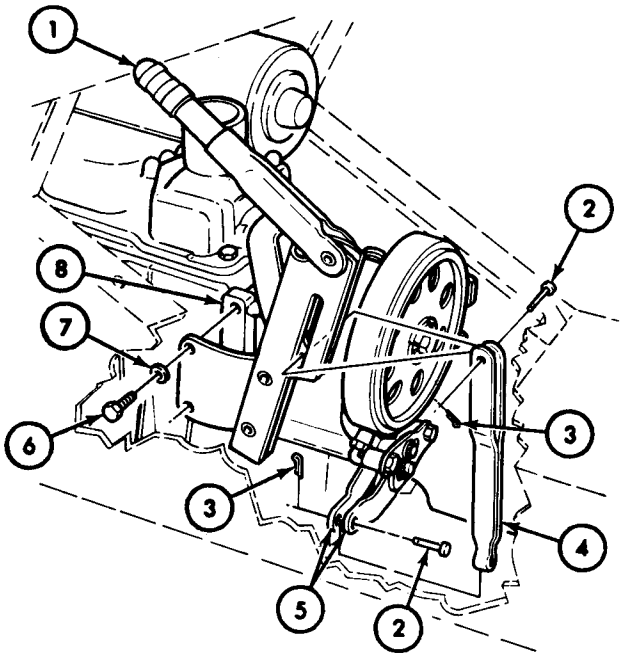

11.	Transfer shift lever (9) to transmission (10)	Cotter pin (11), flat washer (12), and spring washer (13)	Remove.	Discard cotter pin (11).
12.		Transfer shift lever (9)	Remove from transmission (10).	

TA 156335

2-11. Power Plant Replacement (Cont'd)

STEP NO.	LOCATION	ITEM	ACTION	REMARKS

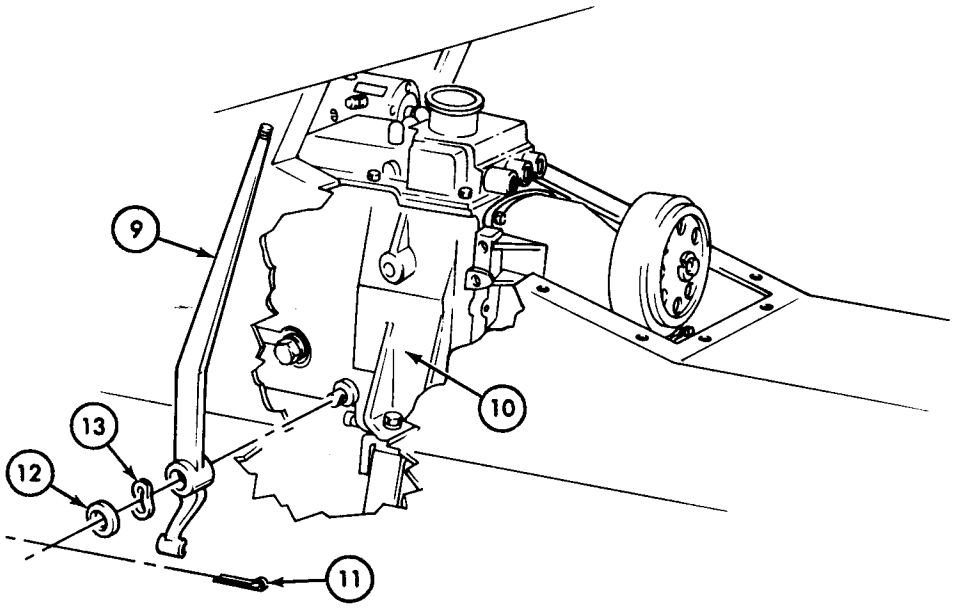

13.	Two transmission mounting brackets (10) to upper (16) and lower (17) rear engine mounts	Two capscrews (14) and lockwashers (15)	Remove.	Discard lockwashers (15).

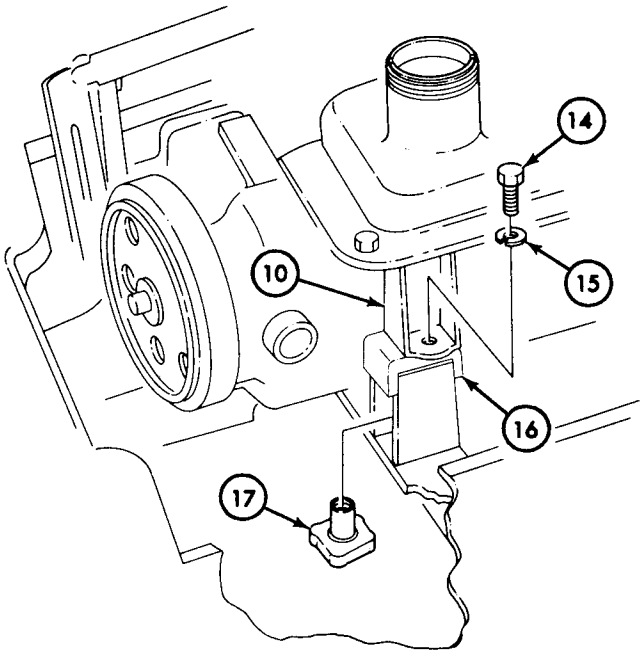

TA 156336

2-11. Power Plant Replacement (Cont'd)

STEP NO.	LOCATION	ITEM	ACTION	REMARKS
14.	Clutch lever (2) to clutch pedal shaft (1)	Bolt-assembled lock-washer (4) and flat washer (3)	Remove and detach clutch lever (2) from clutch pedal shaft (1).	
15.	Clutch release rod (6) to clutch equalizer shaft arm (7)	Clutch return spring (5)	Remove.	
16.		Clutch release rod (6)	Remove from equalizer shaft arm (7).	
17.	Clutch equalizer shaft bracket (13) to vehicle underbody (14)	Two locknuts (15) and bolts (12)	Remove.	Discard locknuts (15).
18.		Equalizer shaft (10)	*a.* Remove from engine by pulling directly away. *b.* Tilt engine end (11) down and rearward to remove arm (9) from clutch cross shaft rod (8).	

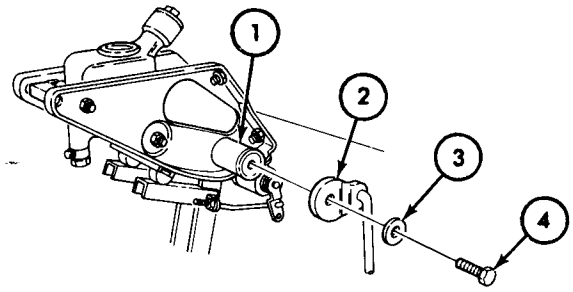

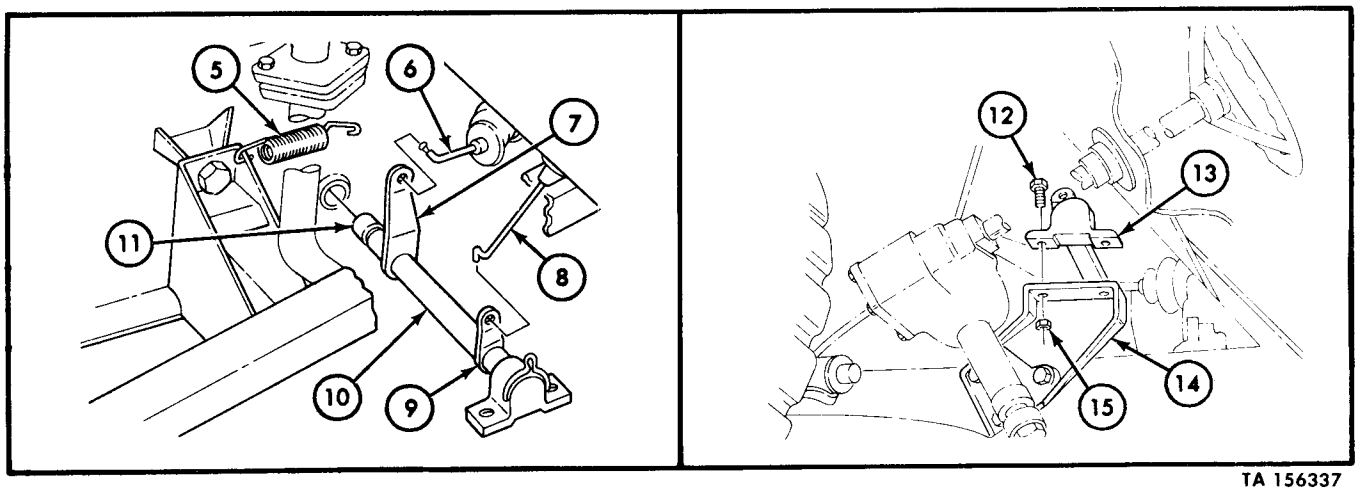

TA 156337

2-11. Power Plant Replacement (Cont'd)

STEP NO.	LOCATION	ITEM	ACTION	REMARKS
19.	Muffler inlet pipe (20) to exhaust manifold (16)	Two nuts (19) and lockwashers (18)	Remove.	Discard lockwashers (18).
20.		Muffler inlet pipe (20) and gasket (17)	Remove from exhaust manifold (16).	Discard gasket (17).

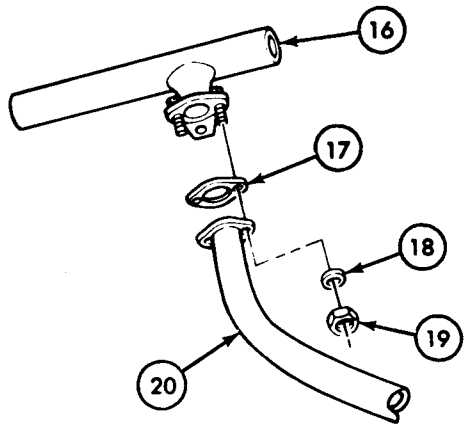

21.	Air intake hose (26) to carburetor (23)	Clamp (24)	Loosen screw (25) and disconnect intake hose (26) from carburetor (23).	
22.	Fuel return hose (21) to carburetor (23)	Fitting (22)	Unscrew and disconnect return hose (21) from carburetor (23).	

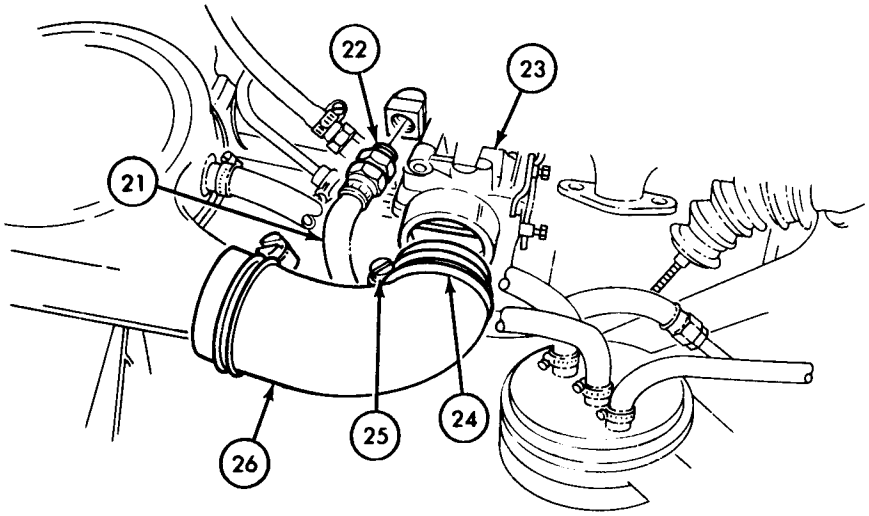

TA 156338

2-11. Power Plant Replacement (Cont'd)

STEP NO.	LOCATION	ITEM	ACTION	REMARKS
		NOTE		
		Steps 23 and 24 apply only to vehicles with fuel vapor storage canister.		
23.	Canister air supply hose (5) and vapor purge hose (4) to air cleaner (1)	Two clamps (2)	Loosen screws (3).	
24.		Air supply hose (5) and vapor purge hose (4)	Remove from air cleaner (1).	
25.	Fuel pump ventilation hose (8) to air cleaner (1)	Clamp (7)	Loosen screw (6).	
26.		Fuel pump ventilation hose (8)	Remove from air cleaner (1).	
27.		Fuel tank ventilation tube (9)	Disconnect from air cleaner (1).	
28.	Air cleaner (1) to support brackets (10)	Four bolt-assembled lockwashers (11)	Remove.	
29.		Air cleaner (1)	Remove from support brackets (10).	

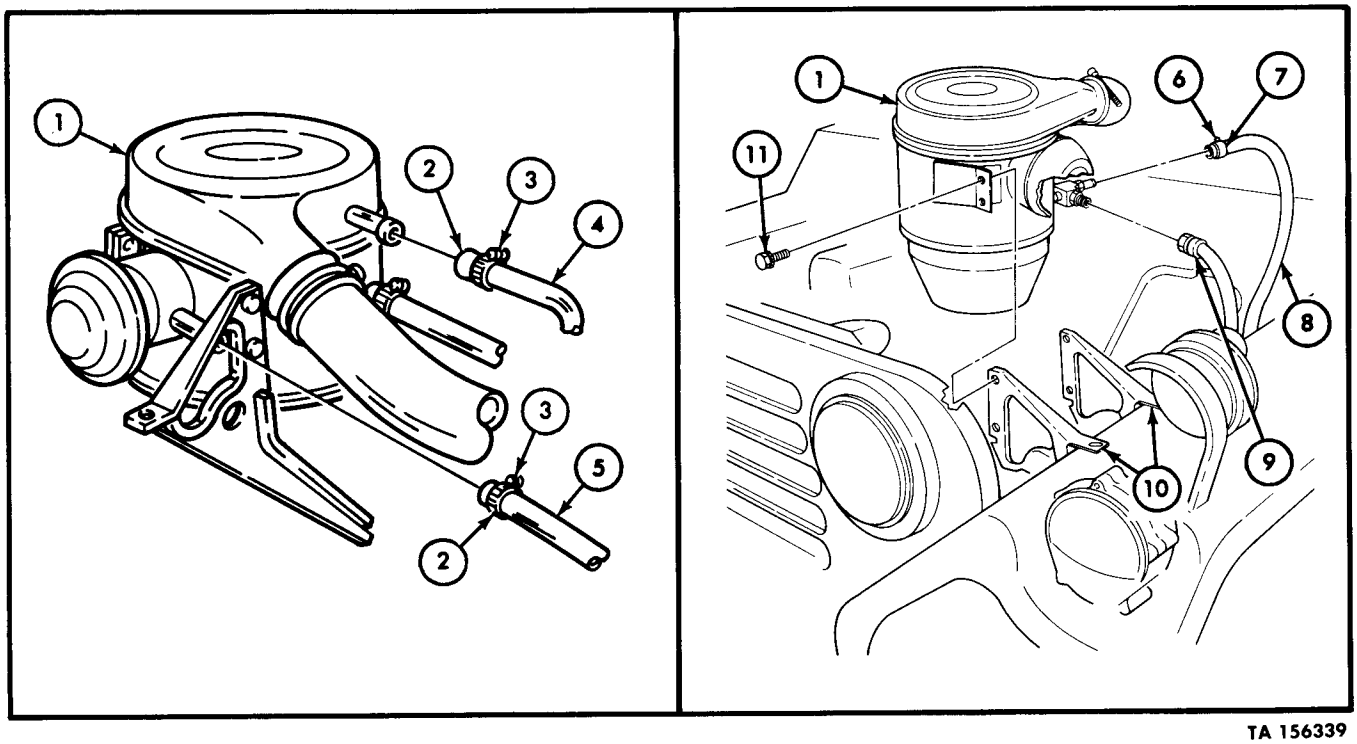

TA 156339

2-11. Power Plant Replacement (Cont'd)

STEP NO.	LOCATION	ITEM	ACTION	REMARKS
30.	Choke cable (14) to carburetor (12)	Two cable clamps (13)	Loosen.	
31.		Choke cable (14)	Slide out of cable clamps (13).	
32.	Accelerator rod (16) to bellcrank (15)	Trunnion clip (17)	Remove and separate accelerator rod (16) from bellcrank (15).	

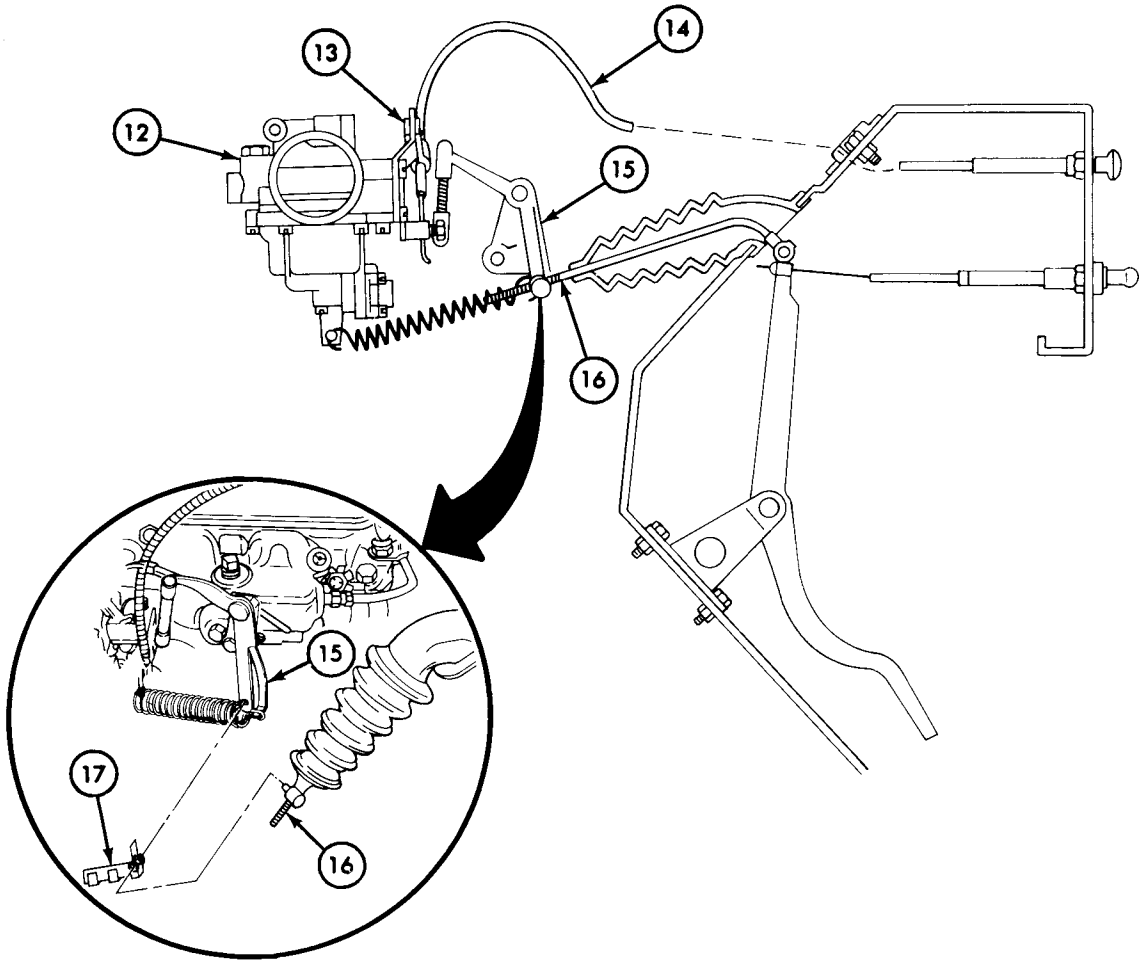

TA 156340

2-11. Power Plant Replacement (Cont'd)

STEP NO.	LOCATION	ITEM	ACTION	REMARKS
33.	Terminal cover (2) to alternator (1)	Two screws (3)	Remove.	
34.		Terminal cover (2)	Pry loose from sealant and remove from alternator (1).	
35.	Wire retaining strap (4) to alternator (1)	Two screws (5)	Remove.	
36.		Wire retaining strap (4)	Remove from alternator (1).	

NOTE

Remove sealant before removing circuit 5 wire (8).

37.	Circuit 5 wire (8) to alternator terminal (15)	Nut (6) and lockwasher (7)	Remove.	Discard lockwasher (7).
38.		Circuit 5 wire (8)	Remove from alternator (1).	
39.	Circuit 568 wire (9) to alternator (1)	Connector (10)	Disconnect.	
40.	Circuit 3 wire (13) to alternator terminal (14)	Bolt (11) and lock-washer (12)	Remove.	Discard lockwasher (12).
41.		Circuit 3 wire (13)	Remove from alternator (1).	

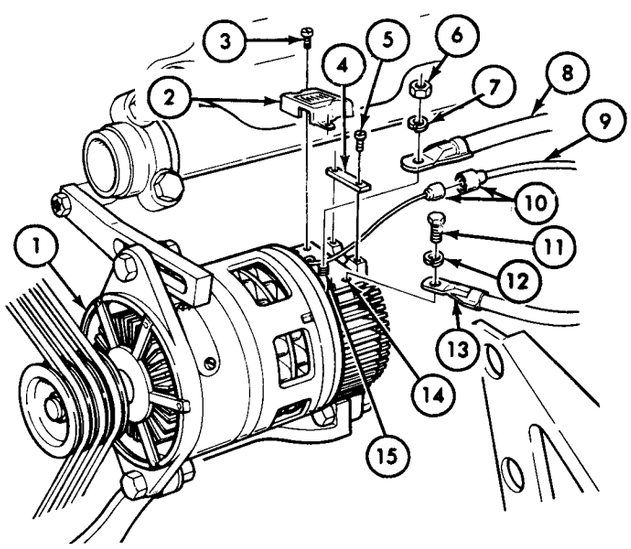

TA 156341

2-11. Power Plant Replacement (Cont'd)

STEP NO.	LOCATION	ITEM	ACTION	REMARKS
33.	Terminal cover (2) to alternator (1)	Two screws (3)	Remove.	
34.		Terminal cover (2)	Pry loose from sealant and remove from alternator (1).	
35.	Wire retaining strap (4) to alternator (1)	Two screws (5)	Remove.	
36.		Wire retaining strap (4)	Remove from alternator (1).	
		NOTE		
		Remove sealant before removing circuit 5 wire (8).		
37.	Circuit 5 wire (8) to alternator terminal (15)	Nut (6) and lockwasher (7)	Remove.	Discard lockwasher (7).
38.		Circuit 5 wire (8)	Remove from alternator (1).	
39.	Circuit 568 wire (9) to alternator (1)	Connector (10)	Disconnect.	
40.	Circuit 3 wire (13) to alternator terminal (14)	Bolt (11) and lockwasher (12)	Remove.	Discard lockwasher (12).
41.		Circuit 3 wire (13)	Remove from alternator (1).	

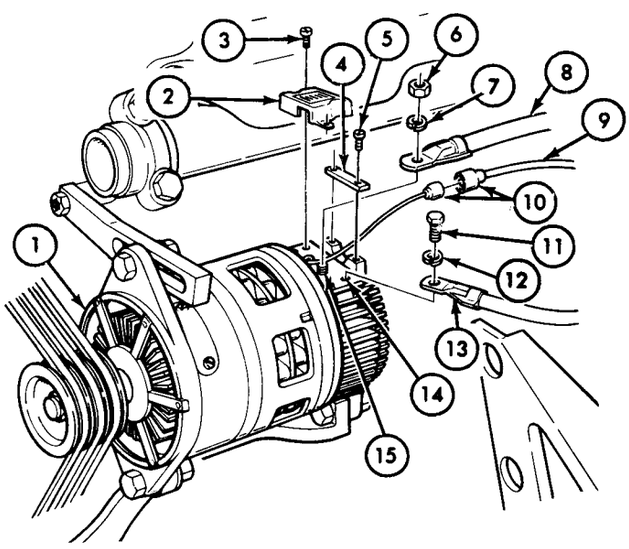

TA 156341

2-11. Power Plant Replacement (Cont'd)

STEP NO.	LOCATION	ITEM	ACTION	REMARKS
42.	Left and right headlights (17)	Circuits 17 (16), 18 (18), and 91 (19) connectors	Disconnect from each.	Tag location of connections for reassembly.

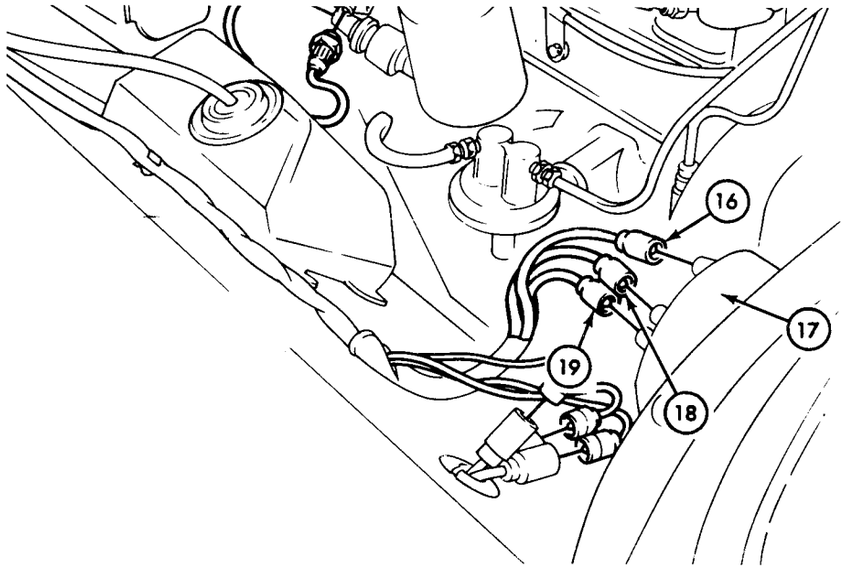

43.	Brush guard (20) to front fenders (21) and (24)	Six bolt-assembled lockwashers (23) and flat washers (22)	Remove.
44.		Brush guard (20)	Remove from fenders (21) and (24).

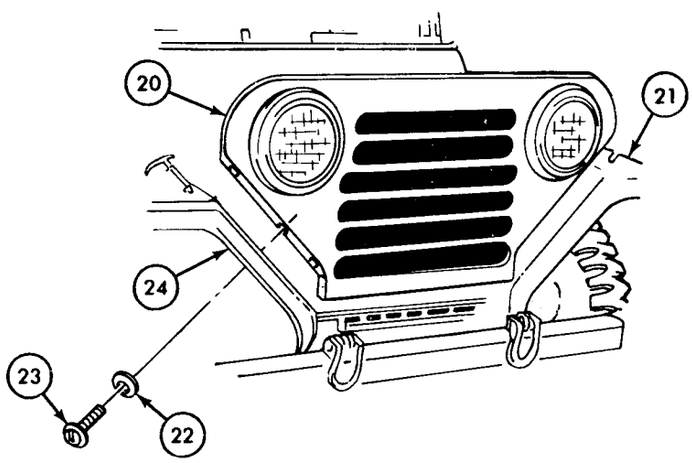

TA 156342

2-11. Power Plant Replacement (Cont'd)

STEP NO.	LOCATION	ITEM	ACTION	REMARKS
		NOTE		
		Steps 45, 46, and 47 apply only to vehicles equipped with hot water heater kit.		
45.	Right front corner of engine (2)	Two shutoff draincocks (1)	Close by turning handles clockwise.	
46.	Heater hoses (5) to shutoff draincocks (1)	Two clamps (4)	Loosen screws (3).	Note position of hoses (5) for installation.
47.		Two hoses (5)	Remove from shutoff draincocks (1).	Use container to catch coolant.

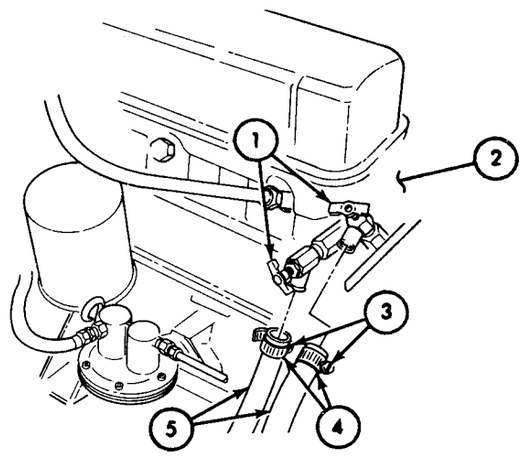

48.	Fuel pump (7)	Fuel inlet hose (6)	Disconnect.	

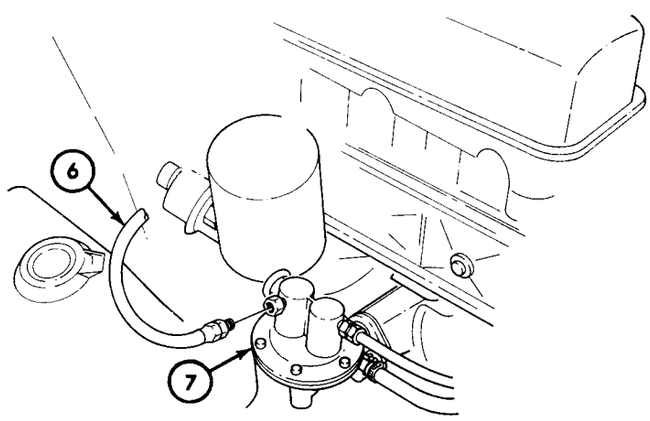

TA 156343

2-11. Power Plant Replacement (Cont'd)

STEP NO.	LOCATION	ITEM	ACTION	REMARKS
49.	Distributor receptacle (10)	Primary cable connector (12)	Disconnect.	
50.	Oil pressure transmitter (11)	Circuit 36 connector (13)	Disconnect.	
51.	Temperature sending unit (9)	Circuit 33 connector (8)	Disconnect.	

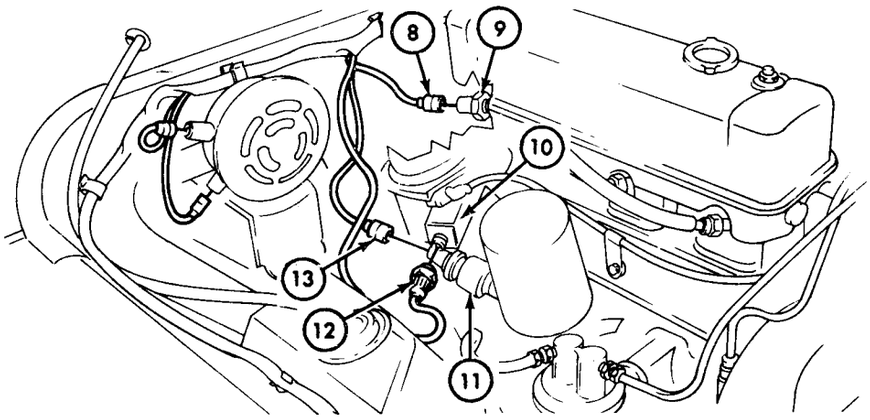

52.	Horn mounting bracket (19) to firewall (14)	Capscrew (15), lockwasher (16), lockwasher (18), and engine ground cable (17)	Remove.	
53.		Horn mounting bracket (19)	Secure lockwasher (18), lockwasher (16), and capscrew (15).	

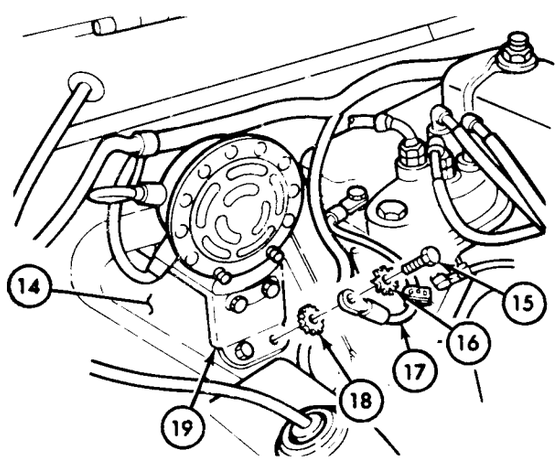

TA 156344

2-11. Power Plant Replacement (Cont'd)

STEP NO.	LOCATION	ITEM	ACTION	REMARKS
54.	Front muffler clamp halves (2)	Two locknuts (4), washers (3), and bolts (7)	Remove.	Discard locknuts (4).
55.	Muffler inlet pipe (1) to muffler inlet (5)	Muffler clamp halves (2)	Remove.	
56.		Muffler inlet pipe (1) and gasket (6)	Remove from muffler inlet (5).	Discard gasket (6).
57.		Muffler inlet pipe (1)	Remove from vehicle.	

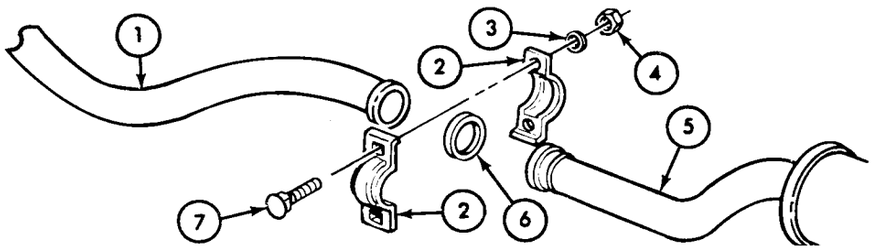

58.	Front propeller shaft (10) to transmission companion flange (13)	Four capscrews (12) and lockwashers (11)	Remove.	Discard lockwashers (11).
59.	Rear propeller shaft (14) to transfer companion flange (9)	Four capscrews (8) and lockwashers (15)	Remove.	Discard lockwashers (15).
60.		Front (10) and rear (14) propeller shafts	Remove from companion flanges (13) and (9).	Tape bearing races to propeller shaft to prevent loss.

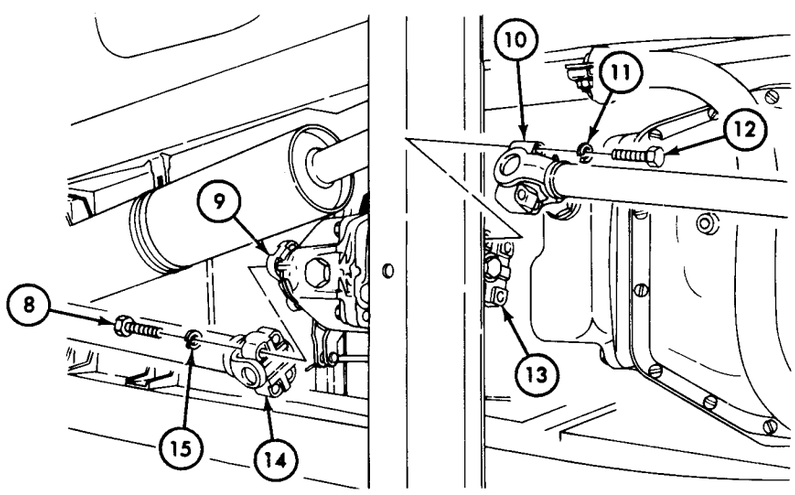

TA 156345

2-11. Power Plant Replacement (Cont'd)

STEP NO.	LOCATION	ITEM	ACTION	REMARKS
61.	Engine left front mounting bracket (16) to upper (19) and lower (20) front engine mounts	Capscrew (17), lockwasher (18), and flat washer (21)	Remove.	Remove left upper (19) and lower (20) front engine mounts during step 64*b*. Discard lockwasher (18).

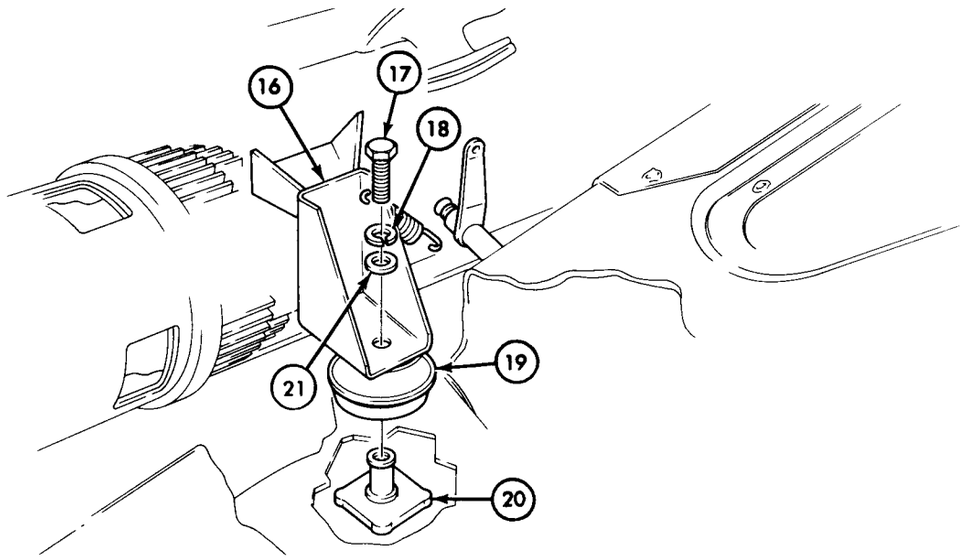

62.	Engine right front mounting bracket (24) to upper (25) and lower (26) front engine mounts	Capscrew (22), lockwasher (23), and flat washer (27)	Remove.	Remove right upper (25) and lower (26) front engine mounts during step 64*b*. Discard lockwasher (23).

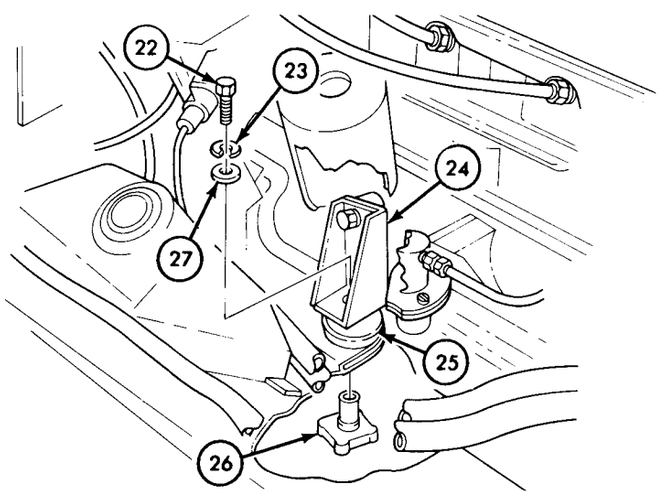

TA 156346

2-11. Power Plant Replacement (Cont'd)

STEP NO.	LOCATION	ITEM	ACTION	REMARKS
		WARNING		
		Require all unnecessary personnel to remain clear of hoisting operation to prevent injury from swinging weight.		
63.		Lifting sling (1)	Hook to engine lifting eyes (2) and take up slack.	Do not attempt to raise power plant (3) yet.

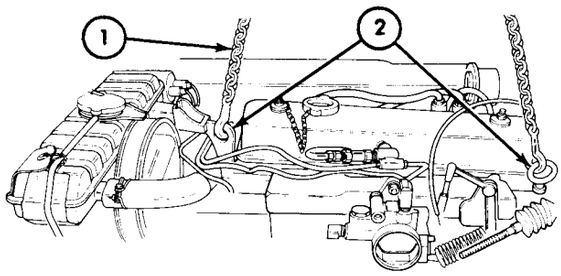

		CAUTION		
		Make sure clutch equalizer shaft is positioned away from engine.		
		NOTE		
		One assistant will push vehicle rearward while mechanic operates hoist and second assistant counterbalances power plant (3).		
64.		Power plant (3)	*a.* Lift off vehicle (4).	Counterbalance lighter front portion of power plant (3) to prevent damage of adjacent parts.
			b. Remove left upper and lower front engine mounts, and right upper and lower front engine mounts.	
		NOTE		
		Observe wiring harness for clearance during step 65.		
65.		Vehicle (4)	Push rearward while continuing to lift power plant (3).	

TA 156347

2-11. Power Plant Replacement (Cont'd)

STEP NO.	LOCATION	ITEM	ACTION	REMARKS
66.		Power plant (3)	*a.* Support under right and left front engine mounting brackets (7) with two trestles (8). *b.* Support under transmission/transfer assembly (5) with wood block (6). *c.* Unhook lifting sling (1) from lifting eyes (2).	

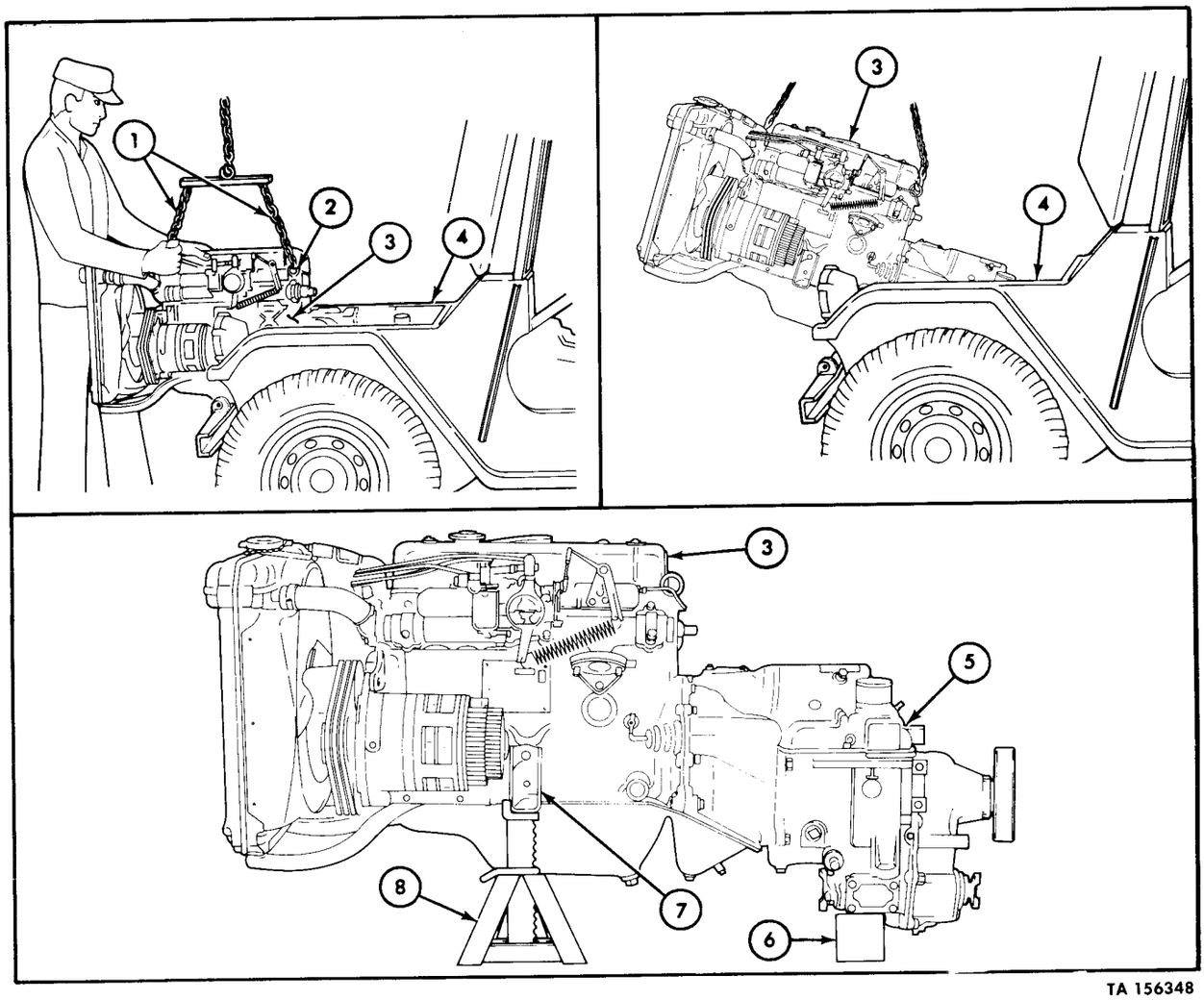

TA 156348

2-11. Power Plant Replacement (Cont'd)

STEP NO.	LOCATION	ITEM	ACTION	REMARKS
b. INSTALLATION				
67.	Firewall (1)	Wiring harness (2)	Release from three clips (3) and raise approximately 2 in. (50.8 mm).	Prevents damage during power plant (6) installation.
68.		Two front upper engine mounts (13) and (20) and two rear upper engine mounts	Place on vehicle power plant mounting locations.	

WARNING

Require all unnecessary personnel to remain clear of hoisting operation to prevent injury from swinging weight.

69.		Lifting sling (4)	Hook to engine lifting eyes (5).	
70.		Power plant (6)	Lift off supports (7).	

NOTE

- One assistant will push vehicle forward while mechanic operates hoist and second assistant counterbalances power plant (6) for installation.
- Make sure equalizer clutch shaft (12) is clear of power plant (6) during installation.

71.		Vehicle (8)	Push forward while lowering power plant (6) to vehicle mounting locations.	Be sure front and rear upper engine mounts are in place.

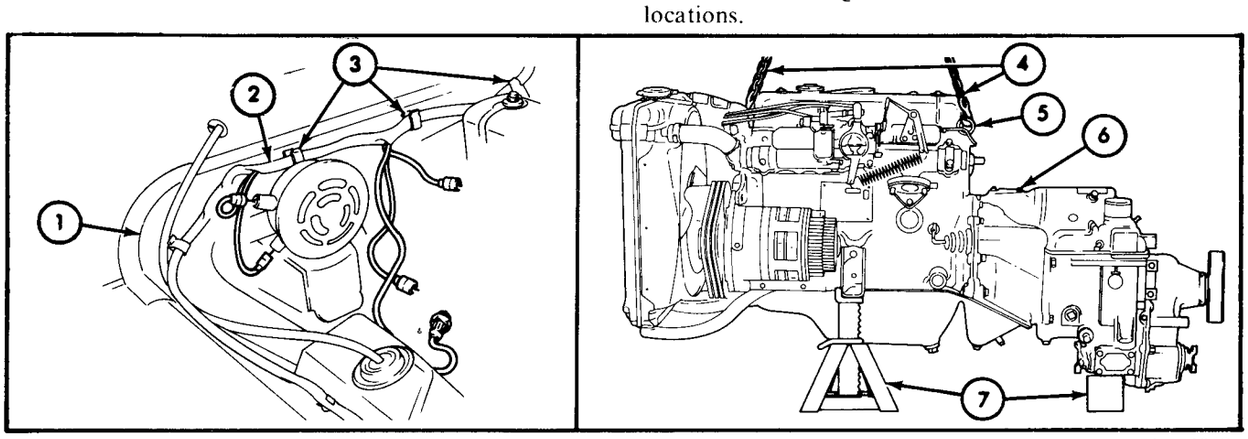

TA 156349

2-11. Power Plant Replacement (Cont'd)

STEP NO.	LOCATION	ITEM	ACTION	REMARKS

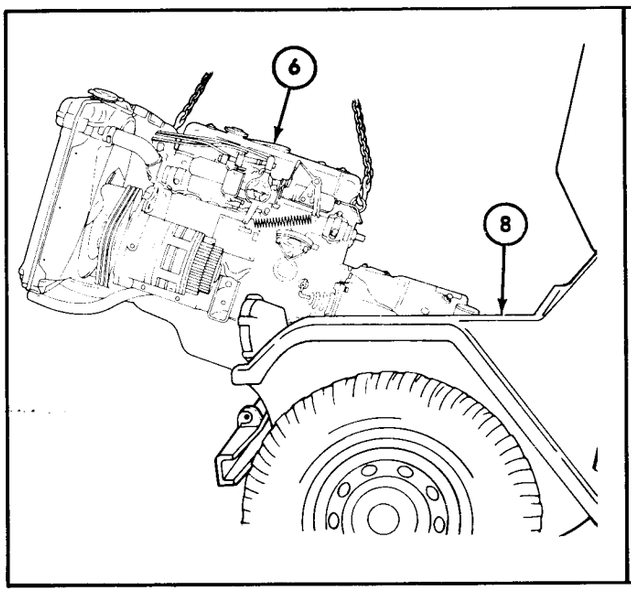

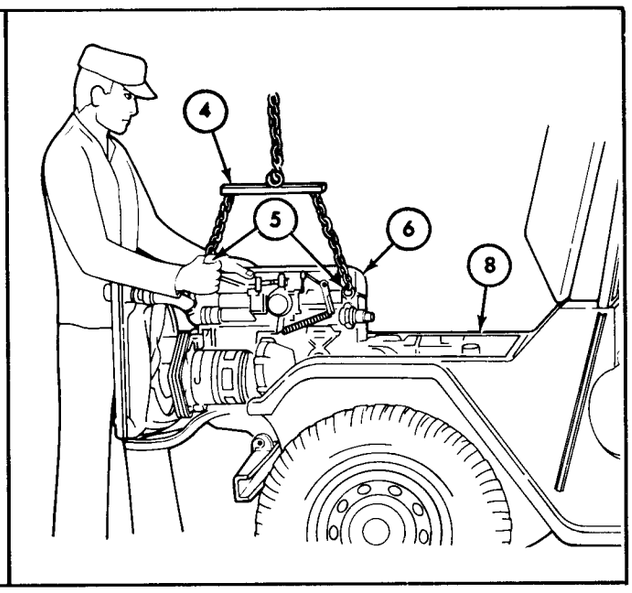

72.		Left front mounting bracket (9)	Secure to vehicle underbody (14) and left upper engine mount (13) with flat washer (16), new lockwasher (11), capscrew (10), and lower front engine mount (15).	Tighten 30-40 lb-ft (41-54 N•m).
73.		Right front mounting bracket (18)	Secure to vehicle underbody (14) and right upper engine mount (20) with flat washer (21), new lockwasher (22), capscrew (17), and lower front engine mount (19).	Tighten 30-40 lb-ft (41-54 N•m).

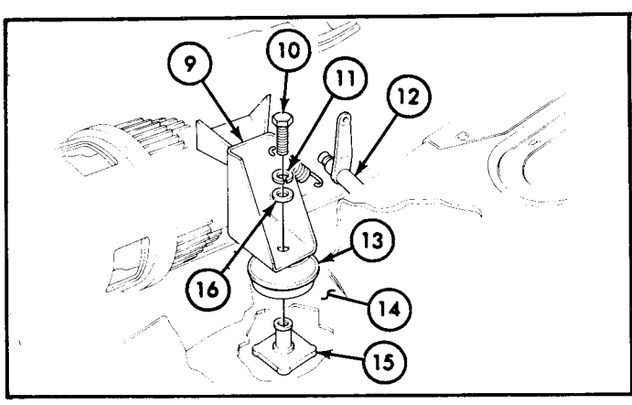

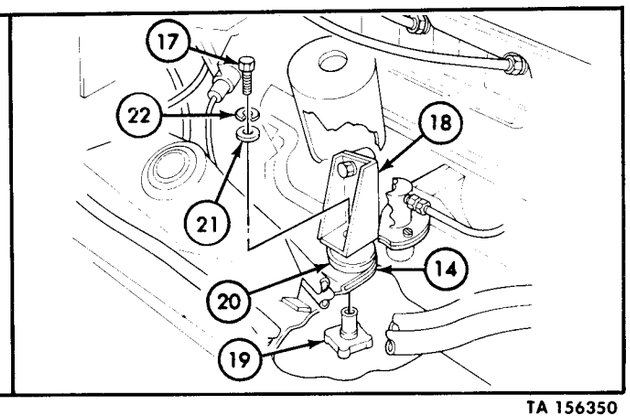

TA 156350

2-11. Power Plant Replacement (Cont'd)

STEP NO.	LOCATION	ITEM	ACTION	REMARKS
74.		Wiring harness (2)	Secure to firewall (1) with three clips (3).	

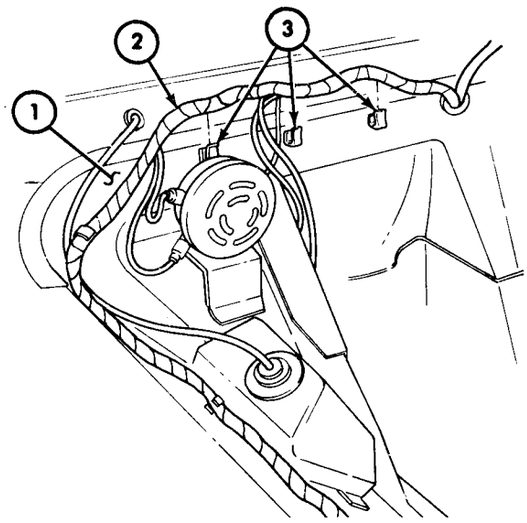

75.	Horn bracket (8) to firewall (1)	Capscrew (4), lockwasher (5), and lockwasher (7)	Remove.	Discard lockwashers (5) and (7).
76.		Engine ground cable (6)	Secure to horn bracket (8) with new lockwasher (7), new lockwasher (5), and capscrew (4).	

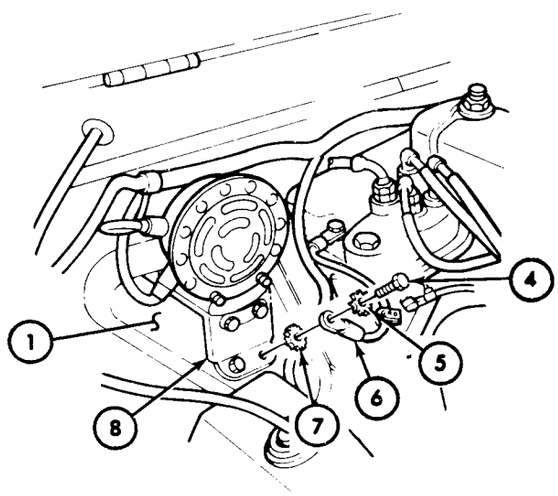

TA 156351

2-11. Power Plant Replacement (Cont'd)

STEP NO.	LOCATION	ITEM	ACTION	REMARKS
77.		Circuit 33 connector (9)	Connect to temperature sending unit (10).	
78.		Circuit 36 connector (14)	Connect to oil pressure transmitter (12).	
79.		Primary cable connector (13)	Connect to distributor receptacle (11).	

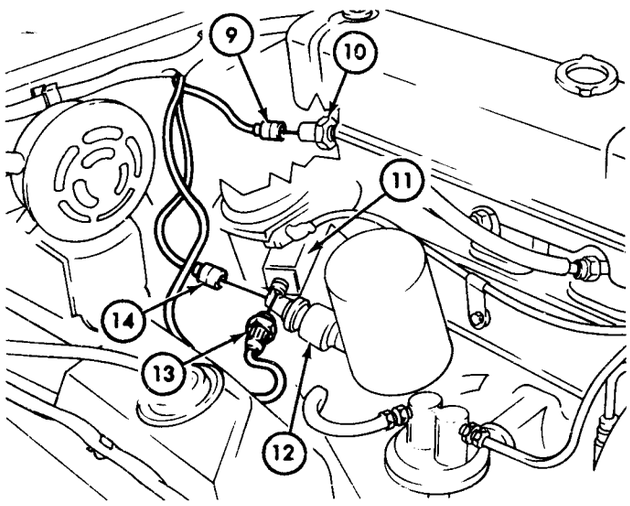

80.		Fuel inlet hose (15)	Connect to fuel pump fitting (16).	

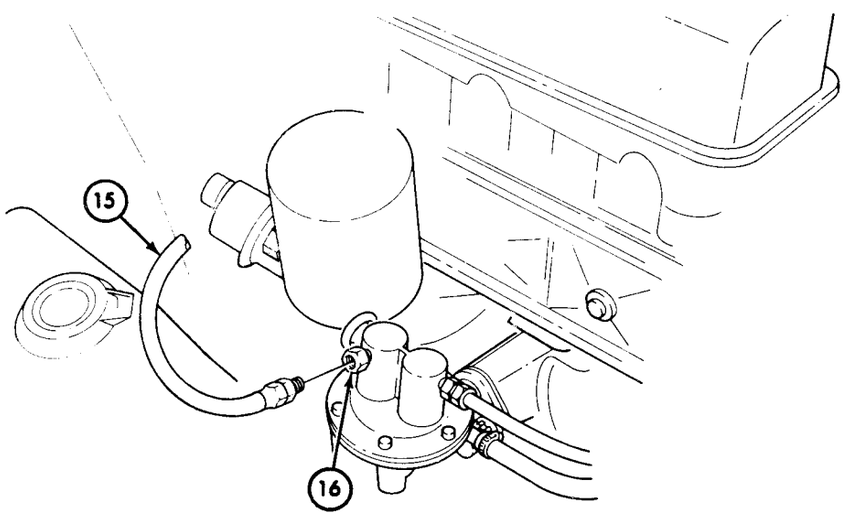

TA 156352

2-11. Power Plant Replacement (Cont'd)

STEP NO.	LOCATION	ITEM	ACTION	REMARKS
		NOTE		
		Steps 81 and 82 apply only to vehicles equipped with hot water heater kit.		
81.		Two hot water heater hoses (4)	Install on shutoff draincocks (2) and secure with two clamps (3).	
82.		Two shutoff draincocks (2)	Open by turning handles (1) counterclockwise.	

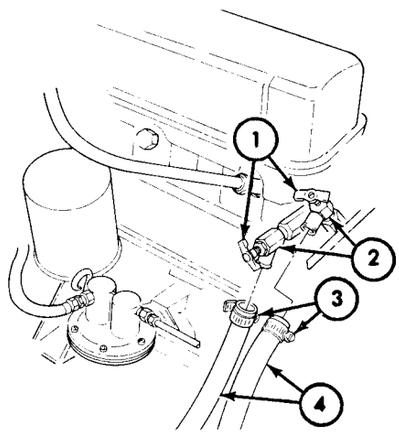

83.		Brush guard (5)	Install between front fenders (6) and secure with six flat washers (7) and bolt-assembled lockwashers (8).	

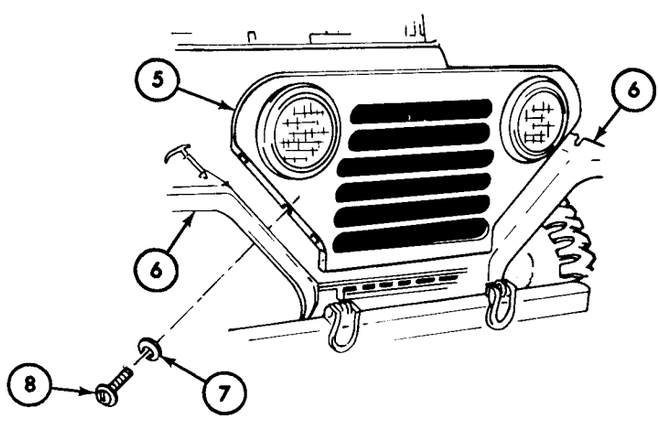

TA 156353

2-11. Power Plant Replacement (Cont'd)

STEP NO.	LOCATION	ITEM	ACTION	REMARKS
84.		Circuits 17 (9), 18 (11), and 91 (12) connectors	Connect to marked locations on left and right headlights (10).	

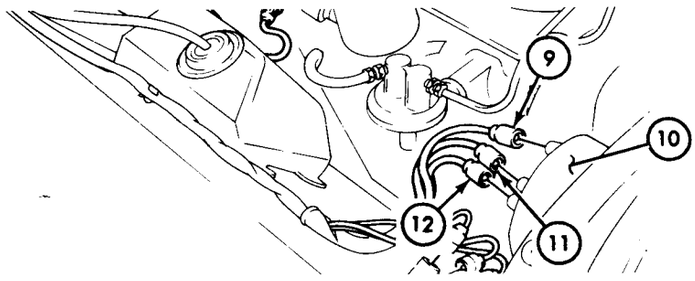

85.		Alternator circuit 3 wire (25)	Secure to alternator terminal (26) with new lockwasher (24) and bolt (23).	
86.		Circuit 568 wire (21)	Connect to alternator connector (22).	
87.		Alternator circuit 5 wire (20)	*a.* Secure to alternator terminal (27) with new lockwasher (19) and nut (18).	
			b. Seal completely.	Use adhesive sealant.
88.		Wire retaining strap (16)	Secure to alternator (13) with two screws (17).	
89.		Terminal cover (14)	Secure to alternator (13) with two screws (15).	

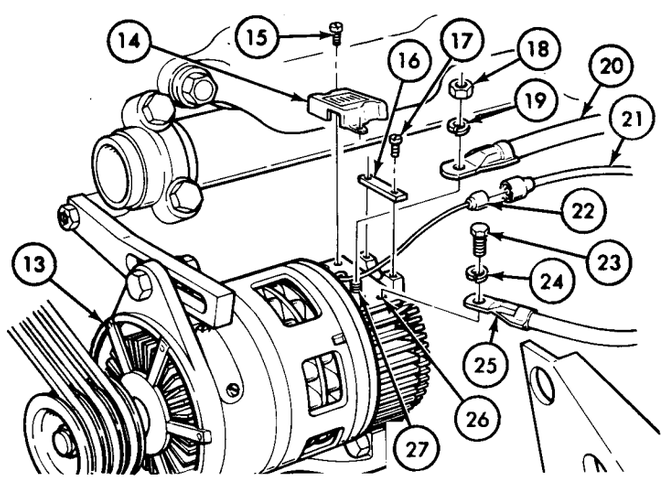

TA 156354

2-11. Power Plant Replacement (Cont'd)

STEP NO.	LOCATION	ITEM	ACTION	REMARKS
90.		Accelerator rod (4)	Secure to bellcrank (3) with trunnion clip (5).	
91.		Choke cable (2)	Slide into two cable clamps (1) and secure.	

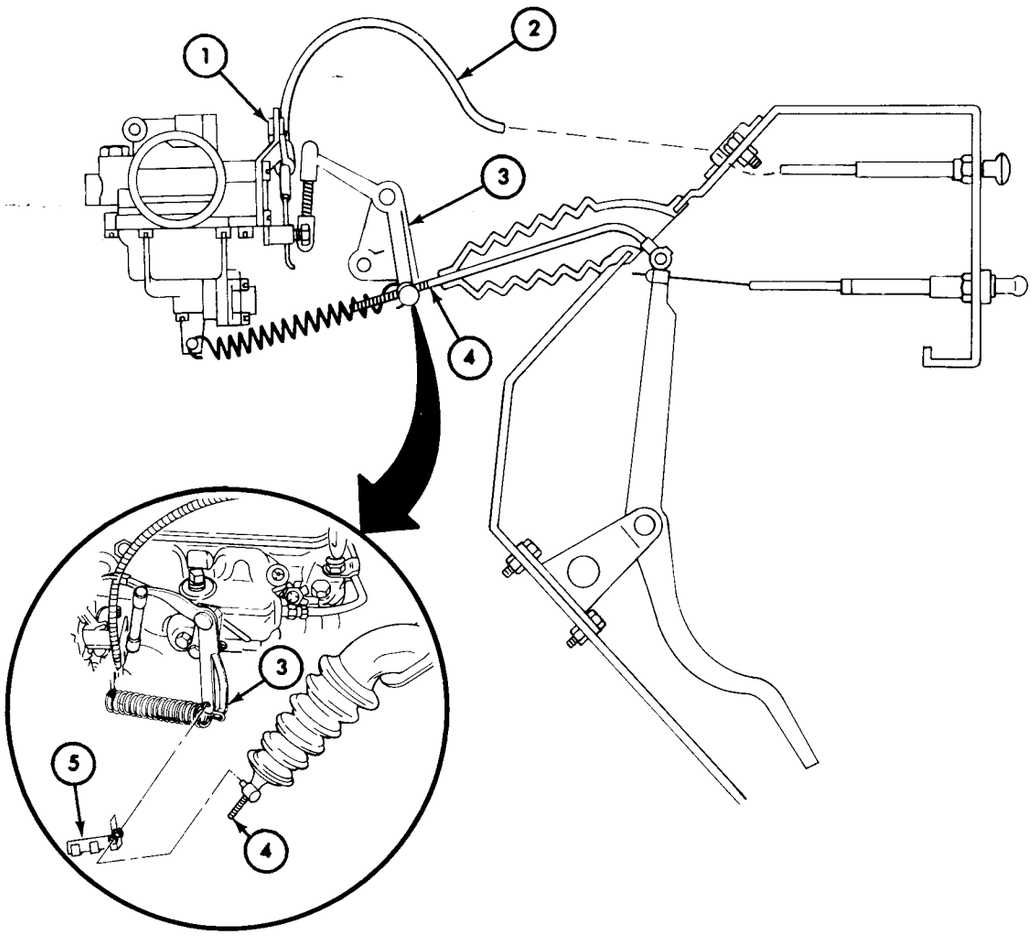

TA 156355

2-11. Power Plant Replacement (Cont'd)

STEP NO.	LOCATION	ITEM	ACTION	REMARKS
92.		Air cleaner (7)	Place on brackets (12) and secure with four bolt-assembled lock-washers (6).	
93.		Fuel tank ventilation tube (11)	Connect to center port of air cleaner tee fitting (8).	
94.		Fuel pump ventilation hose (10	Secure to air cleaner tee fitting (8) with hose clamp (9).	

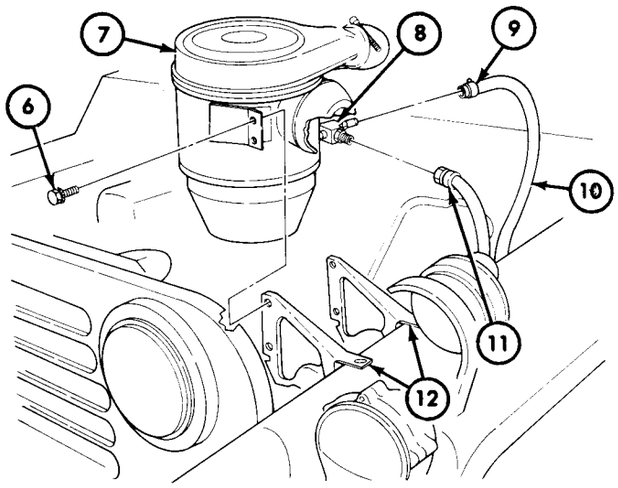

NOTE

Step 95 applies only to vehicles equipped with fuel vapor storage canister.

95.		Air supply hose (15) and vapor purge hose (14)	Secure to air cleaner assembly (7) with two hose clamps (13).	

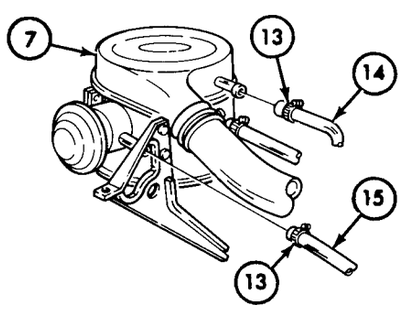

TA 156356

2-11. Power Plant Replacement (Cont'd)

STEP NO.	LOCATION	ITEM	ACTION	REMARKS
96.		Fuel return line (1)	Connect to carburetor elbow fitting (2) and tighten.	
97.		Air intake hose (5)	Connect to carburetor air intake (3) and secure with clamp (4).	

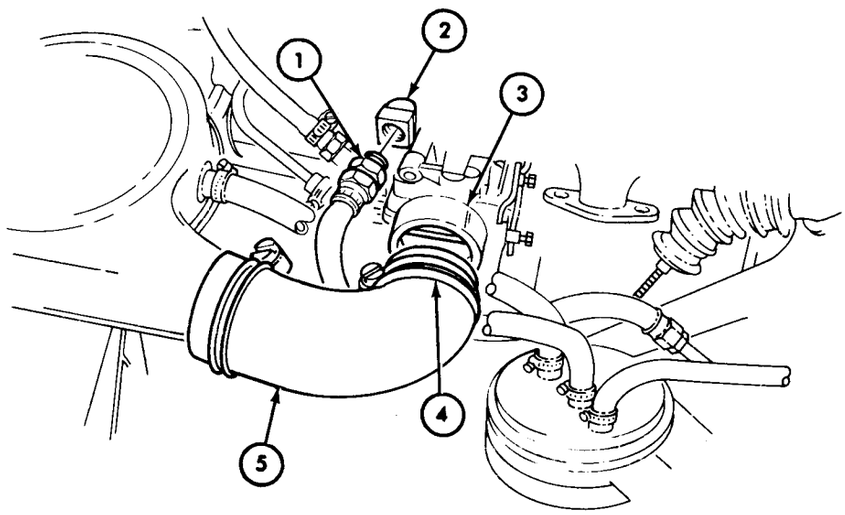

98.		Muffler inlet pipe (10) and new gasket (7)	Secure to exhaust manifold (6) with two new lockwashers (8) and nuts (9).	Tighten 15-20 lb-ft (20-27 N•m).

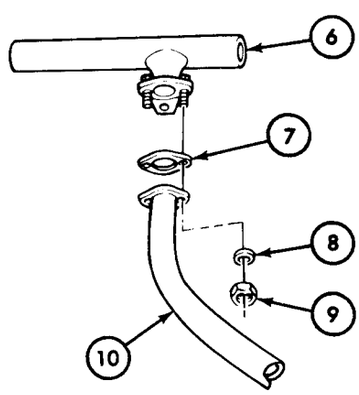

TA 156357

2-11. Power Plant Replacement (Cont'd)

STEP NO.	LOCATION	ITEM	ACTION	REMARKS
		CAUTION		
		Do not score or scratch plastic bearing (18) against engine (19) when installing rod (14) or seating bearing (18). A deformed plastic bearing (18) may not seat.		
99.	Lower left side of engine (19)	Clutch equalizer shaft (17)	*a.* Turn bracket end (16) forward and upward.	
			b. Connect outer shaft lever (15) to cross-shaft rod (14).	Insert rod (14) from outer side of shaft lever (15).
			c. Pull left, turn end with bearing (18) to engine bearing seat (20), and allow to enter hole in engine (19).	
100.		Equalizer shaft bracket (16)	Secure to vehicle frame bracket (22) with two bolts (21) and new lock-nuts (23).	Tighten 13-19 lb-ft (18-26 N•m).
101.		Clutch release rod (13)	Place end in equalizer shaft arm (12) and hook clutch return spring (11) in groove.	

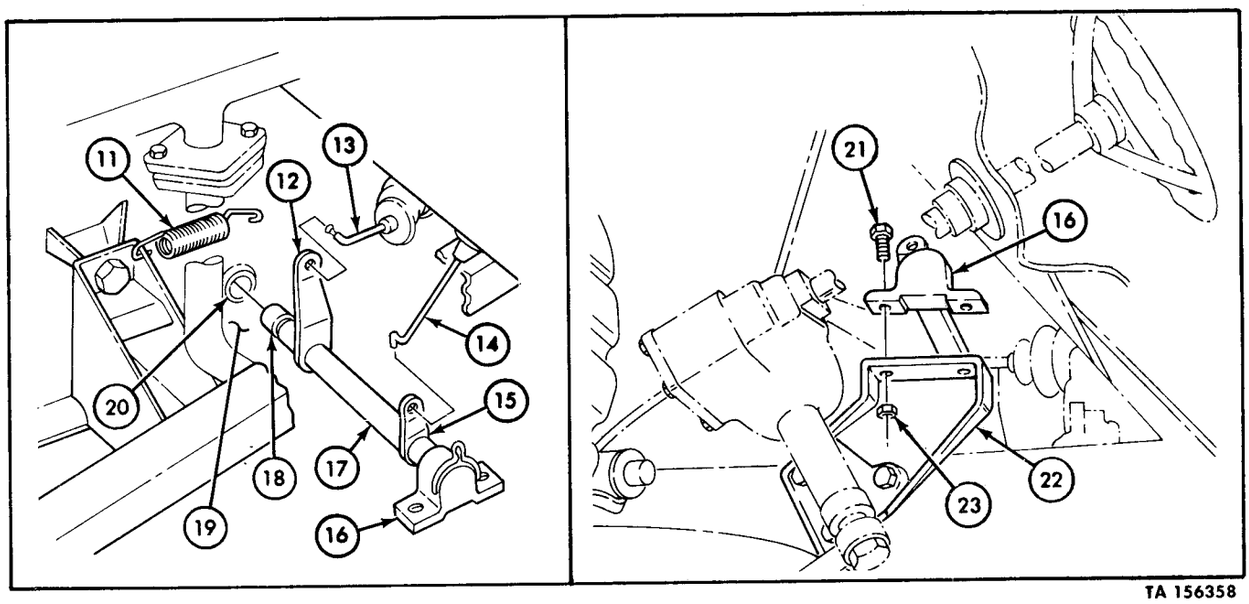

TA 156358

2-11. Power Plant Replacement (Cont'd)

STEP NO.	LOCATION	ITEM	ACTION	REMARKS
102.		Lifting sling (1)	Remove from engine lifting eyes (2).	

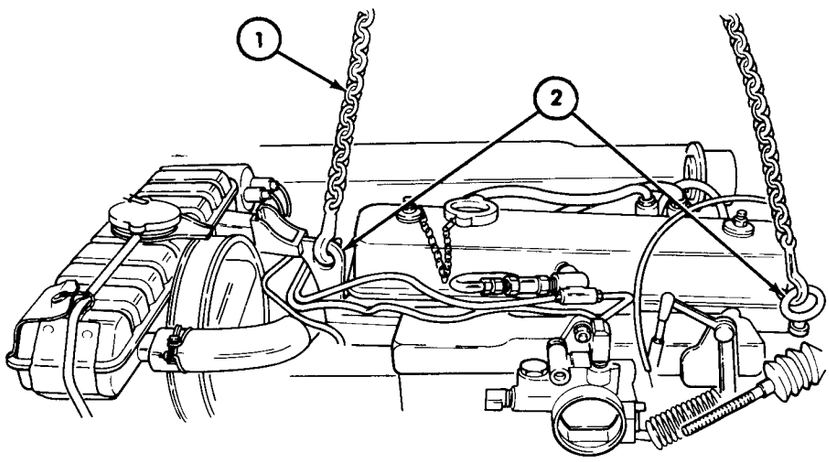

103.		Two transmission mounting brackets (3)	Secure to vehicle mounts (6) with two upper cushions (8), new lock-washers (5), capscrews (4), and lower cushions (7).	Tighten 30-40 lb-ft (41-54 N•m).

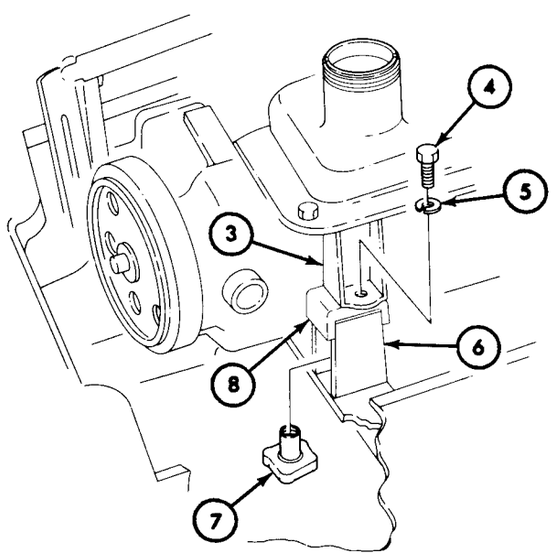

TA 156359

2-11. Power Plant Replacement (Cont'd)

STEP NO.	LOCATION	ITEM	ACTION	REMARKS
104.		Clutch lever (10)	Secure to clutch pedal shaft (9) with flat washer (11) and bolt-assembled lockwasher (12).	
105.		Transfer shift lever (13)	Secure to transmission (14) with spring washer (17), flat washer (16), and new cotter pin (15).	

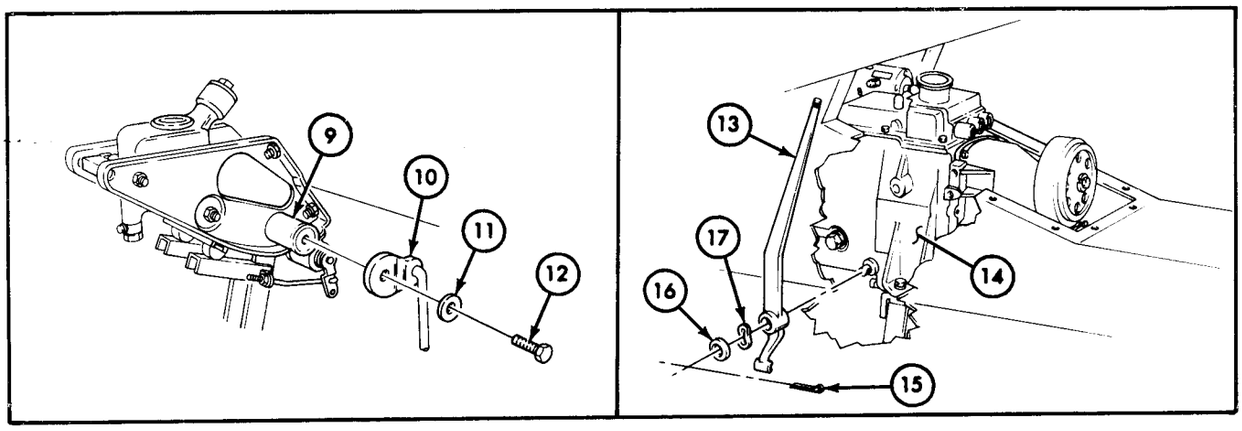

106.		Parking brake handle assembly (18)	Secure to transfer (25) with two new lockwashers (24) and capscrews (23).	
107.		Parking brake linkage (21)	Secure to handle assembly (18) and lever plates (22) with two clevis pins (19) and two new cotter pins (20).	

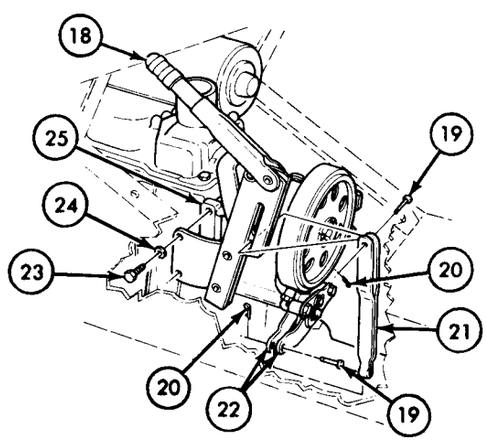

TA 156360

CHAPTER 3

ENGINE MAINTENANCE

3-1. Overview

a. This chapter provides maintenance instructions for the engine and components assigned to direct and general support levels. Each component with related information is covered in one of the following sections:

b. Sections II, III, IV, VI, and VIII precede a list that provides a breakdown of the procedures covered in that section and provides a paragraph and page number leading to each task.

c. Do not perform follow-on tasks at the end of each reassembly procedure in Section VI if complete overhaul of engine is required.

Section I. DESCRIPTION AND DATA

3-2. General

a. This section provides description and data for the L-142 engine and components.

b. Item location and terms:

(1) Fan end of engine is referred to as "front" and flywheel end as "rear".

(2) "Left" and "right" are used when viewing engine from flywheel end or "rear".

(3) Cylinders are numbered from "front" starting with the first cylinder.

(4) Crankshaft rotates in clockwise direction as viewed from front of engine.

3-3. Description

a. The M151A2, M718A1, and M825 series vehicle L-142 engine is a four cylinder, in-line, four-cycle, valve-in-head, liquid-cooled, gasoline-powered internal combustion unit.

b. Left rear and right front views of the L142 engine and components are shown on page 3-3. Identification can be made from the engine identification plate located on the center left side of the engine. For additional engine data, see table 3-1.

c. Engine exterior components and accessories are identified on page 3-3 in a 3/4 view of left rear of engine and a 3/4 view of right front of engine.

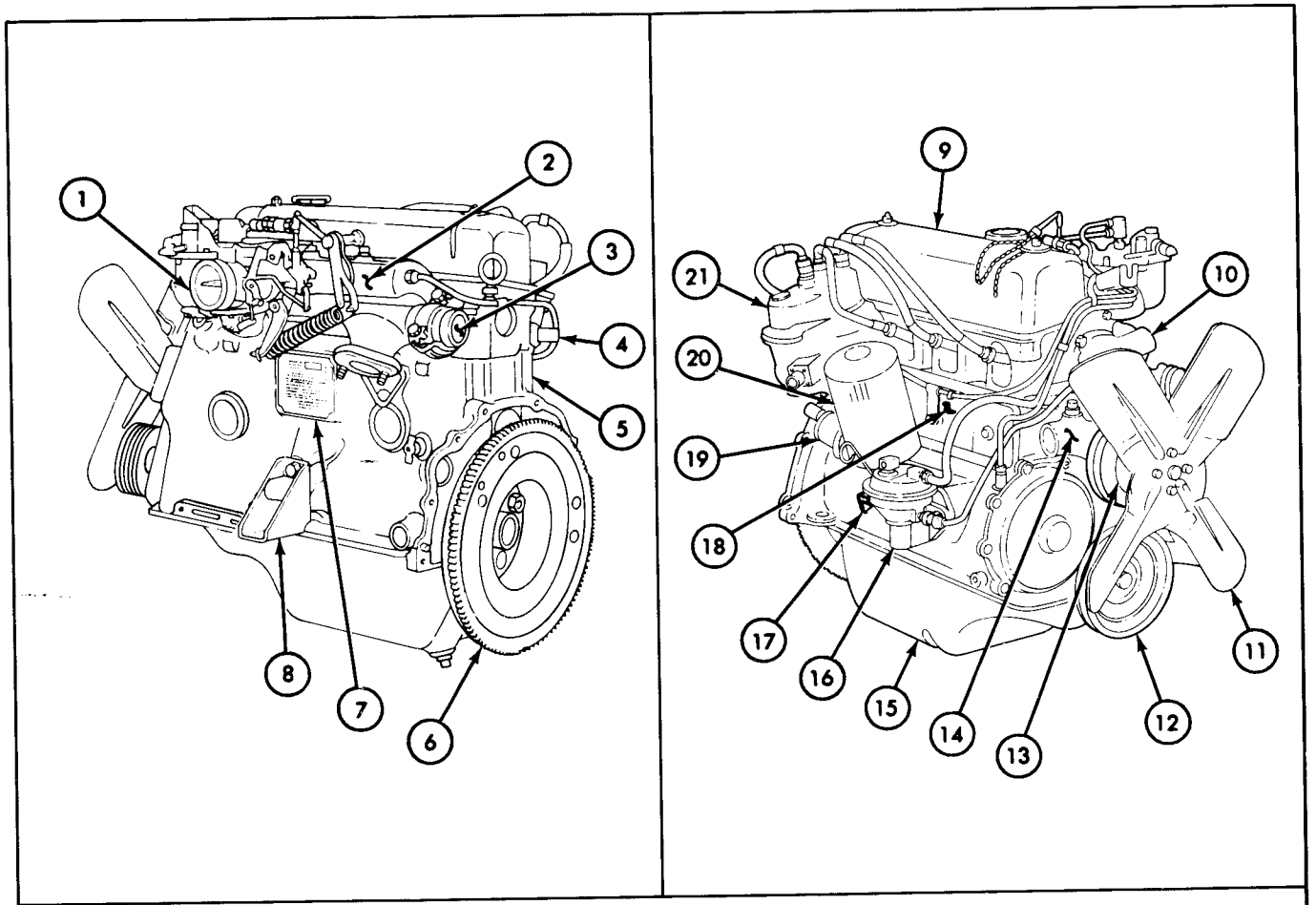

1. Carburetor
2. Intake Manifold
3. Exhaust Manifold
4. Water Temperature Transmitter
5. Cylinder Block
6. Flywheel and Clutch Assembly
7. Identification Plate
8. Left Engine Support Bracket
9. Rocker Arm Cover
10. Thermostat Housing
11. Cooling Fan
12. Crankshaft Pulley
13. Water Pump Pulley
14. Water Pump
15. Oil Pan
16. Fuel Pump
17. Right Engine Support Bracket
18. Push Rod Cover
19. Oil Pressure Transmitter
20. Oil Filter
21. Igniter (Distributor)

3-4. Tabulated Data

Table 3-1 provides tabulated data for engine assembly and components.

Table 3-1. Engine Tabulated Data.

1. ENGINE

Make	U.S. Army Design — White Manufacturing
Type	Four Cycle, Gasoline, Valve in Head, In Line, Liquid Cooled
Model	L-142

TA 156952

Table 3-1. Engine Tabulated Data (Cont'd).

1. ENGINE (Cont'd)

Dimensions — Over All:	
Length	26.750 in. (679.45 mm)
Width	17.750 in. (450.85 mm)
Height	22.000 in. (558.8 mm)
Number of Cylinders	Four
Firing Order	1-3-4-2
Type of Cylinders	Cast-In-Block
Weight (Dry)	268 lb (121.56 kg)
Bore	3.875 in. (98.4 mm)
Stroke	3.00 in. (76.2 mm)
Displacement	141.5 cu. in. (2.32L)
Compression Ratio	7.5 to 1
Number of Pistons	Four
Number of Rings Per Piston	Three-(two compression, one oil)
Crankshaft Rotation	Clockwise (viewed from front)
Compression @ Cranking Speed	135 to 145 psi (930.8-997.7 kPa)
Maximum Gross Brake Horsepower	71 @ 4000 rpm
Normal Oil Pressure	15 to 30 psi (103.4-206.8 kPa)
Normal Oil Pressure at Operating Speed	35 to 45 psi (241.3-310.2 kPa)
Normal Coolant Temperature	170°F to 190°F (76.5°C to 87.5°C)

2. VALVES

Number	
Intake	Four
Exhaust	Four
Type	Poppet
Type of Guides	Non Removable

3. OIL PUMP

Type	Gear-with Integral Pressure Relief Valve
Drive	Camshaft Helical Gear
Capacity	6.3 gpm (23.8 liters) @4000 rpm

4. WATER PUMP

Type	Centrifugal
Drive	Belt
Capacity	28 gpm (105.9 liters) @ 4000 rpm

5. OIL FILTER

Type	Full-Flow-Disposable Canister

6. VENTILATION SYSTEM

Crankcase	Closed Circuit, Including Ventilation Control Valve at Intake Manifold
Igniter (Distributor)	Independent Postive Closed Type, with Fixed Metering Orifice to Intake Manifold

Section II. PRELIMINARY ENGINE TESTS

3-5. General

This section provides instructions for engine tests assigned to direct and general support levels for the engine assembly. To locate a specific procedure within this section, see the preliminary engine tests task summary.

3-6. Preliminary Engine Tests Task Summary

3-7. Checking Valve Timing and Camshaft Lobe Lift

This task covers:

a. Checking Valve Timing *b. Checking Camshaft Lobe Lift*

INITIAL SETUP:

Applicable Models

All

Test Equipment

Valve checking dial indicator assembly
Degree wheel

Special Tools

None

Materials/Parts

None

Personnel Required

One mechanic

Manual References

TM 9-2320-218-20-1-1
TM 9-2320-218-34P

Equipment Condition Reference	Condition Description
TM 9-2320-218-20-1-1	Negative battery ground cable disconnected.
Para 3-14	Rocker arm cover removed.
Para 3-14	Spark plugs removed.

Special Environmental Conditions

Clean, well-ventilated work area.

General Safety Instructions

None

STEP NO.	LOCATION	ITEM	ACTION	REMARKS

a. CHECKING VALVE TIMING

NOTE

- Check valve timing only when poor performance is noted and all other possible causes have been eliminated.
- Timing pointer must be straight to check valve timing correctly.
- Checking valve timing may indicate faulty timing gears or defective camshaft. This preliminary check could prevent the need for major engine disassembly.
- It is only necessary to check valve timing for one valve.

3-7. Checking Valve Timing and Camshaft Lobe Lift (Cont'd)

STEP NO.	LOCATION	ITEM	ACTION	REMARKS
1.		Crankshaft pulley (1)	Turn until no. 2 push tube (6) is approximately at lowest point of travel.	
2.	No. 2 rocker lever (2)	Adjusting screw (3)	Loosen and move rocker lever (2) to one side.	
3.		Dial indicator assembly (4)	Secure to cylinder head (5) so that indicator tip is centered in push tube (6) socket.	Be sure push tube (6) is seated in tappet.
4.		Degree wheel	Install on crankshaft pulley (1).	If degree wheel is not available, mark pulley in degrees as necessary.
5.		Crankshaft pulley (1)	Turn clockwise until no. 2 push tube (6) is at lowest point of travel as indicated on dial indicator (4).	

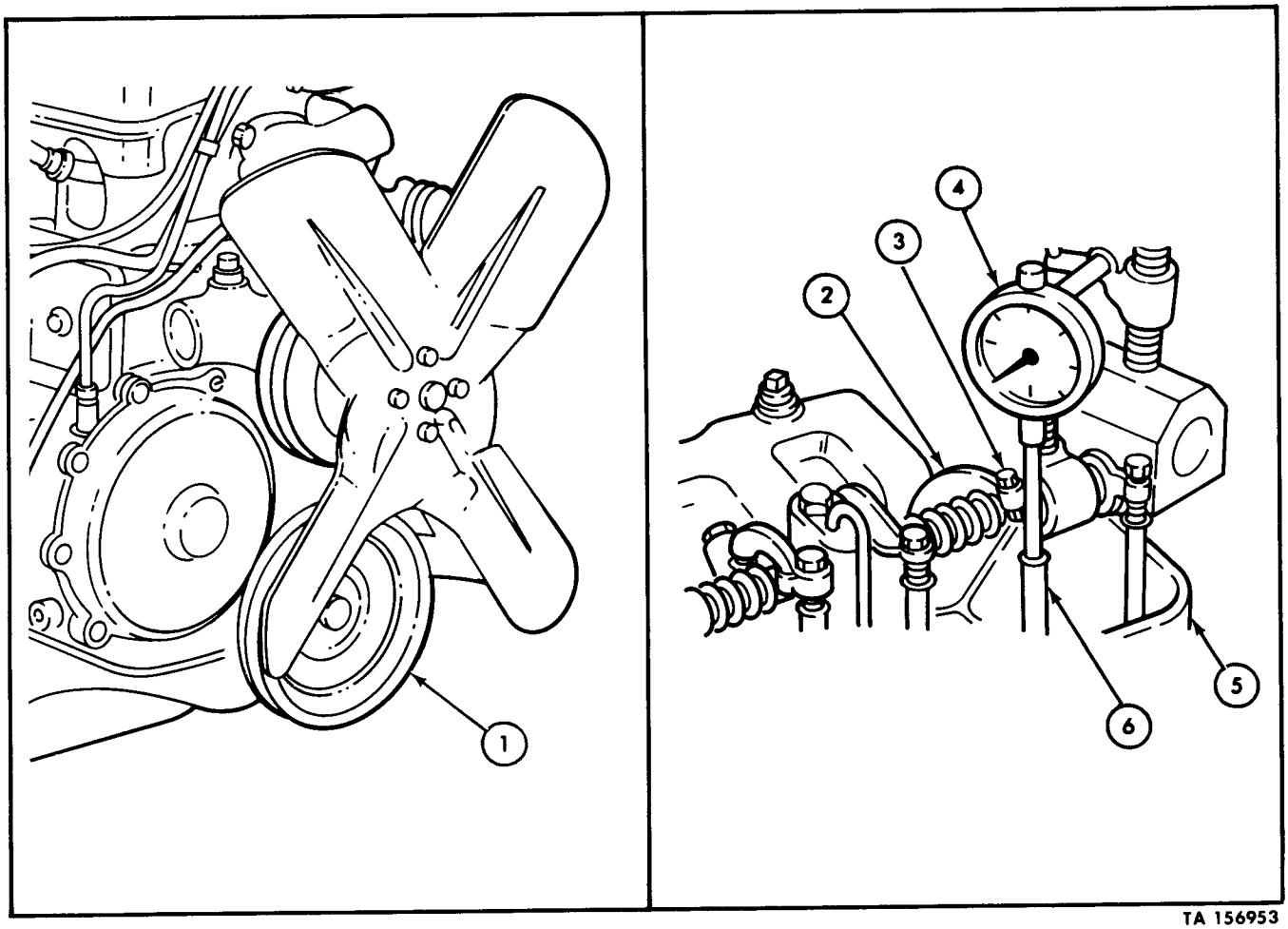

TA 156953

3-7. Checking Valve Timing and Camshaft Lobe Lift (Cont'd)

STEP NO.	LOCATION	ITEM	ACTION	REMARKS
6.		Dial indicator assembly (2)	Set to "zero".	
7.		Crankshaft pulley (1)	Turn clockwise until degree wheel registers 13° Before Top Dead Center (BTDC).	Dial indicator should read .0125 in. (.31 mm). If not, either timing chain, timing timing gears, tappet, or camshaft is defective.

b. CHECKING CAMSHAFT LOBE LIFT

NOTE

- Check all push tubes (3) for camshaft lobe lift.
- All lobes are checked the same way; only one is covered here.

8.		Dial indicator (2)	Position as outlined in in steps 1, 2, 3, 5, and 6.	
9.		Crankshaft pulley (1)	Turn clockwise until dial indicator (2) indicates highest reading.	Reading should meet specications in table 3-2. If not, either camshaft or tappet is is worn.

Table 3-2. Camshaft Lobe Lift Specifications.

Valve	Lift	Wear Limit
Intake	.2419 in. (6.14 mm)	.2369 in. (6.017 mm)
Exhaust	.2380 in. (6.04 mm)	.2330 in. (5.92 mm)

3-7. Checking Valve Timing and Camshaft Lobe Lift (Cont'd)

STEP NO.	LOCATION	ITEM	ACTION	REMARKS

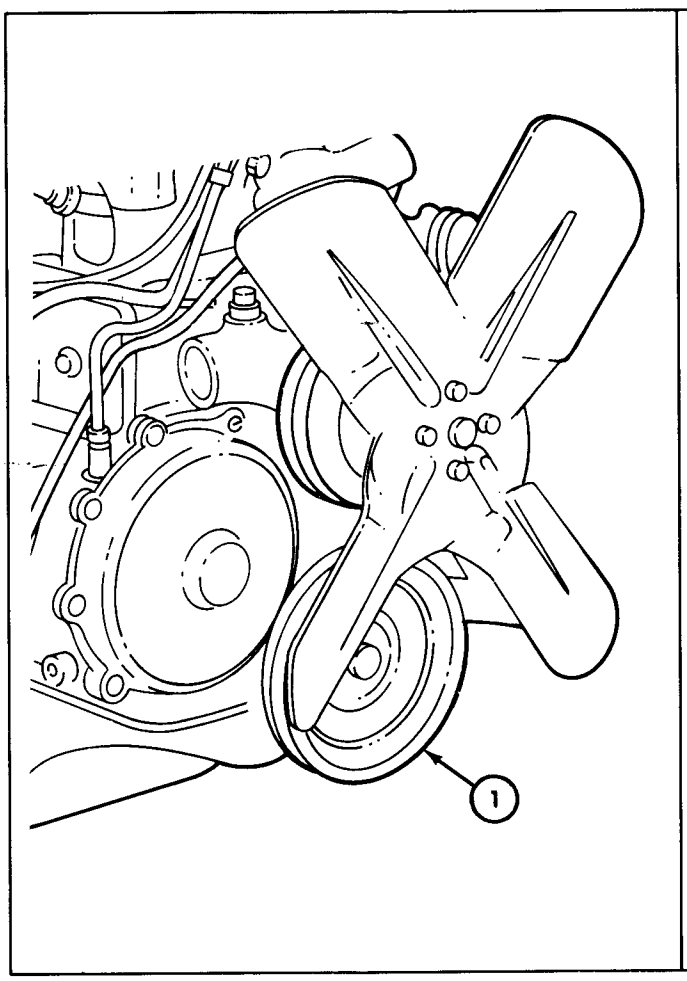

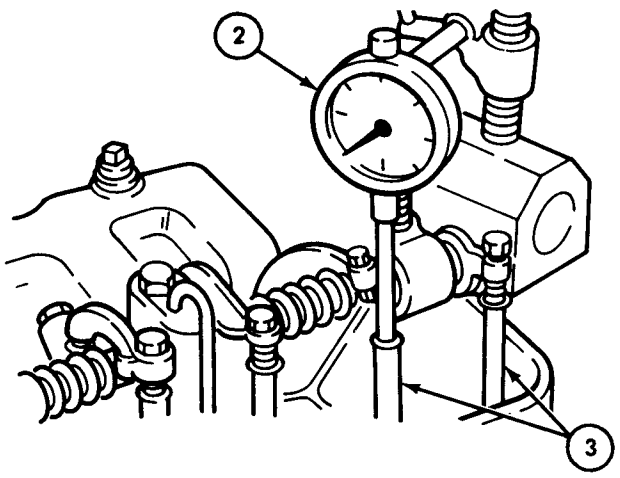

END OF TASK!

FOLLOW-ON TASK:
- Install rocker arm cover (para 3-17).
- Install spark plugs (para 3-17).
- Connect negative battery ground cable (TM 9-2320-218-20-1-1).

TA 156954

Section III. PRELIMINARY ENGINE DISASSEMBLY INSTRUCTIONS

3-8. General

This section provides preliminary engine disassembly instructions assigned to direct and general support levels.

3-9. Inspection and General Engine Disassembly Requirements

a. All parts should be inspected, tagged with engine serial number, and checked for proper tolerance during engine dissassembly.

b. Only replace parts that are cracked, broken, missing, or not meeting specifications in Section VII, Repair and Replacement Standards.

c. Replace all parts specified as mandatory replacement parts during engine repair procedures.

3-10. Preparation of Engine for Repair Task Summary

3-11. Preparation of Engine for Repair

This task covers:

a. Covering Openings
b. Lifting
c. Removing Left Engine Mount Bracket
d. Removing Alternator and Radiator Brackets
e. Positioning Engine on Repair Stand
f. Cleaning

INITIAL SETUP:

Applicable Models
All

Equipment Condition Reference
Para 2-13

Condition Description
Engine removed.

Test Equipment
None

Special Tools
Improvised engine support bracket (see Appendix D)
Engine lifting sling
Engine repair stand

Special Environmental Conditions
Clean, well-ventilated work area.

Materials/Parts
Drycleaning solvent

Personnel Required
One mechanic
One assistant

General Safety Instructions
- All personnel must stand clear during hoisting operations.
- Use eye protection when working with compressed air.
- Keep fire extinguisher nearby when using drycleaning solvent.

Manual References
TM 9-2320-218-34P

STEP NO.	LOCATION	ITEM	ACTION	REMARKS
a. COVERING OPENINGS				
1.	Engine	All openings	Cover.	Covering openings is necessary to prevent water and foreign material from entering engine.
b. LIFTING				

WARNING

All personnel must stand clear during lifting or hoisting operations. A heavy, swinging load may cause severe injury.

3-11. Preparation of Engine for Repair (Cont'd)

STEP NO.	LOCATION	ITEM	ACTION	REMARKS
2.		Engine lifting sling (2)	*a.* Hook to engine lifting eyes (1) and (3).	Engine will be supported by lifting sling (2) until mounted on repair stand.
			b. Lift enough to raise engine off support stands.	
	c. REMOVING LEFT ENGINE MOUNT BRACKET			
3.	Left side engine mount bracket (7) to cylinder block (10)	Two bolts (9) and lockwashers (8)	Remove.	Discard lockwashers (8).
4.		Left engine mount bracket (7)	Remove from cylinder block (10).	
	d. REMOVING ALTERNATOR AND RADIATOR BRACKETS			
5.	Alternator adjusting link (6) to cylinder head (5)	Bolt (4)	Remove.	
6.		Adjusting link (6)	Remove from cylinder head (5).	
7.	Alternator mounting bracket (13) to cylinder block (10)	Locking tab washer (11)	Bend all tabs down.	

3-11. Preparation of Engine for Repair (Cont'd)

STEP NO.	LOCATION	ITEM	ACTION	REMARKS
		NOTE		
		The alternator bracket (13) and left radiator support bracket (14) are removed at the same time.		
8.		Two capscrews (12)	Remove and detach locking tab washer (11).	Discard locking tab washer (11).
9.		Brackets (13) and (14)	Remove from cylinder block (10).	

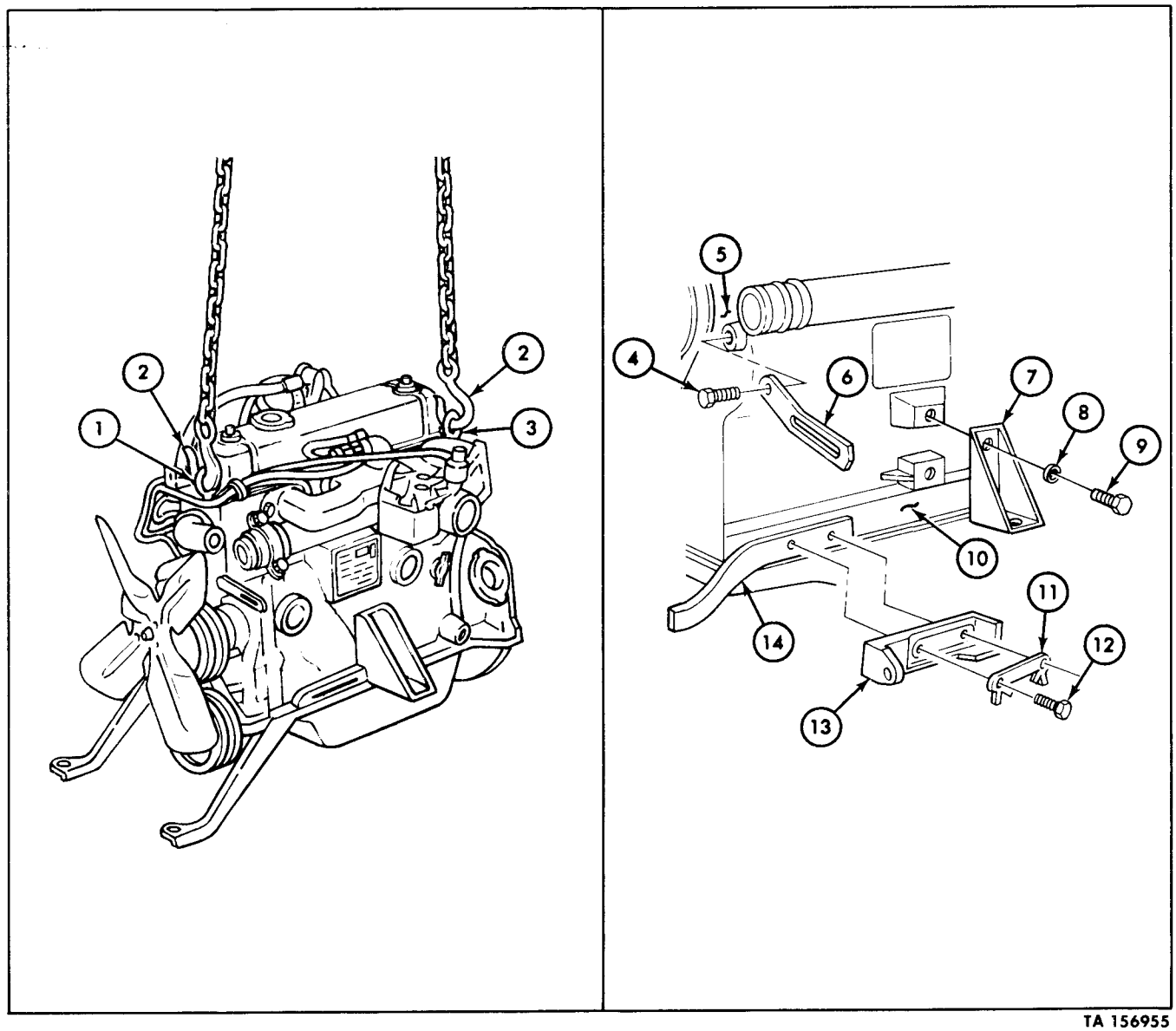

TA 156955

3-11. Preparation of Engine for Repair (Cont'd)

STEP NO.	LOCATION	ITEM	ACTION	REMARKS
e. POSITIONING ENGINE ON REPAIR STAND				
10.		Improvised engine support bracket (2)	Secure to engine stand (3) with four bolts (1) and nuts (4).	
		WARNING • Make sure lift chain is securely fastened to engine lifting eyes. • All personnel must stand clear during hoisting or lifting operations. A heavy, swinging load can cause severe injury.		
11.		Engine assembly (5)	*a.* Lift and position to improvised engine support bracket (2) on engine stand (3).	
			b. Secure to bracket (2) with four bolts (6).	Bracket (2) is secured to alternator bracket and engine mount bracket mounting locations.

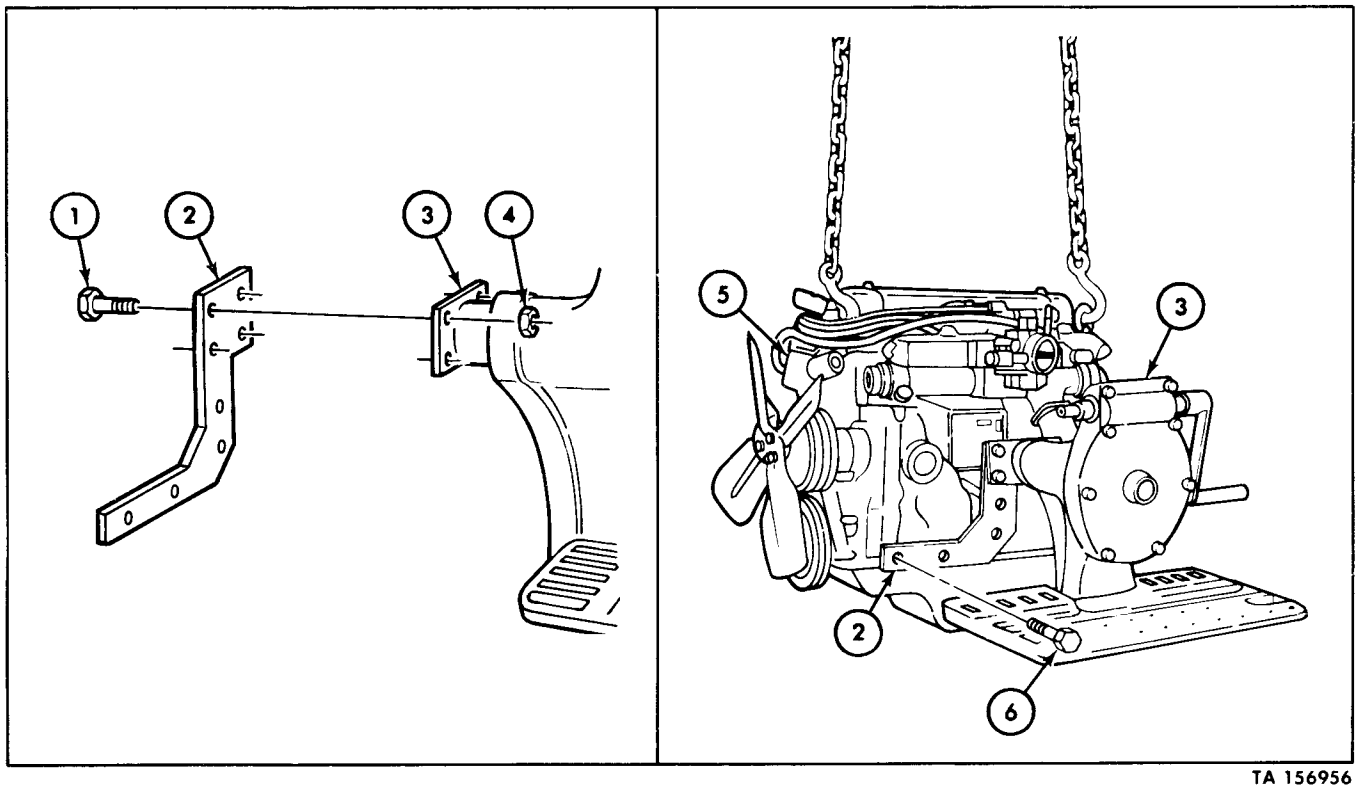

TA 156956

3-11. Preparation of Engine for Repair (Cont'd)

STEP NO.	LOCATION	ITEM	ACTION	REMARKS
f. CLEANING				

WARNING

- When cleaning with compressed air, eyeshields must be worn. Failure to wear eyeshields may result in injury to the eyes and loss of sight.
- Drycleaning solvent is flammable and will not be used near an open flame. A fire extinguisher will be kept nearby when the solvent is used. Use only in well-ventilated places. Failure to do so may result in injury to personnel and/or damage to equipment.

NOTE

Refer to paragraph 3-19 for general cleaning instructions.

12.	Engine assembly	External parts and outer surfaces	*a.* Remove grease and dirt with drycleaning solvent and stiff brush.	
			b. Wash with water under pressure.	Make sure that no foreign material enters working parts of engine and accessories.
			c. Dry with compressed air.	

END OF TASK!

Section IV. ENGINE DISASSEMBLY AND REASSEMBLY

3-12. General

This section provides instructions for engine disassembly and reassembly assigned to direct and general support levels. To locate a specific procedure within this section, see the engine disassembly and reassembly task summary below:

3-13. Engine Disassembly and Reassembly Task Summary

TASK PARA	PROCEDURES	PAGE NO.
3-14.	Removal of External Engine Components a. Carburetor and Bellcrank b. Vent Lines c. Intake Manifold d. Exhaust Manifold e. Water Pump, Fan, and Pulley f. Thermostat g. Rocker Arm Cover h. Fuel Pump i. Oil Filter j. Oil Pressure Transmitter k. Right Engine Mounting Bracket l. Distributor m. Spark Plugs n. Fuel Line o. Coolant Temperature Sending Unit	3-18
3-15.	Disassembly of Engine into Subassemblies a. Cylinder Head b. Oil Pan c. Oil Pump and Strainer Assembly d. Pistons and Connecting Rods e. Crankshaft Pulley f. Timing Gear Cover and Crankshaft Oil Slinger g. Flywheel and Clutch Pilot Bearing h. Crankshaft and Main Bearings i. Camshaft and Tappets j. Oil Filter Adapter	3-30

3-13. Engine Disassembly and Reassembly Task Summary (Cont'd)

TASK PARA	PROCEDURES	PAGE NO.
3-16.	Reassembly of Engine from Subassemblies a. Crankshaft, Main Bearings, and Seals b. Valve Tappets and Camshaft c. Flywheel and Clutch Pilot Bearing d. Pistons and Connecting Rods e. Oil Pump and Strainer Assembly f. Crankshaft Oil Slinger and Timing Gear Cover g. Crankshaft Pulley h. Oil Pan i. Valve Push Rod Cover j. Cylinder Head k. Oil Filter Adapter	3-46
3-17.	Installation of External Engine Components a. Coolant Temperature Sending Unit b. Distributor c. Spark Plugs d. Right Engine Mounting Bracket e. Oil Pressure Transmitter f. Oil Filter g. Fuel Line h. Fuel Pump i. Rocker Arm Cover j. Water Pump, Fan, and Pulley k. Thermostat l. Exhaust Manifold m. Intake Manifold n. Vent Lines o. Carburetor and Bellcrank	3-68

3-14. Removal of External Engine Components

This task covers:

a. Carburetor and Bellcrank
b. Vent Lines
c. Intake Manifold
d. Exhaust Manifold
e. Water Pump, Fan, and Pulley
f. Thermostat
g. Rocker Arm Cover
h. Fuel Pump
i. Oil Filter
j. Oil Pressure Transmitter
k. Right Engine Mounting Bracket
l. Distributor
m. Spark Plugs
n. Fuel Line
o. Coolant Temperature Sending Unit

INITIAL SETUP:

Applicable Models	Equipment Condition Reference	Condition Description
All	Para 3-11	Engine mounted on repair stand.

Test Equipment
None

Special Tools
None

Materials/Parts
None

Personnel Required
One mechanic

Manual References
TM 9-2320-218-34P

Special Environmental Conditions
Clean, well-ventilated work area.

General Safety Instructions
Do not work on engine near sparks or open flame.

STEP NO.	LOCATION	ITEM	ACTION	REMARKS

WARNING

Fuel vapors are extremely flammable. Do not work on engine near sparks or open flame. Severe injury will result if fuel vapor is ignited.

a. CARBURETOR AND BELLCRANK

1.	Fuel supply line (1) to fuel filter (12)	Hose clamp (13)	Loosen and remove fuel supply line (1) from filter (12).	
2.	Carburetor ventilation line elbow fitting (6)	Two ventilation lines (2)	Disconnect.	Note location of ventilation lines (2) for installation.
3.	Throttle spring bracket (8) and bellcrank (15)	Throttle return spring (4)	Disconnect and remove.	

3-14. Removal of External Engine Components (Cont'd)

STEP NO.	LOCATION	ITEM	ACTION	REMARKS
4.	Rear of carburetor (7)	Bellcrank rod (14)	Disconnect.	
5.	Carburetor (7) to intake manifold (3)	Two nuts (9), lockwashers (10), flat washers (11), and throttle spring bracket (8)	Remove.	Discard lockwashers (10).
6.		Carburetor (7) and gasket (5)	Remove from intake manifold (3).	Discard gasket (5).
7.	Accelerator bellcrank (15) to intake manifold (3)	Two capscrew-assembled lockwashers (16)	Remove.	
8.		Accelerator bellcrank (15)	Remove from intake manifold (3).	

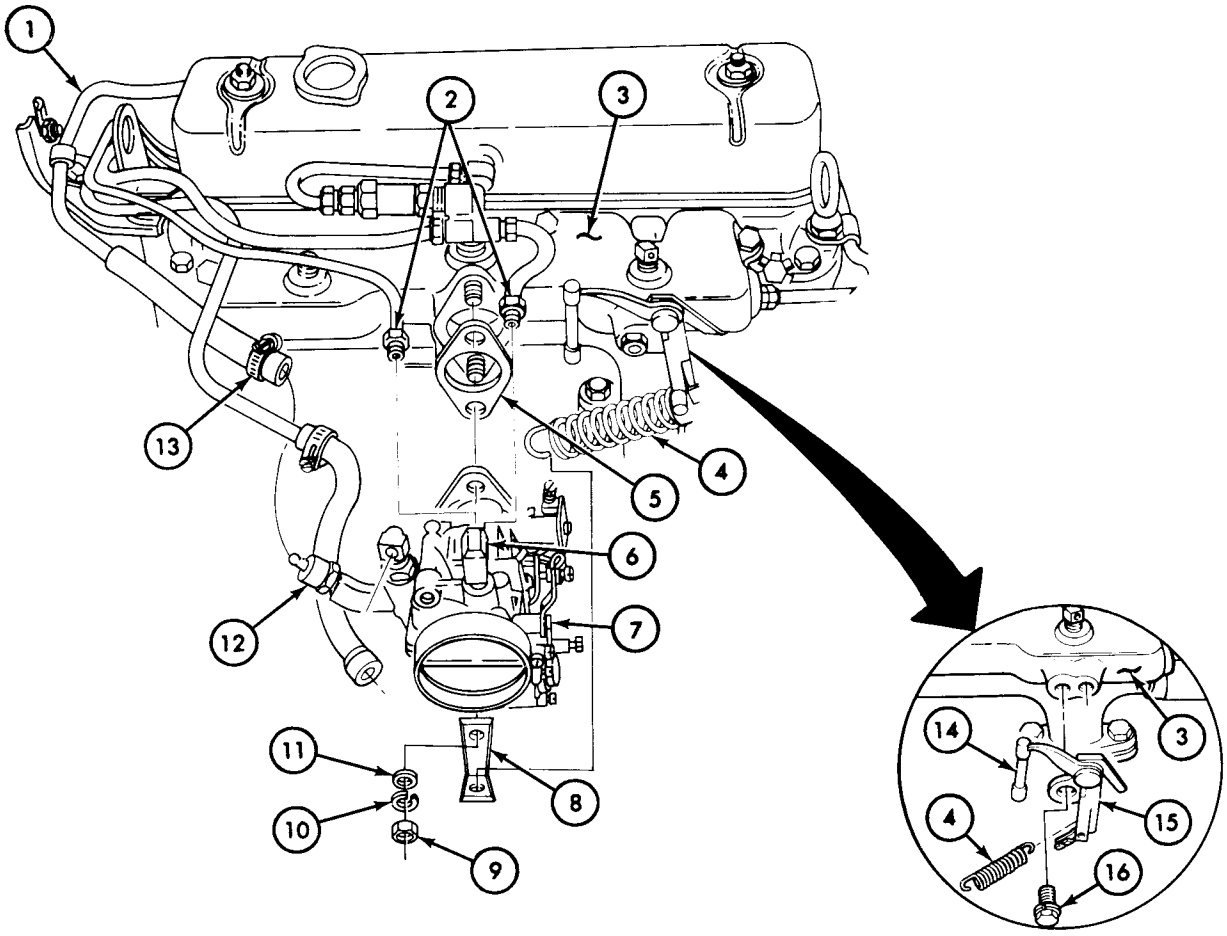

TA 156957

3-14. Removal of External Engine Components (Cont'd)

STEP NO.	LOCATION	ITEM	ACTION	REMARKS
	b. VENT LINES			
9.	Rocker arm cover elbow (5) and crankcase vent valve (3)	Rocker arm cover vent line (2)	Remove.	
10.	Intake manifold adapter (4)	Crankcase vent valve (3)	Remove.	
11.	Intake manifold adapter (4)	Crankcase vent line (1) and carburetor vent line (6)	Disconnect.	
12.	Intake manifold (7)	Intake manifold adapter (4)	Remove.	
13.	Rear of intake manifold (7)	Distributor vent line (8)	Disconnect.	

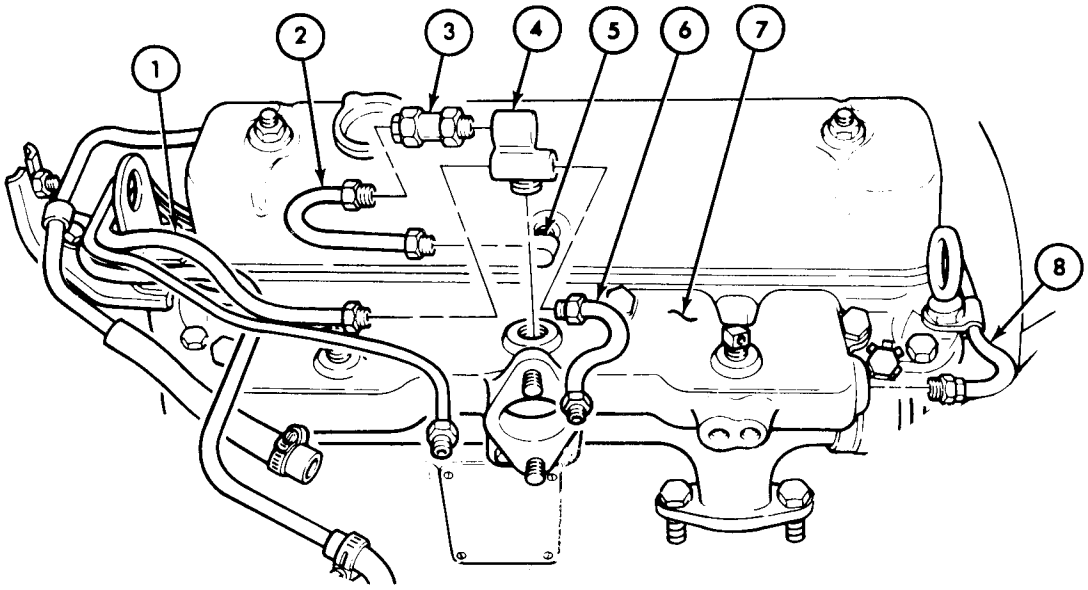

14.	Crankcase vent adapter (13)	Crankcase vent line (1)	Remove.	
15.	Distributor vent line clamp (10) to valve push rod cover (12)	Screw (9) and seal (11)	Remove.	Discard seal (11).
16.		Distributor vent line (14) and clamp (10)	Remove from valve push rod cover (12).	

TA 156958

3-14. Removal of External Engine Components (Cont'd)

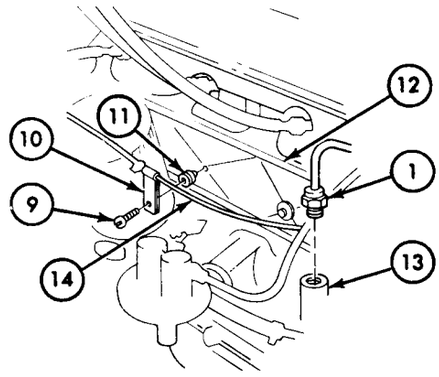

STEP NO.	LOCATION	ITEM	ACTION	REMARKS
	c. INTAKE MANIFOLD			
17.	Intake manifold (7) to cylinder head (15)	Two lower capscrews (16) and locking tab washer (17)	Bend tabs on washer (17) down and remove.	Discard locking tab washer (17).
18.	Intake manifold (7) to cylinder head (15)	Four upper capscrews (18), lockwashers (19), and flat washers (20)	Remove.	Discard lockwashers (19).
19.		Intake manifold (7) and and two gaskets (21)	Remove from cylinder head (15).	Discard two gaskets (21).

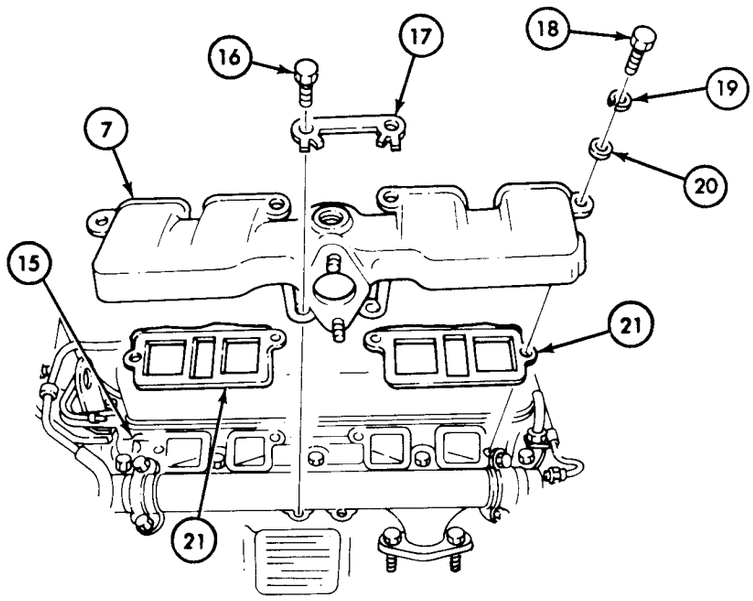

TA 156959

3-14. Removal of External Engine Components (Cont'd)

STEP NO.	LOCATION	ITEM	ACTION	REMARKS
d. EXHAUST MANIFOLD				
20.	Exhaust manifold flange (5) to cylinder head (8)	Capscrew (7) and lockwasher (6)	Remove.	Discard lockwasher (6).
21.	Two exhaust manifold clamps (1)	Four tab lock-washers (3)	Bend down all tabs.	
22.	Exhaust manifold (2) to cylinder head (8)	Four capscrews (4), tab lockwashers (3), and two mounting clamps (1)	Remove.	Discard four tab lock-washers (3).
23.		Exhaust manifold (2)	Remove from cylinder head (8).	

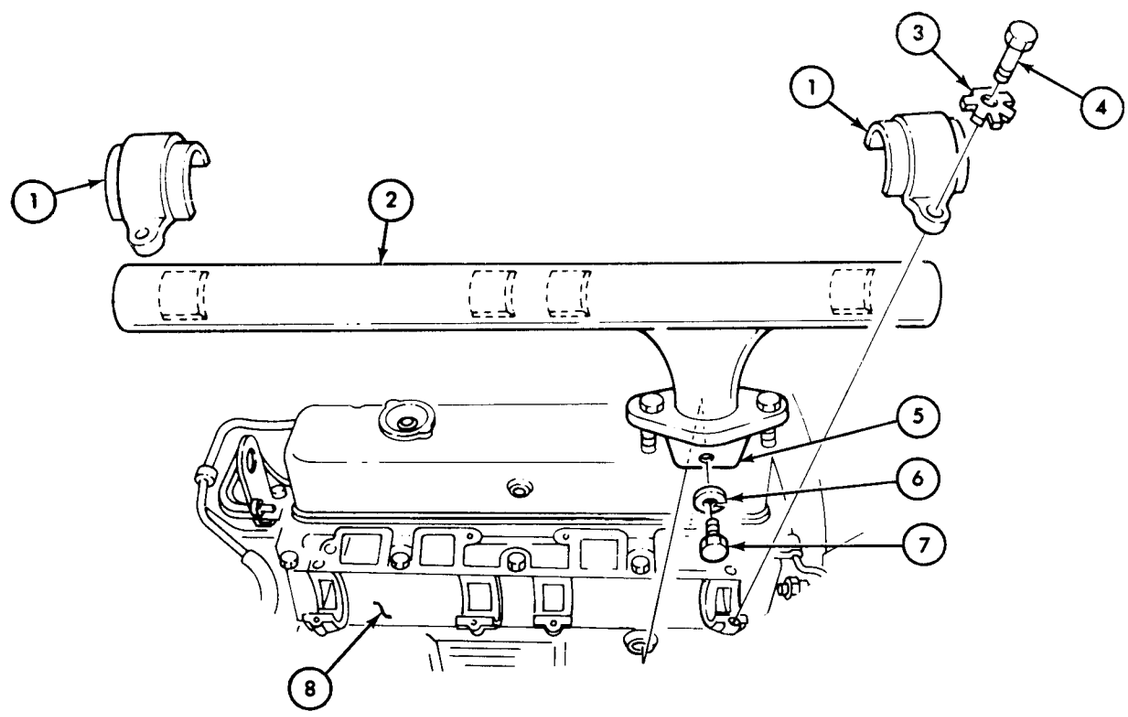

TA 156960

3-14. Removal of External Engine Components (Cont'd)

STEP NO.	LOCATION	ITEM	ACTION	REMARKS
e. WATER PUMP, FAN, AND PULLEY				
24.	Radiator fan blade (9) to water pump hub (13)	Four capscrews (10) and lockwashers (11)	Remove.	Discard lockwashers (11).
25.		Radiator fan blade (9) and fan pulley (12)	Remove from water pump hub (13).	
26.	Water pump (16) to cylinder block (14)	Three capscrews (17)	Remove.	
27.		Water pump (16) and gasket (15)	Remove from cylinder block (14).	Discard gasket (15).

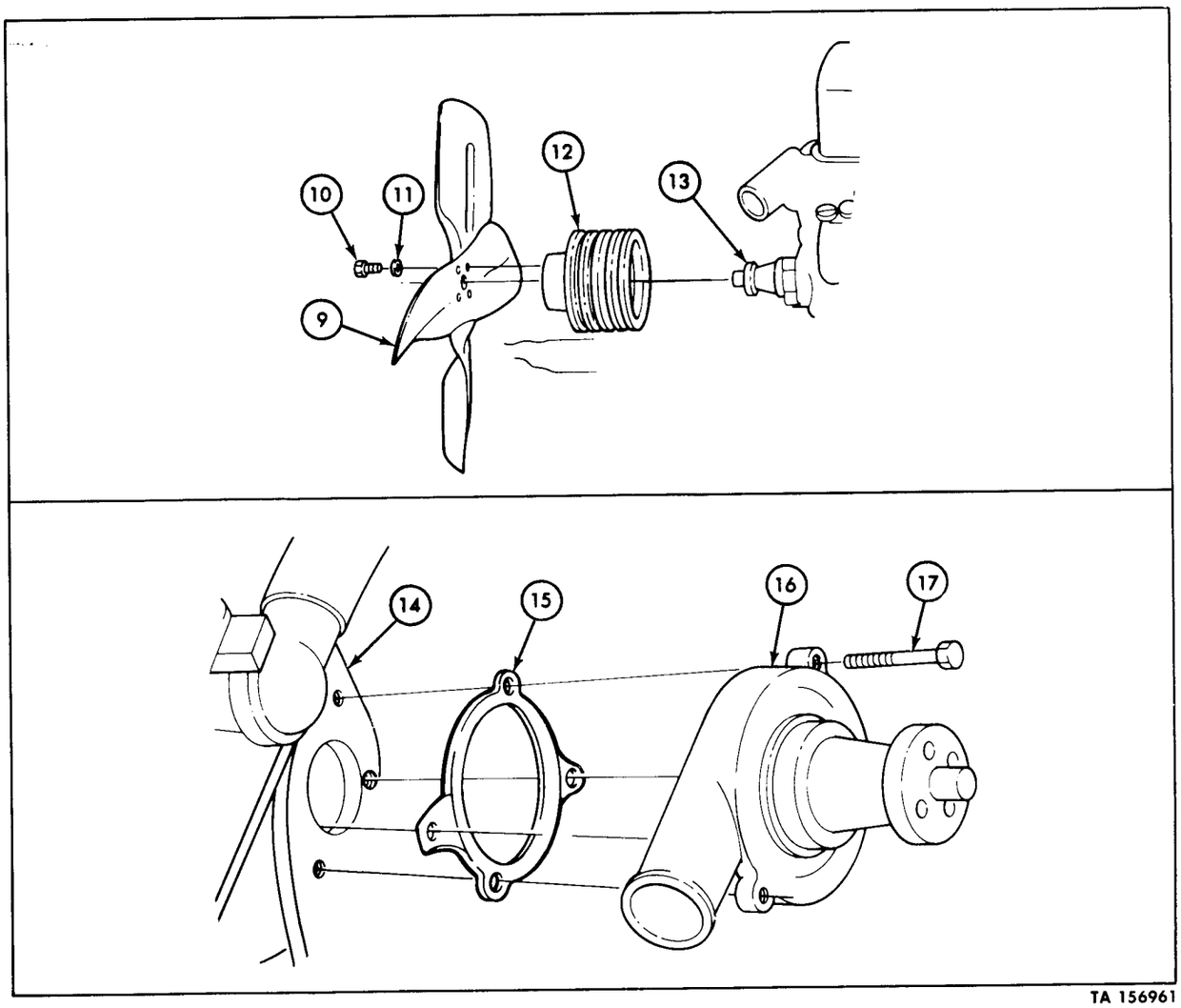

TA 156961

3-14. Removal of External Engine Components (Cont'd)

STEP NO.	LOCATION	ITEM	ACTION	REMARKS
	f. THERMOSTAT			
28.	Thermostat housing (4) to cylinder head (1)	Two capscrew-assembled lockwashers (5)	Remove.	
29.		Thermostat housing (4) and gasket (3)	Remove from cylinder head (1).	Discard gasket (3).
30.		Thermostat (2)	Remove from cylinder head (1).	

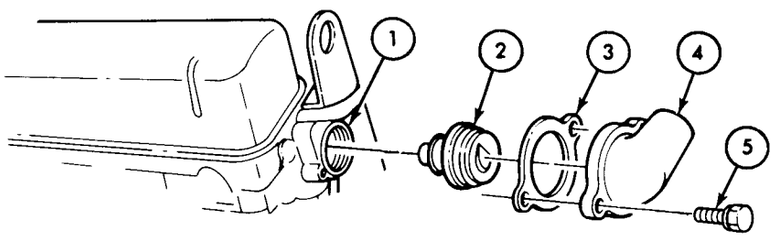

	g. ROCKER ARM COVER			
31.	Rocker arm cover (7) to cylinder head (1)	Two nuts (10), retainers (9), and seals (8)	Remove.	Discard seals (8).
32.		Rocker arm cover (7) and gasket (6)	Remove from cylinder head (1).	Discard gasket (6).

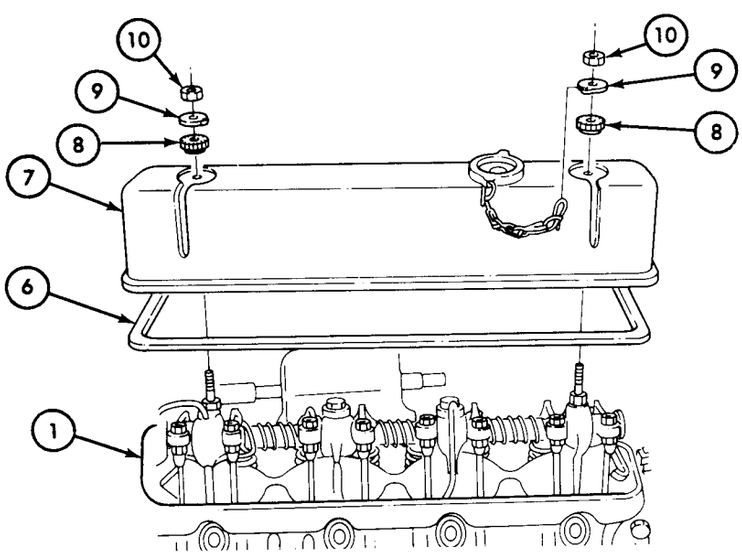

TA 156962

3-14. Removal of External Engine Components (Cont'd)

STEP NO.	LOCATION	ITEM	ACTION	REMARKS
h. FUEL PUMP				
33.	Fuel pump (11)	Fuel outlet tube (14)	Disconnect.	
34.	Ventilation line (15) to fuel pump (11)	Hose clamp (16)	Loosen and remove ventilation line (15) from fuel pump (11).	
35.	Fuel pump (11) to cylinder block (12)	Two capscrews (19), star lockwashers (18), and flat washers (17)	Remove.	Discard star lockwashers (18).
36.		Fuel pump (11) and gasket (13)	Remove from cylinder block (12).	Discard gasket (13).

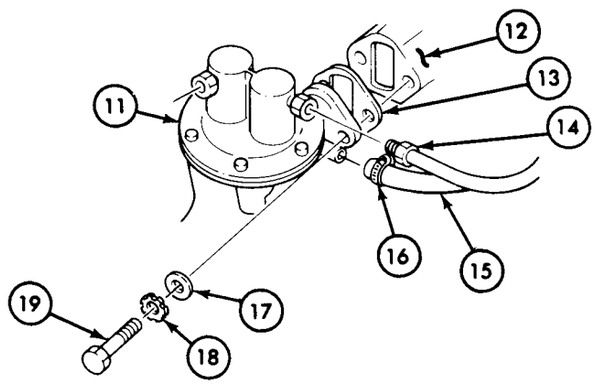

i. OIL FILTER

NOTE

Place drain pan under filter (21) to catch oil.

37.	Oil filter adapter (20)	Oil filter (21)	Unscrew and remove.

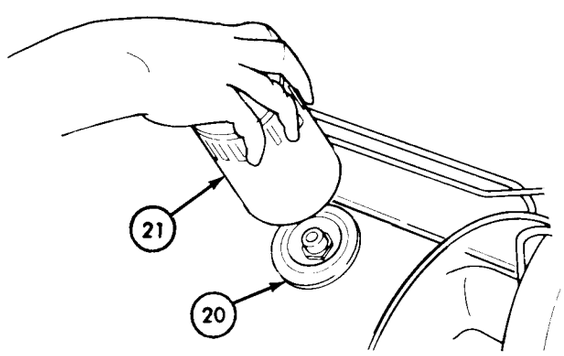

TA 156963

3-14. Removal of External Engine Components (Cont'd)

STEP NO.	LOCATION	ITEM	ACTION	REMARKS
j. OIL PRESSURE TRANSMITTER				
38.	Rear of oil filter adapter (2)	Oil pressure transmitter (1)	Unscrew and remove.	

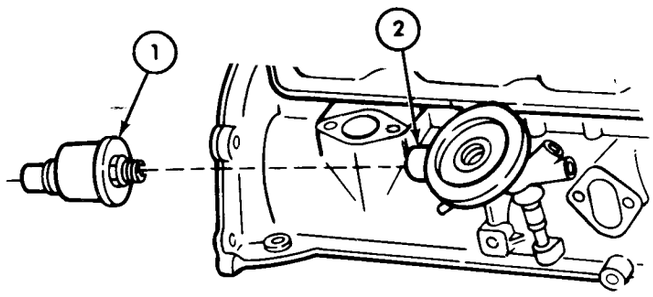

k. RIGHT ENGINE MOUNTING BRACKET				
39.	Right mounting bracket (5) to cylinder block (6)	Two bolts (3) and lockwashers (4)	Remove.	Discard lockwashers (4).
40.		Right mounting bracket (5)	Remove from cylinder block (6).	

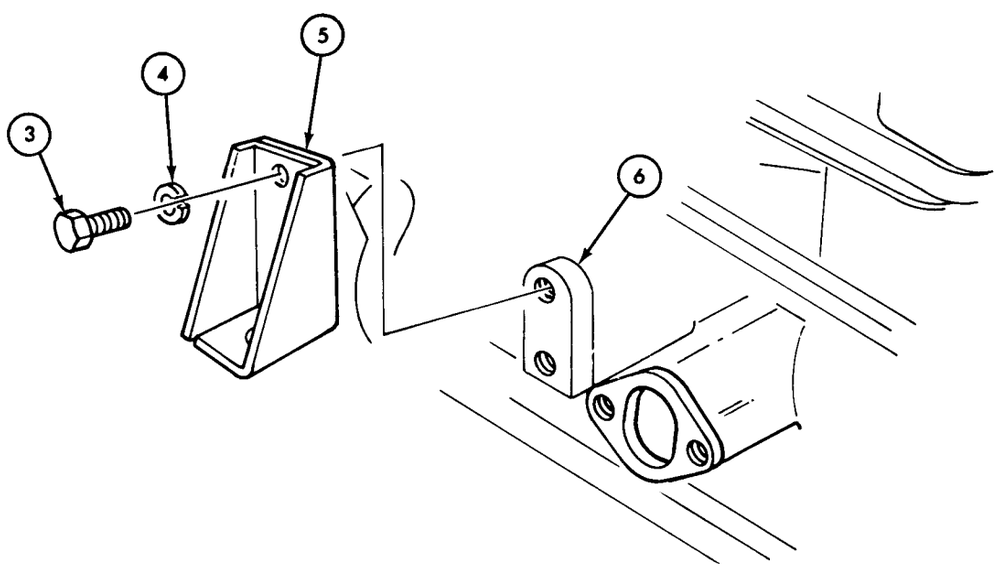

TA 156964

3-14. Removal of External Engine Components (Cont'd)

STEP NO.	LOCATION	ITEM	ACTION	REMARKS
I. DISTRIBUTOR				
41.	Distributor cover (7)	Four spark plug cables (8)	Unscrew cable nuts (9) and disconnect.	Tag for proper spark plug cable (8) identification.
42.	Distributor assembly (10)	Two vent hoses (11)	Loosen two clamps (12) and disconnect.	Note location of hoses (11) for installation.
43.	Distributor assembly (10) to cylinder block (6)	Two mounting screws (13) and lockwashers (14)	Remove.	Discard lockwashers (14).
44.		Distributor assembly (10)	Lift out from cylinder block (6).	
45.	Distributor assembly (10)	"O" ring (15)	Remove.	Discard "O" ring (15).
46.		Intermediate distributor drive shaft (16)	Lift up and remove from cylinder block (6).	

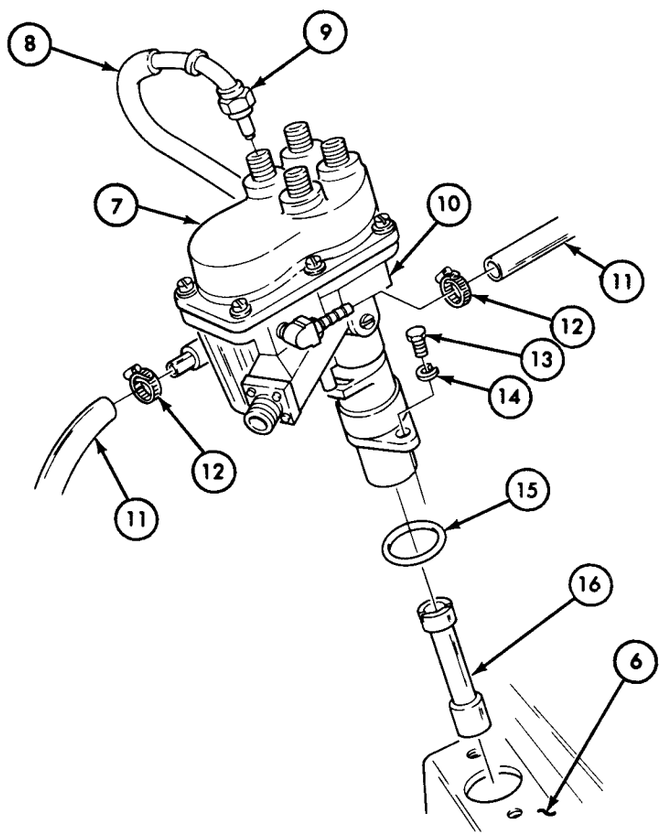

TA 156965

3-14. Removal of External Engine Components (Cont'd)

STEP NO.	LOCATION	ITEM	ACTION	REMARKS
	m. SPARK PLUGS			
47.	Four spark plugs (3)	Four spark plug cables (1)	Unscrew cable nut (2) and disconnect.	Tag cables (1) for identification.
48.	Cylinder head (5)	Four spark plugs (3) and gaskets (4)	Remove.	Discard gaskets (4).

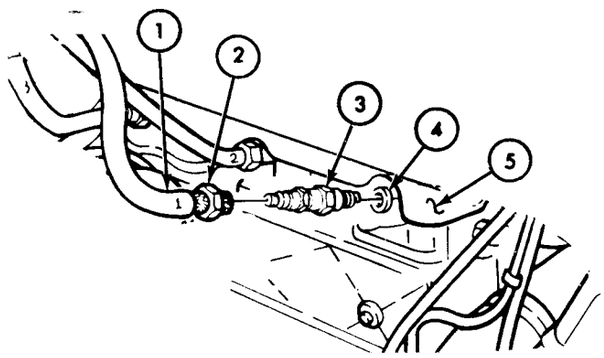

	n. FUEL LINE			
49.	Fuel line clamp (7) to bracket (6)	Capscrew (8), lockwasher (11), and nut (10)	Remove.	Discard lockwasher (11).
50.		Fuel line clamp (7) and fuel line (9)	Remove from bracket (6).	

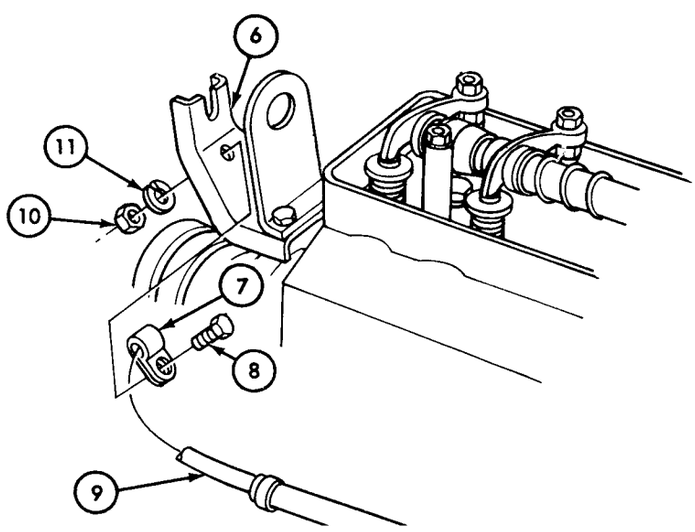

TA 156966

3-14. Removal of External Engine Components (Cont'd)

STEP NO.	LOCATION	ITEM	ACTION	REMARKS
	o. COOLANT TEMPERATURE SENDING UNIT			
51.	Rear of cylinder head (5)	Coolant temperature sending unit (12)	Unscrew and remove.	

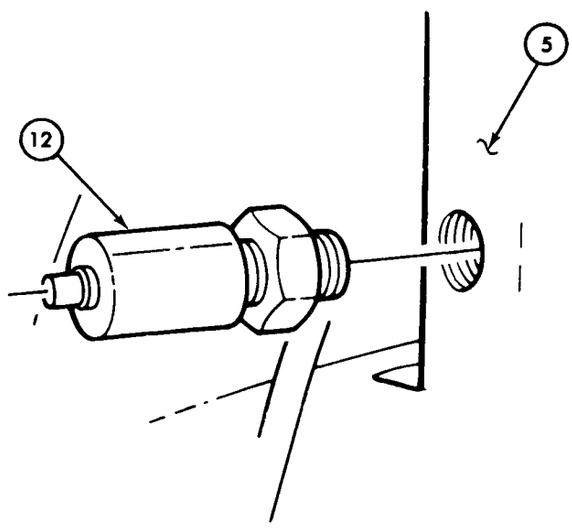

END OF TASK!

TA 156967

3-15. Disassembly of Engine into Subassemblies

This task covers:

a. Cylinder Head
b. Oil Pan
c. Oil Pump and Strainer Assembly
d. Pistons and Connecting Rods
e. Crankshaft Pulley
f. Timing Gear Cover and Crankshaft Oil Slinger
g. Flywheel and Clutch Pilot Bearing
h. Crankshaft and Main Bearings
i. Camshaft and Tappets
j. Oil Filter Adapter

INITIAL SETUP:

Applicable Models
All

Equipment Condition Reference	Condition Description
Para 3-11	Engine installed on support stand.
Para 3-19	Exterior of engine cleaned.

Test Equipment
Dial indicator assembly

Special Tools
Cylinder ring ridge remover
Crankshaft pulley puller
Crankshaft and camshaft gear puller

Special Environmental Conditions
Clean, well-ventilated work area.

Materials/Parts
None

Personnel Required
One mechanic

General Safety Instructions
None

Manual References
TM 9-2320-218-34P

STEP NO.	LOCATION	ITEM	ACTION	REMARKS
	a. CYLINDER HEAD			
1.	Rocker arm shaft assembly (1)	Eight self-locking valve adjusting screws (3)	Back off one turn on each screw (3).	Reduces load on rocker arm (2).

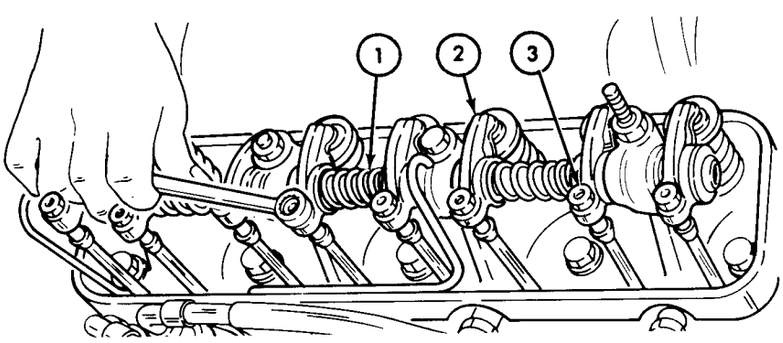

TA 156968

3-15. Disassembly of Engine into Subassemblies (Cont'd)

STEP NO.	LOCATION	ITEM	ACTION	REMARKS
2.	Rocker arm shaft assembly (1) to cylinder head (13)	Two retaining nuts (8), two capscrews (9), four lockwashers (7), two flat washers (10), and two oil tube brackets (6)	Remove.	Discard lockwashers (7).
3.		Center oil outlet tube (12)	Remove from cylinder head (13) and rocker arm shaft assembly (1).	
4.		Inlet oil tube (5) and "O" ring seal (4)	Remove from cylinder head (13) and rocker arm shaft assembly (1).	Discard "O" ring seal (4).
5.		Rocker arm shaft assembly (1)	Remove by sliding up and off support studs (11).	

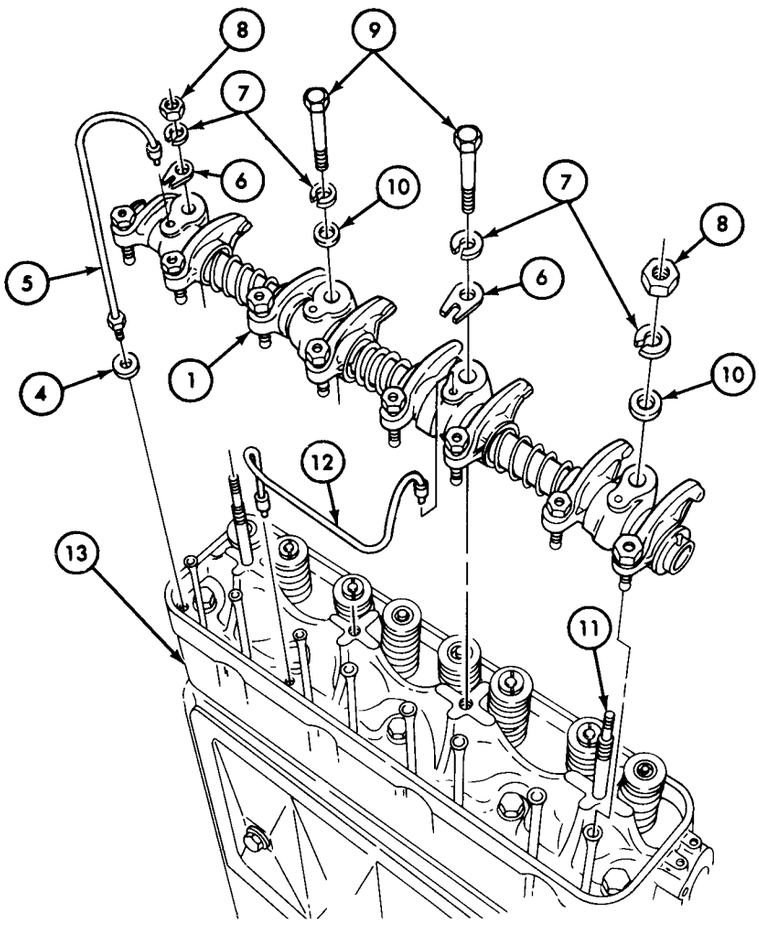

TA 156969

3-15. Disassembly of Engine into Subassemblies (Cont'd)

STEP NO.	LOCATION	ITEM	ACTION	REMARKS
6.	Cylinder head (1)	Eight push rods (4)	Remove.	Identify for installation purposes.
7.	Exhaust valves (3)	Four exhaust valve caps (2)	Remove.	Identify for installation purposes.

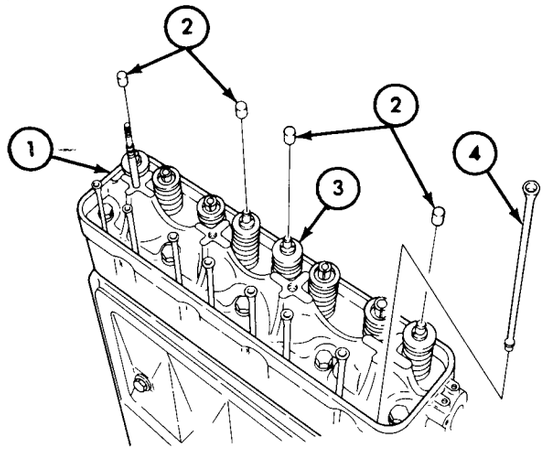

8.	Cylinder head (1) to cylinder block (7)	Ten capscrews (5)	Remove.	

CAUTION

To avoid damage to gasket surfaces, do not pry between cylinder head (1) and block (7).

9.		Cylinder head (1) and gasket (6)	Remove from cylinder block (7).	Discard gasket (6).

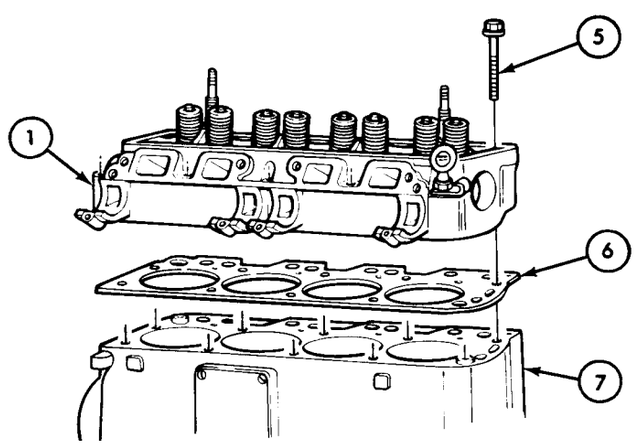

TA 156970

3-15. Disassembly of Engine into Subassemblies (Cont'd)

STEP NO.	LOCATION	ITEM	ACTION	REMARKS
b. OIL PAN				
10.	Oil pan (10) to cylinder block (7)	Twelve pan head screws (13), lockwashers (14), and flat washers (15)	Remove.	Discard lockwashers (14).
11.	Oil pan (10) to cylinder block (7)	Four capscrews (12) and flat washers (11)	Remove.	
12.		Oil pan (10), two gaskets (8) and (16), and two seals (9) and (17)	Remove from cylinder block (7).	Discard gaskets (8) and (16), and seals (9) and (17).

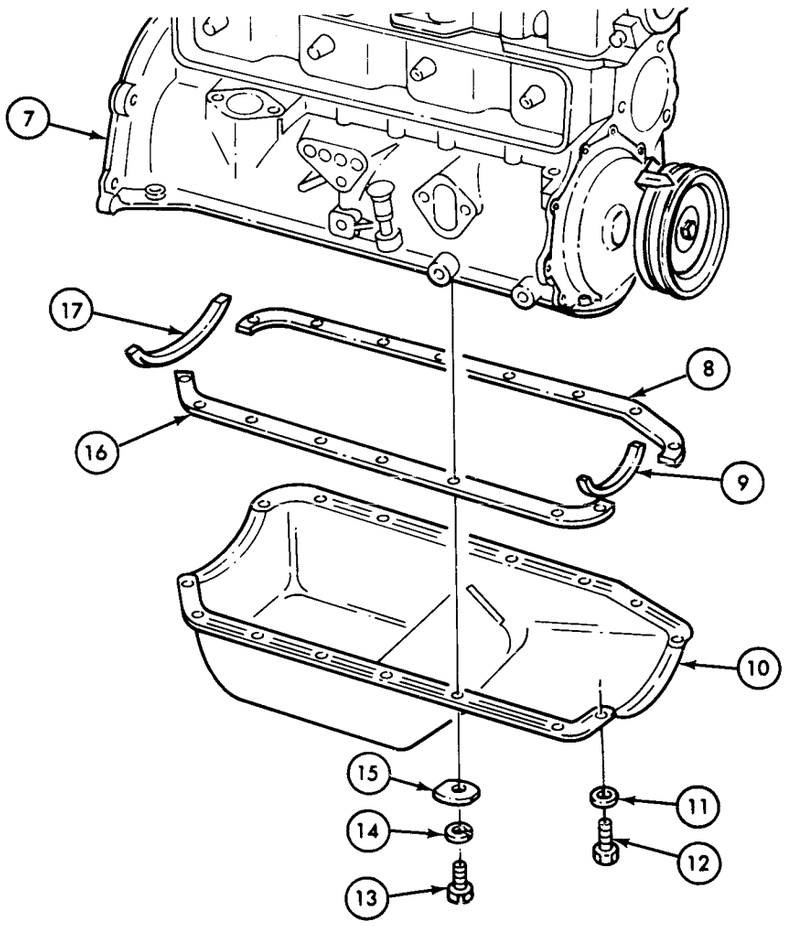

TA 156971

3-15. Disassembly of Engine into Subassemblies (Cont'd)

STEP NO.	LOCATION	ITEM	ACTION	REMARKS
	c. OIL PUMP AND STRAINER ASSEMBLY			
13.	Oil pump assembly (8) to cylinder block (7)	Long pump bolt (1), short pump bolt (2), two star lockwashers (3), and two flat washers (4)	Remove.	Long bolt (1) goes through oil pump strainer assembly flange (5). Discard star lockwashers (3).
14.		Oil pump assembly (8) and gasket (6)	Remove from cylinder block (7).	Discard gasket (6).
15.	Oil pump strainer assembly (9) to oil pump base (12)	Bolt-assembled lock-washer (10)	Remove.	
16.		Oil pump strainer assembly (9) and gasket (11)	Remove from oil pump body (12).	Discard gasket (11).

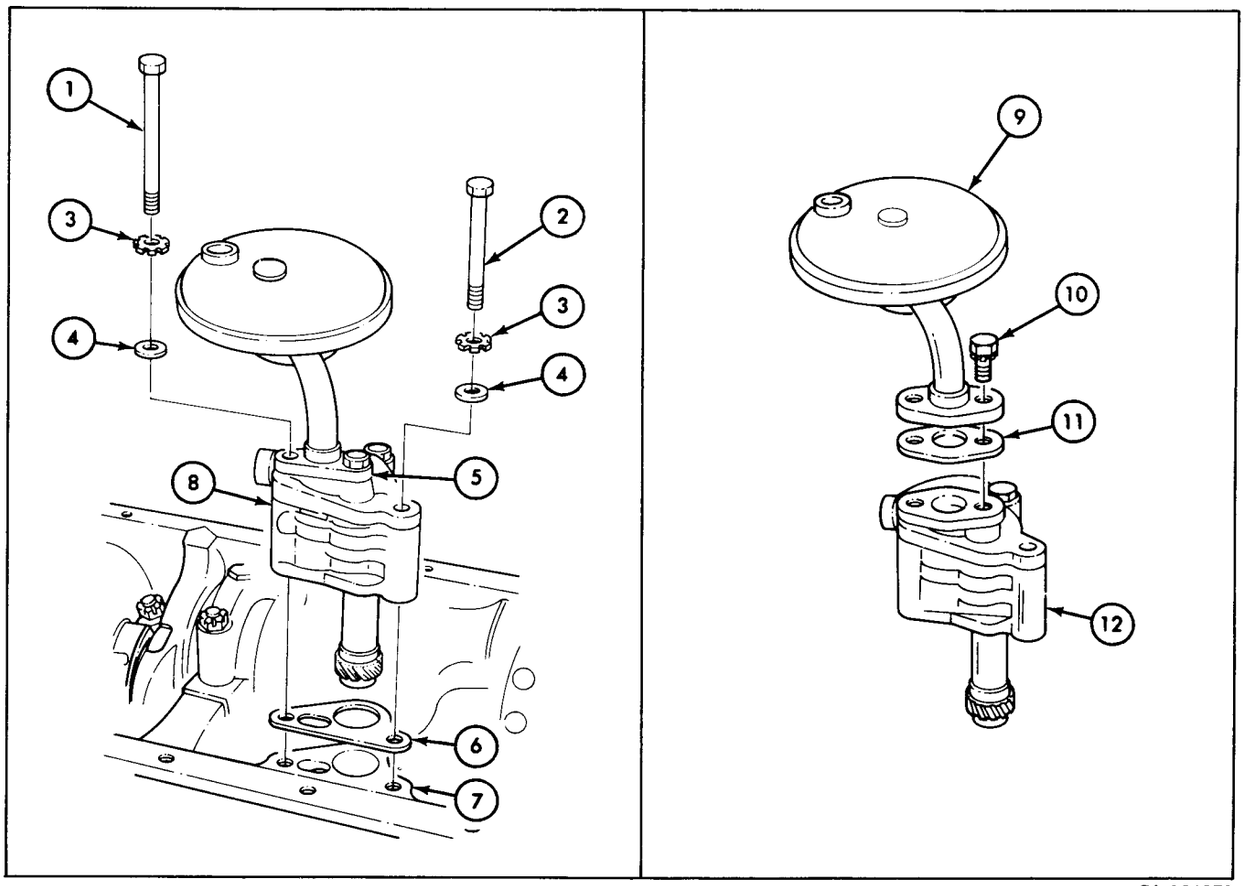

TA 156972

3-15. Disassembly of Engine into Subassemblies (Cont'd)

STEP NO.	LOCATION	ITEM	ACTION	REMARKS
	d. PISTONS AND CONNECTING RODS			
		CAUTION • Top cylinder ring ridge (15) must be removed before removing piston and rod assembly from cylinder block (13). Ridge (15) is removed to permit removal of piston. • Do not cut into "ring travel" portion (16) of cylinder (14).		
17.	Cylinder block (13)	Ring ridge (15)	Remove from cylinder wall (14).	Use ring ridge remover. Remove all four ring ridges (15) using the same procedure.
18.	Connecting rod cap (18) to connecting rod (21)	Two connecting rod locknuts (19)	Remove.	Make sure connecting rod (21) is at bottom of stroke.
19.		Connecting rod cap (18) and lower bearing half (17)	*a.* Loosen. *b.* Slide evenly off bolts (20) and remove.	Tap lightly using small mallet. Connecting rod caps (18) are marked as matched sets. Discard lower bearing half (17). Remove all four connecting rod caps (18) and bearing halves (17) using the same procedure.

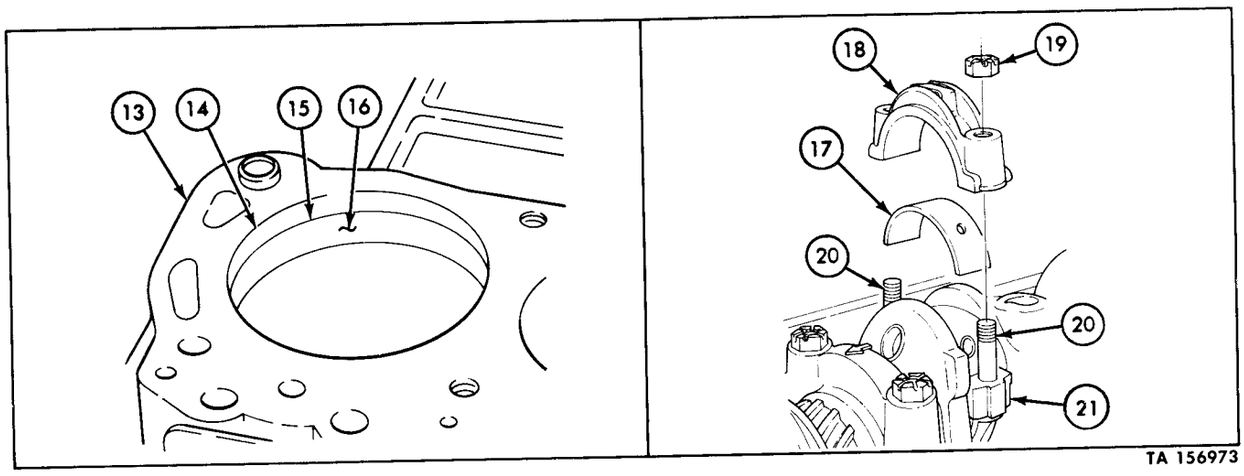

TA 156973

3-15. Disassembly of Engine into Subassemblies (Cont'd)

STEP NO.	LOCATION	ITEM	ACTION	REMARKS
		CAUTION		
		Use care not to damage crankpin or cylinder wall when removing piston and connecting rod assembly (1).		
20.	Cylinder block (2)	Piston and connecting rod assembly (1)	*a.* Remove. *b.* Reinstall connecting rod cap (3) and two nuts (4).	Discard upper bearing half (5). Remove all four piston and connecting rod assemblies (1) using the same procedure. Identify piston and rod assemblies (1) to corresponding cylinder bore.

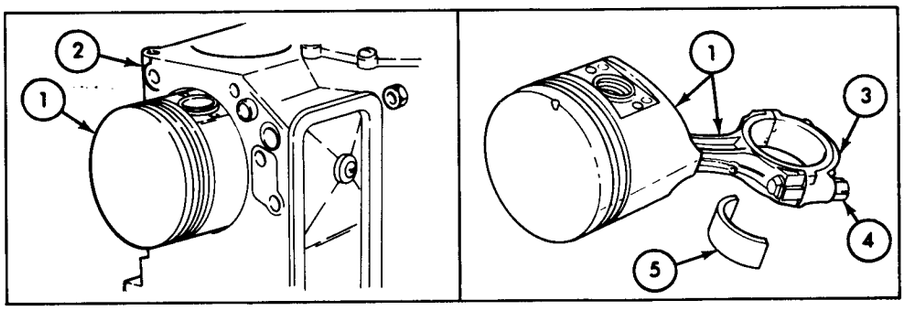

e. CRANKSHAFT PULLEY

21.	Crankshaft pulley (6) to crankshaft (9)	Retaining bolt (8) and washer (7)	Remove.	
		CAUTION		
		Install pulley retaining bolt (8) in crankshaft (9) when using puller to prevent damage to crankshaft threads. Remove bolt (8) when pulley (6) has been removed.		
22.		Crankshaft pulley (6)	Remove from crankshaft (9).	Use puller.

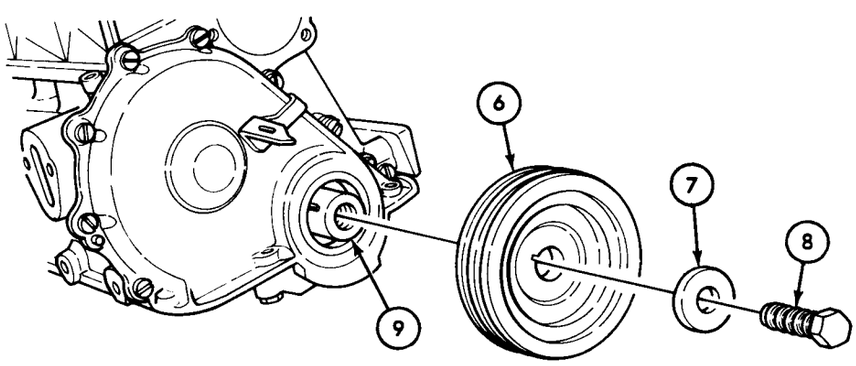

TA 156974

3-15. Disassembly of Engine into Subassemblies (Cont'd)

STEP NO.	LOCATION	ITEM	ACTION	REMARKS
	f. TIMING GEAR COVER AND CRANKSHAFT OIL SLINGER			
23.	Timing gear cover (11) to cylinder block (15)	Eight pan head screws (14), star lockwashers (13), and flat washers (12)	Remove.	Discard star lockwashers (13).
24.		Timing gear cover (11) and gasket (10)	Remove from cylinder block (15).	Discard gasket (10).

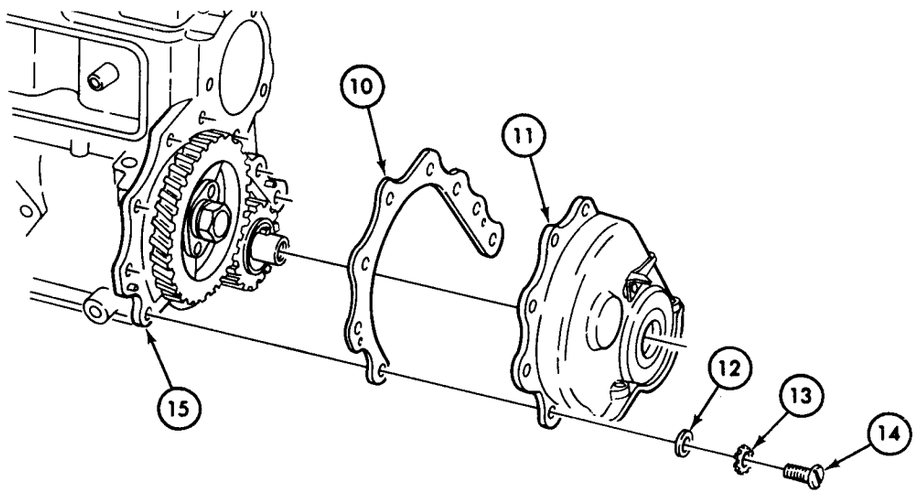

25.	Crankshaft gear (16)	Slinger (17)	Remove.	

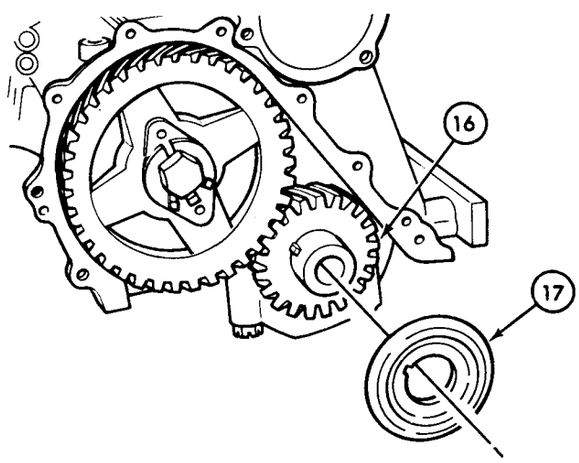

TA 156975

3-15. Disassembly of Engine into Subassemblies (Cont'd)

STEP NO.	LOCATION	ITEM	ACTION	REMARKS
26.		Camshaft timing gear (7)	Measure backlash (3) as follows:	
			a. Mount dial indicator assembly (1) to cylinder block (2).	
			b. Place indicator tip (6) at right angles to helical gear tooth (5).	
			c. Move camshaft gear (7) fully clockwise.	
			d. "Zero" dial indicator (8).	
			e. Move camshaft gear (7) fully counter-clockwise.	Hold camshaft gear (7) down while measuring backlash (3).
			f. Observe backlash (3) between camshaft gear (7) and crankshaft gear (4) and record reading.	Backlash is 0.0025-0.0057 in. (.06-.15 mm).
27.		Camshaft timing gear (7)	Measure timing gear runout (9) as follows:	
			a. Mount dial indicator assembly (1) on cylinder block (2).	
			b. Place indicator tip (6) against camshaft gear (7).	
			c. "Zero" dial indicator (8).	
			d. Rotate gear (7) one full turn, and observe runout (9), and record reading.	Total indicated runout (TIR) is .006 in. (.1524 mm).

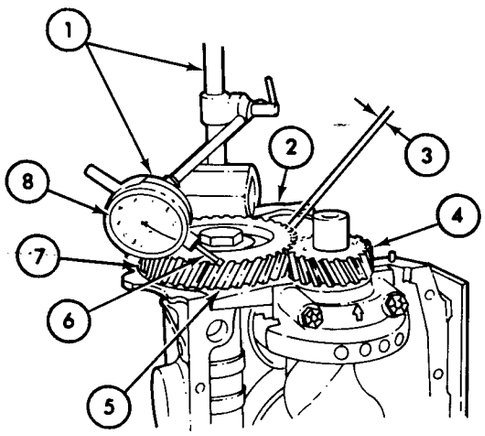

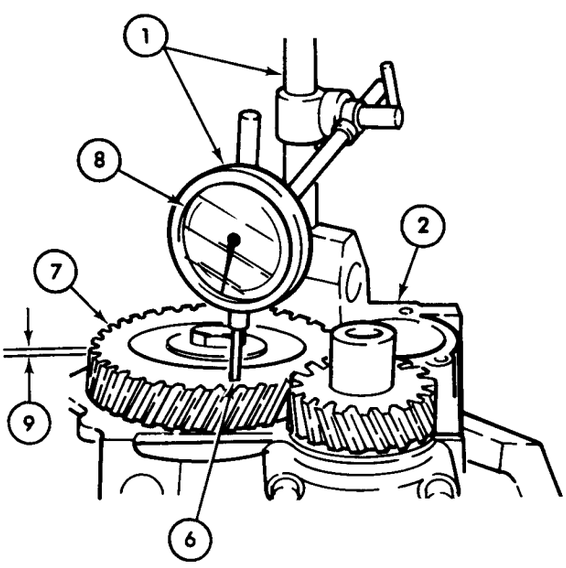

TA 156976

3-15. Disassembly of Engine into Subassemblies (Cont'd)

STEP NO.	LOCATION	ITEM	ACTION	REMARKS
28.		Camshaft (7)	Measure camshaft end play (10) as follows:	
			a. Mount dial indicator assembly (1) on cylinder block (2).	
			b. Place indicator tip (6) on end of camshaft retaining bolt (11).	
			c. "Zero" dial indicator (8).	
			d. Move camshaft (7) up to limit of play (10), observe dial indicator (8), and record reading.	Camshaft end play (10) is .003-.006 in. (.0762-.1524 mm).

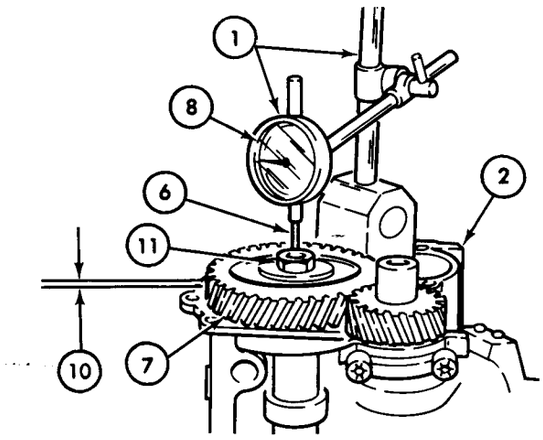

CAUTION

Failure to install bolt (13) will result in damage to threads in end of crankshaft (12).

29.	Crankshaft (12)	Crankshaft gear (4)	*a.* Install pulley retaining bolt (13) in crankshaft (12).	
			b. Remove gear (4).	Use crankshaft gear puller (14).
			c. Remove bolt (13) from end of crankshaft (12).	

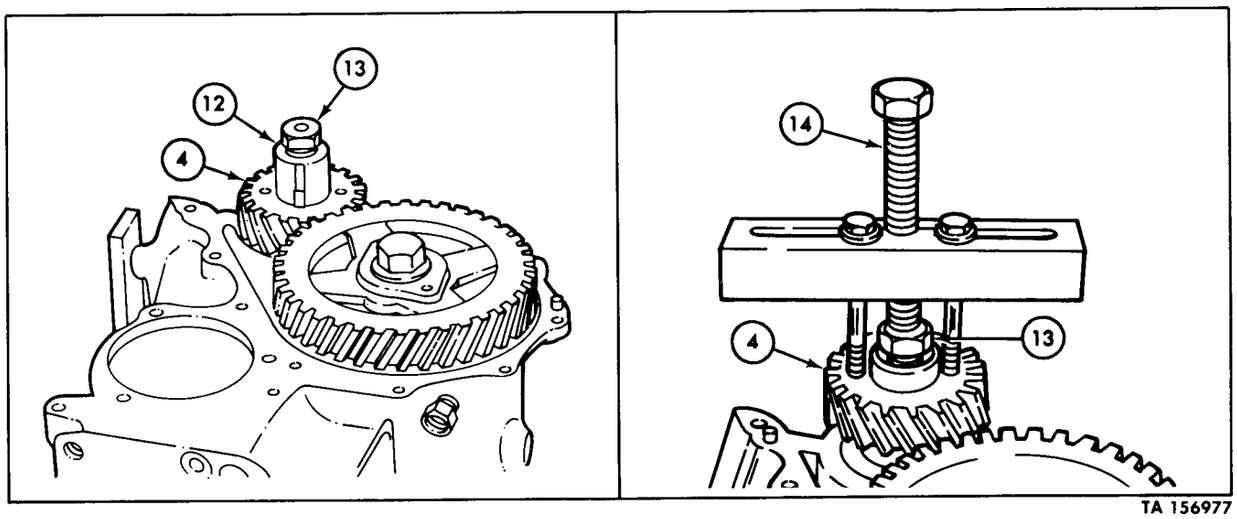

TA 156977

3-15. Disassembly of Engine into Subassemblies (Cont'd)

STEP NO.	LOCATION	ITEM	ACTION	REMARKS
30.		Woodruff key (1)	Remove from crankshaft (2).	Use pliers or small drift punch.
31.	Camshaft gear (3) to camshaft (7)	Retaining bolt (4), locking tab (5), and washer (6)	*a.* Straighten locking tab (5).	
			b. Remove.	Discard locking tab (5).

CAUTION

Failure to install bolt (4) could result in damage to threads in end of camshaft (7).

32.		Retaining bolt (4)	Install in camshaft (7).	
33.		Camshaft gear (3)	Remove from camshaft (7)	Use camshaft gear puller (8).
				Install punch (9) to stop camshaft gear (3) from turning.
34.		Retaining bolt (4)	Remove from camshaft (7).	

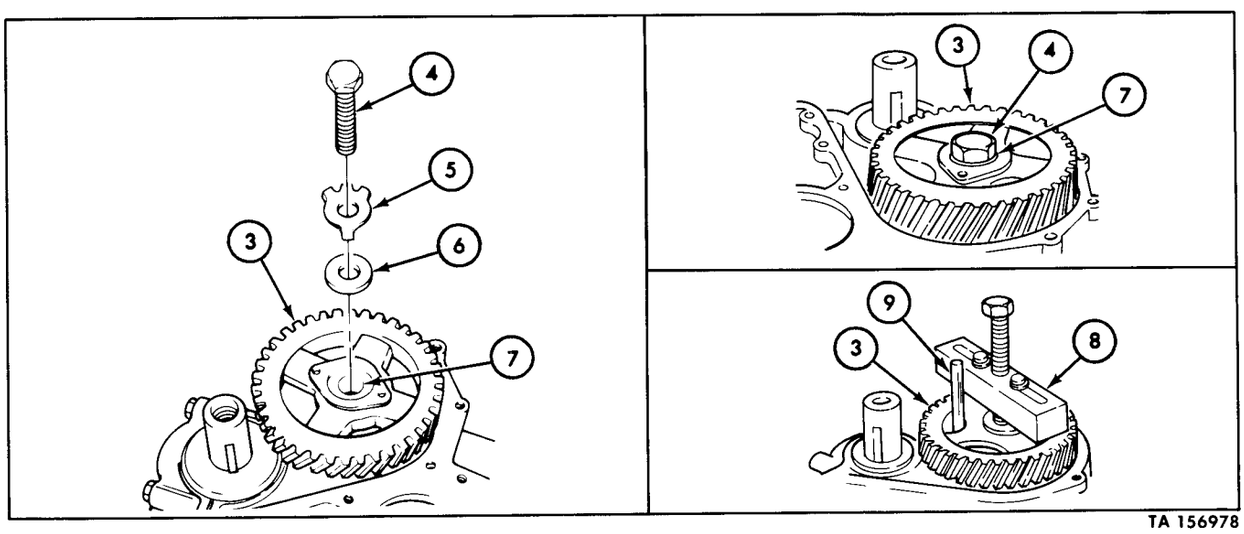

TA 156978

3-15. Disassembly of Engine into Subassemblies (Cont'd)

STEP NO.	LOCATION	ITEM	ACTION	REMARKS
	g. FLYWHEEL AND CLUTCH PILOT BEARING			
35.	Flywheel (10) to crankshaft (2)	Six bolts (12)	Remove.	
36.		Flywheel (10)	Remove from crankshaft (2).	Tap lightly with mallet.
37.		Clutch pilot bearing (11)	Remove from flywheel (10).	

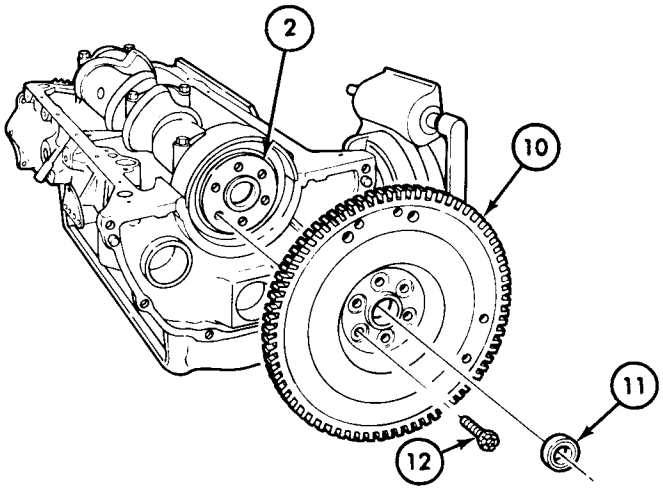

	h. CRANKSHAFT AND MAIN BEARINGS			
38.		Crankshaft (2)	Measure crankshaft end play (16) as follows:	
			a. Mount dial indicator assembly (14) on block (15).	
			b. Place indicator tip (17) against end of crankshaft (2).	
			c. "Zero" dial indicator (13).	
			d. Move crankshaft (2) to limits of play (16), observe dial indicator (13), and record reading.	End play (16) is .004-.008 in. (.1016-.2032 mm).

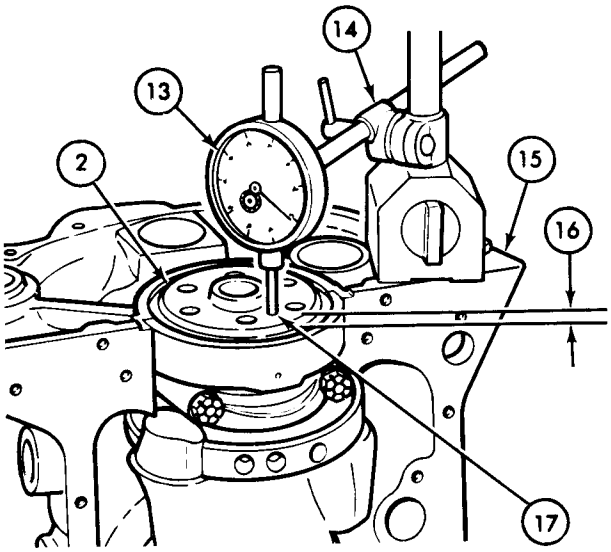

TA 156979

3-15. Disassembly of Engine into Subassemblies (Cont'd)

STEP NO.	LOCATION	ITEM	ACTION	REMARKS
39.	Three main bearing caps (1) to cylinder block (4)	Six capscrews (2)	Remove.	Center main bearing is thrust bearing.
40.		Three main bearing caps (1)	Remove from cylinder block (4).	
41.	Three main bearing caps (1)	Lower main bearing inserts (3)	Remove.	Discard bearing inserts (3).
42.	Rear main bearing cap (1)	Four side seals (5)	Remove.	Discard seals (5).
43.	Crankshaft (6)	Rear oil seal (7)	Remove.	Discard seal (7).

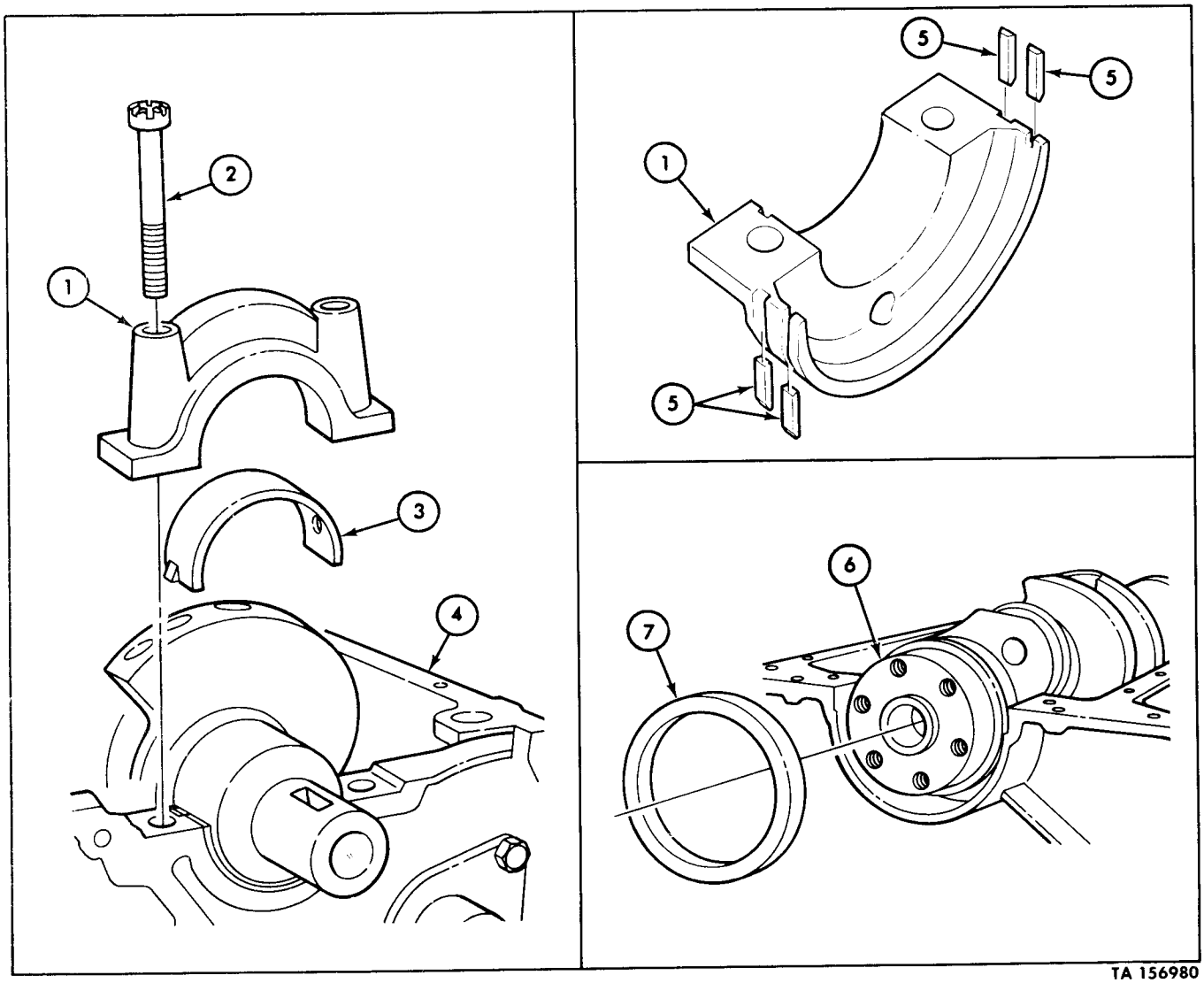

TA 156980

3-15. Disassembly of Engine into Subassemblies (Cont'd)

STEP NO.	LOCATION	ITEM	ACTION	REMARKS
		WARNING Handle crankshaft (6) with care to avoid damage to material and/or injury to personnel.		
44.	Cylinder block (9)	Crankshaft (6)	Lift out carefully from cylinder block (9).	
45.		Three upper main bearing inserts (8)	Remove from cylinder block (9).	Discard bearing inserts (8). Reinstall main bearing caps (1).

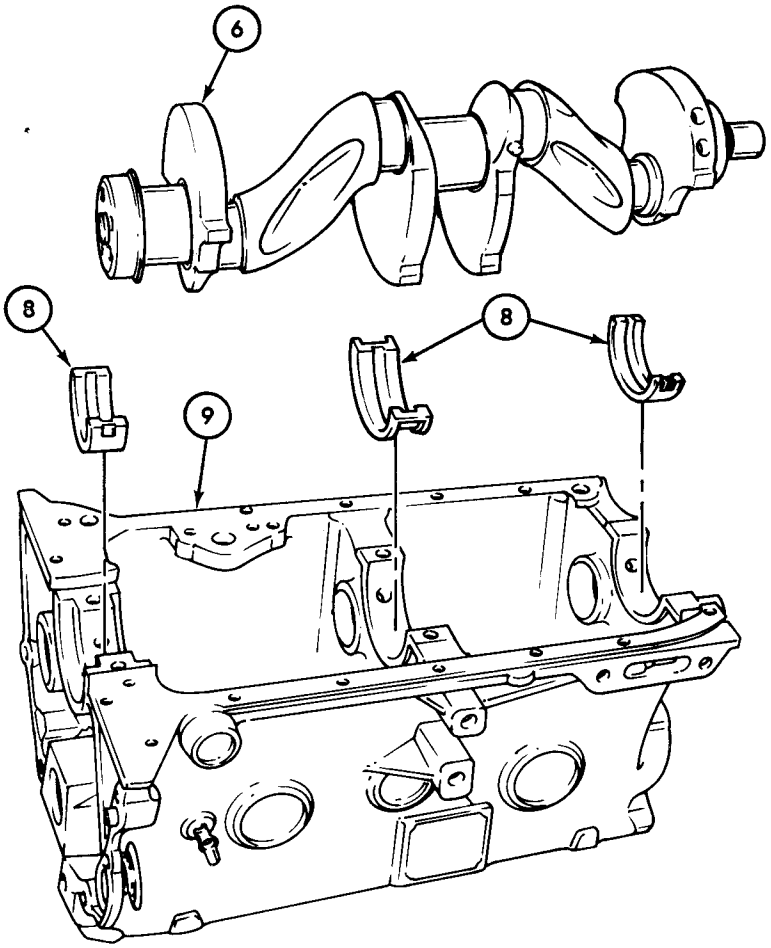

TA 156981

3-15. Disassembly of Engine into Subassemblies (Cont'd)

STEP NO.	LOCATION	ITEM	ACTION	REMARKS
i. CAMSHAFT AND TAPPETS				
46.	Camshaft thrust plate (1) to cylinder block (3)	Two capscrew-assembled lockwashers (2)	Remove.	
47.		Thrust plate (1)	Remove from cylinder block (3).	

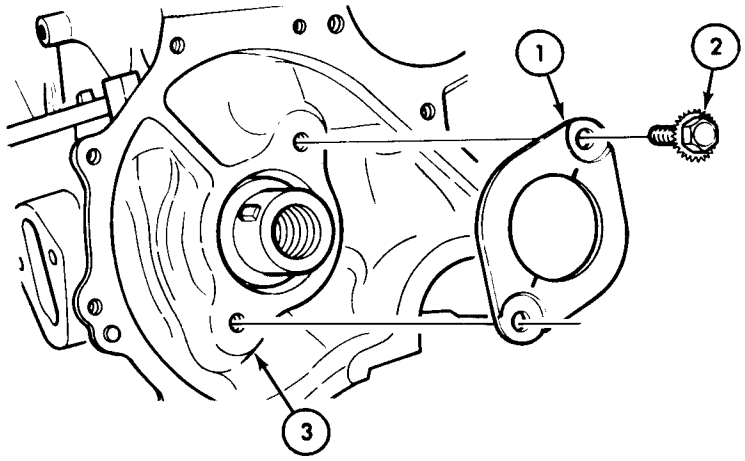

48.	Cylinder block (3)	Camshaft (5)	Remove.	Use care not to damage camshaft (5) or block (3).
49.		Eight valve tappets (4)	Lift out to remove from cylinder block (3).	

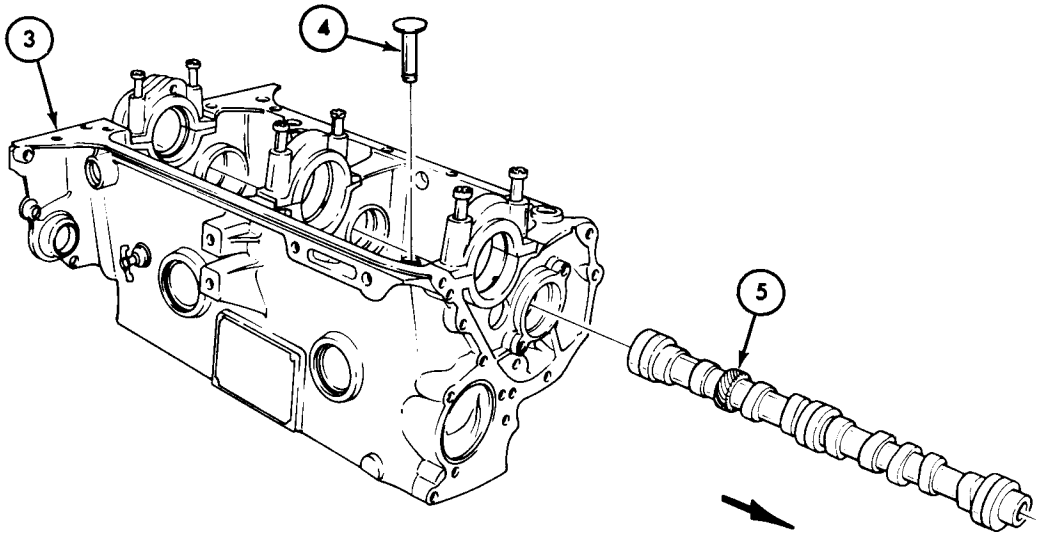

TA 156982

3-15. Disassembly of Engine into Subassemblies (Cont'd)

STEP NO.	LOCATION	ITEM	ACTION	REMARKS
50.	Valve push rod cover (6)	Three screws (9) and seals (8)	Remove.	Discard seals (8).
51.		Valve push rod cover (6) and gasket (7)	Remove.	Discard gasket (7).

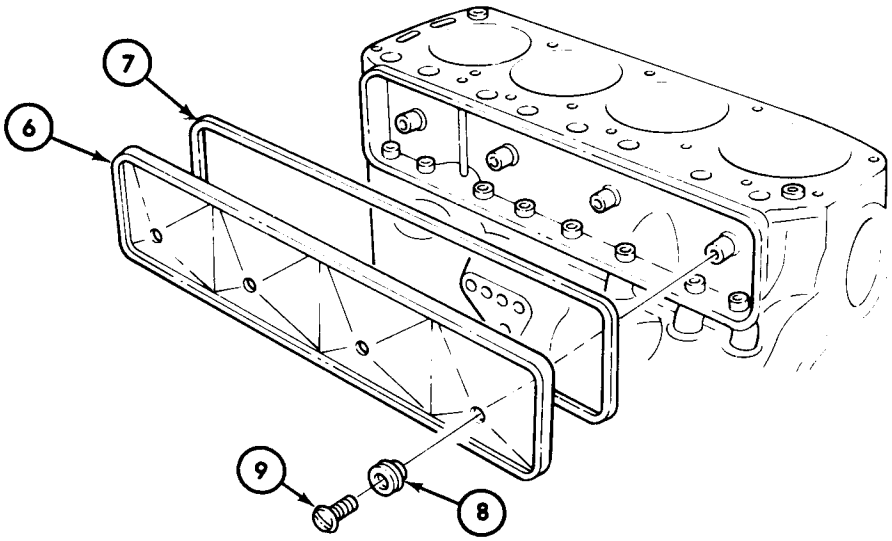

j. OIL FILTER ADAPTER

52.	Oil filter adapter (10)	Two capscrew-assembled lockwashers (13) and two flat washers (12)	Remove.	
53.		Oil filter adapter (10) and gasket (11)	Remove.	Discard gasket (11).

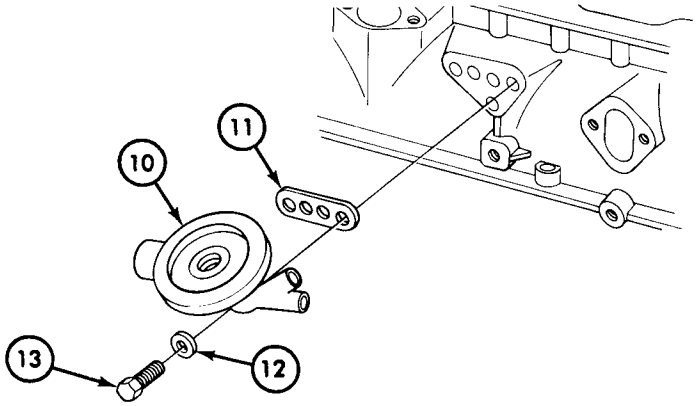

END OF TASK!

TA 156983

3-16. Reassembly of Engine from Subassemblies

This task covers:

a. Crankshaft, Main Bearings, and Seals
b. Valve Tappets and Camshaft
c. Flywheel and Clutch Pilot Bearing
d. Pistons and Connecting Rods
e. Oil Pump and Strainer Assembly
f. Crankshaft Oil Slinger and Timing Gear Cover
g. Crankshaft Pulley
h. Oil Pan
i. Valve Push Rod Cover
j. Cylinder Head
k. Oil Filter Adapter

INITIAL SETUP:

Applicable Models

All

Equipment Condition Reference — **Condition Description**

Para 3-15 — Engine disassembled into subassemblies. All subassemblies in repaired status.

Para 3-9 — Engine block installed on repair stand.

Test Equipment

Dial indicator assembly

Special Tools

Crankshaft rear seal replacer tool
Crankshaft rear seal replacer tool washer
Torque wrench (0-175 lb-ft)

Special Environmental Conditions

Clean, well-ventilated work area.

Materials/Parts

Sealer (NSN 8030-00-543-4384)
OE/HDO oil
GAA grease
Adhesive (NSN 8040-00-290-4301)
Inlet oil tube "O" ring seal
Cylinder head gasket
Two oil pan gaskets
Two oil pan seals
Oil pan drain plug gasket
Oil pump gasket
Oil pump strainer gasket
Timing gear cover gasket
Camshaft gear locking tab
Crankshaft rear main bearing seal
Four rear main bearing cap side seals
Four valve push rod cover seals
Valve push rod cover gasket
Oil filter adapter gasket
Twenty-six lockwashers

Personnel Required

One mechanic

General Safety Instructions

None

Manual References

TM 9-2320-218-34P
LO 9-2320-218-12

3-16. Reassembly of Engine from Subassemblies (Cont'd)

STEP NO.	LOCATION	ITEM	ACTION	REMARKS
a. CRANKSHAFT, MAIN BEARINGS, AND SEALS				
		NOTE • Lubricate all parts with OE/HDO engine oil during assembly. • Only new front and rear main bearings are interchangeable. • Center main bearing is the crankshaft thrust bearing. • All bolts will be tightened evenly during assembly procedures.		
1.		Three upper main bearing inserts (2)	Place into cylinder block (1) with tangs (3) seated in grooves (4).	Make sure bearing inserts (2) are fully seated in block (1).

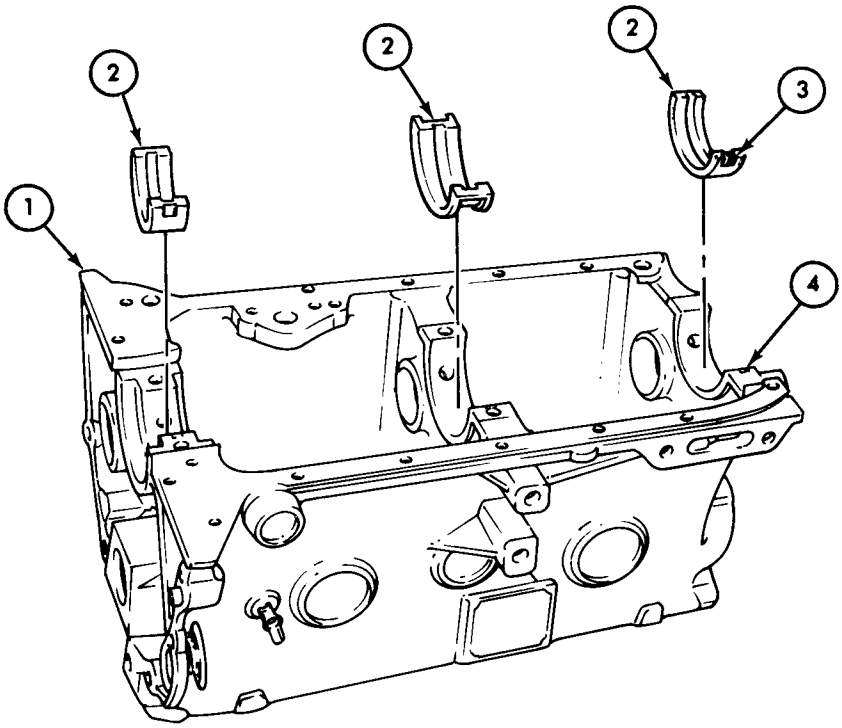

TA 156984

3-16. Reassembly of Engine from Subassemblies (Cont'd)

STEP NO.	LOCATION	ITEM	ACTION	REMARKS
			CAUTION Do not scratch bearing surfaces.	
2.		Crankshaft assembly (2)	*a.* Carefully lower into cylinder block (1).	
			b. Rotate a few times.	This helps in alining crankshaft assembly (2) to bearing inserts (3).

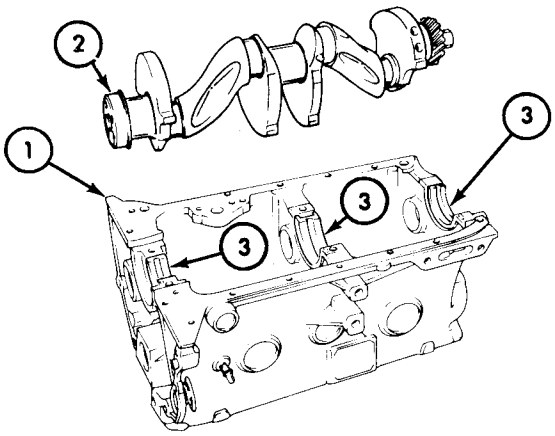

3.		Three lower main bearing inserts (4)	*a.* Place into caps (7) and (8) with tangs (5) seated in grooves (6).	Make sure bearing inserts (4) are fully seated in caps (7) and (8).
			b. Lubricate bearing surfaces.	Use OE/HDO engine oil.
4.		Four new end seals (9)	*a.* Lubricate.	Use GAA grease for retention and ease of installation.
			b. Install with ends flush with rear main bearing cap (8).	

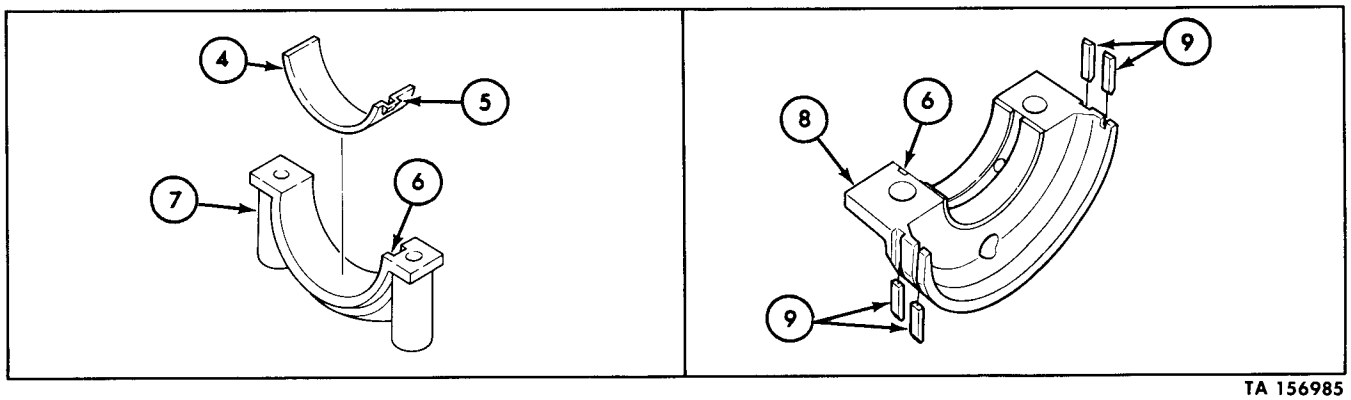

TA 156985

3-16. Reassembly of Engine from Subassemblies (Cont'd)

STEP NO.	LOCATION	ITEM	ACTION	REMARKS
		CAUTION		
		Do not damage rear main bearing cap seals (9) during installation.		
5.		Front main bearing cap (7)	Place over crankshaft assembly (2) and aline with holes in cylinder block (1).	Arrow points to front on all main bearing caps.
6.		Rear main bearing cap (8)	Place over crankshaft assembly (2) and aline with holes in cylinder block (1).	
7.		Crankshaft assembly (2), front main bearing cap (7), and rear main bearing cap (8)	Secure to cylinder block (1) with four bolts (10).	Lubricate bolt (10) threads using OE/HDO oil. Tighten 55-60 lb-ft (75-82 N•m).

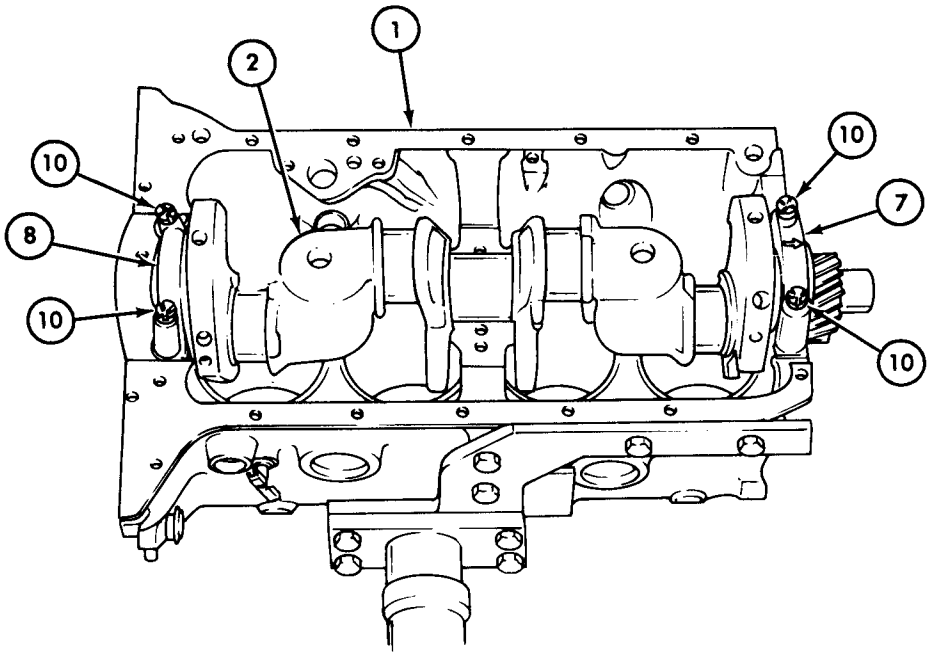

TA 156986

3-16. Reassembly of Engine from Subassemblies (Cont'd)

STEP NO.	LOCATION	ITEM	ACTION	REMARKS
8.		Center main bearing cap (5)	Place over crankshaft (1) and aline with holes in cylinder block (6).	Center main bearing (4) is the crankshaft thrust bearing.
9.		Crankshaft (1) and center main bearing cap (5)	Secure to cylinder block (6) with two bolts (3).	Finger tighten only.
10.		Crankshaft (1)	*a.* Pry forward against thrust surface (2) of upper half of bearing (4).	
			b. Hold crankshaft (1) forward and pry center main bearing cap (5) to rear.	This procedure alines thrust surfaces of both halves of bearing (4).
			c. Hold forward pressure and tighten center main bearing bolts (3).	Tighten bolts (3) 55-60 lb-ft (75-82 N•m).
			d. Rotate crankshaft (1).	Crankshaft (1) must turn freely. Check for binding during rotation.

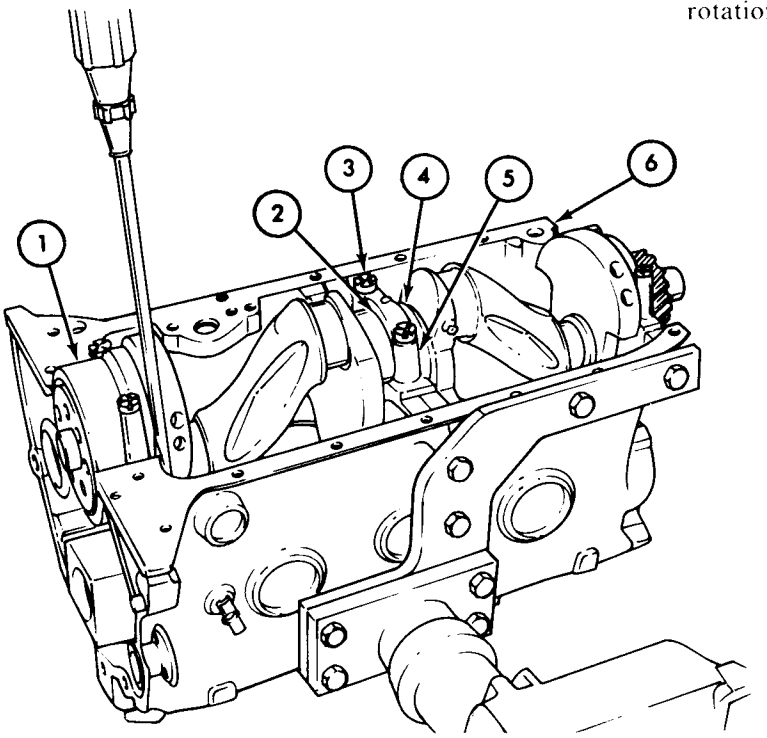

TA 156987

3-16. Reassembly of Engine from Subassemblies (Cont'd)

STEP NO.	LOCATION	ITEM	ACTION	REMARKS

NOTE

Crankshaft end play (9) is controlled by the center main bearing (4).

11.		Crankshaft (1)	Measure end play (9) as follows: *a.* Mount indicator assembly (8) on cylinder block (6). *b.* Place indicator tip (10) on end of crankshaft (1). *c.* "Zero" dial indicator (7). *d.* Move crankshaft (1) to limits of play or travel (9). *e.* Observe end play readings from dial (7).	End play (9) is .004- .008 in. (.1016-.2032 mm). Replace center main bearing (4), crankshaft (1), and/or block (6) if end play (9) is not within limits.

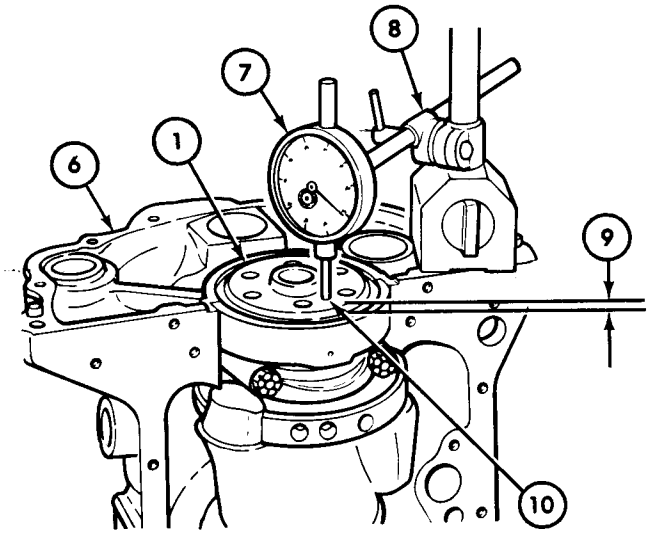

CAUTION

Do not cut seal (12) ends projecting away from main bearing cap (11) towards oil pan.

NOTE

Seal (12) ends are designed to seal against oil pan gasket, flywheel housing cover, and oil pan seal.

12.	Rear main bearing cap (11)	Four side seals (12)	Trim ends flush with seal bore (13).	

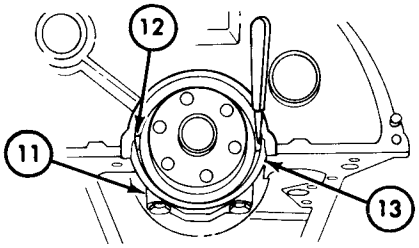

TA 156988

3-16. Reassembly of Engine from Subassemblies (Cont'd)

STEP NO.	LOCATION	ITEM	ACTION	REMARKS
13.		New crankshaft main bearing rear seal (1)	Install as follows:	
			a. Coat outside surface and lip (3) with GAA grease.	
			b. Position on replacer tool washer (2).	Lip (3) of seal (1) should point away from chamfered side (4) of washer (2).
			c. Place over pilot end (6) of crankshaft (8).	Install with lip (3) of seal (1) facing in toward front of crankshaft (8).
			d. Slide seal (1) onto crankshaft (8) until it contacts cylinder block (5).	Apply finger pressure evenly.
			e. Install replacer tool (7) over washer (2).	Stop when replacer tool (7) contacts cylinder block (5).
			f. Drive seal (1) into seal bore of cylinder block (5) until seated.	Make sure seal (1) is flush with cylinder block (5) and and rear main bearing cap (9).

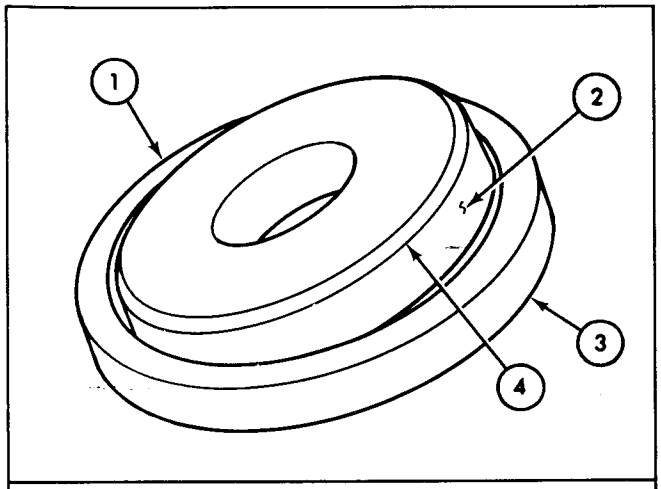

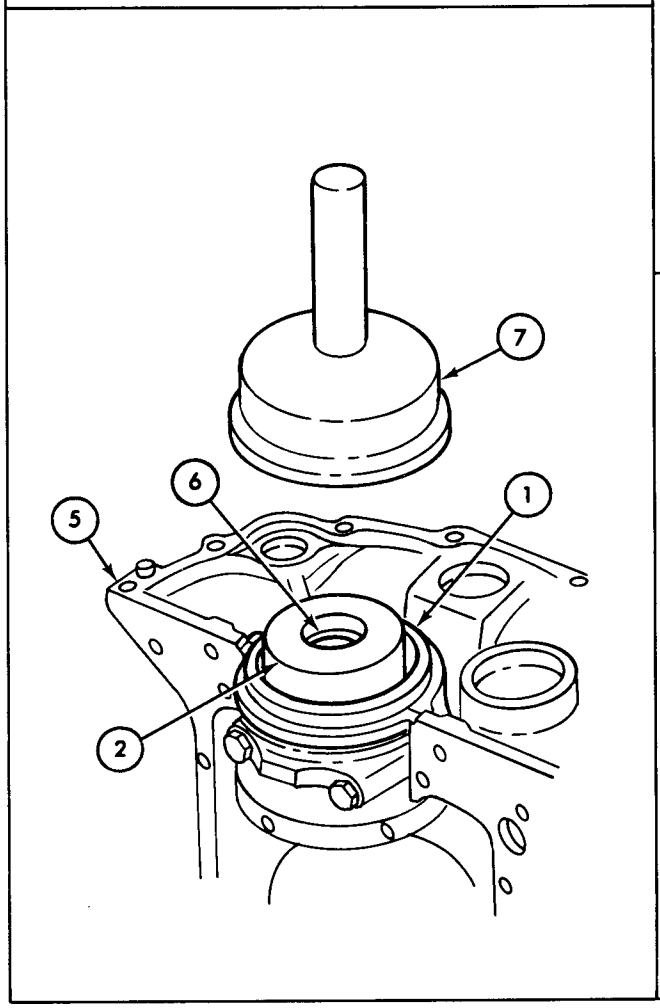

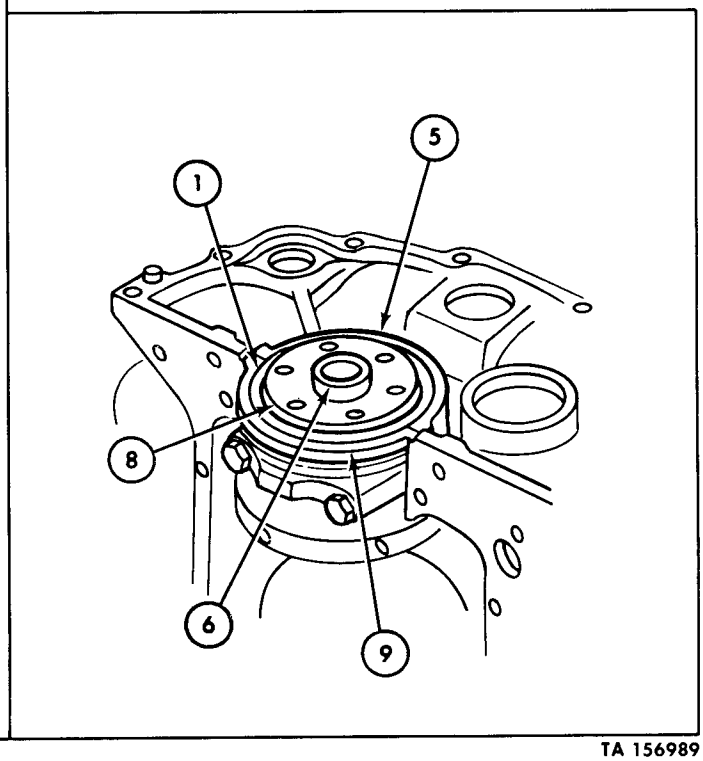

TA 156989

3-16. Reassembly of Engine from Subassemblies (Cont'd)

STEP NO.	LOCATION	ITEM	ACTION	REMARKS
b. VALVE TAPPETS AND CAMSHAFT				
14.		Eight valve tappets (10)	Install in tappet bores (11) until bottomed in cylinder block (5).	Ensures camshaft (12) entry without tappet (10) interference.
15.		Camshaft assembly (12)	Slide into cylinder block (5).	

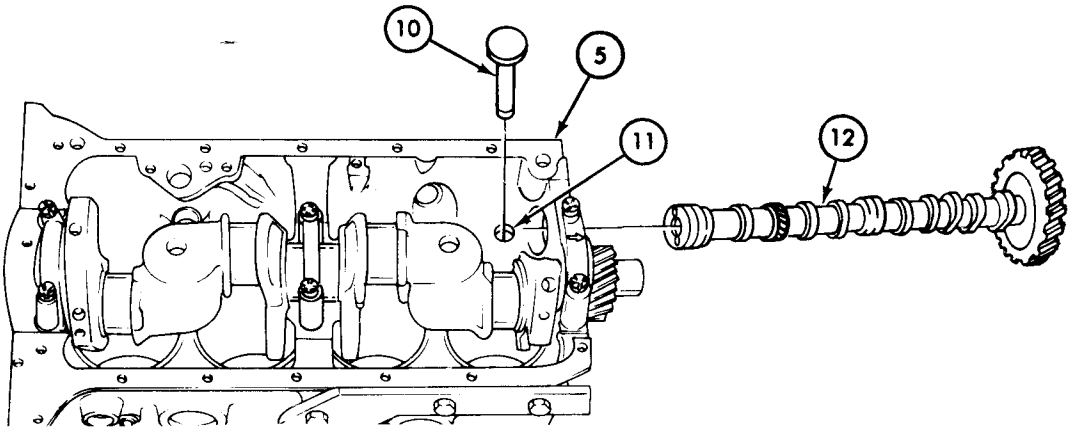

16.		Crankshaft gear timing mark (13) and camshaft gear timing mark (14)	Aline.	
17.		Camshaft thrust plate (15)	Secure to cylinder block (5) with two capscrew-assembled lockwashers (16).	Tighten 10-15 lb-ft (14-21 N•m).

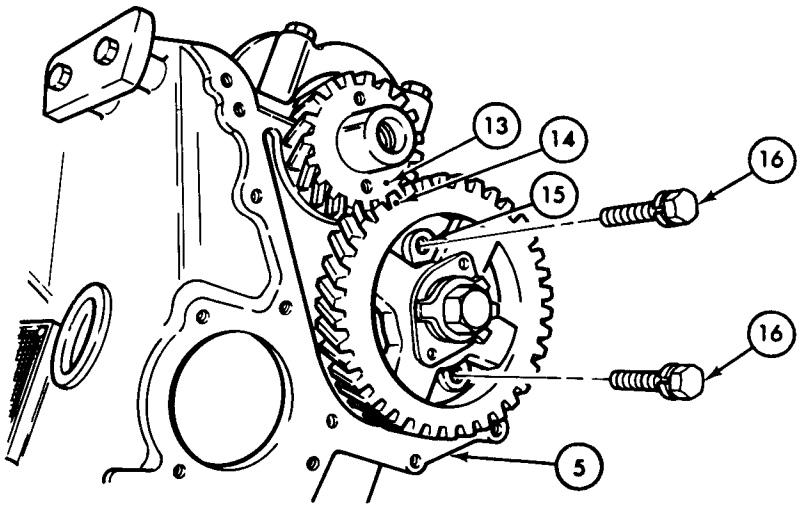

TA 156990

3-16. Reassembly of Engine from Subassemblies (Cont'd)

STEP NO.	LOCATION	ITEM	ACTION	REMARKS
18.		Camshaft timing gear (3)	Measure end play (5) as follows:	
			a. Mount dial indicator assembly (2) on cylinder block (4).	
			b. Place indicator tip (7) on end of camshaft retaining bolt (6).	To ensure accurate reading, make sure bolt (6) is not loose.
			c. "Zero" dial indicator (1).	
			d. Move camshaft to limit of play (5) and observe reading on dial indicator (1).	Camshaft end play (5) is is .003-.006 in. (.0762-.1524 mm). Change camshaft thrust plate to correct end play (5).
19.		Camshaft timing gear (3)	Measure camshaft gear backlash (8) as follows:	
			a. Mount dial indicator assembly (2) on cylinder block (4).	
			b. Place indicator tip (7) at right angles to helical gear tooth (10).	
			c. Move camshaft gear (3) fully clockwise.	
			d. "Zero" dial indicator (1).	
			e. Move camshaft gear (3) fully counterclockwise.	Hold camshaft gear (3) down while measuring backlash (8).
			f. Check backlash (8) between camshaft gear (3) and crankshaft gear (9) and record reading.	Backlash is 0.0025-0.0057 in. (.063-.144 mm). Replace crankshaft gear (9) and camshaft gear (3) if backlash (8) is not within specifications.

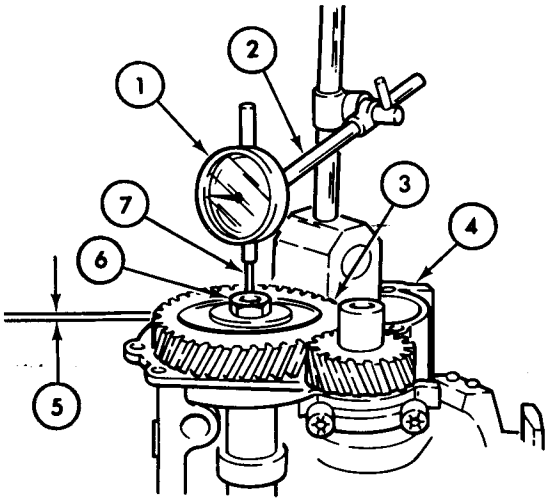

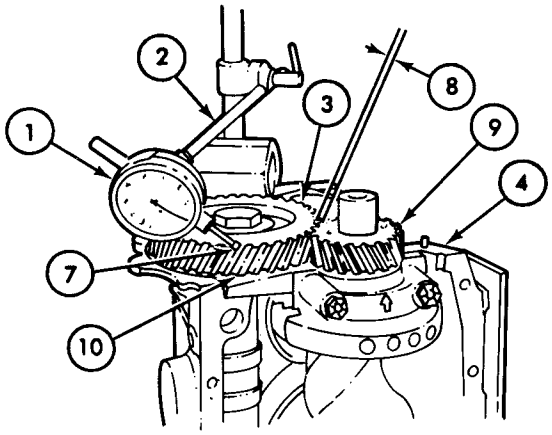

TA 156991

3-16. Reassembly of Engine from Subassemblies (Cont'd)

STEP NO.	LOCATION	ITEM	ACTION	REMARKS
20.		Retainer bolt (12)	*a.* Tighten.	Tighten 50-55 lb-ft (68-75 N•m).
			b. Bend washer tabs (11) against bolt head (12).	

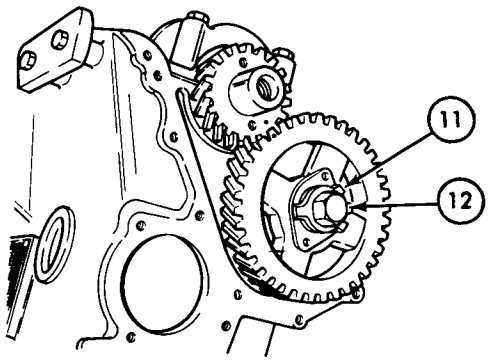

c. FLYWHEEL AND CLUTCH PILOT BEARING

21.		Flywheel (13)	*a.* Place on end of crankshaft (17).	Line up bolt holes.
			b. Secure to crankshaft (17) with six bolts (16).	Lightly coat bolt (16) threads with sealing compound except for first two threads.
				Tighten 75-85 lb-ft (102-116 N•m) in diagonal sequence.
22.		Clutch pilot bearing (15)	*a.* Lubricate bearing bore (14).	Use GAA grease.
			b. Install into flywheel bore (14) until it shoulders against end of crankshaft (17).	Use driver and keep bearing (15) straight.

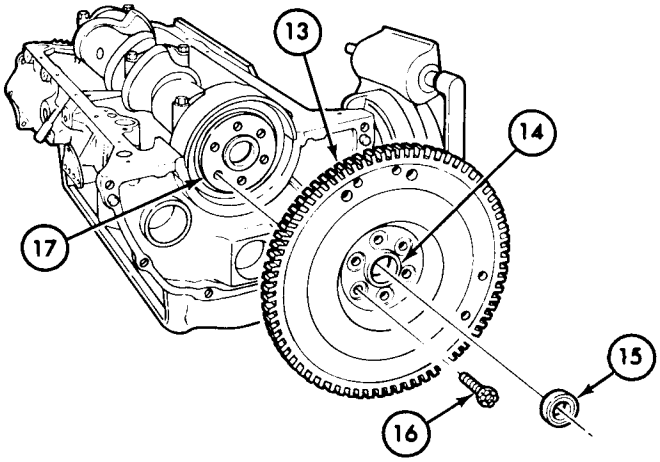

TA 156992

3-16. Reassembly of Engine from Subassemblies (Cont'd)

STEP NO.	LOCATION	ITEM	ACTION	REMARKS
23.		Flywheel (1)	Measure runout as follows:	
			a. Mount dial indicator assembly (4) to back of cylinder block (6).	
			b. Place indicator tip (5) on flywheel clutch face (2).	
			c. "Zero" dial indicator (3).	
			d. Turn flywheel (1) and observe flywheel run-out on dial (3).	Allowable run-out is 0.006 in. (0.15 mm). Replace flywheel (1) if runout exceeds specifications.

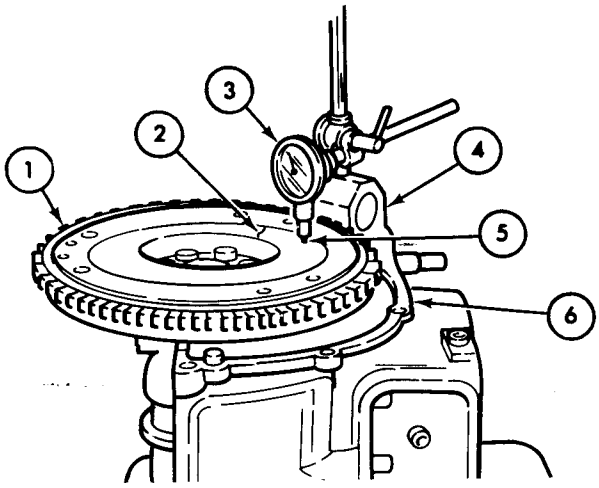

d. PISTONS AND CONNECTING RODS

NOTE

- Lubricate cylinder walls and piston and rod assemblies with OE/HDO oil.
- Refer to paragraph 3-28 for piston ring spacing.

24.	Connecting rod cap (10) to piston and rod assembly (9)	Two nuts (11)	Remove and detach cap (10).	
25.		Piston rings (7)	Compress with ring compressor (13).	Do not tilt or cock compressor (13).
26.		Piston and rod assembly (9)	*a.* Install in same cylinder bore (14) from which removed.	Piston notch (8) faces forward.
			b. Position piston head (9) just below block surface (6).	Oil spit hole (12) faces camshaft.

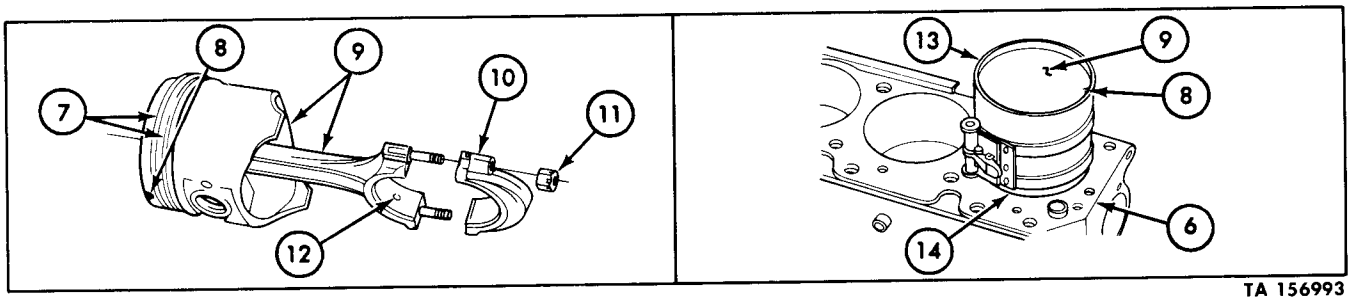

TA 156993

3-16. Reassembly of Engine from Subassemblies (Cont'd)

STEP NO.	LOCATION	ITEM	ACTION	REMARKS
		NOTE		
		Lubricate crankshaft bearing journal (13) with OE/HDO oil.		
27.		Connecting rod (15) and upper bearing half (16)	Tap and guide on journal (13).	Do not allow bolts (14) to scratch journal (13).
28.		Rod bearing cap (10) and lower bearing half (17)	Place over two bolts (14).	Make sure bearing tangs are together.
29.		Connecting rod (15) and rod bearing cap (10)	*a.* Secure to journal (13) with two lock-nuts (11).	Tighten evenly 40-55 lb-ft (54-75 N•m).
			b. Repeat steps 24 through 29 for remaining three piston and connecting rod assemblies.	
30.		Feeler gage (20)	*a.* Insert between connecting rod cap (10) and crankshaft (18).	Measure clearance (19) for all four connecting rods using the same procedure.
			b. Measure clearance (19).	Clearance (19) must be .003-.009 in. (.07-.2 mm).
				If clearance (19) is excessive, replace either connecting rods (15), crankshaft (18), or both.

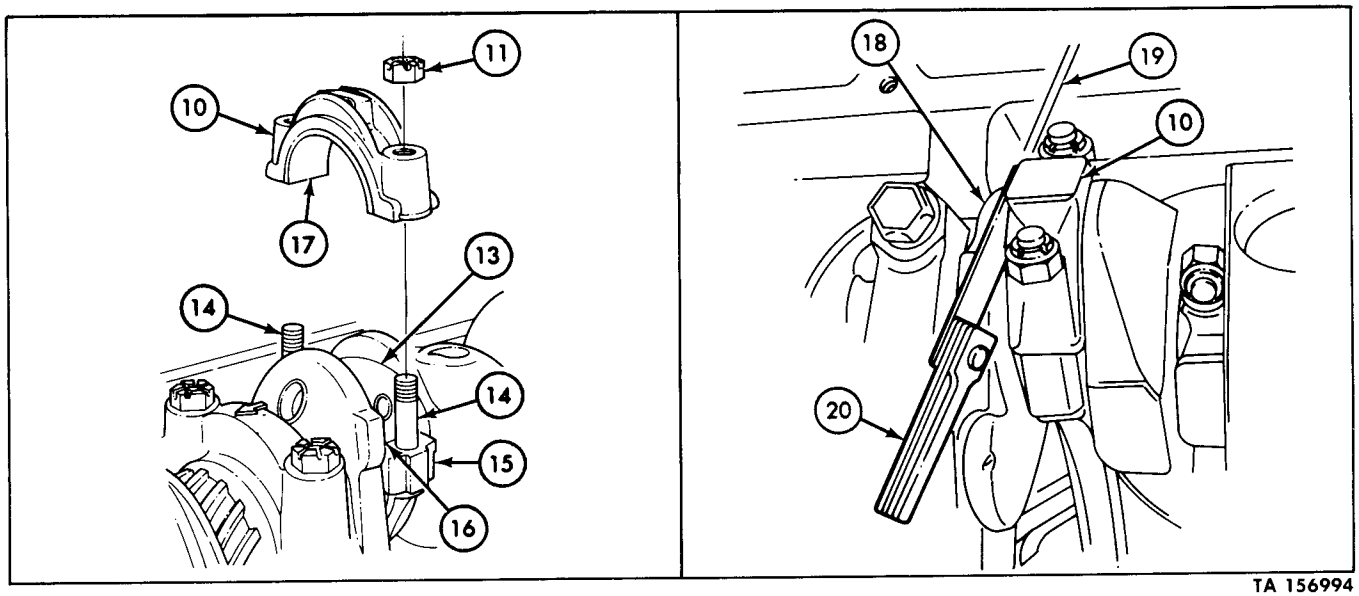

TA 156994

3-16. Reassembly of Engine from Subassemblies (Cont'd)

STEP NO.	LOCATION	ITEM	ACTION	REMARKS
e. OIL PUMP AND STRAINER ASSEMBLY				
31.		Crankshaft gear (1) and camshaft gear (3)	Rotate until timing marks (2) are alined.	Turn crankshaft gear (1) clockwise.
32.		Oil pump strainer assembly (4) and new gasket (6)	Place on pump assembly (7).	
33.		Retaining bolt-assembled lockwasher (5)	Install in oil pump assembly (7).	Finger tighten only.

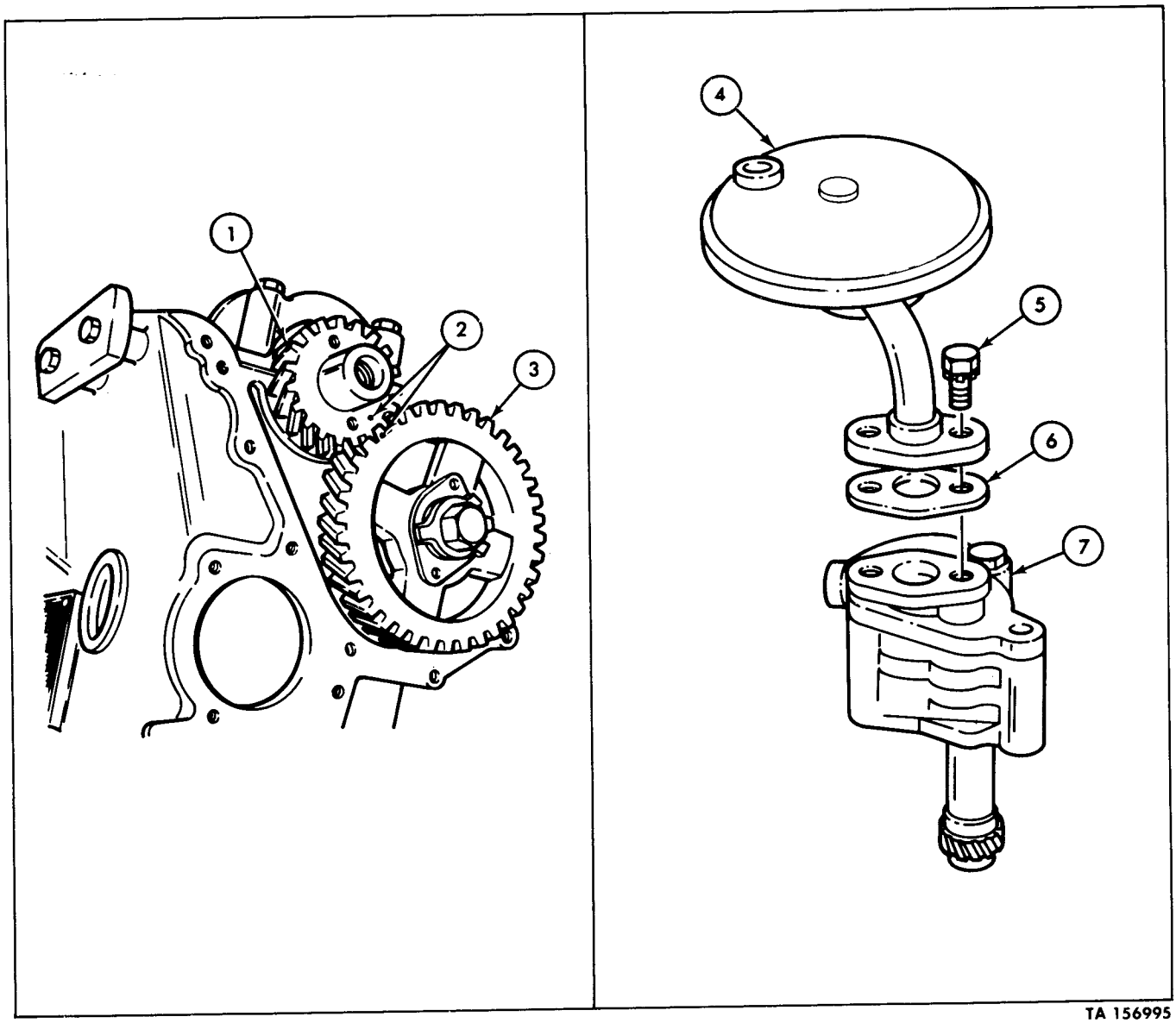

TA 156995

3-16. Reassembly of Engine from Subassemblies (Cont'd)

STEP NO.	LOCATION	ITEM	ACTION	REMARKS
		CAUTION		
		To obtain correct alinement, make sure distributor is removed before installing oil pump assembly (7).		
34.		Oil pump assembly (7) and new oil pump mounting gasket (14)	Place on cylinder block (15).	Make sure V-notch (13) of gear (12) faces forward and exactly parallel to camshaft.
35.		Oil pump assembly (7)	Secure to cylinder block (15) with long bolt (8), short bolt (9), two new lockwashers (10), and flat washers (11).	Tighten 10-15 lb-ft (14-20 N•m).
36.		Bolt (5)	Tighten.	Tighten 10-15 lb-ft (14-20 N•m).

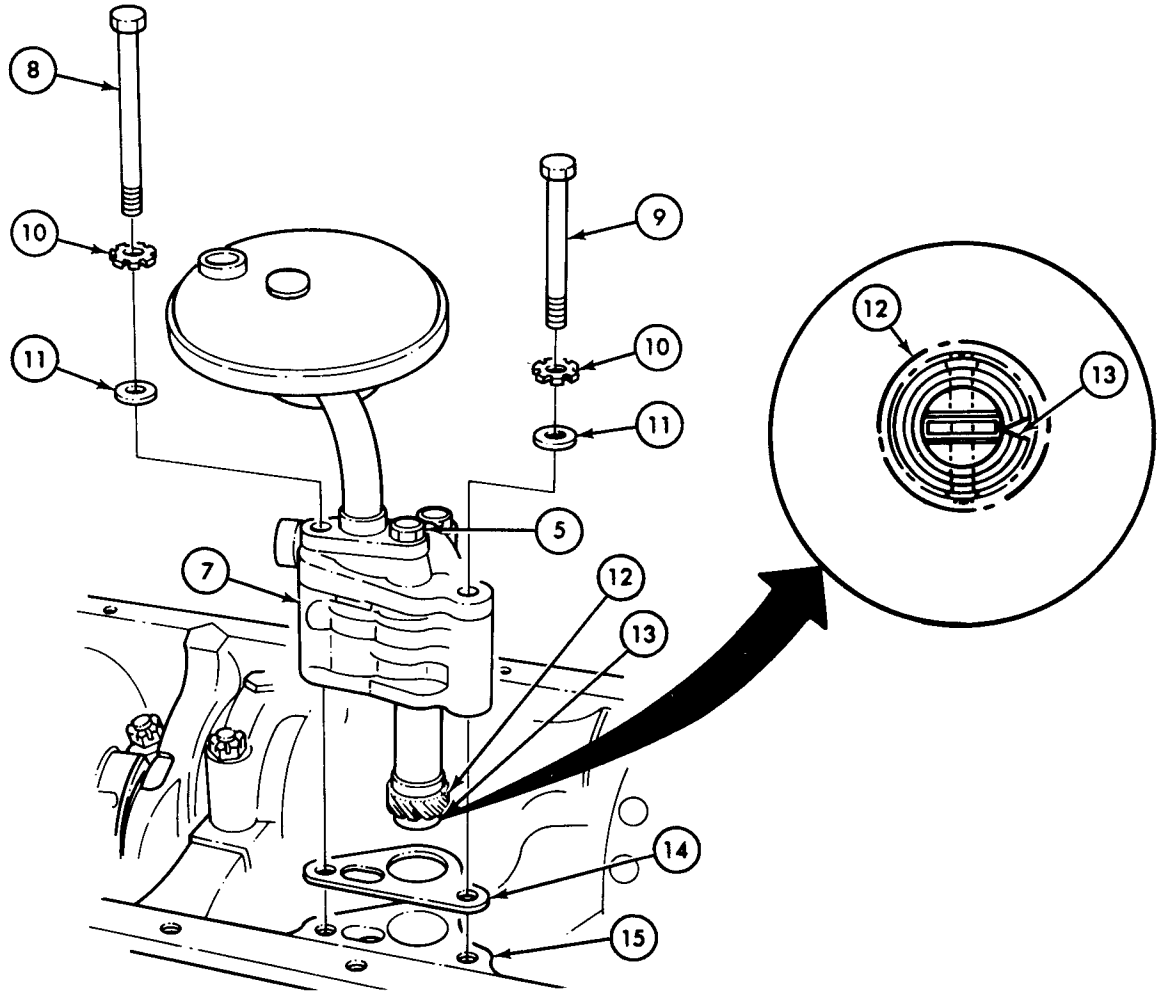

TA 156996

3-16. Reassembly of Engine from Subassemblies (Cont'd)

STEP NO.	LOCATION	ITEM	ACTION	REMARKS
	f. CRANKSHAFT OIL SLINGER AND TIMING GEAR COVER			
37.		Crankshaft front oil slinger (2)	Install on front of crankshaft gear (1).	Dished side (3) faces out.

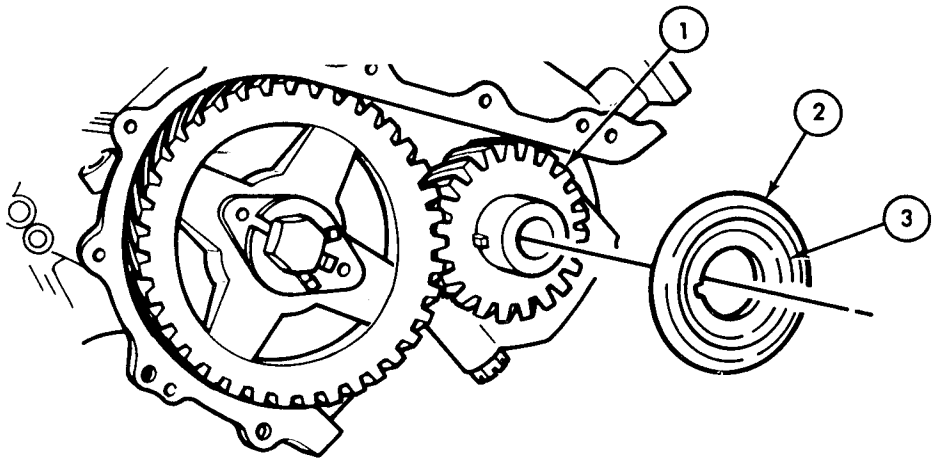

38.		Timing gear cover (6) and new gasket (5)	*a.* Place over two guide pins (10).	Lightly coat each side of gasket (5) with GAA grease.
			b. Secure to cylinder block (4) with eight flat washers (7), new lockwashers (8), and screws (9).	Tighten screws (9) 36-48 lb-in. (4-5.4 N•m).

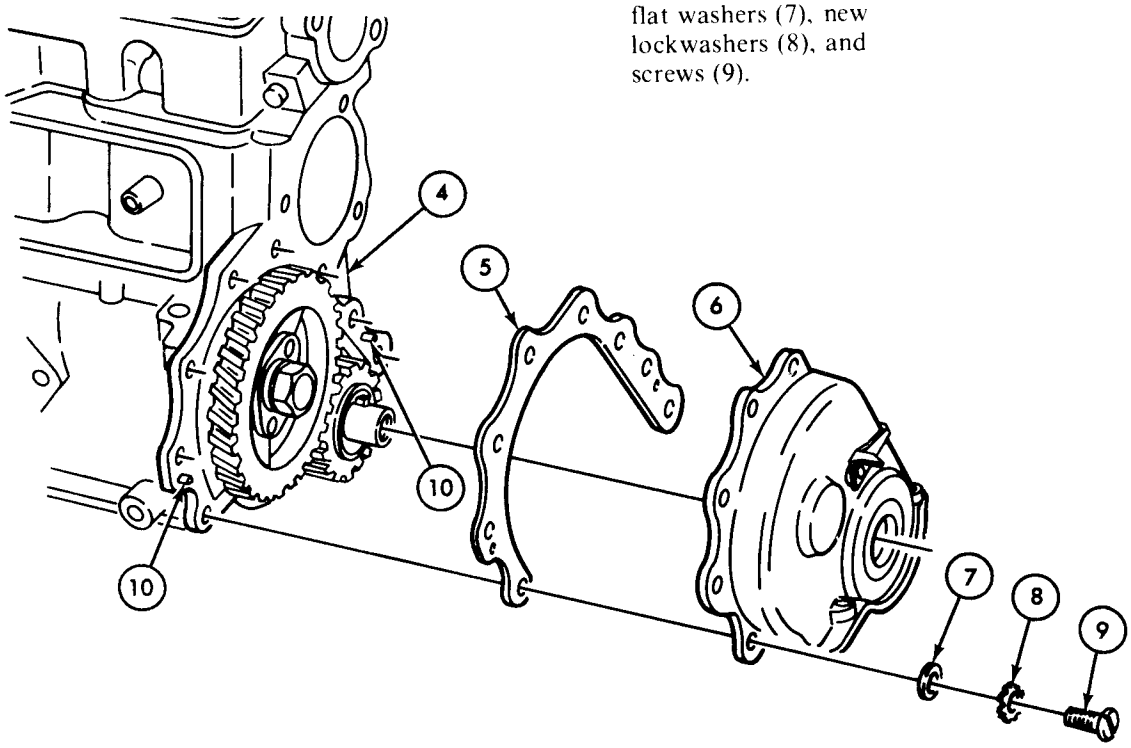

TA 156997

3-16. Reassembly of Engine from Subassemblies (Cont'd)

STEP NO.	LOCATION	ITEM	ACTION	REMARKS
		g. CRANKSHAFT PULLEY		
		NOTE Make sure lip of crankshaft front seal is lubricated with GAA grease.		
39.		Crankshaft pulley (13)	*a.* Aline keyway (16) to woodruff key (11).	
			b. Slide on front end of crankshaft (12) over woodruff key (11).	
			c. Secure to crankshaft (12) with washer (14) and capscrew (15).	Tighten capscrew (15) 80-90 lb-ft (109-122 N•m).

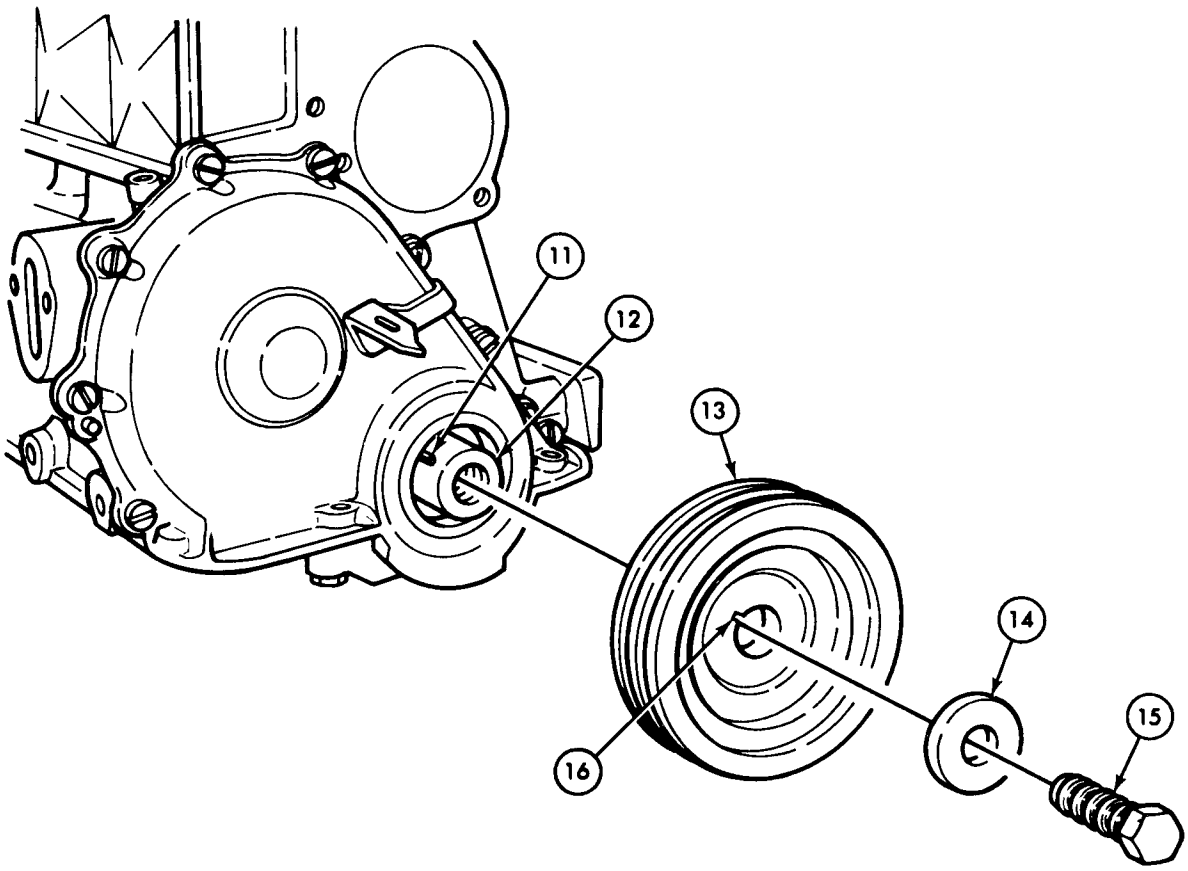

TA 156998

3-16. Reassembly of Engine from Subassemblies (Cont'd)

STEP NO.	LOCATION	ITEM	ACTION	REMARKS
	h. OIL PAN			
		CAUTION		
		Do not damage gaskets during installation.		
40.		New oil pan gaskets (2) and (4)	Install as follows:	
			a. Place four guide studs (5) on cylinder block (8).	Use four 1/4-20 studs or cut heads of four 1/4-20 x 1-1/2 in. bolts.
			b. Place left gasket (2) and right gasket (4) on cylinder block (8).	Coat each side of oil pan gaskets (2) and (4) with adhesive.
41.		New front seal (3)	Fit into groove in timing gear cover (6) with seal ends on top of oil pan gaskets (2) and (4).	
42.		New rear seal (1)	Fit button into drilled hole in rear main bearing cap (7) with seal ends on top of gaskets (2) and (4).	

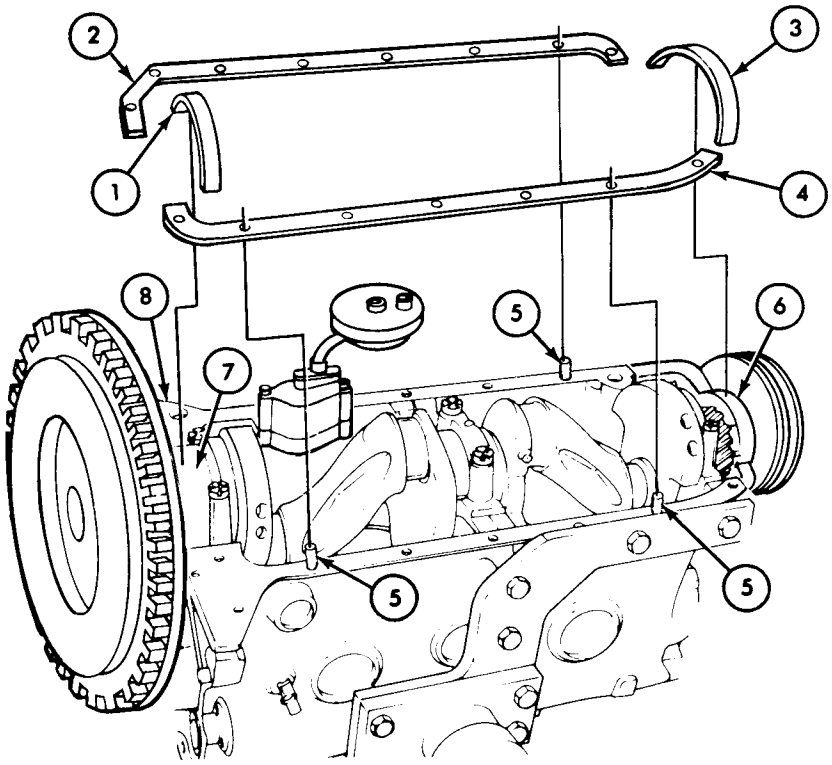

TA 156999

3-16. Reassembly of Engine from Subassemblies (Cont'd)

STEP NO.	LOCATION	ITEM	ACTION	REMARKS

CAUTION

Make sure oil pan drain plug (15) is tight.

43. Oil pan (9)

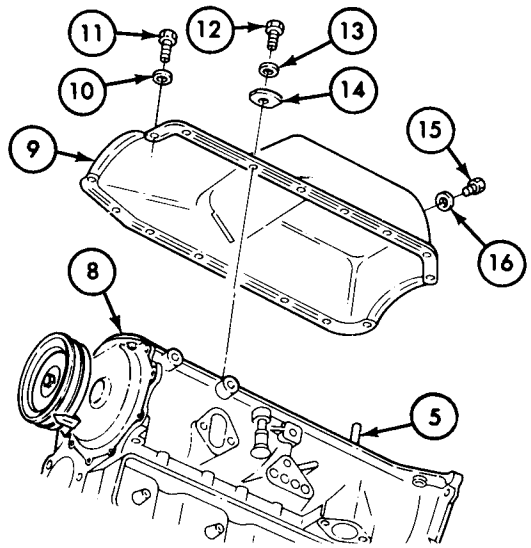

a. Place on guide studs (5) and install four flat washers (14), new lockwashers (13), and screws (12).	Remove four guide studs (5).
b. Secure to block (8) with remaining eight flat washers (14), new lockwashers (13), and screws (12).	Tighten evenly from center of pan (9) outward. Tighten 36-48 lb-in (4-5 N•m).
c. Secure to block (8) with four flat washers (10) and capscrews (11).	Tighten 9-12 lb-ft (12-16 N•m).
d. Install drain plug (15) and new gasket (16).	Tighten 25-35 lb-ft (34-48 N•m).

i. VALVE PUSH ROD COVER

44. Valve push rod cover (17) and new gasket (18)

a. Place on cylinder block (8).	Cover (17) is marked "top". Coat cover side of gasket (18) with adhesive.
b. Secure to cylinder block (8) with three new seal assemblies (19) and screws (20).	Tighten 36-48 lb-in. (4-5 N•m). Cover (17) will be secured at second hole location (21) when vent line clamp is secured (para 3-17).

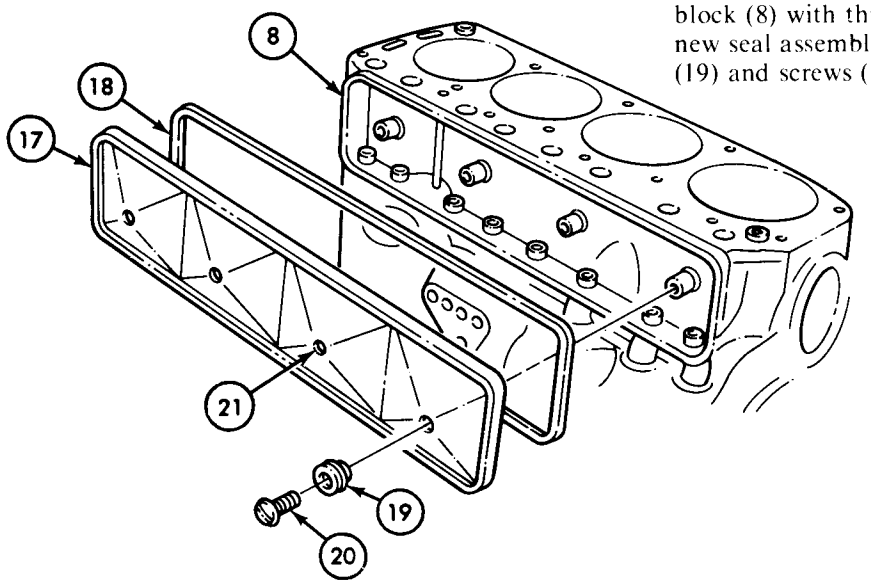

TA 157000

3-16. Reassembly of Engine from Subassemblies (Cont'd)

STEP NO.	LOCATION	ITEM	ACTION	REMARKS
j. CYLINDER HEAD				
45.		Cylinder head gasket (3)	Place on block hollow dowel pins (4).	Lightly coat each side of gasket (3) with sealer.
46.		Cylinder head (1)	Place on gasket (3) and hollow dowel pins (4).	
47.		Ten capscrews (2)	*a.* Lightly coat threads with sealer — except first two threads.	
			b. Install in cylinder head (1), head gasket (3), and cylinder block (5).	
			c. Follow tightening sequence (6).	Use three step tightening sequence as follows: 10-15 lb-ft (14-21 N•m). 45-55 lb-ft (61-75 N•m). 60-65 lb-ft (81-88 N•m).

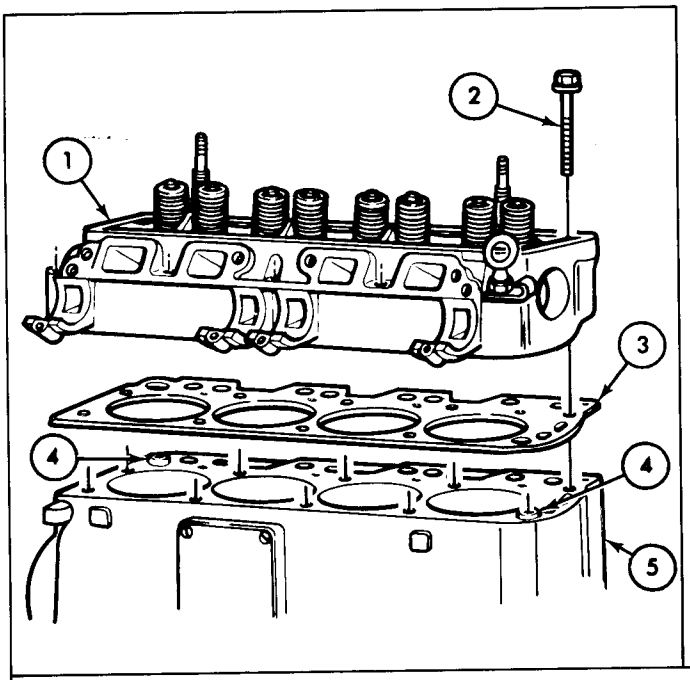

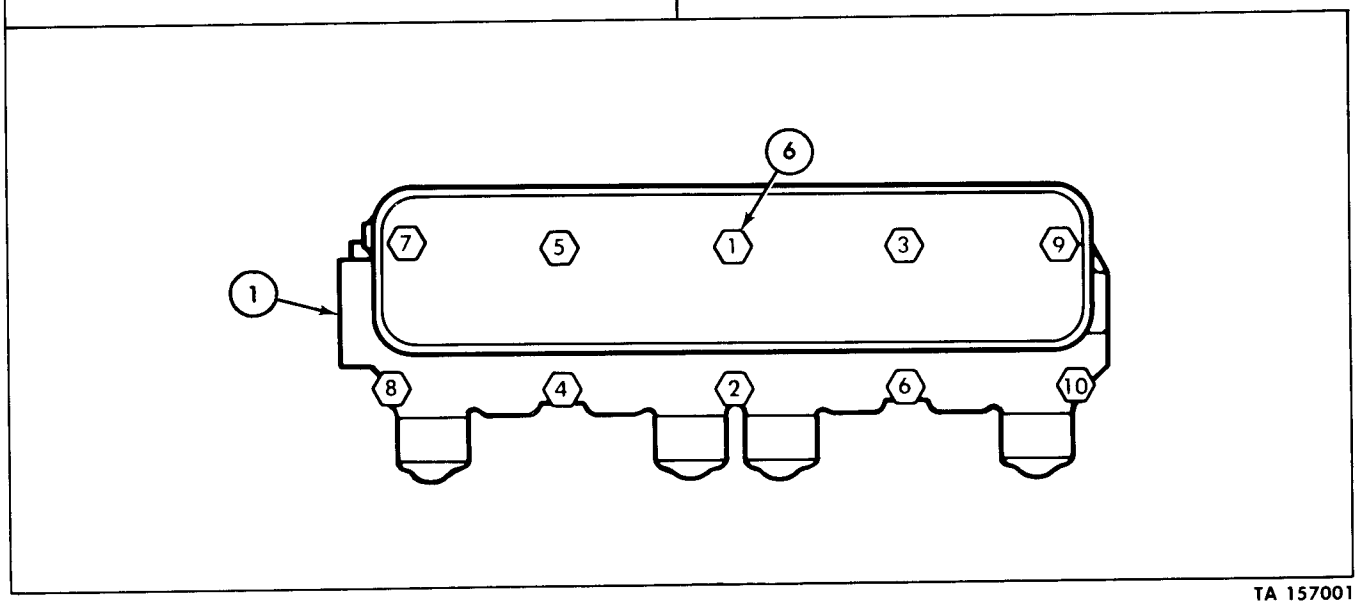

TA 157001

3-16. Reassembly of Engine from Subassemblies (Cont'd)

STEP NO.	LOCATION	ITEM	ACTION	REMARKS
48.		Eight push rods (9)	Install and center on each valve tappet.	Place ball end down in same position from which removed.
49.		Four exhaust valve caps (7)	Place on exhaust valve stems (8)	Exhaust valves are numbered 1-4-5-8.

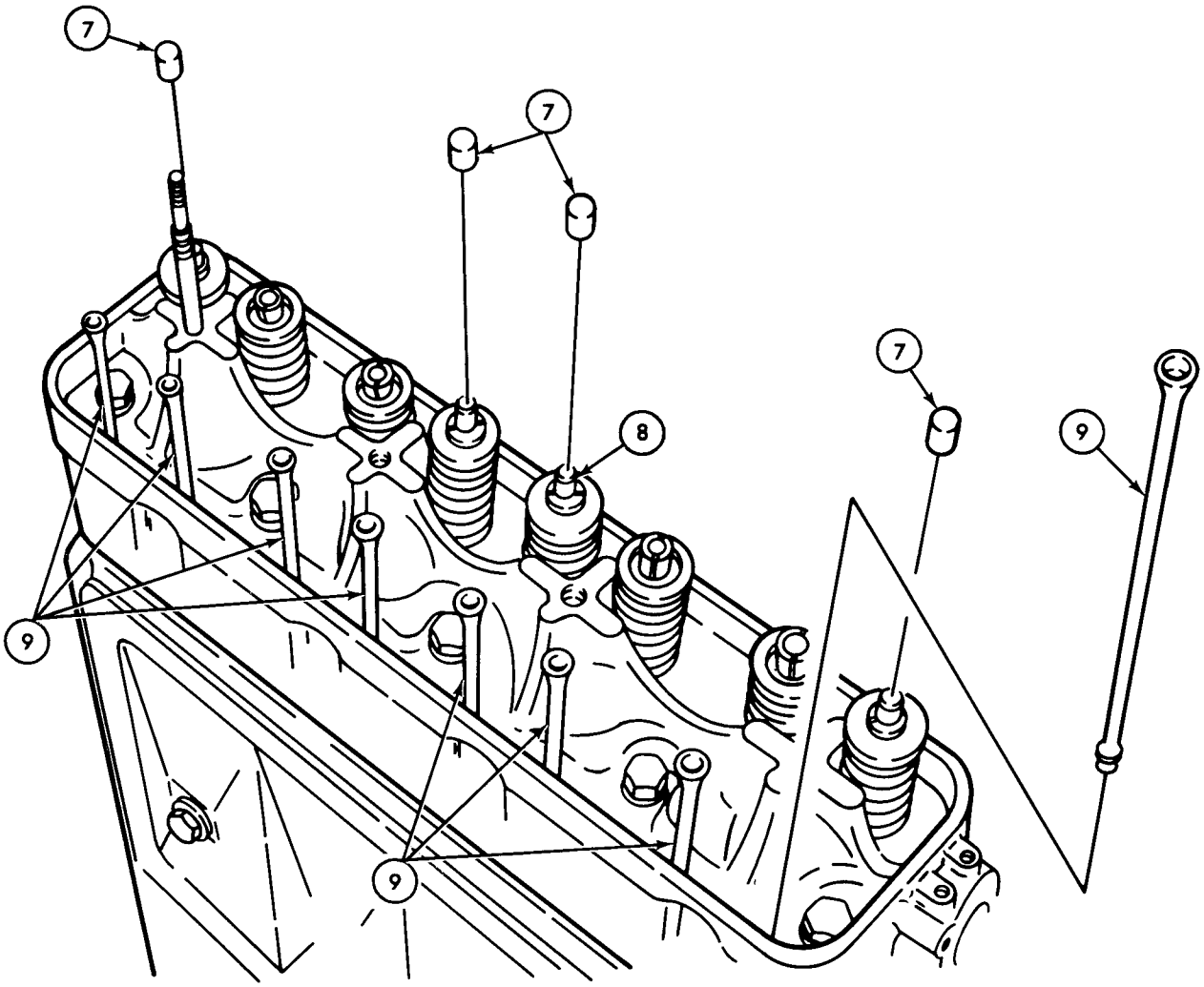

TA 157002

3-16. Reassembly of Engine from Subassemblies (Cont'd)

STEP NO.	LOCATION	ITEM	ACTION	REMARKS
50.		Oil inlet line (1), oil outlet line (13), and two oil tube brackets (4)	Place on rocker arm shaft assembly (7).	
51.		Rocker arm shaft assembly (7)	Install as follows:	
			a. Install new oil inlet line seal (16) on lower end of oil inlet line (1).	
			b. Place on two studs (9) and eight push rods (12).	Make sure oil inlet line (1) enters supply hole (15) and oil return line (13) enters drain hole (14).
				Make sure rocker arm balls (8) seat in push rod cups (11).
			c. Secure ends to cylinder head (10) with flat washer (6), two new lockwashers (3), and two nuts (2).	Keep rocker arm assembly (7) straight during installation.
				Finger tighten only.
			d. Secure remaining two holes to cylinder head (10) with flat washer (6), two new lockwashers (3), and two capscrews (5).	Tighten rocker arm assembly (7) evenly to cylinder head (10).
				Tighten two nuts (2) and capscrews (5) 35-40 lb-ft (48-55 N•m).

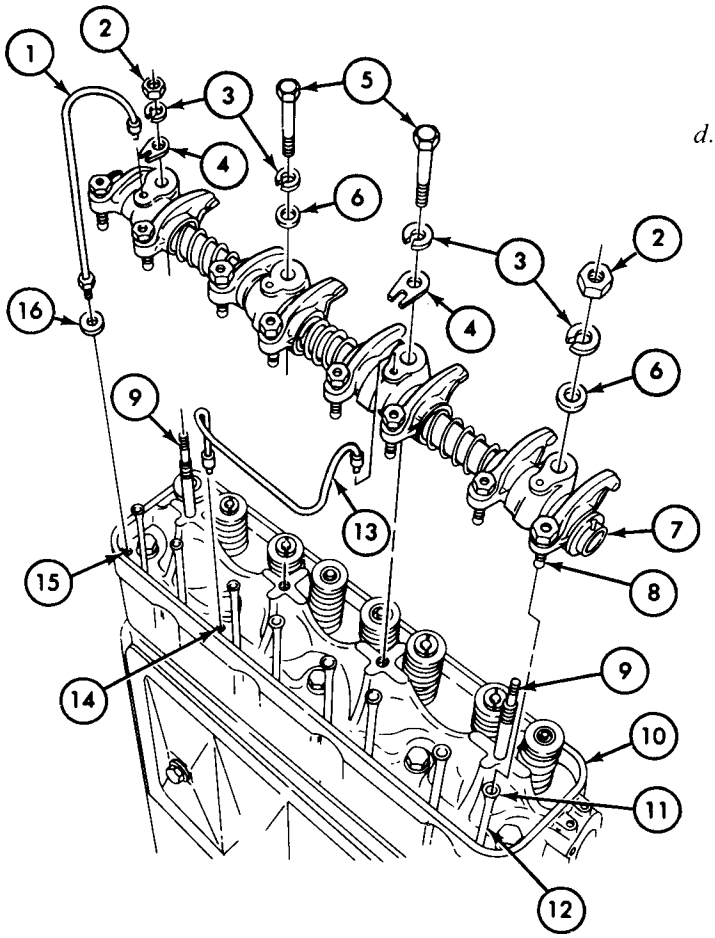

TA 157003

3-16. Reassembly of Engine from Subassemblies (Cont'd)

STEP NO.	LOCATION	ITEM	ACTION	REMARKS
52.		Rocker arms (17)	Perform preliminary valve adjustment as follows:	
			a. Turn crankshaft clockwise until number one piston is at top dead center on the compression stroke.	"V" notch in oil pump shaft must aline with crankshaft pulley timing mark.
			b. Insert feeler gage (18) between rocker arm (17) and valve stem (19), and turn self-locking adjusting screw (20) until slight resistance is felt on feeler gage (18).	Use .017 in. (.4318 N•m) feeler gage (18).
			c. Turn crankshaft clockwise one-half turn at a time.	Follow firing order 1-3-4-2, and repeat valve setting procedure on remaining valves.

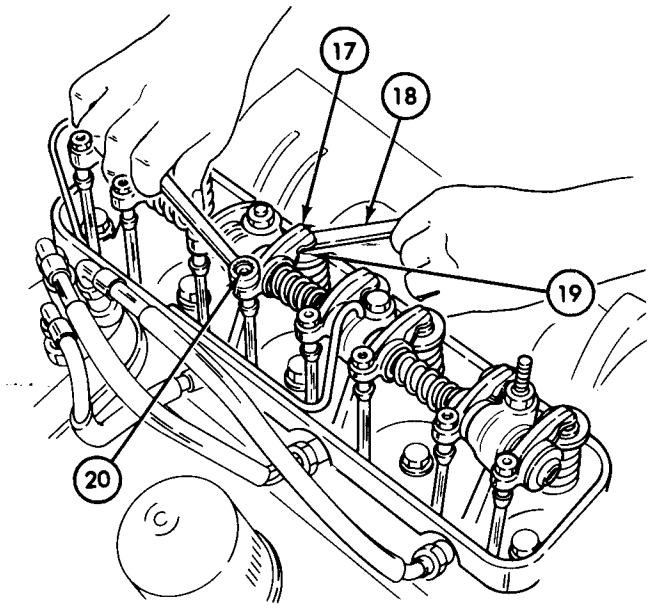

k. OIL FILTER ADAPTER

53.		New oil filter adapter gasket (22) and oil filter adapter (21).	*a.* Place on cylinder block (23).	Lightly coat each side of gasket (22) with GAA grease.
			b. Secure to cylinder block (23) with two capscrew-assembled lockwashers (25) and flat washers (24).	Lightly coat threads with sealer — except first two threads. Tighten 23-28 lb-ft (31-38 N•m).

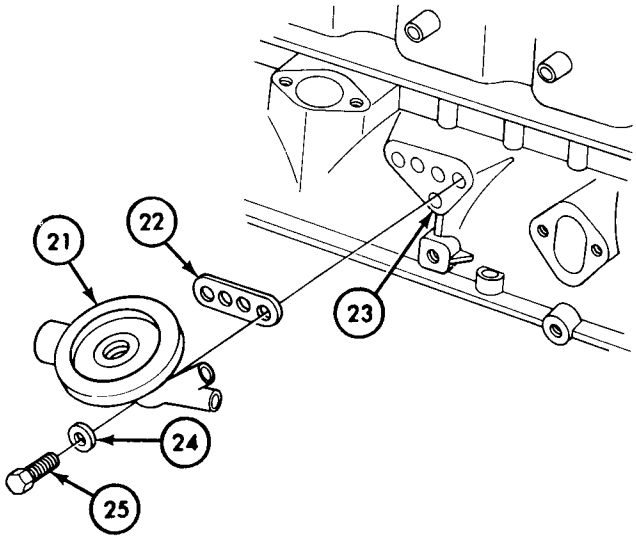

END OF TASK!

FOLLOW-ON TASK: Install external components (para 3-17).

TA 157004

3-17. Installation of External Engine Components

This task covers:

a. Coolant Temperature Sending Unit
b. Distributor
c. Spark Plugs
d. Right Engine Mounting Bracket
e. Oil Pressure Transmitter
f. Oil Filter
g. Fuel Line
h. Fuel Pump
i. Rocker Arm Cover
j. Water Pump, Fan, and Pulley
k. Thermostat
l. Exhaust Manifold
m. Intake Manifold
n. Vent Lines
o. Carburetor and Bellcrank

INITIAL SETUP:

Applicable Models	Equipment Condition Reference	Condition Description
All	Para 3-16	Engine reassembled from subassemblies.

Test Equipment

None

Special Tools

Torque wrench (0-200 lb-in.)
Torque wrench (0-175 lb-ft)

Special Environmental Conditions

Clean, well-ventilated work area.

Materials/Parts

Sealer (NSN 8030-00-543-4384)
Adhesive (NSN 8040-00-290-4301)
Graphite grease (NSN 9150-00-257-5370)
GAA grease
OE/HDO oil
Eighteen lockwashers
Carburetor gasket
Valve push rod cover seal
Five locking tab washers
Two intake manifold gaskets
Water pump gasket
Thermostat housing gasket
Two rocker arm cover seals
Rocker arm cover gasket
Fuel pump gasket
Distributor "O" ring
Four spark plug gaskets

Personnel Required

One mechanic

General Safety Instructions

Fuel is extremely flammable. Do not work on engine near sparks or open flames.

Manual References

TM 9-2320-218-34P
LO 9-2320-218-12

3-17. Installation of External Engine Components (Cont'd)

STEP NO.	LOCATION	ITEM	ACTION	REMARKS
a. COOLANT TEMPERATURE SENDING UNIT				
1.		Coolant temperature sending unit (1)	Screw into rear of cylinder head (2) and tighten.	Lightly coat threads with sealer — except first two threads.

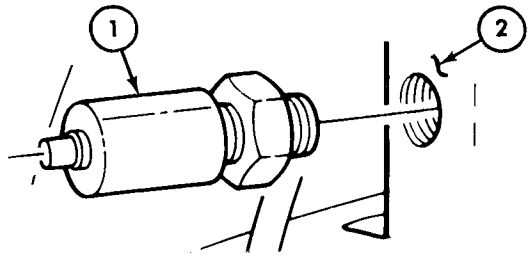

b. DISTRIBUTOR

NOTE

V-notch (4) on top of oil pump shaft gear (5) must face toward front of engine. This allows for correct timing of distributor.

2.		Intermediate distributor drive shaft (3)	Install as follows:	
			a. Coat with light film of oil.	Use OE/HDO oil.
			b. Engage small end with oil pump drive shaft gear (5).	Offset portion (6) of upper shaft (3) faces front of engine.

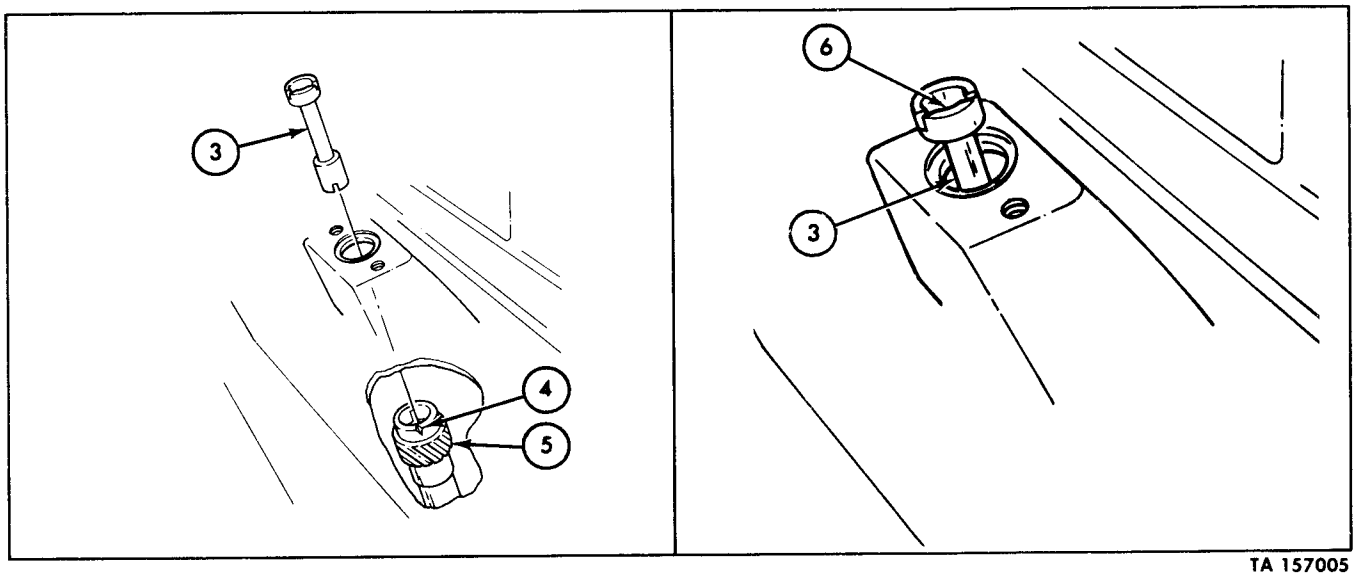

TA 157005

3-17. Installation of External Engine Components (Cont'd)

STEP NO.	LOCATION	ITEM	ACTION	REMARKS
3.		New "O" ring (6)	Place on distributor mounting adapter (9).	
4.		Intermediate distributor drive shaft (7)	Aline with distributor coupling located in mounting adapter (9).	Distributor coupling tangs are offset and will engage shaft (7) in one position only.
5.		Distributor assembly (3)	Install as follows:	
			a. Place over intermediate drive shaft (7).	
			b. Turn slightly by hand until seated in intermediate drive shaft (7).	Make sure distributor assembly (3) is seated on cylinder block (8).
			c. Secure to cylinder block (8) with two new lockwashers (5) and capscrews (4).	Finger tighten only.
6.		Four spark plug cables (1)	Connect to marked locations on distributor cover (10) and secure with four cable nuts (2).	Tighten cable nuts (2) finger tight, and then tighten an additional 1/4-1/2 turn with wrench.

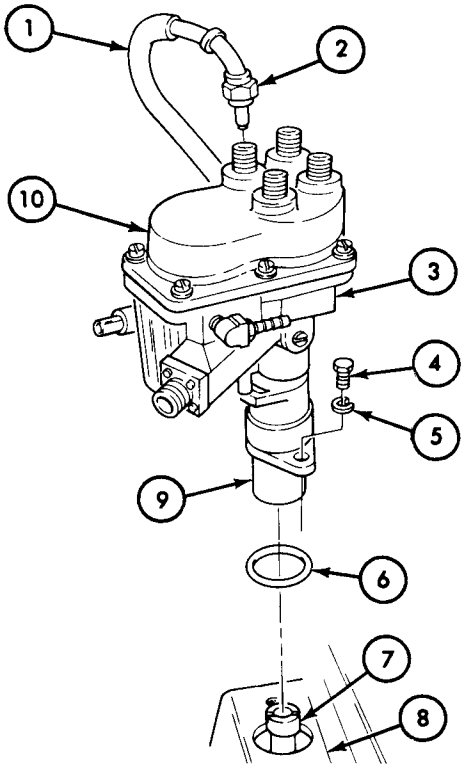

TA 157006

3-17. Installation of External Engine Components (Cont'd)

STEP NO.	LOCATION	ITEM	ACTION	REMARKS
c. SPARK PLUGS				
7.		Four spark plugs (11)	Set gap to 0.032-0.036 in. (0.812 -0.914 mm).	Use feeler gage.
8.		Four spark plugs (11) and new gaskets (12)	Install in cylinder head (13) and tighten.	Start threads by hand to avoid cross threading.
				Tighten 27-30 lb-ft (37-41 N•m).
9.		Four spark plug cables (1)	Connect to spark plugs (11) at marked locations and secure with four cable nuts (14).	Tighten cable nuts (14) finger tight, then tighten an additional 1/4-1/2 turn with wrench.

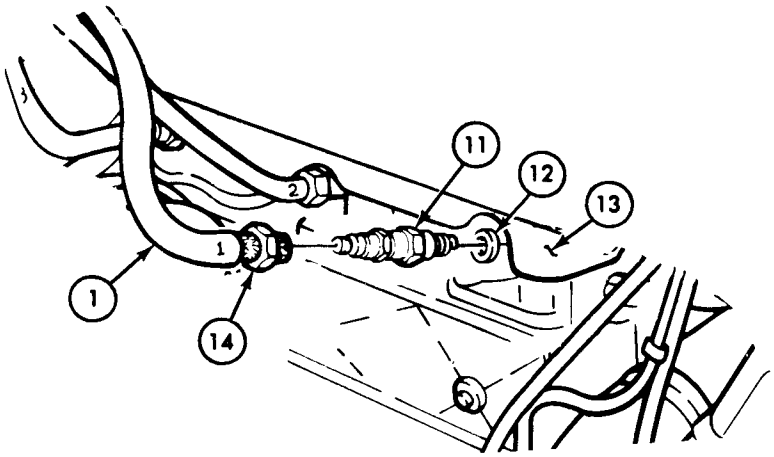

TA 157007

3-17. Installation of External Engine Components (Cont'd)

STEP NO.	LOCATION	ITEM	ACTION	REMARKS
d. RIGHT ENGINE MOUNTING BRACKET				
10.		Right engine mounting bracket (3)	Secure to cylinder block (4) with two new lock-washers (2) and cap-screws (1).	Tighten 35-40 lb-ft (48-54 N•m).

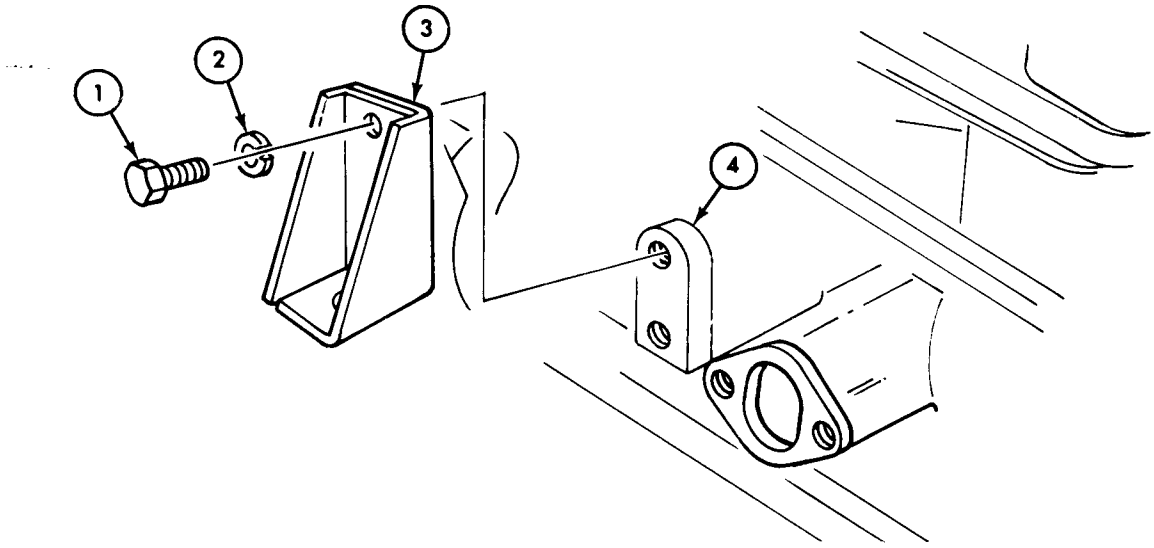

e. OIL PRESSURE TRANSMITTER				
11.		Oil pressure transmitter (5)	Screw into oil filter mounting base (7) by hand.	
12.		Oil pressure transmitter nut (6)	Wrench tighten.	

TA 157008

3-17. Installation of External Engine Components (Cont'd)

STEP NO.	LOCATION	ITEM	ACTION	REMARKS

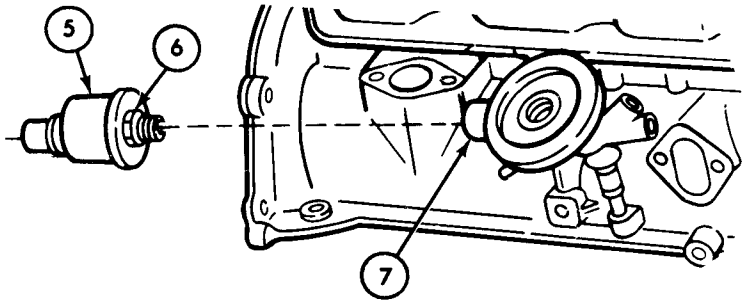

f. OIL FILTER

13.		Oil filter and gasket (8)	*a.* Coat oil filter gasket with oil.	Use OE/HDO oil.
			b. Install and tighten until filter gasket contacts filter base (7).	
			c. Tighten an additional 3/4 turn.	

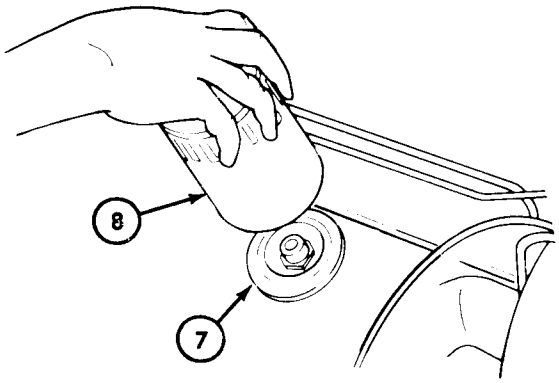

TA 157009

3-17. Installation of External Engine Components (Cont'd)

STEP NO.	LOCATION	ITEM	ACTION	REMARKS
g. FUEL LINE				
14.		Fuel outlet line (3) and clip (4)	Position to bracket (1) and secure with capscrew (2), new lockwasher (5), and nut (6).	Tighten nut (6) 6-10 lb-ft (8-16 N•m).

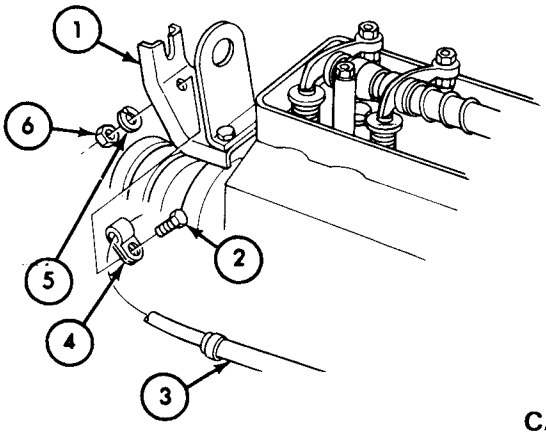

CAUTION

To avoid fuel flow restriction, do not kink fuel lines.

h. FUEL PUMP				
15.		New gasket (9) and fuel pump (7)	Secure to cylinder block (8) with two flat washers (12), new lockwashers (13), and capscrews (14).	Apply sealer to capscrew (14) threads — except first two threads. Tighten capscrews (14) 10-15 lb-ft (14-20 N•m).
16.		Ventilation line (10)	Connect to fuel pump (7) and secure with hose clamp (11).	
17.		Fuel outlet line (3)	Secure to fuel pump connector (15).	

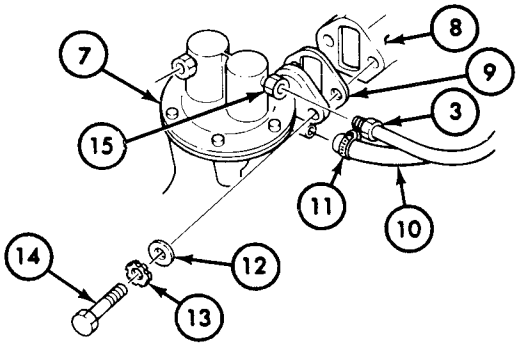

TA 157010

3-17. Installation of External Engine Components (Cont'd)

STEP NO.	LOCATION	ITEM	ACTION	REMARKS
i. ROCKER ARM COVER				
18.		New rocker arm cover gasket (23)	Lightly coat with adhesive on cover side only and place on cover flange (21).	Make sure gasket (23) is centered on flange (21).
19.		Rocker arm cover gasket (23) and rocker arm cover (16)	Secure to cylinder head (22) with two new seals (17), washers (18), and nuts (19).	Tighten two nuts (19) 18-24 lb-in. (2-3 N•m).
20.		Oil cap retaining chain (20)	Secure to front washer washer (18).	

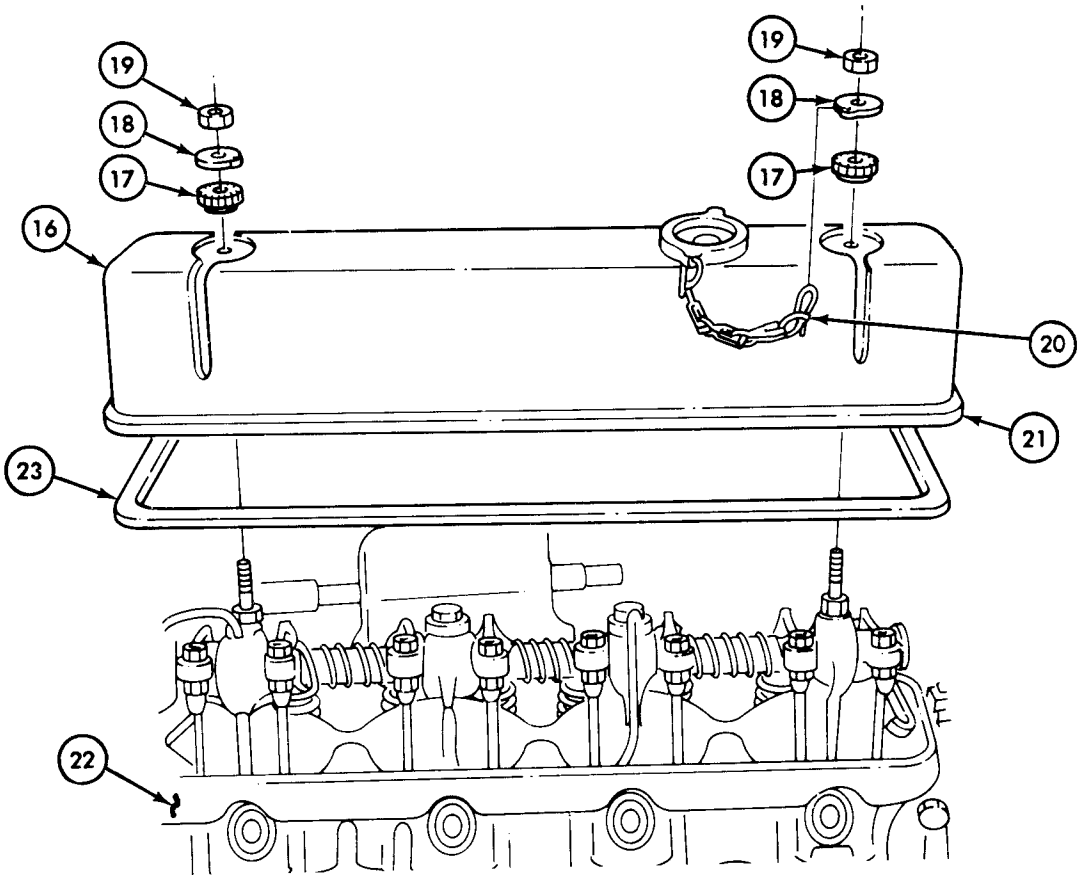

TA 157011

3-17. Installation of External Engine Components (Cont'd)

STEP NO.	LOCATION	ITEM	ACTION	REMARKS
j. WATER PUMP, FAN, AND PULLEY				
21.		New gasket (2) and water pump (3)	Place on cylinder block (1) and secure with three capscrews (4).	Tighten capscrews (4) 10-15 lb-ft (14-20 N•m).
22.		Fan pulley (8)	Place on water pump hub (9).	
23.		Radiator fan blade (7)	Place on fan pulley (8) and secure with four new lockwashers (6) and capscrews (5).	Tighten capscrews (5) 15-20 lb-ft (20-27 N•m).

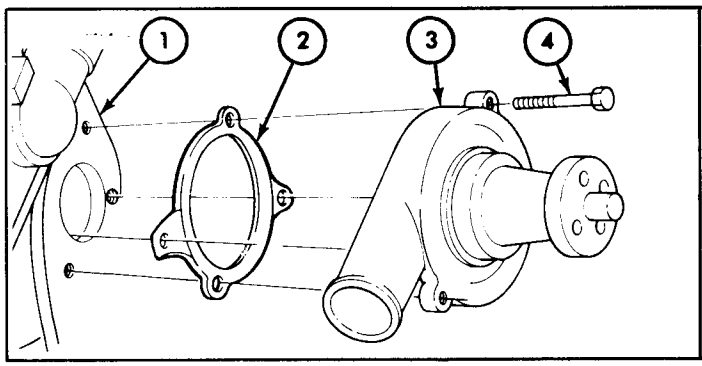

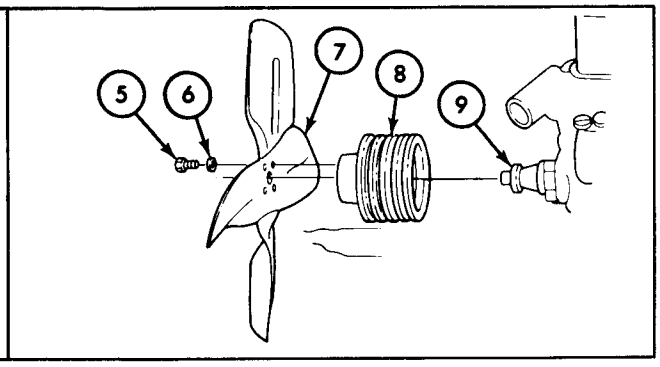

STEP NO.	LOCATION	ITEM	ACTION	REMARKS
k. THERMOSTAT				
24.		Thermostat (12)	Install in cylinder head (10).	Make sure valve sensor (11) faces head (10).
25.		New gasket (13)	Position over thermostat (12), and aline two holes.	Lightly coat each side of gasket (13) with GAA grease.
26.		Thermostat housing (14)	Install over thermostat (12) and secure with two capscrew-assembled lockwashers (15).	Tighten 10-15 lb-ft 14-20 N•m).

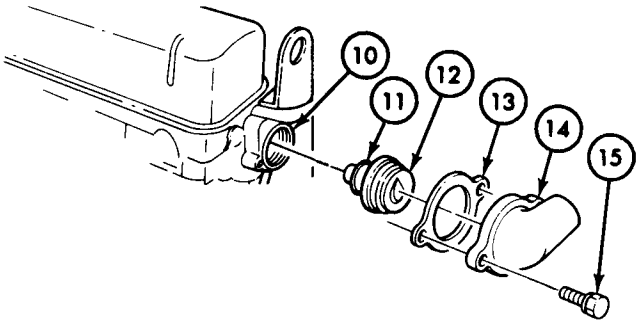

TA 157012

3-17. Installation of External Engine Components (Cont'd)

STEP NO.	LOCATION	ITEM	ACTION	REMARKS
I. EXHAUST MANIFOLD				
27.		Exhaust manifold (17)	Place on cylinder head (10) and mark locations of exhaust ports (24) and (23) on head (10) and manifold (17).	This will assist in alinement of exhaust ports (24) and (23) during installation.
28.		Exhaust manifold ports (24)	Coat with graphite grease.	
		NOTE To prevent disturbing graphite grease distribution, do not rotate manifold (17) on cylinder head (10).		
29.		Exhaust manifold flange (20)	Secure to cylinder block (1) with new lockwasher (21), and capscrew (22).	Finger tighten only.
30.		Exhaust manifold (17)	Secure to engine exhaust ports (23) with two mounting clamps (16), four new tab lockwashers (18), and capscrews (19).	Alternately tighten all four capscrews (19) before final tightening 12-16 lb-ft (17-22 N•m).
31.		Four tab lockwashers (18)	Bend tabs over end of each capscrew (19).	
32.	Exhaust manifold flange (20)	Capscrew (22)	Tighten.	Tighten 20-30 lb-ft (27-41 N•m).

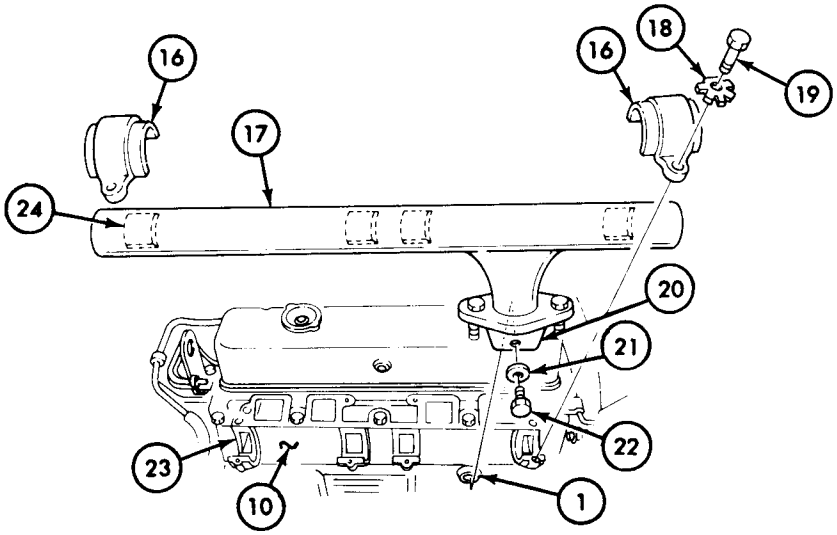

TA 157013

3-17. Installation of External Engine Components (Cont'd)

STEP NO.	LOCATION	ITEM	ACTION	REMARKS
I. EXHAUST MANIFOLD				
27.		Exhaust manifold (17)	Place on cylinder head (10) and mark locations of exhaust ports (24) and (23) on head (10) and manifold (17).	This will assist in alinement of exhaust ports (24) and (23) during installation.
28.		Exhaust manifold ports (24)	Coat with graphite grease.	
		NOTE		
		To prevent disturbing graphite grease distribution, do not rotate manifold (17) on cylinder head (10).		
29.		Exhaust manifold flange (20)	Secure to cylinder block (1) with new lockwasher (21), and capscrew (22).	Finger tighten only.
30.		Exhaust manifold (17)	Secure to engine exhaust ports (23) with two mounting clamps (16), four new tab lockwashers (18), and capscrews (19).	Alternately tighten all four capscrews (19) before final tightening 12-16 lb-ft (17-22 N•m).
31.		Four tab lockwashers (18)	Bend tabs over end of each capscrew (19).	
32.	Exhaust manifold flange (20)	Capscrew (22)	Tighten.	Tighten 20-30 lb-ft (27-41 N•m).

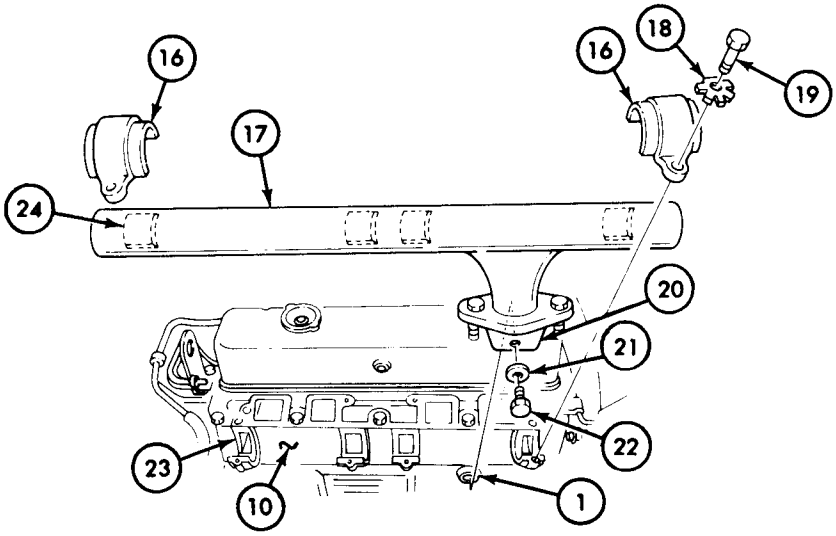

TA 157013

3-17. Installation of External Engine Components (Cont'd)

STEP NO.	LOCATION	ITEM	ACTION	REMARKS
m. INTAKE MANIFOLD				
33.		Two new gaskets (8) and intake manifold (2)	*a.* Place on cylinder head (1).	
			b. Install four flat washers (7), new lockwashers (6), and capscrews (5) through top four manifold (2) holes.	Tighten capscrews (5) 10-15 lb-ft (14-20 N•m).
			c. Install new locking tab washer (4) and two capscrews (3) through two lower manifold (2) holes.	Tighten capscrews (3) 8-10 lb-ft (11-14 N•m).
34.		Four upper capscrews (5)	Tighten 23-28 lb-ft (31-38 N•m).	
35.		Two lower capscrews (3)	Tighten 12-16 lb-ft (16-22 N•m) and bend tabs on tab washer (4) up to lock.	

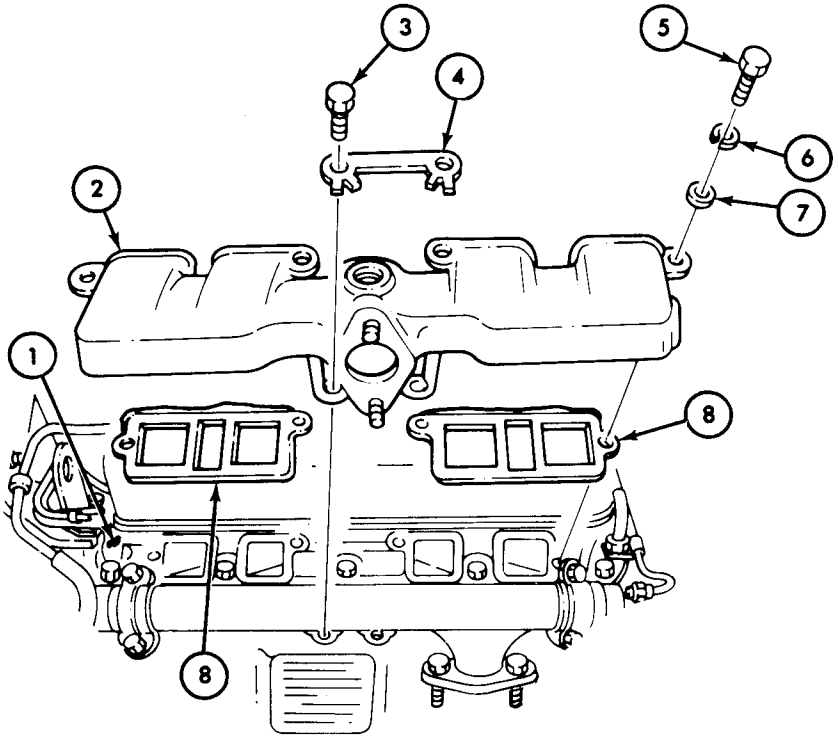

TA 157014

3-17. Installation of External Engine Components (Cont'd)

STEP NO.	LOCATION	ITEM	ACTION	REMARKS
n. VENT LINES				
36.		Distributor vent line (15)	Connect to rear of intake manifold (2).	
37.		Intake manifold adapter (12)	Install on intake manifold (2) and tighten.	
38.		Crankcase vent valve (11)	Install on intake manifold adapter (12) and tighten.	
39.		Rocker arm cover vent line (10)	Connect to rocker arm cover elbow (13) and crankcase vent valve (11) and tighten.	
40.		Carburetor vent line (14)	Connect to intake manifold adapter (12) and tighten.	
41.		Crankcase vent line (9)	Connect to intake manifold adapter (12) and tighten.	

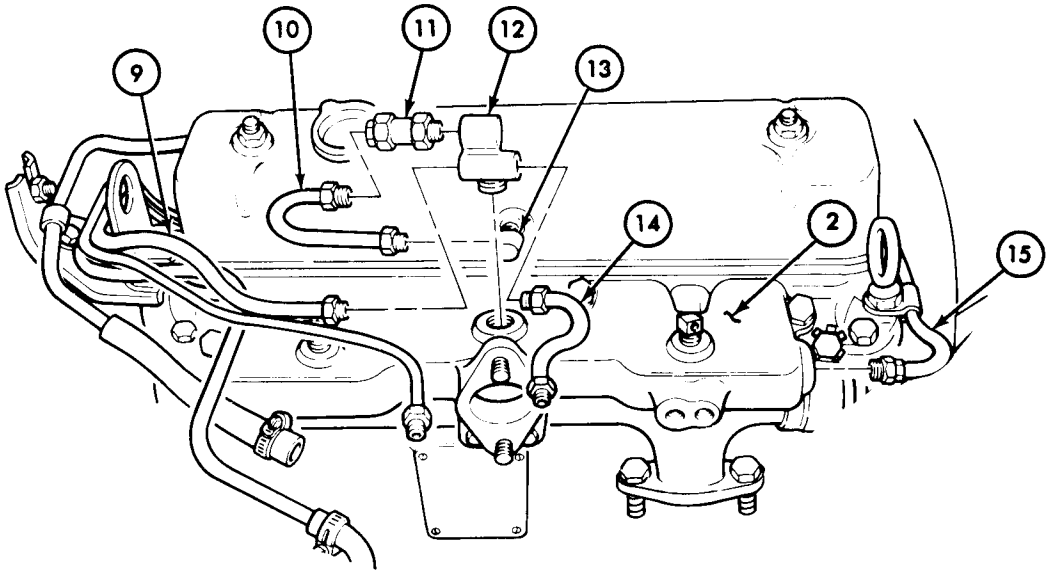

TA 157015

3-17. Installation of External Engine Components (Cont'd)

STEP NO.	LOCATION	ITEM	ACTION	REMARKS
42.		Crankcase vent line (3)	Connect to crankcase vent adapter (4) and tighten.	
43.		Distributor vent line (1) and clamp (7)	Secure at open hole in valve push rod cover (2) with new seal (5) and screw (6).	
44.		Two distributor vent hoses (8) and (1)	Connect to distributor elbow fittings (10) and secure with two clamps (9).	

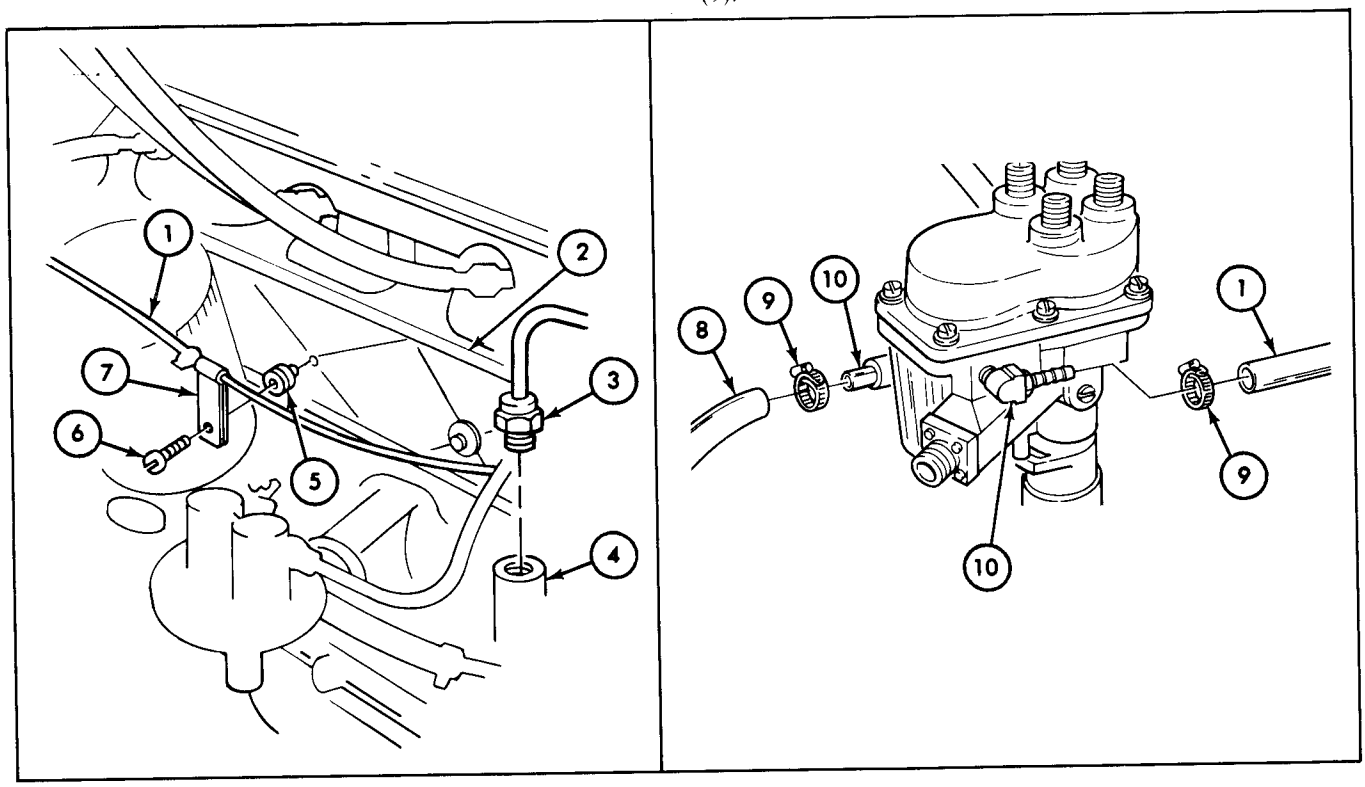

o. CARBURETOR AND BELLCRANK

45.		Accelerator bellcrank (15)	Secure to intake manifold (14) with two capscrew-assembled lockwashers (27).	Tighten 3-5 lb-ft (4-7 N•m).
46.		New gasket (17) and carburetor (19)	Place on intake manifold (14) and secure with throttle spring bracket (20), two flat washers (23), new lockwashers (22), and nuts (21).	Install throttle spring bracket (20) on lower mounting stud (26). Tighten nuts (21) 65-85 lb-in. (7-10 N•m).

TA 157016

3-17. Installation of External Engine Components (Cont'd)

STEP NO.	LOCATION	ITEM	ACTION	REMARKS
47.		Bellcrank rod (13)	Secure to carburetor (19).	
48.		Throttle return spring (16)	Connect to bellcrank (15) and throttle spring bracket (20).	
49.		Fuel supply line (11)	Connect to fuel filter (24) and secure with clamp (25).	
50.		Distributor vent line (1) and carburetor vent line (12)	Connect to carburetor ventilation line elbow fitting (18) and tighten.	

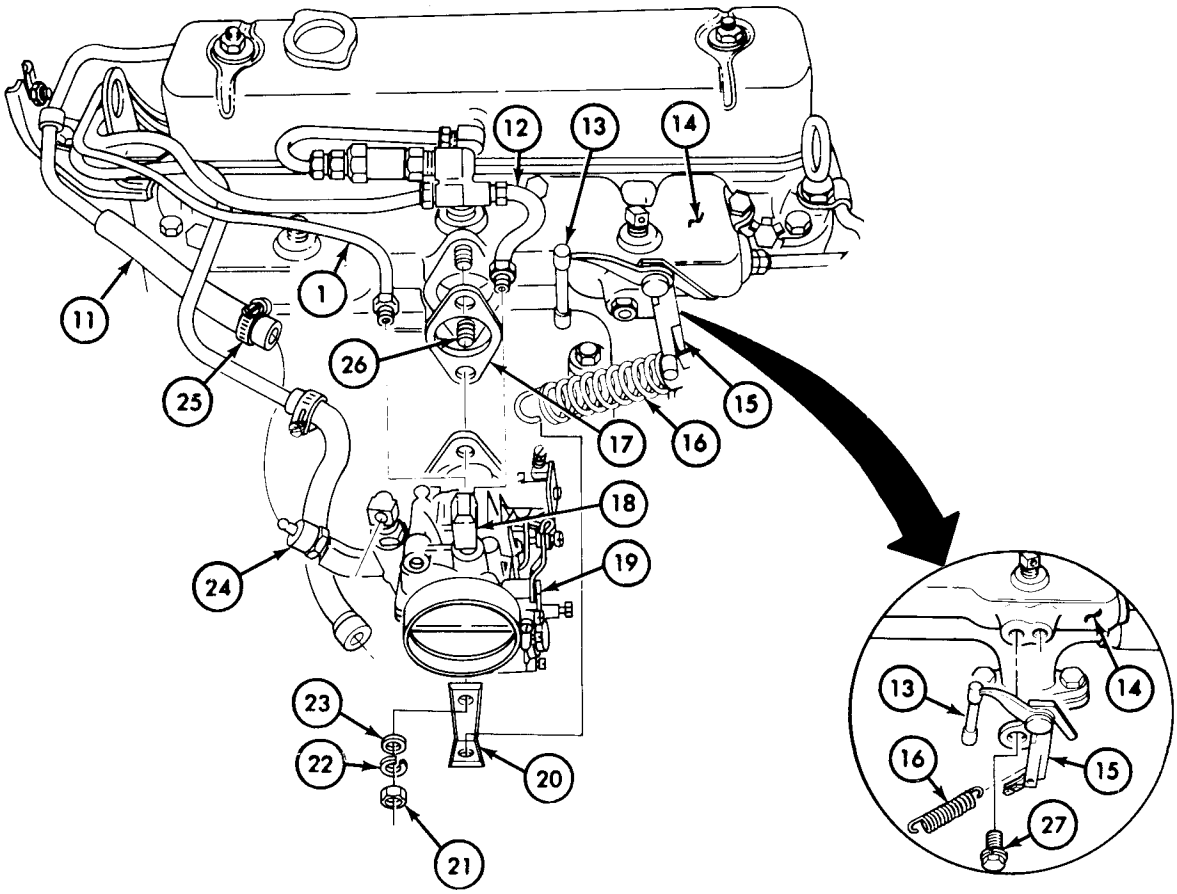

END OF TASK!

FOLLOW-ON TASK: Remove engine from repair stand (para 3-41).

TA 157017

Section V. GENERAL ENGINE REPAIR INSTRUCTIONS

3-18. General

This section provides general instructions for cleaning, inspection, and repair procedures assigned to direct and general support levels for the engine assembly.

3-19. General Cleaning Instructions

WARNING

- Drycleaning solvent is flammable and will not be used near an open flame. A fire extinguisher will be kept nearby when the solvent is used. Use only in well-ventilated places. Failure to do this may result in injury to personnel and/or damage to equipment.
- Compressed air source will not exceed 30 psi. When cleaning with compressed air, eyeshields must be worn. Failure to wear eyeshields may result in injury to the eyes and loss of sight.

a. General. The importance of cleaning must be understood thoroughly by all maintenance personnel. The presence of dirt or foreign substances is a constant threat to satisfactory engine repair. All parts must be cleaned before inspection, after repair, and before assembly. Protect all parts from accumulation of dust and grit after cleaning.

b. Castings and Metal Parts. The inner and outer surfaces of all castings and metal parts, subject to oil lubrication, must be cleaned with drycleaning solvent. Make sure all gasket material is removed from mounting surfaces. Give particular attention to oil passages in both castings and machined parts. Remove plugs, where necessary, and use wires or probes to break up all sludge or gum deposits to admit drycleaning solvent. Passages must be blown clean with compressed air to free them of all foreign particles.

c. Tapped Holes. Clean out tapped holes. Use correct size tap and take care to prevent cutting oversize. Blow out bolt holes with compressed air, making certain threads are clean. Dirt in threads may cause binding and result in false torque readings.

CAUTION

Drycleaning solvent, engine fuel, or lubricants coming in contact with rubber parts will cause deterioration.

d. Lines and Fittings. Soak lines and fittings in drycleaning solvent. Use wires or probes to remove stubborn deposits of foreign matter. Blow out with compressed air, making certain all passages are clear.

3-20. General Inspection Instructions

a. General. All parts, regardless of their application or use, must be examined and inspected carefully to determine whether they are to be re-used or replaced. The wear or damage of some parts will be evident to the eye, whereas in others, it will be necessary to use accurate precision equipment to determine fit and tolerances. Pertinent repair standards, together with points of measurement, are included with exploded views within this chapter. After parts are inspected, whether new or used, they must be coated lightly with preservative oil to ensure against rust.

b. Castings and Metal Parts. Inspect castings or forgings for cracks, nicks, burrs, and discoloration which indicate possible fluid leaks or high temperature. Pay particular attention to machined mounting surfaces and areas around bolt holes, tapped holes, bearing bores, and dowel pins. Test all questionable mounting surfaces with a straight edge or surface plate for evidence of warpage. Whenever available, a magnetic inspection process may be applied to all ferrous metal parts, especially on ground or highly finished surfaces. This process is not recommended for ball or roller bearings. The Zyglo inspection method, if available, may be employed for inspecting aluminum parts. Whenever any cast iron part is to be inspected for cracks, the following method can be used to determine presence and location of cracks:

(1) Clean part thoroughly in drycleaning solvent; then dry thoroughly.

(2) Immerse part in, or apply a coat of, mineral spirits paint thinner mixed with light oil. Dry part thoroughly with a clean cloth.

(3) Coat part immediately with a thin coat of zinc oxide powder mixed with wood alcohol. Wherever cracks are present, a brown discoloration will appear in the coating.

c. Tapped Holes, Studs, Screws, Nuts, and Dowel Pins. Inspect all tapped holes, studs, screws, and nuts for damaged threads. Examine dowel pins for evidence of damage and looseness.

d. Lines and Fittings. Inspect all lines and fittings for defects such as leaks, cracks, dents, and stripped threads. Minor dents or bends in metal lines may be straightened. Major dents, bends, or damage to lines or fittings require replacement of the damaged part.

e. Engine. Inspect engine oil pan for distortion, cracks, breaks, holes, elongation of bolt holes, and misalinement. Check drain plug for missing and stripped threads.

3-21. General Repair Instructions

a. General. The principal purpose of repair is to reclaim parts which would otherwise be scrapped.

b. Castings and Metal Parts. Replace any casting or forging showing cracks. Minor nicks, scratches, and burrs may be smoothed or removed with a fine stone or crocus cloth. Replace parts if damage cannot be corrected.

c. Tapped Holes, Studs, Screws, and Nuts. Minor damage to internal threads may be corrected with a tap; major damage requires replacement of the part. Minor thread damage on studs may be corrected with a thread die. Replace screws, bolts, studs, and nuts that have thread damage. Bolts, screws, and studs that are bent, or show evidence of stretch, must be replaced.

3-22. Repair Clearances, Wear Limits, and Torque Specifications

a. Clearances and Wear Limits.

(1) Data covering size of new parts and wear limit information is included with the exploded views within this chapter. These measurements list the minimum and maximum clearance of new or repaired parts.

(2) The wear limits indicate the dimensions to which a part may wear before it must be replaced. Normally, any part not worn beyond its wear limits will be satisfactory for service, provided it is not damaged by corrosion or similar causes. An asterisk (*) in the wear limit column indicates that the part should be replaced when worn beyond the limits stated in the size of new parts column.

(3) The letters "L" or "T" affixed to a dimension indicates a loose fit (clearance) or a tight fit (interference). The numbers following nomenclature are Army part numbers.

b. Torque Specifications. Torque specifications are provided within repair and assembly procedures.

Section VI. ENGINE SUBASSEMBLIES CLEANING, INSPECTION, AND REPAIR

3-23. General

This section provides instructions for disassembly, cleaning, inspection, repair, and reassembly procedures of engine subassemblies assigned to direct and general support levels. To locate a specific procedure within this section, see the engine subassemblies cleaning, inspection, and repair task summary. See section VII for repair and replacement standards of engine components.

3-24. Engine Subassemblies Cleaning, Inspection, and Repair Task Summary

3-24. Engine Subassemblies Cleaning, Inspection, and Repair Task Summary (Cont'd)

TASK PARA.	PROCEDURES	PAGE NO.
3-32.	Oil Pump and Strainer Repair a. Disassembly b. Cleaning and Inspection c. Repair d. Reassembly	3-156
3-33.	Timing Gear Cover Repair a. Disassembly b. Cleaning and Inspection c. Repair d. Reassembly	3-164
3-34.	Valve Push Rod Cover Repair a. Cleaning and Inspection b. Repair	3-167
3-35.	Fan Blade, Water Pump, and Pulley Cleaning and Inspection Cleaning and Inspection	3-169
3-36.	Intake and Exhaust Manifolds Repair a. Cleaning and Inspection b. Repair	3-172

3-25. Cylinder Head Repair

This task covers:

a. Disassembly
b. Cleaning and Inspection
c. Repair
d. Reassembly

INITIAL SETUP:

Applicable Models	Equipment Condition Reference	Condition Description
All	Para 3-15	Cylinder head removed.

Test Equipment

Valve seat dial gage
Valve spring tension gage

Special Tools

Inside micrometer
Surface gage
Valve face runout gage
Expansion plug replacer tool
Valve spring compressing tool
Valve guide cleaner
Slide hammer puller
Feeler gage

Special Environmental Conditions

Clean, well-ventilated work area.

Materials/Parts

GAA grease
Sealer (NSN 8030-00-543-4834)
Prussian blue (NSN 8010-00-247-8706)
Sixteen valve locks
Four valve stem seals
Expansion plug

Personnel Required

One mechanic

General Safety Instructions

None

Manual References

TM 9-2320-218-34P

STEP NO.	LOCATION	ITEM	ACTION	REMARKS
		NOTE		
		Intake valves are numbered 2-3-6-7 beginning at front of cylinder head (3).		
		a. DISASSEMBLY		
1.	Rear lifting eye (1) and clip (2) to cylinder head (3)	Locknut (4)	Loosen.	
2.		Rear lifting eye (1) and clip (2)	Remove from cylinder head (3).	Locknut (4) will remain attached to lifting eye (1).

3-25. Cylinder Head Repair (Cont'd)

STEP NO.	LOCATION	ITEM	ACTION	REMARKS
3.	Engine lifting bracket (6) and radiator support bracket (5) to cylinder head (3)	Two capscrews (7)	Remove.	
4.		Engine lifting bracket (6) and radiator support bracket (5)	Remove from cylinder head (3).	

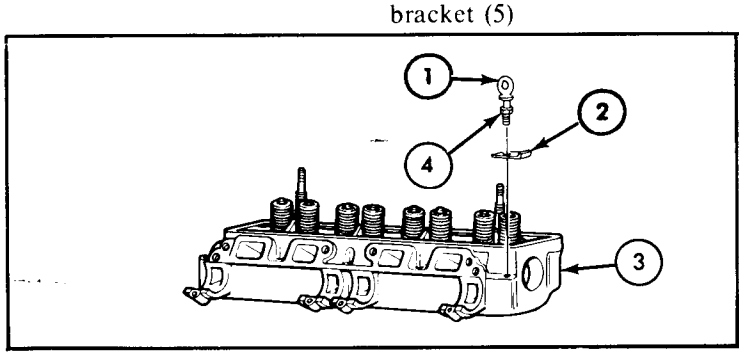

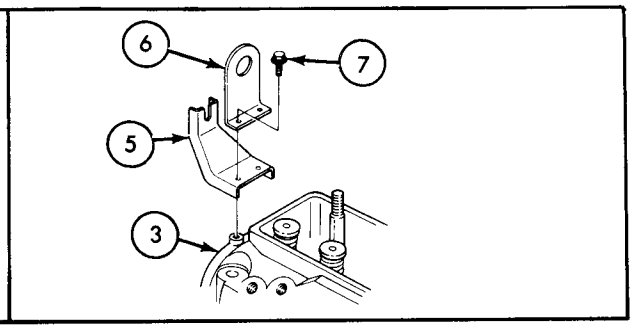

5.	Intake valve (10)	Two valve stem locks (8) and one valve spring sleeve (9)	Remove.	Use valve spring compressing tool (11). Identify sleeve (9) so it can be installed with the same valve (10). Discard valve stem locks (8).
6.		Spring seat (12), valve spring (13), and valve stem seal (14)	Remove.	Identify spring (13) and seat (12) so they can be installed with the same valve (10). Discard seal (14).
7.		Intake valve (10)	Slide out and remove from cylinder head (3).	Identify valve (10) so it can be installed in the same valve guide in cylinder head (3). Remove remaining three intake valves (10) using the same procedure.

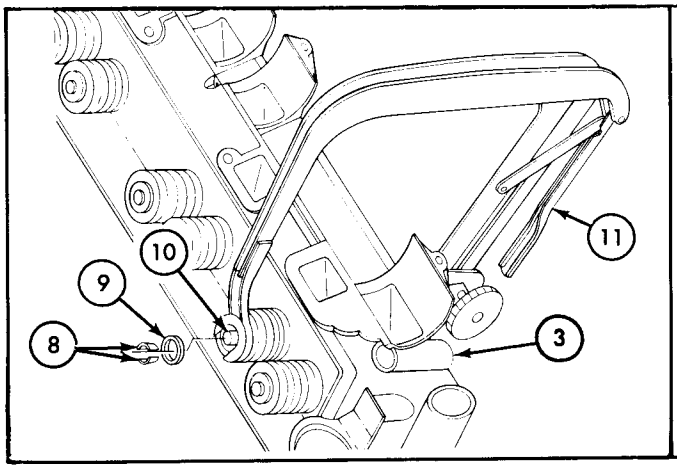

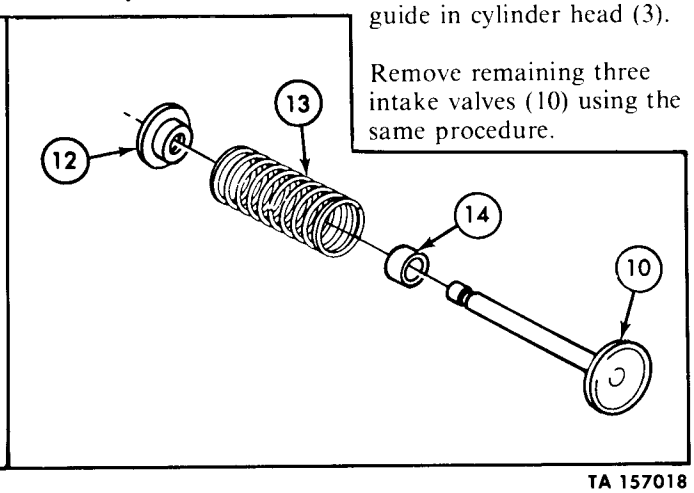

TA 157018

3-25. Cylinder Head Repair (Cont'd)

STEP NO.	LOCATION	ITEM	ACTION	REMARKS
		NOTE		
		Exhaust valves are numbered 1-4-5-8 beginning at front of cylinder head (2).		
8.	Exhaust valve (3)	Two valve stem locks (4)	Remove.	Use valve spring compressing tool (1). Discard valve stem locks (4).
9.		Spring retainer (5) and valve spring (6)	Remove.	Identify spring (6) and retainer (5) so they can be installed with the same valve (3).
10.		Exhaust valve (3)	Slide out and remove from cylinder head (2).	Identify valve (3) so it can be installed in the same valve guide in cylinder head (2). Remove remaining three exhaust valves (3) using the same procedure.

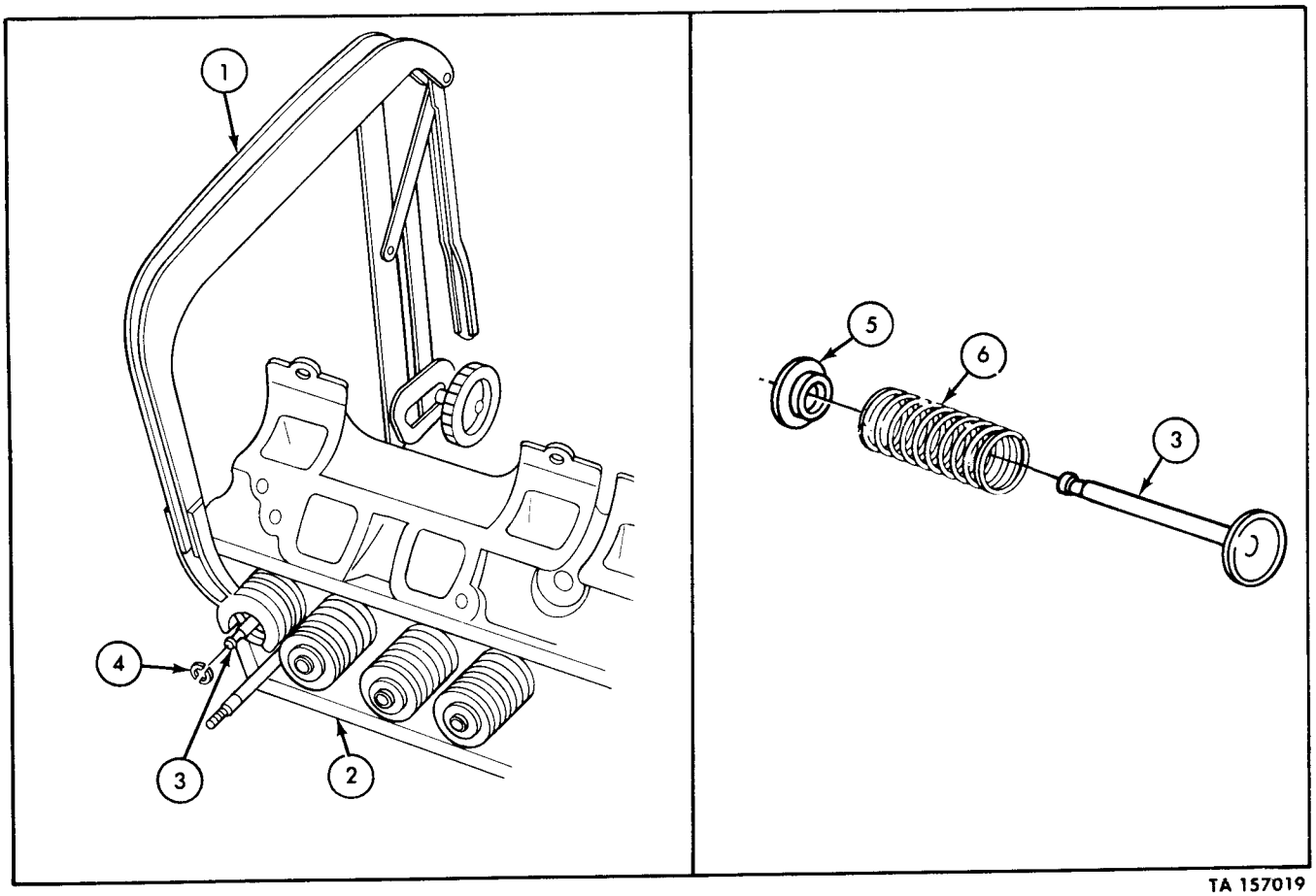

TA 157019

3-25. Cylinder Head Repair (Cont'd)

STEP NO.	LOCATION	ITEM	ACTION	REMARKS
11.	Top of cylinder head (2)	Two rocker arm assembly support studs (7)	Remove.	
12.	Rear of cylinder head (2)	Coolant expansion plug (8)	Remove as follows:	
			a. Drill 1/2 in. (12.7 mm) hole in center of plug (8).	
			b. Insert puller (9) into drilled hole and remove plug (8).	Use slide hammer puller (9). Discard plug (8).

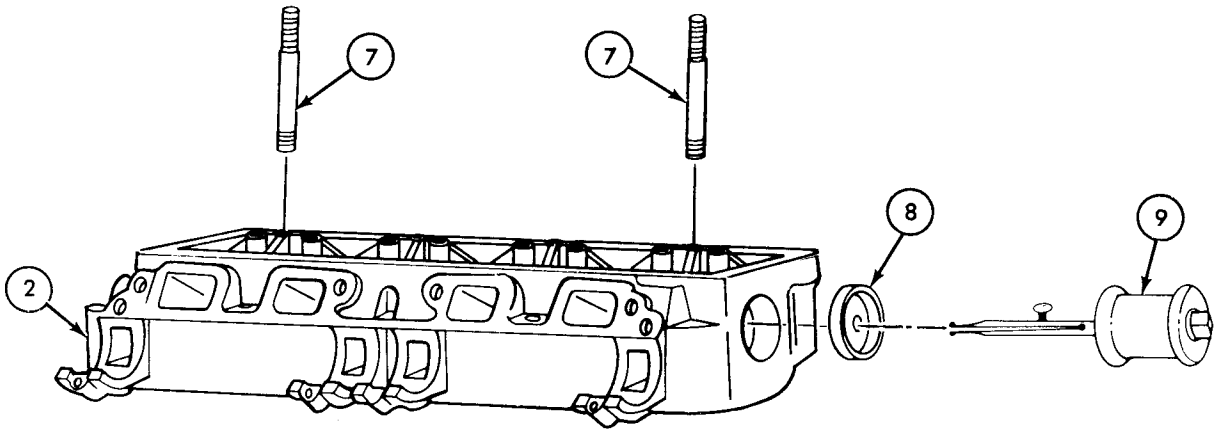

TA 157020

3-25. Cylinder Head Repair (Cont'd)

STEP NO.	LOCATION	ITEM	ACTION	REMARKS
	b. CLEANING AND INSPECTION			
13.		Cylinder head (1), intake valves (5), intake valve seats (3), intake valve sleeves (2), exhaust valves (7), exhaust valve retainers (6), and valve springs (4)	Clean in accordance with instructions in paragraph 3-19.	

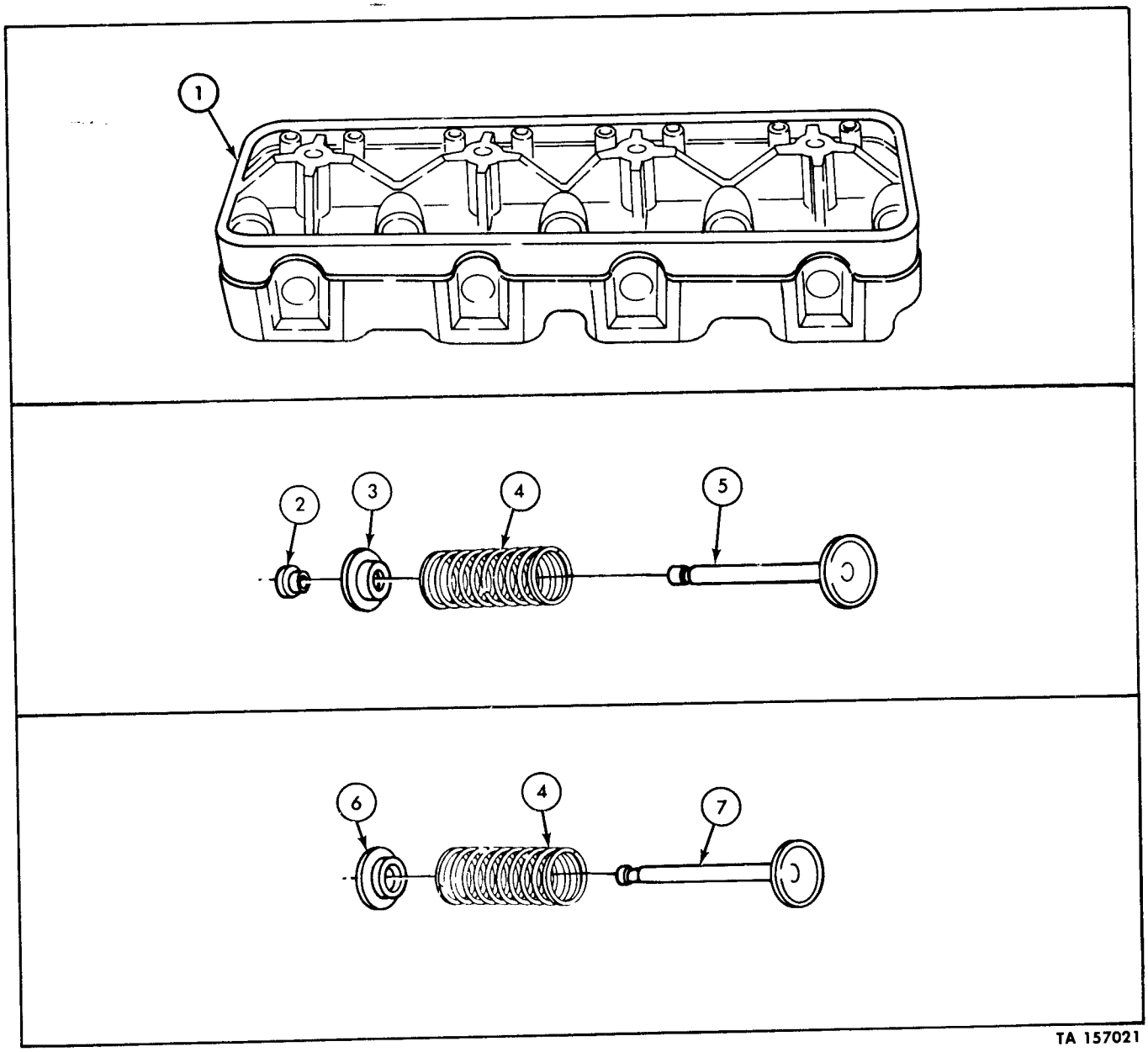

TA 157021

3-25. Cylinder Head Repair (Cont'd)

STEP NO.	LOCATION	ITEM	ACTION	REMARKS
	b. CLEANING AND INSPECTION			
13.		Cylinder head (1), intake valves (5), intake valve seats (3), intake valve sleeves (2), exhaust valves (7), exhaust valve retainers (6), and valve springs (4)	Clean in accordance with instructions in paragraph 3-19.	

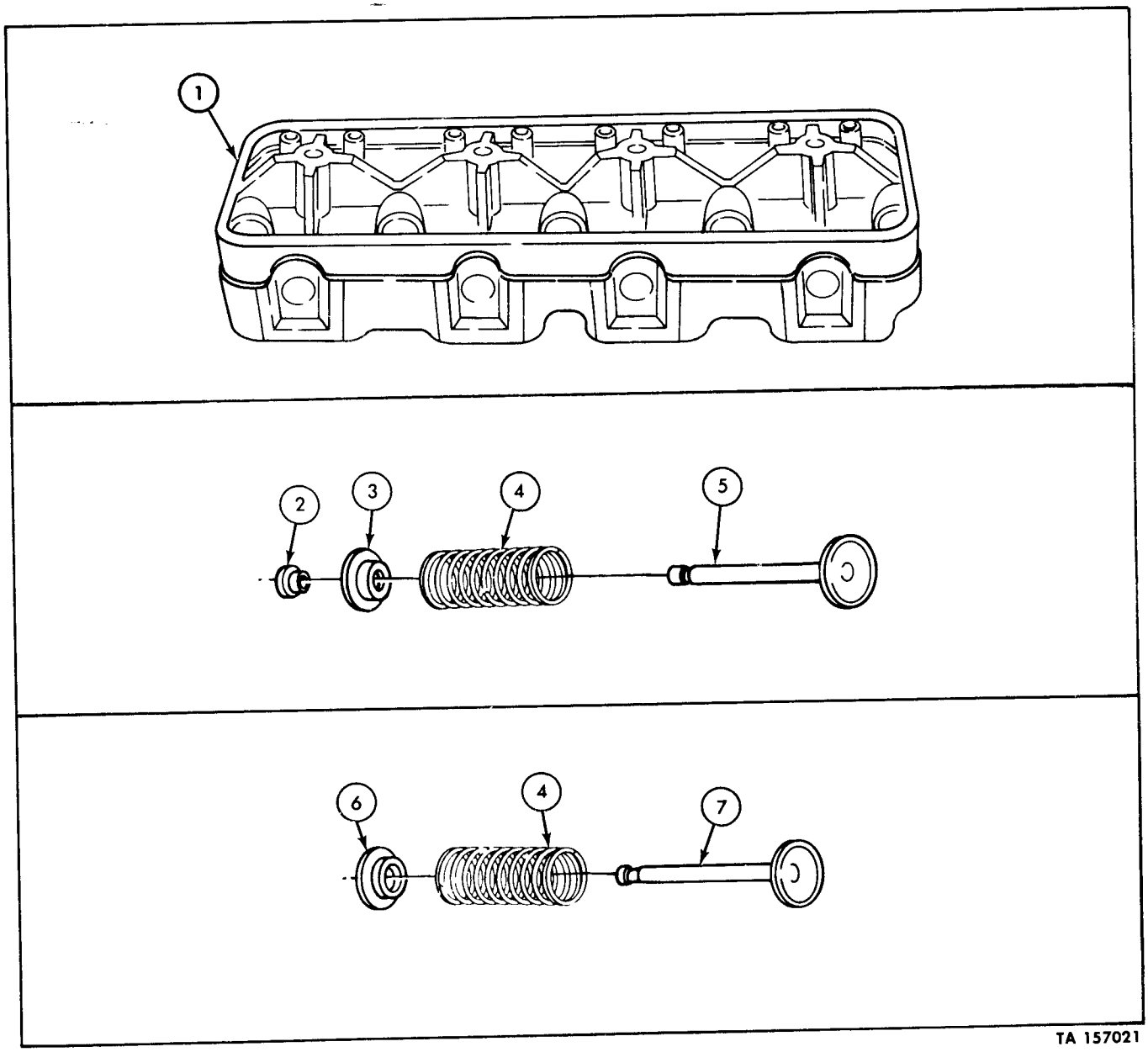

TA 157021

3-25. Cylinder Head Repair (Cont'd)

STEP NO.	LOCATION	ITEM	ACTION	REMARKS
		NOTE		
		Refer to paragraph 3-20 for general inspection procedures.		
14.		Cylinder head (1)	*a.* Inspect for cracks, breaks, distortion, pitting, chips, stripped threads, uneveness, and wear.	Replace cylinder head (1) if cracked, broken, distorted, pitted, chipped, threads stripped, uneven , or worn (see table 3-3 for specifications).
			b. Check for uneveness by sliding a feeler gage (9) between surface gage (8) and cylinder head (1) diagonally and across center.	Replace if warped beyond tolerance (see table 3-3 for specifications).
			c. Repeat uneveness check across opposite diagonal.	
15.		Eight valve seats (11)	Check for burns, cracks, pits, and out-of-roundness.	Use valve seat dial gage (10). Maximum out-of-round or runout is .002 in. (.051 mm). Reface if burned, cracked, pitted, or out-of-round.

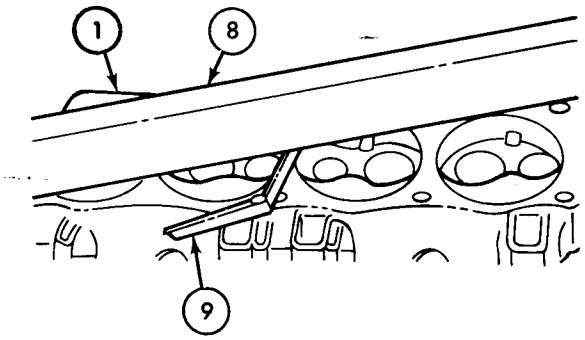

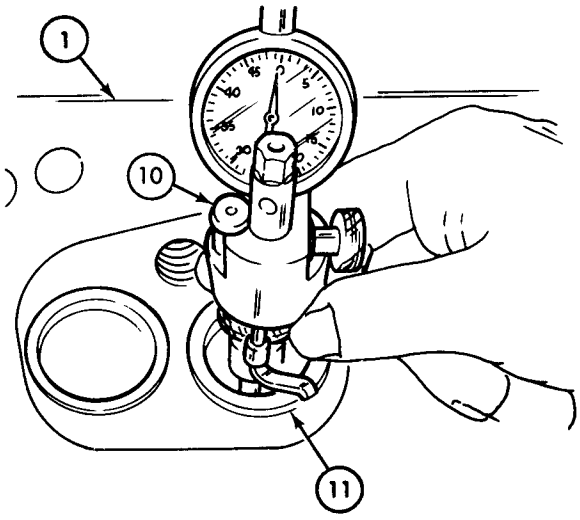

TA 157022

3-25. Cylinder Head Repair (Cont'd)

STEP NO.	LOCATION	ITEM	ACTION	REMARKS
16.	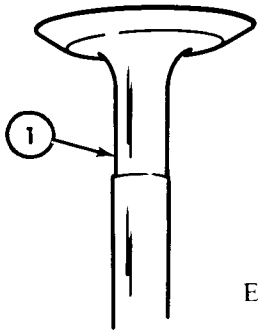	Eight valves (1)	Inspect for bends, sharp edges, out-of-roundness, cracks, burns, and wear.	Replace valves (1) if bent, cracked, sharp edged, out of round, burned, or worn (see table 3-3 for specifications). Use valve face runout gage.
17.	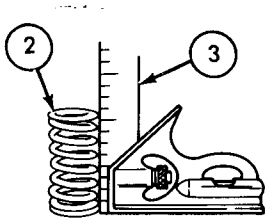 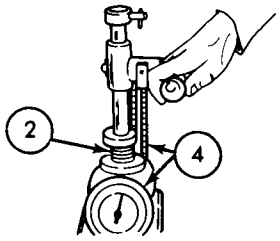	Eight valve springs (2)	*a.* Inspect for cracks, breaks, broken coils, twisted coils, distortion, and wear. *b.* Check for loss of tension by measuring height dimensions (3). *c.* Check spring (2) pressure.	Replace if coils are cracked, broken or twisted, distorted, or worn. Replace if spring height (3) is not within specifications (see table 3-3). Use valve spring tester (4). Replace if spring (2) cannot hold correct load under pressure (see table 3-3 for specifications).
18.	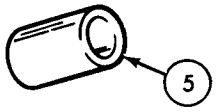	Four exhaust valve stem caps (5)	Inspect for cracks, breaks, and wear.	Replace if cracked, broken, or worn (see table 3-3 for wear limits).
19.	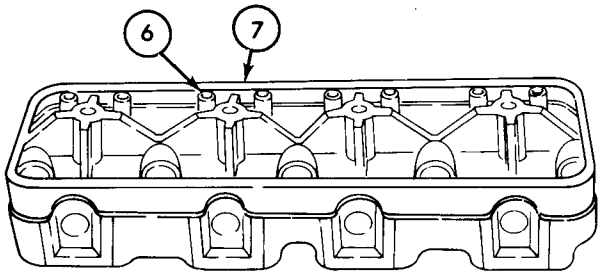	Eight valve guides (6)	Inspect for out-of-roundness, cracks, breaks, wear, and deformed condition.	Use small inside bore telescopic micrometer. Replace cylinder head (7) if guides (6) are out-of-round, cracked, broken, worn, or deformed (see table 3-3 for specifications).

TA 157023

3-25. Cylinder Head Repair (Cont'd)

STEP NO.	LOCATION	ITEM	ACTION	REMARKS
	c. REPAIR			
20.	Cylinder head (7)	Eight valve guides (6)	Remove carbon from internal bores.	Use valve guide cleaner (8).
21.		Valve seats (9)	Reface and match valve face as follows:	
			a. Grind valve seat (9) to a 44°-45° angle.	Remove only enough material to clean up pits, grooves, and to correct valve seat runout (see table 3-3 for specifications).
			b. Measure seat (9) width.	See table 3-3 for specifications.
			c. If seat (9) width exceeds specifications, remove stock from bottom edge or top edge of seat (9) to reduce width.	Use a 130° angle grinding wheel to remove stock from bottom of seat (9) (raising the seat) and a 30° angle grinding wheel to remove stock from top of of seat (9) (lowering the seat).
			d. Coat seat (9) with Prussian blue.	
			e. Rotate valve on seat (9) with light pressure.	Blueing should indicate 100% contact between seat (9) and center of valve face. If blue is transferred to top edge of valve face, lower valve seat (9). If blue is transferred to bottom edge of valve face, raise valve seat (9).
			f. Repeat steps *a* through *e* until 100% valve to seat contact is obtained.	

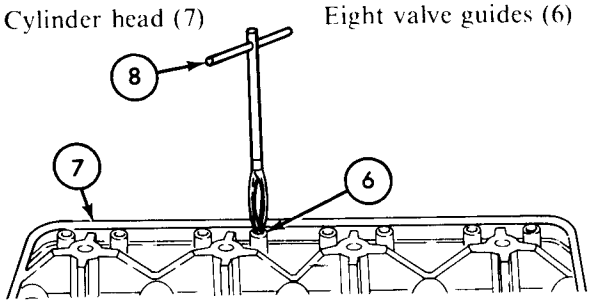

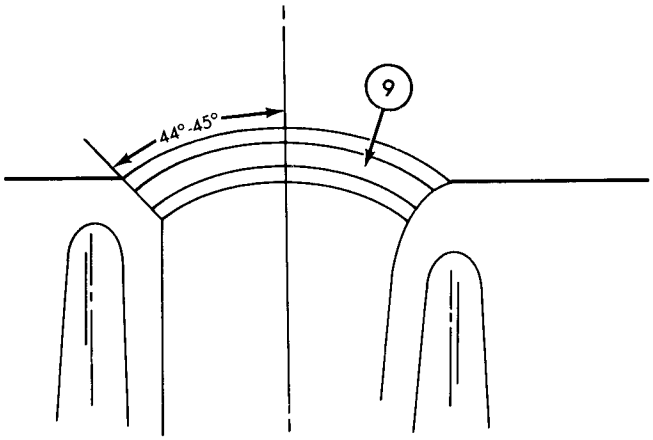

TA 157024

3-25. Cylinder Head Repair (Cont'd)

STEP NO.	LOCATION	ITEM	ACTION	REMARKS
d. REASSEMBLY				
22.		Intake valve (5)	Install in cylinder head (6).	Install valve (5) in location where match-faced to seat.
23.		Spring (3), seat (2), sleeve (1), and new valve stem seal (4)	Place on intake valve (5) stem.	Install spring (3) with close-wound coils toward cylinder head (6).
24.		Valve spring (3)	Compress and install two new valve stem locks (8) on end of valve (5).	Use valve spring compressor (7).
25.		Valve spring compressor (7)	Remove.	Make sure valve locks (8) stay in place.
				Repeat steps 22-25 to install remaining three intake valves (5).

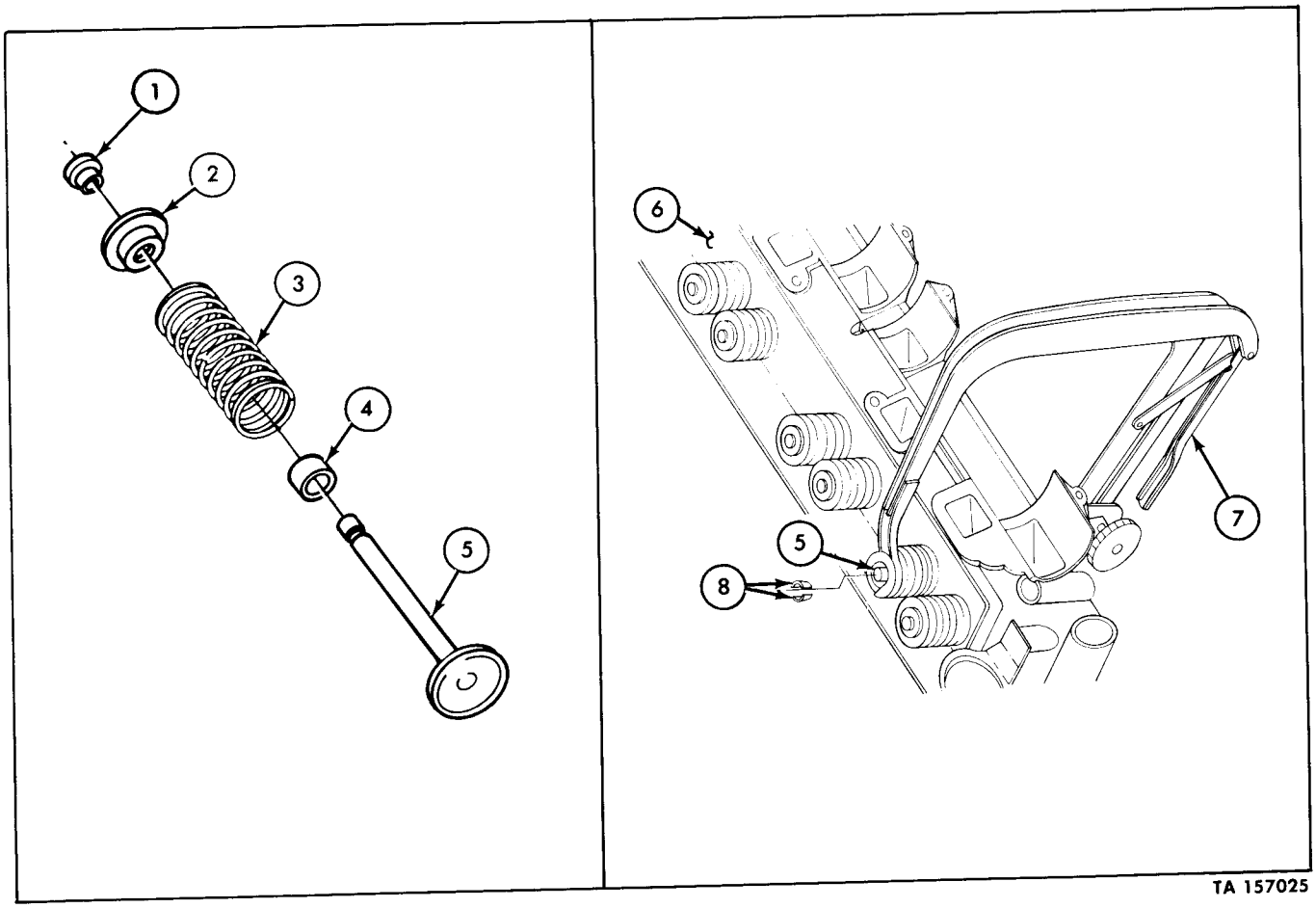

TA 157025

3-25. Cylinder Head Repair (Cont'd)

STEP NO.	LOCATION	ITEM	ACTION	REMARKS
26.		Exhaust valve (11)	Install in cylinder head (6).	Install valve (11) in location where match-faced to seat.
27.		Valve spring (10) and retainer (9)	*a.* Place on exhaust valve (11) stem.	Install spring (10) with close-wound coils toward cylinder head (6).
			b. Compress spring (10).	Use valve spring compressor (7).
28.		Two new valve stem locks (12)	Install on end of valve (11).	Use GAA grease to hold in in place.
29.		Valve spring compressor (7)	Remove.	Make sure valve locks (12) stay in place.
				Repeat steps 26-29 to install remaining three exhaust valves (11).

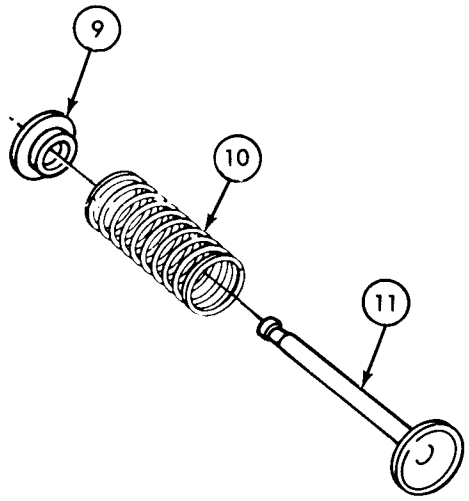

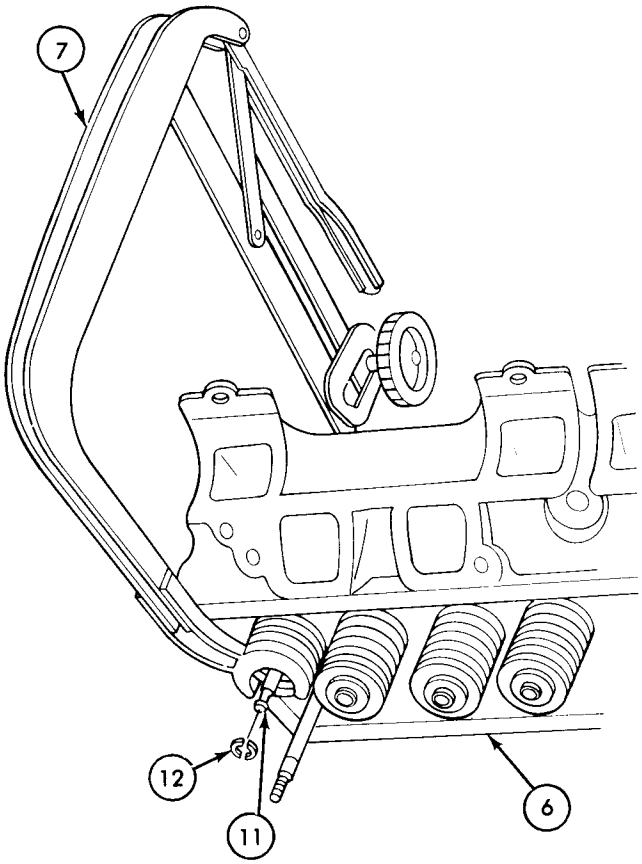

TA 157026

3-25. Cylinder Head Repair (Cont'd)

STEP NO.	LOCATION	ITEM	ACTION	REMARKS
30.		Valve spring (6)	Measure spring assembled height as follows:	
			a. Measure from underside of spring retainer (5) to surface (3) of cylinder head (1).	Use 6 in. (152.4 mm) scale (4). Height must be 1.821 in. (46.25 mm).
			b. Install spacers between cylinder head surface (3) and bottom of spring (6) if spring height exceeds limits.	Use .030 in. (.76 mm) spacers. Replace valve (2) or head (1) if more than three spacers are required.

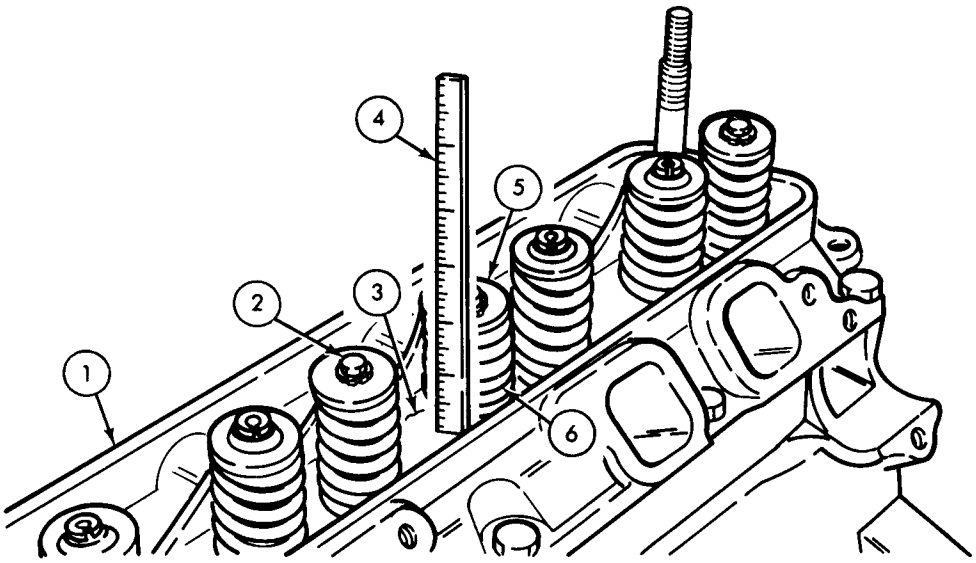

TA 157027

3-25. Cylinder Head Repair (Cont'd)

STEP NO.	LOCATION	ITEM	ACTION	REMARKS
31.		Two rocker arm assembly support studs (7)	*a.* Lightly coat threads (8) with sealer.	
			b. Install in cylinder head (1) stud holes.	
32.		New coolant expansion plug (10)	*a.* Lightly coat mating surface with sealer.	
			b. Place on expansion plug replacer tool (11).	Cup side of plug (10) faces out.
			c. Install in bore (9).	Flange of tool (11) will stop at surface of head (1).

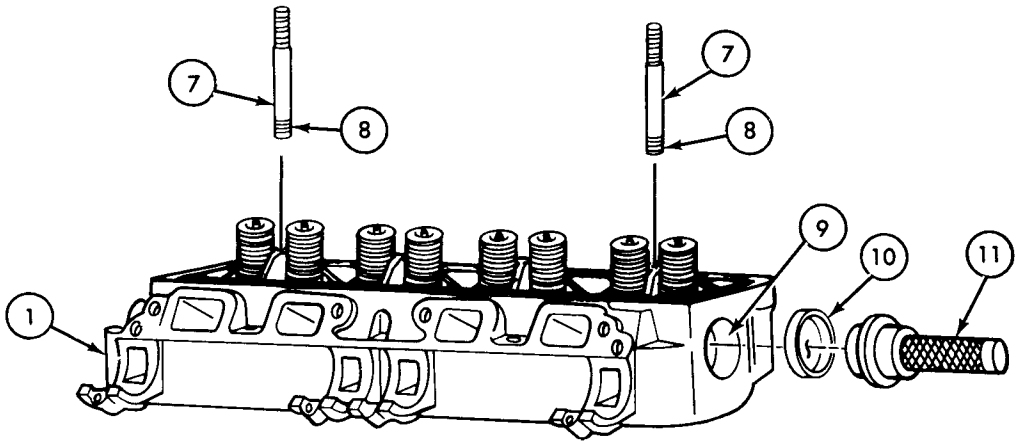

END OF TASK!

FOLLOW-ON TASK: Install cylinder head assembly (para 3-16).

TA 157028

3-26. Rocker Arm Shaft Assembly and Push Rod Repair

This task covers:

a. Disassembly
b. Cleaning and Inspection
c. Reassembly

INITIAL SETUP:

Applicable Models	Equipment Condition Reference	Condition Description
All	Para 3-15	Rocker arm assembly removed.

Test Equipment
None

Special Tools
Inside micrometer
Outside micrometer
Torque wrench (0-175 lb-ft)

Special Environmental Conditions
Clean, well-ventilated work area.

Materials/Parts
Two cotter pins

Personnel Required
One mechanic

General Safety Instructions
None

Manual References
TM 9-2320-218-34P

STEP NO.	LOCATION	ITEM	ACTION	REMARKS
	a. DISASSEMBLY			
1.	Rocker arm shaft (8)	Two cotter pins (1)	Remove.	Discard cotter pins (1).
2.	Rocker arm shaft (8)	Four flat washers (2), and two spring washers (3)	Remove.	
3.		Eight rocker arms (4), four rocker arm shaft supports (6), and three rocker arm locating springs (7)	Slide from rocker arm shaft (8).	Identify so parts can be installed at the same position.

3-26. Rocker Arm Shaft Assembly and Push Rod Repair (Cont'd)

STEP NO.	LOCATION	ITEM	ACTION	REMARKS
4.	Eight rocker arms (4)	Eight rocker arm adjusting screws (5)	*a.* Check torque required to move adjusting screws (5).	Replace adjusting screws (5) that move when 5 lb-ft (7 N•m) or less torque is applied. Replace rocker arm (4) if new screw(s) moves when 5 lb-ft (7 N•m) or less torque is applied.
			b. Remove.	
	b. CLEANING AND INSPECTION			
5.		Four flat washers (2), two spring washers (3), eight rocker arms (4), eight rocker arm adjusting screws (5), four supports (6), three springs (7), and rocker arm shaft (8)	Clean in accordance with instructions in paragraph 3-19.	

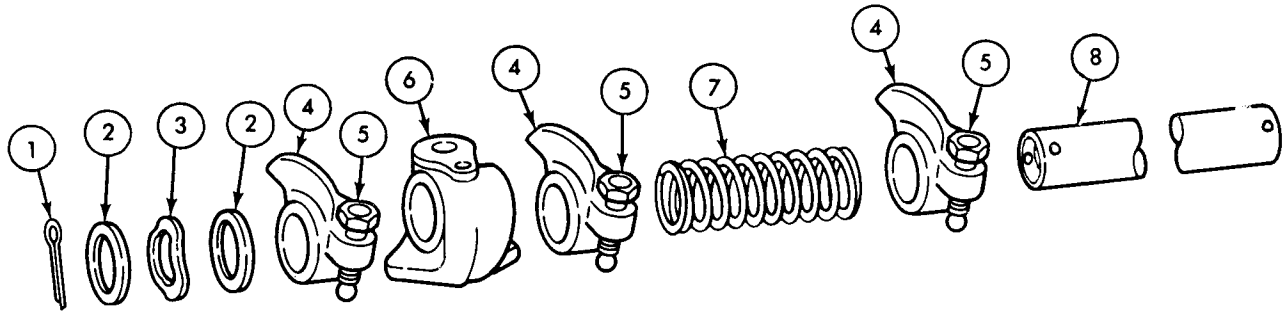

TA 157029

3-26. Rocker Arm Shaft Assembly and Push Rod Repair (Cont'd)

STEP NO.	LOCATION	ITEM	ACTION	REMARKS
		NOTE Refer to paragraph 3-20 for general inspection instructions.		
6.	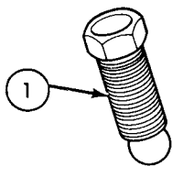	Eight rocker arm adjusting screws (1)	*a.* Check for stripped and broken threads.	Replace if threads are stripped or broken.
			b. Check the ball end for breaks, cracks, severe nicks, scratches, and excessive wear.	Replace if ball is broken, cracked, severely nicked, scratched, or worn.
7.	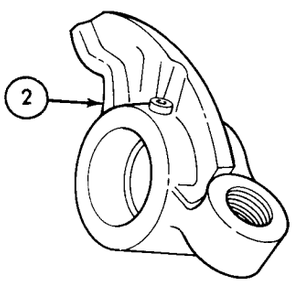	Eight rocker arms (2)	*a.* Check for breaks, cracks, distortion, nicks, scratches, scores, and scuffing.	Replace if cracked, broken, distorted, nicked, scratched, scored, or scuffed.
			b. Check for stripped and broken threads.	Replace if threads are broken or stripped.
			c. Inspect for plugged oil passages.	Open oil passages or replace if passages cannot be opened.
			d. Check for clearances and tolerances.	Use inside bore micrometer (see table 3-4 for specifications).
8.	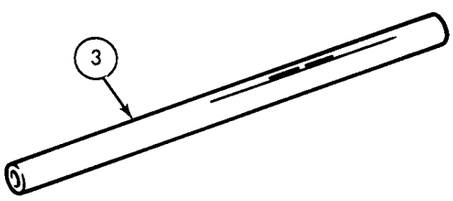	Rocker arm shaft (3)	*a.* Check for cracks, breaks, twists, nicks, scratches, scoring, and wear.	Repair minor nicks, scratches, or score marks (para 3-21). Replace if cracked, broken, twisted, deeply nicked, scratched, scored, or worn.
			b. Inspect expansion plugs for holes and damage.	Replace rocker arm shaft if expansion plugs are defective.
			c. Inspect for plugged oil passages.	Open oil passages or replace if passages cannot be opened.
			d. Check for tolerances and clearances.	Use outside micrometer (see table 3-4 for specifications).

TA 157030

3-26. Rocker Arm Shaft Assembly and Push Rod Repair (Cont'd)

STEP NO.	LOCATION	ITEM	ACTION	REMARKS
9.		Rocker arm shaft supports (4)	*a.* Inspect for cracks and breaks.	Replace if cracked or broken.
			b. Inspect for plugged oil passages.	Open oil passages or replace if passage cannot be opened.
10.	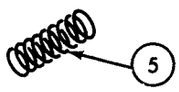	Three rocker arm locating springs (5)	Check for weak, broken, distorted, or worn coils.	Replace if coils are broken, worn, weak, or distorted (see table 3-4 for specifications).
11.	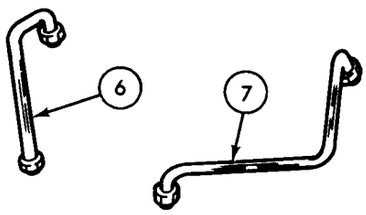	Oil inlet line (6) and oil return line (7)	Check for cracks, breaks, sharp bends, and holes.	Replace if cracked, broken, bent sharply, or has holes.
12.	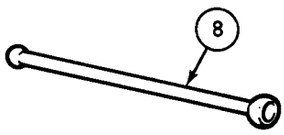	Eight push rods (8)	*a.* Check for straightness.	Replace if not straight.
			b. Check the ball end and socket end for nicks, grooves, roughness, and excessive wear.	Replace if nicked, grooved, rough, or worn (see table 3-4 for specifications).
13.	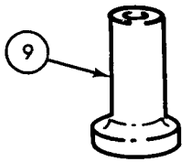	Eight valve tappets (9)	Check for breaks, cracks, roughness, and wear.	Use inside micrometer and outside micrometer.
				Replace if broken, cracked, rough, or worn (see table 3-4 for specifications).

TA 157031

3-26. Rocker Arm Shaft Assembly and Push Rod Repair (Cont'd)

STEP NO.	LOCATION	ITEM	ACTION	REMARKS
c. REASSEMBLY				
14.		Rocker arm valve adjusting screw (2)	*a.* Install in rocker arm (1). *b.* Turn until thread resistance is noticed.	Install all eight adjusting screws (2) using the same procedure.
15.		Eight rocker arms (1), three rocker arm locating springs (7), and four rocker arm shaft supports (6)	Slide on shaft (8).	Center and place parts in identified positions. All parts will be centered during installation (refer to para. 3-16).

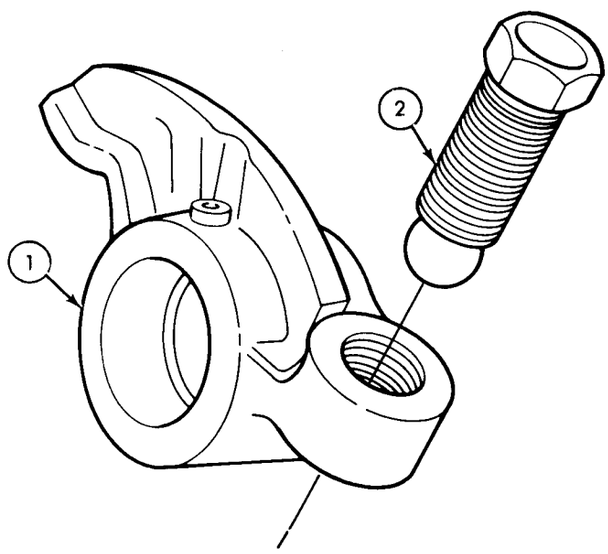

TA 157032

3-26. Rocker Arm Shaft Assembly and Push Rod Repair (Cont'd)

STEP NO.	LOCATION	ITEM	ACTION	REMARKS
16.		Four flat washers (4) and two spring washers (5)	Install and secure with two new cotter pins (3).	

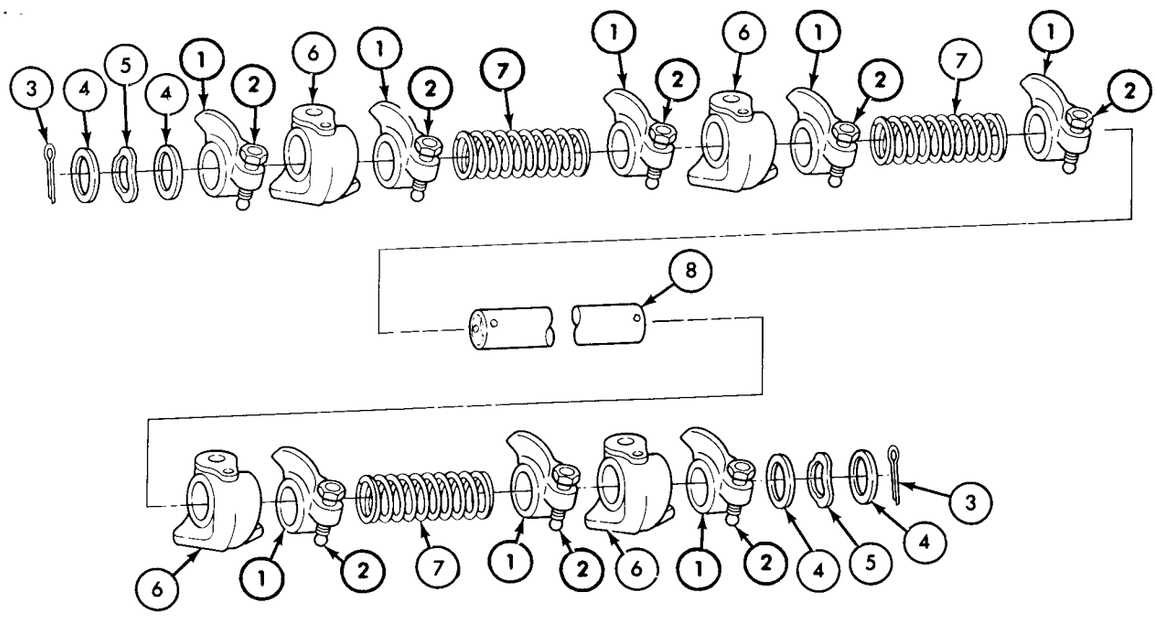

END OF TASK!

FOLLOW-ON TASK: Install rocker arm shaft assembly (para 3-16).

TA 157033

3-27. Cylinder Block Repair

This task covers:

a. Disassembly
b. Cleaning and Inspection
c. Repair
d. Reassembly

INITIAL SETUP:

Applicable Models	Equipment Condition Reference	Condition Description
All	Para 3-15	Engine disassembled.

Test Equipment

Cylinder taper gage
Large inside micrometer

Special Tools

Slide hammer puller
Camshaft bearing remover and replacer
Fine honing stone
Expansion plug replacer

Special Environmental Conditions

Clean, well-ventilated work area.

Materials/Parts

Sealer (NSN 8030-00-543-4384)
OE/HDO oil
Three camshaft bearings
Four expansion plugs
Clutch release rod seal retainer
Oil level indicator tube
Distributor gear oil tube
Six dowel pins

Personnel Required

One mechanic

General Safety Instructions

None

Manual References

TM 9-2320-218-34P

STEP NO.	LOCATION	ITEM	ACTION	REMARKS
	a. DISASSEMBLY			
1.	Left side (5) and rear (4) of cylinder block (6)	Three coolant expansion plugs (3)	Remove as follows:	
			a. Drill 1/2 in. (12.7 mm) hole (2) in center of each expansion plug (3).	
			b. Insert puller (1) in drilled hole (2) and remove plugs (3).	Use slide hammer puller (1). Discard plugs (3).

3-27. Cylinder Block Repair

This task covers:

a. Disassembly
b. Cleaning and Inspection
c. Repair
d. Reassembly

INITIAL SETUP:

Applicable Models	Equipment Condition Reference	Condition Description
All	Para 3-15	Engine disassembled.

Test Equipment

Cylinder taper gage
Large inside micrometer

Special Tools

Slide hammer puller
Camshaft bearing remover and replacer
Fine honing stone
Expansion plug replacer

Special Environmental Conditions

Clean, well-ventilated work area.

Materials/Parts

Sealer (NSN 8030-00-543-4384)
OE/HDO oil
Three camshaft bearings
Four expansion plugs
Clutch release rod seal retainer
Oil level indicator tube
Distributor gear oil tube
Six dowel pins

Personnel Required

One mechanic

General Safety Instructions

None

Manual References

TM 9-2320-218-34P

STEP NO.	LOCATION	ITEM	ACTION	REMARKS
	a. DISASSEMBLY			
1.	Left side (5) and rear (4) of cylinder block (6)	Three coolant expansion plugs (3)	Remove as follows:	
			a. Drill 1/2 in. (12.7 mm) hole (2) in center of each expansion plug (3).	
			b. Insert puller (1) in drilled hole (2) and remove plugs (3).	Use slide hammer puller (1). Discard plugs (3).

3-27. Cylinder Block Repair (Cont'd)

STEP NO.	LOCATION	ITEM	ACTION	REMARKS

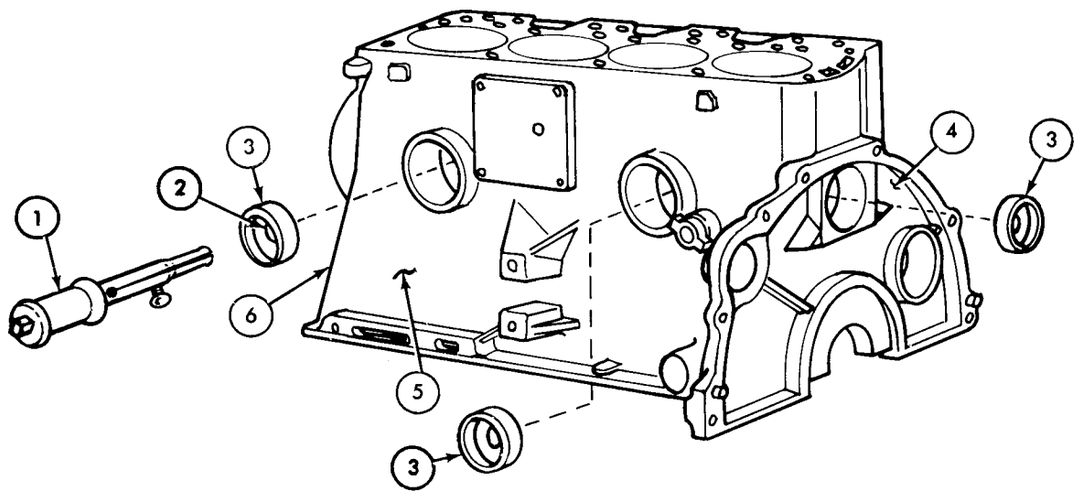

2.	Rear (4) of cylinder block (6)	Camshaft bearing expansion plug (7)	Remove as follows:	
			a. Drill 1/2 in. (12.7 mm) hole (8) in center of plug (7).	
			b. Insert puller (1) into drilled hole (8) and remove plug (7).	Use slide hammer puller (1). Discard plug (7).

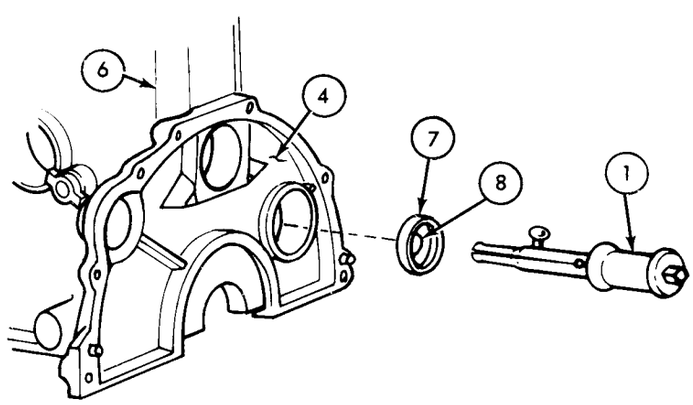

TA 157034

3-27. Cylinder Block Repair (Cont'd)

STEP NO.	LOCATION	ITEM	ACTION	REMARKS
3.	Rear (3) of cylinder block (1)	Clutch release rod seal retainer (4)	Remove by driving out from rear towards front.	Discard retainer (4).
4.	Left side (2) of cylinder block (1)	Draincock (5)	Remove.	
5.	Front (7) of cylinder block (1)	Crankcase ventilation connector fitting (6)	Remove.	

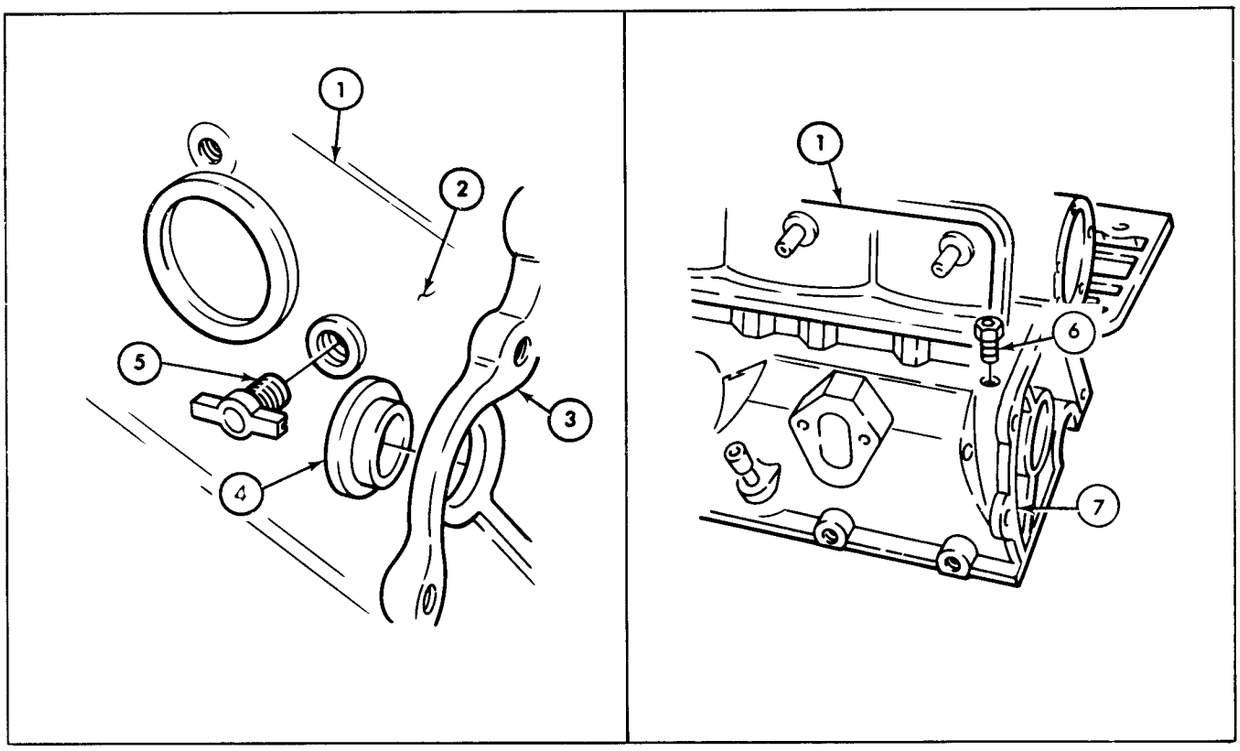

TA 157035

3-27. Cylinder Block Repair (Cont'd)

STEP NO.	LOCATION	ITEM	ACTION	REMARKS
6.	Right side (9) of cylinder block (1)	Oil level indicator tube (8)	Remove by driving out from underside of block (1).	Discard tube (8).

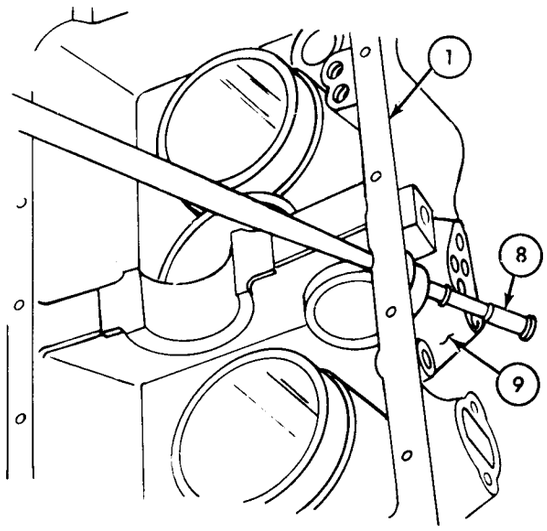

7.	Valve tappet chamber (10)	Distributor gear oil tube (11)	Remove by twisting and sliding up from block (1).	Discard tube (11).

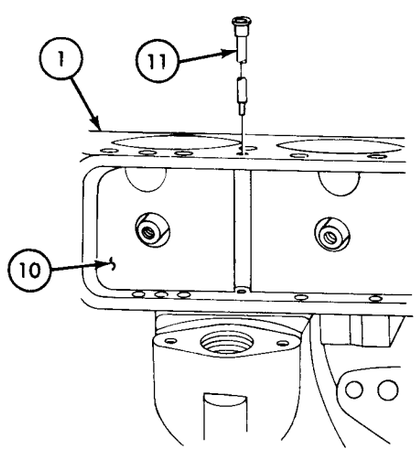

TA 157036

3-27. Cylinder Block Repair (Cont'd)

STEP NO.	LOCATION	ITEM	ACTION	REMARKS
8.	Front (1) of cylinder block (3)	Two dowel pins (2)	Remove.	Discard dowel pins (2).
9.	Rear (6) of cylinder block (3)	Two dowel pins (7)	Drive out to remove.	Discard dowel pins (7).
10.	Top (4) of cylinder block (3)	Two dowel pins (5)	Twist out to remove.	Discard dowel pins (5).

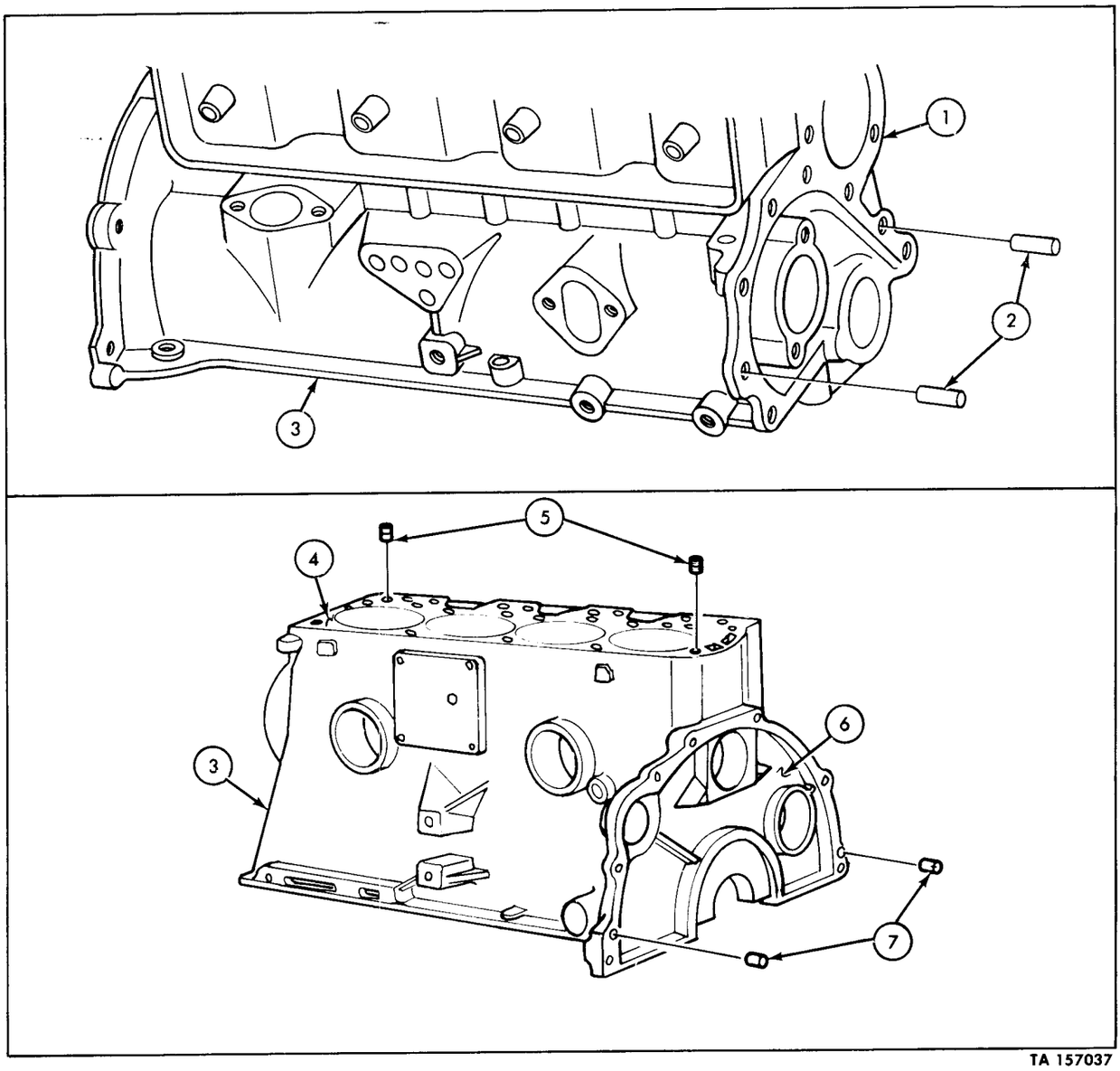

TA 157037

3-27. Cylinder Block Repair (Cont'd)

STEP NO.	LOCATION	ITEM	ACTION	REMARKS
		NOTE Camshaft bearing expansion plug must be removed if end bearing (8) is to be removed.		
11.	Cylinder block (3)	Three camshaft bearings (8), (9), and (11)	Drive out to remove from three camshaft bearing bores (10).	Use camshaft bearing remover and replacer tool (12). Discard bearings (8), (9), and (11).

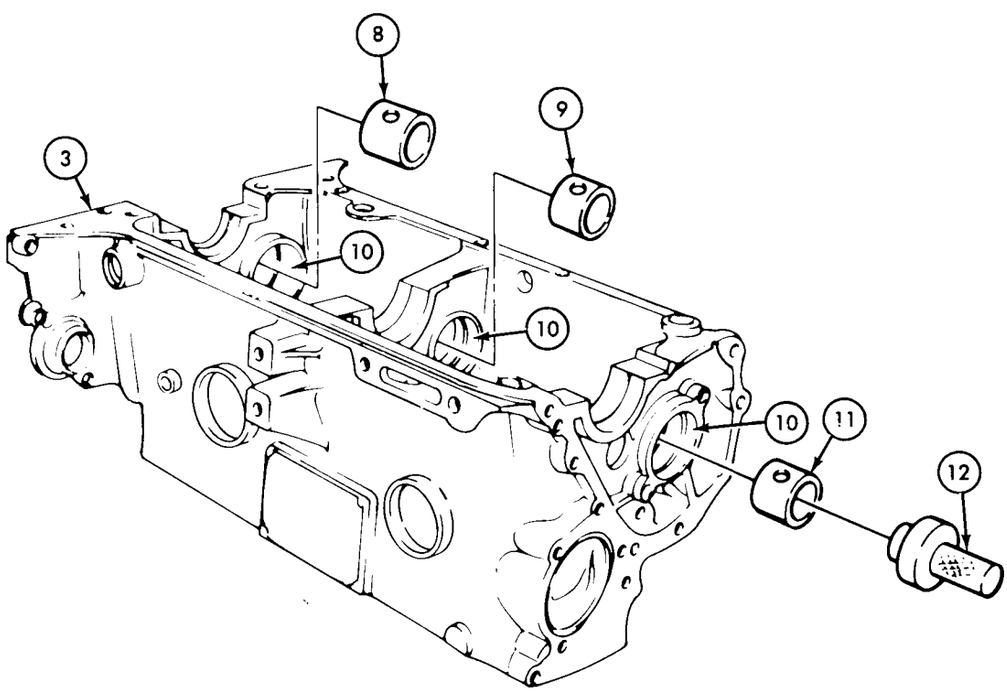

TA 157038

3-27. Cylinder Block Repair (Cont'd)

STEP NO.	LOCATION	ITEM	ACTION	REMARKS
		b. CLEANING AND INSPECTION		
12.		Cylinder block (6)	*a.* Clean in accordance with instructions in paragraph 3-19.	
			NOTE Refer to paragraph 3-20 for general inspection instructions.	
			b. Check all machined gasket surfaces for burrs, nicks, scratches, and and scoring.	Remove minor imperfections with an oil stone. Replace engine assembly if deeply burred, nicked, scratched, or scored.
			c. Check for block surface uneveness by sliding a feeler gage (5) between surface gage edge (2) and cylinder block (6) diagonally, (3) to (1), and across center (4).	Replace if warped beyond tolerance (see table 3-5 for specifications).
			d. Repeat uneveness check across opposite diagonal.	
			e. Check for stripped and missing threads.	Repair stripped or missing threads using tap. Replace engine assembly if threads cannot be repaired.
			f. Check four cylinder bores for deep scratches, scoring, roughness, and wear.	Replace engine assembly if bores are deeply scratched, scored, rough, or worn (see table 3-5 for specifications).

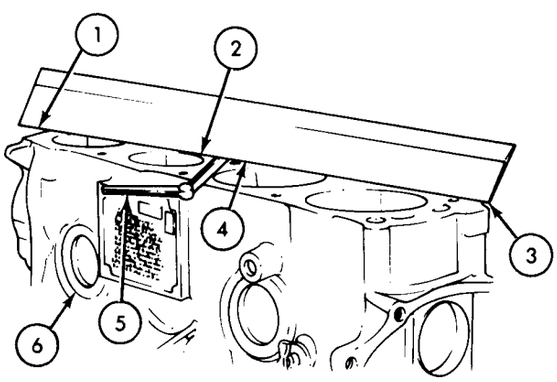

TA 157039

3-27. Cylinder Block Repair (Cont'd)

STEP NO.	LOCATION	ITEM	ACTION	REMARKS
13.		Four cylinder bores (7)	Check for out-of-round and taper as follows:	Use cylinder taper gage.
			a. Place gage at right angles (8) and parallel (12) to centerline (13) of cylinder block (6).	
			b. Measure diameter of each bore (7) at top (9), middle (10), and bottom (11).	If bore measurements are within specifications (see table 3-5), remove high polish on cylinder wall in task *c* of this paragraph. Replace engine assembly if bore (7) measurements are not within specifications (see table 3-5).

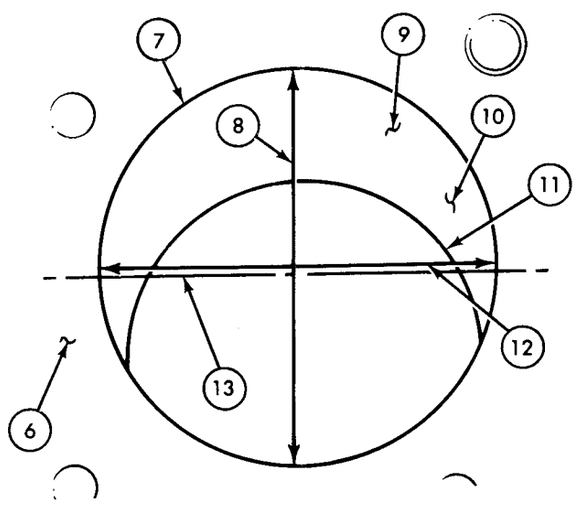

TA 157040

3-27. Cylinder Block Repair (Cont'd)

STEP NO.	LOCATION	ITEM	ACTION	REMARKS
14.		Three camshaft bearing bores (1)	*a.* Check for gouges, deep scratches, and scores.	Replace engine assembly if camshaft bearing bore (1) is gouged, deeply scratched, or scored.
			b. Measure inside diameter.	Use inside micrometer. Replace engine assembly if camshaft bearing bore (1) is not within specifications (see table 3-5).
15.		Expansion plug bores (2)	*a.* Check for deep scratches, gouges, and distortion.	Replace engine assembly if expansion plug bores (2) are deeply scratched, gouged, or distorted.
			b. Measure inside diameter.	Use inside micrometer. Replace engine assembly if expansion plug bores (2) are not within specifications (see table 3-5).
16.		Main bearing bores (3)	Inspect.	Refer to paragraph 3-30.

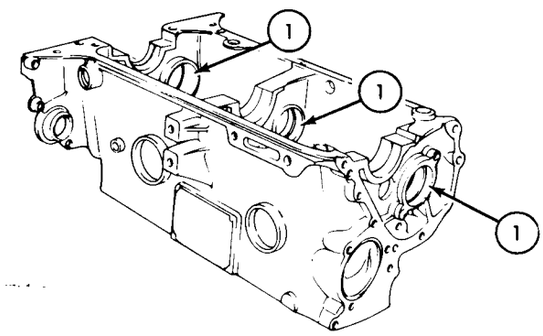

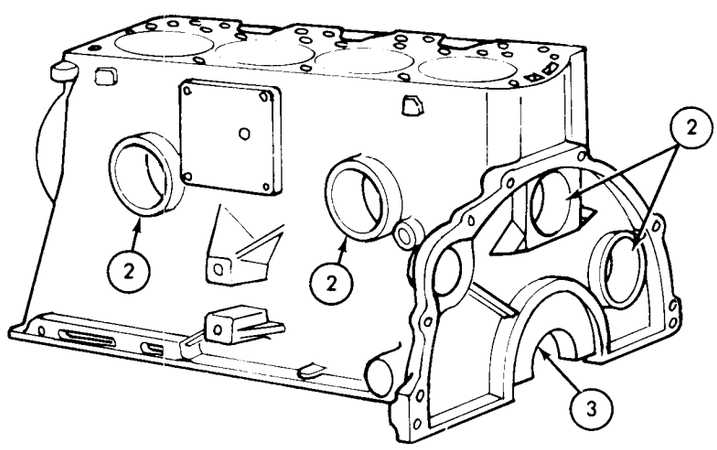

TA 157041

3-27. Cylinder Block Repair (Cont'd)

STEP NO.	LOCATION	ITEM	ACTION	REMARKS
17.		Dowel holes	Check for wear.	Replace engine assembly if dowel holes are worn.
18.		Draincock (4)	*a.* Check for stripped and missing threads.	Replace if threads are stripped or missing.
			b. Check for proper shutoff operation.	Replace if not operating properly.
19.		Crankcase ventilation fitting (5)	Check for distortion and stripped and missing threads.	Replace if distorted or threads are stripped or missing.

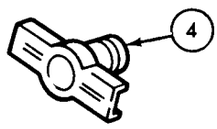

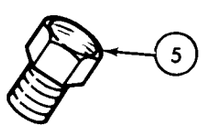

TA 157042

3-27. Cylinder Block Repair (Cont'd)

STEP NO.	LOCATION	ITEM	ACTION	REMARKS
c. REPAIR				
20.		Four cylinder bores (2)	Remove high polish or glaze as follows:	
			a. Place oiled rag at bottom of bore (2).	Rag collects grit from honing operation.
			CAUTION	
			Do not hone bores more than enough to rough up polish. Do not remove any additional amount of material other than polish or glaze.	
			b. Pass hone through bore (2) a few times.	Use finest grade of honing stone.
			c. Remove oiled rag.	
			d. Thoroughly clean cylinder bore (2) and cylinder block (1).	Refer to paragraph 3-19.
			e. Measure diameter of each bore (2).	Refer to step 13 of this paragraph.

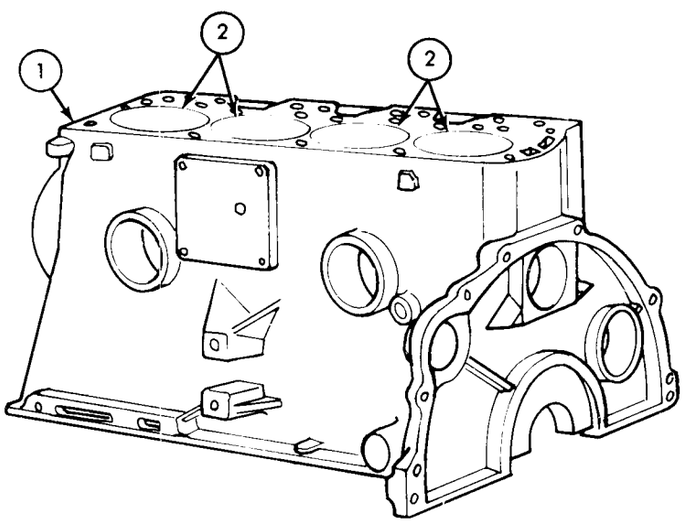

TA 157043

3-27. Cylinder Block Repair (Cont'd)

STEP NO.	LOCATION	ITEM	ACTION	REMARKS
d. REASSEMBLY				
		NOTE		
		Oil camshaft bearings with OE/HDO oil before installation.		
21.		Three new camshaft bearings (4)	*a.* Aline oil hole (5) in camshaft bearing (4) to oil hole (7) in camshaft bearing bore (3).	Oil hole (7) is a passageway from front main bearing bore (8) to camshaft bearing bore (3).
			b. Drive into camshaft bearing bore (3).	Use camshaft bearing remover and replacer tool (6).

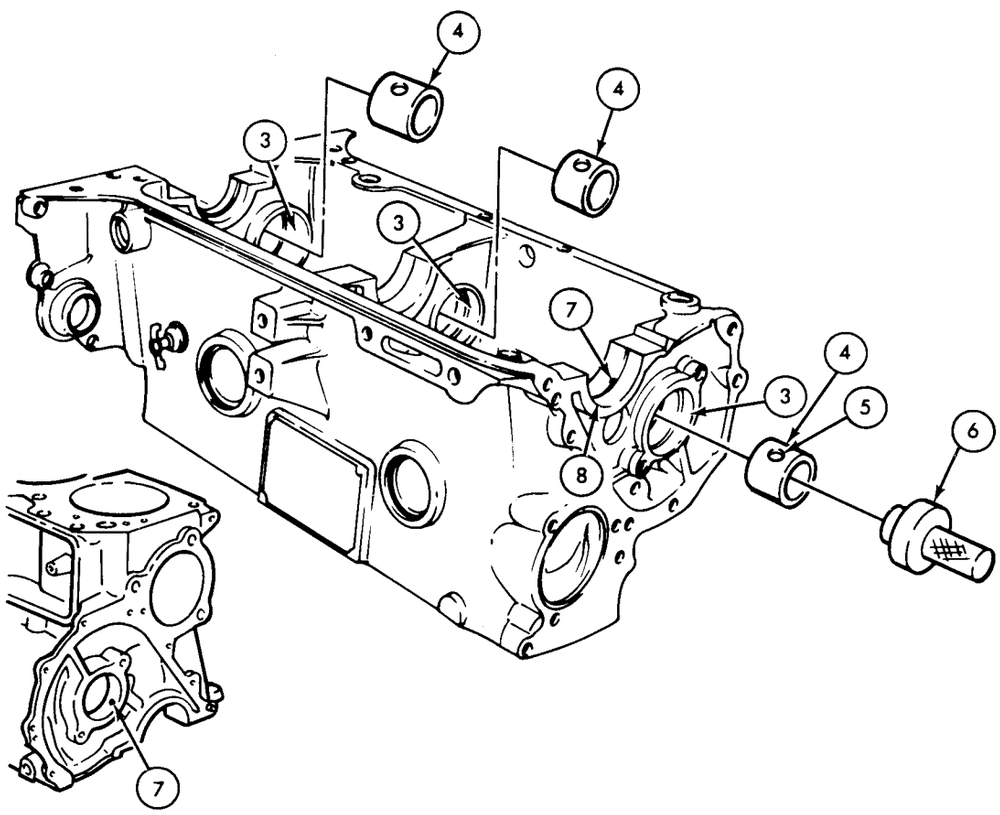

TA 157044

3-27. Cylinder Block Repair (Cont'd)

STEP NO.	LOCATION	ITEM	ACTION	REMARKS
22.		Three new coolant expansion plugs (1)	*a.* Lightly coat mating surface with sealer.	
			b. Place on expansion plug replacer tool (4).	Cup side of plug (1) faces out.
			c. Install in bores (2) until flush with cylinder block (3).	Flange of tool (4) will stop at surface of block (3).
23.		New camshaft bearing expansion plug (5)	Install in bore (6) of cylinder block (3).	Repeat step 22 to install.
24.		New clutch release rod seal retainer (10)	*a.* Lightly coat pilot surface (8) with sealer.	
			b. Install in bore (7) until bead (9) is flush with surface of cylinder block (3).	Use wood block and mallet.

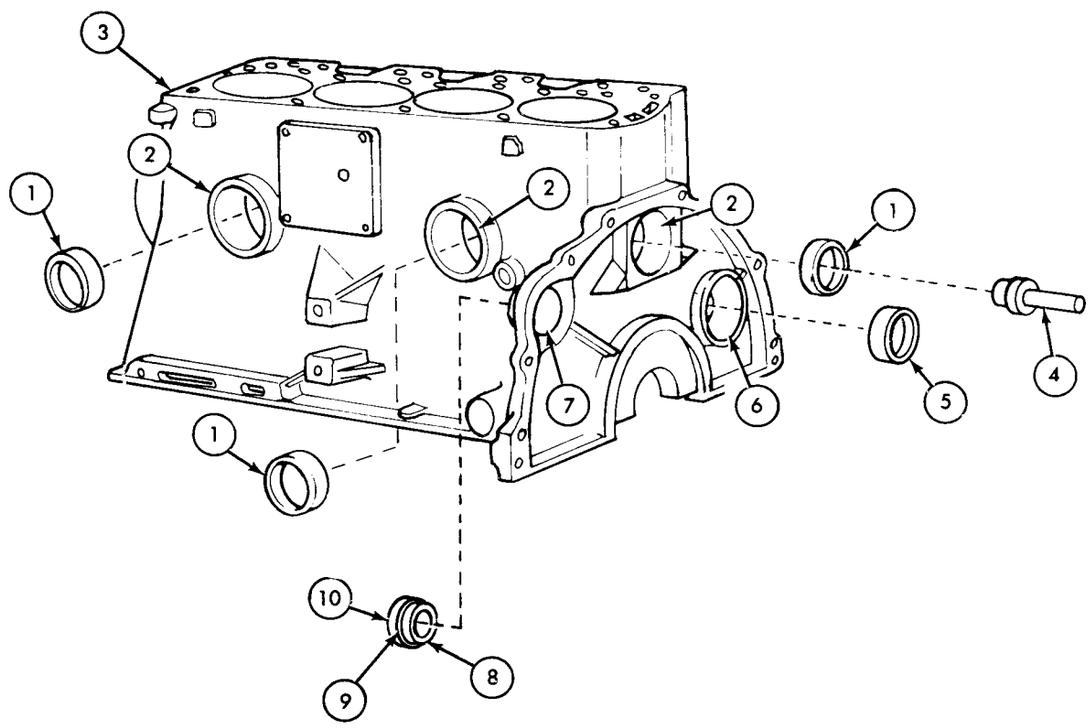

TA 157045

3-27. Cylinder Block Repair (Cont'd)

STEP NO.	LOCATION	ITEM	ACTION	REMARKS
		NOTE		
		Cylinder head to block dowel pins (12) may be threaded. If threaded, turn in to limit of threads in block (3).		
25.		Two new cylinder head to block dowel pins (12)	Install into bores (11) of cylinder block (3) until seated.	
26.		Two new cylinder block to flywheel housing dowel pins (14)	Install into bores (13) of block (3) to a height of 0.28 in. (7.14 mm).	
27.		Two new cylinder block to timing gear cover dowel pins (16)	Install into bores (15) of block (3) to a height of 0.25 in. (6.34 mm).	

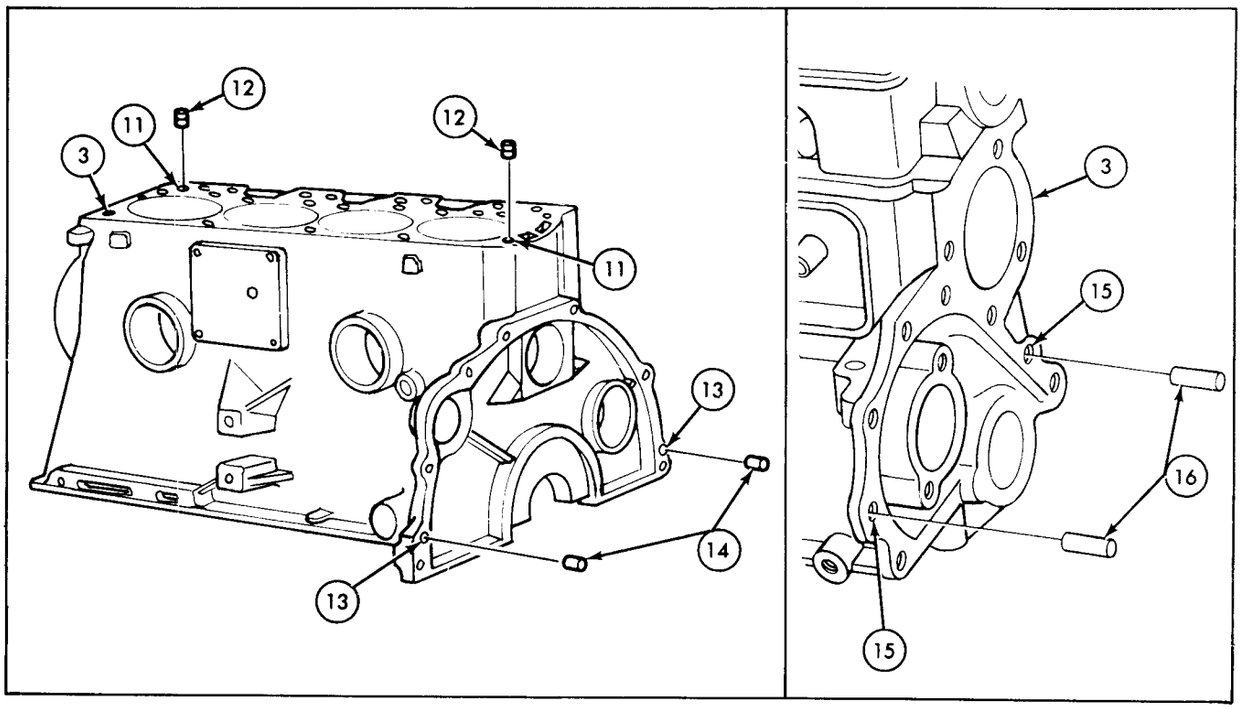

TA 157046

3-27. Cylinder Block Repair (Cont'd)

STEP NO.	LOCATION	ITEM	ACTION	REMARKS
28.		New distributor gear oil tube (2)	*a.* Insert through hole (3) in cylinder block (1) and hole (4) in base of valve tappet chamber (5).	Insert small end of tube (2) first.
			b. Drive in place until top is flush with top of block (1).	
29.		New oil level indicator tube (6)	*a.* Lightly coat pilot surface (8) with sealer.	
			b. Install in bore (10) until bead (7) is flush with boss (9) of block (1).	

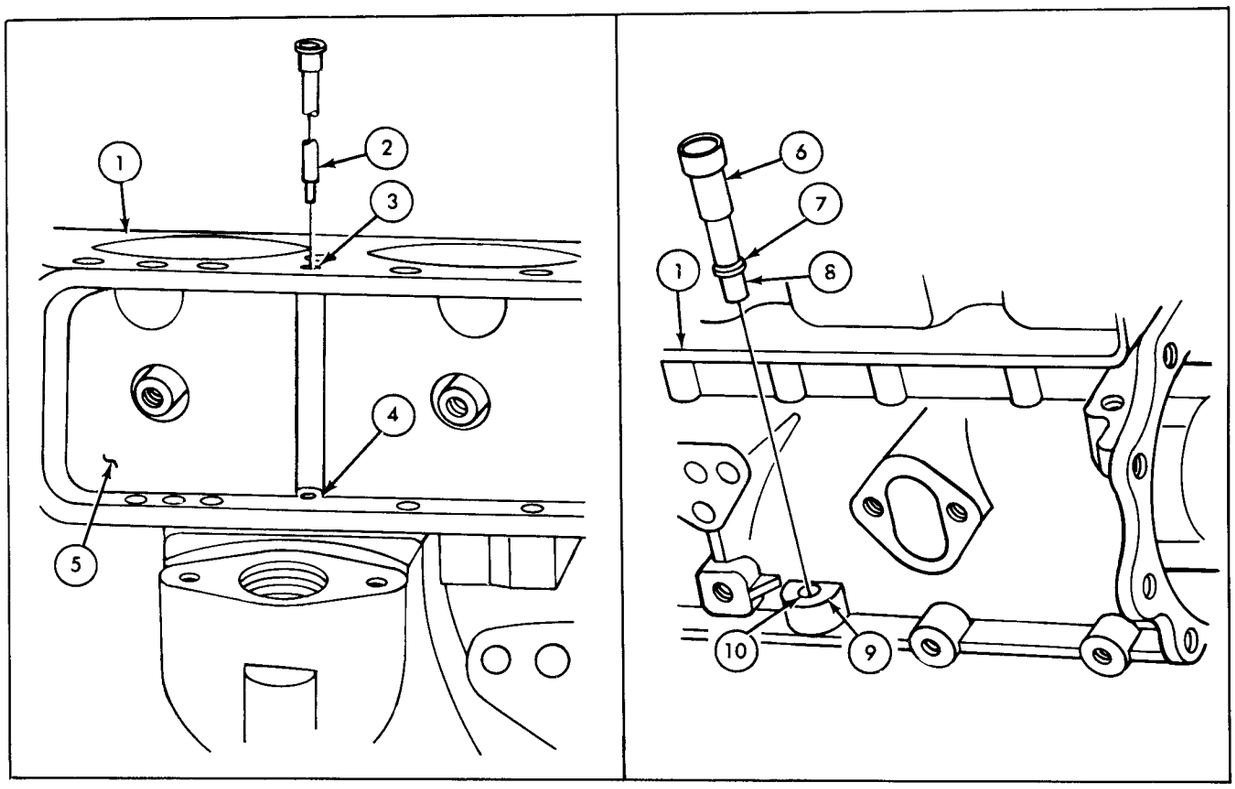

TA 157047

3-27. Cylinder Block Repair (Cont'd)

STEP NO.	LOCATION	ITEM	ACTION	REMARKS
30.		Draincock (11)	*a.* Lightly coat threads (13) with sealer.	Do not coat first two threads (13) with sealer.
			b. Install in port (12) in left side of cylinder block (1) and tighten.	
31.		Crankcase ventilation connector fitting (14)	*a.* Lightly coat threads (15) with sealer.	Do not coat first two threads (15) with sealer.
			b. Install in port (16) in front of cylinder block (1) and tighten.	

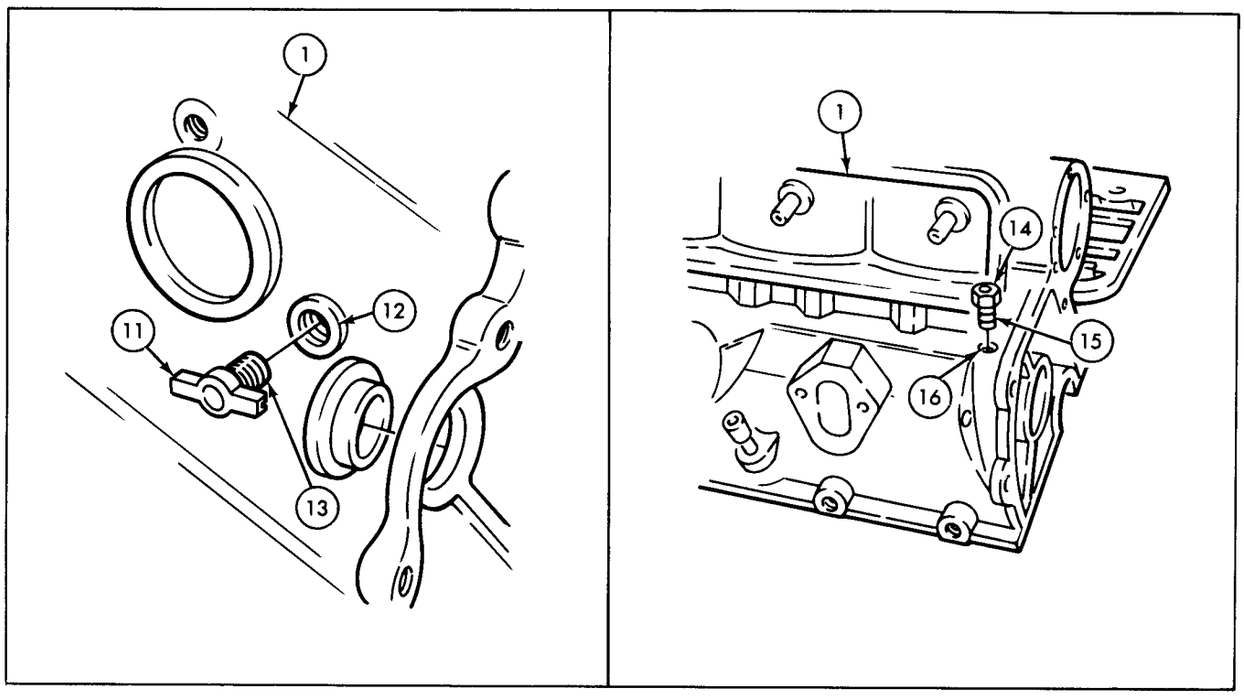

END OF TASK!

FOLLOW-ON TASK: Reassemble engine (para 3-16).

TA 157048

3-28. Connecting Rod and Piston Repair

This task covers:

a. Disassembly
b. Cleaning and Inspection
c. Fitting Connecting Rod Bearings
d. Reassembly

INITIAL SETUP:

Applicable Models
All

Equipment Condition Reference
Para 3-15

Condition Description
Piston and connecting rod assembly removed.

Test Equipment
None

Special Tools
Arbor press
Piston ring expander
Piston ring groove cleaning tool
Ribbon feeler gage set
Telescoping gage
Inside micrometer

Special Environmental Conditions
Clean, well-ventilated work area.

Materials/Parts
OE/HDO oil
Plasti-gage set
Eight connecting rod locknuts
Piston ring set
Eight piston pin retainers
Four connecting rod bushings

Personnel Required
One mechanic

General Safety Instructions
None

Manual References
TM 9-2320-218-34P
LO 9-2320-218-12

STEP NO.	LOCATION	ITEM	ACTION	REMARKS
a. DISASSEMBLY				
		CAUTION Do not scratch piston during piston ring removal.		
		NOTE All four piston and connecting rods are disassembled the same way; only one is covered in steps 1 through 7.		
1.		Piston and connecting rod assembly (4)	Secure in bench vise.	Clamp vise on rod with piston head up.

3-28. Connecting Rod and Piston Repair (Cont'd)

STEP NO.	LOCATION	ITEM	ACTION	REMARKS
2.	Piston and connecting rod assembly (4)	No. 1 compression ring (1), no. 2 compression ring (2), and oil control ring assembly (3)	Remove.	Use piston ring expander tool. Discard rings (1), (2), and (3).

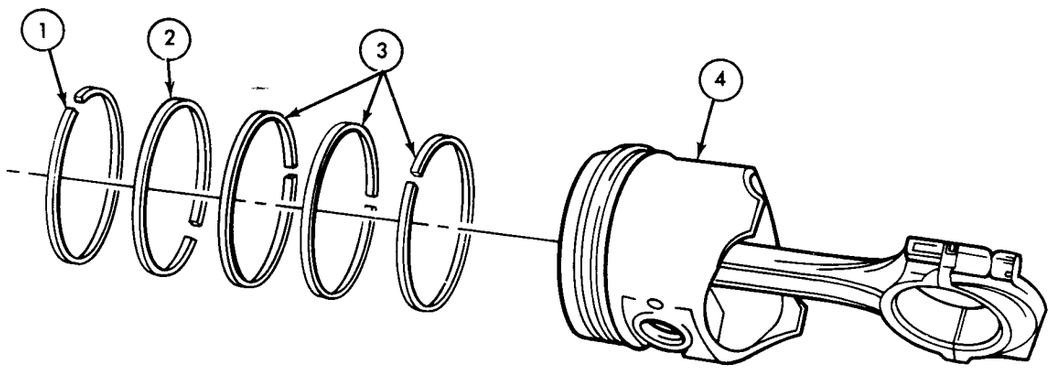

3.		Two piston pin retainers (5)	Remove from piston and connecting rod assembly (4).	Use snapring pliers. Discard retainers (5).

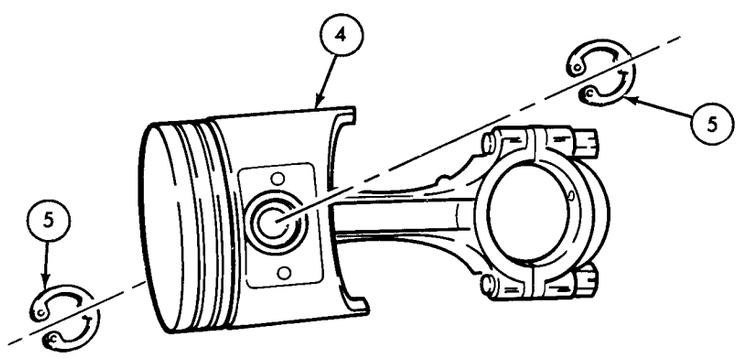

TA 157049

3-28. Connecting Rod and Piston Repair (Cont'd)

STEP NO.	LOCATION	ITEM	ACTION	REMARKS
4.		Piston pin (1)	Remove from piston (2) and rod (3).	Piston pin (1) is thumb-push fit in piston (2). If stuck, press out using arbor press.
5.	Connecting rod (3) to rod cap (6)	Two rod locknuts (7)	Remove and detach rod cap (6).	It may be necessary to tap cap (6) with light mallet. Discard locknuts (7).
6.		Two rod bolts (5)	Remove.	Drive out with light mallet. Bolts (5) are snug fit in rod (3).
7.	Connecting rod (3)	Connecting rod bushing (8)	Press out of rod bore (9).	Use arbor press. Discard bushing (8).

b. CLEANING AND INSPECTION

NOTE

All pistons and connecting rods are cleaned and inspected the same way; only one of each is covered in steps 8 through 15.

8.		Piston (2), piston pin (1), connecting rod (3), rod cap (6), and bolts (5)	Clean in accordance with instructions in paragraph 3-19.

CAUTION

Do not remove piston material during ring groove carbon removal.

9.		Piston (2)	*a.* Remove carbon from three ring grooves (11). — Use piston ring groove cleaner (10). *b.* Clean oil holes (12). — Refer to paragraph 3-19.

3-28. Connecting Rod and Piston Repair (Cont'd)

STEP NO.	LOCATION	ITEM	ACTION	REMARKS
10.		Connecting rod (3)	Clean oil spit hole (4).	Refer to paragraph 3-19.

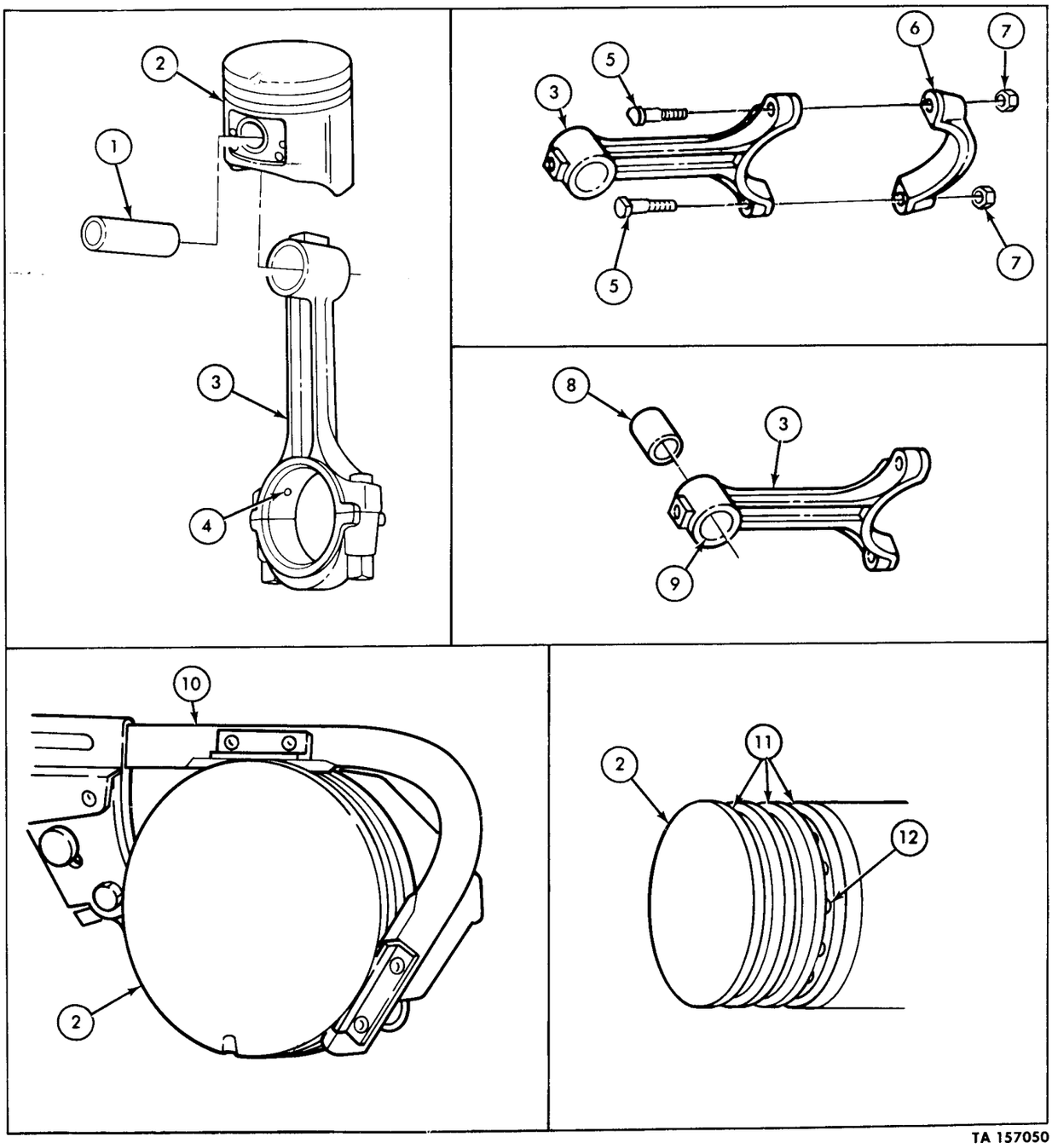

TA 157050

3-28. Connecting Rod and Piston Repair (Cont'd)

STEP NO.	LOCATION	ITEM	ACTION	REMARKS
		NOTE		
		Refer to paragraph 3-20 for general inspection instructions.		
11.		Piston (1)	*a.* Inspect for cracks, breaks, scuffing, scoring, and wear.	Replace if cracked, broken, scuffed, scored, or worn (see table 3-6 for specifications).
			b. Inspect ring lands (3) for breaks, waviness, cracks, and damage.	Replace if ring lands (3) are broken, wavy, cracked, or damaged.
			c. Inspect for shiny surface on thrust surface of skirt (2).	Replace piston (1) if thrust surface is shiny.
12.		Piston to cylinder clearance (4)	Check as follows:	
			a. Insert feeler gage ribbon (6) and piston (1) in cylinder bore (7) upside down.	Use 1/2 in. (12.7 mm) wide feeler gage ribbon (6) and tension scale (5).
			b. Place feeler gage (6) between piston thrust surface (2) and cylinder bore (7).	If clearance is not within specifications, replace piston (1) or engine assembly (see table 3-6).

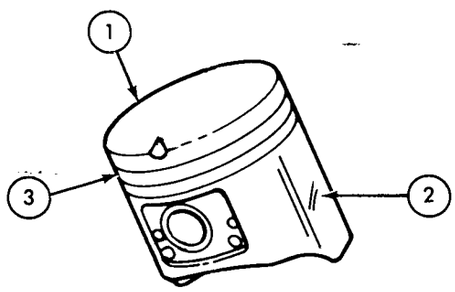

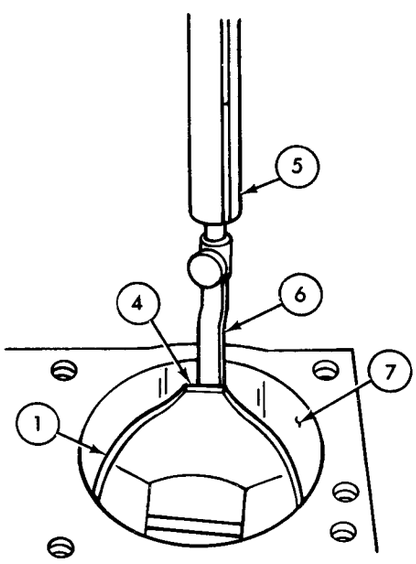

TA 157051

3-28. Connecting Rod and Piston Repair (Cont'd)

STEP NO.	LOCATION	ITEM	ACTION	REMARKS
13.		Piston pin (8)	Check for cracks, breaks, etching, and wear.	Replace if cracked, broken, etched, or worn (see table 3-6 for specifications).
14.		Connecting rod (10)	*a.* Inspect for breaks, cracks, distortion, and twists.	Replace if broken, cracked, distorted, or twisted (see table 3-6 for specifications).
			b. Check pin bushing bore (9) for out-of-round, scoring, cracks, breaks, and wear.	Replace rod (10) if bore (9) is out-of-round, scored, cracked, broken, or worn (see table 3-6 for specifications).
15.		Connecting rod cap (11)	Inspect for cracks, breaks, warpage, and bends.	Replace rod (10) and cap (11) if cracked, broken, warped, or bent.

NOTE

If connecting rod assembly is replaced, identify new rod assembly to corresponding cylinder bore.

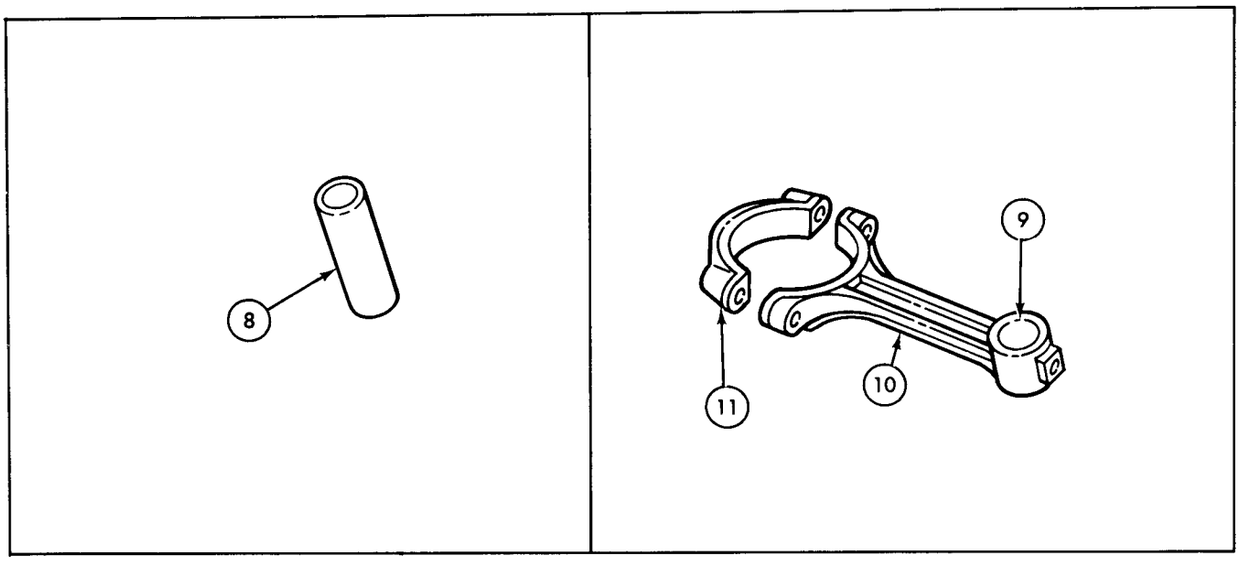

TA 157052

3-28. Connecting Rod and Piston Repair (Cont'd)

STEP NO.	LOCATION	ITEM	ACTION	REMARKS
		c. FITTING CONNECTING ROD BEARINGS		
		NOTE		
		All connecting rod bearings are fitted the same way. Only one connecting rod (1) is covered in steps 16 through 20.		
16.	Connecting rod (1)	Connecting rod bore (5)	Measure inside diameter as follows:	
			a. Position rod cap (3) to rod (1) and secure with bolts (2) and new locknuts (4).	Tighten locknuts (4) evenly 40-55 lb-ft (55-75 N•m).
			b. Measure bore (5) at points A-A, B-B, and C-C.	Use inside micrometer and telescoping gage. Replace rod (1) and cap (3) if dimensions do not meet specifications (see table 3-6).
			c. Remove locknuts (4) and detach cap (3) from rod (1).	

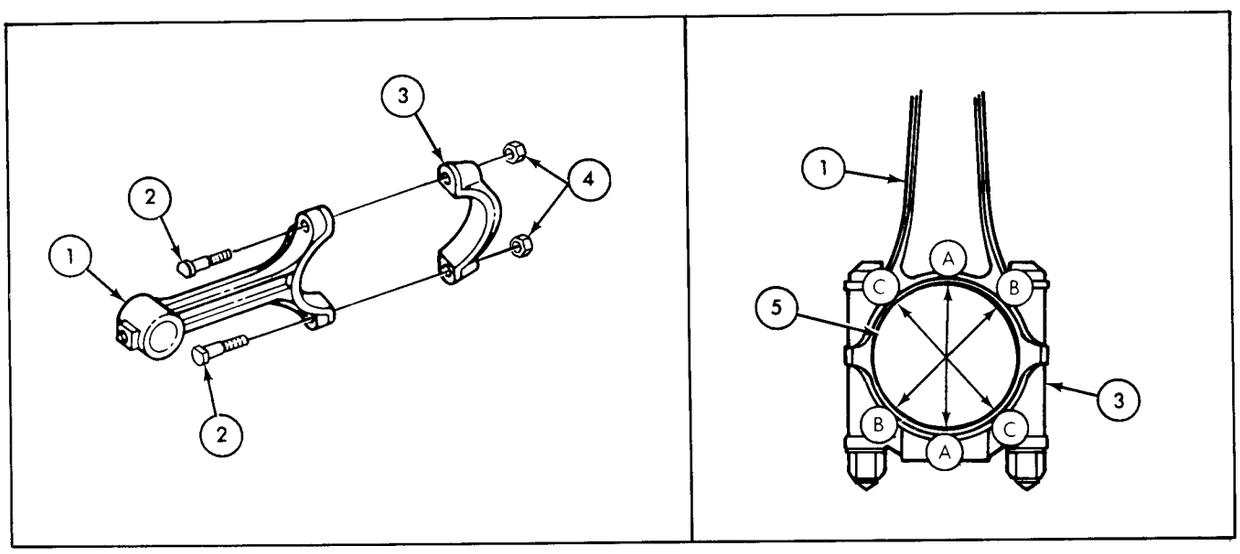

TA 157053

3-28. Connecting Rod and Piston Repair (Cont'd)

STEP NO.	LOCATION	ITEM	ACTION	REMARKS
		CAUTION		
		Do not rotate crankshaft when using plasti-gage.		
		NOTE		
		Check clearance of one connecting rod (1) at a time on matching crankshaft journal (7).		
17.		New bearing halves (6) and (8)	Install in connecting rod (1) and cap (3).	Make sure tangs (9) fully enter slots in rod (1) and cap (3).
18.		Connecting rod (1) and upper bearing half (8)	Place on crankshaft journal (7).	Place on same journal (7) from which cylinder rod (1) was removed.
19.		Plasti-gage (11)	Place on crankshaft journal (7) directly opposite rod (1).	
20.		Connecting rod cap (3) and lower bearing half (6)	*a.* Place on rod (1) and secure with two lock-nuts (4).	Tighten locknuts (4) 40-55 lb-ft (55-75 N•m).
			b. Remove two lock-nuts (4) and detach.	
			c. Compare plasti-gage (11) spread to gage (10).	Use .001-.003 in. (.0254-.0726 mm) plasti-gage (10) (see table 3-6 for clearance specifications).
			d. Remove plasti-gage (11).	Make sure all plasti-gage (11) is cleaned off of crankshaft journal (7) and bearing half (6).

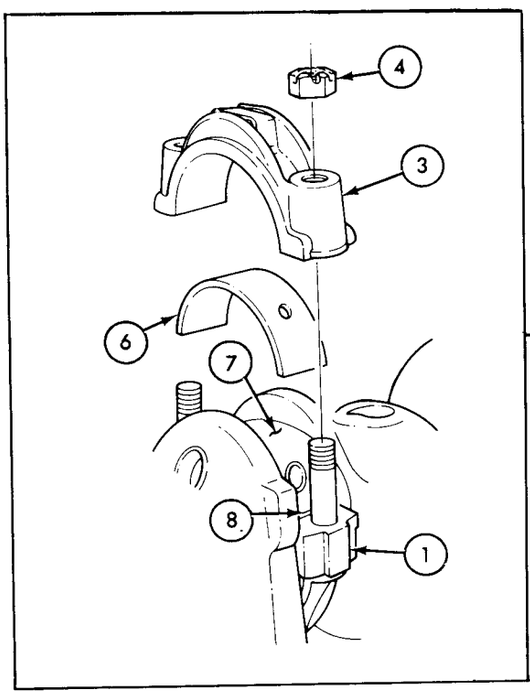

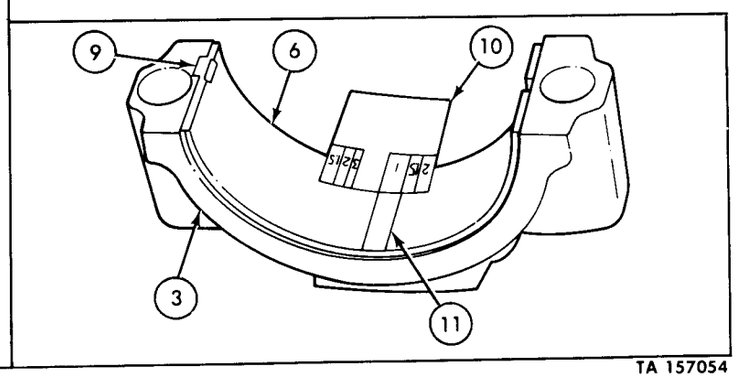

TA 157054

3-28. Connecting Rod and Piston Repair (Cont'd)

STEP NO.	LOCATION	ITEM	ACTION	REMARKS
	d. REASSEMBLY			
		NOTE • Lubricate all components with OE/HDO oil during reassembly. • All connecting rod and piston assemblies are reassembled the same way; only one is covered in steps 21-25.		
21.		New connecting rod bushing (1)	Install in bore (3) of of rod (2).	
		NOTE Check piston pin fit in bushing (see table 3-6 for specifications).		
22.		Two rod bolts (4)	Place in connecting rod (2).	Flat surface of bolt (4) must face toward rod (2).
23.		Cap (5)	Install on rod (2) and secure with two locknuts (6).	Match number on rod (2) to number on cap (5) and make sure bearing tangs are assembled on same side. Finger tighten locknuts (6).

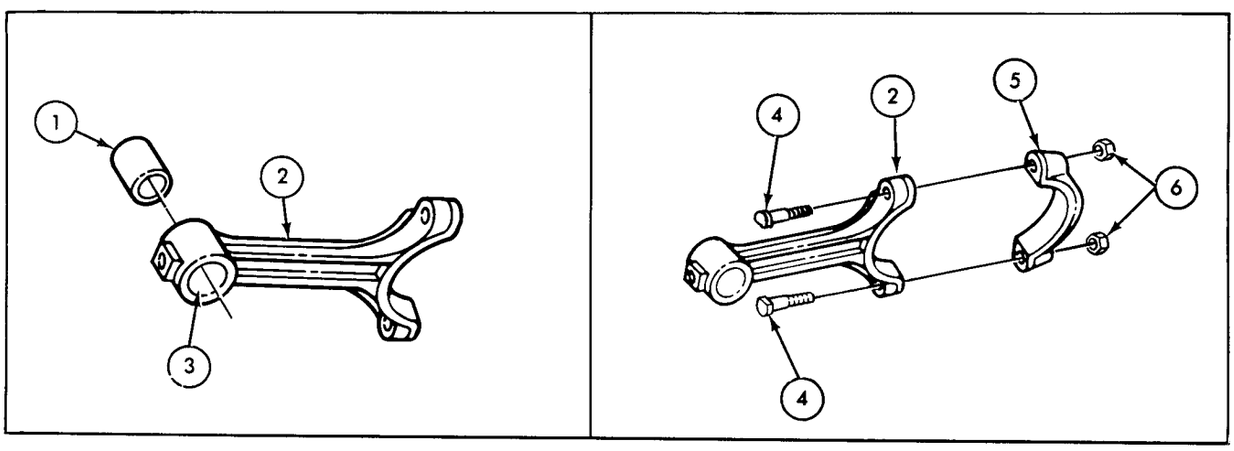

TA 157055

3-28. Connecting Rod and Piston Repair (Cont'd)

STEP NO.	LOCATION	ITEM	ACTION	REMARKS
24.		Piston pin (7)	*a.* Aline pin bore (8) in piston (10) to pin bore (3) in connecting rod (2).	Notch (9) on top of piston (10) must face front of engine, and oil spit hole (11) must be on right or camshaft side of engine.
			b. Push piston pin (7) through bores (8) and (3).	Pin (7) is a thumb-push fit.
25.		Two new piston pin retainers (12)	Install one at each end of piston pin (7) in groove (13) of piston (10).	Use snapring pliers. Make sure retainers (12) are seated in grooves (13).

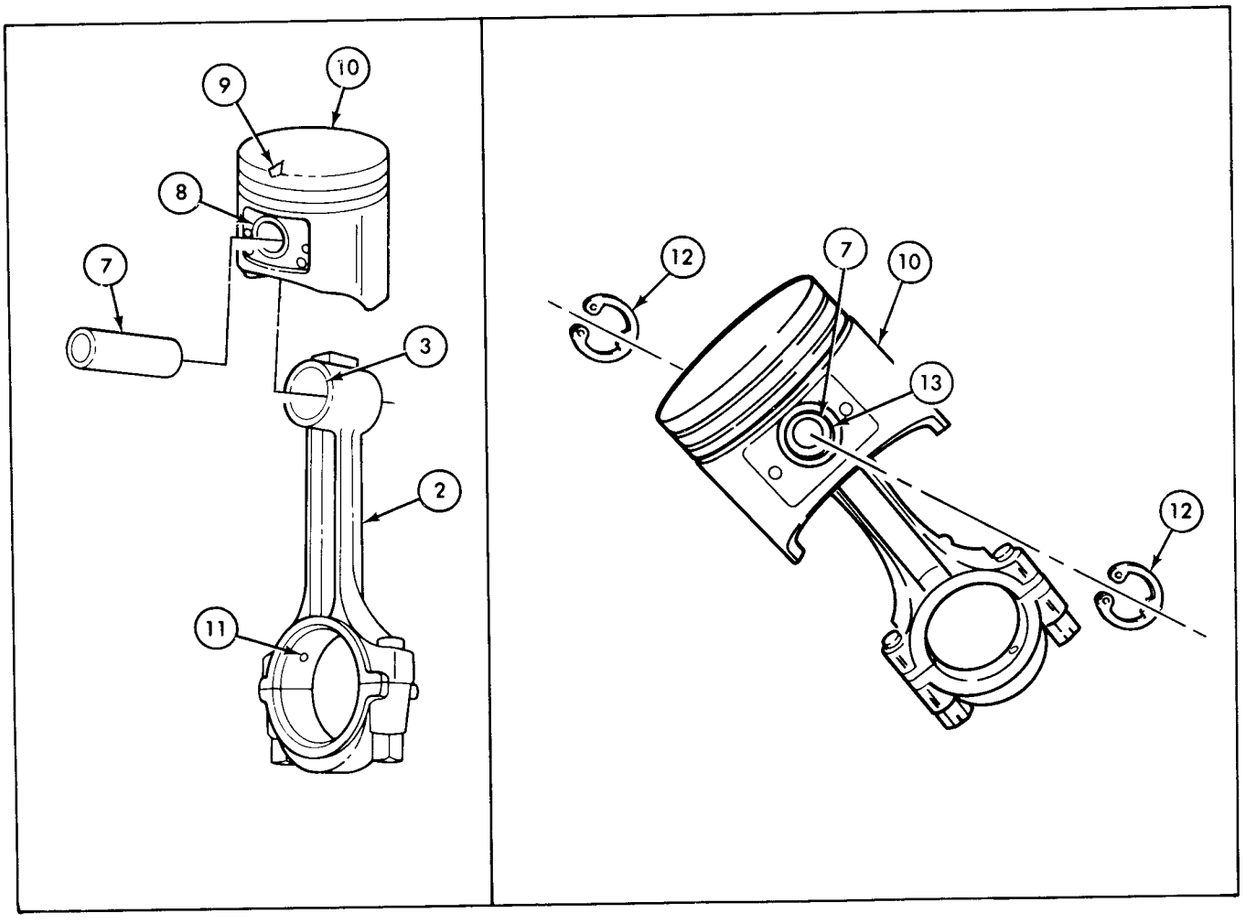

TA 157056

3-28. Connecting Rod and Piston Repair (Cont'd)

STEP NO.	LOCATION	ITEM	ACTION	REMARKS
		NOTE • Ensure cylinder bores are checked for out-of-round (para 3-27) before installing piston rings. • Install piston top compression rings (2) in same cylinder bore (3) as gapped when reassembling engine (para 3-16).		
26.		Four top compression rings (2)	*a.* Place one in each cylinder bore (3) of block (1).	
			b. Push into bore (3) area where the minimum ring-gap is met.	
			c. Use head of piston (6) to center ring (2) in cylinder bore (3).	
			d. Measure gap (4) between ends of piston ring (2).	Use feeler gage (5). See table 3-6 for ring gap specifications.
			e. Repeat steps *a* through *d* for rings (7), (9), and (10).	Do not gap oil ring spacer (8).

3-28. Connecting Rod and Piston Repair (Cont'd)

STEP NO.	LOCATION	ITEM	ACTION	REMARKS

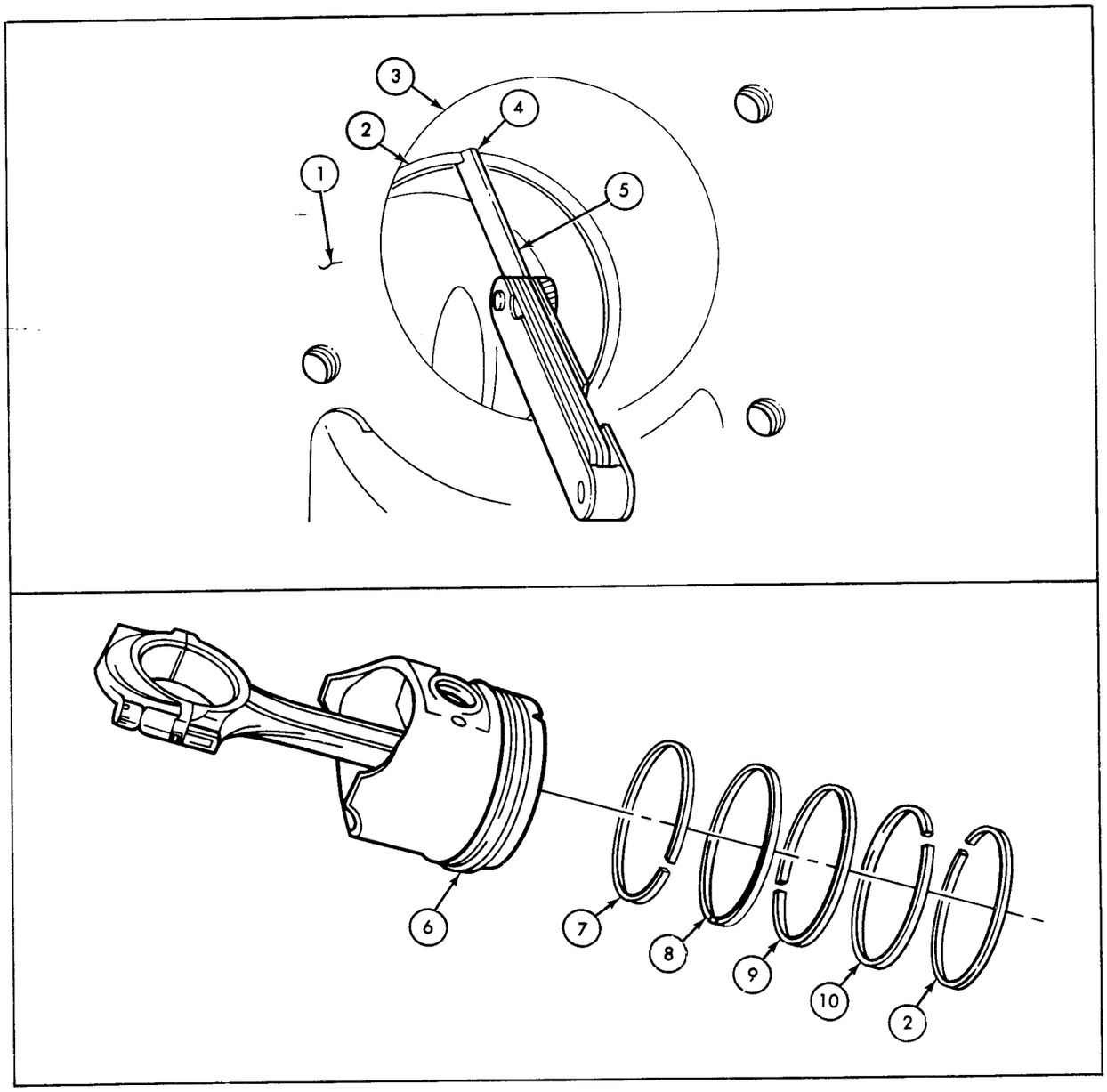

TA 157057

3-28. Connecting Rod and Piston Repair (Cont'd)

STEP NO.	LOCATION	ITEM	ACTION	REMARKS
		CAUTION Do not scratch piston (1) during ring installation.		
		NOTE Make sure inner portion of oil ring spacer (4) is positioned between both oil ring segments (3) and (5).		
27.		Oil ring spacer (4)	*a.* Install in bottom groove (15) of piston (1). *b.* Place gap (11) opposite notch (2) on top of piston (1).	
28.		Lower oil ring segment (3)	Install below oil ring spacer (4) in groove (15) of piston (1).	Gap (12) must be 1.5 in. (38.1 mm) to left of oil ring spacer gap (11). Use piston ring expander (16).
29.		Upper oil ring segment (5)	Install above oil ring spacer (4) in groove (15) of piston (1).	Gap (10) must be 1.5 in. (38.1 mm) to right of ring spacer gap (11). Use piston ring expander (16).
30.		Second compression ring (6)	Install with chamfer down in second groove (14) of piston (1).	Stagger gap (7) 150° to left of oil ring spacer gap (11). Use piston ring expander (16).
31.		First compression ring (9)	Install in top groove (13) of piston (1).	Stagger gap (8) 150° to right of oil ring spacer gap (11). Use piston ring expander (16).

3-28. Connecting Rod and Piston Repair (Cont'd)

STEP NO.	LOCATION	ITEM	ACTION	REMARKS

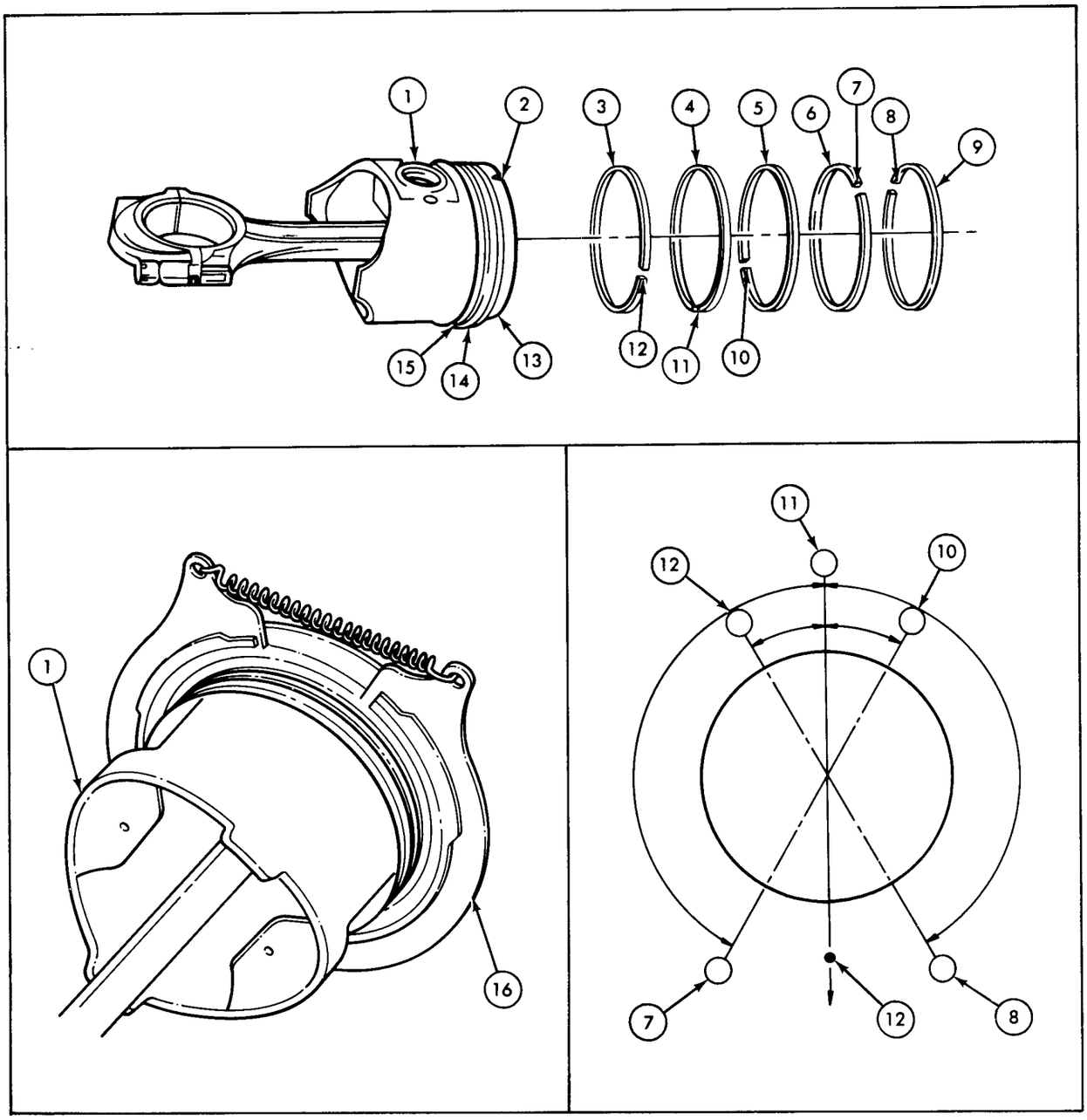

END OF TASK!

FOLLOW-ON TASK: Install connecting rod and piston assemblies (para 3-16).

TA 157058

3-29. Camshaft Repair

This task covers:

a. Disassembly
b. Cleaning and Inspection
c. Reassembly

INITIAL SETUP:

Applicable Models	Equipment Condition Reference	Condition Description
All	Para 3-15	Camshaft removed.

Test Equipment
Dial indicator assembly
Three V-blocks

Special Tools
None

Special Environmental Conditions
Clean, well-ventilated work area.

Materials/Parts
Sealer (NSN 8030-00-543-4384)
Woodruff key
Locking tab washer

Personnel Required
One mechanic

General Safety Instructions
None

Manual References
TM 9-2320-218-34P

STEP NO.	LOCATION	ITEM	ACTION	REMARKS
a. DISASSEMBLY				
		NOTE Camshaft gear bolt and tab washer are removed during engine disassembly (para 3-15).		
1.	Camshaft (1)	Woodruff key (2)	Remove.	Discard woodruff key (2).

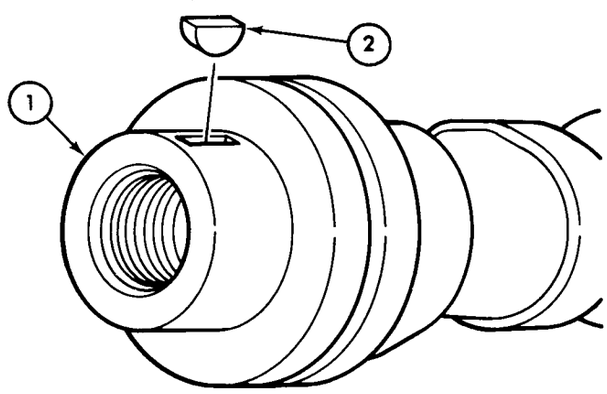

TA 157059

3-29. Camshaft Repair (Cont'd)

STEP NO.	LOCATION	ITEM	ACTION	REMARKS
b. CLEANING AND INSPECTION				
2.		Camshaft (1), thrust plate (3), and camshaft gear (4)	Clean in accordance with instructions in paragraph 3-19.	
		NOTE Refer to paragraph 3-20 for general inspection instructions.		
3.		Camshaft (1)	Check for cracks, breaks, rounded-off lobes, distortion, and wear.	Replace camshaft if cracked, broken, lobes rounded-off, distorted, or worn (see table 3-7 for specifications).
4.		Thrust plate (3)	Check for distortion, breaks, cracks, scoring, and wear.	Replace if distorted, broken, cracked, scored, or worn (see table 3-7 for specifications).
5.		Camshaft gear (4)	*a.* Inspect for stripped and broken gear teeth.	Replace if teeth are stripped or broken.
			b. Inspect for cracks, breaks, distortion, twists, and wear.	Replace if cracked, broken, distorted, twisted, or worn (see table 3-7 for specifications). If camshaft gear (4) is replaced, crankshaft gear must also be replaced.

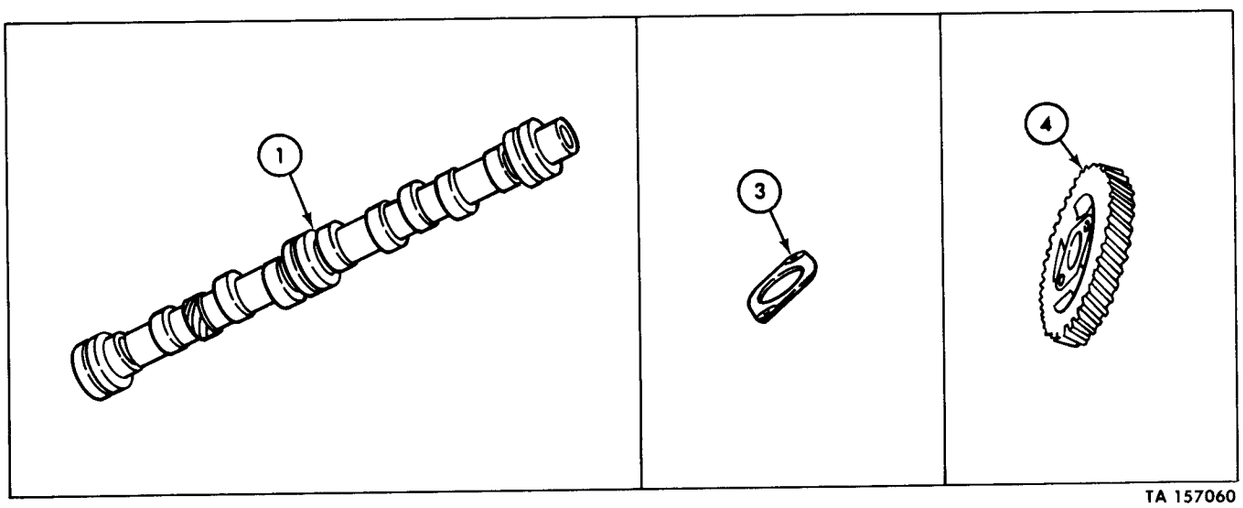

TA 157060

3-29. Camshaft Repair (Cont'd)

STEP NO.	LOCATION	ITEM	ACTION	REMARKS
6.		Camshaft (7)	Check camshaft lobe (8) lift as follows:	
			a. Place on three V-blocks (4).	Position V-blocks (4) under front journal (6), center journal (5), and rear journal (3).
			b. Mount dial indicator assembly (2).	
			c. Place dial indicator tip (9) on lowest point of cam lobe (8).	
			d. "Zero" dial indicator (1).	
			e. Rotate camshaft until dial indicator tip (9) is at highest point of lobe (8) and record reading.	Replace if lobe (8) lift is not within specifications (see table 3-7).
			f. Repeat steps *c* through *e* for the remaining seven lobes (8).	
			g. Remove camshaft (7) from three V-blocks (4).	

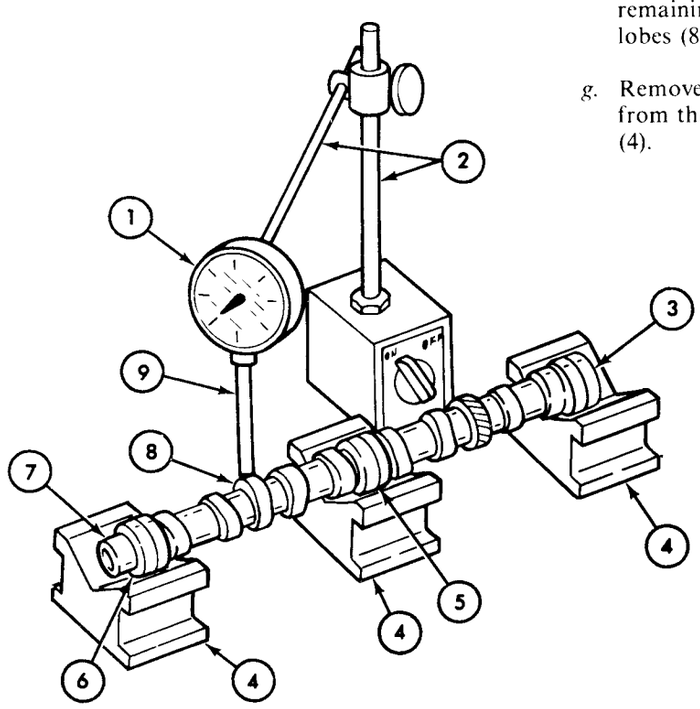

TA 157061

3-29. Camshaft Repair (Cont'd)

STEP NO.	LOCATION	ITEM	ACTION	REMARKS
7.		Camshaft (7)	Check alinement as follows:	
			a. Place on two V-blocks (4).	Position V-blocks (4) under front journal (6) and rear journal (3).
			b. Mount dial indicator assembly (2).	
			c. Place dial indicator tip (9) on center journal (5).	
			d. "Zero" dial indictor (1).	
			e. Rotate camshaft (7) 360° and record runout.	Replace camshaft (7) if runout is not within specications (see table 3-7).

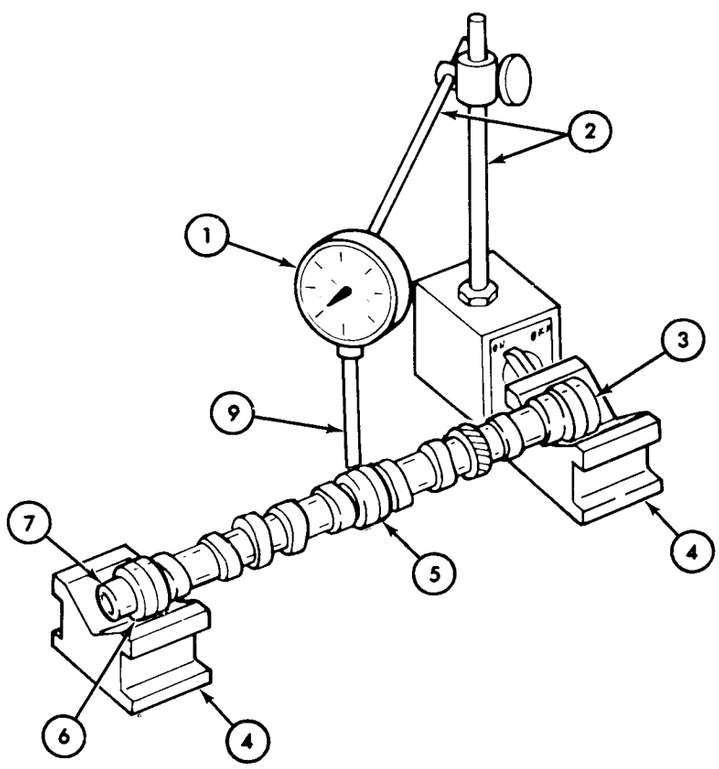

TA 157062

3-29. Camshaft Repair (Cont'd)

STEP NO.	LOCATION	ITEM	ACTION	REMARKS
c. REASSEMBLY				
8.		New woodruff key (7)	Install in slot (6) of camshaft (8).	
9.		Thrust plate (5)	Place on front of camshaft (8) with recessed edge facing out.	
10.		Retaining bolt (1)	Apply oil and sealer except on first two threads.	
		NOTE Be sure to install camshaft gear (4) on camshaft (8) with timing marks facing outward.		
11.		Camshaft gear (4)	*a.* Aline slot in gear (4) with woodruff key (7) and press onto camshaft (8).	Timing marks on gear (4) must face out.
			b. Secure with washer (3), new locking tab washer (2), and retaining bolt (1).	Finger tighten bolt (1).

3-29. Camshaft Repair (Cont'd)

STEP NO.	LOCATION	ITEM	ACTION	REMARKS

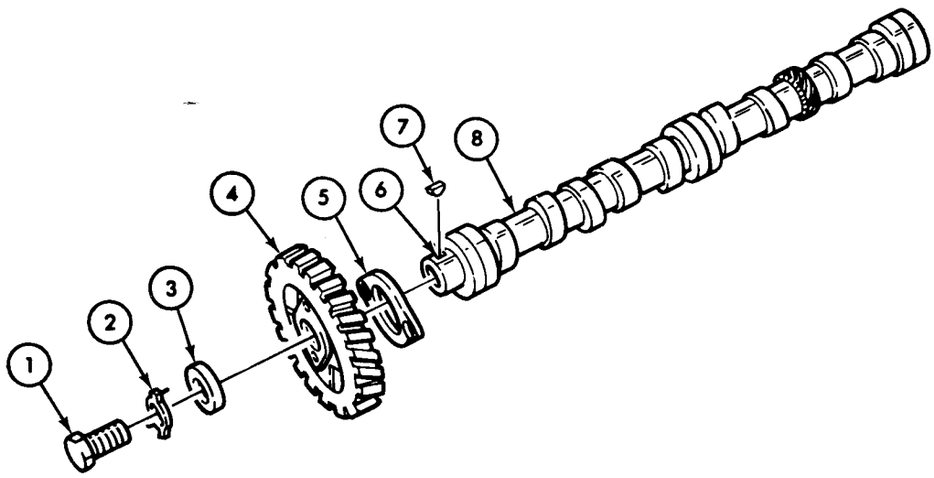

END OF TASK!

FOLLOW-ON TASK: Install camshaft assembly (para 3-16).

TA 157063

3-30. Crankshaft, Main Bearings, and Related Parts Repair

This task covers:

a. Disassembly
b. Cleaning and Inspection
c. Fitting Main Bearings
d. Reassembly

INITIAL SETUP:

Applicable Models
All

Equipment Condition Reference
Para 3-15

Condition Description
Crankshaft removed.

Test Equipment
Telescopic gage
Inside and outside micrometers
Dial indicator assembly
Two V-blocks

Special Tools
Torque wrench (0-175 lb-ft)

Special Environmental Conditions
Clean, well-ventilated work area.

Materials/Parts
OE/HDO oil
Plasti-gage
GAA grease
Three main bearings
Woodruff key

Personnel Required
One mechanic

General Safety Instructions
None

Manual References
TM 9-2320-218-34P

STEP NO.	LOCATION	ITEM	ACTION	REMARKS

CAUTION

Handle crankshaft (1) with care to avoid damage to finished surfaces.

a. DISASSEMBLY

1.	Crankshaft (1)	Woodruff key (2)	Remove from keyway (3).	Discard key (2).

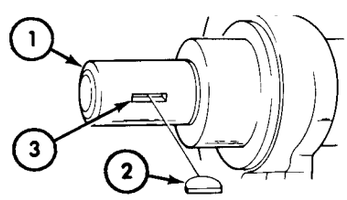

TA 157064

3-30. Crankshaft, Main Bearings, and Related Parts Repair (Cont'd)

STEP NO.	LOCATION	ITEM	ACTION	REMARKS
b. CLEANING AND INSPECTION				
2.		Crankshaft (1), gear (4), pulley (5), and three main bearing caps (6)	Clean in accordance with instructions in paragraph 3-19.	

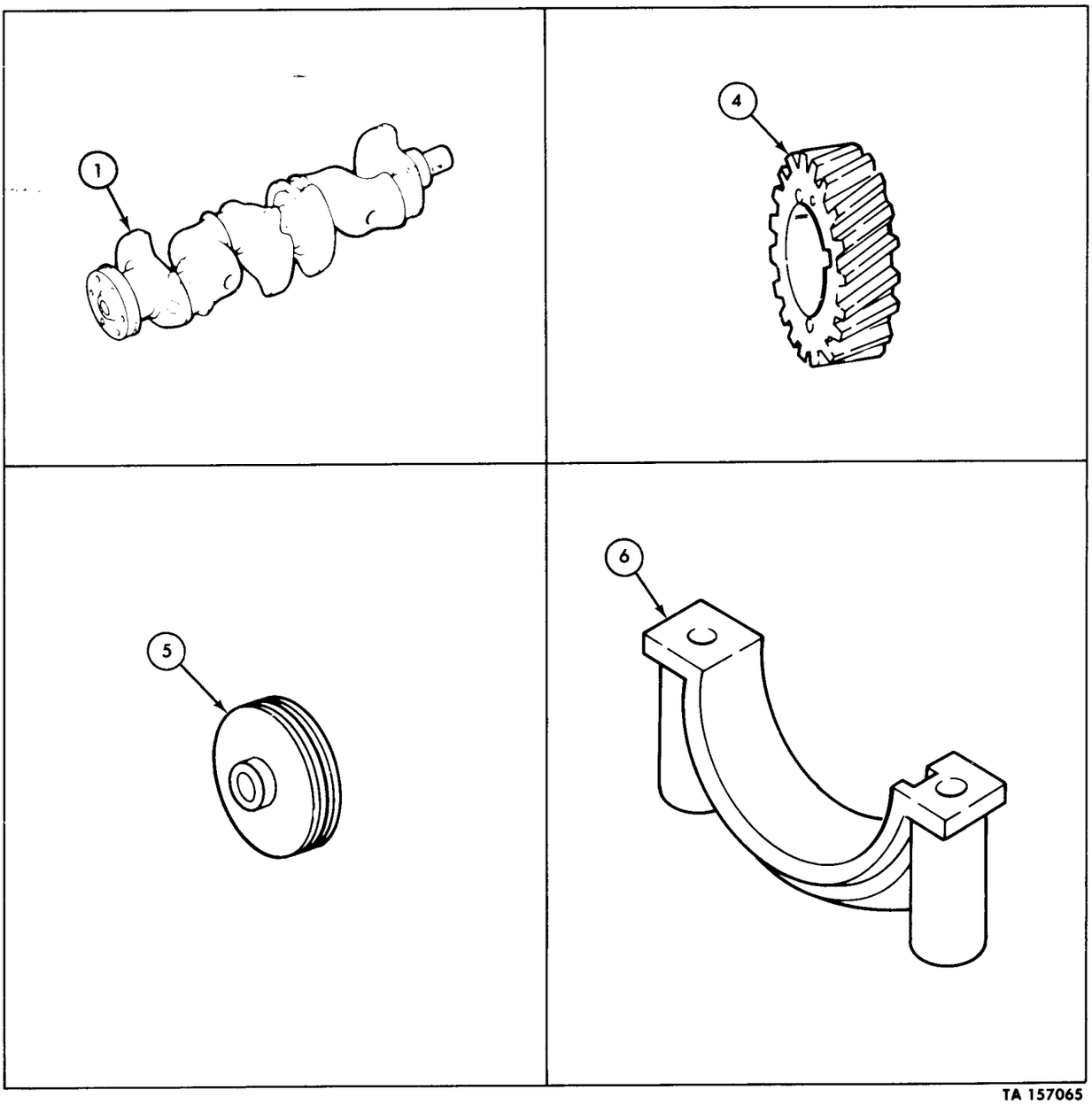

TA 157065

3-30. Crankshaft, Main Bearings, and Related Parts Repair (Cont'd)

STEP NO.	LOCATION	ITEM	ACTION	REMARKS
		NOTE		
		Refer to paragraph 3-20 for general inspection instructions.		
3.		Crankshaft (1)	*a.* Check main and rod journals for cracks, breaks, scratches, marring, scoring, grooving, and wear.	Replace crankshaft (1) if main and rod journals are cracked, broken, scratched, marred, scored, grooved, or worn (see table 3-8 for specifications). Repair minor imperfections with an oil stone.
			b. Check oil seal rear hub surface for grooving, scoring, roughness, and wear.	Replace crankshaft (1) if rear hub oil seal surface is grooved, scored, rough, or worn (see table 3-8 for specifications).
			c. Check all journals for out-of-roundness and taper.	Replace crankshaft (1) if journals are out-of-round or tapered. Use outside micrometer (2) (see table 3-8 for specifications).
4.		Crankshaft (1)	Check alinement as follows: *a.* Place on V-blocks (8) at end journals (3) and (6). *b.* Mount dial indicator tip (4) on center journal (7). *c.* "Zero" dial indicator (5).	
			d. Rotate crankshaft (1) 360° and record runout.	If runout is in excess of specifications, replace crankshaft (1) (see table 3-8).

3-30. Crankshaft, Main Bearings, and Related Parts Repair (Cont'd)

STEP NO.	LOCATION	ITEM	ACTION	REMARKS

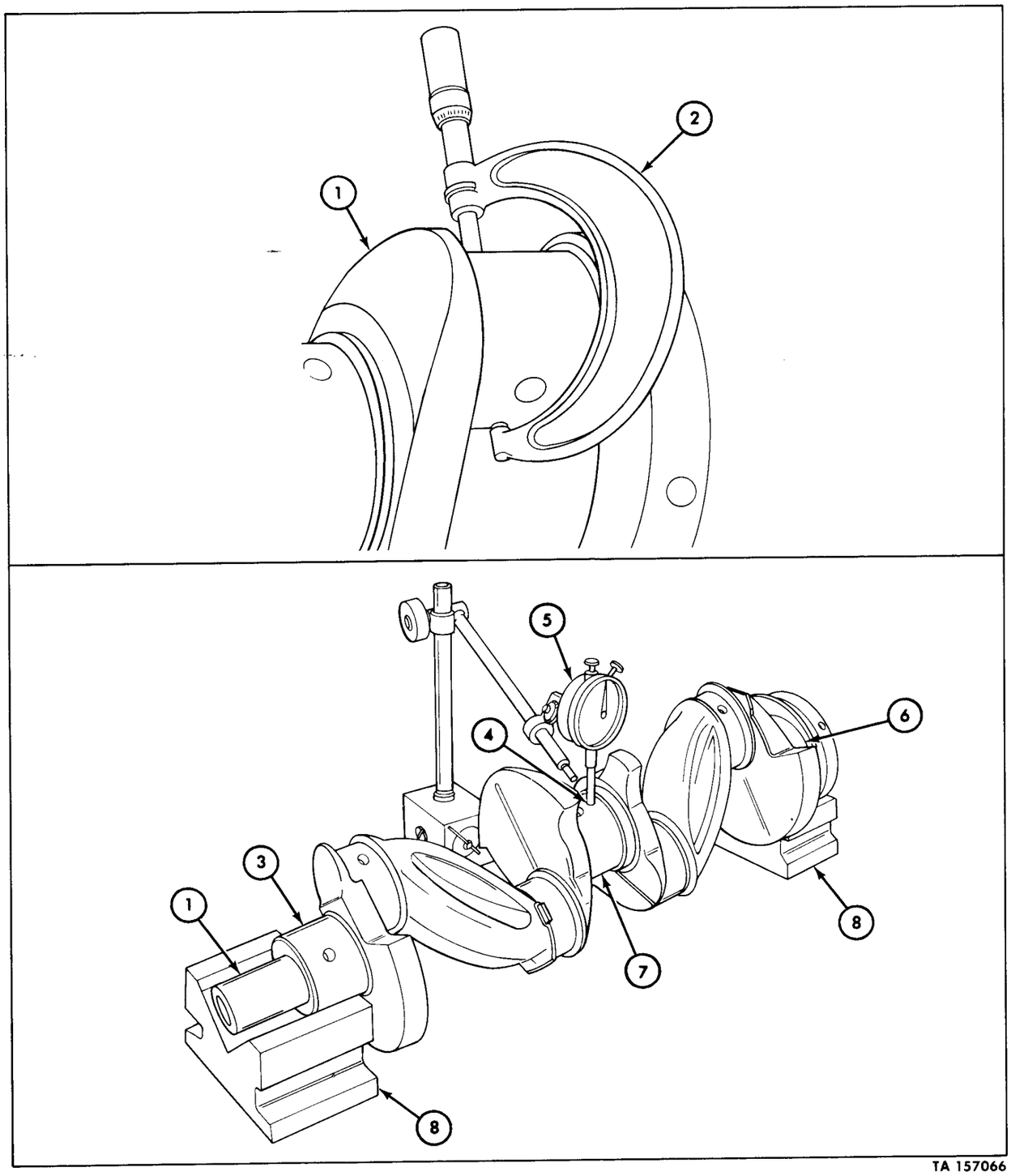

TA 157066

3-30. Crankshaft, Main Bearings, and Related Parts Repair (Cont'd)

STEP NO.	LOCATION	ITEM	ACTION	REMARKS
5.	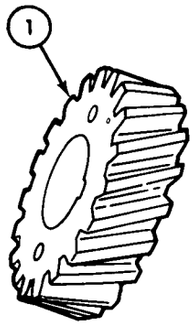	Crankshaft gear (1)	*a.* Inspect for missing teeth, galling, cracks, breaks, and wear.	Replace gear (1) if galled, cracked, broken, teeth missing, or worn.
			b. Check gear for uneven tooth contact pattern.	Replace gear (1) if tooth contact pattern is uneven.
			c. Check keyway for nicks.	Replace gear (1) if keyway is nicked. If crankshaft gear is replaced, camshaft gear must also be replaced. See table 3-8 for gear (1) specifications.
6.	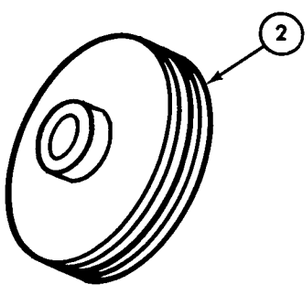	Crankshaft pulley (2)	*a.* Inspect for cracks, breaks, bends, bent sheaves, broken edges, and wear.	Replace pulley (2) if cracked, broken, bent, sheaves bent, edges broken, or worn.
			b. Check belt grooves for corrosion and roughness.	Use hone or abrasive to correct. Replace pulley (2) if corrosion or roughness cannot be corrected.
			c. Check keyway for wear and damage.	Replace pulley (2) if keyway is worn or damaged.
			d. Check oil seal hub surface for galling, wear, and grooving.	Replace pulley (2) if oil seal hub surface is galled, worn, or grooved.

TA 157067

3-30. Crankshaft, Main Bearings, and Related Parts Repair (Cont'd)

STEP NO.	LOCATION	ITEM	ACTION	REMARKS
7.	Crankshaft (3)	Flywheel mounting holes (5)	Check for stripped threads.	Replace crankshaft (3) if threads are stripped.
8.	Crankshaft (3)	Flywheel mounting surface (4)	Visually check for straightness.	Replace crankshaft (3) if surface (4) is not straight.

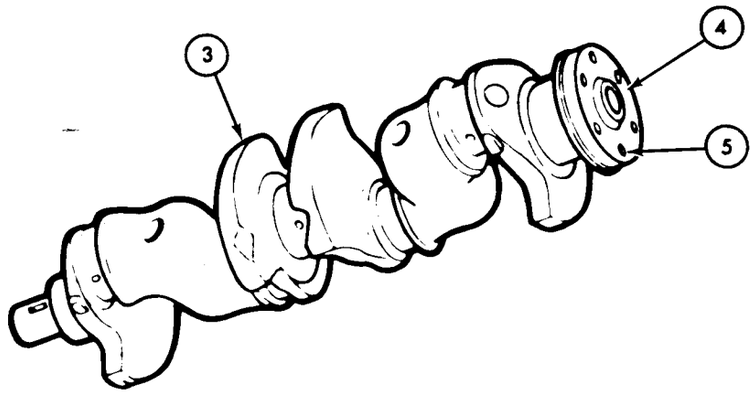

9.		Three main bearing caps (6)	Check for cracks, breaks, distortion, and wear.	Replace engine assembly if cracked, broken, distorted, or worn.

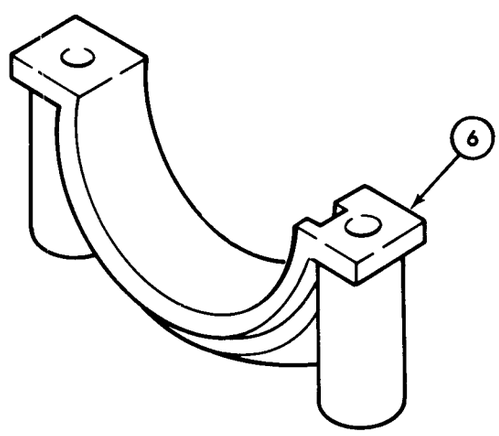

TA 157068

3-30. Crankshaft, Main Bearings, and Related Parts Repair (Cont'd)

STEP NO.	LOCATION	ITEM	ACTION	REMARKS
	c. FITTING MAIN BEARINGS			
		NOTE		
		Main bearing caps (2) are not interchangeable, and are line bored with cylinder block (1) as an assembly. Install caps (2) in original location.		
10.		Three main bearing caps (2)	Position to cylinder block (1) and secure with six capscrews (4).	Arrows on caps (2) face forward. Coat threads with GAA grease and tighten 55-60 lb-ft (75-82 N•m).
11.	Cylinder block (1)	Three main bearing bores (3)	Measure inside diameter as follows:	
			a. Measure vertical diameter (6) 1/4 in. (6.35 mm) from each outer edge (5).	Use telescopic gage and inside micrometer.
			b. Measure diameter (7) and (8) 45° left and right of vertical (6) 1/4 in. (6.35 mm) from each outer edge (5).	Replace engine assembly if main bearing bores (3) do not meet specifications (see table 3-8).
			c. Remove six capscrews (4) and detach three main bearing caps (2) from cylinder block (1).	

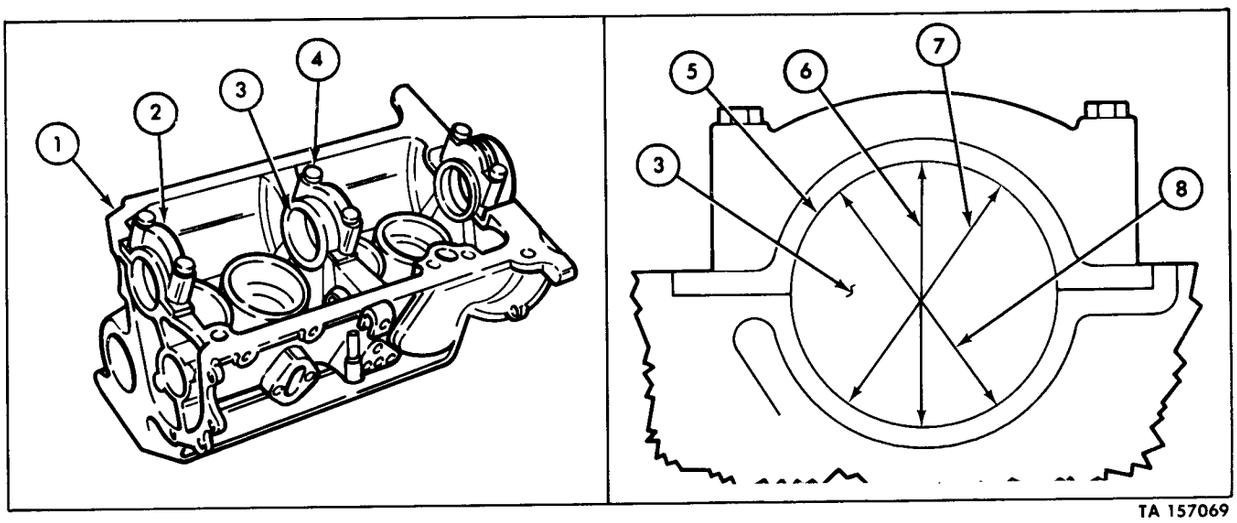

TA 157069

3-30. Crankshaft, Main Bearings, and Related Parts Repair (Cont'd)

STEP NO.	LOCATION	ITEM	ACTION	REMARKS
		NOTE		
		The center main flanged bearing halves are not interchangeable with the front and rear bearing halves.		
12.		Three new main bearing upper halves (10)	Install in cylinder block (1).	Make sure tangs on bearing halves (10) seat in grooves in block (1).
13.		Crankshaft (9)	Place in cylinder block (1).	Rotate several times to seat.
14.		Three new main bearing lower halves (11)	Install in three main bearing caps (2).	Make sure tangs on bearing halves (11) seat in grooves on caps (2).

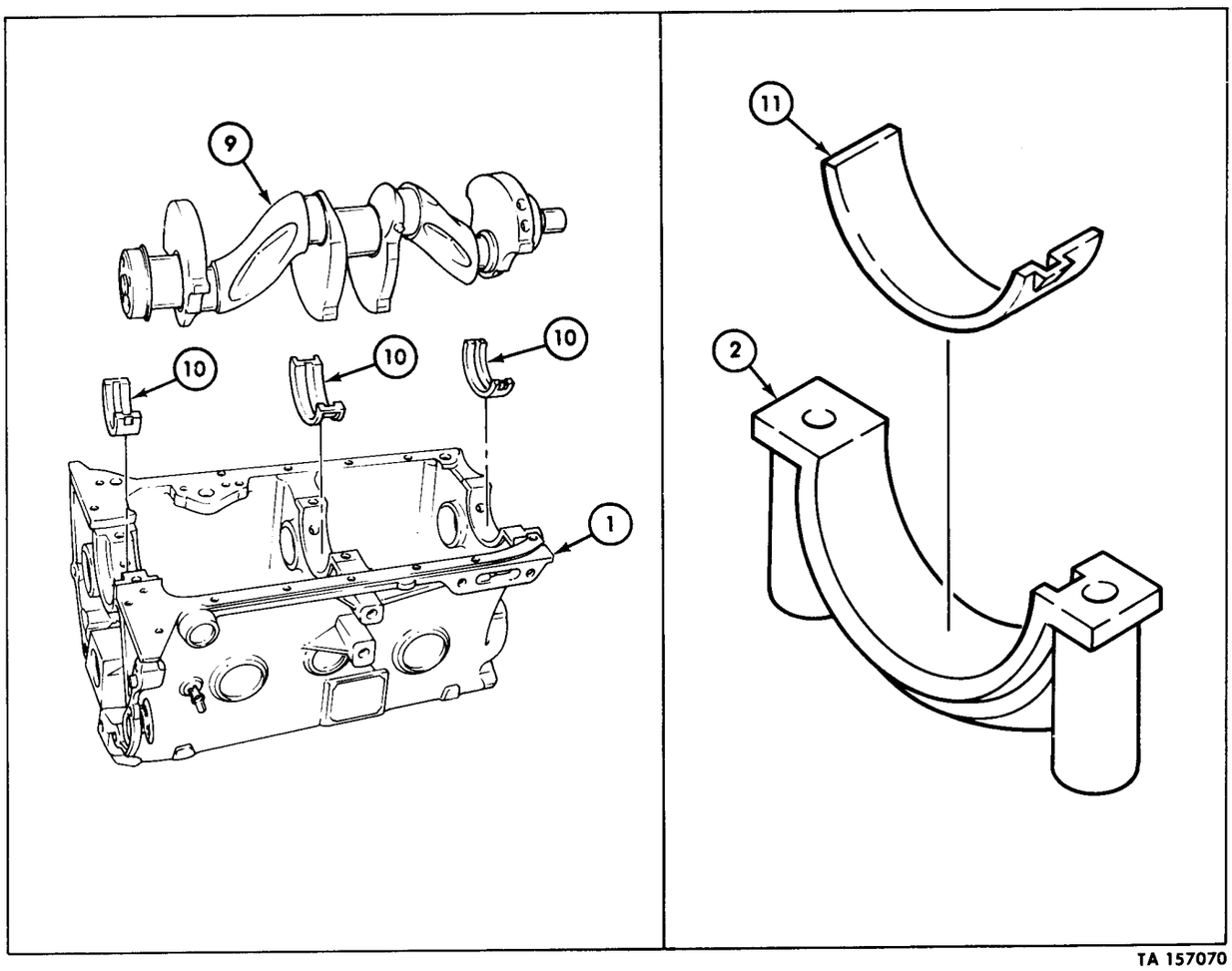

TA 157070

3-30. Crankshaft, Main Bearings, and Related Parts Repair (Cont'd)

STEP NO.	LOCATION	ITEM	ACTION	REMARKS
		CAUTION		
		Do not rotate crankshaft (3) after plasti-gage (8) has been placed on crankshaft journals (4).		
		NOTE		
		All three main bearing clearances are checked the same way; check one at a time.		
15.		Plasti-gage (8)	Place on crankshaft main bearing journal (4).	
16.		Main bearing cap (2)	Place on cylinder block (5) and secure with two capscrews (1).	Arrow on cap (2) must point toward front of block (5). Tighten evenly 55-60 lb-ft (75-82 N•m).
17.	Main bearing cap (2) to cylinder block (5)	Two capscrews (1)	Remove and detach main bearing cap (2).	
18.		Plasti-gage (8)	*a.* Measure width of spread with gage (6).	Use .001-.003 in. (.0254-.0762 mm) gage (6) (see table 3-8 for clearance specifications).
			b. Remove from journal (4) and main bearing half (7).	Make sure all plasti-gage (8) is cleaned off of crankshaft journal (4) and bearing half (7).

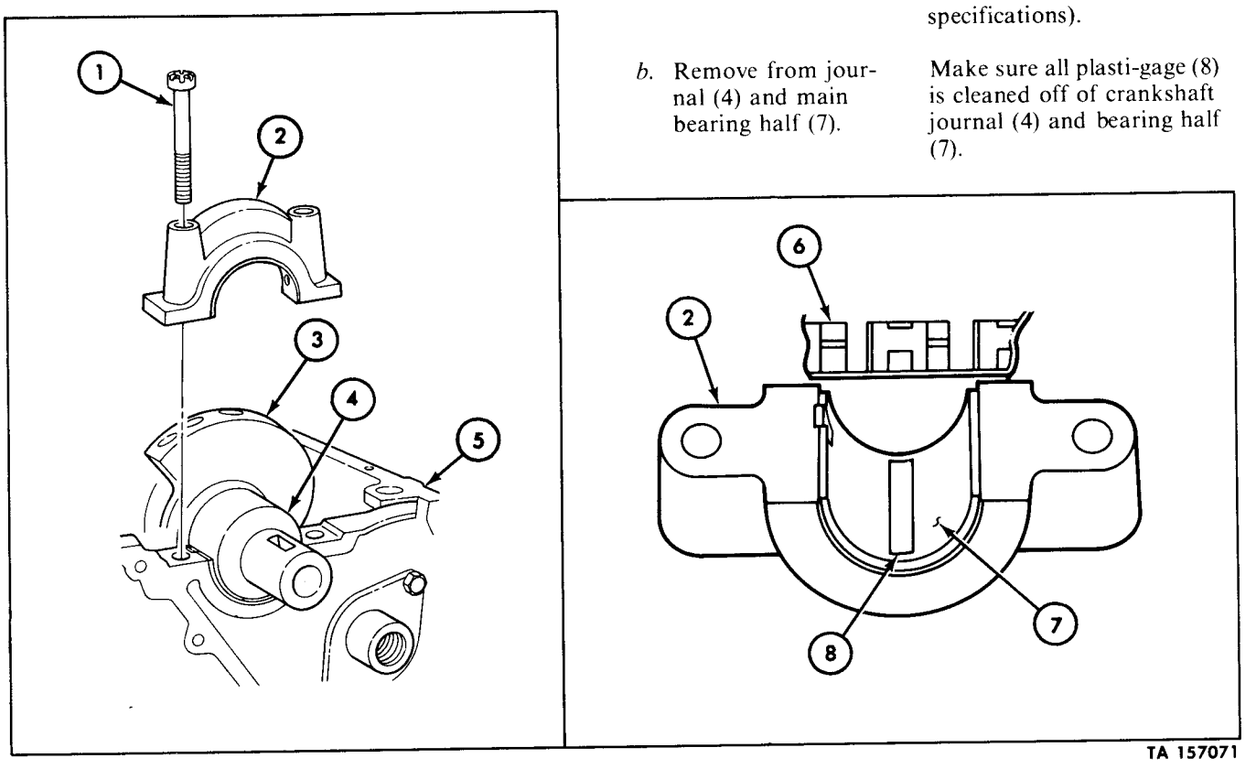

TA 157071

3-30. Crankshaft, Main Bearings, and Related Parts Repair (Cont'd)

STEP NO.	LOCATION	ITEM	ACTION	REMARKS
d. REASSEMBLY				
		NOTE		
		Lubricate all parts with OE/HDO oil during assembly.		
19.		New woodruff key (14)	Insert into slot (12) of crankshaft (3).	
20.		Crankshaft gear (10)	*a.* Aline keyway (11) to key (14).	Timing mark (9) on gear (10) must face out.
			b. Install on crankshaft (3) flush with shoulder (13).	

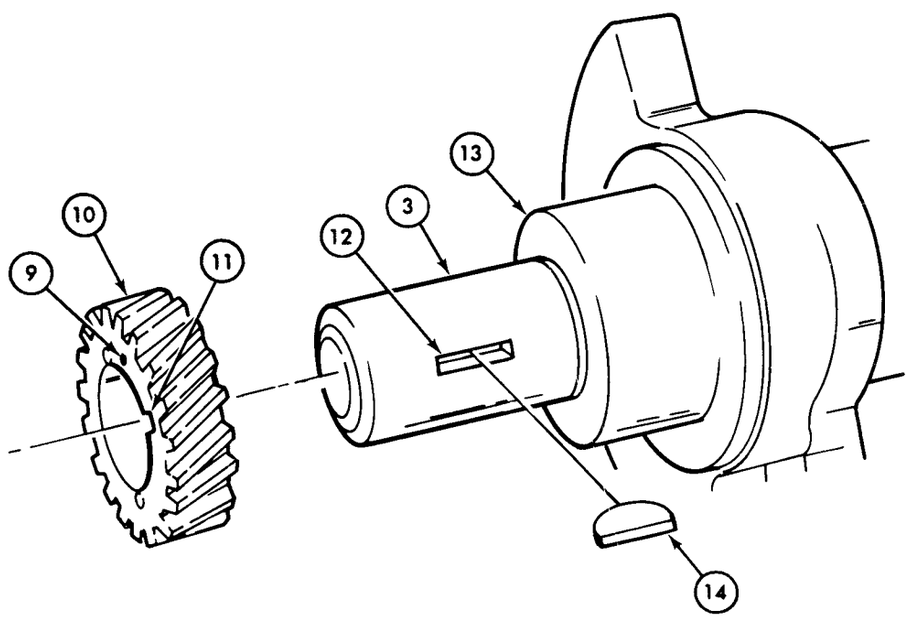

END OF TASK!

FOLLOW-ON TASK: Install crankshaft assembly (para 3-16).

TA 157072

3-31. Flywheel and Clutch Assemblies Cleaning and Inspection

This task covers:

a. Flywheel Assembly Cleaning and Inspection *b. Clutch Assembly Cleaning and Inspection*

INITIAL SETUP:

Applicable Models
All

Equipment Condition Reference
Para 3-15

Condition Description
Engine disassembled.

Test Equipment
None

Special Tools
None

Special Environmental Conditions
Clean, well-ventilated work area.

Materials/Parts
None

Personnel Required
One mechanic

General Safety Instructions
None

Manual References
TM 9-2320-218-34P

STEP NO.	LOCATION	ITEM	ACTION	REMARKS
		a. FLYWHEEL ASSEMBLY CLEANING AND INSPECTION		
1.		Flywheel assembly (1)	*a.* Clean in accordance with instructions in paragraph 3-19.	
		NOTE Refer to paragraph 3-20 for general inspection instructions.		
			b. Inspect for cracks, breaks, scoring, and stripped threads.	Replace flywheel assembly (1) if cracked, broken, scored, or threads are stripped.
2.		Ring gear (2)	Inspect for chipped, cracked, broken, or worn teeth.	Replace gear (2) if teeth are chipped, cracked, broken, or worn.

3-31. Flywheel and Clutch Assemblies Cleaning and Inspection (Cont'd)

STEP NO.	LOCATION	ITEM	ACTION	REMARKS
b. CLUTCH ASSEMBLY CLEANING AND INSPECTION				
3.		Pressure plate assembly (3) and clutch disc assembly (4)	Clean in accordance with instructions in paragraph 3-19.	

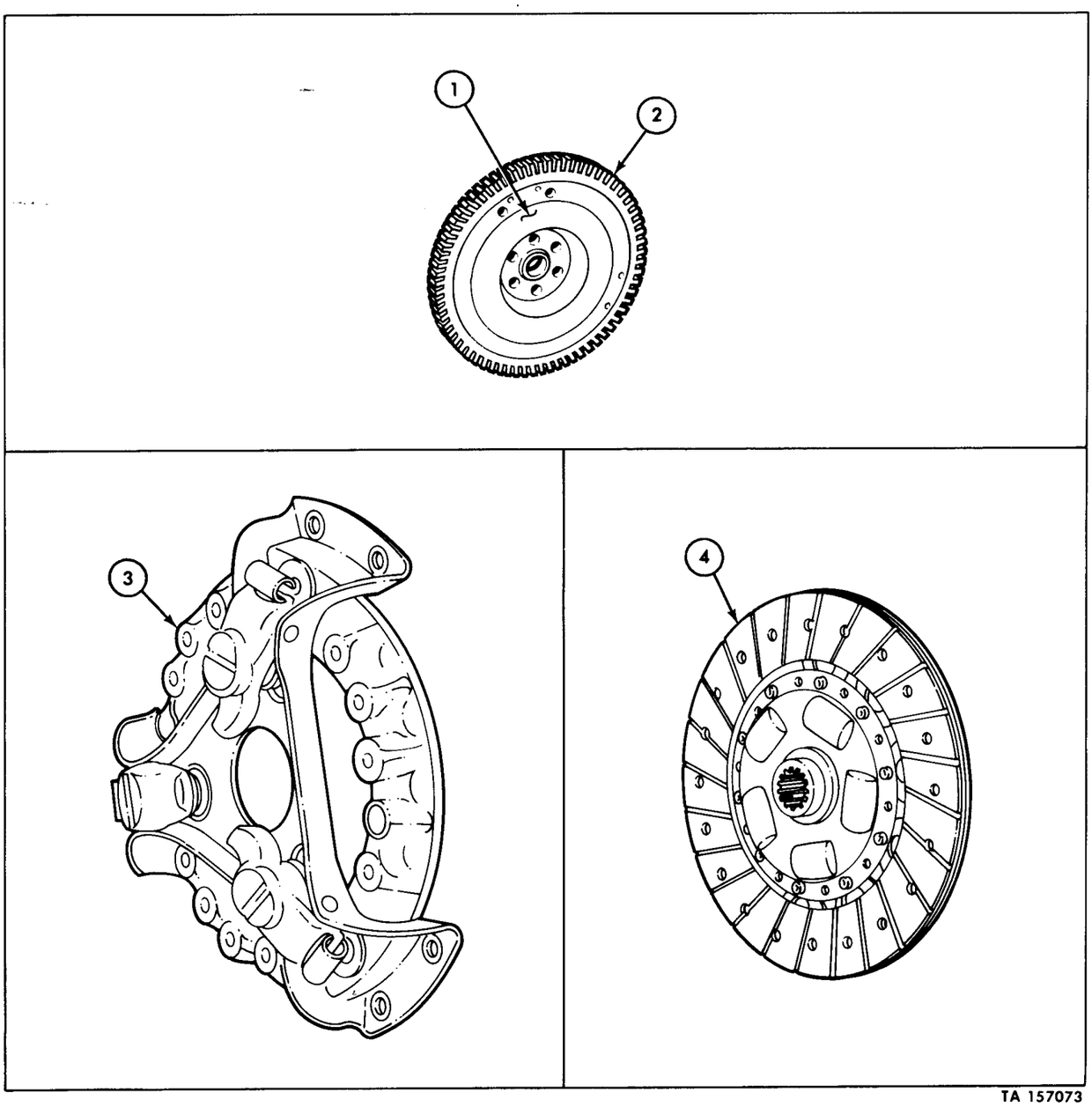

TA 157073

3-31. Flywheel and Clutch Assemblies Cleaning and Inspection (Cont'd)

STEP NO.	LOCATION	ITEM	ACTION	REMARKS
		NOTE Refer to paragraph 3-20 for general inspection instructions.		
4.		Pressure plate (1)	Inspect for breaks, cracks, ridges, and scoring.	Replace pressure plate assembly if broken, cracked, ridged, or scored.
5.		Pressure plate bracket assembly (2)	Inspect for cracks and breaks.	Replace pressure plate assembly if cracked or broken.
6.		Three clutch plate levers (3) and clutch springs (4)	Inspect for looseness, cracks, and breaks.	Replace pressure plate assembly if loose, cracked, or broken.
7.		Clutch disc assembly (5)	Inspect for wear, breaks, cracks, loose or broken rivets, and oil and grease contamination.	Replace if worn, broken, cracked, rivets loose or broken, or contaminated with oil or grease.

3-31. Flywheel and Clutch Assemblies Cleaning and Inspection (Cont'd)

STEP NO.	LOCATION	ITEM	ACTION	REMARKS

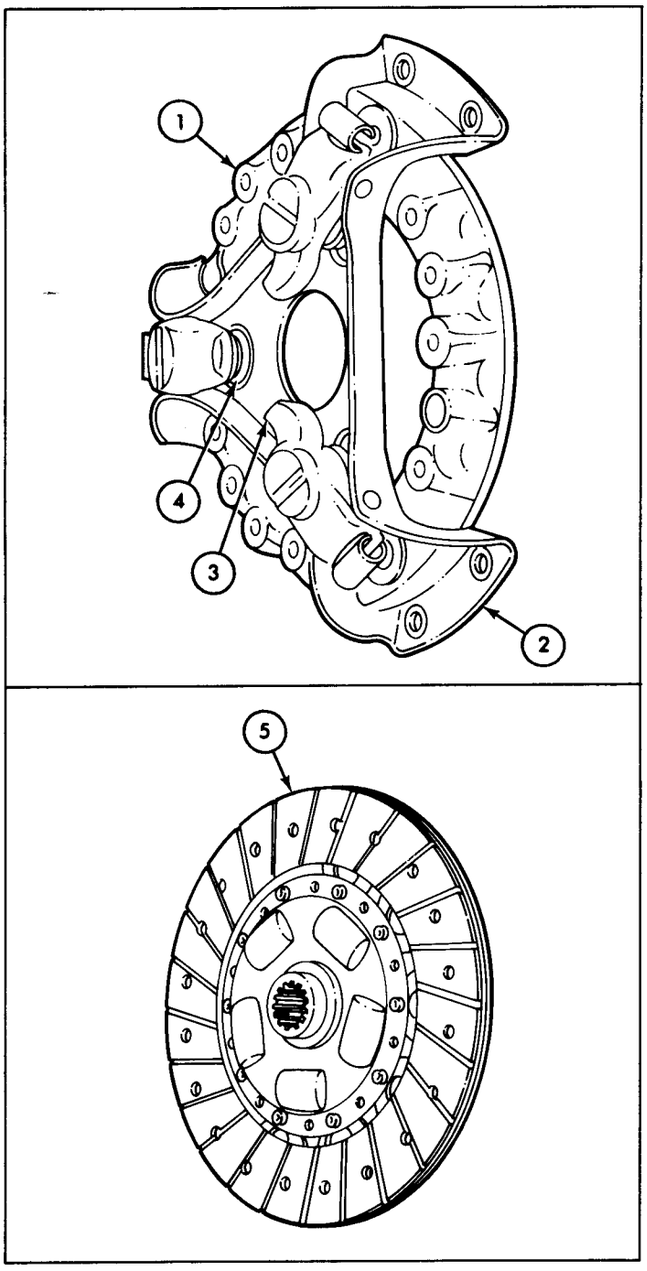

END OF TASK!

FOLLOW-ON TASKS:
- Install flywheel (para 3-16).
- Install clutch pressure plate and disc (para 2-13).

TA 157074

3-32. Oil Pump and Strainer Repair

This task covers:

a. Disassembly
b. Cleaning and Inspection
c. Repair
d. Reassembly

INITIAL SETUP:

Applicable Models	Equipment Condition Reference	Condition Description
All	Para 3-15	Engine disassembled.

Test Equipment
None

Special Tools
Arbor press
Feeler gage
Idler gear shaft adapter

Special Environmental Conditions
Clean, well-ventilated work area.

Materials/Parts
OE/HDO oil
Cotter pin

Personnel Required
One mechanic

General Safety Instructions
None

Manual References
TM 9-2320-218-34P

STEP NO.	LOCATION	ITEM	ACTION	REMARKS
a. DISASSEMBLY				
1.	Oil pump cover (3) to oil pump (4)	Capscrew-assembled lockwasher (1) and washer (2)	Remove.	
2.		Oil pump cover (3)	Remove from oil pump (4).	

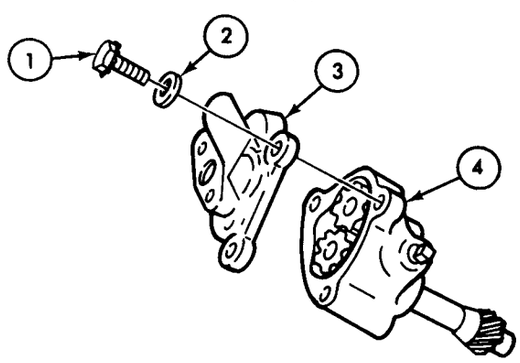

TA 157075

3-32. Oil Pump and Strainer Repair (Cont'd)

STEP NO.	LOCATION	ITEM	ACTION	REMARKS
3.	Oil pump cover (3)	Cotter pin (8)	Remove.	Discard cotter pin (8).
4.		Retainer (7), spring (6), and pressure relief valve (5)	Remove from cover (3).	
5.	Oil pump body (4)	Idler gear (9)	Remove from idler gear shaft (10).	

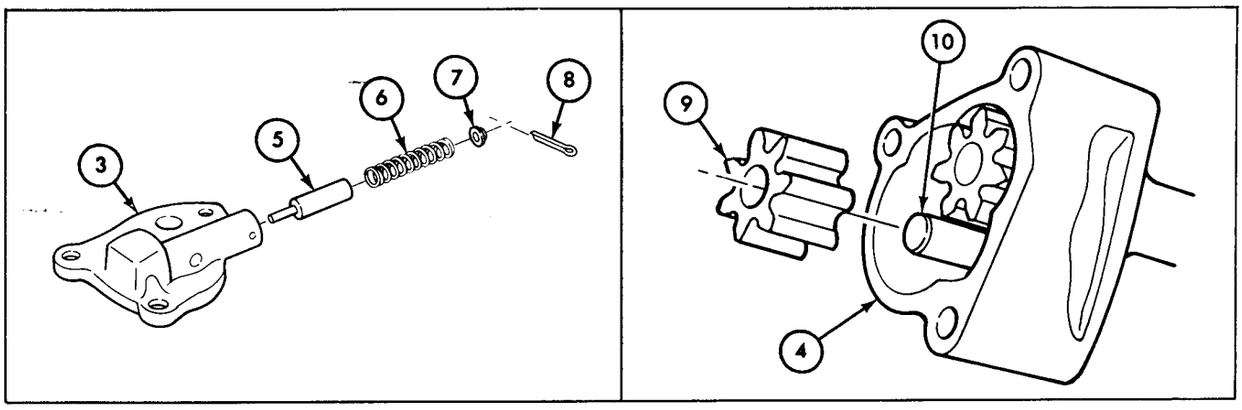

6.		Drive gear shaft (12)	Press from drive gear (11) and remove from body (4).	Use arbor press and adapter.
7.		Drive gear (11)	Remove from pump body (4).	
8.		Idler gear shaft (10)	Press from pump body (4).	Use arbor press and adapter.

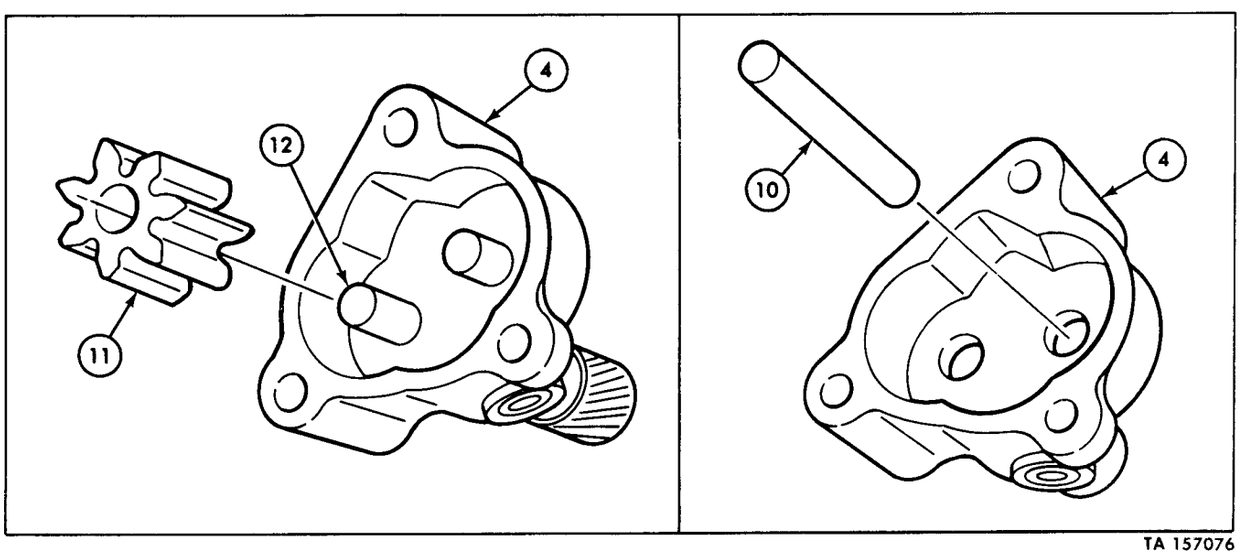

TA 157076

3-32. Oil Pump and Strainer Repair (Cont'd)

STEP NO.	LOCATION	ITEM	ACTION	REMARKS
	b. CLEANING AND INSPECTION			
9.		Oil pump and strainer assembly components	Clean in accordance with instructions in paragraph 3-19.	
		NOTE Refer to paragraph 3-20 for general inspection instructions.		
10.	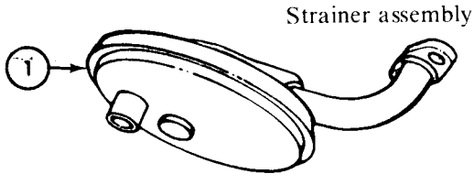	Strainer assembly (1)	Check for cracks, breaks, distortion, plugged screen, and scored gasket surface.	Replace if cracked, broken, distorted, screen plugged, or gasket surface scored.
11.	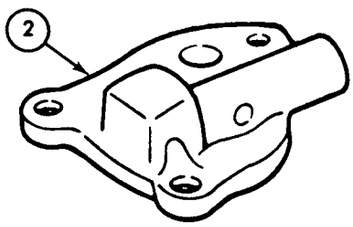	Pump cover (2)	*a.* Inspect for cracks, breaks, warpage, scoring, rough gasket mating surfaces, and wear.	Replace oil pump assembly if cracked, broken, warped, scored, worn, or rough gasket mating surfaces (see table 3-9 for specifications).
			b. Check pressure regulator bore for scores, scratches, and out-of-roundness.	Replace oil pump assembly if bore is scored, scratched, or out-of-round (see table 3-9 for specifications).
12.	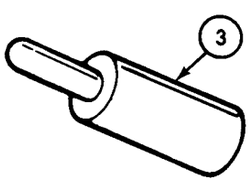	Pressure relief valve (3)	Check for breaks, cracks, scoring, distortion, and wear.	Replace oil pump assembly if broken, cracked, scored, distorted, or worn (see table 3-9 for specifications).
13.	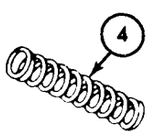	Pressure relief valve spring (4)	Inspect coils for breaks, twists, distortions, collapse, and wear.	Replace oil pump assembly if coils are broken, twisted, distorted, collapsed, or worn (see table 3-9 for specifications).
14.	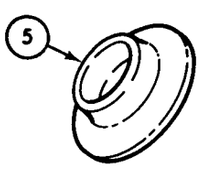	Retainer (5)	Inspect for cracks, breaks, and warpage.	Replace oil pump assembly if cracked, broken, or warped.

TA 157077

3-32. Oil Pump and Strainer Repair (Cont'd)

STEP NO.	LOCATION	ITEM	ACTION	REMARKS
15.		Drive gear (6) and idler gear (7)	Inspect for breaks, cracks, scoring, missing teeth, and wear.	Replace oil pump assembly if broken, cracked, scored, teeth missing, or worn (see table 3-9 for specifications).
16.		Pump body (8)	*a.* Check for cracks, breaks, distortion, warpage, gasket surface scoring, bores out-of-round, and wear.	Replace oil pump assembly if broken, cracked, warped, gasket surface scored, bores out-of-round, or worn (see table 3-9 for specifications).
			b. Check for stripped and missing threads.	Replace oil pump assembly if threads are stripped or missing.

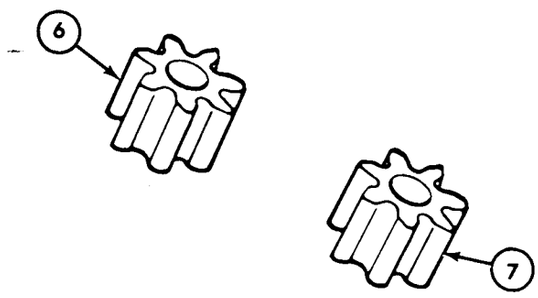

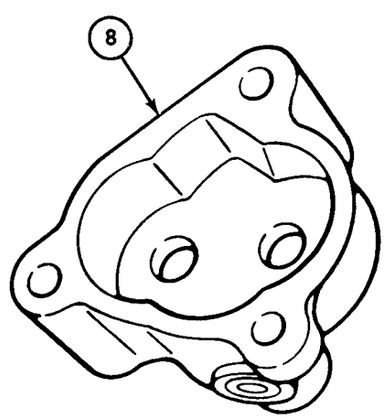

TA 157078

3-32. Oil Pump and Strainer Repair (Cont'd)

STEP NO.	LOCATION	ITEM	ACTION	REMARKS
17.		Idler gear shaft (1)	Check for breaks, cracks, distortion, galling, scoring, and wear.	Replace if broken, cracked, distorted, galled, scored, or worn (see table 3-9 for specifications).

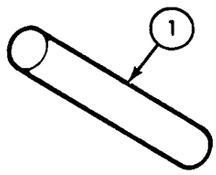

18.		Oil pump drive gear shaft assembly (2)	*a.* Inspect for breaks, cracks, distortion, galling, scoring, and wear.	Replace if cracked, broken, distorted, galled, scored, or worn (see table 3-9 for specifications).
			b. Check for broken, cracked, scored, missing, or worn gear teeth.	Replace drive gear shaft (2) if gear teeth are broken, cracked, scored, missing, or worn.
19.		Drive gear shear pin (3)	Check for sheared condition.	Replace shaft assembly if drive pin (3) is sheared.

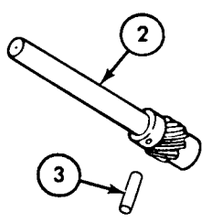

c. REPAIR

20.		Oil pump components	Repair as necessary in accordance with instructions in paragraph 3-21.	

TA 157079

3-32. Oil Pump and Strainer Repair (Cont'd)

STEP NO.	LOCATION	ITEM	ACTION	REMARKS
d. REASSEMBLY				

CAUTION

Do not hammer idler gear shaft (1) in place.

NOTE

Lubricate all oil pump components with OE/HDO oil during assembly.

21.		Idler gear shaft (1)	Press into bore (5) of oil pump body (6) until .002-.010 in. (.0508-.2540 mm) below pump body face (4).	Support pump body (6) and use arbor press and adapter.
22.		Drive gear shaft (2)	Place into bore (7) of oil pump body (6).	
23.		Drive gear (10)	Press onto drive gear-shaft (2) until face (9) is flush with shaft end (8) within .010 in. (.2540 mm).	Support pump body (6) and use arbor press.

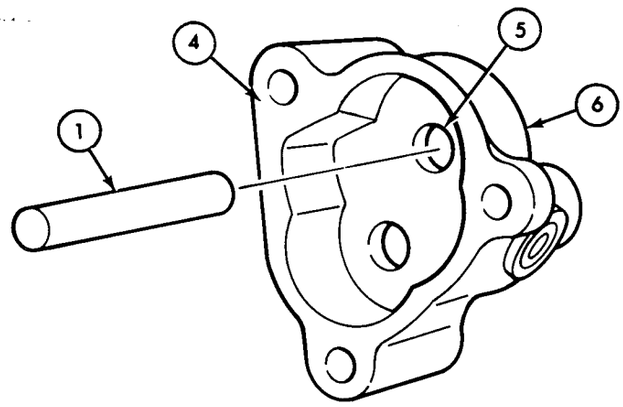

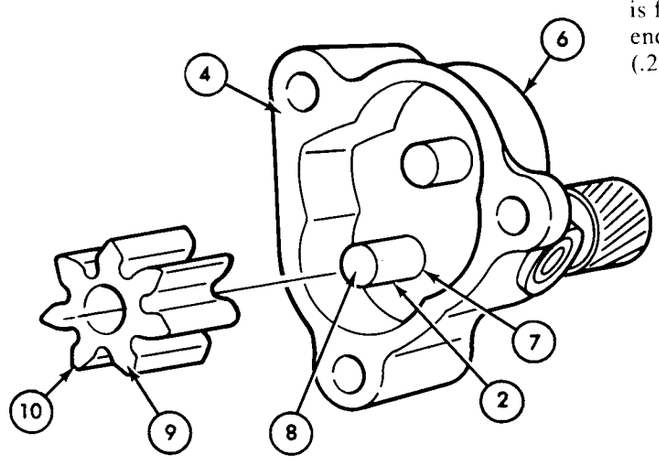

TA 157080

3-32. Oil Pump and Strainer Repair (Cont'd)

STEP NO.	LOCATION	ITEM	ACTION	REMARKS
24.		Idler gear (1)	Slide onto idler gear-shaft (2).	Check gears (1) and (3) for free rotation.
25.		Idler gear (1) and drive gear (3)	Measure between teeth and oil pump body (5) to obtain radial clearance.	Use feeler gage (4). Maximum clearance is .005 in. (.1270 mm) (see table 3-9 for specifications).

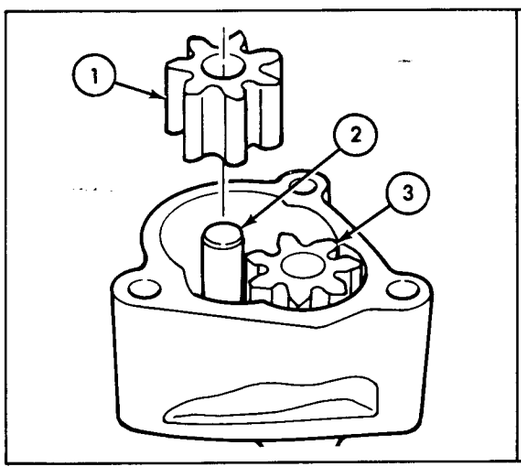

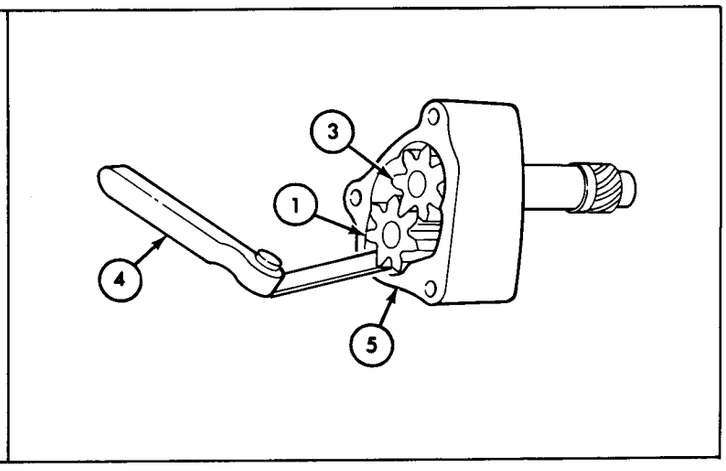

26.		Oil pump body (5)	Measure gear end clearance as follows: *a.* Place straight edge (6) across pump body face (7). *b.* Measure clearance between straight edge (6) and gears (1) and (3).	 Use feeler gage (4). Maximum clearance is .006 in. (.1524 mm) (see table 3-9 for specifications).

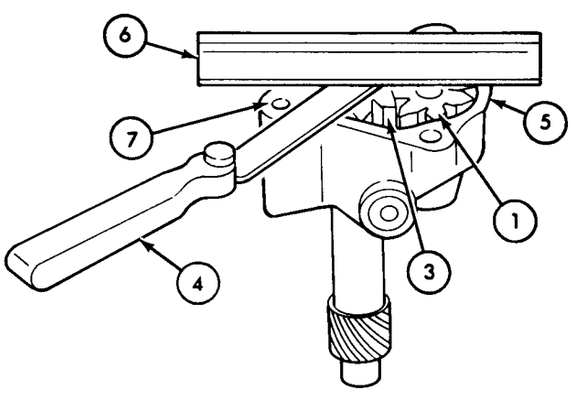

TA 157081

3-32. Oil Pump and Strainer Repair (Cont'd)

STEP NO.	LOCATION	ITEM	ACTION	REMARKS
27.		Pressure valve (10), spring (11), and retainer (12)	*a.* Install in oil pump cover (8).	
			b. Push retainer (12) past cotter pin hole (9).	
			c. Secure in cover (8) with new cotter pin (13).	Bend ends of cotter pin (13).
28.		Pump cover (8)	*a.* Place on pump body (5).	
			b. Aline bolt holes and secure with flat washer (15) and capscrew-assembled lockwasher (14).	Finger tighten only.

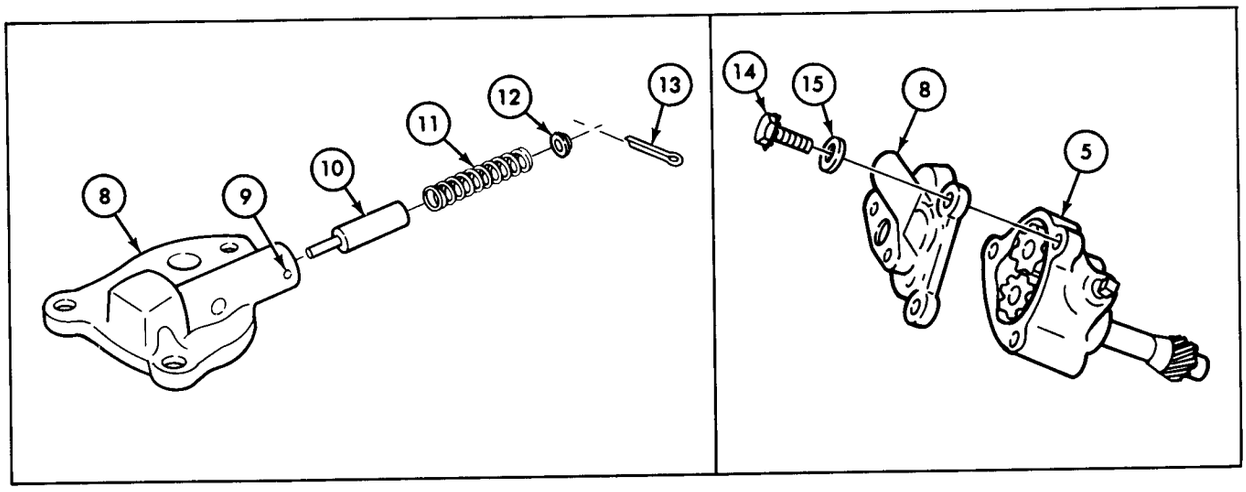

END OF TASK!

FOLLOW-ON TASK: Install oil pump and strainer (para 3-16).

TA 157082

3-33. Timing Gear Cover Repair

This task covers:

a. Disassembly
b. Cleaning and Inspection
c. Repair
d. Reassembly

INITIAL SETUP:

Applicable Models	Equipment Condition Reference	Condition Description
All	Para 3-15	Timing gear cover removed.

Test Equipment
None

Special Tools
Timing cover seal replacer

Special Environmental Conditions
Clean, well-ventilated work area.

Materials/Parts
Sealer (NSN 8030-00-543-4384)
Timing gear cover seal

Personnel Required
One mechanic

General Safety Instructions
None

Manual References
TM 9-2320-218-34P

STEP NO.	LOCATION	ITEM	ACTION	REMARKS
a. DISASSEMBLY				
1.	Cover (2)	Seal (1)	Push out from inside of cover (2).	Discard seal (1).
b. CLEANING AND INSPECTION				
2.		Timing cover and pointer assembly (2)	Clean in accordance with instructions in paragraph 3-19.	

NOTE

Refer to paragraph 3-20 for general inspection instructions.

3-33. Timing Gear Cover Repair

This task covers:

a. Disassembly
b. Cleaning and Inspection
c. Repair
d. Reassembly

INITIAL SETUP:

Applicable Models	Equipment Condition Reference	Condition Description
All	Para 3-15	Timing gear cover removed.

Test Equipment
None

Special Tools
Timing cover seal replacer

Special Environmental Conditions
Clean, well-ventilated work area.

Materials/Parts
Sealer (NSN 8030-00-543-4384)
Timing gear cover seal

Personnel Required
One mechanic

General Safety Instructions
None

Manual References
TM 9-2320-218-34P

STEP NO.	LOCATION	ITEM	ACTION	REMARKS
a. DISASSEMBLY				
1.	Cover (2)	Seal (1)	Push out from inside of cover (2).	Discard seal (1).
b. CLEANING AND INSPECTION				
2.		Timing cover and pointer assembly (2)	Clean in accordance with instructions in paragraph 3-19.	

NOTE

Refer to paragraph 3-20 for general inspection instructions.

3-33. Timing Gear Cover Repair (Cont'd)

STEP NO.	LOCATION	ITEM	ACTION	REMARKS
3.		Timing cover and pointer assembly (2)	*a.* Check for cracks, breaks, warpage, distortion, galling, and tightness of pointer.	Replace if cracked, broken, warped, distorted, galled, or pointer loose.
			b. Check gasket surface for cracks and breaks.	Replace if gasket surface is cracked or broken.
			c. Check for stripped, broken, and missing threads.	Replace if threads are stripped, broken, or missing (see table 3-10 for specifications).
			d. Check for twists and distortion.	Replace if twisted or distorted.

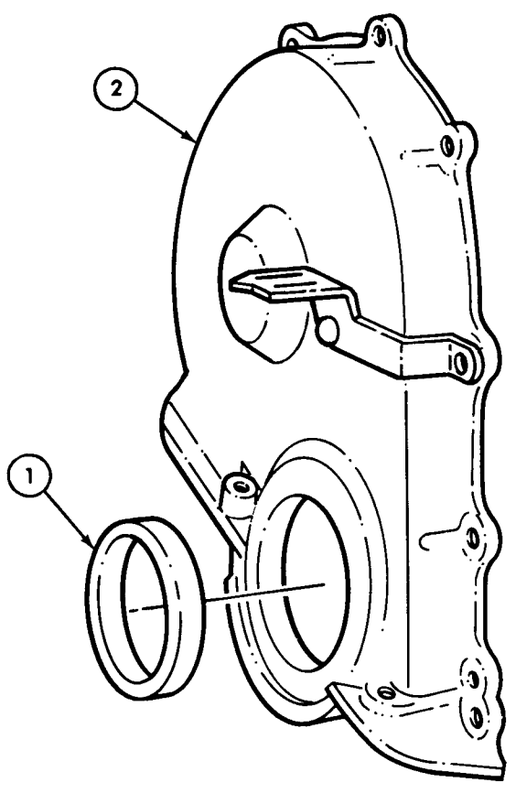

TA 157083

3-33. Timing Gear Cover Repair (Cont'd)

STEP NO.	LOCATION	ITEM	ACTION	REMARKS
c. REPAIR				
4.		Timing gear cover assembly (2)	Straighten and aline flanges and surfaces as necessary.	Refer to paragraph 3-21 for general repair instructions.
d. REASSEMBLY				
5.		Seal assembly (1)	*a.* Coat outside diameter with sealer.	
			b. Install in cover (2) until flush with front of cover (2).	Use replacer tool. Stepside of seal (1) faces in.

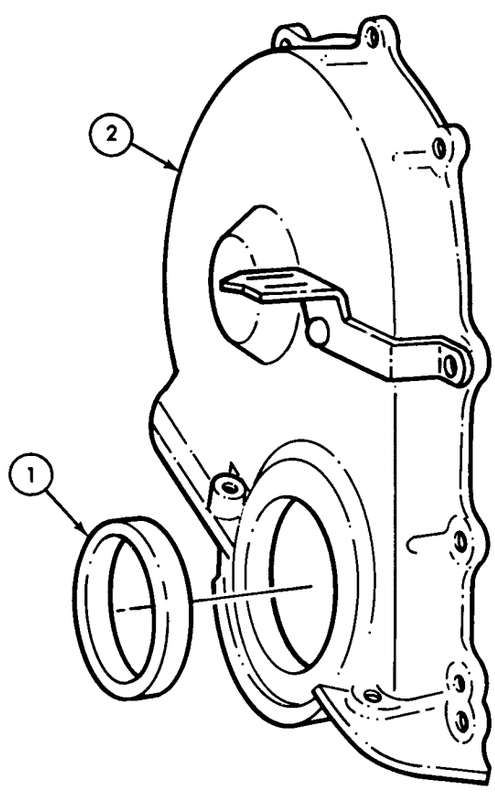

END OF TASK!

FOLLOW-ON TASK: Install timing gear cover (para 3-16).

TA 157084

3-34. Valve Push Rod Cover Repair

This task covers:

a. Cleaning and Inspection *b. Repair*

INITIAL SETUP:

Applicable Models	Equipment Condition Reference	Condition Description
All	Para 3-15	Valve push rod cover removed.

Test Equipment
None

Special Tools
None

Special Environmental Conditions
Clean, well-ventilated work area.

Materials/Parts
None

Personnel Required
One mechanic

General Safety Instructions
None

Manual References
TM 9-2320-218-34P

STEP NO.	LOCATION	ITEM	ACTION	REMARKS
a. CLEANING AND INSPECTION				
1.		Valve push rod cover	Clean in accordance with general cleaning instructions in paragraph 3-19.	

NOTE

Refer to paragraph 3-20 for general inspection instructions.

3-34. Valve Push Rod Cover Repair (Cont'd)

STEP NO.	LOCATION	ITEM	ACTION	REMARKS
2.		Valve push rod cover (1)	*a.* Check for cracks, breaks, warpage, and distortion.	Replace if cracked, broken, warped, or distorted.
			b. Check for uneven gasket surface.	Replace if gasket surface is uneven.
b. REPAIR				
3.		Gasket surface (2)	Straighten if misalined.	Refer to paragraph 3-21 for general repair instructions.

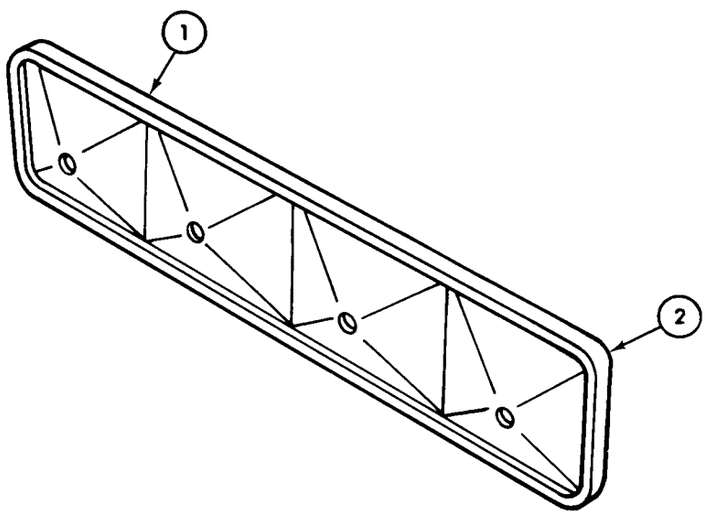

END OF TASK!

FOLLOW-ON TASK: Install valve push rod cover (para 3-16).

TA 157085

3-35. Fan Blade, Water Pump, and Pulley Cleaning and Inspection

This task covers:

Cleaning and Inspection

INITIAL SETUP:

Applicable Models
All

Equipment Condition Reference
Para 3-14

Condition Description
Fan blade, water pump, and pulley removed.

Test Equipment
None

Special Tools
None

Materials/Parts
Crocus cloth

Personnel Required
One mechanic

Manual References
TM 9-2320-218-34P

Special Environmental Conditions
Clean, well-ventilated work area.

General Safety Instructions
None

STEP NO.	LOCATION	ITEM	ACTION	REMARKS
CLEANING AND INSPECTION				
1.		Fan blade, pulley, and water pump	Clean in accordance with instructions in paragraph 3-19.	

NOTE

Refer to paragraph 3-20 for general inspection instructions.

3-35. Fan Blade, Water Pump, and Pulley Cleaning and Inspection (Cont'd)

STEP NO.	LOCATION	ITEM	ACTION	REMARKS
2.		Fan blade (3)	*a.* Inspect for cracks, breaks, bends, and distortion.	Replace if cracked, broken, bent, or distorted.
			b. Inspect for loose rivets and elongated bolt holes.	Replace if rivets are loose or bolt holes are elongated.
3.		Water pump pulley (2)	*a.* Inspect for cracks, breaks, distortion, and wear.	Replace if cracked, broken, distorted, or worn. (see table 3-11 for specifications. Minor nicks and corrosion on pulley (2) can be removed with crocus cloth.
			b. Inspect grooves for nicks and corrosion.	Replace if grooves are nicked.
			c. Inspect bolt holes for out-of-roundness.	Replace if bolt holes are out-of-round.
			d. Inspect fit of pulley on water pump shaft.	Replace pulley (2) and/or pump (1) if loose (see table 3-11 for specifications).
4.		Water pump (1)	*a.* Inspect for cracks, breaks, and warpage.	Replace if cracked, broken, or warped.
			b. Inspect impeller for cracks and breaks.	Replace if cracked, or broken.
			c. Inspect for stripped, missing, and worn threads.	Replace if threads are stripped, missing, or worn.
			d. Inspect for loose hub (5) on shaft (4).	Replace pump (1) if loose (see table 3-11 for specifications).

3-35. Fan Blade, Water Pump, and Pulley Cleaning and Inspection (Cont'd)

STEP NO.	LOCATION	ITEM	ACTION	REMARKS

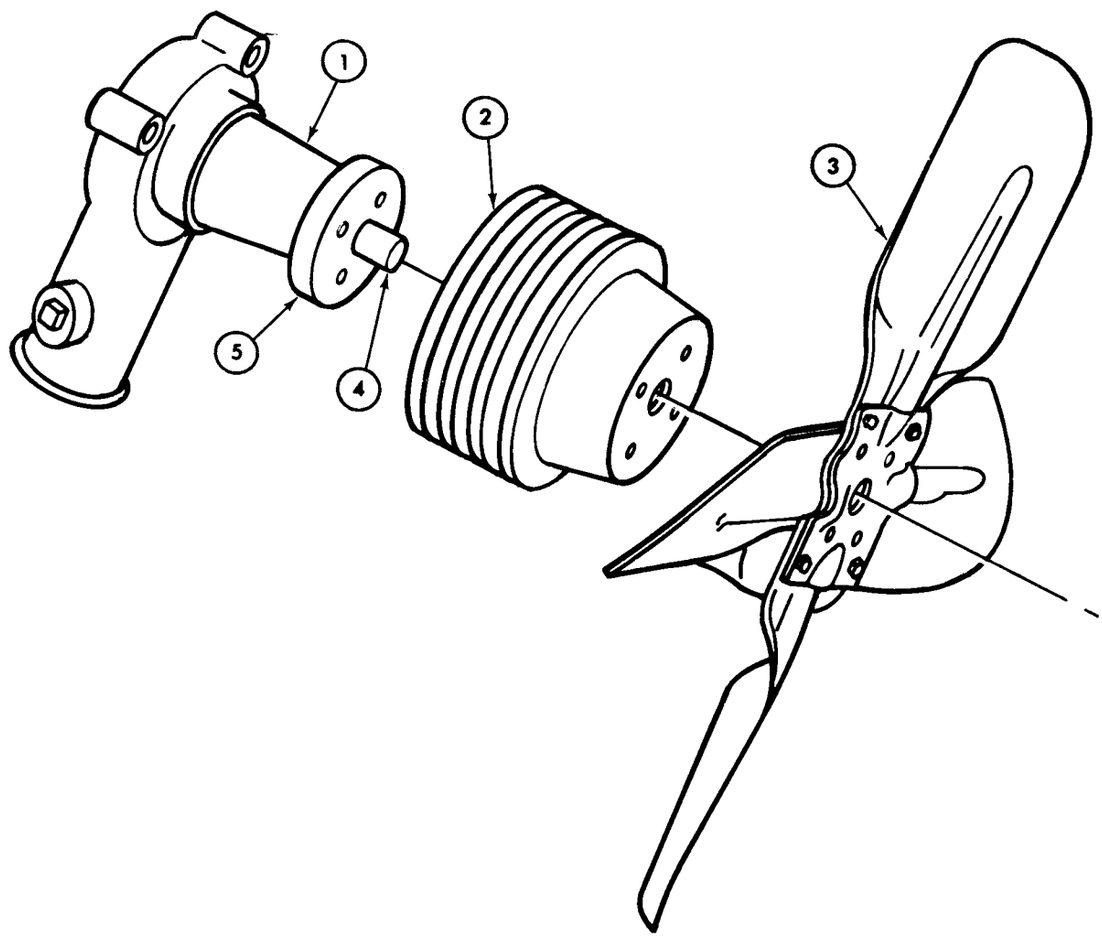

END OF TASK!

FOLLOW-ON TASK: Install fan blade, water pump, and pulley (para 3-17).

TA 157086

3-36. Intake and Exhaust Manifolds Repair

This task covers:

a. Cleaning and Inspection *b. Repair*

INITIAL SETUP:

Applicable Models	Equipment Condition Reference	Condition Description
All	Para 3-14	Intake and exhaust manifolds removed.

Test Equipment
Feeler gage

Special Tools
None

Special Environmental Conditions
Clean, well-ventilated work area.

Materials/Parts
None

Personnel Required
One mechanic

General Safety Instructions
None

Manual References
TM 9-2320-218-34P

STEP NO.	LOCATION	ITEM	ACTION	REMARKS
		a. CLEANING AND INSPECTION		
1.		Intake manifold (1) and exhaust manifold (4)	Clean in accordance with instructions in paragraph 3-19.	
		NOTE		
		Refer to paragraph 3-20 for general inspection instructions.		
2.		Intake manifold (1)	*a.* Inspect for cracks and breaks.	Replace if cracked or broken.
			b. Inspect for stripped or missing threads (3).	Replace if threads (3) are stripped or missing.
			c. Inspect for warped flanges (2).	Use straight edge and feeler gage. Replace if warped beyond .002 in. (.0508 mm).

3-36. Intake and Exhaust Manifolds Repair (Cont'd)

STEP NO.	LOCATION	ITEM	ACTION	REMARKS

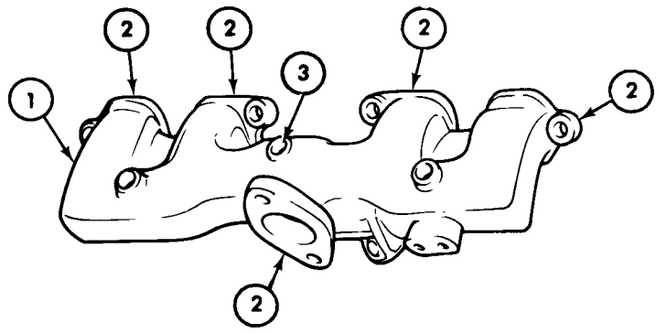

3.		Exhaust manifold (4)	*a.* Inspect for cracks, breaks, warpage, twists, and wear.	Replace if cracked, broken, warped, twisted, or worn.
			b. Inspect for stripped or missing threads (6).	Replace if threads (6) are stripped or missing.
			c. Inspect surface flanges (5) for alinement.	Use straight edge and feeler gage. Replace if variation exceeds .020 in. (.508 mm) over 8 in. (203.2 mm).
			d. Inspect exhaust pipe flange (7) for cracks, breaks, and warpage.	Replace if cracked, broken, or warped.

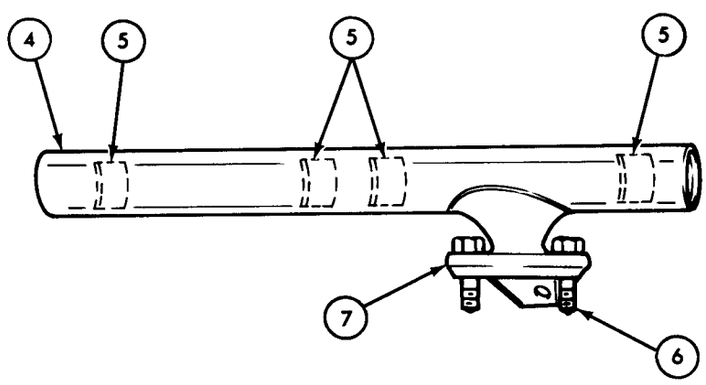

TA 157087

3-36. Intake and Exhaust Manifolds Repair (Cont'd)

STEP NO.	LOCATION	ITEM	ACTION	REMARKS
b. REPAIR				
4.		Intake manifold (1)	Repair as necessary in accordance with instructions in paragraph 3-21.	
		NOTE		
		If leakage from exhaust ports is noted during engine disassembly, refer to TM 9-2320-218-20-1-1 for cleaning and repair.		
5.		Exhaust manifold (2)	Repair as necessary in accordance with instructions in paragraph 3-21.	

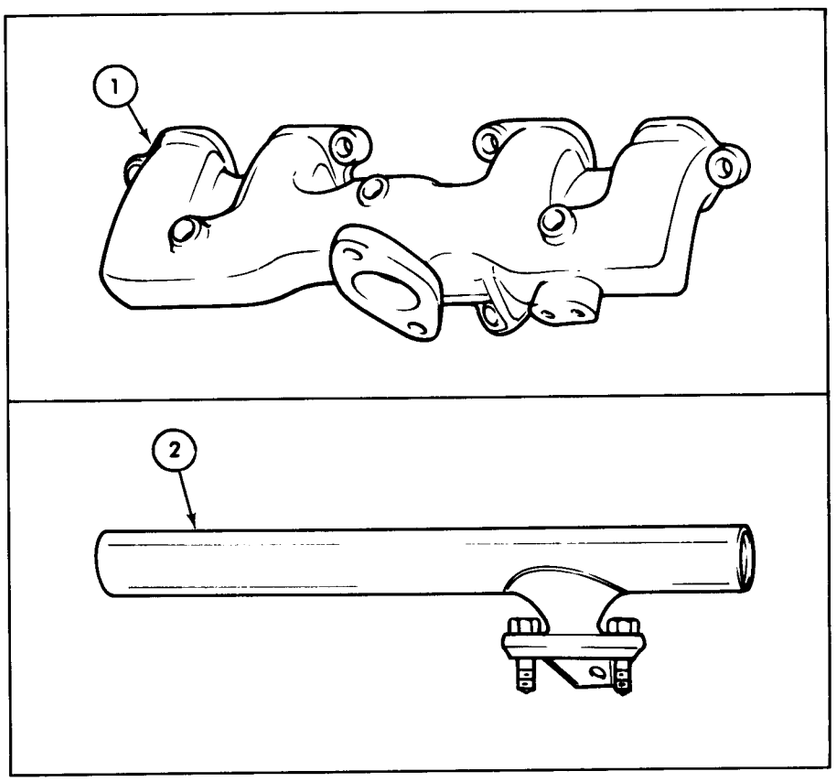

END OF TASK!

FOLLOW-ON TASK: Install intake and exhaust manifolds (para 3-17).

TA 157088

3-36. Intake and Exhaust Manifolds Repair (Cont'd)

STEP NO.	LOCATION	ITEM	ACTION	REMARKS
b. REPAIR				
4.		Intake manifold (1)	Repair as necessary in accordance with instructions in paragraph 3-21.	
		NOTE		
		If leakage from exhaust ports is noted during engine disassembly, refer to TM 9-2320-218-20-1-1 for cleaning and repair.		
5.		Exhaust manifold (2)	Repair as necessary in accordance with instructions in paragraph 3-21.	

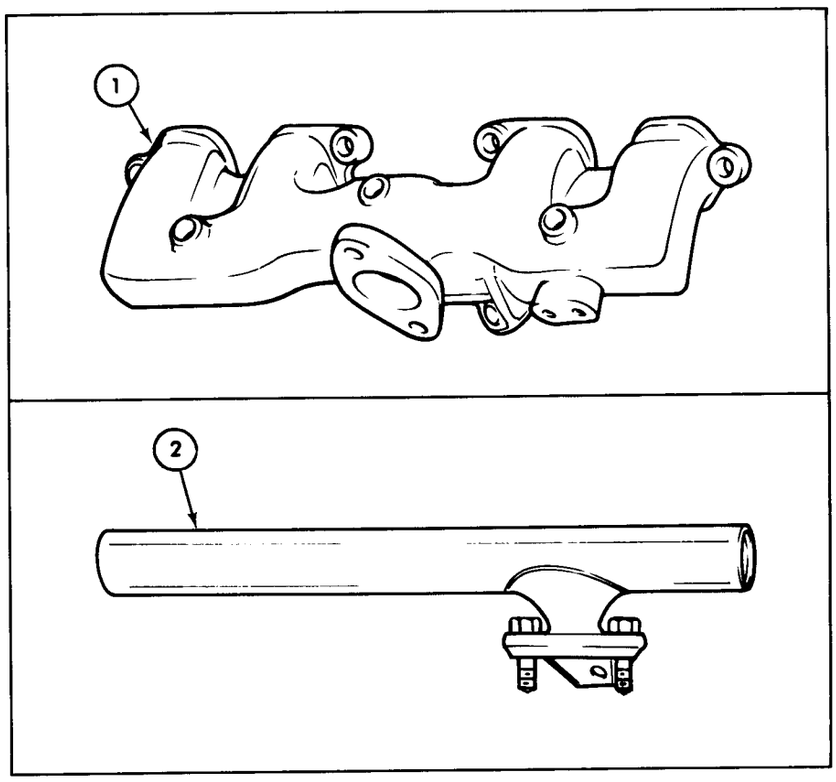

END OF TASK!

FOLLOW-ON TASK: Install intake and exhaust manifolds (para 3-17).

TA 157088

Section VII. ENGINE REPAIR AND REPLACEMENT STANDARDS

3-37. General

This section provides engine assembly repair and replacement standards for the direct and general support levels. The repair and replacement standards included herein give minimum, maximum and key clearance of new or repaired parts. An asterisk (*) in the "wear limit" column indicates that a part should be replaced when worn beyond dimensions given in "size and fit of new parts" column. The letter "L" indicates a loose fit (clearance) the letter "T" indicates a tight fit (interference).

3-38. Repair and Replacement Standards — Engine Assembly

a. Repair and replacement standards for the engine assembly components are listed in tables 3-3 through 3-11. To find the component tolerance requirements, match the reference number identifying the component to the reference number listed to the extreme left in tables 3-3 through 3-11.

b. Provided below is a list identifying the repair and replacement standard tables to the specific engine assembly components:

TABLE NO.	ENGINE ASSEMBLY COMPONENTS	PAGE NO.
3-3.	Cylinder Head Assembly	3-176
3-4.	Rocker Arms and Shaft Assembly	3-181
3-5.	Cylinder Block and Related Parts	3-183
3-6.	Connecting Rod and Piston Assemblies	3-185
3-7.	Camshaft and Related Parts	3-190
3-8.	Crankshaft and Related Parts	3-192
3-9.	Oil Pump and Related Parts	3-195
3-10.	Timing Gear Cover and Related Parts	3-197
3-11.	Fan Blade, Pulley, Water Pump, and Thermostat	3-198

Table 3-3. Repair and Replacement Standards — Cylinder Head Assembly

Ref. No.	Point of Measurement	Size and Fit of New Parts	Wear Limits
1.	Valve spring intake and exhaust: Free length of spring	2.12 in. max (53.8 mm)	*
2.	Squareness of spring with axis in maximum spring assembled height	2°	*
3.	Load in lbs at compressed spring length of 1.821 in. (46.2534 mm)	54-62 lbs (24.5-28.1 kg)	48 lbs (21.7 kg)
4.	Load in lbs at compressed spring length of 1.505 in. (38.227 mm)	124-140 lbs (56.2-63.5 kg)	110 lbs (49.9 kg)
5.	Maximum spring assembled height from surface of cylinder head spring pad to underside of spring retainer	1.821 in. (46.25 mm)	*

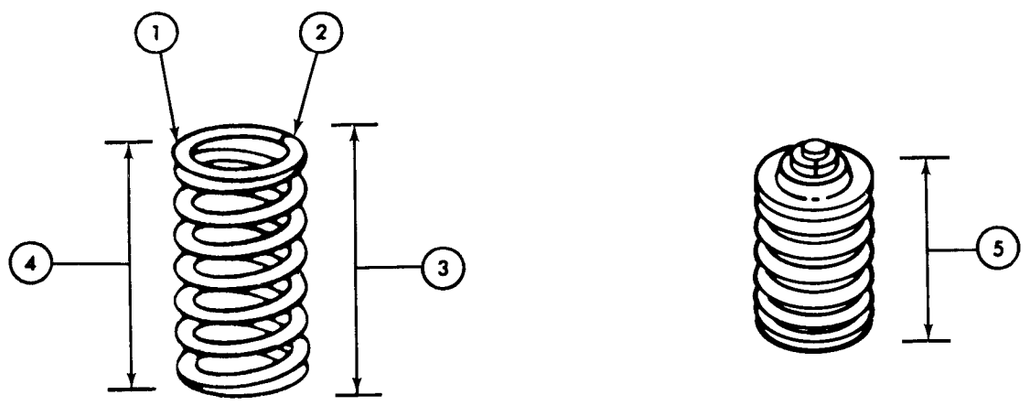

VALVE SPRING — INTAKE AND EXHAUST

TA 157089

Table 3-3. Repair and Replacement Standards — Cylinder Head Assembly (Cont'd)

Ref. No.	Point of Measurement	Size and Fit of New Parts	Wear Limits
	Valve seat, intake and exhaust:		
6.	Width of seat	0.070-0.080 in. (1.7-2.1 mm)	*
7.	Angle of seat	45°-44° 45′	*
8.	Face angle of relief of seat	65° ± 0° 30′	*
9.	Throat angle of relief of seat	15° ± 0° 30′	*
10.	Maximum allowable seat runout	0.0020 in. (.05 mm)	0.0025 in. (.06 mm)
11.	Diameter of intake and exhaust valve guide	0.3115-0.3125 in. (7.91-7.93 mm)	0.3145 in. (7.9 mm)

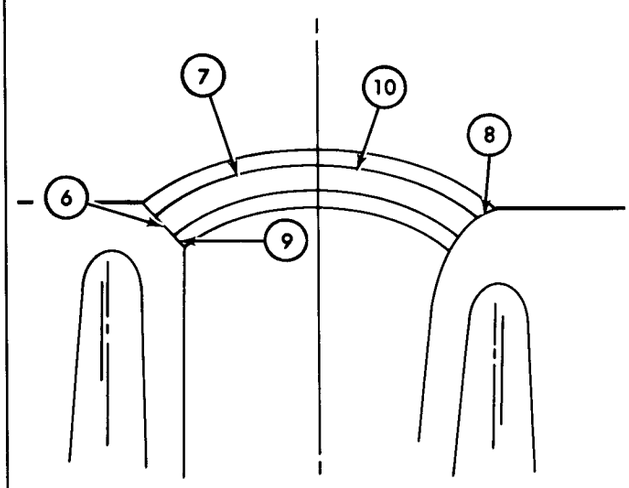

VALVE SEATS — INTAKE AND EXHAUST

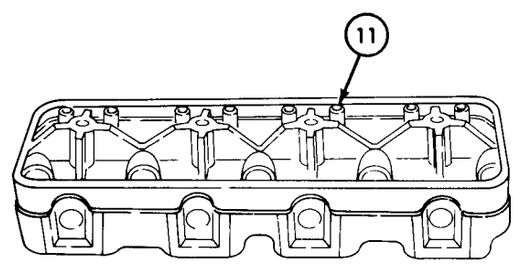

VALVE GUIDE — INTAKE AND EXHAUST

TA 157090

Table 3-3. Repair and Replacement Standards — Cylinder Head Assembly (Cont'd)

Ref. No.	Point of Measurement	Size and Fit of New Parts	Wear Limits
12.	Exhaust valve head, angle of face	45° 15′-45° 30′	*
13.	Runout of valve face	0.0015 in. (.03 mm)	0.0020 in. (.05 mm)
14.	Diameter of valve head	1.327-1.337 in. (33.7-33.9 mm)	*
15.	Minimum thickness of valve head at outer edge of tapered surface		0.0625 in. (1.5 mm)

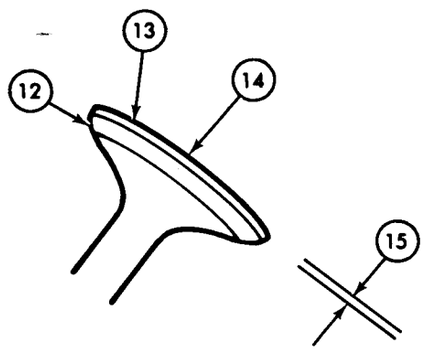

VALVE HEAD — EXHAUST

16.	Exhaust valve stem diameter	0.3090-0.3095 in. (7.84-7.86 mm)	0.3070 in. (7.79 mm)
17.	Clearance of stem to guide	0.00201-0.00351 in. (.05-.08 mm)	.0087 in. L (0.22 mm)
18.	Clearance of valve to rocker arm	0.015±0.001 in. (0.38±.025 mm)	*

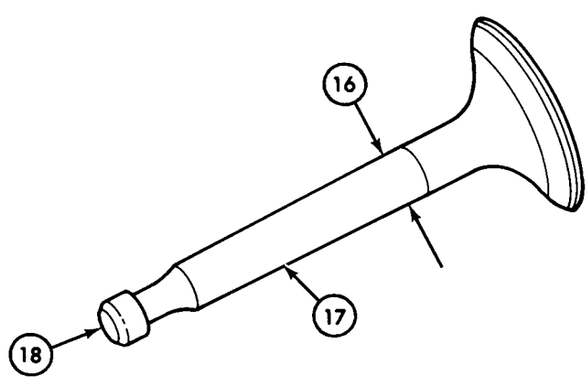

VALVE STEM — EXHAUST

TA 157091

Table 3-3. Repair and Replacement Standards — Cylinder Head Assembly (Cont'd)

Ref. No.	Point of Measurement	Size and Fit of New Parts	Wear Limits
19.	Intake valve head, angle of face	45° 15′-15° 30′	*
20.	Runout of valve face	0.0015 in. (.03 mm)	0.0020 in. (.05 mm)
21.	Diameter of valve head	1.728-1.738 in. (43.8-44.1 mm)	*
22.	Minimum thickness of valve head at outer edge of tapered surface		0.625 in. (15.8 mm)
23.	Intake valve stem diameter	0.3100-0.3105 in. (7.87-7.88 mm)	0.3080 in. (7.8232 mm)
24.	Fit of stem in guide	0.00101-0.00251 in. (.02-.06 mm)	0.00771 in. (0.17 mm)
25.	Clearance of valve to rocker arm	0.015±0.001 in. (0.38±.025 mm)	*

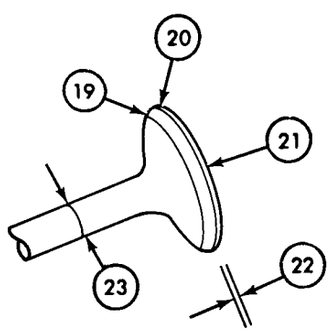

VALVE HEAD — INTAKE

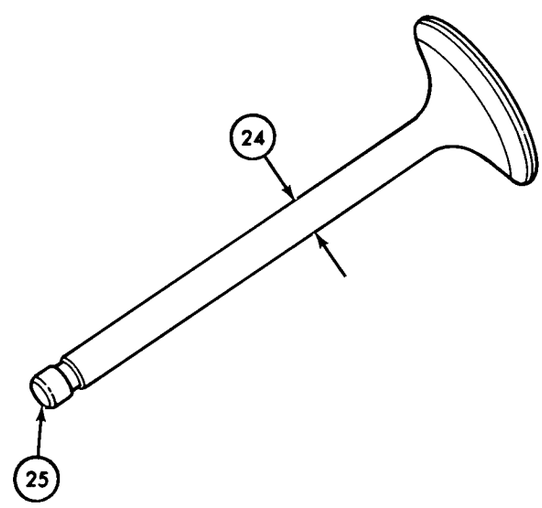

VALVE STEM — INTAKE

TA 157092

Table 3-3. Repair and Replacement Standards — Cylinder Head Assembly (Cont'd)

Ref. No.	Point of Measurement	Size and Fit of New Parts	Wear Limits
26.	Permissible cylinder head out-of-flat overall	0.004 in. (.10 mm)	0.005 in. (.13 mm)
27.	Permissible cylinder head out-of-flat in any 6 in. (152.4 mm)	0.002 in. (.05 mm)	0.004 in. (.10 mm)

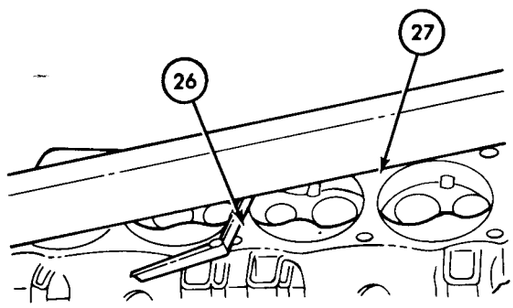

CYLINDER HEAD FLATNESS

TA 157093

Table 3-4. Repair and Replacement Standards — Rocker Arms and Shaft Assembly

Ref. No.	Point of Measurement	Size and Fit of New Parts	Wear Limits
1.	Inside diameter of rocker arm bore	0.7820-0.7836 in. (19.8-19.9 mm)	*
2.	Minimum allowable torque to tighten valve adjusting screw, after screw thread interference		5 lb-ft (6.8 N•m)
3.	Fit of rocker arm on shaft	0.0010-.0036 in. L (0.02-0.07 mm)	0.006 in. L (0.15 mm)
4.	Rocker arm locating spring free length	3.0 in. (76.2 mm)	
5.	Diameter of rocker arm shaft	0.780-0.781 in. (19.81-19.83 mm)	*
6.	Valve push rod runout		.020 in. (0.508 mm)

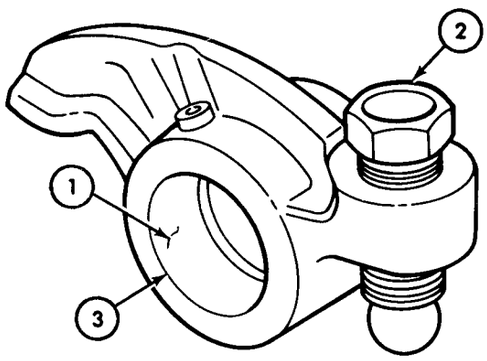

ROCKER ARM

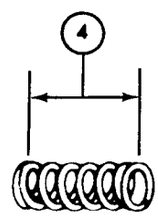

LOCATING SPRING

SHAFT

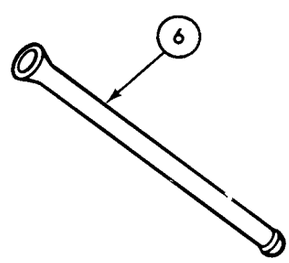

PUSH ROD

TA 157094

CHAPTER 4

FUEL SYSTEM MAINTENANCE

4-1. Overview

a. This chapter provides maintenance of fuel system components authorized for direct support and general support levels. Each component and related information is covered in one of the following sections:

b. Section II is preceded by a list of procedures covered within that section and provides a paragraph and page number leading you to the task.

c. Fuel tank repair requires special safety precautions and is not covered in this manual. Fuel tank repair procedures are covered in FM 43-2 Sheet Metal Repair and Straightening, and TM 9-237 Welding Theory and Application for Fuel Tank Repair.

Section I. DESCRIPTION AND DATA

4-2. General

This section provides description and data for the model 1310B Zenith carburetor. The Zenith model 1310B is a single venturi side draft carburetor.

4-3. Description-Carburetor

The Model 1310B Zenith carburetor is composed of 2 major units, a throttle body and a fuel bowl body. The throttle body contains the float assembly and the throttle and choke plates. The fuel bowl body contains various fuel metering systems including the idle, main metering, power, and accelerating pump systems.

4-3. Description-Carburetor (Cont'd)

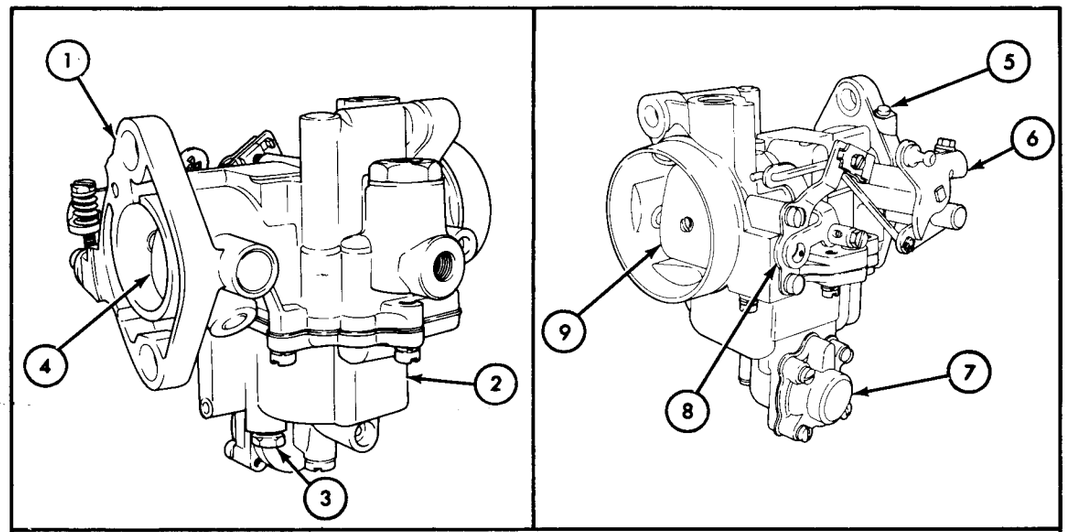

1. Throttle body
2. Fuel bowl body
3. Drain plug
4. Throttle plate
5. Limiter cap
6. Throttle shaft assembly
7. Diaphragm cover
8. Choke shaft assembly
9. Choke plate

4-4. Tabulated Data

The tabulated data for the model 1310B Zenith carburetor is found in table 4-1 below:

Table 4-1. Tabulated Data — Model 1310B Zenith Carburetor

Choke	Manual
Choke Flange	2¼ in. (57 mm)
Float Setting	9/32 in.±1/32 in. from body gasket to the float tip (7.14 mm±0.79 mm)
Manufacturer	Facet
Model Number	Zenith 1310B
Bendix Part Number	13660 (11681709)
Fuel Pressure	4.5 psi (30.5 kPa)
Idle Needle	C46-74
Idle Tube	0.0295 in. (.75 mm)
Main Metering Jet	0.055 in. (1.4 mm)
Power Valve	C97-31-10
Pump Capacity	18-22 cc
Type	Side Draft
Venturi	Single 13/16 in. (21 mm)

TA 156123

Section II. CARBURETOR AND FUEL LINE MAINTENANCE

4-5. General

This section provides maintenance procedures for the Zenith 1310B, 1 barrel, side draft carburetor. To locate a specific procedure, see the maintenance task summary below:

4-6. Carburetor and Fuel Line Maintenance Task Summary

TASK PARA	PROCEDURES	PAGE NO.
4-7.	Carburetor Overhaul a. Disassembly b. Cleaning and Inspection c. Reassembly d. Float Checks and Adjustments	4-3
4-8.	Fuel Line Fabrication a. Flaring b. Bending	4-20

4-7. Carburetor Overhaul

This task covers:

a. Disassembly
b. Cleaning and Inspection
c. Reassembly
d. Float Checks and Adjustments

INITIAL SETUP:

Applicable Models
All

Test Equipment
None

Special Tools
None

Materials/Parts
Carburetor overhaul kit
Carburetor gasket kit
Drycleaning solvent
Safety goggles

Personnel Required
One mechanic

Manual References
TM 9-2320-218-20-1-1
TM 9-2320-218-34P
TM 9-247

Equipment Condition Reference	Condition Description
TM 9-2320-218-20-1	Carburetor removed from vehicle.

Special Environmental Conditions
Clean, well-ventilated work area.

General Safety Instructions
- Do not allow any sparks, open flame, or smoking near cleaning area.
- Keep fire extinguisher nearby when using drycleaning slovent.
- Use safety goggles when working with compressed air.

4-7. Carburetor Overhaul (Cont'd)

STEP NO.	LOCATION	ITEM	ACTION	REMARKS
		WARNING		
		Do not perform this procedure near open flame or sparks. Severe injury will result.		
		NOTE		
		Do not attempt disassembly of carburetor unless overhaul and gasket kits are available.		
	a. DISASSEMBLY			
1.	Fuel bowl body (14) to throttle body (1)	Six screws and lock-washers (15)	Remove.	
		CAUTION		
		• Carefully pull fuel bowl body (14) directly away from throttle body (1) during disassembly, to avoid damaging float (13) and/or moving and bending main well tube (8). • Avoid spilling fuel present in bowl by not tipping fuel bowl body (14).		
		NOTE		
		Main well tube (8) will remain in throttle body (1) when fuel bowl body (14) is removed.		
2.		Fuel bowl body (14)	Separate from throttle body (1).	Discard any fuel or foreign material into a suitable container.
		NOTE		
		The float axle (16) is knurled on one end and smooth on the other. Remove knurled end first.		
3.	Float (13) to throttle body (1)	Float axle (16)	Pull out and remove.	If frozen, drive out using a small punch on smooth axle end.
4.		Float (13)	Remove from throttle body (1).	
5.	Fuel valve seat (10)	Fuel valve assembly (11)	Remove.	Discard fuel valve assembly (11).

4-7. Carburetor Overhaul (Cont'd)

STEP NO.	LOCATION	ITEM	ACTION	REMARKS
6.	Lower throttle body (7)	Body gasket (12)	Remove.	Discard body gasket (12).
7.	Lower throttle body (7)	Fuel valve seat (10) and washer (9)	Remove.	Discard fuel valve seat (10) and washer (9).
8.	Throttle body (1)	Filter head (3) and washer (2)	Remove.	Discard washer (2).
9.	Throttle body mounting flange (6)	Seal plug (5)	Remove.	Discard seal plug (5).
10.	Throttle body mounting flange (6)	Idle adjusting needle (4)	Unscrew and remove.	Discard idle adjusting needle (4).

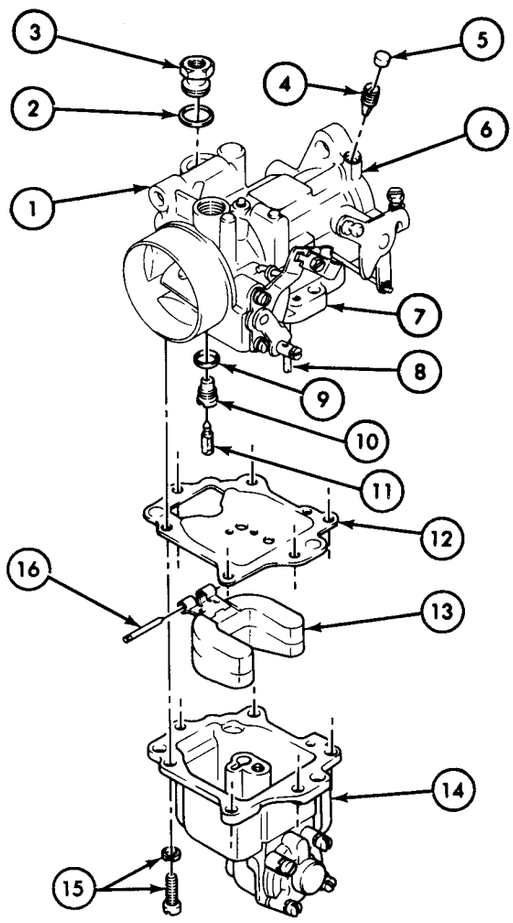

TA 156124

4-7. Carburetor Overhaul (Cont'd)

STEP NO.	LOCATION	ITEM	ACTION	REMARKS
11.	Choke plate (2) to choke shaft and lever assembly (1)	Two screws and lockwashers (3)	Remove as follows: *a.* Close choke plate (2) and loosen screws (3) until resistance is felt. *b.* Tighten screws (3) one turn and open choke plate (2). *c.* Using a small file, shorten ends of screws (3) until flush with choke shaft (1). *d.* Close choke plate (2) and remove screws and lockwashers (3).	
12.		Choke plate (2)	Remove from choke shaft and lever assembly (1).	
13.	Advance rod (4)	Cotter pin (6)	Remove.	Discard cotter pin (6).
14.	Throttle and choke shaft and lever assemblies (5) and (1)	Advance rod (4)	Remove.	

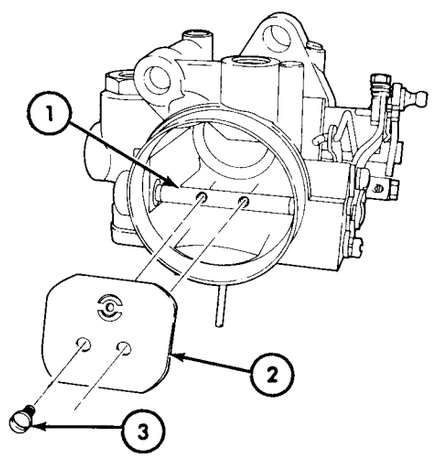

TA 156125

4-7. Carburetor Overhaul (Cont'd)

STEP NO.	LOCATION	ITEM	ACTION	REMARKS

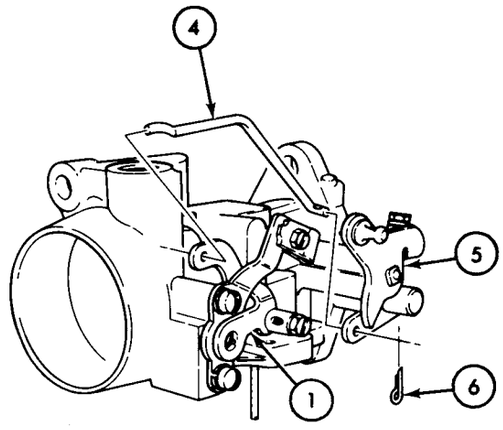

15.		Choke shaft and lever assembly (1)	Remove from throttle body air intake (7).	
16.	Choke cable attaching bracket (8) to throttle body air intake (7)	Two screws and lockwashers (9)	Remove.	
17.		Choke cable attaching bracket (8)	Remove from throttle body air intake (7).	
18.	Throttle body air intake (7)	Choke shaft seal retainer (10), seal (11) and washer (12)	Remove.	Discard seal (11) and retainer (10).

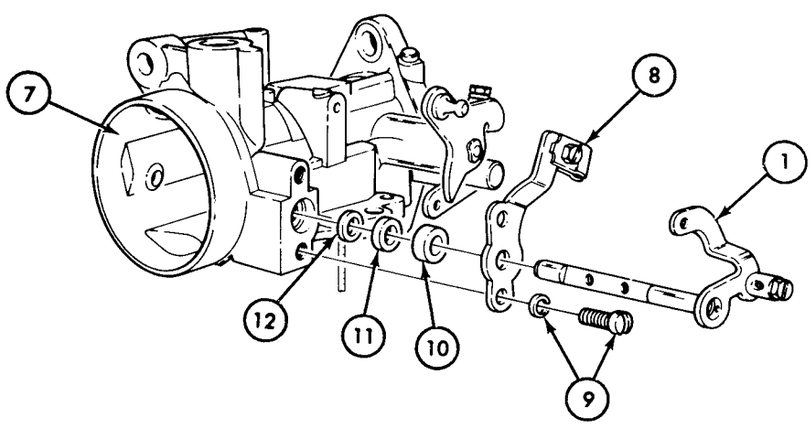

TA 156126

4-7. Carburetor Overhaul (Cont'd)

STEP NO.	LOCATION	ITEM	ACTION	REMARKS
19.	Throttle plate (2) to throttle shaft and lever assembly (1)	Two screws and lockwashers (3)	Remove as follows: *a.* Close throttle plate (2) and loosen screws (3) until resistance is felt. *b.* Tighten screws (3) one turn and open throttle plate (2). *c.* Using a small file, shorten ends of screws (3) until flush with throttle shaft (1). *d.* Close throttle plate (2) and remove screws and lockwashers (3).	
20.		Throttle plate (2) and throttle shaft and lever assembly (1)	Remove from throttle body mounting flange (4).	

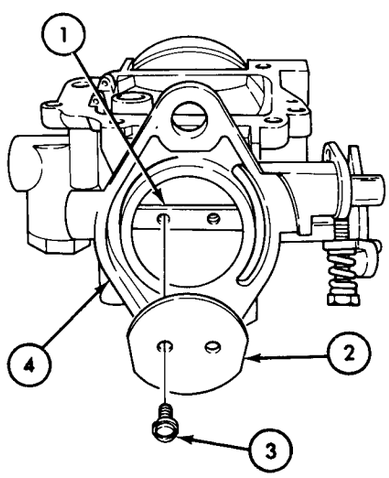

TA 156127

4-7. Carburetor Overhaul (Cont'd)

STEP NO.	LOCATION	ITEM	ACTION	REMARKS
21.	Throttle body mounting flange (4)	Throttle shaft retainer (6) and seal (5)	Remove.	Discard throttle shaft retainer (6) and seal (5).

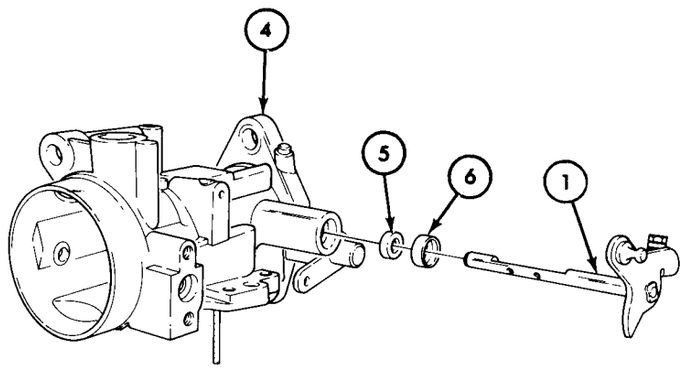

22.	Floor of fuel bowl body (13)	Main jet (11) and washer (12)	Remove.	Discard jet (11) and washer (12).

CAUTION

Do not allow extractor to extend through lower portion of check valve. Damage to carburetor will result if extractor contacts fuel bowl body.

23.	Floor of fuel bowl body (13)	Check valve (8)	Using screw extractor, pull directly out.	Discard check valve (8).
24.	Fuel bowl center column (7)	Idle tube (9) and washer (10)	Remove.	Discard idle tube (9) and washer (10).

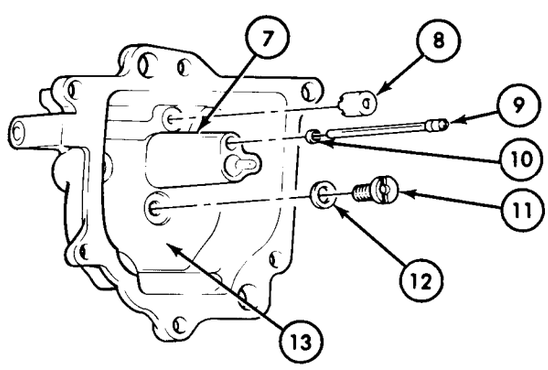

TA 156128

4-7. Carburetor Overhaul (Cont'd)

STEP NO.	LOCATION	ITEM	ACTION	REMARKS
25.	Lower fuel bowl body (9)	Accelerating jet (7) and washer (6)	Remove.	Discard jet (7) and washer (6).
26.	Lower fuel bowl body (9)	Fuel bowl drain plug (8)	Remove.	
27.	Diaphragm cover (2)	Four screws and lock-washers (1)	Remove.	
28.		Diaphragm cover (2), spring (3), and diaphragm (4)	Remove from lower fuel bowl body (9).	Discard spring (3) and diaphragm (4).
29.	Lower fuel bowl body (9)	Power valve assembly (5)	Unscrew and remove.	Discard power valve assembly (5).

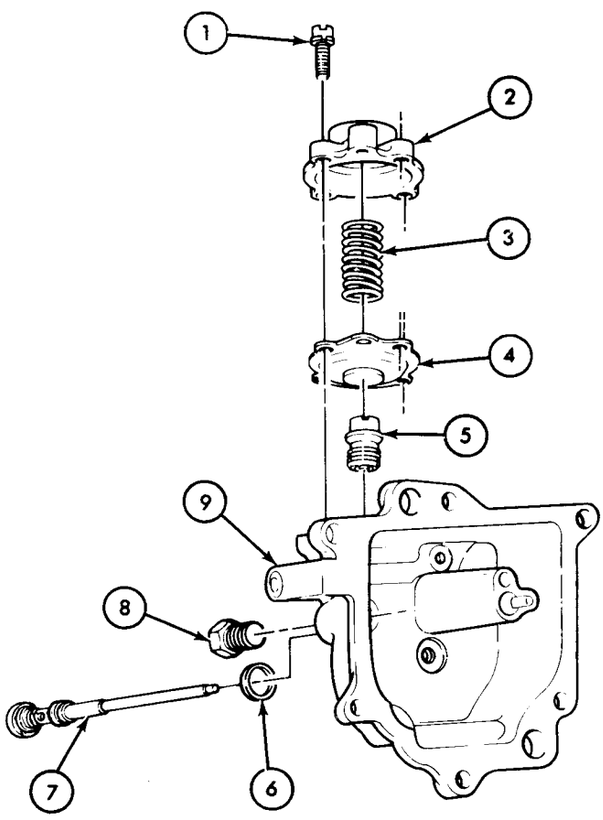

TA 156129

4-7. Carburetor Overhaul (Cont'd)

STEP NO.	LOCATION	ITEM	ACTION	REMARKS
	b. CLEANING AND INSPECTION			
		WARNING		
		Drycleaning solvent is flammable and will not be used near an open flame. A fire extinguisher will be kept nearby when solvent is used. Use only in well-ventilated places. Failure to do this may result in injury to personnel and/or damage to equipment.		
		CAUTION		
		• To avoid damage to carburetor, do not use wire or drill bits to clean carburetor metering passages.		
		• Do not clean throttle body in cleaning solvent if shaft and lever assembly seals are not removed from body.		
30.	All metal carburetor components	*a.* Clean with drycleaning solvent.	See TM 9-247.	
		b. Rinse in warm water.		
		WARNING		
		Compressed air source will not exceed 30 psi. When cleaning with compressed air, eyeshields must be worn. Failure to wear eyeshields may result in injury to the eyes and loss of sight.		
		c. Blow dry with compressed air.	Blow out all air and fuel passages.	
		d. Clean gasket surfaces of all old gasket material.		
31.	Carburetor components	Inspect for nicks, burrs, cracks, breaks, bends, dents, wear, and stripped threads.	Remove small burrs with file. Replace carburetor if nicked, cracked, broken, bent, dented, worn, or threads stripped.	

4-7. Carburetor Overhaul (Cont'd)

STEP NO.	LOCATION	ITEM	ACTION	REMARKS
32.		Main well tube (1)	*a.* Measure distance between tube end (2) and throttle body (4).	Distance should be 1.680 ± .005 in. (42.67 ± .127 mm).
			b. Discharge opening (5) must face throttle body opening (3).	If distance is not correct, replace carburetor.

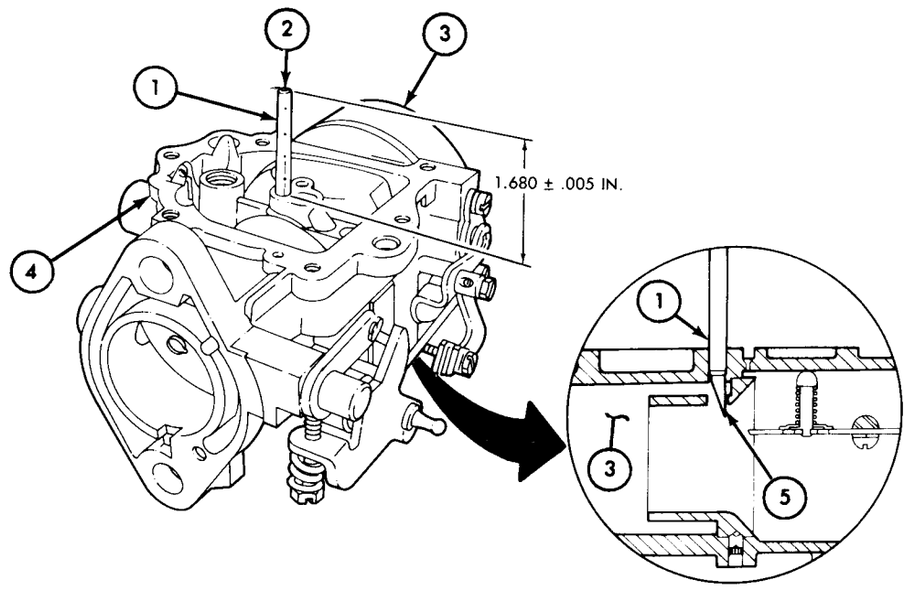

c. REASSEMBLY

33.		New power valve assembly (10)	Install in lower fuel bowl body (18).
34.		New diaphragm (9), new spring (8), and diaphragm cover (7)	*a.* Position to lower fuel bowl body (18) and aline holes.
			b. Secure with four screws and lockwashers (6).
35.		Fuel bowl drain plug (21)	Install in lower fuel bowl body (18).
36.		New accelerating jet (20) and new washer (19)	Install in lower fuel bowl body (18).

TA 156130

4-7. Carburetor Overhaul (Cont'd)

STEP NO.	LOCATION	ITEM	ACTION	REMARKS
37.		New check valve (12)	Using hammer and brass drift, install by tapping into floor of fuel bowl body (17) until top is flush with floor.	Do not allow brass drift to contact center hole of check valve (12).
38.		New washer (16) and new main jet (15)	Install in floor of fuel bowl body (17).	
39.		New washer (13) and new idle tube (14)	Install in fuel bowl center column (11).	

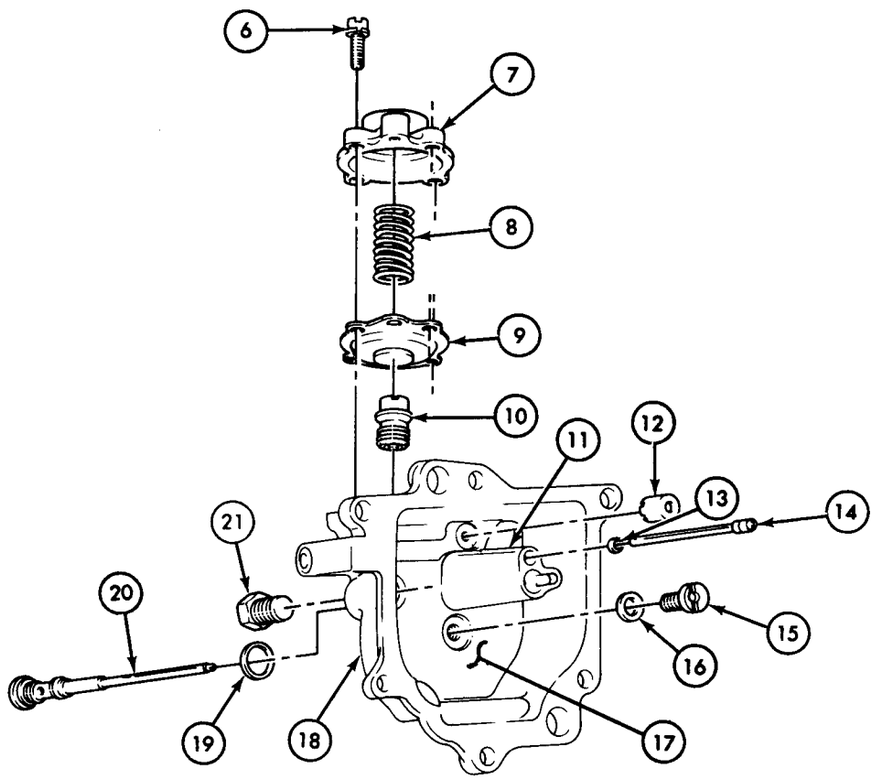

TA 156131

4-7. Carburetor Overhaul (Cont'd)

STEP NO.	LOCATION	ITEM	ACTION	REMARKS
40.		New throttle shaft seal (2) and new retainer (3)	Press into throttle body mounting flange (1).	Use care when pressing in retainer (3) to avoid damage.
41.		Throttle shaft and lever assembly (4)	Insert into throttle body mounting flange (1).	

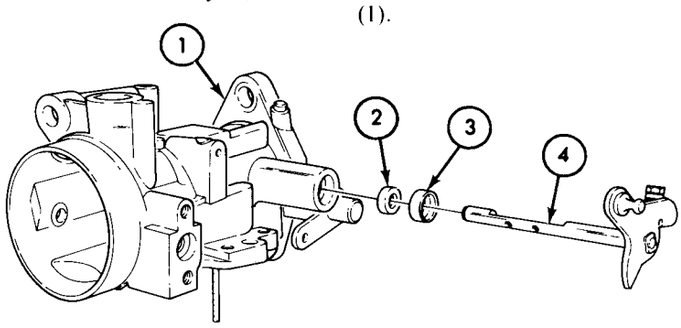

42.		Throttle plate (5)	Secure to throttle shaft and lever assembly (4) with two screws and lockwashers (6).	Make sure throttle plate (5) does not bind when installed.

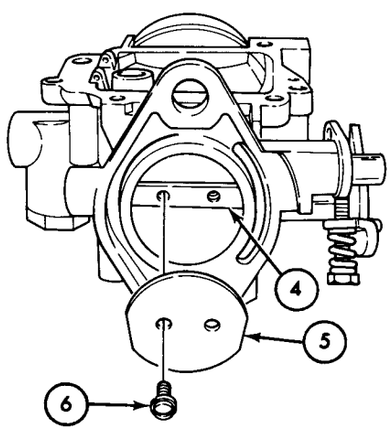

43.		Choke shaft washer (13), new retainer (11), and new seal (12)	Press into side of throttle body air intake (7).	Use care when pressing in retainer (11) to avoid damage.
44.		Choke cable attaching bracket (8)	Secure to side of throttle body air intake (7) with two screws and lockwashers (10).	

TA 156132

4-7. Carburetor Overhaul (Cont'd)

STEP NO.	LOCATION	ITEM	ACTION	REMARKS
45.		Choke shaft and lever assembly (9)	Insert into side of throttle body air intake (7).	

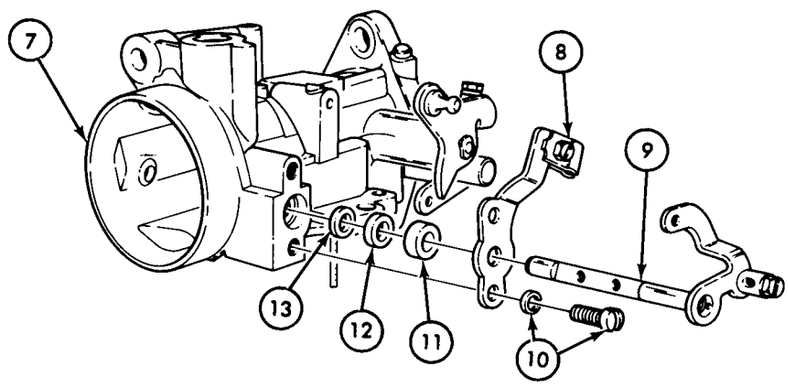

46.		Choke plate (14)	Secure to choke shaft and lever assembly (9) with two screws and lockwashers (15).	Make sure choke plate (14) does not bind when installed.
47.		Advance rod (16)	*a.* Insert formed end into choke shaft and lever assembly (9).	
			b. Insert opposite end into throttle shaft and lever assembly (4) and secure with new cotter pin (17).	Make sure choke and throttle shaft and lever assemblies (9) and (4) have free movement.

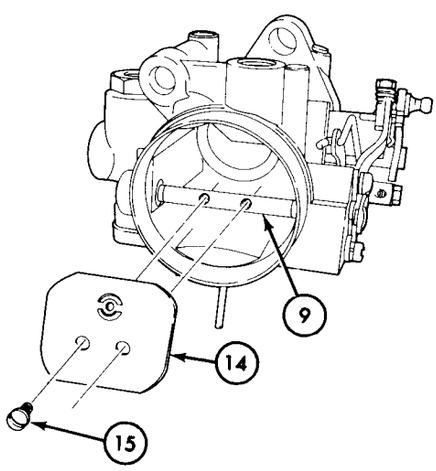

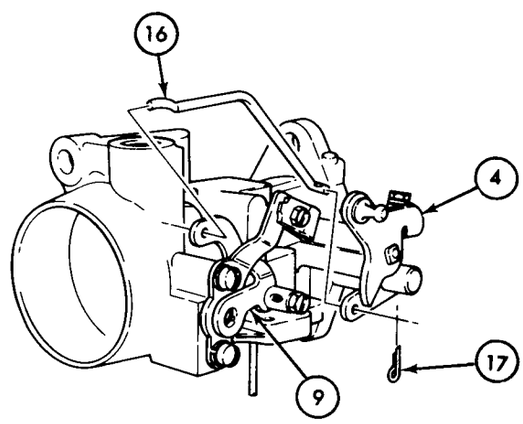

TA 156133

4-7. Carburetor Overhaul (Cont'd)

STEP NO.	LOCATION	ITEM	ACTION	REMARKS
48.		Filter head (1) and new washer (2)	Install in throttle body (6).	
49.		New idle adjusting needle (4)	Install in throttle body mounting flange (3).	Turn needle (4) in until it seats, then back out one turn.
50.		New seal plug (5)	Insert in throttle body mounting flange (3).	

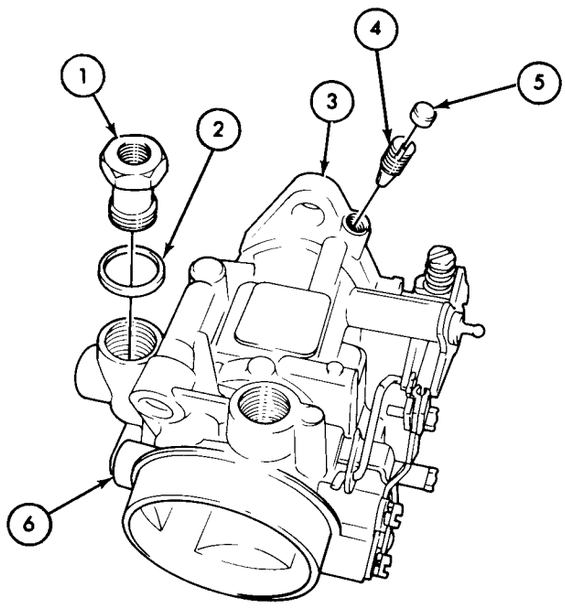

51.		New fuel valve washer (9) and seat (8)	Install in lower throttle body (10).	
52.		New fuel valve assembly (7)	Install into fuel valve seat (8).	Make sure fuel valve (7) is free and does not stick in seat (8).
53.		New body gasket (11)	Install on lower throttle body (10).	
54.		Float (13)	Position between throttle body float hinge mounts (14) and secure with float axle (12).	Perform float (13) checks and adjustments (see task *d*).

TA 156134

4-7. Carburetor Overhaul (Cont'd)

STEP NO.	LOCATION	ITEM	ACTION	REMARKS
55.		Fuel bowl body (16)	*a.* Position to underside of throttle body (6) and aline six holes.	

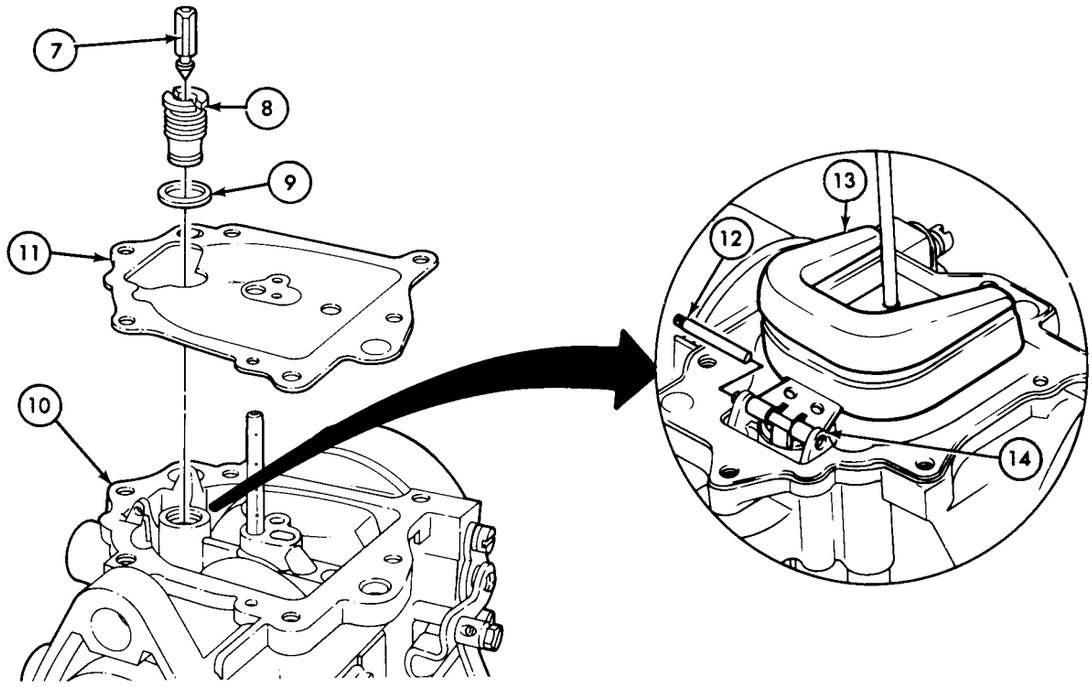

CAUTION

When positioning fuel bowl body (16), make sure main well tube (15) slides directly over accelerating jet (17) and seats properly in fuel bowl body center column (18).

b. Secure with six screws and lockwashers (19).

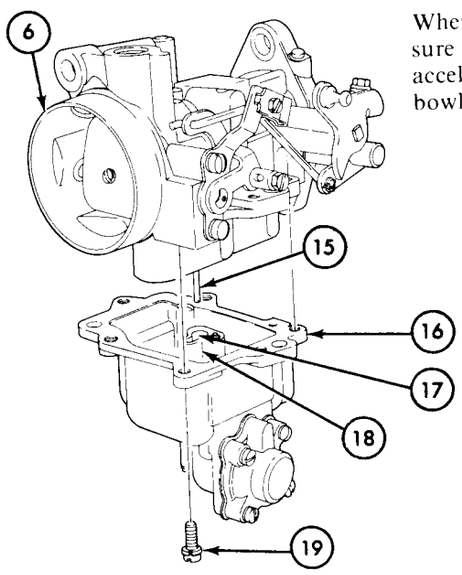

TA 156135

4-7. Carburetor Overhaul (Cont'd)

STEP NO.	LOCATION	ITEM	ACTION	REMARKS
d. FLOAT CHECKS AND ADJUSTMENTS				
56.		Float (2)	Check and adjust float level as follows:	
			a. Invert throttle body (4) so float (2) is uppermost.	
			b. Using a short ruler or scale (3), measure the distance between gasket (5) and two tips of float (2).	Make sure end of scale is placed on part of gasket (5) backed by metal to avoid false reading. Correct distance is 9/32 ± 1/32 in. (7.14 ± 0.79 mm).
			c. If distance is not 9/32 ± 1/32 in. (7.14 ± 0.79 mm), adjust float level by bending float arm (1) directly behind buoyant portion of float (2) until correct distance is obtained.	Use needle-nosed pliers.

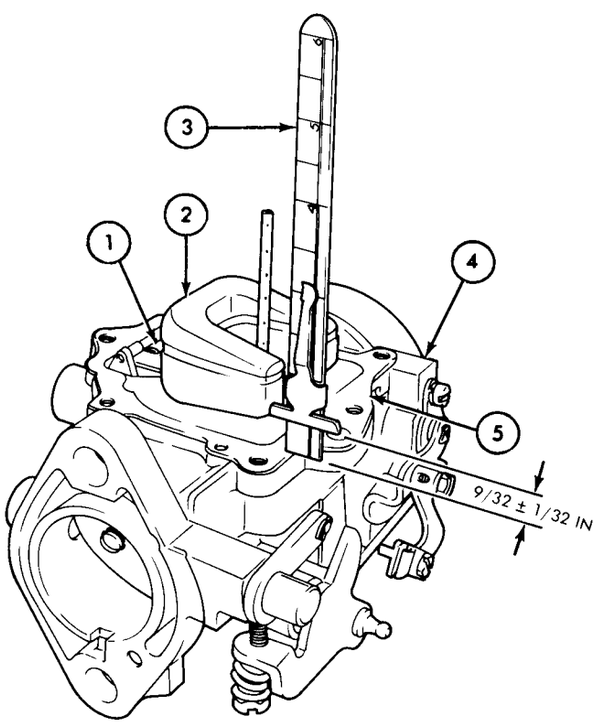

TA 156136

4-7. Carburetor Overhaul (Cont'd)

STEP NO.	LOCATION	ITEM	ACTION	REMARKS
57.		Float (2)	Check and adjust float drop as follows:	
			a. Hold throttle body (4) in normal installed position so float (2) is facing down.	
			b. Using a short ruler or scale, measure the distance between gasket (5) and two tips of float (2).	Make sure end of scale is placed on part of gasket (5) backed by metal to avoid false reading. Correct distance is 3/8 in. (9.53 mm) minimum.
			c. If distance is not 3/8 in. (9.53 mm) minimum, adjust float drop by bending float tab (6) until correct distance is obtained.	

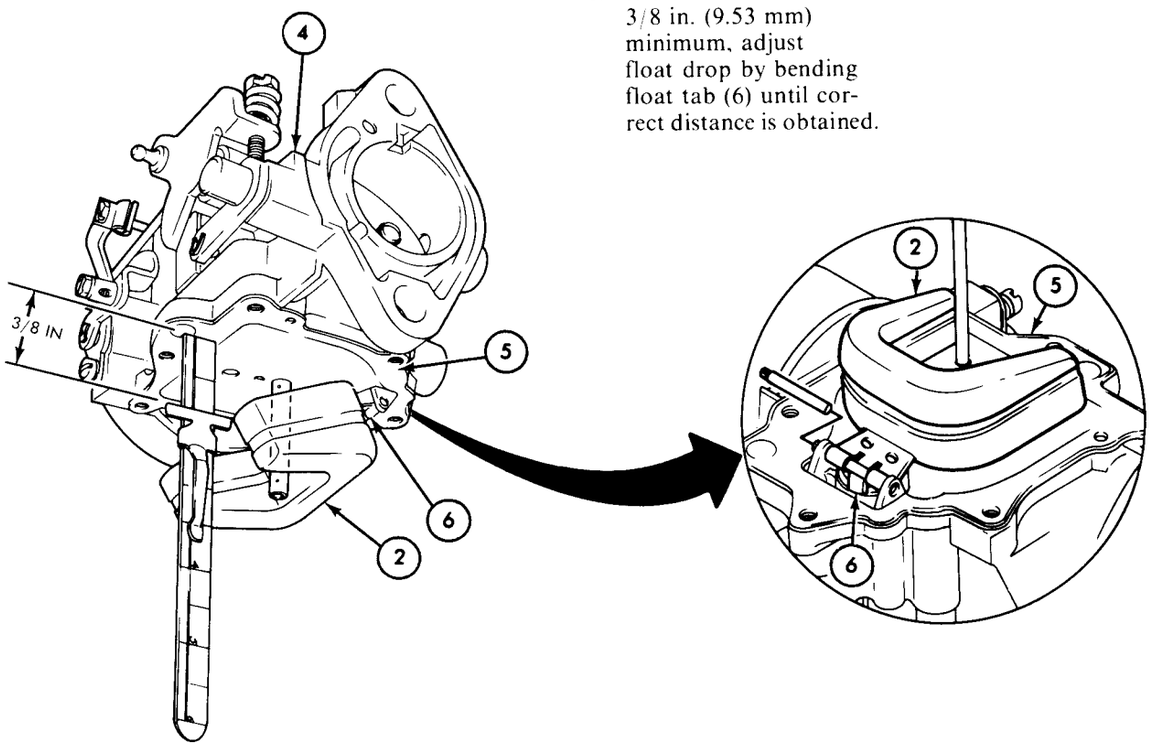

END OF TASK!

FOLLOW-ON TASKS:
- Install carburetor on vehicle (TM 9-2320-218-20-1).
- Adjust fuel mixture (TM 9-2320-218-20-1).

TA 156137

4-8. Fuel Line Fabrication

This task covers:

a. Flaring *b. Bending*

INITIAL SETUP:

Applicable Models	Equipment Condition Reference	Condition Description
All		None

Test Equipment

None

Special Tools

Flaring tool
Tube bender

Special Environmental Conditions

None

Materials/Parts

Tube section
PLS oil

Personnel Required

One mechanic

General Safety Instructions

None

Manual References

TM 9-2320-218-34P

STEP NO.	LOCATION	ITEM	ACTION	REMARKS
a. FLARING				
1.		Tube section (3)	*a.* Cut tube end (2) even and clean.	Use tube cutter (1), and do not overtighten while turning.
			b. Remove burrs from fresh cut.	Use burr remover (4) on tube cutter (1).
2.		Flare nut (5)	Place on tube section (3).	
3.		Tube section (3)	Position so cut end (2) is above top of hinged die (10), a distance equal to thickness of adapter (6).	

4-8. Fuel Line Fabrication (Cont'd)

STEP NO.	LOCATION	ITEM	ACTION	REMARKS
4.		Adapter (6)	*a.* Place a dab of PL-S oil on end of tube (2) and on recess around peg (7). *b.* Insert peg (7) into tube section (3).	
5.		Flaring tool screw actuator (8)	*a.* Place over top of adaptor (6) and turn down until adapter (6) meets hinged die (10). *b.* Unscrew and remove adapter (6). *c.* Turn down again to create desired flare.	
6.	Flaring tool (9)	Tube section (3)	Remove.	

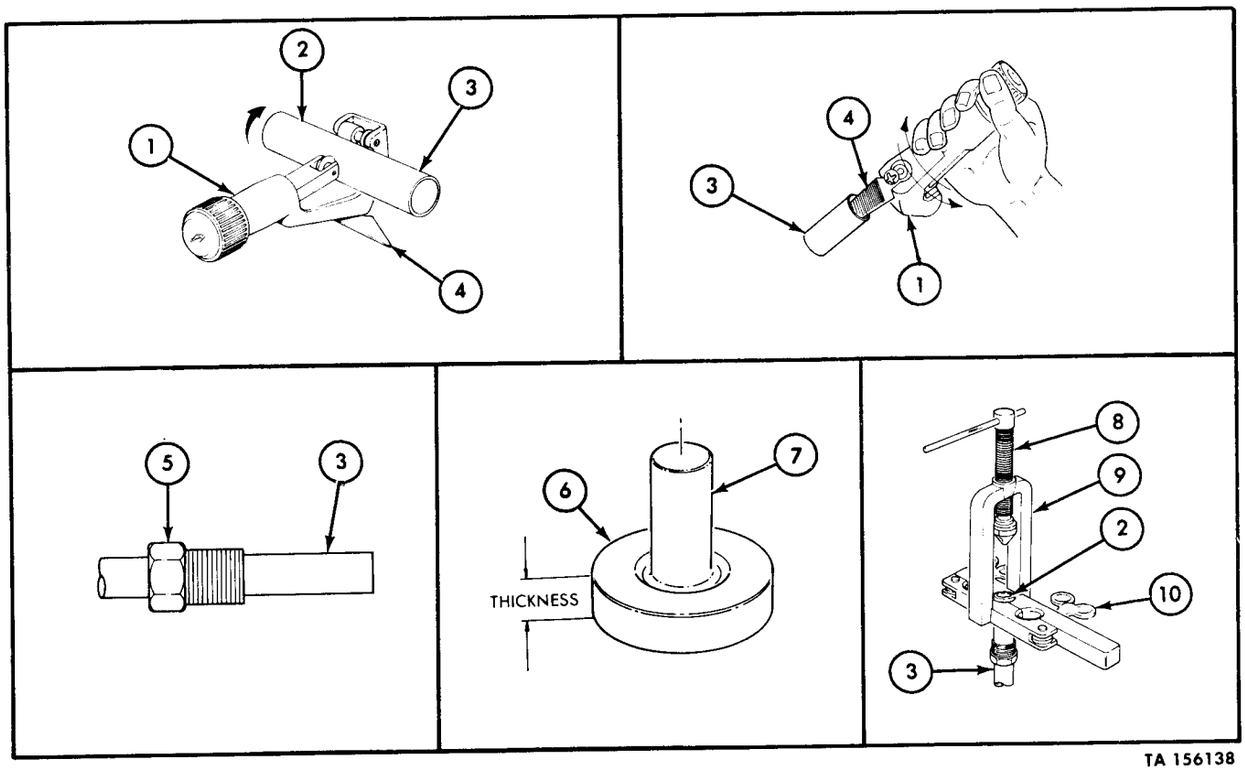

TA 156138

4-8. Fuel Line Fabrication (Cont'd)

STEP NO.	LOCATION	ITEM	ACTION	REMARKS
b. BENDING				
		CAUTION Never bend tubing at any one point more than 45°. Tubing could crack.		
7.		Tube bender (2) and tubing (1)	*a.* Position area where tubing (1) is to be bent at center of tube bender (2). *b.* With both hands at tube bender (2) center, carefully slide hands apart while bending tubing (1). *c.* Repeat step 7*b* until bend is completed.	

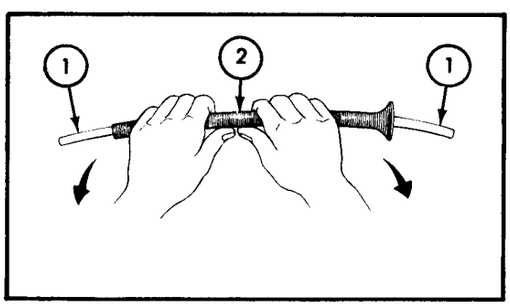

END OF TASK!

TA 156139

Section III. REPAIR AND REPLACEMENT STANDARDS

4-9. General

This section provides direct and general support repair and replacement standards for the 1310 Zenith carburetor. The repair and replacement standards give minimum, maximum, and key clearance of new or repaired parts. An asterisk (*) in the "wear limit" column indicates that a part should be replaced when worn beyond measurements given in "size and fit of new parts" column. In "size and fit of new parts" column, the letter "L" indicates a loose fit (clearance), the letter "T" indicates a tight fit (interference).

4-10. Repair and Replacement Standards - Carburetor

The components covered by the repair and replacement standards listed in table 4-2 are illustrated below. To find the component and its tolerance requirement, match the reference number in the column located to the extreme left in table 4-2.

Table 4-2. Repair and Replacement Standards — Zenith 1310B Carburetor

Ref. No.	Point of Measurement	Size and Fit of New Parts	Wear Limits
	THROTTLE BODY ASSEMBLY:		
1.	Diameter of throttle shaft bore in body	0.314-0.316 in. (7.97-8.02 mm)	0.317 in. (8.05 mm)
2.	Diameter of choke shaft bore in body	0.003-0.0045 in. L (0.07-0.10 mm)	0.006 in. (0.05 mm)
3.	Diameter of throttle shaft	0.3110-0.3115 in. (7.89-7.91 mm)	0.310 in. (7.87 mm)

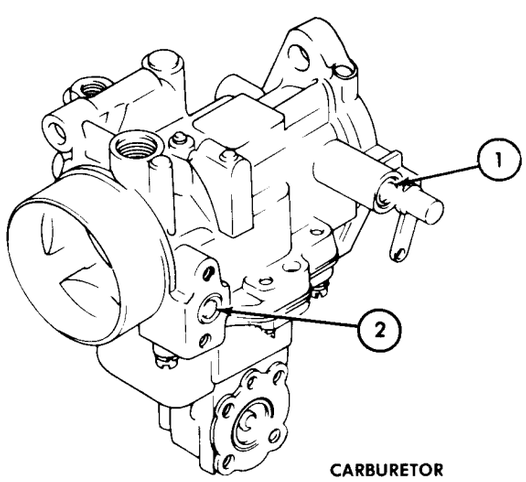

CARBURETOR

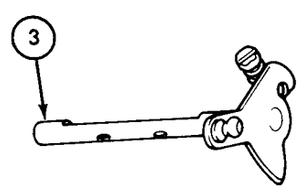

THROTTLE SHAFT

TA 156140

4-10. Repair and Replacement Standards-Carburetor (Cont'd)

Table 4-2. Repair and Replacement Standards — Zenith 1310B Carburetor (Cont'd)

Ref. No.	Point of Measurement	Size and Fit of New Parts	Wear Limits
4.	Diameter of choke shaft	0.2485-0.2490 in. (6.32 mm)	0.248 in. (6.3 mm)
5.	Diaphram spring	1.310 in. (33.27 mm)	*

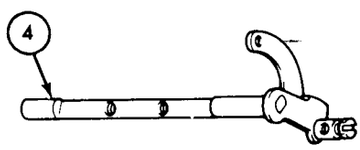

CHOKE SHAFT

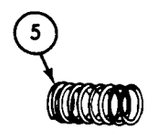

DIAPHRAM SPRING

TA 156141

CHAPTER 5
DISTRIBUTOR MAINTENANCE

5-1. Overview

a. This chapter provides maintenance instructions for solid-state and standard ignition distributors. This information is found in one of the following sections:

b. Sections II and III are preceded by a list that provides a breakdown of procedures covered within that section and provides a paragraph and page number leading you to each task.

Section I. DESCRIPTION AND DATA

5-2. General

This section provides distributor description and data for the direct support and general support levels of maintenance.

5-3. Description-Distributor

a. Two types of distributors are provided for the 1/4-ton vehicle: a solid-state and a breaker point (standard ignition) variety.

b. The solid-state distributor can be one of two makes: the Prestolite unit or the Swiss Control unit. The identifying difference between the two is that the Swiss Control unit has a full-bodied rotor whereas the Prestolite unit has a conventional rotor.

c. The breaker point distributor, also provided by Prestolite, can be identified by the presence of a conventional rotor and points.

d. Adjustment of the Swiss Control solid-state unit is not required. Adjustments for the Prestolite solid-state and breaker point distributors are required and can be found in table 5-1.

5-4. Tabulated Data

Tabulated data for 1/4-ton solid-state and breaker point distributors is provided in table 5-1.

Table 5-1. Tabulated Data for Breaker Point and Solid-State Distributors

IGNITION SYSTEM	STANDARD	METRIC
1. Standard Ignition:		
Distributor Make	Prestolite	
Rotation rotor end	Clockwise	
Type of advance	Centrifugal	
Breaker point opening	0.017-0.022 in.	.43-.55 mm
Cam angle	39°	
Voltage	24-volt	
Timing	6° BTDC	
Spark plug gap	0.032-0.036 in.	.81-.91 mm
Engine firing order	1-3-4-2	
Ignition coil location	Distributor housing	
2. Solid-State Ignition:		
Distributor make	Prestolite	
Rotation distributor end	Clockwise	
Type of advance	Centrifugal	
Voltage	24-volt	
Timing	6° BTDC	
Rotor	Heavy duty	
Control module	Breakerless inductive, discharge (B.I.D.-adjustable)	
Trigger wheel to magnetic pickup clearance (air gap)	0.010 in.	0.25 mm
Spark plug gap	0.032-0.036 in.	.81-.91 mm
Firing order	1-3-4-2	
Ignition coil location	Distributor housing	
3. Solid-State Ignition:		
Distributor make	Swiss control	
Rotation distributor end	Clockwise	
Type of advance	Centrifugal	
Voltage	24-volts	
Timing	6° BTDC	
Rotor	Magnetic	
Control module	Breakerless inductive discharge (B.I.D.-adjustable)	
Spark plug gap	0.032-0.036 in.	.81-.91 mm
Firing order	1-3-4-2	
Ignition coil location	Distributor housing	

Section II. DISTRIBUTOR MAINTENANCE

5-5. General

This section provides maintenance procedures assigned to direct and general support levels for the distributor. To find a specific task, see the distributor maintenance task summary below:

5-6. Distributor Maintenance Task Summary

5-7. Ignition Coil Capacitor Maintenance

This task covers:

a. Removal
b. Inspection
c. Testing
d. Installation

INITIAL SETUP:

Applicable Models
All

Equipment Condition

Reference	Condition Description
TM 9-2320-218-20-1-1	Ignition coil removed.

Test Equipment
Multimeter

Special Tools
None

Special Environmental Conditions
Work area clean and away from blowing dirt and dust.

Materials/Parts
Receptacle grommet
Coil capacitor "O" ring

Personnel Required
One mechanic

General Safety Instructions
None

Manual References
TM 9-2320-218-20-1-1
TM 9-2320-218-34P

STEP NO.	LOCATION	ITEM	ACTION	REMARKS
		NOTE		
		The ignition coil capacitor (3) can be replaced with the distributor (4) on or off the vehicle.		
	a. REMOVAL			
1.	Distributor receptacle (2) to distributor housing (4)	Four screw-assembled internal tooth lock-washers (1)	Remove and pull receptacle (2) and ingition coil capacitor (3) from housing (4).	
2.		Receptacle grommet (6) and coil capacitor "O" ring (5)	Remove from receptacle (2) and coil capacitor (3).	Discard grommet (6) and "O" ring (5).
	b. INSPECTION			
3.		Coil capacitor (3)	Inspect for loose or frayed terminal, and broken solder.	Replace capacitor (3) if lead is loose or frayed, or solder is broken.

5-7. Ignition Coil Capacitor Maintenance (Cont'd)

STEP NO.	LOCATION	ITEM	ACTION	REMARKS
c. TESTING				
		NOTE		
		When there are no apparent defects, the capacitor will be tested for resistance with a multimeter (7).		
4.		Ignition coil capacitor (3)	Test for resistance as follows:	
			a. "Zero" and set multimeter (7) to RX1 range.	
			b. Touch probes to either end of capacitor (3).	If multimeter (7) indicator reads any resistance, replace capacitor (3).
d. INSTALLATION				
5.		New receptacle grommet (6) and new coil capacitor "O" ring (5)	Install on receptacle (2) and coil capacitor (3).	
6.		Coil capacitor (3)	Position to distributor receptacle (2) and secure to housing (4) with four screw-assembled internal tooth lockwashers (1).	

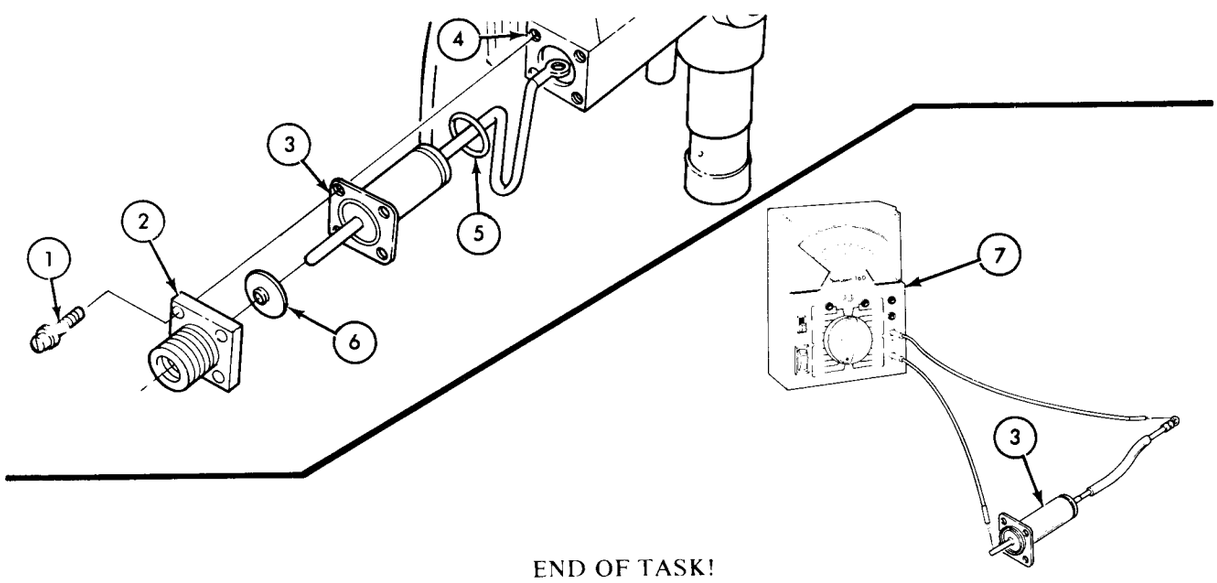

END OF TASK!

FOLLOW-ON TASK: Install ignition coil (TM 9-2320-218-20-1-1).

TA 156212

5-8. Distributor Overhaul

This task covers:

a. Disassembly
b. Cleaning and Inspection
c. Reassembly

INITIAL SETUP:

Applicable Models
All

Equipment Condition

Reference	Condition Description
TM 9-2320-218-20-1-1	Distributor removed.
TM 9-2320-218-20-1-1	Standard ignition removed or solid-state ignition removed.
TM 9-2320-218-20-1-1	Coil removed.
Para 5-7	Ignition coil capacitor removed.

Test Equipment
Dial indicator
Inside and outside micrometers

Special Tools
V-blocks support
Safety goggles

Materials/Parts
Drycleaning solvent
Methyl ethyl keytone (NSN 6810-00-281-2785)
Crocus cloth
PL-S oil
GAA grease

Personnel Required
One mechanic

Manual References
TM 9-2320-218-20-1-1
TM 9-2320-218-34P

Special Environmental Conditions
Work area clean, away from blowing dirt and dust, and well ventilated.

General Safety Instructions
- Keep fire extinguisher nearby when using drycleaning solvent.
- Wear eye protection when working with compressed air.

STEP NO.	LOCATION	ITEM	ACTION	REMARKS

NOTE

Instructions covered in this procedure will deal only with those components of the distributor not authorized for the organizational level. See TM 9-2320-218-20-1-1 for distributor components not covered.

a. DISASSEMBLY

NOTE

Steps 1 and 2 apply to standard ignition and Swiss Controls solid-state ignition distributors only.

5-8. Distributor Overhaul (Cont'd)

STEP NO.	LOCATION	ITEM	ACTION	REMARKS
1.	Distributor cam (3)	Felt wick (2) and snapring (1)	Remove.	
2.	Distributor shaft (4)	Cam (3)	Remove.	
3.		Distributor base (5)	Lay flat on workbench so distributor shaft coupling (7) rests in V-block (8).	
4.	Distributor shaft (4) to coupling (7)	Roll pin (6)	Remove with drift and hammer, and pull coupling (7) and lower thrust washer (9) from shaft (4).	If coupling (7) binds on shaft (4), tap lightly with rubber mallet.
5.	Distributor base (5)	Distributor shaft and weight assembly (4) and upper distributor thrust washer (12)	Remove.	
6.	Distributor shaft (4)	Two governor springs (13) and weights (10)	Remove.	Identify weak spring lug (11) for reassembly.

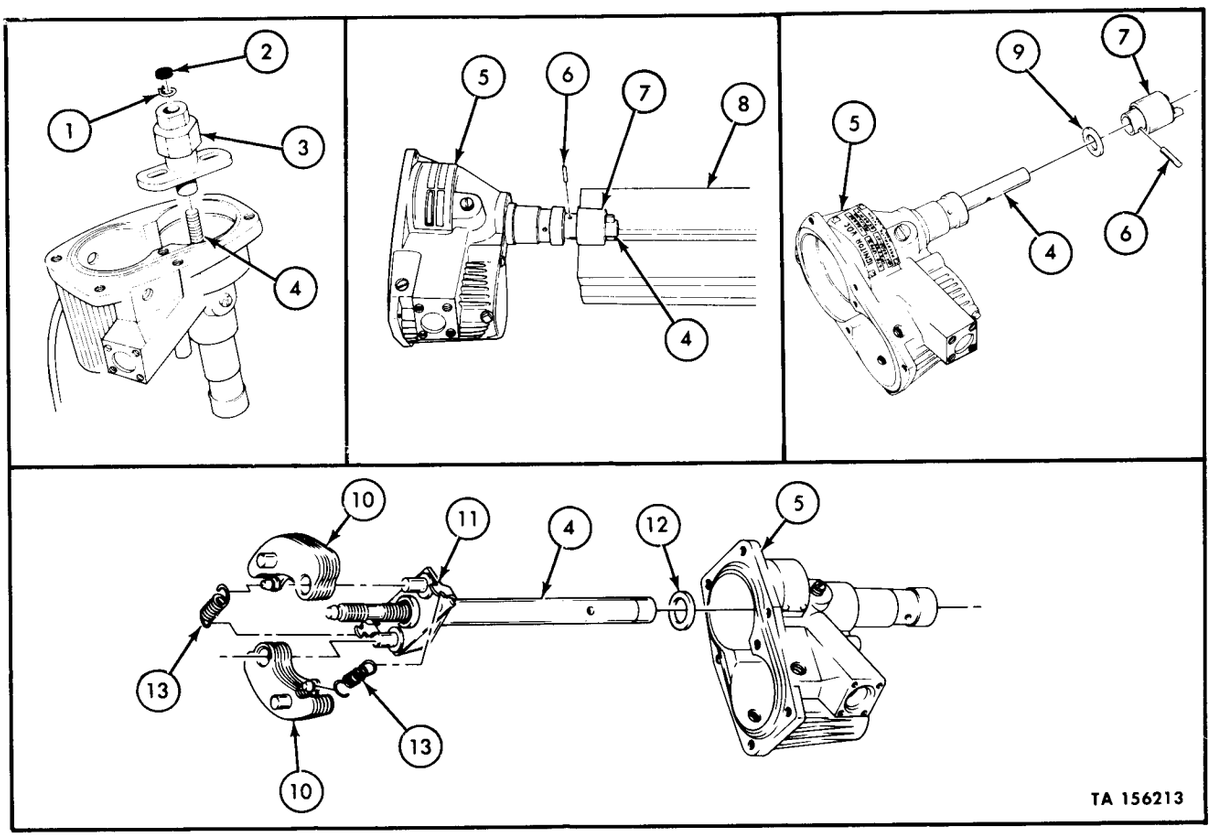

5-8. Distributor Overhaul (Cont'd)

STEP NO.	LOCATION	ITEM	ACTION	REMARKS

b. CLEANING AND INSPECTION

WARNING

- Drycleaning solvent is flammable and will not be used near an open flame. A fire extinguisher will be kept nearby when the solvent is used. Use only in well-ventilated places. Failure to do this may result in injury to personnel and or damage to equipment.
- Compressed air source will not exceed 30 psi. When cleaning with compressed air, eyeshields must be worn. Failure to wear eyeshields may result in injury to the eyes and loss of sight.

NOTE

All components of distributor assembly, including those removed by TM 9-2320-218-20-1-1, will be cleaned and inspected as outlined in this task.

7.	Distributor cover (1)	*a.* Clean in drycleaning solvent.		
		b. Dry with compressed air.		
		c. Inspect for cracks and place on distributor base (2) to make sure it seats properly.	Replace cover (1) if cracked or does not seat on base (2).	

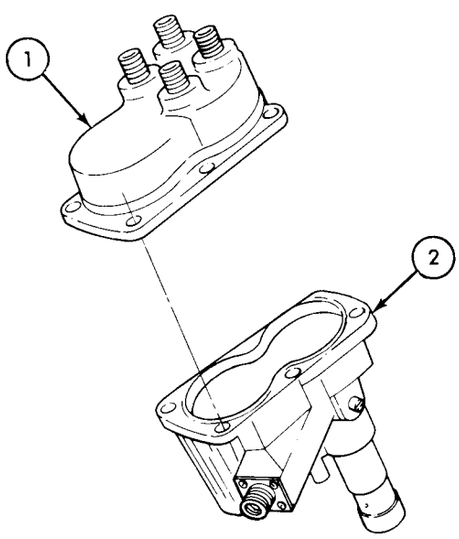

TA 156214

5-8. Distributor Overhaul (Cont'd)

STEP NO.	LOCATION	ITEM	ACTION	REMARKS
8.		Distributor cap (3)	*a.* Inspect for cracks and carbon runners on inside or outside surfaces.	
			b. Inspect inserts (5) for excessive burning and uneven wear.	If inserts (5) are excessively burned (slightly burned inserts (5) are acceptable), replace cap (3).
				If there are burned spots on horizontal face of inserts (5), rotor (6) is too short and must be replaced.
			c. Clean with drycleaning solvent.	Do not clean contact (4) with drycleaning solvent.
			d. Dry with compressed air.	
			e. Clean contact (4) and inserts (5) with methyl ethyl keytone.	Do not file contact (4).
			f. Inspect contact (4) and inserts (5) for cracks.	Replace cap (3) if contact (4) or inserts (5) are cracked.

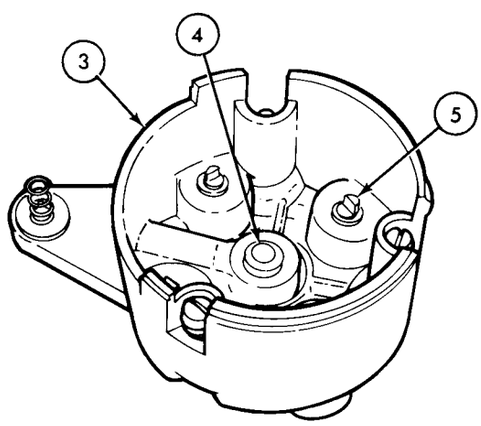

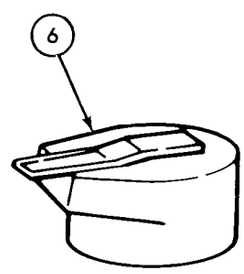

TA 156215

5-8. Distributor Overhaul (Cont'd)

STEP NO.	LOCATION	ITEM	ACTION	REMARKS
9.		Rotor (1)	Inspect for cracks and loose or burned contact strip (2).	If contact strip (2) is only slightly burned, clean with methyl ethyl keytone. Replace rotor (1) if cracked, or contact strip (2) is loose or burned.
10.		Ignition coil (3)	*a.* Clean in drycleaning solvent.	
			b. Inspect for dents, cracks, and loose or badly corroded terminals.	Replace coil (3) if dented, cracked, or terminals are loose or excessively corroded.
			c. Test coil (3).	See TM 9-2320-218-20-1-1.

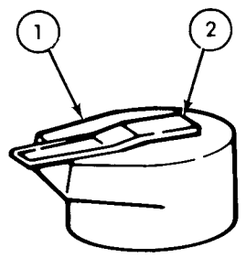

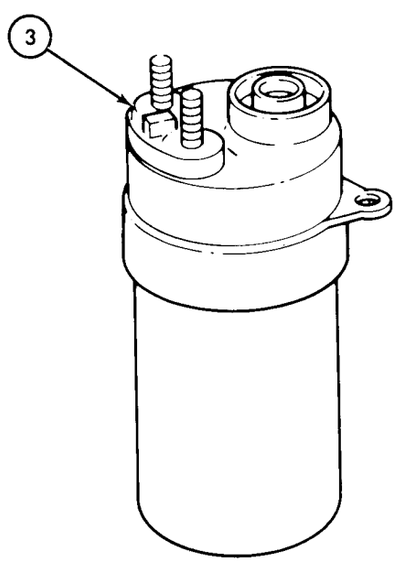

TA 156216

5-8. Distributor Overhaul (Cont'd)

STEP NO.	LOCATION	ITEM	ACTION	REMARKS
		NOTE		
		Steps 11, 12, and 13 apply to standard ignition distributors only.		
11.		Breaker plate (4)	*a.* Clean with drycleaning solvent.	
			b. Dry with compressed air.	
			c. Use multimeter to check primary terminal (6) for grounding.	Replace breaker plate (4) if grounded.
			d. Inspect for stripped threads and worn or loose lever pivot (5).	Repair stripped threads using die. If stripped threads cannot be repaired or lever pivot (5) is worn or loose, replace breaker plate (4).
12.		Points (8)	*a.* Clean with dry cloth.	
			b. Inspect contacts (7) for pitted and burned surface areas.	Replace points (8) if contacts (7) are pitted or burned.

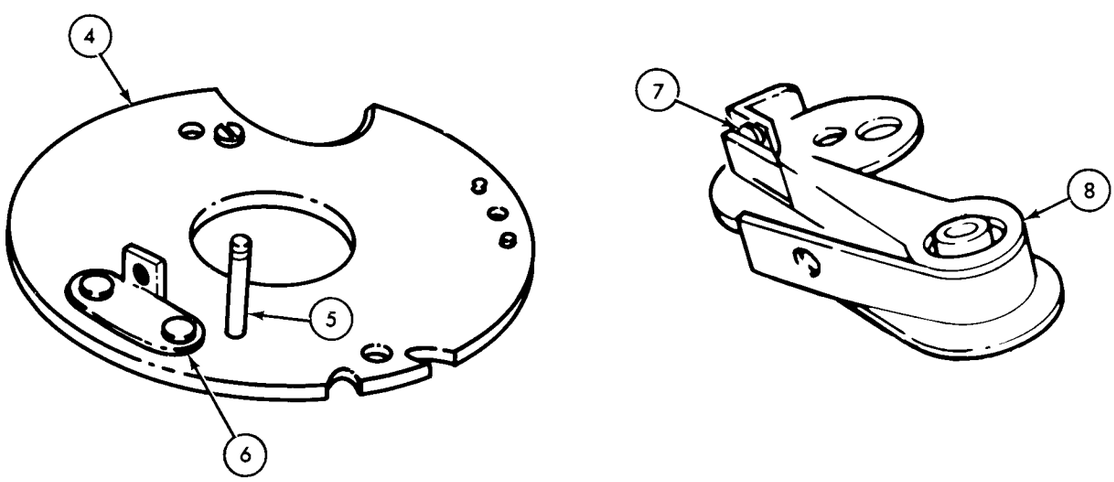

TA 156217

5-8. Distributor Overhaul (Cont'd)

STEP NO.	LOCATION	ITEM	ACTION	REMARKS
13.		Condenser (2)	*a.* Clean with dry cloth.	
			b. Check condenser lead (1) for chafing, breaks, and damage.	Replace condenser (2) if lead (1) is chafed, broken, or damaged.
		NOTE		
		Step 14 applies to standard ignition and Swiss Controls solid-state ignition distributors only.		
14.		Distributor cam (3)	*a.* Clean with drycleaning solvent.	
			b. Dry with compressed air.	
			c. Inspect lobes (4) and weight slots (5) for corrosion, damage, and wear.	Replace cam (3) if corrosion cannot be removed, or if damaged or worn.
		NOTE		
		Step 15 applies to Prestolite and Swiss Controls solid-state ignition distributors only.		

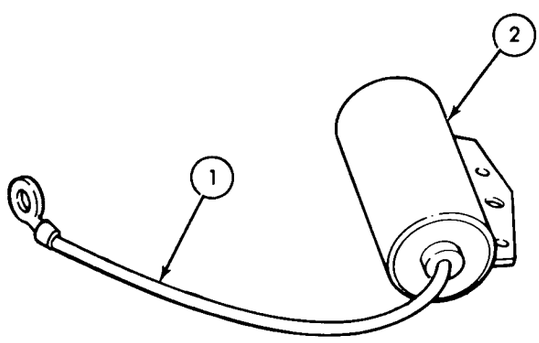

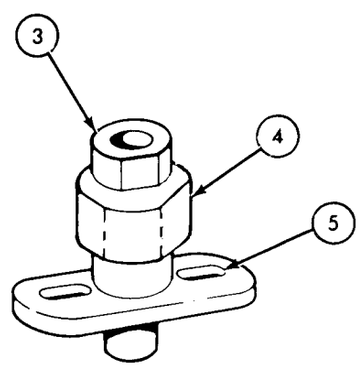

TA 156218

5-8. Distributor Overhaul (Cont'd)

STEP NO.	LOCATION	ITEM	ACTION	REMARKS
15.		Control module (6)	Inspect for cracks, and loose or corroded terminal wires.	Replace module (6) if cracked, or terminal wires are loose or corroded.

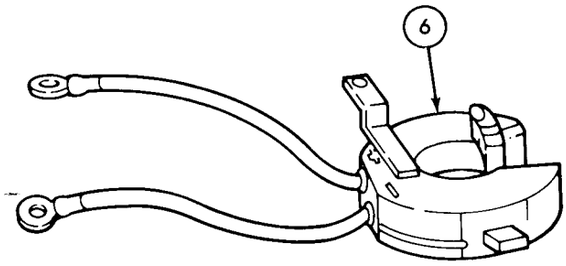

NOTE

Step 16 applies to Prestolite solid-state ignition distributor only.

16.		Trigger wheel (7)	*a.* Clean in drycleaning solvent.	
			b. Dry with compressed air.	
			c. Inspect contacts (8) for grooves and wear.	Replace trigger wheel (7) if contacts (8) are grooved or worn.
			d. Inspect weight slots (9) for roughness and wear.	Replace trigger wheel (7) if sides of weight slots (9) are rough or worn.
17.		Two governor weights (10) and springs (11)	*a.* Clean in drycleaning solvent.	
			b. Dry with compressed air.	
			c. Inspect weights (10) for worn shaft pivot holes (13).	Replace weights (10) if fit is loose.
			d. Inspect weight pivots (12) for wear.	Replace weights (10) if pivots (12) are worn.
			e. Inspect springs (11) for bent and distorted coils.	Replace springs (11) if coils are bent or distorted.

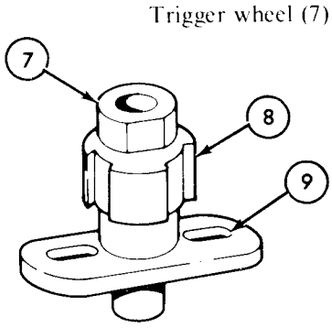

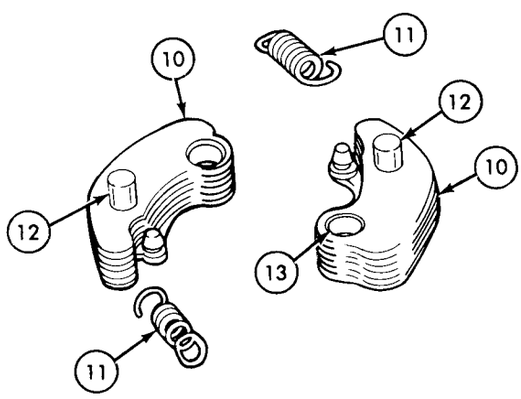

TA 156219

5-8. Distributor Overhaul (Cont'd)

STEP NO.	LOCATION	ITEM	ACTION	REMARKS
18.		Distributor base (1) and shaft (6)	*a.* Wipe shaft (6) and inside of base (1) with cloth dampened in drycleaning solvent.	Do not soak.
			b. Dry with compressed air.	
			c. Inspect base (1) for cracks and stripped threads. Make sure "O" ring groove is smooth and clean.	Repair stripped threads with tap or die. If cracked, "O" ring groove damaged, or stripped threads cannot be repaired, replace distributor.
			d. Remove plug (2) and inspect felt wick (3) for lubrication.	Lubricate wick (3) with PL-S oil and install plug (2).
			e. Place shaft (6) on two V-blocks (7).	
			f. Mount dial indicator (5) and place tip (9) on shaft bearing surface (8).	
			g. "Zero" dial indicator (5).	
			h. Rotate shaft (6) and record runout on dial indicator (5).	If runout exceeds 0.0015 in. (0.04 mm), replace distributor.
			i. Measure shaft (6) diameter using outside micrometer.	If worn to less than 0.497 in. (12.5 mm), replace distributor.
19.		Bushing bore (4)	Measure inner diameter with inside micrometer.	If worn to more than 0.500 in. (12.7 mm), replace distributor.

5-8. Distributor Overhaul (Cont'd)

STEP NO.	LOCATION	ITEM	ACTION	REMARKS

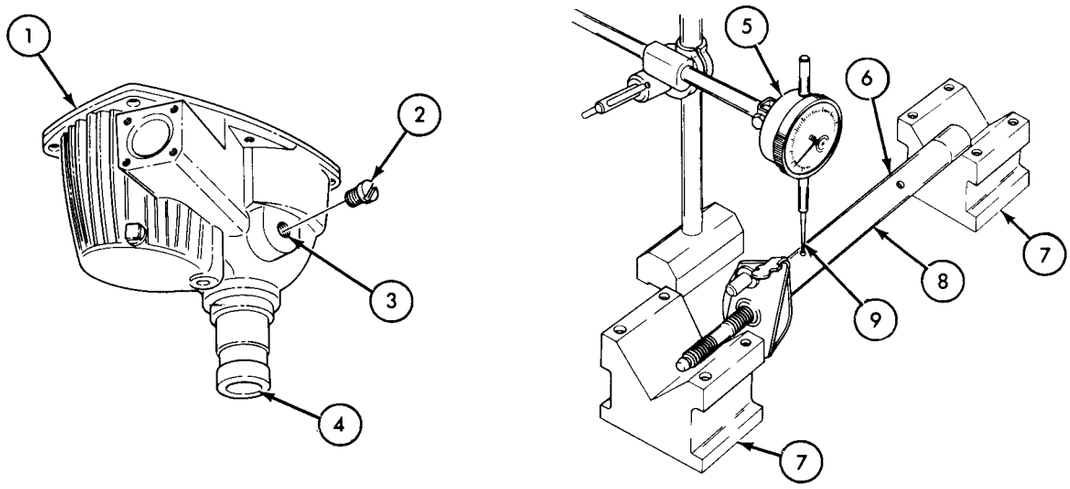

c. *REASSEMBLY*

NOTE

Before assembling distributor shaft and weight assembly, place a small amount of GAA grease on weight pivots (10), weight holes (12), weight spring posts (14), and shaft pivots (15).

20.	Two governor weights (11)	Position on shaft pivots (15).	
21.	Weak spring (18) and taut spring (13)	Secure each to weight posts (14) and shaft lugs (17) and (16).	Make sure weak spring (18) is secured to weak spring lug (16) marked in step 6.

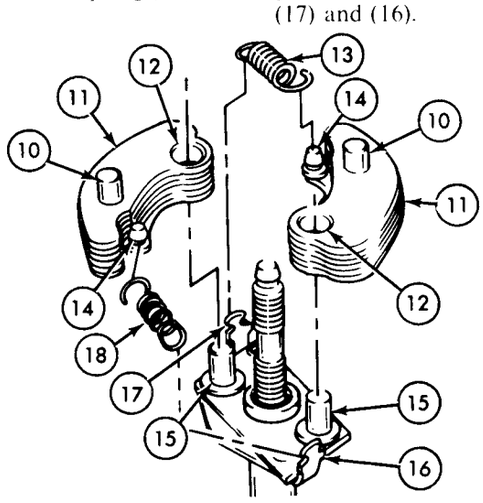

TA 156220

5-8. Distributor Overhaul (Cont'd)

STEP NO.	LOCATION	ITEM	ACTION	REMARKS
22.		Upper thrust washer (5)	Install on distributor shaft (4).	
23.		Distributor shaft and weight assembly (4)	Install in distributor base (6).	
24.		Lower thrust washer (9) and coupling (7)	Secure to distributor shaft (4) with roll pin (8).	Use drift and hammer to install roll pin (8).
		NOTE		
		Step 25 applies to standard ignition and Swiss Controls solid-state ignition distributors only.		
25.		Distributor cam (3)	*a.* Place over top of distributor shaft (4).	
			b. Secure with snapring (2).	
			c. Insert felt wick (1).	Go to end of task.

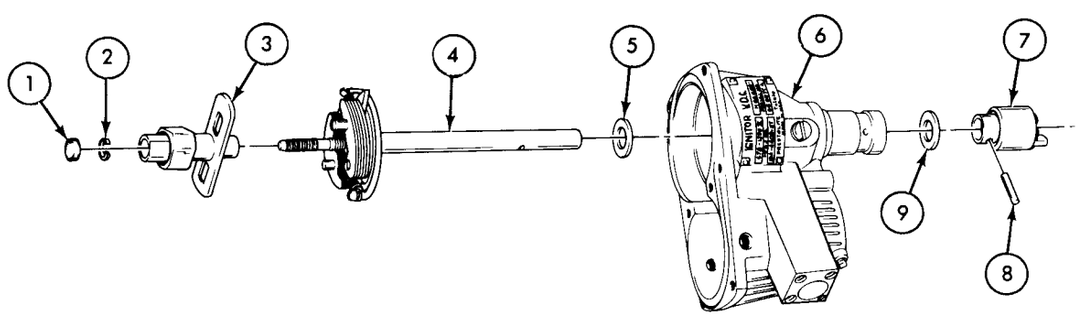

END OF TASK!

FOLLOW-ON TASKS:
- Perform all distributor tests and adjustments as required (section III).
- Install ignition coil capacitor (para 5-7).
- Install coil (TM 9-2320-218-20-1-1).
- Install solid-state or standard ignitions (TM 9-2320-218-20-1-1).
- Install distributor in vehicle (TM 9-2320-218-20-1-1).
- Adjust engine timing (TM 9-2320-218-20-1-1).

TA 156221

Section III. DISTRIBUTOR TESTS AND ADJUSTMENTS

5-9. General

This section provides test and adjustment instructions for the distributor. To find a specific test, see the test and adjustments task summary below:

5-10. Distributor Test and Adjustments Task Summary

5-11. Breaker Point Spring Tension and Contact Gap Adjustments

This task covers:

a. Breaker Point Spring Tension Adjustment *b. Contact Gap Adjustment*

INITIAL SETUP:

Applicable Models	Equipment Condition Reference	Condition Description
All models equipped with standard ignition	TM 9-2320-218-20-1-1	Standard ignition removed.

Test Equipment

Spring resiliency tester (0-80 ounces)

Special Tools

None

Special Environmental Conditions

None

Materials/Parts

None

Personnel Required

One mechanic

General Safety Instructions

None

Manual References

TM 9-2320-218-20-1-1
TM 9-2320-218-34P

STEP NO.	LOCATION	ITEM	ACTION	REMARKS
			a. BREAKER POINT SPRING TENSION ADJUSTMENT	
1.		Spring tester (1)	*a.* Hook on contact arm (2) and pull on line with points (3).	
			b. Take reading as points separate.	Tension should be 17-20 ounces (482-567 grams).
2.		Contact arm (2)	Adjust tension by loosening contact arm terminal screw (5) and sliding spring (4) in or out as necessary.	
3.		Contact arm terminal screw (5)	Tighten and repeat step 1 to check tension again.	

5-11. Breaker Point Spring Tension and Contact Gap Adjustments (Cont'd)

STEP NO.	LOCATION	ITEM	ACTION	REMARKS

b. CONTACT GAP ADJUSTMENT

NOTE

Contact gap adjustment instructions can be found in TM 9-2320-218-20-1-1.

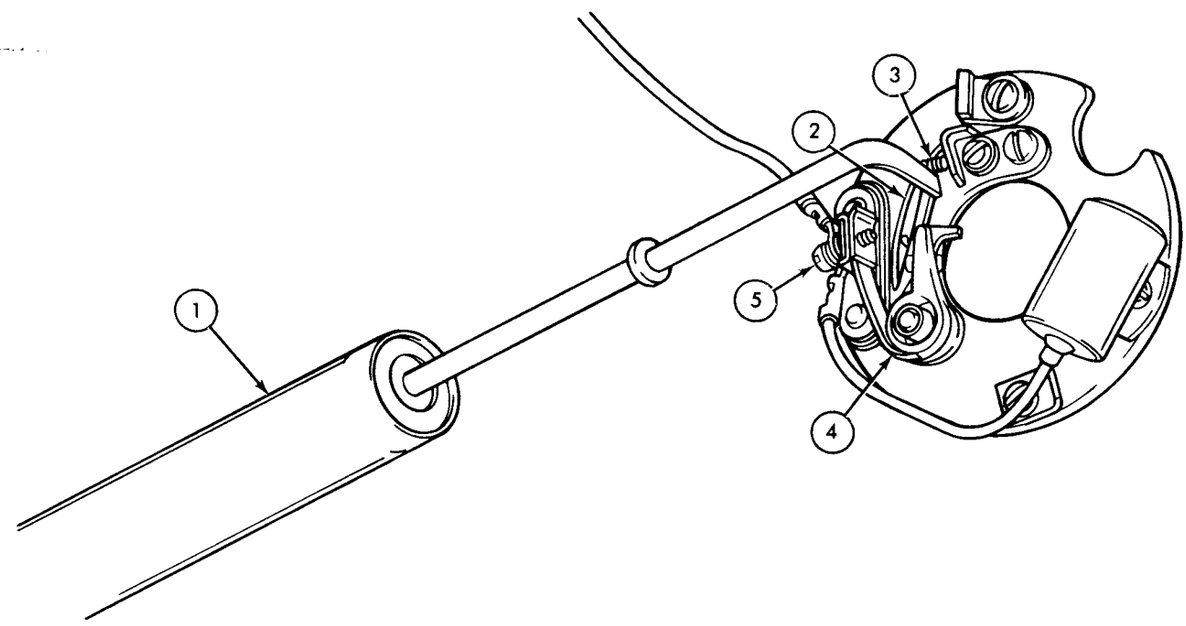

END OF TASK!

FOLLOW-ON TASK: Install standard ignition (TM 9-2320-218-20-1-1).

TA 156222

5-12. Distributor Shaft Side Play and End Play Adjustments

This task covers:

a. Distributor Shaft Side Play Adjustment *b. Distributor Shaft End Play Adjustment*

INITIAL SETUP:

Applicable Models
All

Equipment Condition

Reference	Condition Description
TM 9-2320-218-20-1-1	Distributor cover and cap removed.
TM 9-2320-218-20-1-1	Standard ignition removed or solid-state ignition removed.
TM 9-2320-218-20-1-1	Coil removed.

Test Equipment
Dial indicator
Spring resiliency tester (0-80 ounces)

Special Tools
Outside micrometer

Special Environmental Conditions
Work area clean and away from blowing dirt and dust.

Materials/Parts
None

Personnel Required
One mechanic

General Safety Instructions
None

Manual References
TM 9-2320-218-20-1-1
TM 9-2320-218-34P

STEP NO.	LOCATION	ITEM	ACTION	REMARKS
			a. DISTRIBUTOR SHAFT SIDE PLAY ADJUSTMENT	
1.		Distributor base (4)	Place securely in bench vise (5).	
2.		Dial indicator (1)	Place tip (2) against side of distributor shaft (6) and "zero".	
3.		Tension gage (3)	*a.* Hook around distributor shaft (6) and pull gage (3) until 5 lbs (2.25 kg) of force is applied.	
			b. Observe dial indicator (1).	If more than 0.005 in. (0.127 mm) of side play is indicated, measure shaft (6) diameter using outside micrometer.

5-12. Distributor Shaft Side Play and End Play Adjustments (Cont'd)

STEP NO.	LOCATION	ITEM	ACTION	REMARKS
				If shaft measures between 0.497 and 0.499 in. (12.62 and 12.67 mm), replace distributor.
		b. DISTRIBUTOR SHAFT END PLAY ADJUSTMENT		
4.		Distributor base (4)	Place securely in bench vise (5).	
5.		Dial indicator (1)	Place tip (2) against end of shaft (6) and "zero".	
6.		Distributor shaft (6)	Move to its two extreme positions and read total end play.	If end play is less than 0.003 in. (.076 mm), tap lower end of shaft (6) to loosen. If end play is more than 0.010 in. (254 mm), remove roll pin (8) and coupling (7) from shaft (6), install additional lower thrust washer (s) (9), and reinstall coupling (7) and roll pin (8).

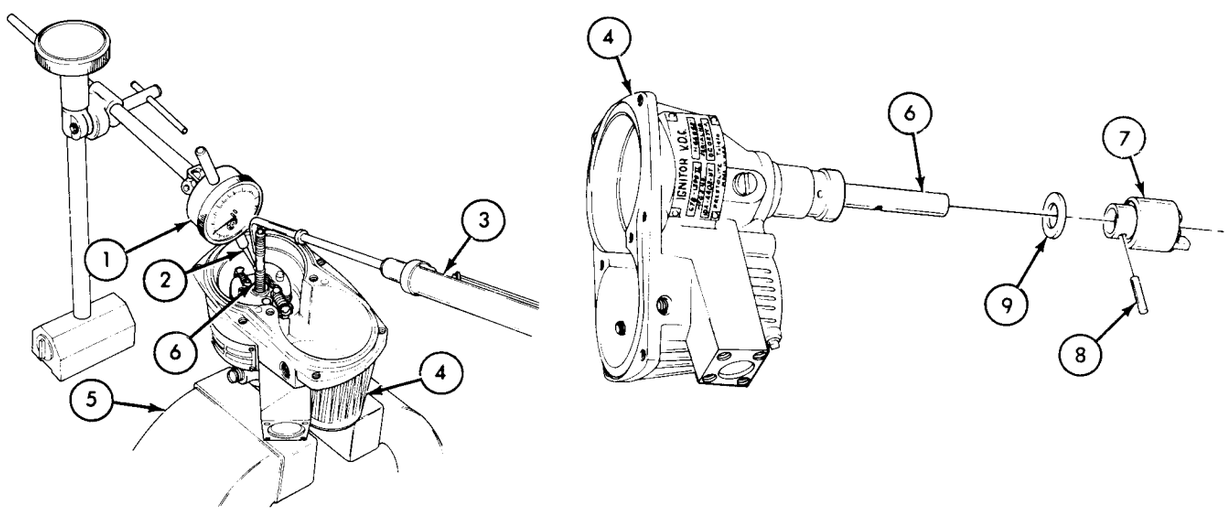

END OF TASK!

FOLLOW-ON TASKS:
- Install coil (TM 9-2320-218-20-1-1).
- Install solid-state or standard ignition (TM 9-2320-218-20-1-1).
- Install distributor cover and cap (TM 9-2320-218-20-1-1).

TA 156223

5-13. Distributor Dwell and Governor Weight Advance Adjustments

This task covers:

a. Distributor Dwell Advance Adjustment *b. Governor Weight Advance Adjustment*

INITIAL SETUP:

Applicable Models
All

Equipment Condition

Reference	Condition Description
TM 9-2320-218-20-1-1	Distributor removed.
TM 9-2320-218-20-1-1	Distributor cover and cap removed.
TM 9-2320-218-20-1-1	Standard ignition or solid-state ignition removed.
Para 5-7	Ignition coil capacitor removed.

Test Equipment
Distributor test fixture (NSN 4910-00-392-2939)

Special Tools
None

Special Environmental Conditions
Work area clean and away from blowing dirt and dust.

Materials/Parts
None

Personnel Required
One mechanic

General Safety Instructions
None

Manual References
TM 9-2320-218-20-1-1

STEP NO.	LOCATION	ITEM	ACTION	REMARKS
		a. DISTRIBUTOR DWELL ADVANCE ADJUSTMENT		
1.		Distributor (2)	Mount on test fixture (1) and connect test leads as specified by manufacturer's instructions.	Set fixture (1) for correct rotation.
2.		Distributor test fixture (1)	Start and set speed at 400 rpm.	Advance indicator should read 1.7 - 3.2 degrees. If advance is too high, increase tension on weak weight spring (4) by bending weak spring lug (3) outward. If advance is too low, decrease tension on weak spring (4).

5-13. Distributor Dwell and Governor Weight Advance Adjustments (Cont'd)

STEP NO	LOCATION	ITEM	ACTION	REMARKS

NOTE

If distributor dwell advance cannot be adjusted, the cam, distributor shaft, moveable breaker point arm, or rubbing block is worn, misalined, or shaft is bent.

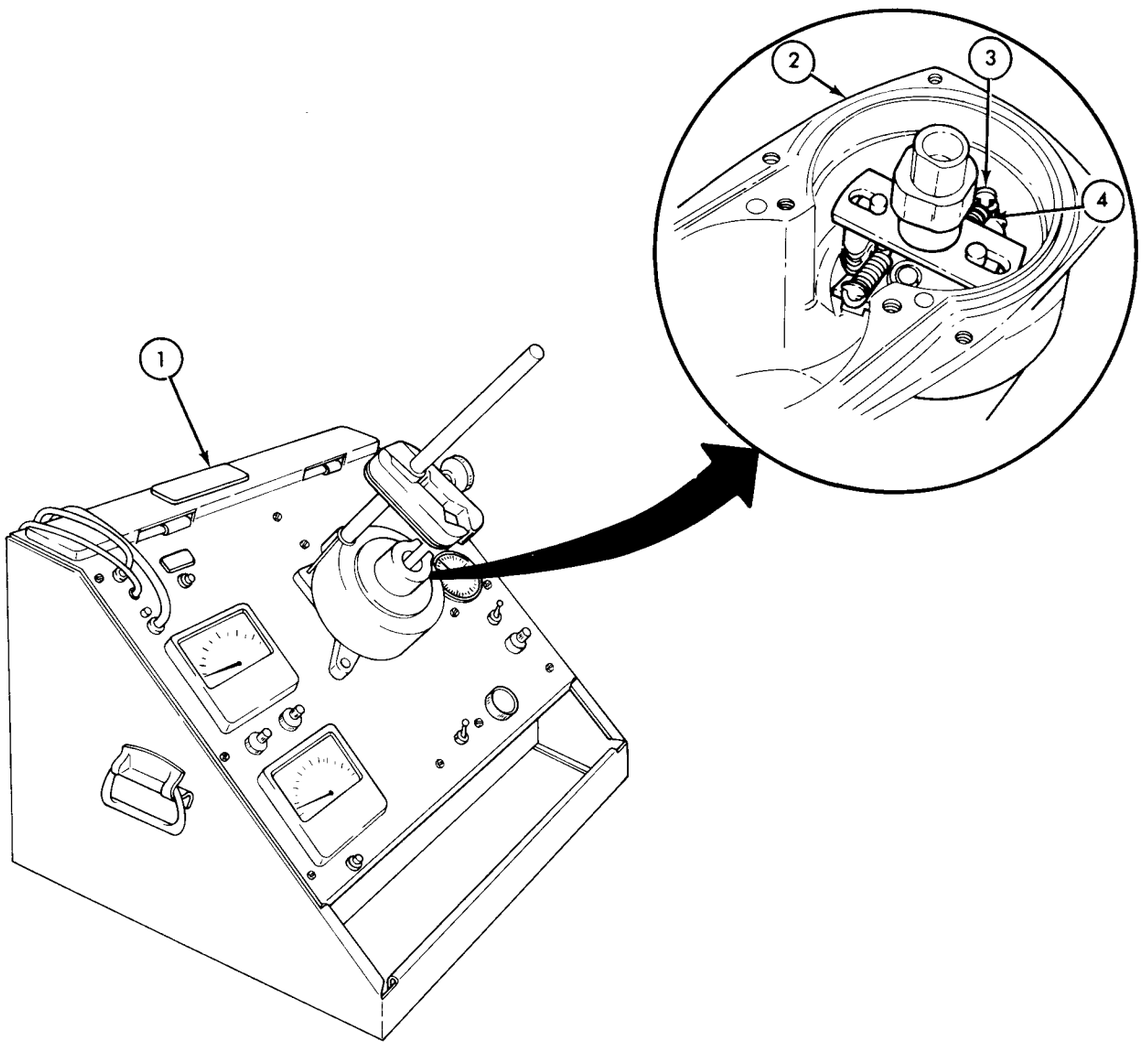

TA 156224

5-13. Distributor Dwell and Governor Weight Advance Adjustments (Cont'd)

STEP NO.	LOCATION	ITEM	ACTION	REMARKS
b. GOVERNOR WEIGHT ADVANCE ADJUSTMENT				
3.		Distributor (6)	Mount on test fixture (1) and connect test leads as specified by manufacturer's instructions.	Set fixture (1) for correct rotation.
4.		Distributor test fixture (1)	*a.* Start and increase speed slowly until spark just begins to advance.	
			b. Reduce speed 75-150 rpm and set indicator to zero.	
			c. Increase speed to 400 rpm.	Advance indicator should read 1-3 4 - 3-1 4 degrees. If advance is too high, increase tension on weak weight spring (5) by bending weak spring lug (4). If advance is too low, decrease tension on weak spring (5).
			d. Check 250 rpm setting and then check and adjust on 400 rpm point.	See steps *a* through *c* above.
			e. Increase speed to 1600 rpm.	Advance indicator should read 11-3 4 - 13 degrees. If advance is too high, increase tension on strong weight spring (3) by bending strong spring lug (2) outward. If advance is too low, decrease tension on strong spring (3). Check advance at all points in specifications (table 5-2). If there is more than one degree difference at any one point, there is friction in governor weight assembly.

5-13. Distributor Dwell and Governor Weight Advance Adjustments (Cont'd)

STEP NO.	LOCATION	ITEM	ACTION	REMARKS

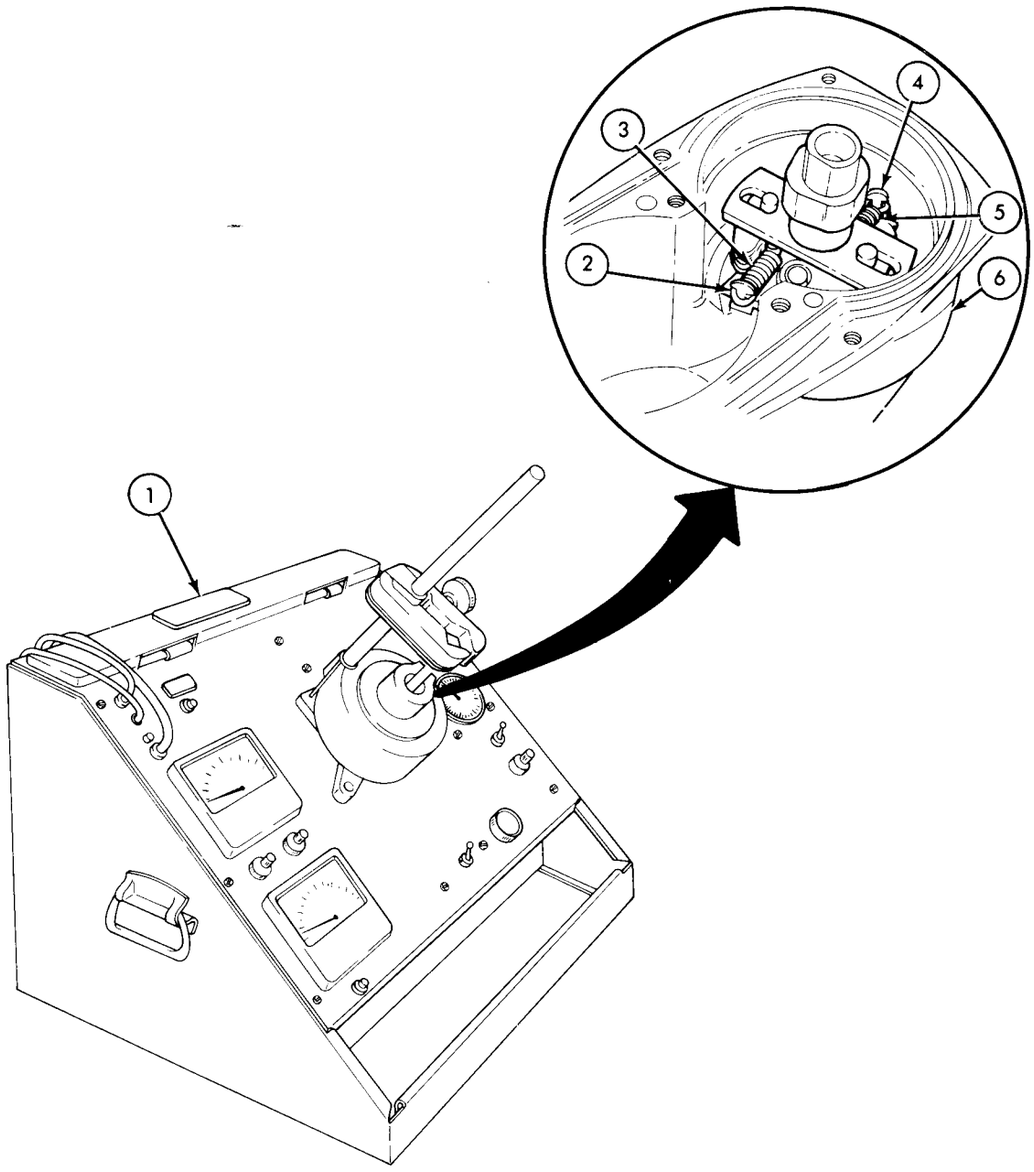

END OF TASK!

FOLLOW-ON TASKS:
- Install ignition coil capacitor (para 5-7).
- Install solid-state or standard ignition (TM 9-2320-218-20-1-1).
- Install distributor cover and cap (TM 9-2320-218-20-1-1).
- Install distributor if removed (TM 9-2320-218-20-1-1).

TA 156225

5-14. Distributor Leakage Test and Distributor Timing

This task covers:

a. Distributor Leakage Test *b. Distributor Timing*

INITIAL SETUP:

Applicable Models
All

Equipment Condition

Reference	Condition Description
TM 9-2320-218-20-1-1	Distributor removed.

Test Equipment
None

Special Tools
Safety goggles

Special Environmental Conditions
None

Materials/Parts
Sealant (NSN 8030-00-874-5875)
Air hose
Vent hole pipe plugs

Personnel Required
One mechanic

General Safety Instructions
Always wear safety goggles when using compressed air.

Manual References
TM 9-2320-218-20-1-1
TM 9-2320-218-34P

STEP NO.	LOCATION	ITEM	ACTION	REMARKS
			a. DISTRIBUTOR LEAKAGE TEST	
1.		Air hose (3)	Connect to ventilating hole (2) in distributor base (4).	
2.		Vent plug (5)	Install in remaining vent hole.	
3.		Distributor (1)	Apply 6 psi (41 kPa) of air pressure and place under water.	If bubbles occur at any point except around drive shaft (6), inspect seals and gaskets.
4.		Seals and gaskets	Check for cracks, damage, and distortion.	Replace if cracked, damaged, or distorted.
5.		Distributor (1)	*a.* Repeat steps 1, 2, and 3 to retest for leakage.	If bubbles persist after seal replacement, perform step 6.

5-14. Distributor Leakage Test and Distributor Timing (Cont'd)

STEP NO.	LOCATION	ITEM	ACTION	REMARKS
			b. Disassemble components.	See TM 9-2320-218-20-1-1.

WARNING

Compressed air source will not exceed 30 psi. When cleaning with compressed air, eyeshields must be worn. Failure to wear eyeshields may result in injury to the eyes and loss of sight.

			c. Dry with compressed air.	
			d. Reassemble components.	See TM 9-2320-218-20-1-1.

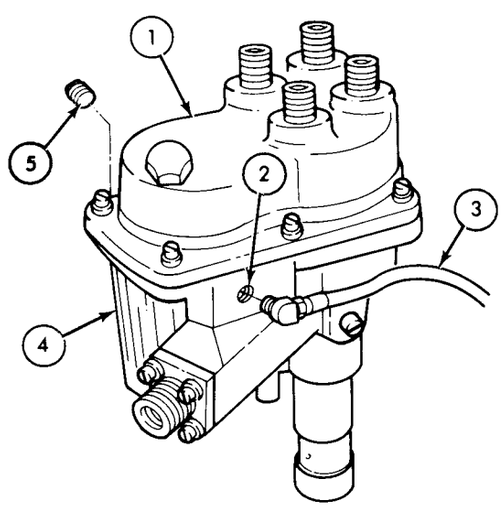

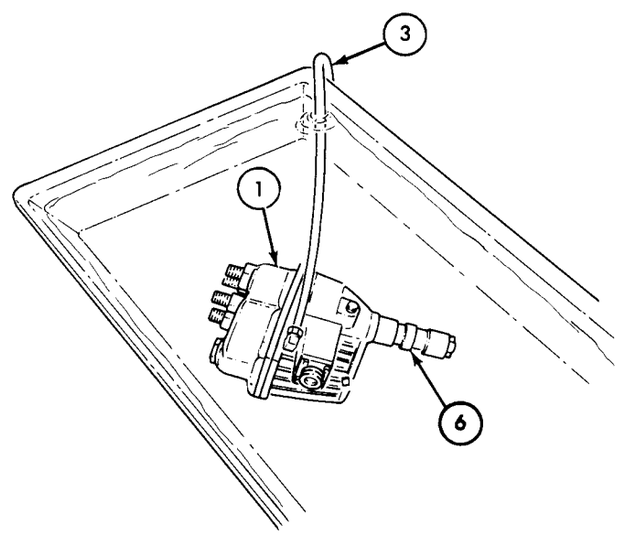

TA 156226

5-14. Distributor Leakage Test and Distributor Timing (Cont'd)

STEP NO.	LOCATION	ITEM	ACTION	REMARKS
6.		Sealant	Apply sparingly to distributor cover (1) and base (2) mating flanges.	Avoid any runoff of sealant.
7.		Distributor	Repeat steps 1, 2, and 3 to retest for leakage.	

b. DISTRIBUTOR TIMING

NOTE

Distributor timing instructions are found in TM 9-2320-218-20-1-1.

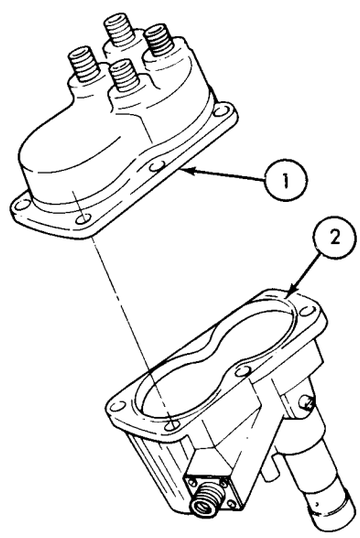

END OF TASK!

FOLLOW-ON TASK: Install distributor (TM 9-2320-218-20-1-1).

TA 156227

Section IV. REPAIR AND REPLACEMENT STANDARDS

5-15. General

This section provides direct and general support repair and replacement standards for the distributor assembly. The repair and replacement standards give minimum, maximum, and key clearance of new or repaired parts. An asterisk (*) in the "wear limits" column indicates that a part should be replaced when worn beyond measurements given in "size and fit of new parts" column. In "size and fit of new parts" column, the letter "L" indicates a loose fit (clearance), the letter "T" indicates a tight fit (interference).

5-16. Specifications and Adjustments — Distributor

Table 5-2 lists specifications and adjustments necessary for repair of both the breaker point and solid-state ignition distributors.

Table 5-2. Specifications and Adjustments — Distributor

	STANDARD	METRIC
Breaker point:		
Gap	0.017 - 0.22 in.	.4 - .55 mm
Spring tension	17 - 20 ounces	482 - 567 g
Dwell	39° - 46°	
Condenser, breaker plate	18 - 21 microfarads	
Breakerless:		
Trigger wheel to magnetic pickup clearance	0.010 in.	.25 mm
Capacitor, primary connector	18 - 21 microfarads	
Governor advance:		
Speed of distributor:	Degree of advance	
200	0	
400	1-3/4 - 3-1/4	
900	7-3/4 - 9	
1600	11-3/4 - 13	
2200 and over	14 - 15-1/2	
At speeds above 2200, advance should not increase beyond 16°.		
Shaft:		
End-play	0.003 - 0.010 in.	.076 - 1.93 mm
Runout, top to bearing	0.0015 in.	.04 mm
Side play	0.001 - 0.005 in.	.025 - .127 mm

5-17. Repair and Replacement Standards — Distributor

The components covered by the repair and replacement standards listed in table 5-3 are illustrated below. To find the component and its tolerance requirements, match the reference number listed to the extreme left in table 5-3.

Table 5-3. Repair and Replacement Standards — Distributor

Ref. No.	Point of Measurement	Size and Fit of New Parts	Wear Limits
1.	Shaft diameter	0.498 - 0.499 in. (12.6 - 12.7 mm)	0.001 in. (.025 mm)
2.	Bearing inner diameter	0.4995 - 0.500 in. (12.6 - 12.7 mm)	0.005 in. (1.27 mm)

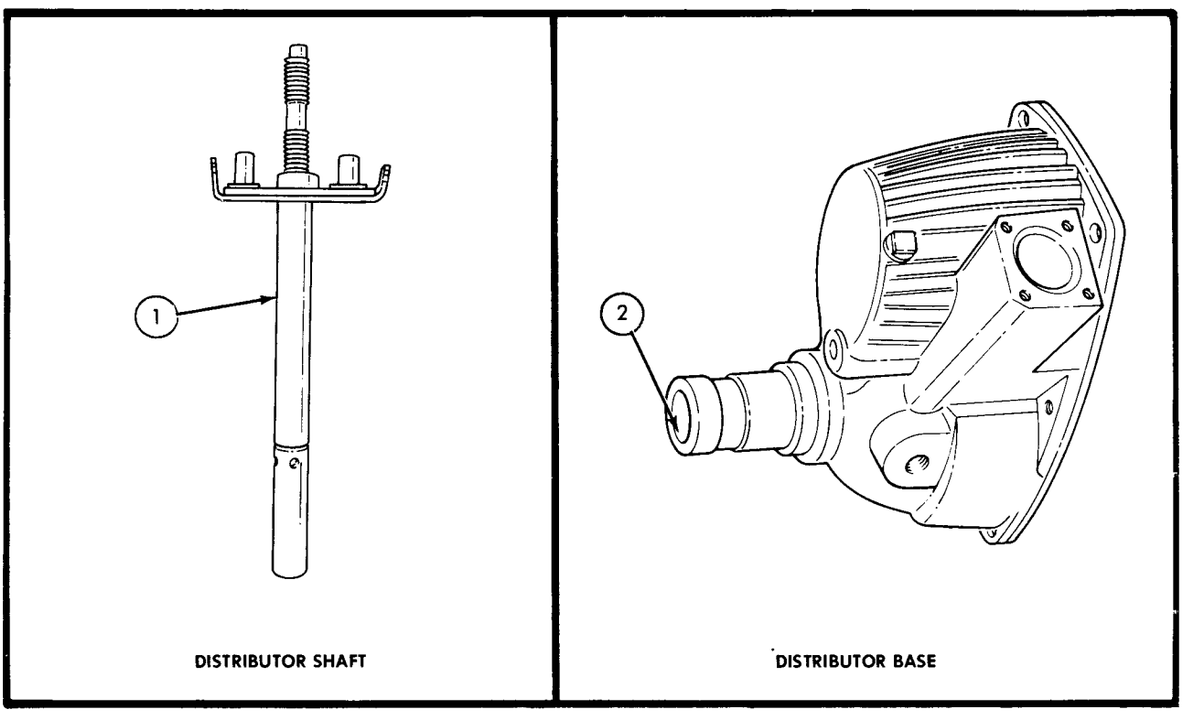

TA 156228

CHAPTER 6

STARTER AND ALTERNATOR ASSEMBLY MAINTENANCE

6-1. Overview

a. This chapter provides maintenance instruction and information about wear, fit, adjustment, test, and replacement parts for the starter assembly. Related information is covered in the following sections:

b. The 60 amp alternator maintenance repair and testing are covered in TM 9-2920-225-34.

c. Section II is preceded by a list of procedures covered within that section and provides a paragraph and page number leading you to each task.

Section I. DESCRIPTION and DATA

6-2. General

This section provides description and data for the starter assembly.

6-3. Tabulated Data

The starter assembly is shown below. Tabulated data for the starter is in table 6-1:

Table 6-1. Tabulated Data — Starter Assembly

Make	Prestolite optional Delco-Remy
Type	24 volt DC, series wound, two-pole, four brush, water proof
Drive	following- through (over running clutch)
Mounted	right rear face of flywheel housing.
Switch	located on toe board below clutch pedal

6-4. Description - Starter Assembly

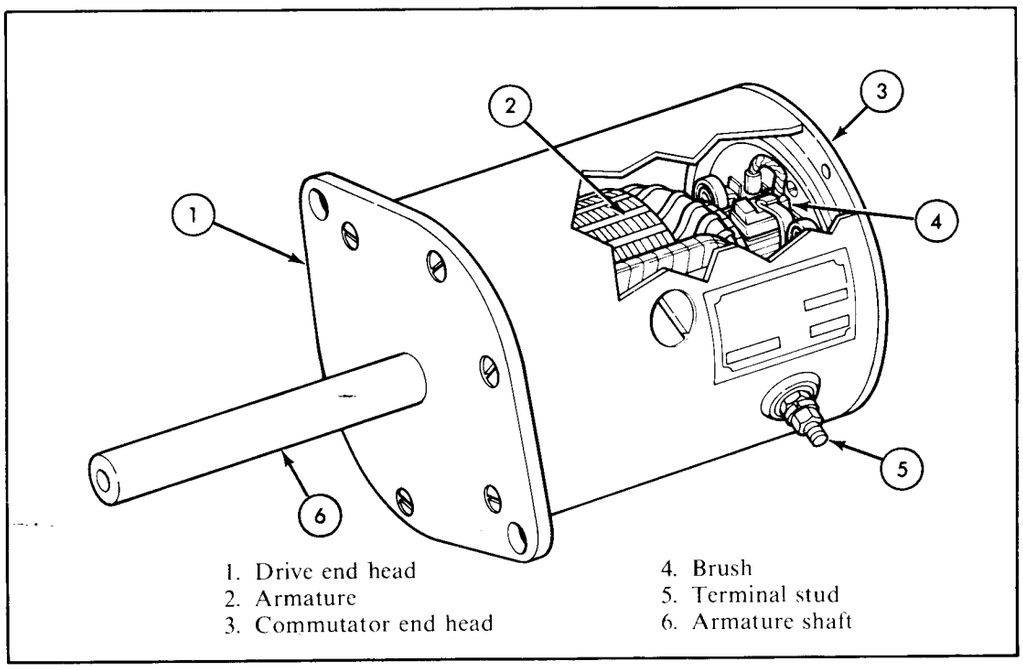

Section II. STARTER ASSEMBLY MAINTENANCE

6-5. General

This section provides maintenance assigned to the direct and general support levels for the starter assembly and components. Removal of the starter assembly from the vehicle, and starter drive maintenance procedures are addressed in TM 9-2320-218-20-1-1. To find a specific starter maintenance procedure, see the maintenance task summary below:

6-6. Starter Assembly Maintenance Task Summary

TASK PARA	PROCEDURES	PAGE NO.
6-7	Starter Assembly Maintenance a. Disassembly b. Cleaning c. Inspection, Test, and Repair d. Reassembly e. Armature End Play Adjustment	6-3
6-8	Starter No-Load Current Test a. Low Voltage Circuit Tester Hookup b. No-Load Current Test	6-26

TA 156050

6-7. Starter Assembly Maintenance

This task covers:

a. Disassembly
b. Cleaning
c. Inspection, Test, and Repair
d. Reassembly
e. Armature End Play Adjustment

INITIAL SETUP:

Applicable Models

All

Equipment Condition Reference	Condition Description
TM 9-2320-218-20-1-1	Starter motor assembly removed from vehicle.
TM 9-2320-218-20-1-1	Pinion drive assembly removed.

Test Equipment

Growler fixture
Multimeter
Dial Indicator

Special Tools

Spring resiliency tester (0-80 oz)
Arbor press
Adapter
3/32-in. (2.38 mm) drill bit
Safety goggles

Special Environmental Conditions

Work area well ventilated

Materials/Parts

Drycleaning solvent
Two "O" rings
Four rivets
2 0 sandpaper
Insulating varnish (NSN 5970-00-162-7524)
OE/HDO 30 oil
GAA grease

Personnel Required

One mechanic

General Safety Instructions

- Keep fire extinguisher nearby when using drycleaning solvent.
- Always wear safety goggles when using compressed air.

Manual References

TM 9-2320-218-20-1-1
TM 9-2320-218-34P

STEP NO.	LOCATION	ITEM	ACTION	REMARKS

a. DISASSEMBLY

6-7. Starter Assembly Maintenance (Cont'd)

STEP NO.	LOCATION	ITEM	ACTION	REMARKS
1.		Armature shaft (3)	Remove all burrs.	Scribe mark on starter frame (5) to note position of locating tab (4).
2.	Commutator end head (1) to starter frame (5)	Six screws and lock-washers (6)	Remove.	Note that position of locating tab (4) is 90° clockwise from terminal stud (2).

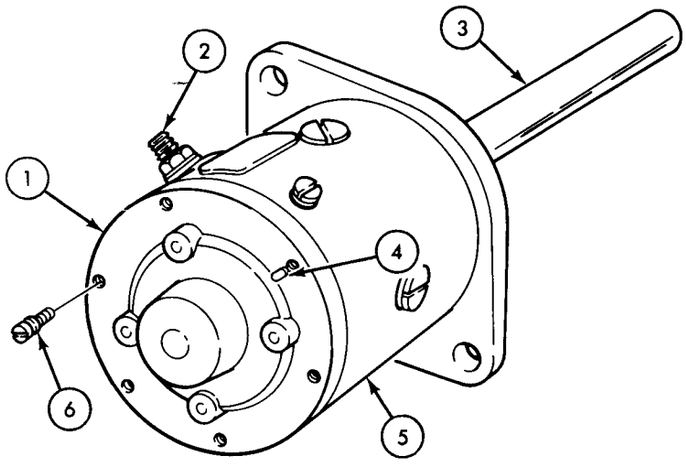

3.		Armature shaft drive end (3)	Tap with soft hammer until commutator end head (1) is approximately 1 to 2 in. (25-50 mm) from frame (5).	
4.	Two field brushes (7) to brush holder plate (8)	Brush spring (9)	Lift and remove from each brush (7).	
5.		Two field brushes (7)	Remove from brush holder plate (8).	

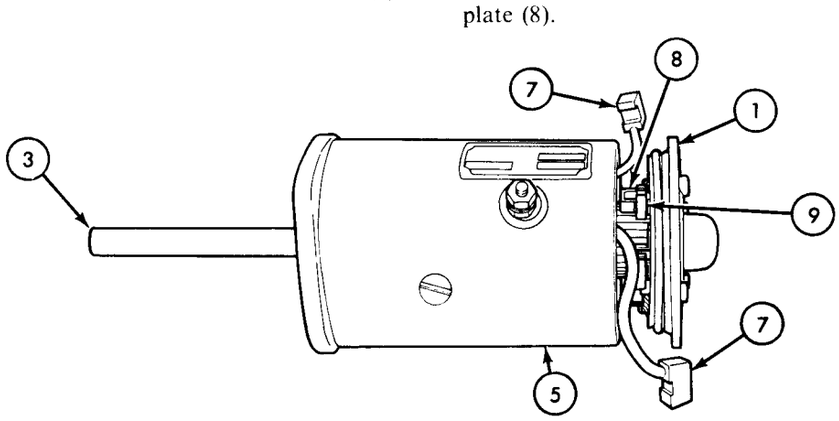

TA 156051

6-7. Starter Assembly Maintenance (Cont'd)

STEP NO.	LOCATION	ITEM	ACTION	REMARKS
6.		Commutator end head (1)	Remove from armature (11).	
7.		Armature (11)	Pull out of starter frame (5).	
8.	Armature (11)	Thrust washers (10)	Remove from each end.	

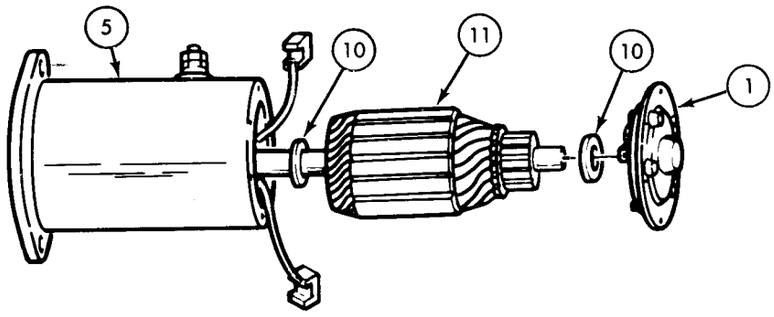

NOTE

Scribe a mark on drive end head (12) and starter frame (5) so they can be properly matched at reassembly.

9.	Drive end head (12) to starter frame (5)	Six screws and lock-washers (14)	Remove.	
10.		Drive end head (12)	Remove from starter frame (5).	
11.	Drive end head (12)	"O" ring (13)	Remove.	Discard "O" ring (13).
12.		Bearing (15)	Remove from drive end head (12).	Use arbor press and adaptor (16).

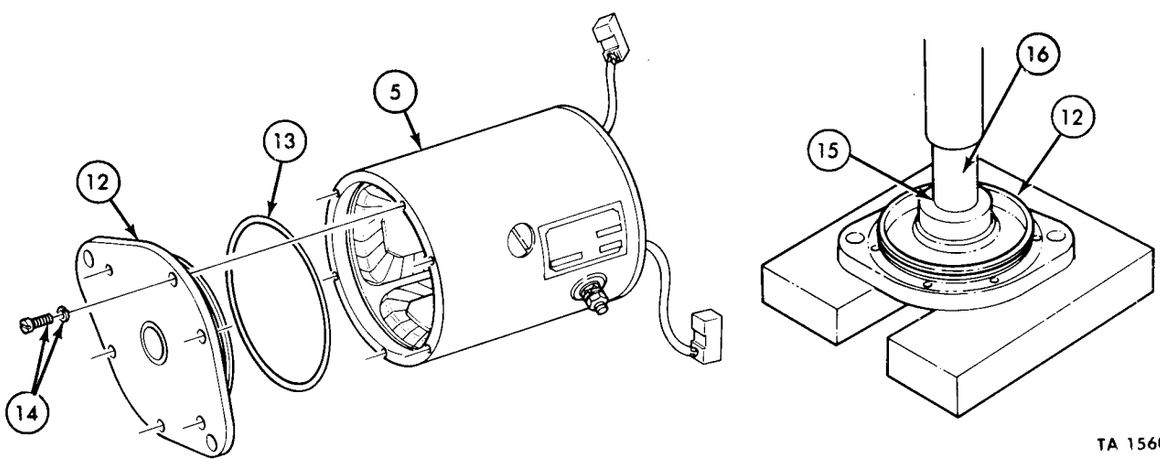

TA 156052

6-7. Starter Assembly Maintenance (Cont'd)

STEP NO.	LOCATION	ITEM	ACTION	REMARKS
13.	Commutator end head (6)	"O" ring (5)	Remove.	Discard "O" ring (5).
		NOTE		
		Note positions of two ground brushes (2) in relation to locating tab on outside of commutator end head (6).		
14.	Brush holder plate (3) to commutator end head (6)	Four screws (7)	Remove.	
15.		Brush holder plate (3)	Remove from commutator end head (6).	
16.	Brush holder plate (3)	Four brush springs (8)	Twist counterclockwise and lift to remove.	
17.		Two ground brushes (2)	Remove from brush holders (1).	
18.	Ground brush holder (1) to brush holder plate (3)	Four rivets (4)	Drill out.	Use 3/32 in. (2.38 mm) drill bit.
19.		Two ground brush holders (1) and ground brushes (2)	Remove from brush holder plate (3).	

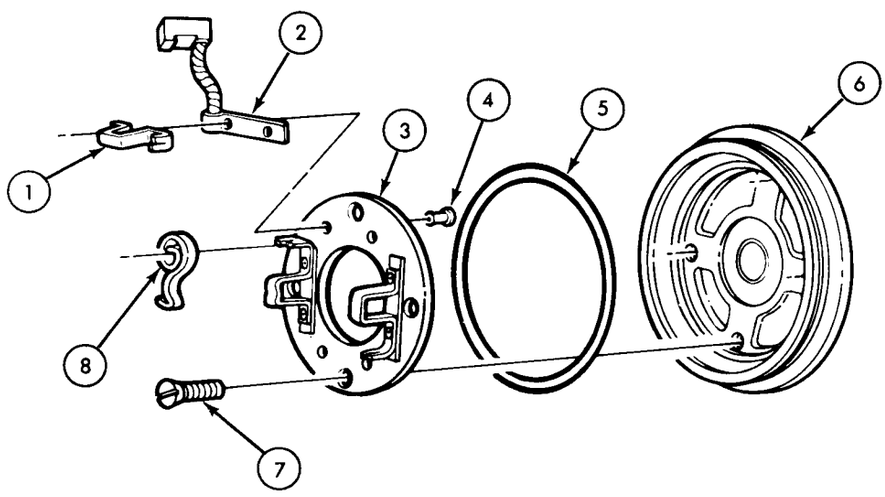

TA 156053

6-7. Starter Assembly Maintenance (Cont'd)

STEP NO.	LOCATION	ITEM	ACTION	REMARKS

b. CLEANING

WARNING

- Drycleaning solvent is flammable and will not be used near an open flame. A fire extinguisher will be kept nearby when the solvent is used. Use only in well ventilated places. Failure to do this may result in injury to personnel and/or damage to equipment.
- Compressed air source will not exceed 30 psi. When cleaning with compressed air, eyeshields must be worn. Failure to wear eyeshields may result in injury to the eyes and loss of sight.

CAUTION

Do not allow drycleaning solvent to come in contact with brushes. It will cause excessive arcing after reassembly.

20.		Two brushes (2)	Wipe clean with dry cloth.

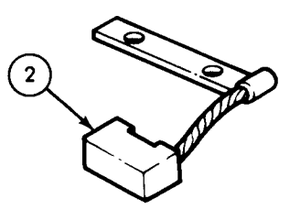

TA 156054

6-7. Starter Assembly Maintenance (Cont'd)

STEP NO.	LOCATION	ITEM	ACTION	REMARKS
		CAUTION Do not use emery cloth to clean commutator (1) because emery dust and/or metal burrs can short out unit.		
21.		Commutator contact surface (1)	*a.* Clean lightly with No. 2/0 sand paper. *b.* Blow off dust with compressed air.	Normal color of contact surface is an even, higher burnished dark copper.

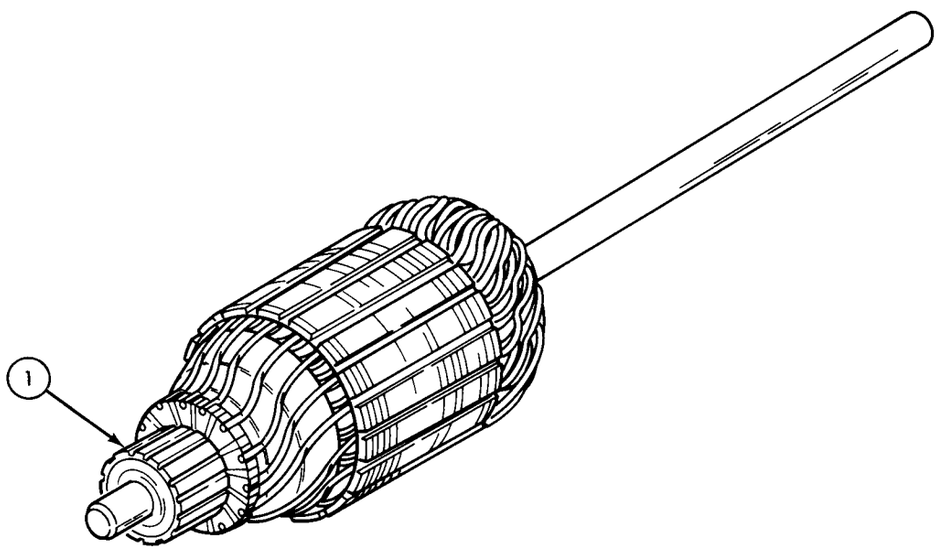

		NOTE Use care when cleaning starter frame and field coils to avoid damaging protective insulation.		
22.		All other starter motor components	*a.* Clean thoroughly with a cloth dampened with drycleaning solvent. *b.* Dry thoroughly with compressed air.	

TA 156055

6-7. Starter Assembly Maintenance (Cont'd)

STEP NO.	LOCATION	ITEM	ACTION	REMARKS
c. INSPECTION, TEST, AND REPAIR				
23.		All screws, nuts,threaded holes and plugs	Inspect for wear and thread damage.	Replace if worn or threads damaged.
24.		Two field brushes (4)	Inspect for damage and wear.	If damaged or worn, replace starter assembly (see table 6-2 for wear limits).
25.		Frame (5) and field coils (3)	*a.* Inspect for cracks, burrs, frayed insulation, and loose connections.	Clinch and resolder all loose connections. Replace if cracked, burred, or insulation frayed.
		NOTE Make sure field brushes (4) do not touch frame (5) during step 25*b*.		
			b. Test for grounds by setting meter (6) to RX1, touching one probe of multimeter (6) to stud (2) and touching other probe to frame (5).	If meter (6) needle moves, frame (5) and field coils (3) are grounded. Starter assembly must be replaced.

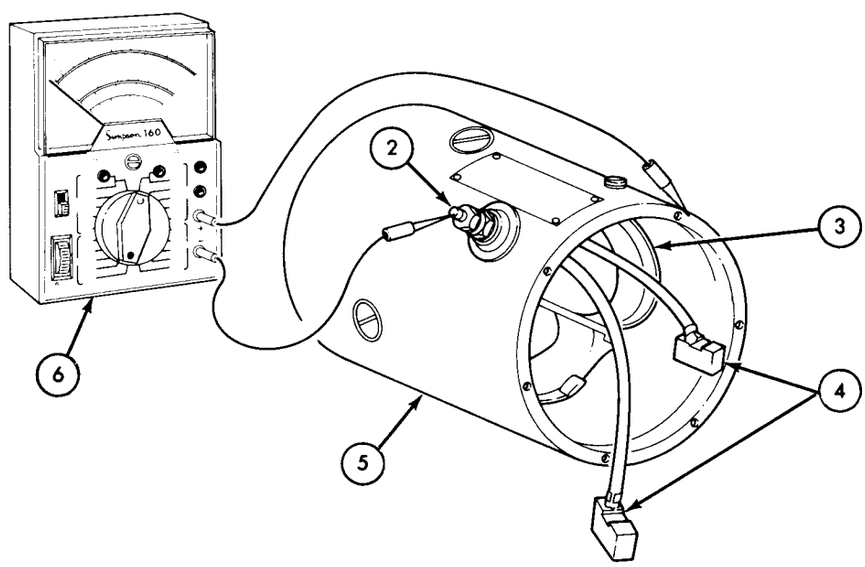

TA 156056

6-7. Starter Assembly Maintenance (Cont'd)

STEP NO.	LOCATION	ITEM	ACTION	REMARKS
			c. Test for open circuits by setting meter (3) to RX1, touching one probe of multimeter (3) to stud (1), and alternately touching other probe to two field brushes (2).	If open circuit is indicated, replace starter assembly.

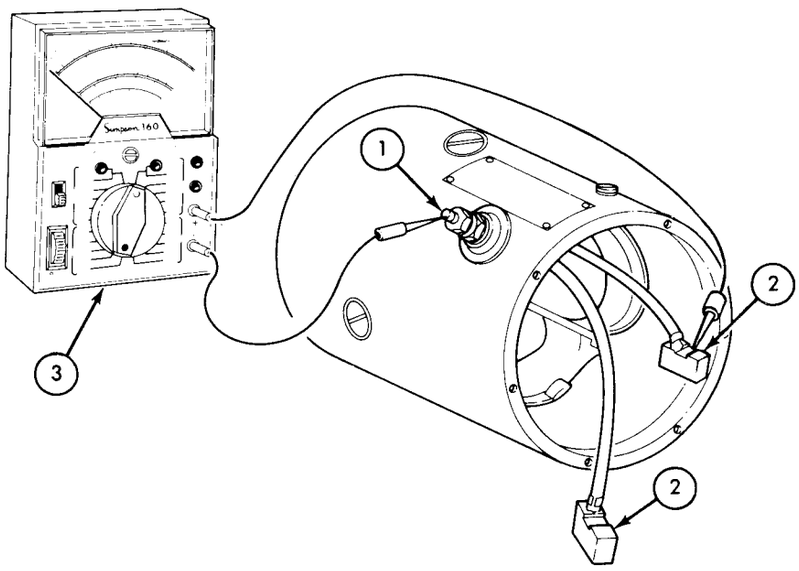

26.		Armature (5)	*a.* Inspect for rough, pitted, scored and burned commutator contact surface.	Repair or replace commutator contact surface if rough, pitted, scored, or burned.
			b. Inspect for coils (6) out of core slots (4) and loose wiring.	Restake and solder as necessary.
			c. Inspect coils (6) for excessive scoring and loose wiring.	If excessively scored or wiring loose, replace starter assembly.
27.		Armature (5)	Test for grounds by setting multimeter (3) to RX1, touching negative probe of multimeter (3) to shaft end (8), and touching positive probe to each commutator bar riser (7).	If meter (3) needle moves, armature is grounded. Starter assembly must be replaced.

TA 156057

6-7. Starter Assembly Maintenance (Cont'd)

STEP NO.	LOCATION	ITEM	ACTION	REMARKS

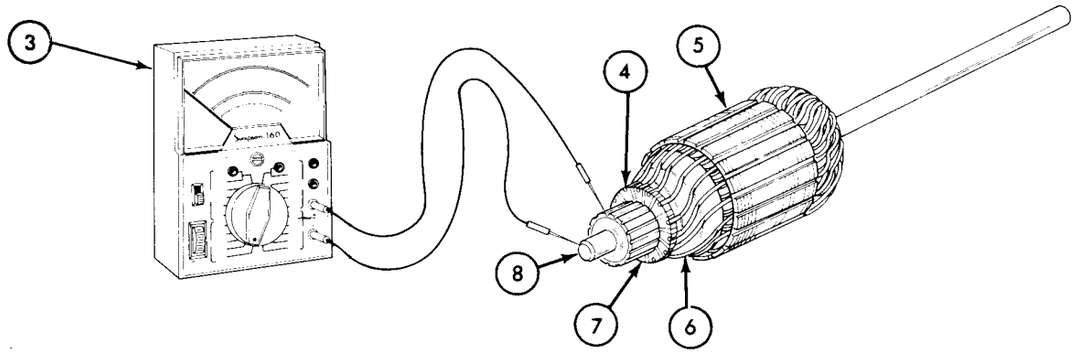

28.		Armature shaft (10)	Inspect for wear at all three contact points (14), (11), and (10).	If worn, replace starter assembly (see table 6-2 for wear limits).
29.		Armature (5)	Test for shorted windings by placing in growler fixture (13) and holding steel strip (9) or hacksaw blade 1/16 in. (1.5 mm) over each core slot (12).	Blade (9) will vibrate if windings are shorted. If shorted, replace starter assembly.

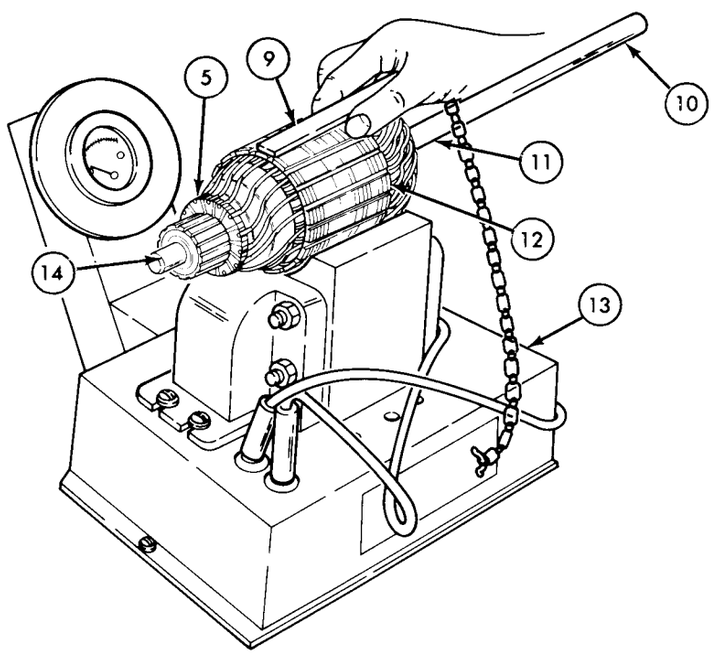

TA 156058

6-7. Starter Assembly Maintenance (Cont'd)

STEP NO.	LOCATION	ITEM	ACTION	REMARKS
30.		Armature (2)	Check run-out of shaft (5) and commutator (4) as follows:	
			a. Support ends (3) of shaft (5).	
			b. Install dial indicator (1) on shaft drive end (5) at bearing location.	
			c. Rotate shaft (5) to check for out-of-round.	See repair and replacement standards (table 6-2) for tolerances.

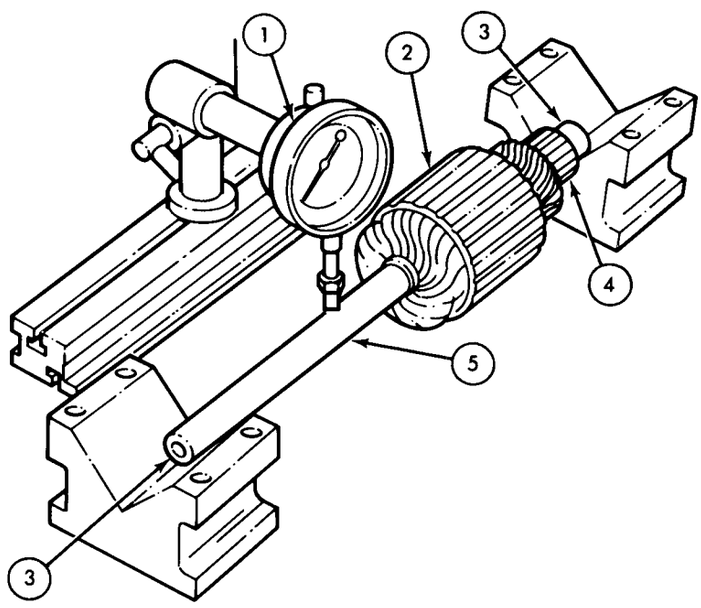

	d. Install dial indicator (1) on commutator (4) and repeat step 30*c*.	If out-of-round beyond acceptable tolerances turn on a lathe. Put cutting tool 1/32 in. (.794 mm) below center line (6) of armature shaft (5) (see table 6-2 for tolerances).
	e. Check outside diameter of commutator (4).	See repair and replacement standards (table 6-2).

TA 156059

6-7. Starter Assembly Maintenance (Cont'd)

STEP NO.	LOCATION	ITEM	ACTION	REMARKS
				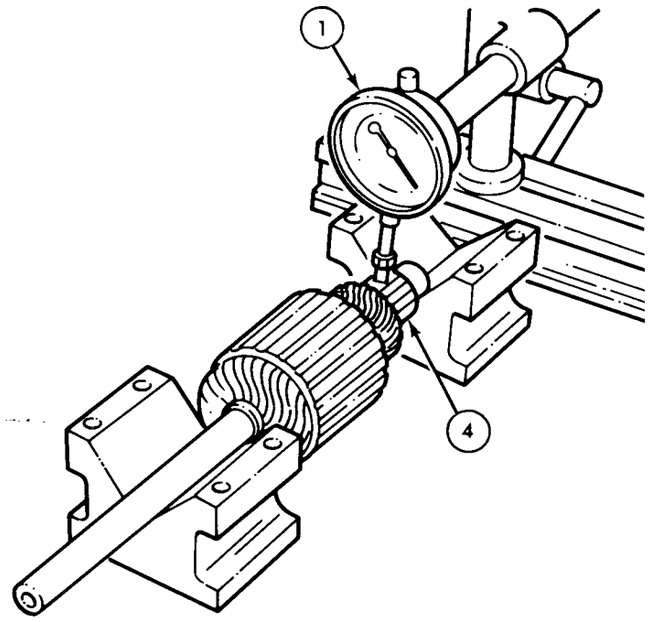 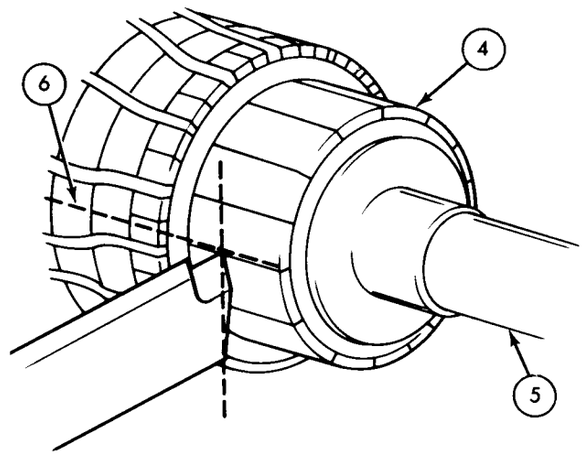
31.	Armature (2)	Commutator (4)	Under cut mica (7).	See repair and replacement standards (table 6-2) for depth of under cut. Use a three corner file to start grooves, and then a piece of hacksaw blade.

NOTE

When a cut is made it should continue across entire surface without stopping.

32.		Commutator (4)	Remove burrs and polish surface.	Use 2/0 sand paper while rotating at 1500 rpm in a lathe.

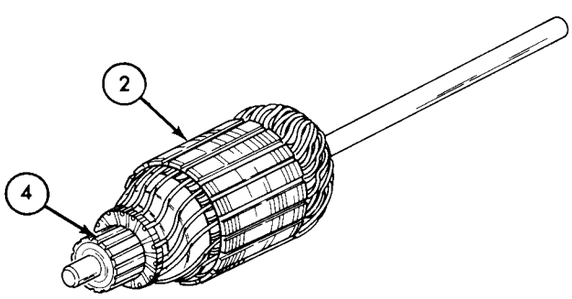

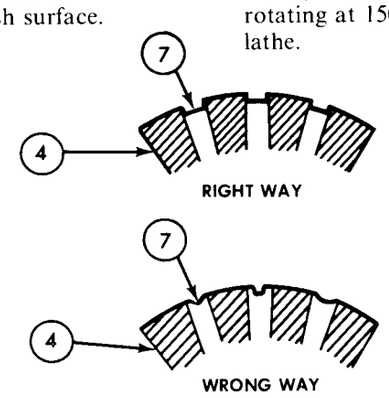

TA 156060

6-7. Starter Assembly Maintenance (Cont'd)

STEP NO.	LOCATION	ITEM	ACTION	REMARKS
33.		Commutator end head (1), brush plate (7), and tension springs (4)	Inspect for cracks, corrosion, distortion, and wear.	If cracked, corroded, distorted, or worn, replace (see table 6-2 for wear limits).
34.		Brushes (3)	Check for wear.	Replace if worn (see table 6-2 for wear limits).
35.		Commutator end head bearing (2)	Check inside diameter for scores and wear.	Replace head (1) if scored or worn beyond limits (see table 6-2 for wear limits).
36.	Brush plate (7)	Two insulated brush holders (6)	Test for grounds by setting multimeter (5) to RX1, touching one probe to brush holder (6), and touching other probe to plate (7).	If meter needle moves, brush holders (6) and plate (7) are grounded. Starter assembly must be replaced.

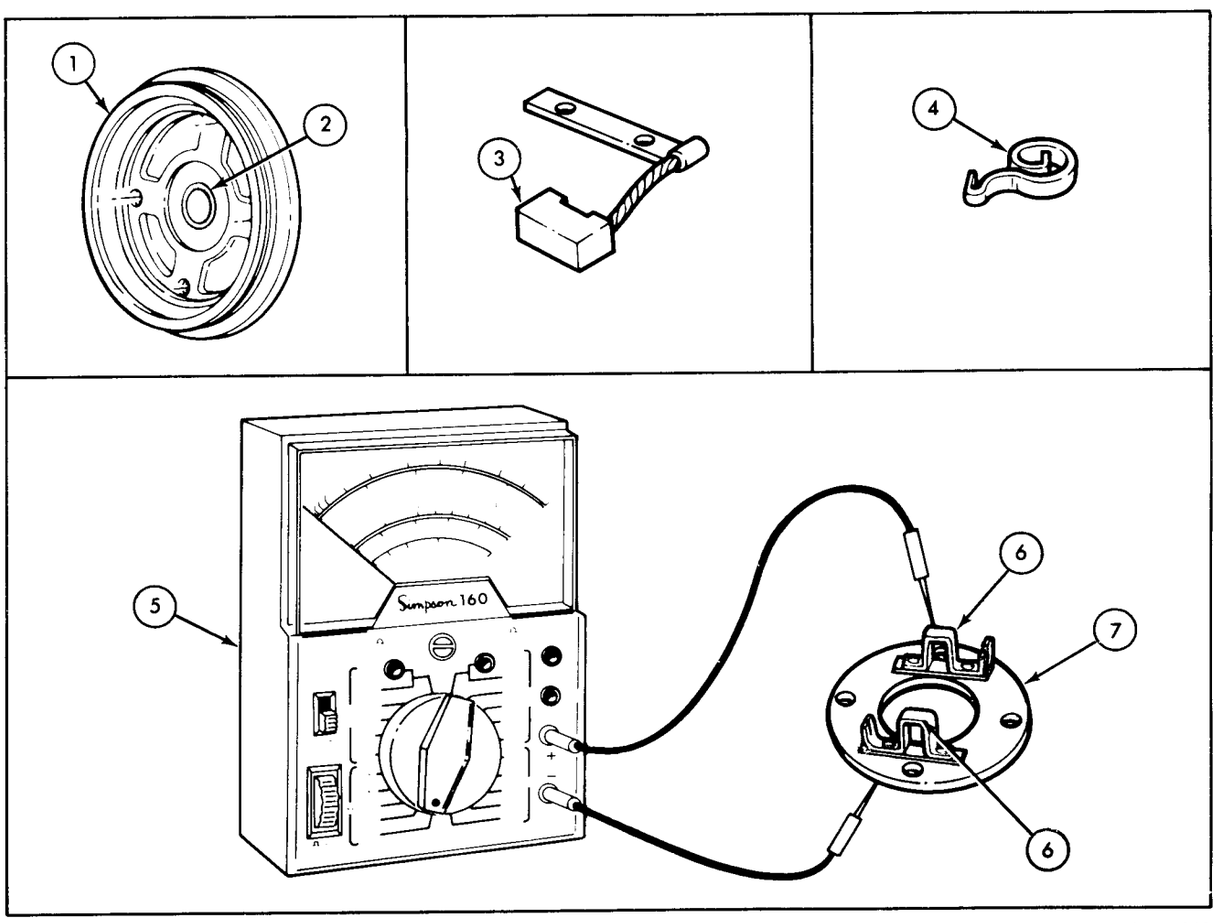

TA 156061

6-7. Starter Assembly Maintenance (Cont'd)

STEP NO.	LOCATION	ITEM	ACTION	REMARKS
37.		Drive end head (8)	Inspect for cracks, and scored oil ring (9) and bearing (10) seating surfaces.	If cracked or seating surfaces scored, replace starter assembly.
38.		Drive end bearing (11)	Check inside diameter for scores and wear.	Replace if scored or worn beyond limits (see table 6-2 for wear limits).
39.		Starter drive assembly (13)	*a.* Inspect pinion (12) and internal spirals (14) for cracks, broken teeth and wear.	Replace if pinion (12) or spirals (14) are cracked, broken, or worn (see TM 9-2320-218-20-1-1).
			CAUTION If pinion and barrel assembly are accidentally rotated to fully extended locked position screw shaft, do not attempt to force it in reverse direction. It can be installed as is, and will be released when engine turns at proper speed to demesh detent pin in pinion.	
			b. Check drive spring (16) for cracks, breaks, and corrosion.	If spring (16) is cracked, broken, or corroded, replace assembly.
			c. Inspect dentil clutch teeth (15) for proper mesh in drive position.	If clutch teeth do not mesh properly, replace drive assembly (13).

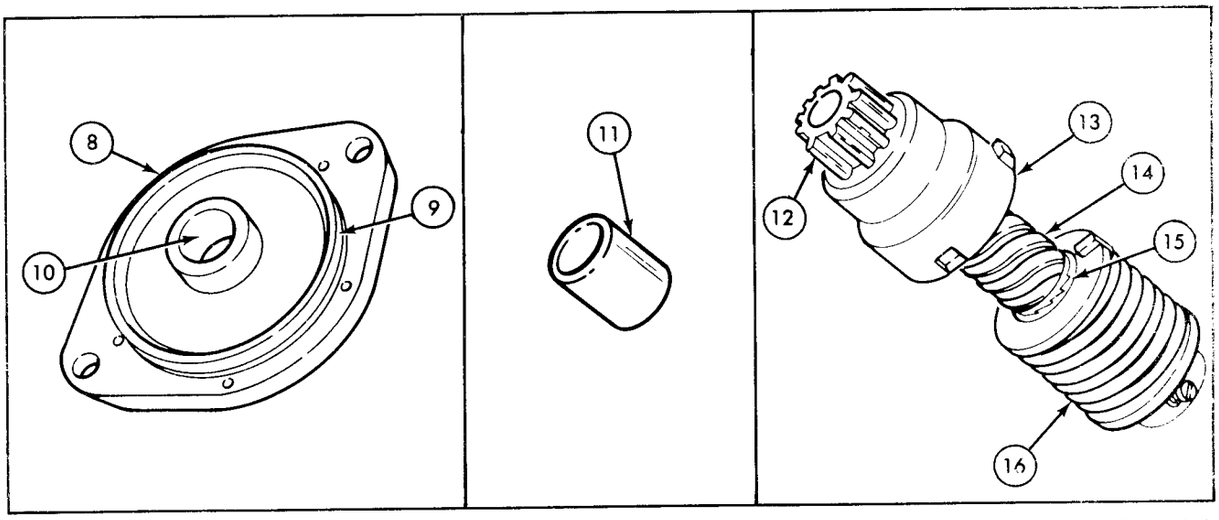

TA 156062

6-7. Starter Assembly Maintenance (Cont'd)

STEP NO.	LOCATION	ITEM	ACTION	REMARKS
40.		Two ground brush assemblies (2) and brush holders (1)	Install on brush plate (3) with four suitable rivets (4).	Be sure surfaces are clean to ensure good contact.
41.		Brush plate (3)	*a.* Install on commutator end head (5) with four screws (6).	Make sure locator tab is properly alined.
			CAUTION Do not put insulating varnish on brush contact surfaces, leads, or contact surfaces.	
			b. Apply insulating varnish to insulation, connections, and exposed metal.	Varnish should be dry before assembly.
42.		Four brush springs (7)	*a.* Install in brush plate (3).	

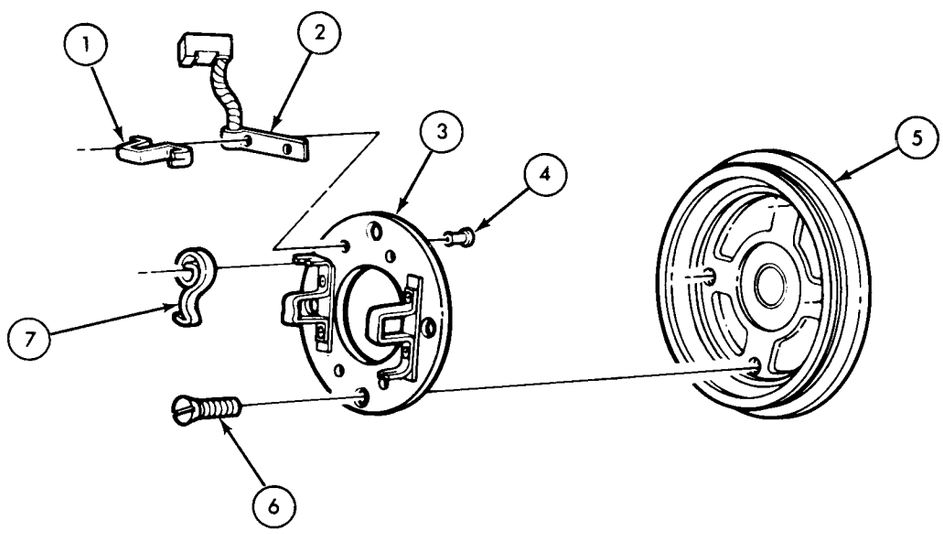

TA 156063

6-7. Starter Assembly Maintenance (Cont'd)

STEP NO.	LOCATION	ITEM	ACTION	REMARKS
			b. To check tension, place hook of spring tester (8) inside of brush holder (1) and under spring (7), then gently pull up.	Spring tester should indicate spring tension of 42-53 oz. (1.2-1.5 kg.)
			c. Adjust if necessary by bending at place where seated.	
		CAUTION Do not leave excess oil that could run to brushes.		
43.		Commutator end head assembly (5)	Lubricate bearing bore (9).	Use OE30 (mil grade 2104 or equivalent).

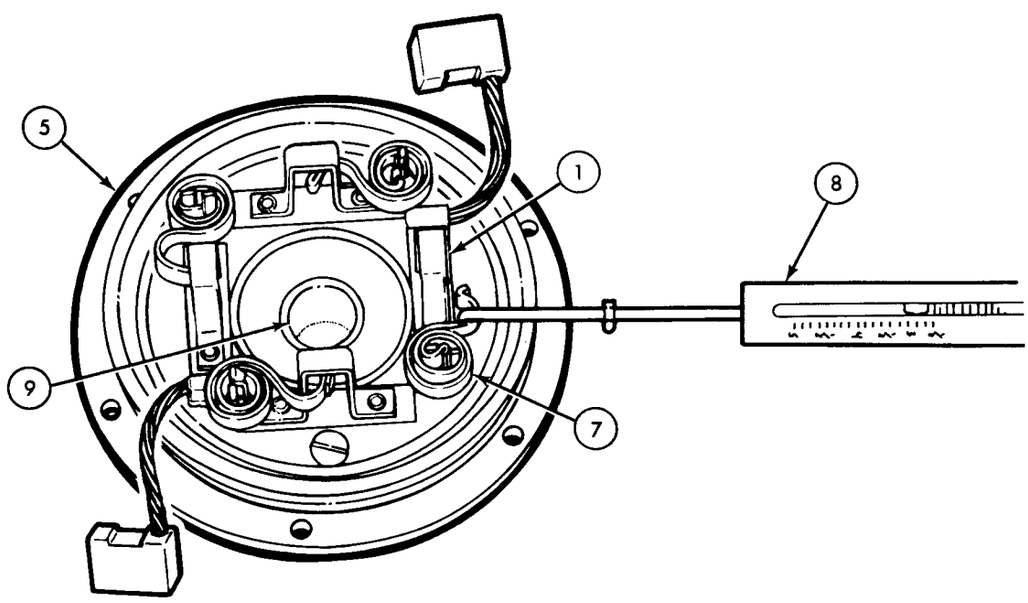

TA 156064

6-7. Starter Assembly Maintenance (Cont'd)

STEP NO.	LOCATION	ITEM	ACTION	REMARKS
44.		Armature (5)	Clamp in soft-jawed vice.	
45.		Thrust washer (3) and commutator end head assembly (2)	Install on commutator end of armature shaft (4).	
46.		Two ground brushes (1)	*a.* Install in commutator end head brush holders (6).	If brushes (1) are not in perfect alinement with commutator sections, or do not slide easily in brush holders (6) replace starter assembly.
			b. Check alinement with commutator sections.	
			c. Remove from commutator end head brush holders (6).	
47.		Commutator end head assembly (2) and thrust washer (3)	Remove from armature shaft (4).	

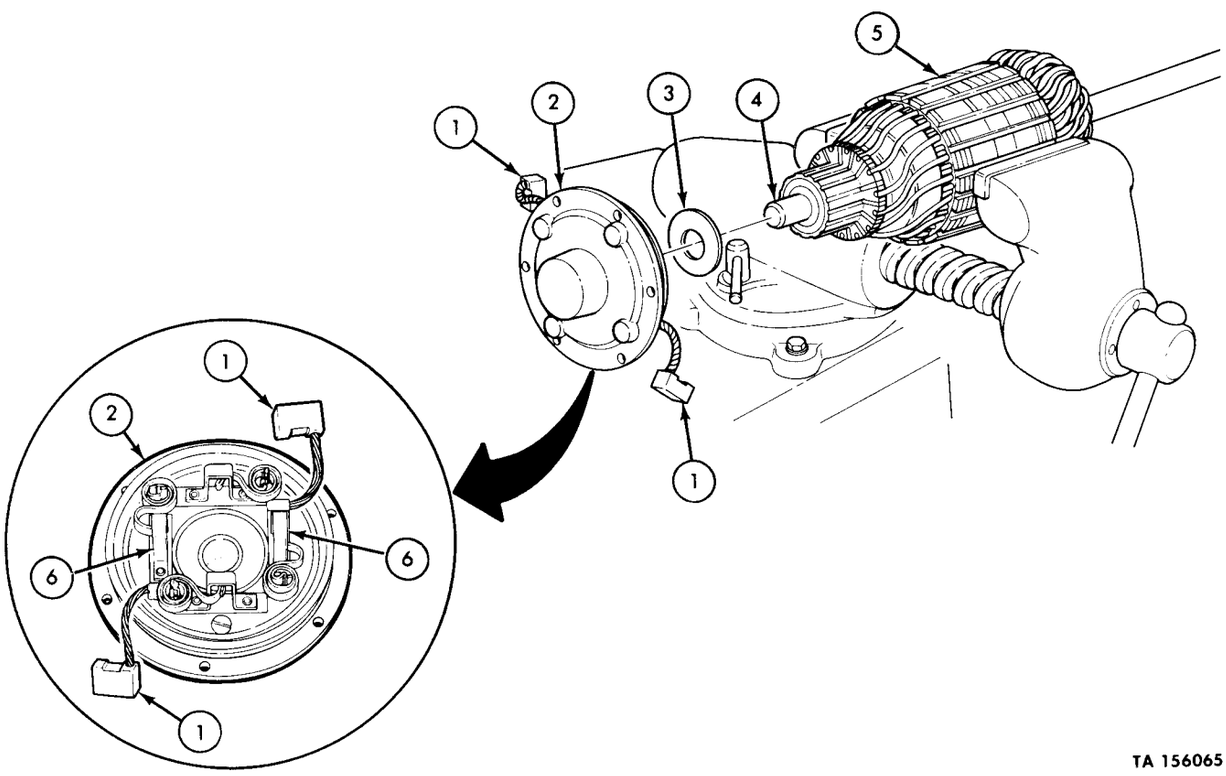

TA 156065

6-7. Starter Assembly Maintenance (Cont'd)

STEP NO.	LOCATION	ITEM	ACTION	REMARKS
d. REASSEMBLY				
48.		Drive end bearing (8)	Press onto drive end head (9).	Use arbor press.
49.		New "O" ring (10)	*a.* Install on drive end head (9).	
			b. Coat with GAA grease.	Wipe off excess grease.
50.		Drive end head (9)	*a.* Install on frame (11) and aline marks made at disassembly.	
			b. Secure to frame (11) with six screws and lockwashers (12).	

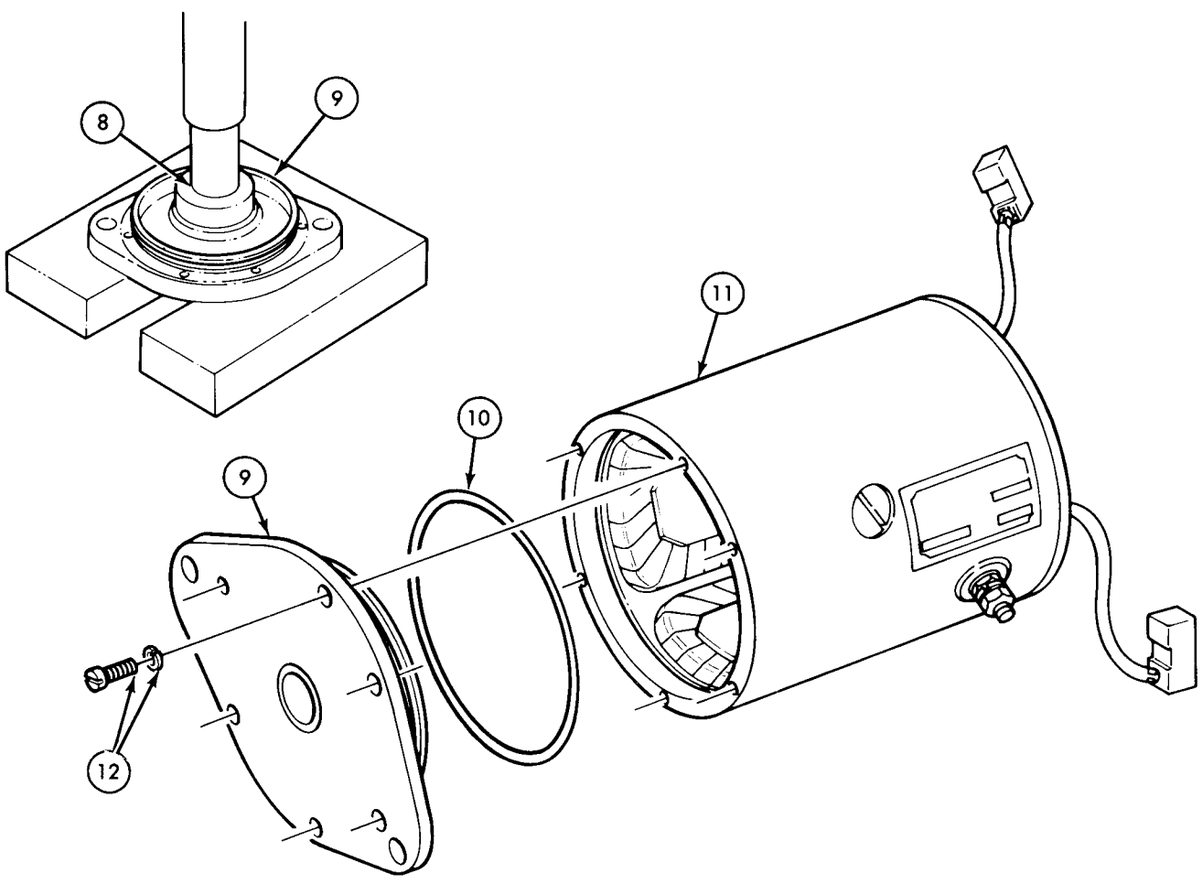

TA 156066

6-7. Starter Assembly Maintenance (Cont'd)

STEP NO.	LOCATION	ITEM	ACTION	REMARKS
51.		Long end of armature shaft (8)	Remove all nicks and burrs.	
52.		Thrust washer (2)	Install on long end of armature shaft (8).	Use 1/32 in. (.7937 mm) thick washer.
53.		Long end of armature shaft (8)	Insert into frame (1) and through drive end bearing.	Allow 1 to 2 in. (25-50 mm) of commutator (7) to extend out of frame (1).
54.		Thrust washer (5)	Install on short end of armature shaft (3).	
55.		New "O" ring (4)	*a.* Install on commutator end head (6).	
			b. Coat with GAA grease.	Wipe off excess grease.

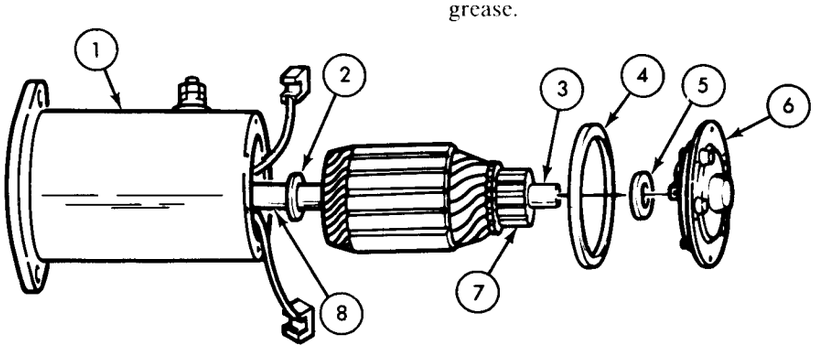

56.		Two ground brushes (11)	Install in brush holders (10), and side load as follows: *a.* Pull brush (11) to top of brush holder (10).	
			b. Tilt brush (11) away from spring (12).	Brush (11) will remain in this position.
57.		Two field brushes (9)	Install into brush holders (10) and repeat step 56 to side load.	
58.		Commutator end head assembly(6)	*a.* Place on short end of armature shaft (3).	
			b. Rotate on shaft (3) until locating tab (15) is 90° clockwise from terminal stud (14) and aline with scribe mark.	

TA 156067

6-7. Starter Assembly Maintenance (Cont'd)

STEP NO.	LOCATION	ITEM	ACTION	REMARKS
			c. Release brushes (9) and (11) to enter brush holder (10).	
59.		Two field brush leads (13)	Arrange so they will not touch armature.	
		NOTE		
		Make sure armature turns freely while securing head assembly.		
60.		Commutator end head assembly (6)	Secure to frame (1) with six screws and lock-washers (16).	

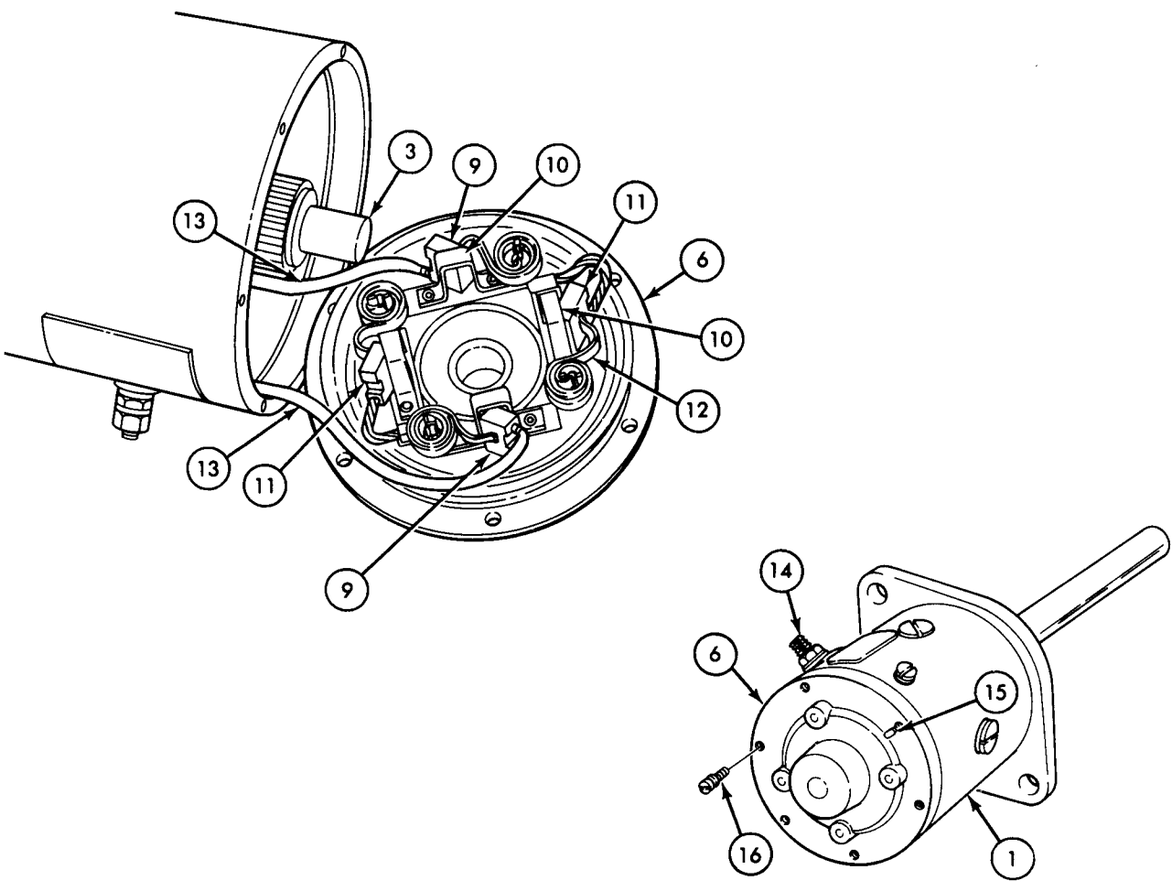

TA 156068

6-7. Starter Assembly Maintenance (Cont'd)

STEP NO.	LOCATION	ITEM	ACTION	REMARKS
e. ARMATURE END PLAY ADJUSTMENT				
61.		Armature drive shaft (4)	Push in toward frame (3) as far as it will go.	
62.		Dial indicator (1)	*a.* Install on drive end head (2) with contact point on end of shaft.	
			b. "Zero" indicator.	
63.		Armature drive shaft (4)	*a.* Pull out of frame (3) toward indicator (1) as far as it will go.	
			b. Note the amount of movement indicated.	Acceptable end play is .005-.030 in. (.127-.762 mm).
			c. If end play is within limits, go to end of task.	
			d. If end play is not within limits, go to step 64.	

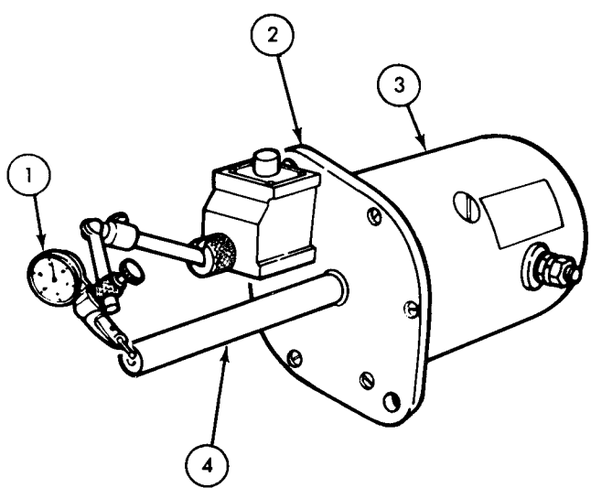

TA 156069

6-7. Starter Assembly Maintenance (Cont'd)

STEP NO.	LOCATION	ITEM	ACTION	REMARKS
64.	Commutator end head assembly (8) to frame (3)	Six screws and lock-washers (6)	Remove.	
65.		Armature drive shaft (4)	Tap with soft hammer until commutator end head (8) is approximately 2 in. (50 mm) from frame (3).	
66.	Commutator end head assembly (8)	Four brushes (5)	Pull to top of brush holder (7), and side load.	

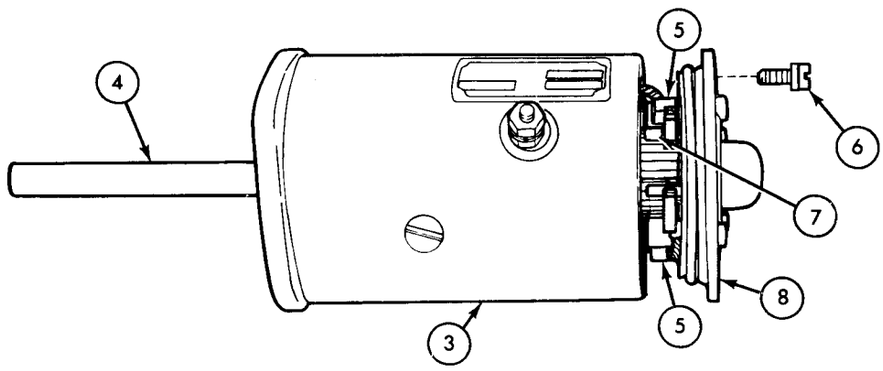

67.		Commutator end head assembly (8)	Pull off from armature shaft (10).	
68.		Commutator end thrust washer (9)	Add or remove as needed.	If end-play is more than .030 in. (.762 mm) add a washer (9). If end-play is less than .005 in. (.127 mm) use a thinner washer (9).

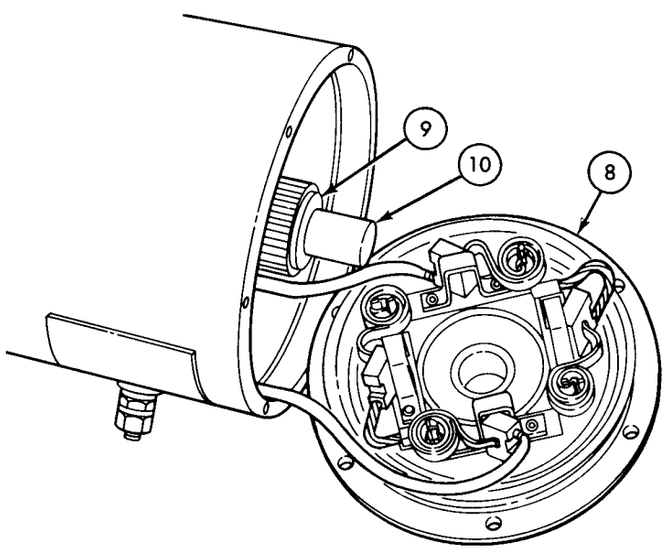

TA 156070

6-7. Starter Assembly Maintenance (Cont'd)

STEP NO.	LOCATION	ITEM	ACTION	REMARKS
		NOTE		
		Do not discard or replace any components during end-play adjustment.		
69.		Commutator end head assembly (2)	*a.* Place on armature shaft (1). *b.* Rotate on shaft (1) until locating tab (4) is 90° clockwise from terminal stud (3) and alined with scribe mark. *c.* Release brushes (10) to enter brush holder (9).	
70.		Two field brush leads (7)	Arrange so they will not touch armature (8).	
		NOTE		
		Make sure armature turns freely while securing head assembly.		
71.		Commutator end head assembly (2)	*a.* Secure to frame (6) with six screws and lockwashers (5). *b.* Repeat steps 66 through 68 until end play is within limits.	

6-7. Starter Assembly Maintenance (Cont'd)

STEP NO.	LOCATION	ITEM	ACTION	REMARKS

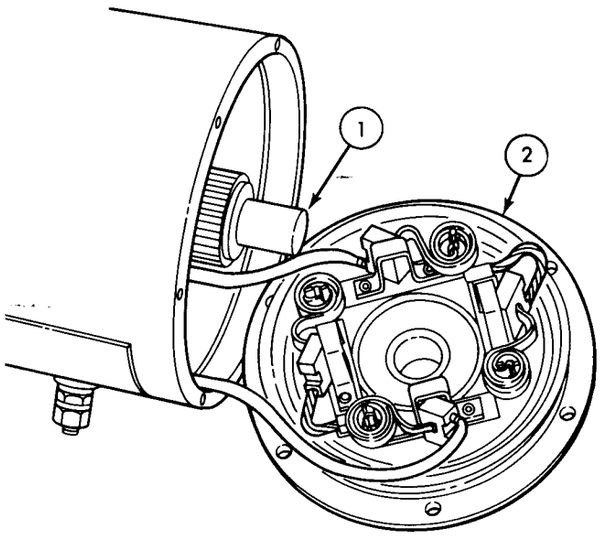

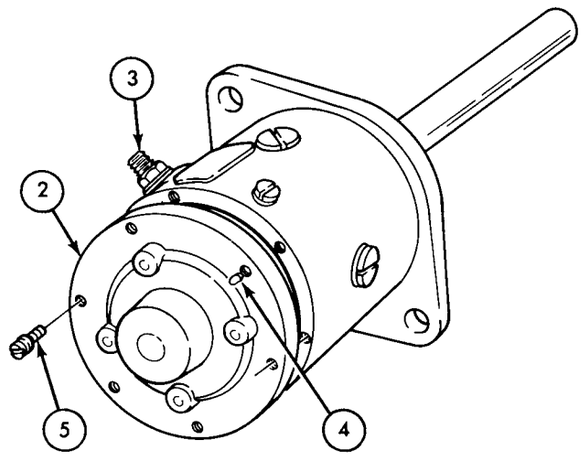

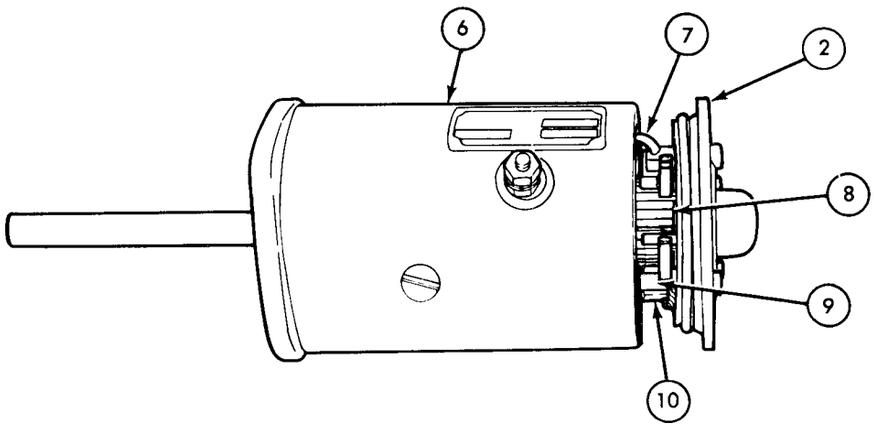

END OF TASK!

FOLLOW-ON TASKS:
- Perform starter no-load current test (para 6-8).
- Install pinion drive assembly (TM 9-2320-218-20-1-1).
- Install starter motor assembly in vehicle (TM 9-2320-218-20-1-1).

TA 156071

6-8. Starter No-Load Current Test

This task covers:

a. Low Voltage Circuit Tester Hookup *b. No-Load Current Test*

INITIAL SETUP:

Applicable Models
All

Equipment Condition

Reference	Condition Description
TM 9-2320-218-20-1-1	Starter assembly removed from vehicle.
TM 9-2320-218-20-1-1	Pinion drive assembly removed.

Test Equipment
Low voltage circuit tester
Jumper lead (power source to starter)

Special Tools
None

Special Environmental Conditions
None

Materials/Parts
None

Personnel Required
One mechanic

General Safety Instructions
None

Manual References
TM 9-2320-218-20

STEP NO.	LOCATION	ITEM	ACTION	REMARKS
		a. LOW VOLTAGE CIRCUIT TESTER HOOKUP		
1.	Low voltage circuit tester (5)	Load bank switch (6)	Place in OFF position.	
2.		Ammeter position red lead (3)	*a.* Connect small end to ammeter common post (4). *b.* Connect large end to 24 volts DC power source positive terminal (2).	
3.		Power source to starter jumper lead (11)	*a.* Connect one end to starter terminal post (10). *b.* Connect other end to 24 volts DC power source negative post (1).	

6-8. Starter No-Load Current Test (Cont'd)

STEP NO.	LOCATION	ITEM	ACTION	REMARKS
4.		Ammeter negative black lead (8)	*a.* Connect small end to ammeter 100 amp post (7). *b.* Connect large end to drive end head (9).	

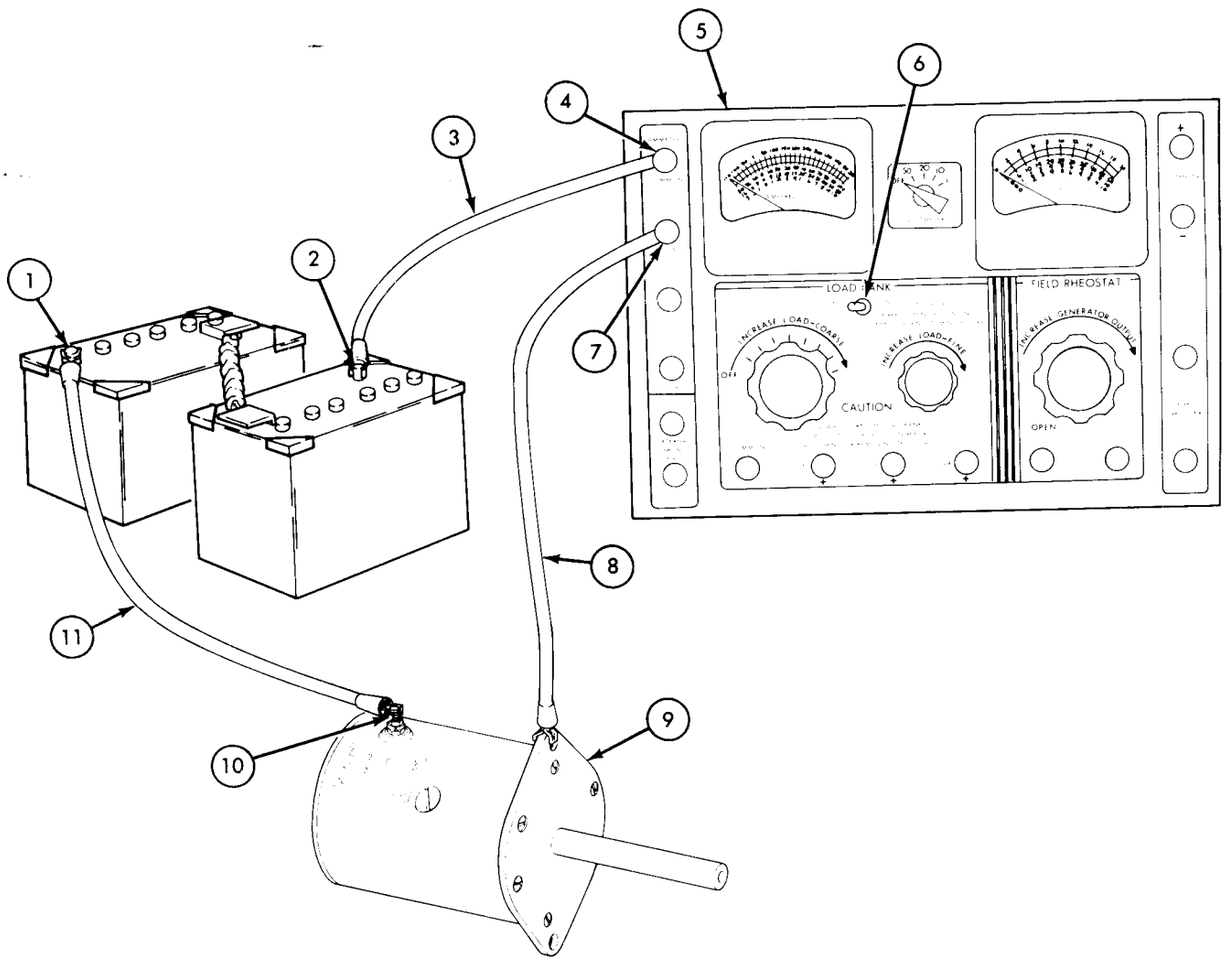

TA 156072

6-8. Starter No-Load Current Test (Cont'd)

STEP NO.	LOCATION	ITEM	ACTION	REMARKS
b. NO-LOAD CURRENT TEST				
		CAUTION • If ammeter needle pegs when load bank switch is engaged, a short exists and test should be discontinued immediately. • Do not continue current draw over 30 seconds to prevent equipment damage from heat buildup.		
5.		Low voltage circuit tester (1)	*a.* Place load bank switch (2) in ON position.	
			b. Read current draw.	Normal no-load current draw at 22 volts is 12 amps. If initial current surge is less than 50 amps, a more accurate reading may be obtained by connecting ammeter negative black lead (3) to 50 amps post of low voltage tester (1).
		NOTE • If high current condition exists: *a.* Check the armature for excessive arcing, grounds and shorts. (see para 6-7.) *b.* Inspect starter for armature drag. The cause could be loose pole shoe screws or armature out-of-round (see para 6-7). • If a low current condition exists, inspect the starter for faulty connections and poor brush contact (see para 6-7).		

6-8. Starter No-Load Current Test (Cont'd)

STEP NO.	LOCATION	ITEM	ACTION	REMARKS
6.	Low voltage circuit tester (1)	Load bank switch (2)	Place in OFF position and disconnect all leads.	

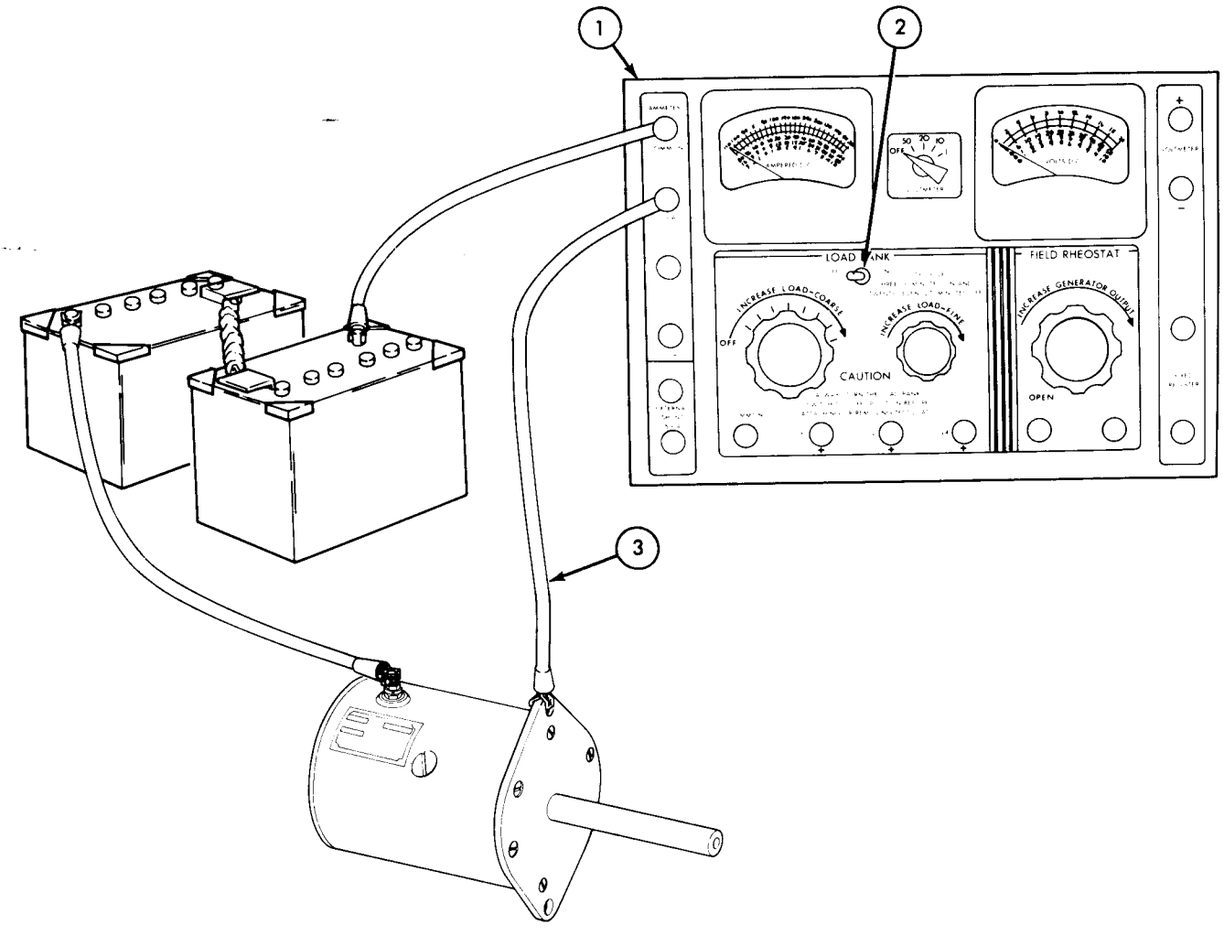

END OF TASK!

FOLLOW-ON TASKS:
- Install pinion drive assembly (TM 9-2320-218-20-1-1).
- Install starter assembly (TM 9-2320-218-20-1-1).

TA 156073

Section III. REPAIR AND REPLACEMENT STANDARDS

6-9. General

This section provides repair and replacement standards pertaining to direct and general support for the starter assembly. The repair and replacement standards included herein give minimum, maximum and key clearance of new or repaired parts. An asterisk (*) in the "wear limit" column indicates that a part should be replaced when worn beyond dimensions given in "size and fit of new parts" column. In the "size and fit of new parts" column, the letter "L" indicates a loose fit (clearance) the letter "T" indicates a tight fit (interference).

6-10. Repair and Replacement Standards — Starter Assembly

The components covered by the repair and replacement standard listed in table 6-2 are illustrated below. To find a component and its tolerance requirements, match the reference number listed to the extreme left in table 6-2.

Table 6-2. Repair and Replacement Standards — Starter Assembly

Ref. No.	Point of Measurement	Size and Fit of New Parts	Wear Limits
1.	Brush length	15/32 in. (11.91 mm)	5/16 in. (7.94 mm)
2.	Armature shaft diameter at commutator end head	0.6345-0.6375 in. (16.116-16.1925 mm)	0.6340 in. (16.104 mm)
3.	Armature shaft diameter at drive end bearing	0.6243-0.6250 in. (15.857-15.875 mm)	0.6230 in. (15.824 mm)
4.	Armature shaft diameter at flywheel pilot bearing	0.6243-0.6250 in. (15.857-15.875 mm)	0.6230 in. (15.824 mm)
5.	Armature shaft end play	0.005-0.030 in. (0.127-0.762 mm)	*
6.	Armature shaft run-out commutator out-of-round		0.003 in. (0.076 mm)
7.	Commutator diameter	1.562 in. (39.675 mm)	1.450 in. (36.83 mm)
8.	Commutator mica under cut	1/32-3/64 in. (0.79-1.19 mm)	*
9.	Commutator end head bearing inside diameter	0.6375-0.6385 in. (16.193-16.218 mm)	0.6430 in. (16.332 mm)
10.	Brush spring tension	42-53 oz (1.2-1.5 kg)	*
11.	Drive end head bearing inside diameter	0.626-0.627 in. (15.900-15.926 mm)	0.632 in. (16.053 mm)

6-10. Repair and Replacement Standards — Starter Assembly (Cont'd)

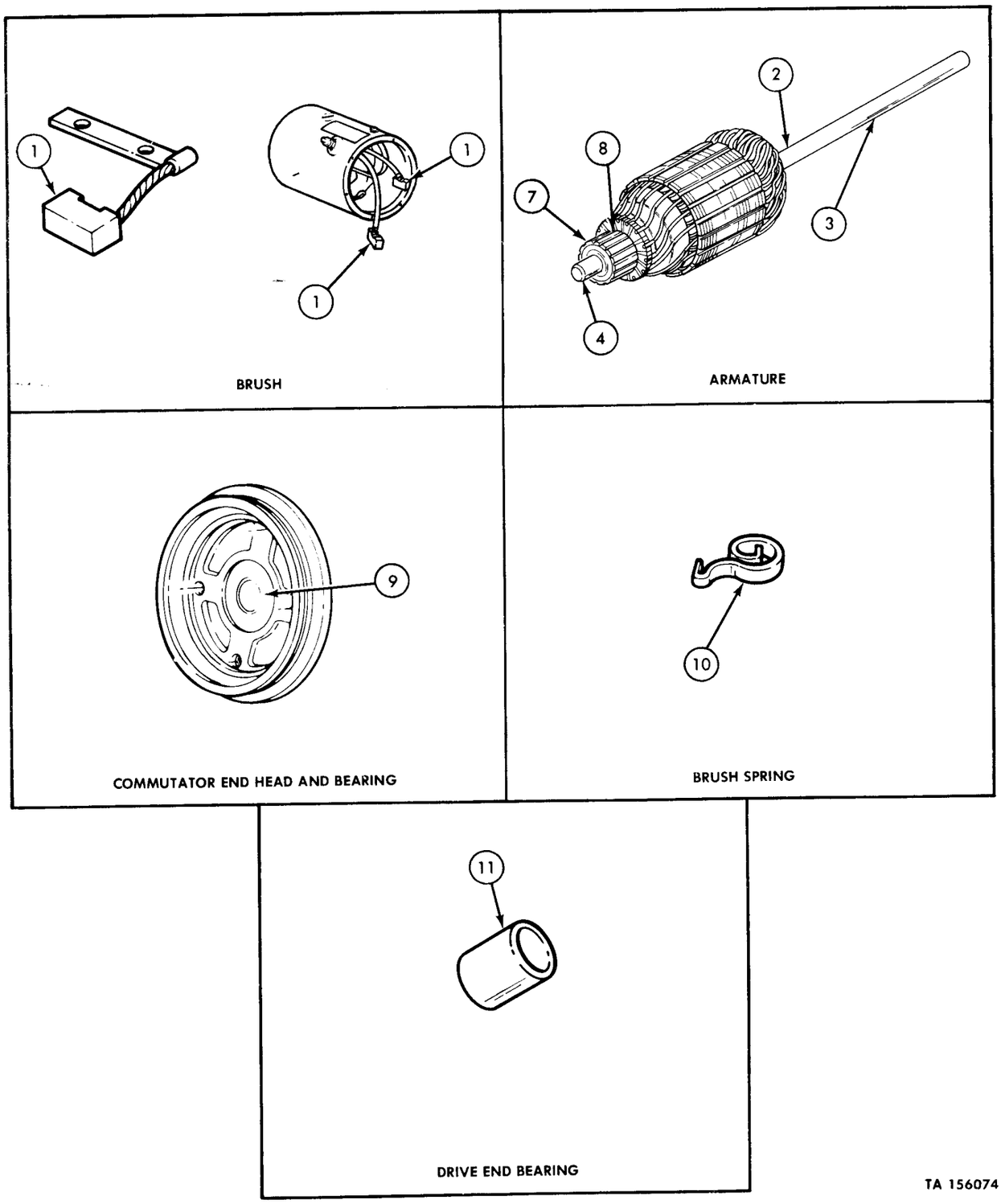

TA 156074

CHAPTER 7

TRANSMISSION/TRANSFER ASSEMBLY MAINTENANCE

7-1. Overview

a. This chapter provides maintenance of transmission/transfer components assigned to the direct support and general support levels. Each component and related information is covered in one of the following sections:

b. Maintenance sections III and IV are preceded by a list that provides a breakdown of the procedures covered in that section and also provides a paragraph and page number leading you to each task.

Section I. DESCRIPTION AND DATA

7-2. General

This section provides description and data for the transmission/transfer.

7-3. Description — Transmission/Transfer

a. The four-speed constant-mesh transmission provides for a syncro-silent action in second, third, and fourth speeds. All gears are of the helical type except first and reverse. The transmission case is made of cast iron. The gearshift housing is attached to the top of the transmission.

b. A standard H-type commercial gearshift pattern is used plus the addition of the fourth forward speed. The gears within the transmission are shifted by the gearshift lever that extends from the gearshift housing into the driver's compartment. The gearshift and housing are sealed by a rubber boot to prevent water from entering the transmission.

c. A pressure-type breather valve is located at the base of the gearshift housing. A lubricant filler plug is provided on the left side of the transmission case for filling both the transmission and transfer case. Separate drain plugs are provided and are located at the bottom of each case.

d. The transfer case is a one-piece cast-iron housing, doweled, and attached to the rear face of the transmission case. Transfer gears are directly on the vertical center line of the vehicle. The transfer input gear, transfer intermediate gear, and transfer output gear are of the constant mesh helical type. The transmission case and transfer case are machined in matched sets.

e. The speedometer drive gear and parking brakedrum are mounted behind the transfer input gear and are secured to the transmission output shaft. The rear end of the transmission output shaft is supported by a caged needle bearing mounted in the transfer case. A double-lip type oil seal prevents oil leakage past the hub of the parking brakedrum.

7-3. Description—Transmission/Transfer (Cont'd)

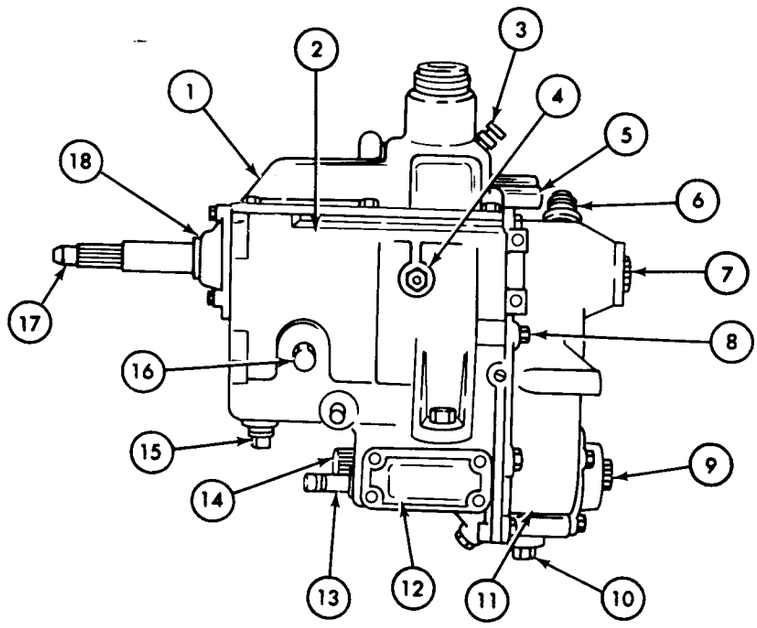

1. Gearshift housing
2. Transmission
3. Vent valve
4. Low and reverse shifter arm pivot
5. Shifter shafts
6. Speedometer bearing and gear
7. Transfer case retaining bolts
8. Transfer input shaft
9. Transfer rear output shaft
10. Transfer drain plug
11. Transfer case
12. Transfer shift cover plate
13. Transfer shifter shaft
14. Transfer front output shaft
15. Transmission drain plug
16. Transmission fill plug
17. Input shaft
18. Input shaft retainer

TA 156229

7-4. Data

Tabulated data for the transmission/transfer assembly is covered in table 7-1 below:

Table 7-1. Tabulated Data — Transmission/Transfer Assembly

a. General

Make	Ordnance
Type	Selective syncromesh
Speeds	4 forward, 1 reverse
Synchronized	2nd, 3rd, 4th
Lubricant capacity (transmission/transfer)	5.5 pt(2.6 l)

b. Gear Ratios

First	5.712 - 1.000
Second	3.179 - 1.000
Third	1.674 - 1.000
Fourth	1.000 - 1.000
Reverse	7.497 - 1.000
Transfer	1.000 - 1.000

c. Bearing Types — Transmission

Output shaft — rear	Ball and roller bearing
Output shaft — pilot	Needle roller
Cluster gear	Needle roller
Reverse gear	Bushing

d. Bearing Types — Transfer

Intermediate gear	Needle roller
Front output shaft:	
Front bearing	Ball
Rear bearing	Bushing
Rear output shaft:	
Front bearing	Roller
Rear bearing	Ball

Section II. GENERAL TRANSMISSION/TRANSFER CLEANING, INSPECTION, AND REPAIR

7-5. General

This section provides cleaning, inspection, and repair procedures assigned to direct support and general support levels for the transmission transfer assembly.

7-6. General Cleaning Recommendations

a. When the transmission transfer is contaminated with dirt or other foreign and abrasive matter, unnecessary wear will result. Inspect all parts for abrasive material when a unit is disassembled. The metallic contamination of oil is evidence of failure of some part in the assembly. If metal particles are found, the entire assembly containing the contaminated lubricant must be thoroughly cleaned.

WARNING

Drycleaning solvent is flammable and will not be used near an open flame. A fire extinguisher will be kept nearby when the solvent is used. Use only in well-ventilated places. Failure to do this may result in injury to personnel and/or damage to equipment.

b. Clean thoroughly all metallic parts of transmission/transfer assembly, except bearings and seals, with drycleaning solvent or steam.

WARNING

- Do not use caustic soda for steam cleaning due to the danger to personnel.
- Compressed air source will not exceed 30 psi. When cleaning with compressed air, eyeshields must be worn. Failure to wear eyeshields may result in injury to the eyes and loss of sight.

c. Dry all parts using compressed air. Oil steam-cleaned parts immediately after drying.

d. After cleaning, examine all parts thoroughly and especially all oil passages to make sure they are entirely clean.

e. Refer to TM 9-214 for care and maintenance of bearings.

7-7. Inspection and Repair Recommendations

This task covers:

Inspection and Repair

INITIAL SETUP:

Applicable Models	Equipment Condition Reference	Condition Description
All		None.

Test Equipment

None

Special Tools

Safety goggles

Materials/Parts

Crocus cloth
Drycleaning solvent

Personnel Required

One mechanic

Manual References

TM 9-2320-218-34P

Special Environmental Conditions

Clean, well-ventilated work area.

General Safety Instructions

- Use eye protection when working with compressed air.
- Keep fire extinguisher nearby when using drycleaning solvent.

STEP NO.	LOCATION	ITEM	ACTION	REMARKS
	INSPECTION AND REPAIR			
1.	Cast parts and machined surfaces	Bores	Inspect for cracks, wear, grooves, scratches, and dirt.	Replace parts that are cracked, deeply grooved, scratched, or worn (see tables 7-2 and 7-3 for wear limits).

WARNING

Drycleaning solvent is flammable and will not be used near an open flame. A fire extinguisher will be kept nearby when the solvent is used. Use only in well-ventilated places. Failure to do this may result in injury to personnel and/or damage to equipment.

7-7. Inspection and Repair Recommendations (Cont'd)

STEP NO.	LOCATION	ITEM	ACTION	REMARKS
			WARNING Compressed air source will not exceed 30 psi. When cleaning with compressed air, eyeshields must be worn. Failure to wear eyeshields may result in injury to the eyes and loss of sight.	
2.		Oil passages	*a.* Inspect for obstructions.	
			b. Remove obstructions with compressed air or by working a wire through the passage.	
			c. Flush with drycleaning solvent.	Dry with compressed air.
3.		Mounting faces	*a.* Inspect for nicks, burrs, scratches, and foreign material.	
			b. Remove minor nicks, burrs, scratches, and foreign material using crocus cloth or soft stone.	Replace if scratches or nicks are deep.
4.		Tapped holes	*a.* Inspect for damaged threads.	
			b. Chase damaged threads with a correct size tap.	Replace part if thread cannot be repaired.
5.		Cases and cast parts	Check for breakage.	Replace broken cases and cast parts.
6.		Machined surfaces	Check for distortion.	Repair or replace distorted parts.

7-7. Inspection and Repair Recommendations (Cont'd)

STEP NO.	LOCATION	ITEM	ACTION	REMARKS
7.		Ball and roller type bearings	*a.* Inspect for roughness during rotation.	After cleaning and oiling, replace bearing if still rough during rotation.
			b. Inspect for scored, pitted, scratched, cracked, or chipped races, balls, and rollers.	Replace bearings if races, balls, or rollers are scored, pitted, scratched, cracked, or chipped.
			c. Check for excessive wear of rollers and balls.	Replace bearings if races, balls, or rollers are damaged or worn (see tables 7-2 and 7-3 for wear limits).
8.		Bearing bore and shaft	Check for grooved, burred, and rough condition.	Repair using crocus cloth. Replace parts not repairable.
		CAUTION When cutting out a damaged bushing use care not to damage the bore in which bushing fits.		
9.		Bushing type bearings	*a.* Inspect for roughness, scores, burrs, sharp edges, and evidence of overheating.	Replace bushing if out-of-round, deeply scored, or worn (see tables 7-2 and 7-3 for wear limits).
			b. Remove scores with crocus cloth.	
			c. Remove burrs and sharp edges with scraper or knife blade.	
10.		Thrust washers	Inspect for distortion, scores, burrs, and wear.	Replace thrust washers if distorted, scored, burred, or worn (see tables 7-2 and 7-3 for wear limits).
11.		Seal surfaces	Inspect surfaces for grooves.	Replace part if grooving is deeper than .0003 in. (0.076 mm).

7-7. Inspection and Repair Recommendations (Cont'd)

STEP NO.	LOCATION	ITEM	ACTION	REMARKS
12.		Gears	*a.* Inspect for scuffed, nicked, burred, broken, and worn teeth.	Remove defects with soft stone. If defect cannot be removed with soft stone or is worn, replace gear (see tables 7-2 and 7-3 for wear).
			b. Inspect thrust faces for scores, scratches, and burrs.	Remove defects with soft stone. If defects cannot be removed, replace gear.
13.		Splined parts	Inspect for stripped, twisted, chipped, and burred splines.	Remove burrs with soft stone. Replace part if splines are stripped, twisted, chipped, or burrs cannot be removed.

NOTE

Wear on splines, such as used on drive shafts, is not considered critical, since such splines are made with long contact surfaces designed to slide back and forth under all conditions. However, wear on short splines, such as drive flanges, must be at a minimum, since a spline used in the application is stronger than a keyway. The strength is lost if fit is loose.

14.		Threaded parts	Inspect for damaged threads.	Chase damaged threads with tap of die. Replace if threads cannot be repaired.

NOTE

- Snaprings must be replaced, since they are difficult to remove without distorting.
- Snaprings, controlling shaft end play, must be replaced.

7-7. Inspection and Repair Recommendations (Cont'd)

STEP NO.	LOCATION	ITEM	ACTION	REMARKS
15.		Springs	Inspect for overheating, stretch, permanent set, broken coils, distorted coils, loss of compression, and wear.	Replace spring if overheated, stretched, permanent set, coils broken, coils distorted, compression lost, or worn.

END OF TASK!

Section III. TRANSFER MAINTENANCE

7-8. General

This section provides maintenance procedures assigned to direct support and general support levels for the transfer assembly. To locate a specific procedure within this section, see the transfer maintenance task summary below:

7-9. Transfer Maintenance Task Summary

7-10. Transmission/Transfer Assembly on Repair Stand

This task covers:

a. Installation *b. Removal*

INITIAL SETUP:

Applicable Models
All

Equipment Condition Reference
Para 2-11
Para 2-12

Condition Description
Power plant removed from vehicle.
Transmission/transfer assembly removed from engine.

Test Equipment
None

Special Tools
Repair stand
Transmission holding fixture (see appendix D)

Special Environmental Conditions
Clean, well-ventilated work area.

Materials/Parts
None

Personnel Required
One mechanic
One assistant

General Safety Instructions
Transmission transfer assembly is heavy and can cause injury if dropped.

Manual References
None

STEP NO.	LOCATION	ITEM	ACTION	REMARKS
a. INSTALLATION				
1.		Transmission holding fixture (2)	Secure to repair stand (1) with four capscrews (3) and nuts (4).	
		WARNING Transmission/transfer assembly is very heavy and can cause severe injury to personnel and damage to equipment if dropped. Assistant will help lift and support assembly during step 2.		
2.		Transmission/transfer assembly (7)	Mount on holding fixture (2) with two capscrews (6) and nuts (5).	

7-10. Transmission/Transfer Assembly on Repair Stand (Cont'd)

STEP NO.	LOCATION	ITEM	ACTION	REMARKS
	b. REMOVAL			
		NOTE Assistant will help support transmission transfer assembly during steps 3 and 4.		
3.	Transmission/transfer assembly (7) to holding fixture (2)	Two capscrews (6) and nuts (5)	Remove.	
4.		Transmission/transfer assembly (7)	Remove from holding fixture (2).	
5.	Transmission holding fixture (2) to repair stand (1)	Four capscrews (3) and nuts (4)	Remove.	
6.		Transmission holding fixture (2)	Remove from repair stand (1).	

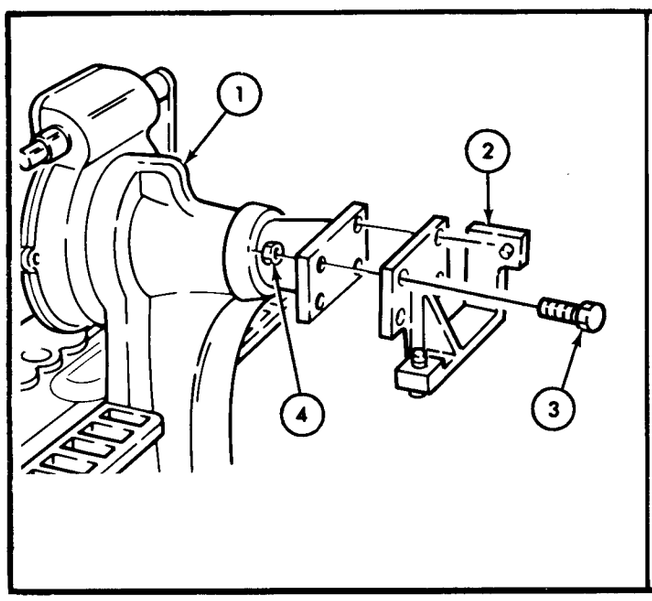

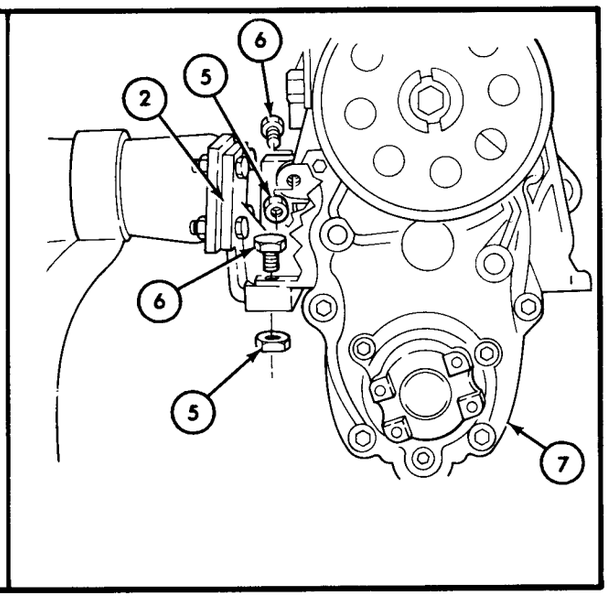

END OF TASK!

FOLLOW-ON TASKS:
- Install transmission/transfer assembly to engine (para 2-12).
- Install power plant in vehicle (para 2-11).

TA 156230

7-11. Transmission/Transfer Separation

This task covers:

Separation

INITIAL SETUP:

Applicable Models	Equipment Condition Reference	Condition Description
All	Para 7-10	Transmission/transfer assembly mounted on repair stand.

Test Equipment
None

Special Tools
None

Special Environmental Conditions
Clean, well-ventilated work area.

Materials/Parts
None

Personnel Required
One mechanic

General Safety Instructions
None

Manual References
TM 9-2320-218-20-1-2
TM 9-2320-218-34P

STEP NO.	LOCATION	ITEM	ACTION	REMARKS

CAUTION

Before separating transmission/transfer assembly, thoroughly clean exterior to avoid getting dirt inside.

NOTE

Some replacement parts of the transmission transfer assembly can be obtained only in kits. If after inspection, a part needs replacement, see TM 9-2320-218-34P

SEPARATION

1.	Top of transfer case (1)	Speedometer driven gear bearing and seal assembly (3) and driven gear (2)	Remove.	

7-11. Transmission/Transfer Separation (Cont'd)

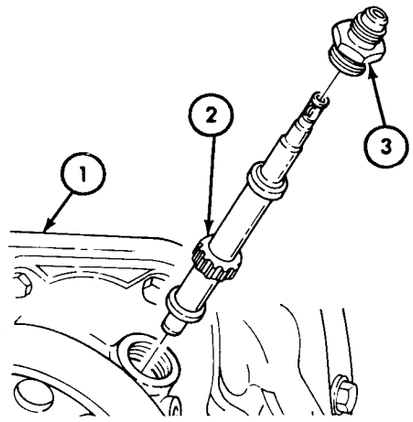

STEP NO.	LOCATION	ITEM	ACTION	REMARKS
2.	Parking brake band assembly (4) to transfer (1)	Adjusting spring (7)	Unhook and remove.	
3.	Band support (6) to transfer (1)	Two capscrew-assembled lockwashers (5)	Remove.	Discard capscrew-assembled lockwashers (5).
4.		Band support (6)	Remove from transfer (1).	
5.	Parking brake band assembly (4) to transfer (1)	Two capscrews (9) and lockwashers (8)	Remove.	Discard lockwashers (8).
6.		Parking brake band assembly (4)	Remove from transfer (1).	

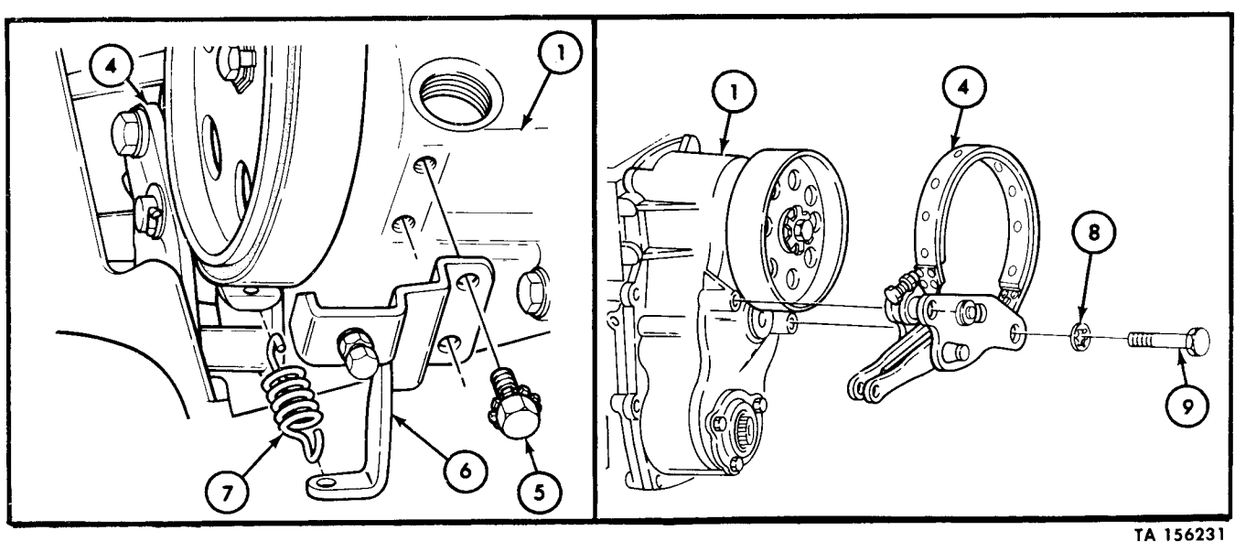

TA 156231

7-11. Transmission/Transfer Separation (Cont'd)

STEP NO.	LOCATION	ITEM	ACTION	REMARKS
7.	Parking brakedrum (3)	Tab washer (5)	Bend tabs away from capscrew (6).	
8.	Parking brakedrum (3) to transmission output shaft (2)	Capscrew (6), tab washer (5), and flat washer (4)	Remove.	Discard tab washer (5).
9.		Parking brakedrum (3)	Slide from transmission output shaft (2).	
10.	Rear output shaft (12)	Two companion flanges (7)	Remove.	
11.	Rear output shaft retainer (10) to transfer case (1)	Three capscrews (8) and lockwashers (9)	Remove.	Discard lockwashers (9).
12.		Output shaft retainer (10) and gasket (11)	Remove from transfer case (1).	Discard gasket (11).

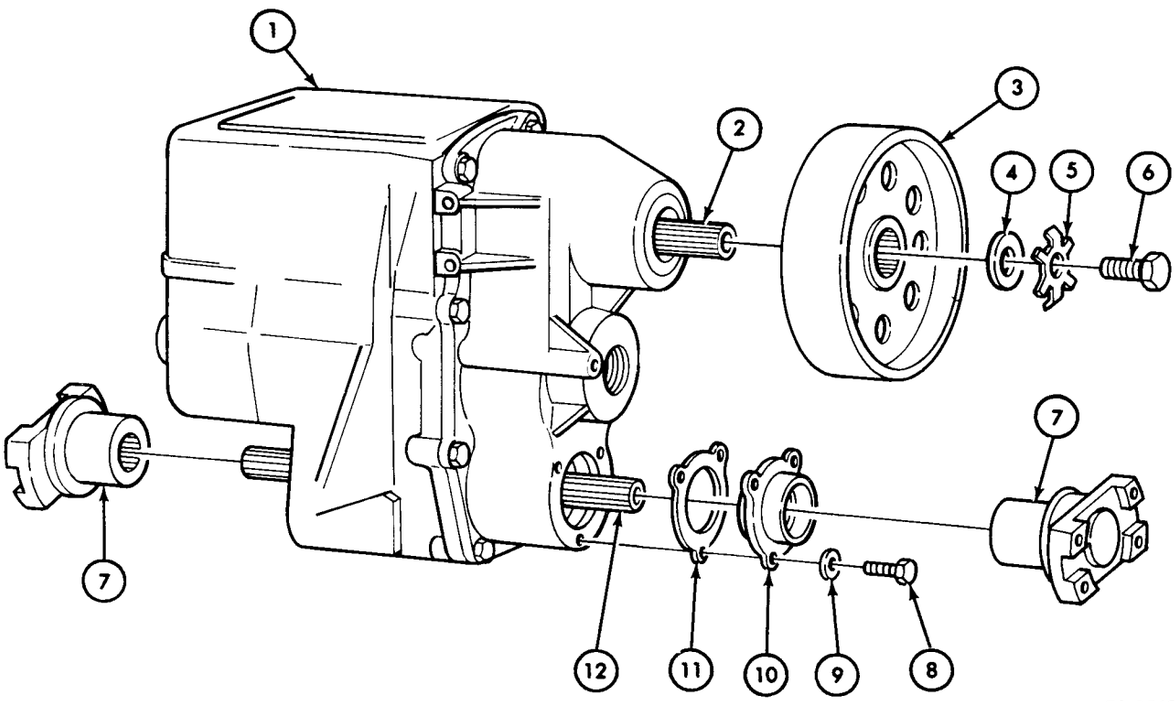

TA 156232

7-11. Transmission/Transfer Separation (Cont'd)

STEP NO.	LOCATION	ITEM	ACTION	REMARKS
13.	Transfer case (1) to transmission case (13)	Eight capscrews (16) and lockwashers (15)	Remove.	Discard lockwashers (15).
		NOTE If transfer case (1) will not separate from transmission (13), it may be necessary to tap on front output shaft.		
14.		Transfer case (1) and gasket (14)	Remove from transmission case (13).	Discard gasket (14).
		NOTE Transmission (13) and transfer (1) cases are machine matched and must remain as a matched set.		
15.	Transmission case (13)	Intermediate gear thrust washer (17)	Remove.	Discard thrust washer (17).

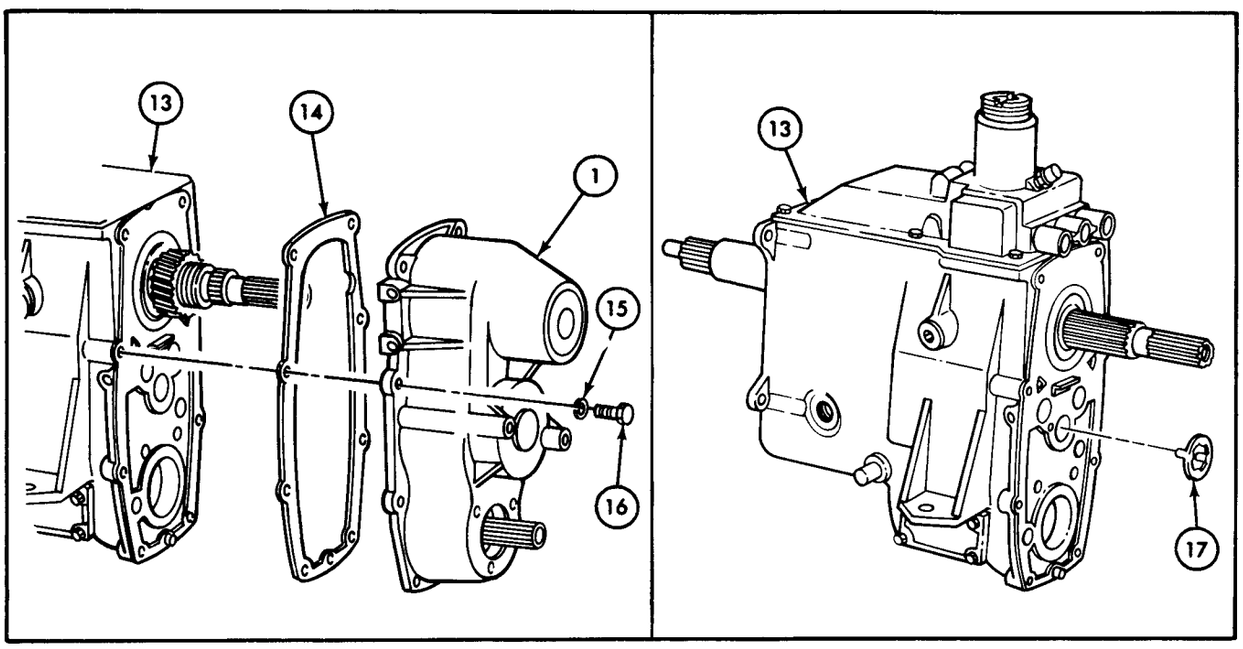

TA 156233

END OF TASK!

7-12. Transfer Repair

This task covers:

a. Disassembly
b. Cleaning, Inspection, and Repair
c. Reassembly

INITIAL SETUP:

Applicable Models	Equipment Condition Reference	Condition Description
All	Para 7-11	Transfer separated from transmission.

Test Equipment

None

Special Tools

Snapring alining tool
Driver tool
Slide hammer
Arbor press
Mechanical puller
3/16 in. drill bit

Special Environmental Conditions

Clean, well-ventilated work area.

Materials/Parts

Sealing compound (NSN 8030-00-252-3391)
Three bearing spacers
Two snaprings
Two seals
Two rivets
Thrust washer
Roller bearing
GO 80-90 lubricant
GAA grease
Drycleaning solvent
Repair kits (see note)
Two wear sleeves

Personnel Required

One mechanic
One assistant

General Safety Instructions

None

Manual References

TM 9-2320-218-34P

STEP NO.	LOCATION	ITEM	ACTION	REMARKS

NOTE

Some replacement parts of the transmission transfer assembly can be obtained only in kits. If after inspection, a part needs replacement, see TM 9-2320-218-34P.

7-12. Transfer Repair (Cont'd)

STEP NO.	LOCATION	ITEM	ACTION	REMARKS
a. DISASSEMBLY				
1.	Intermediate gear (1) and intermediate gear shaft (2)	Forty-four intermediate gear and shaft bearing rollers (3) and three bearing spacers (4)	Remove.	Discard spacers (4).
2.	Rear output shaft (5)	Roller retainer (8), snapring (7), and selective spacer (6)	Remove.	Use puller for retainer (8). Use snapring pliers. Discard snapring (7).

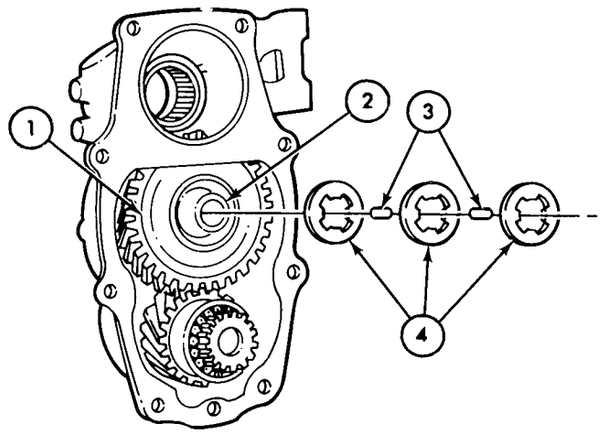

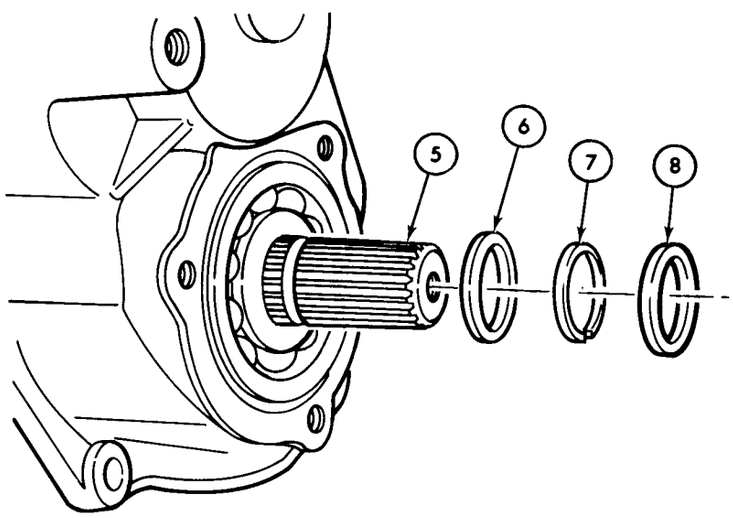

TA 156234

7-12. Transfer Repair (Cont'd)

STEP NO.	LOCATION	ITEM	ACTION	REMARKS
3.	Output shaft rear bearing (5)	Rear output shaft (4)	*a.* Mount transfer case (6) in arbor press (1).	
			b. Place protector block (3) between output shaft (4) and arbor press ram (2).	
			c. Press output shaft (4) from rear bearing (5).	

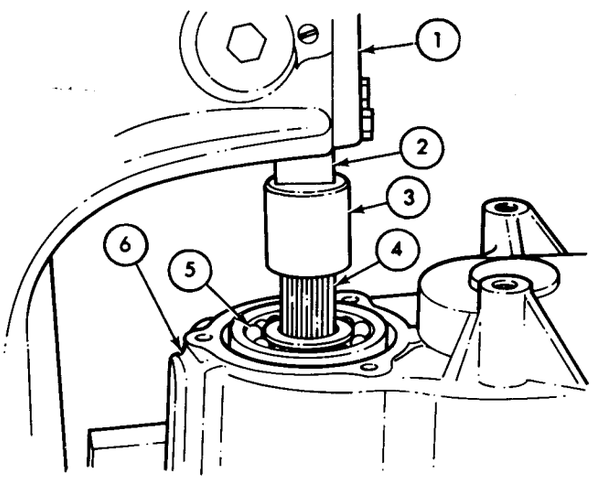

4.		Output shaft gear (8)	Slide from shaft (4).	
5.		Sleeve (7)	Pull out of shaft (4).	Use slide hammer puller (9).

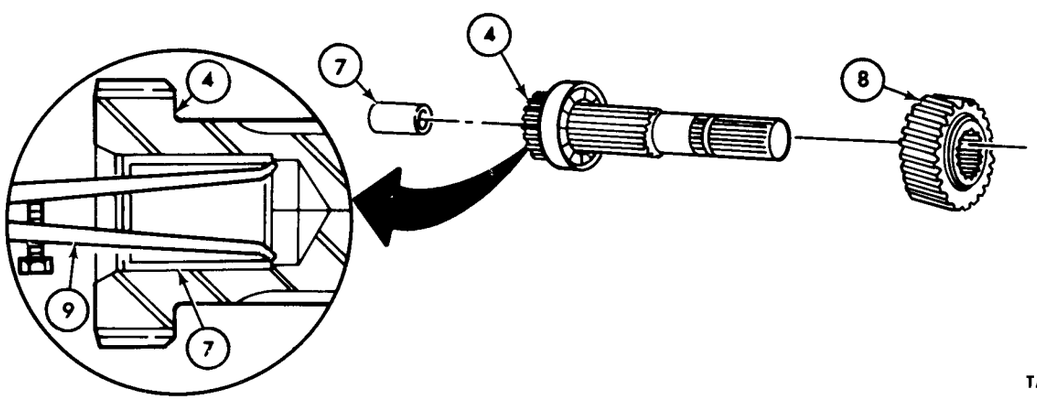

TA 156235

7-12. Transfer Repair (Cont'd)

STEP NO.	LOCATION	ITEM	ACTION	REMARKS
6.		Output shaft (4) and output shaft front bearing (10)	*a.* Place in arbor press (1).	
			b. Place protector block (3) between output shaft (4) and press ram (2).	
			c. Press output shaft (4) from front bearing (10).	

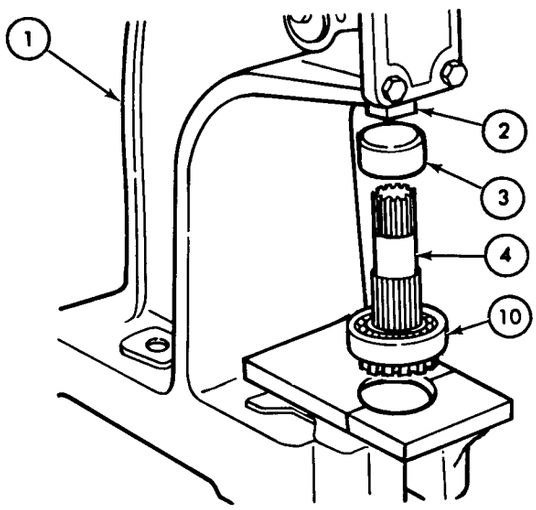

TA 156236

7-12. Transfer Repair (Cont'd)

STEP NO.	LOCATION	ITEM	ACTION	REMARKS
7.	Transfer case (5)	Intermediate gear shaft (4)	*a.* Position transfer case (5) in arbor press (1).	
			b. Place protector block (3) between gear shaft (4) and press ram (2).	
			c. Press intermediate gear shaft (4) from case (5).	
			d. Remove intermediate gear shaft (4) from transfer case (5) and intermediate gear (6).	Make sure that intermediate gear (6) is clear of locating pin (7) on intermediate shaft (4).

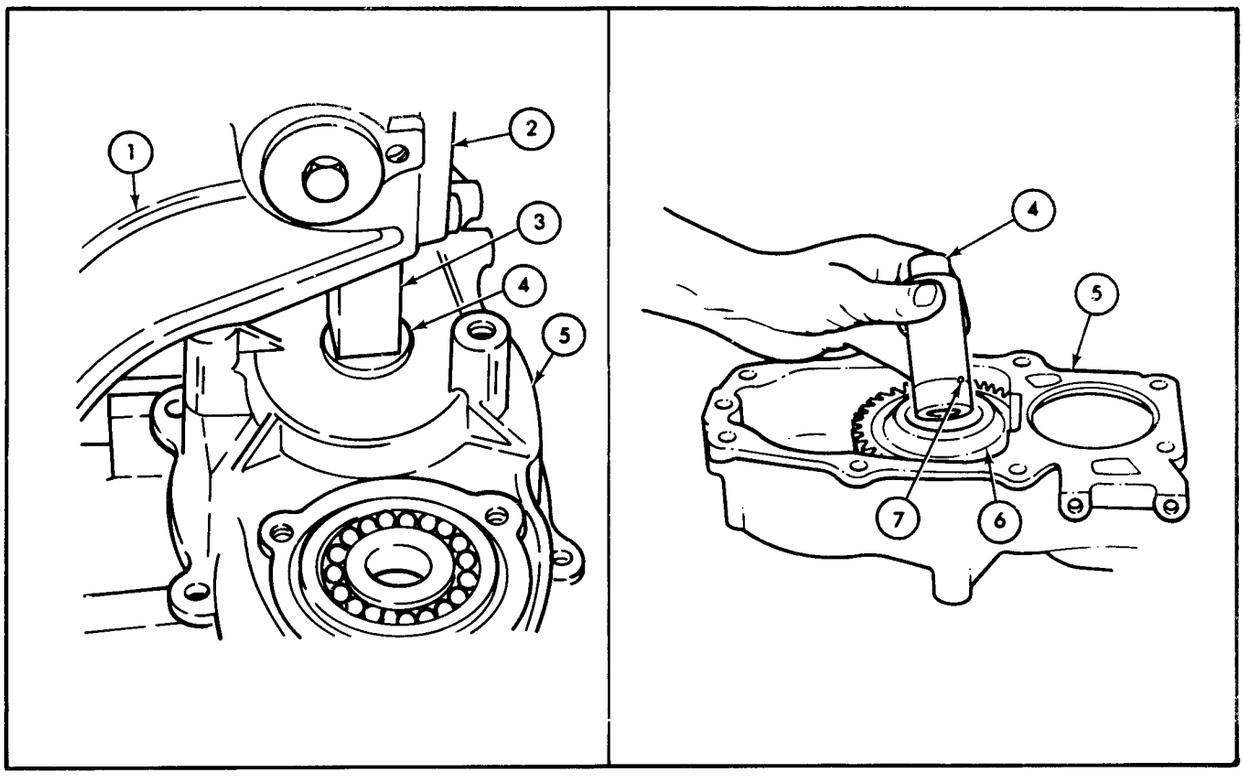

TA 156237

7-12. Transfer Repair (Cont'd)

STEP NO.	LOCATION	ITEM	ACTION	REMARKS
8.		Output shaft rear bearing (8)	*a.* Place transfer case (5) in arbor press (1). *b.* Press bearing (8) from transfer case (5).	

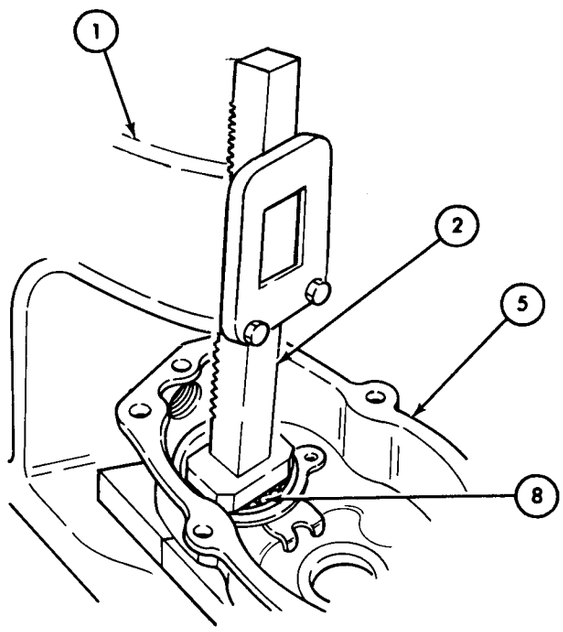

9.	Rear bearing (8)	Snapring (9)	Remove.	Use snapring pliers. Discard snapring (9).

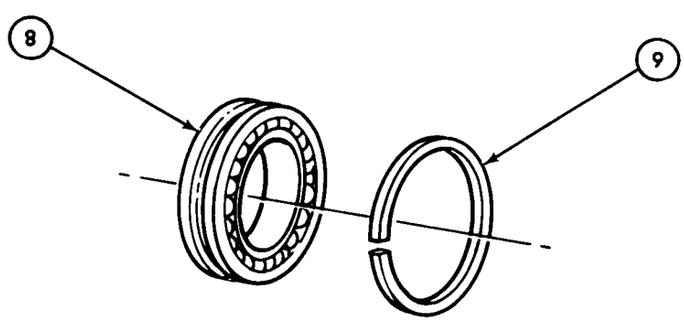

TA 156238

7-12. Transfer Repair (Cont'd)

STEP NO.	LOCATION	ITEM	ACTION	REMARKS
10.		Parking brakedrum seal (1)	Using a slide hammer puller (2), pull seal (1) from transfer case (3).	Discard seal (1).

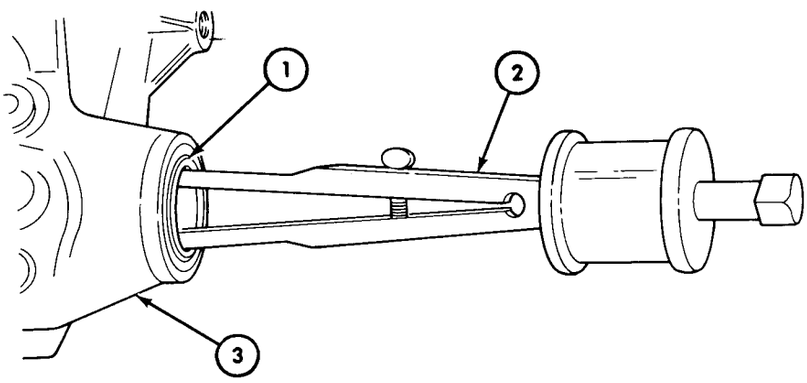

11.		Roller bearing (4)	Using driver (5), drive out roller bearing (4) from transfer case (3).	Discard roller bearing (4).

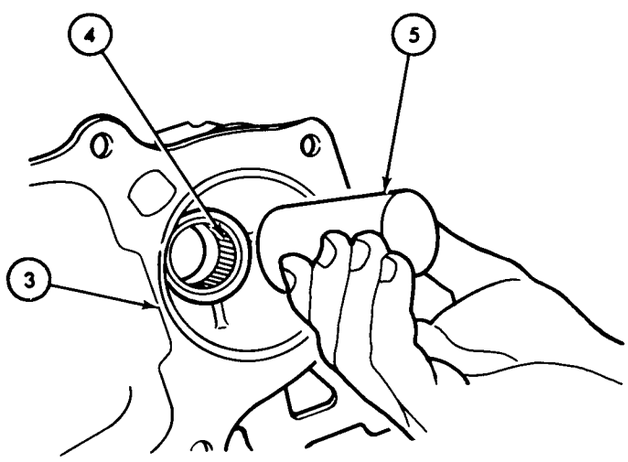

TA 156239

7-12. Transfer Repair (Cont'd)

STEP NO.	LOCATION	ITEM	ACTION	REMARKS
12.	Thrust washer (6) to transfer case (3)	Two rivets (8)	*a.* Center punch heads of rivets (8).	Use small center punch.
			b. Drill off heads of rivets (8) only.	Use drill (7) and 3/16 in. drill bit.
			c. Punch out rivets (8) from case (3).	Use 1/8 in. (3.1 mm) straight punch.
				Discard rivets (8).
				Do not drill out rivet holes in transfer case (3).
13.		Thrust washer (6)	Remove from transfer case (3).	Discard thrust washer (6).
14.	Rear output shaft retainer (9)	Rear output shaft seal (11)	*a.* Place driver plug (10) to seal (11).	Seal (11) can also be removed by arbor press.
			b. Drive seal (11) from retainer (9).	Discard seal (11).

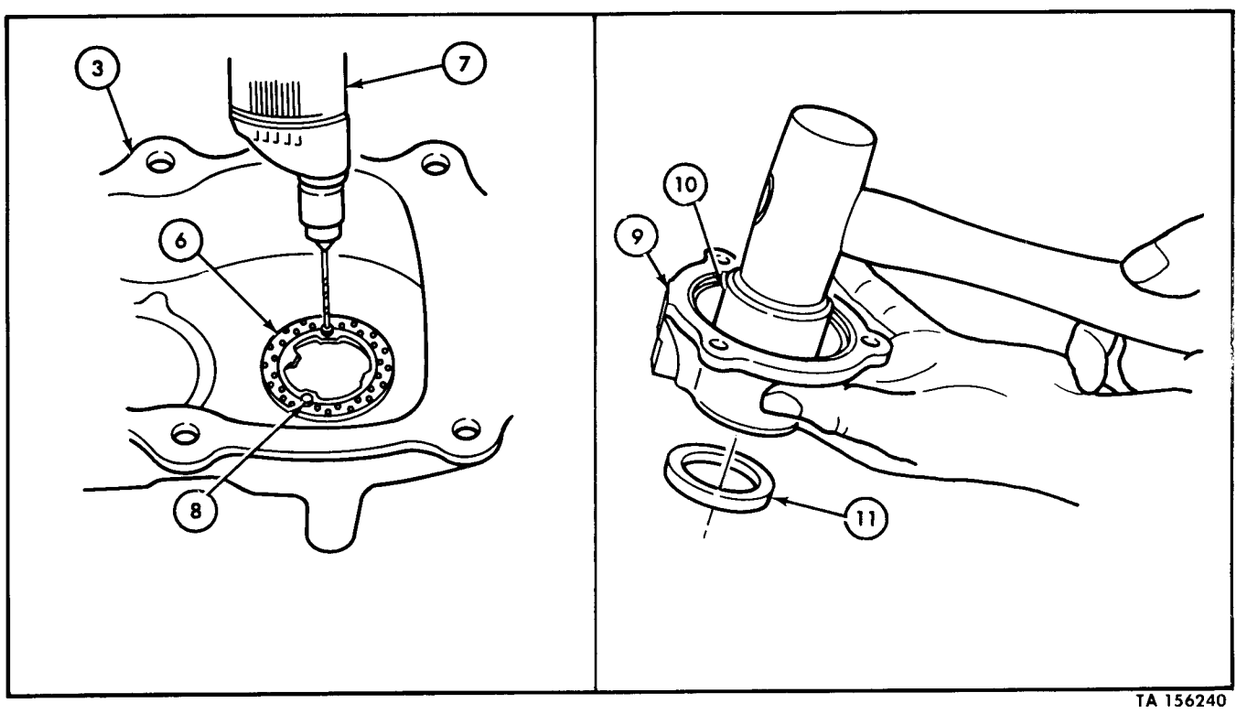

TA 156240

7-12. Transfer Repair (Cont'd)

STEP NO.	LOCATION	ITEM	ACTION	REMARKS
		CAUTION		
		Use care not to damage the two companion flanges when placing in vise and removing wear sleeves.		
15.		Two companion flanges (1)	Secure in bench vise.	Use brass jaws in vise.
16.		Wear sleeve (2)	Split open and remove from each companion flange (1).	Use sharp chisel and hammer. Discard wear sleeves (2).

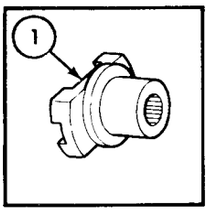

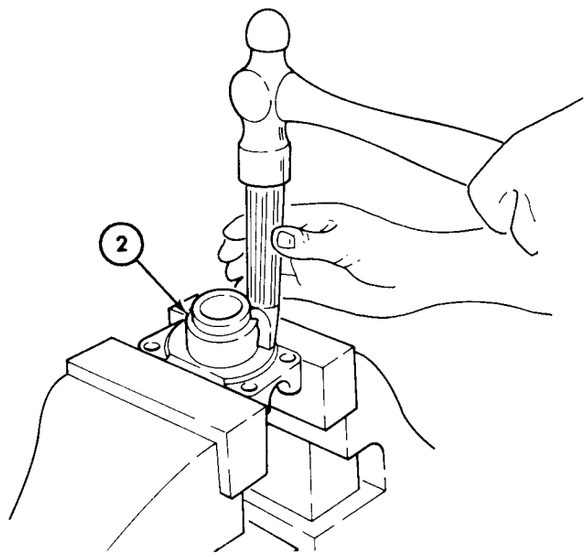

17.	Transmission output shaft (3)	Bearing race (7), speedometer drive gear (6), spacer (5), and transfer input gear (4)	Slide from shaft (3).	

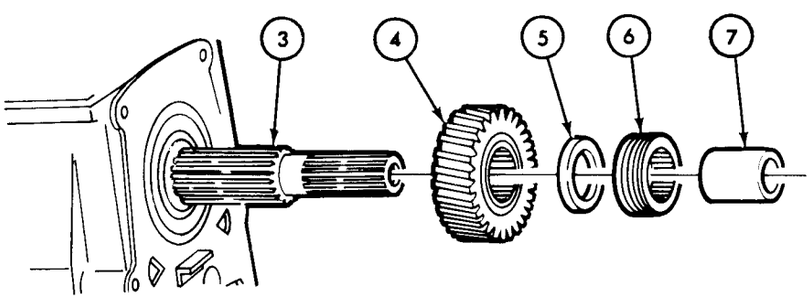

TA 156241

7-12. Transfer Repair (Cont'd)

STEP NO.	LOCATION	ITEM	ACTION	REMARKS
	b. CLEANING, INSPECTION, AND REPAIR			
		NOTE • Cleaning instructions are found in paragraph 7-6. • Inspection and repair instructions are found in paragraph 7-7.		
	c. REASSEMBLY			
		NOTE Lubricate parts during assembly with GO 80-90 transmission lubricant.		
18.		Two new wear sleeves (2)	*a.* Place one on each companion flange shaft (1). *b.* Using block of wood and hammer, drive onto flange shaft (1) until flush with end of shaft (1).	

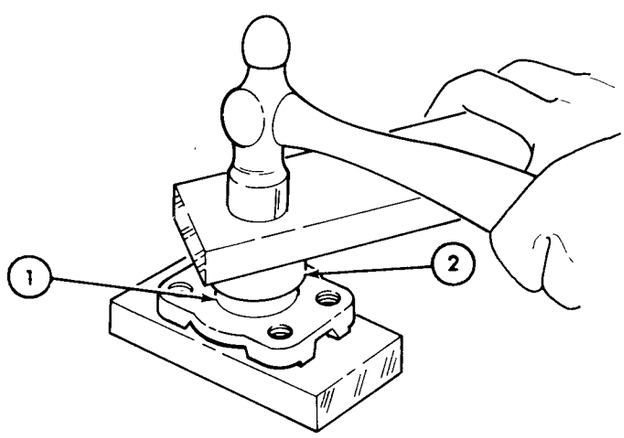

TA 156242

7-12. Transfer Repair (Cont'd)

STEP NO.	LOCATION	ITEM	ACTION	REMARKS
19.	Output shaft retainer (5)	New seal (1)	*a.* Coat outside surface with sealing compound.	
			b. Position seal (1) to retainer (5), and place on arbor press (2).	Install seal (1) with lip of seal facing in.
			c. Place block (4) between press ram (3) and seal (1).	
			d. Press seal (1) into retainer (5).	Press seal (1) so surface is flush with surface of retainer (5).
			e. Lubricate between lips of seal with GAA grease.	

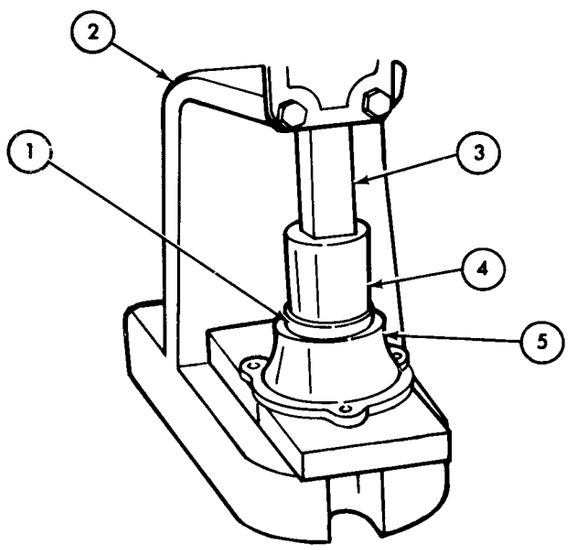

20.		New thrust washer (9)	Place on transfer case (6).	

TA 156243

7-12. Transfer Repair (Cont'd)

STEP NO.	LOCATION	ITEM	ACTION	REMARKS
		NOTE Assistant will hold transfer case during step 21.		
21.		Two new rivets (10)	*a.* Apply sealing compound to shank of of rivet (10). *b.* Install through thrust washer (9) and case (6) in rivet hole (8). *c.* Place lower punch (11) in vise (12). *d.* Place rivet (10) on top of lower punch (11). *e.* Place transfer case (6) over rivet (10). *f.* Place upper punch (7) of top of rivet (10). *g.* Strike upper punch (7) to peen over rivets (10). *h.* Apply sealer to outside of case (6) to cover rivets (10) and fill rivet holes.	

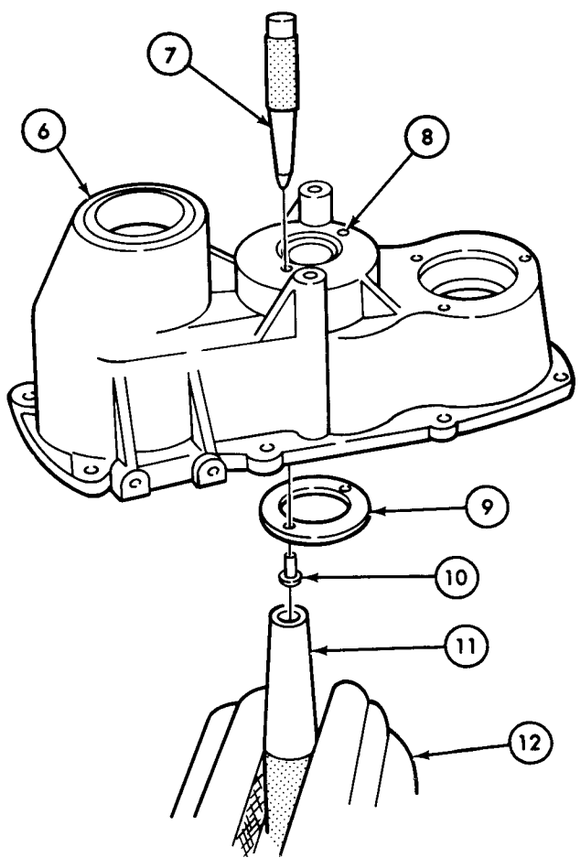

TA 156244

7-12. Transfer Repair (Cont'd)

STEP NO.	LOCATION	ITEM	ACTION	REMARKS
22.		Intermediate gear (6) and shaft (3)	*a.* Place in transfer case (7).	
			b. Aline locating pin (4) on shaft (3) with case slot (8).	
			c. Place transfer case (7) in arbor press (2) with protector block (5) between press ram (1) and shaft (3).	
			d. Press shaft (3) into case (7).	Make sure locating pin (4) is alined with case slot (8).

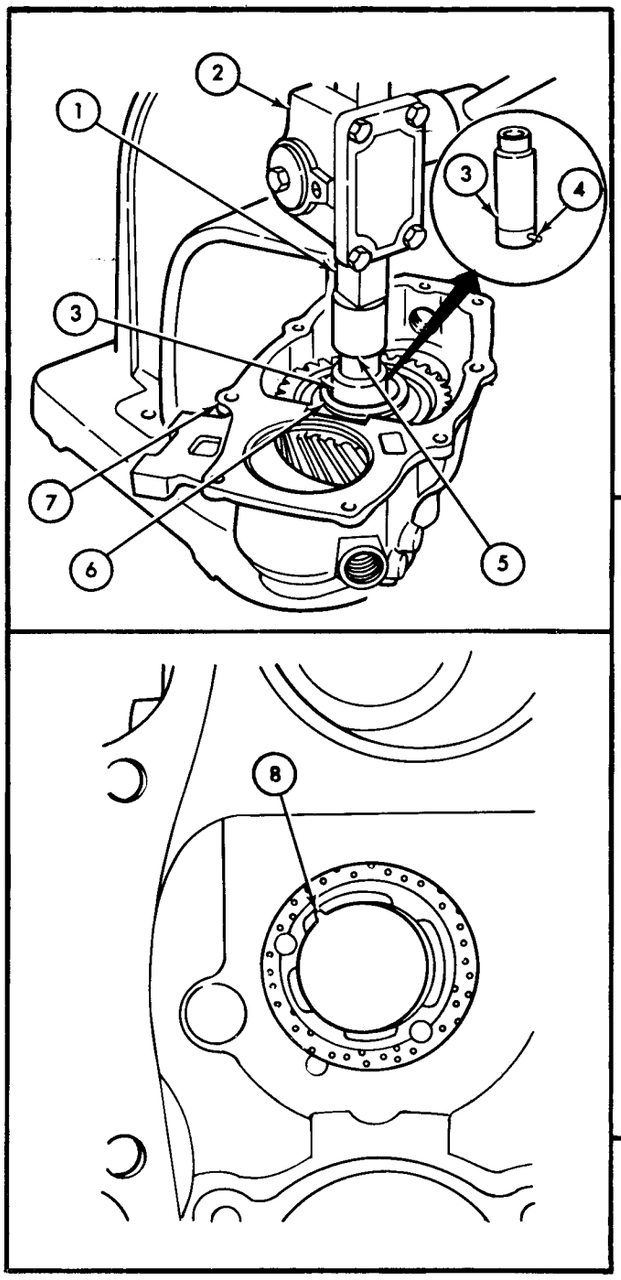

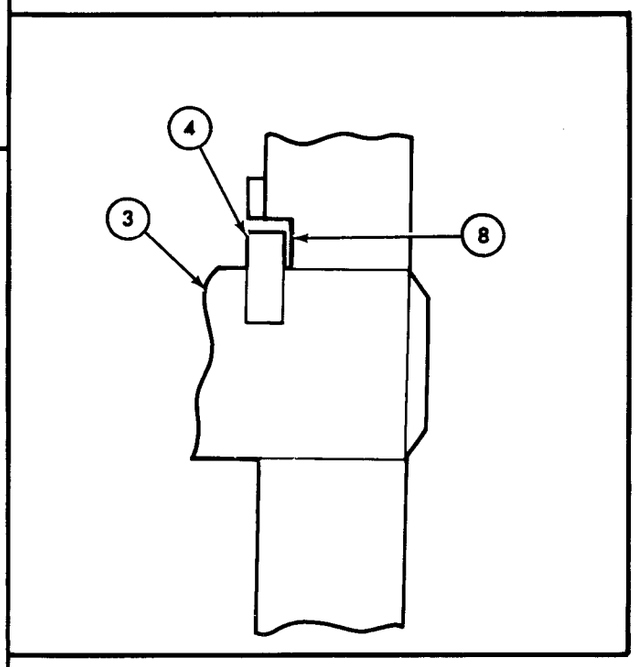

TA 156245

7-12. Transfer Repair (Cont'd)

STEP NO.	LOCATION	ITEM	ACTION	REMARKS
23.		Front bearing (11)	*a.* Place output shaft (10) in arbor press (2) with front bearing (11) on shaft (10). *b.* Place protector block (9), between output shaft (10) and press ram (1). *c.* Press bearing (11) on shaft (10).	
24.		Output gear (13)	Slide on shaft (10) with extended part (12) of gear (13) facing front bearing (11).	
25.		Sleeve (14)	Press into shaft (10).	
26.		New snapring (16)	Install in groove (17) of rear bearing (15).	Use snapring pliers.

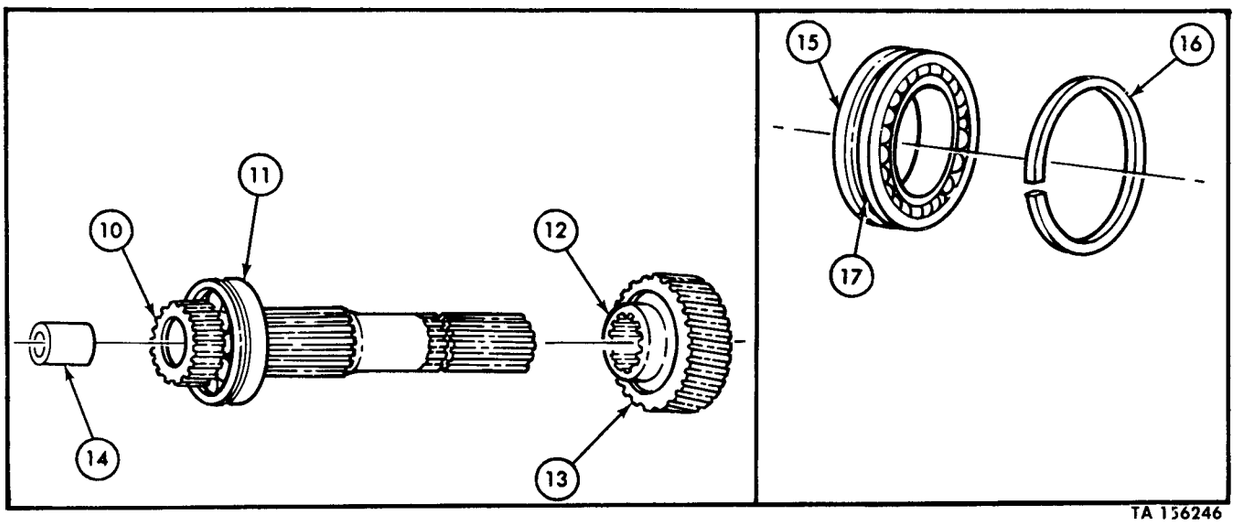

TA 156246

7-12. Transfer Repair (Cont'd)

STEP NO.	LOCATION	ITEM	ACTION	REMARKS
27.		Output shaft (1)	Place in transfer case (2).	
			NOTE Assistant will hold transfer case in position during step 28.	
28.		Rear bearing (3)	*a.* Install on output shaft (1) with snapring (4) facing away from case (2). *b.* Place case (2) with output shaft (1) and rear bearing (3) in arbor press (8). *c.* Place spacer (6) between press ram (7) and output shaft (1). *d.* Place driver plug (10) between rear bearing (3) and arbor press bed (9). *e.* Press rear bearing (3) onto shaft (1) and into bore (5) of case (2).	

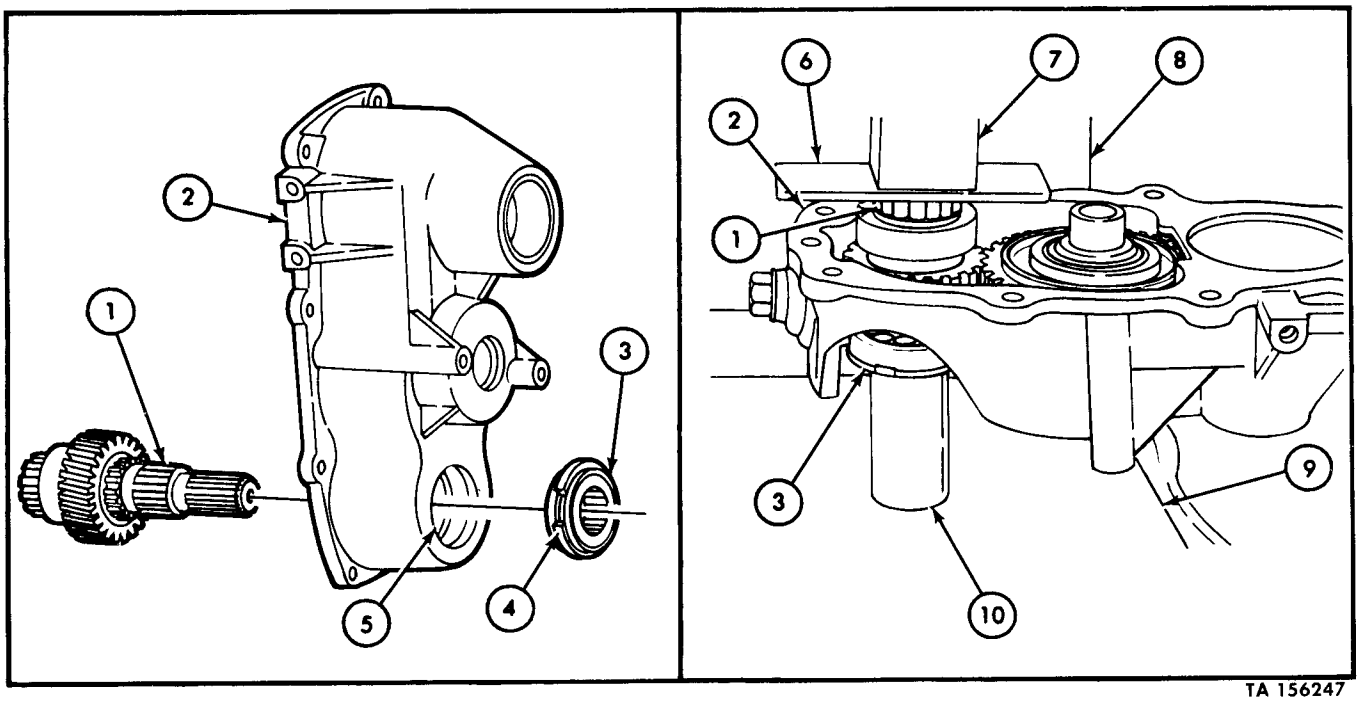

TA 156247

7-12. Transfer Repair (Cont'd)

STEP NO.	LOCATION	ITEM	ACTION	REMARKS
29.		Selective spacer (17)	Slide over end of output shaft (16) to rear bearing (14).	Recessed surface [illegible] face in.
30.		New snapring (13)	*a.* Place alining tool (12) over end of shaft (16).	
			b. Push snapring (13) over tool (12) onto shaft (16) using driver (11).	
			c. Slide snapring (13) into groove (15) of shaft (16).	Be sure snapring (13) is seated in groove (15).

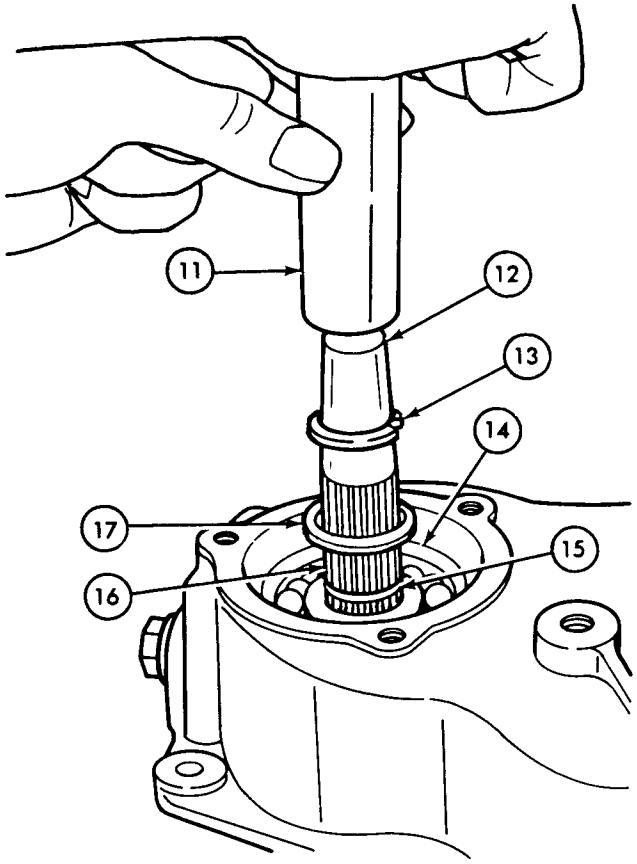

TA 156248

7-12. Transfer Repair (Cont'd)

STEP NO.	LOCATION	ITEM	ACTION	REMARKS
31.		Selective spacer (2)	*a.* Check clearance between spacer (2) and rear bearing (5) using thickness (feeler) gage (1).	
			b. Clearance of .002 in. (.0508 mm) is required between spacer (2) and bearing (5).	If clearance is less than .002 in. (.0508 mm), use thinner size spacer (2). If clearance is more than .002 in. (.0508 mm), use thicker size spacer (2).
32.		Roller retainer (3)	Install over snapring (4).	Retainer (3) recess encases snapring (4).

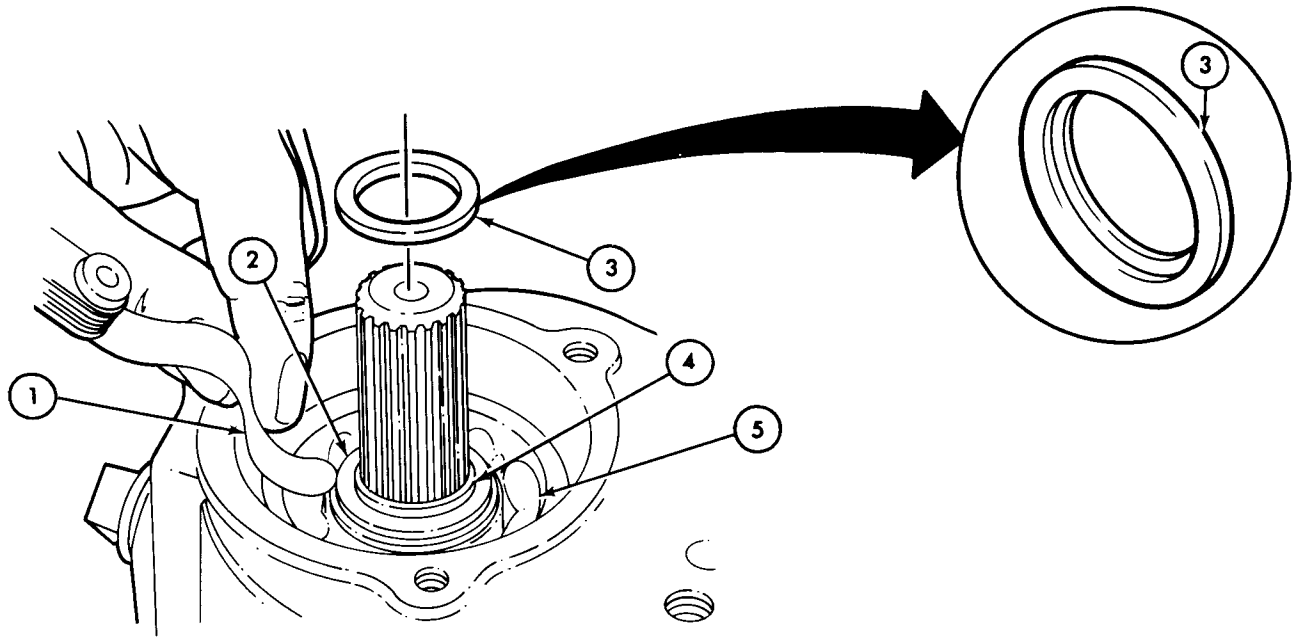

TA 156249

7-12. Transfer Repair (Cont'd)

STEP NO.	LOCATION	ITEM	ACTION	REMARKS
33.		New roller bearing (6)	*a.* Drive into bore (7) of transfer case (8) with driver (9).	Bearing (6) can also be pressed in.
			b. Drive bearing (6) flush with neck (10) of transfer case (8).	

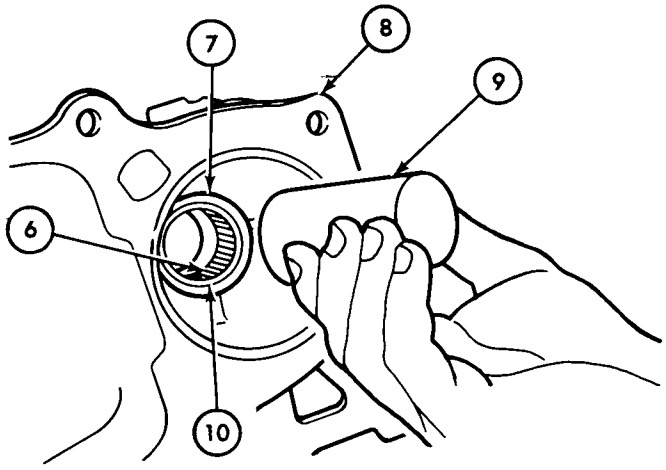

NOTE

Assistant will hold transfer case (8) in position during step 34.

34.		New parking brakedrum seal (14)	*a.* Place transfer case (8) and seal (14) in arbor press (15).	Coat outside surface of seal (14) with sealing compound.
			b. Place protector block (11) between seal (14) and press ram (12).	
			c. Press seal (14) into bore (13) of transfer case (8).	Pack cavity between oil seal (14) lips with GAA grease.

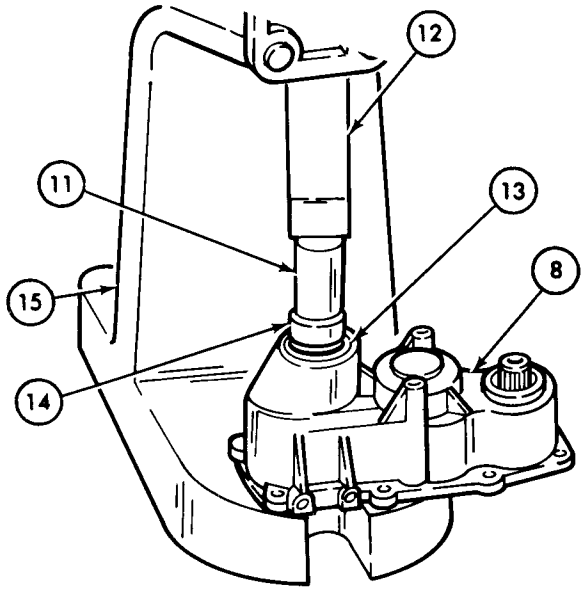

TA 156250

7-12. Transfer Repair (Cont'd)

STEP NO.	LOCATION	ITEM	ACTION.	REMARKS
		CAUTION		
		Bearing rollers are small and easily lost. Use care not to lose bearing rollers when installing.		
35.		Forty-four bearing rollers (6), and three new spacers (3), (4), and (5)	*a.* Install spacer (3) over intermediate shaft (2) and into intermediate gear (1).	Lubricate spacer (3) with GAA grease.
			b. Place twenty-two bearing rollers (6) on spacer (3) and install second spacer (4) on bearing rollers (6).	Lubricate rollers (6) and spacer (4) with GAA grease to hold in place.
			c. Place twenty-two bearing rollers (6) on second spacer (4) and install third spacer (5) on bearing rollers (6).	Lubricate rollers (6) and spacer (5) with GAA grease to hold in place.

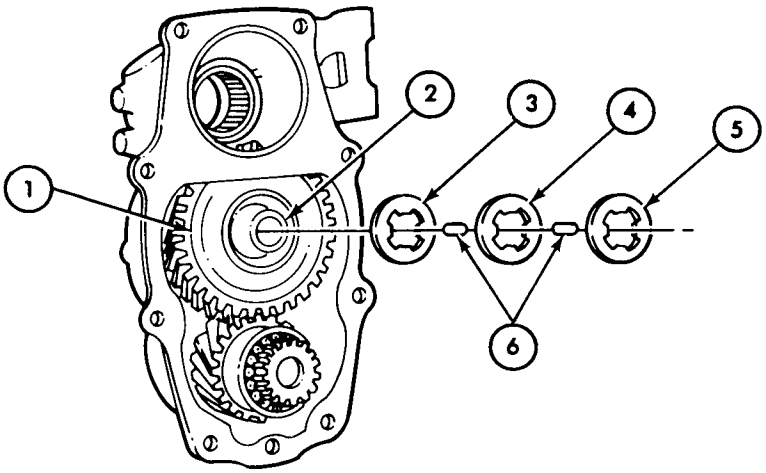

END OF TASK!

FOLLOW-ON TASK: Reattach transfer to transmission (para 7-22).

TA 156251

Section IV. TRANSMISSION MAINTENANCE

7-13. General

This section provides maintenance procedures assigned to direct support and general support levels for transmission assembly. To locate a specific procedure, see the transmission maintenance task summary below:

7-14. Transmission Maintenance Task Summary

7-15. Disassembly of Transmission into Subassemblies

This task covers:

Disassembly

INITIAL SETUP:

Applicable Models	Equipment Condition Reference	Condition Description
All	Para 7-11	Transfer separated from transmission.

Test Equipment

None

Special Tools

Countershaft remover/replacer
Mechanical puller

Special Environmental Conditions

Clean, well-ventilated work area.

Materials/Parts

None

Personnel Required

One mechanic

General Safety Instructions

None

Manual References

TM 9-2320-218-34P

STEP NO.	LOCATION	ITEM	ACTION	REMARKS
	DISASSEMBLY			
		CAUTION Before starting disassembly of the transmission, thoroughly clean externally to avoid getting dirt inside.		
		NOTE Some replacement parts of the transmission transfer assembly can be obtained only in kits. If after inspection, one of the parts needs replacement, see TM 9-2320-218-34P.		
1.	Gearshift housing (1) to transmission case (5)	Six capscrews (2) and lockwashers (3)	Remove.	Discard lockwashers (3).
2.		Housing (1) and gasket (4)	Remove from transmission case (5) by lifting straight up.	Discard gasket (4).

7-15. Disassembly of Transmission into Subassemblies (Cont'd)

STEP NO.	LOCATION	ITEM	ACTION	REMARKS

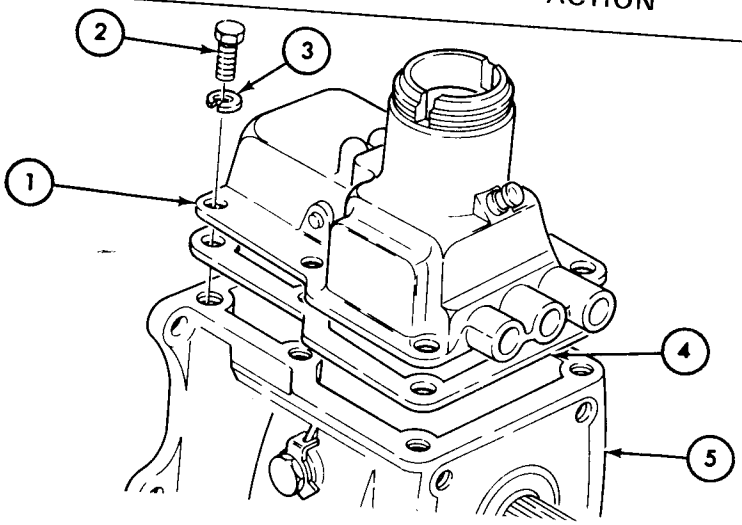

NOTE

If optional pivot (10) is installed, perform steps 3 and 4.

3.	Transmission case (5)	Pivot locking tab washer (9)	Bend tabs away from pivot (10).	
4.		Pivot (10) and locking tab washer (9)	Remove from transmission case (5).	Discard locking tab washer (9).

NOTE

If optional pivot (10) is not installed, perform step 5.

5.	Transmission case (5)	Pivot (7)	Remove.	
6.		Shifter arm (6)	Remove from transmission case (5) by lifting straight up.	Bottom of arm (6) fits in slot (8).

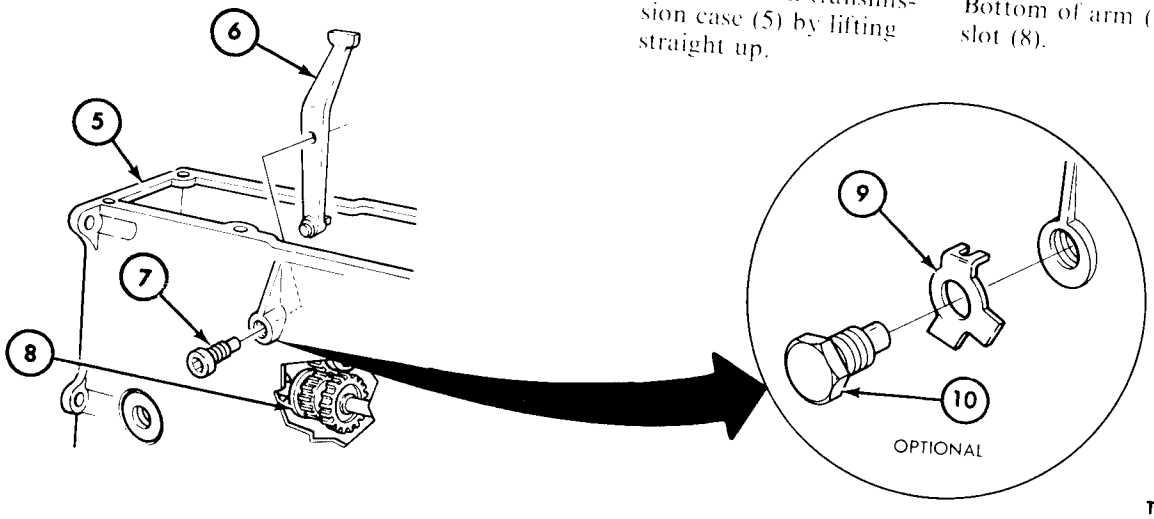

TA 156252

7-15. Disassembly of Transmission into Subassemblies (Cont'd)

STEP NO.	LOCATION	ITEM	ACTION	REMARKS
7.	Input shaft retainer (4) to transmission case (3)	Three capscrews (1) and lockwashers (5)	Remove.	Discard lockwashers (5).
8.		Input shaft retainer (4) and gasket (2)	Remove from transmission case (3).	Discard gasket (2).

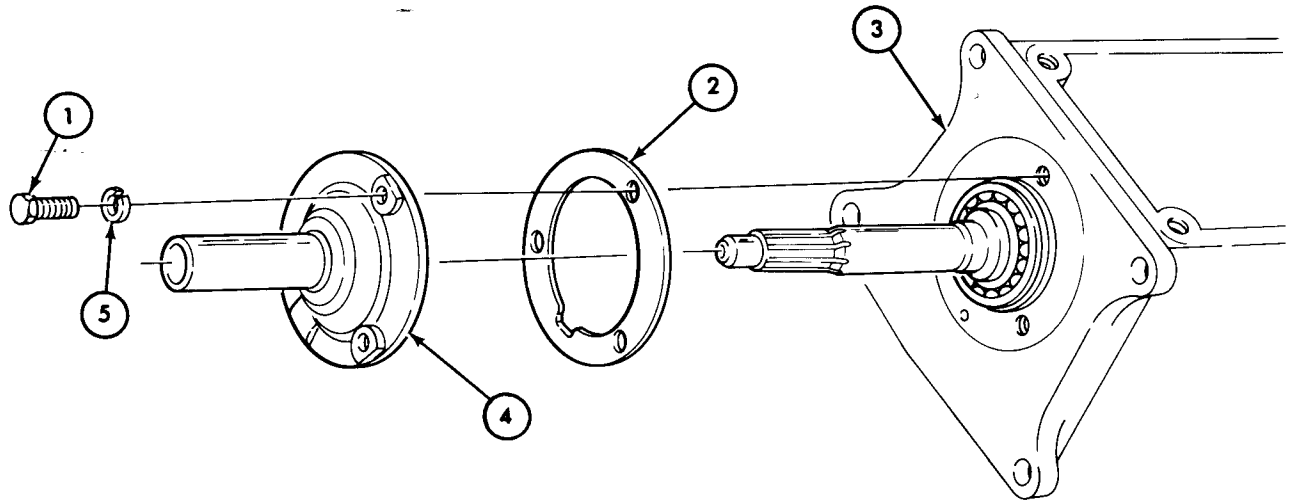

9.	Transmission case (3)	Two lockpin screws (6)	Remove from each side (7) of case (3).	
10.		Lockpin (8)	Remove from transmission case (3).	

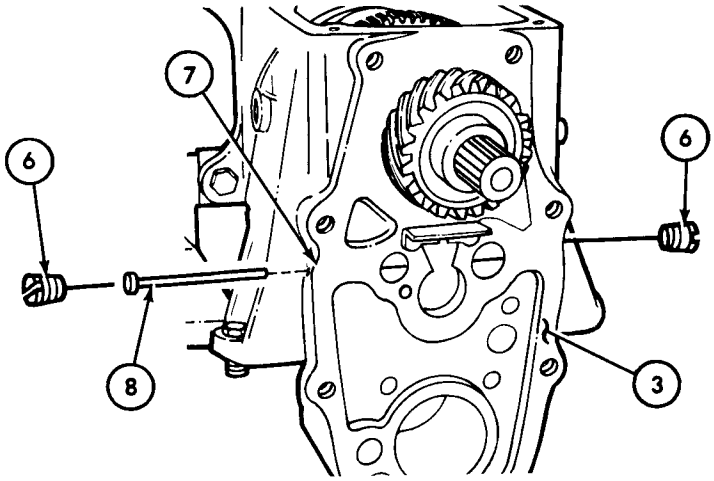

TA 156253

7-15. Disassembly of Transmission into Subassemblies (Cont'd)

STEP NO.	LOCATION	ITEM	ACTION	REMARKS
		NOTE Countershaft (11) must be removed to permit countershaft cluster gear (10) to drop down. This allows removal of input shaft.		
11.	Countershaft cluster gear (10)	Countershaft (11)	Drive towards rear of transmission case (3) using remover/replacer (9) until cluster gear (10) drops.	Leave remover/replacer (9) in countershaft cluster gear (10).

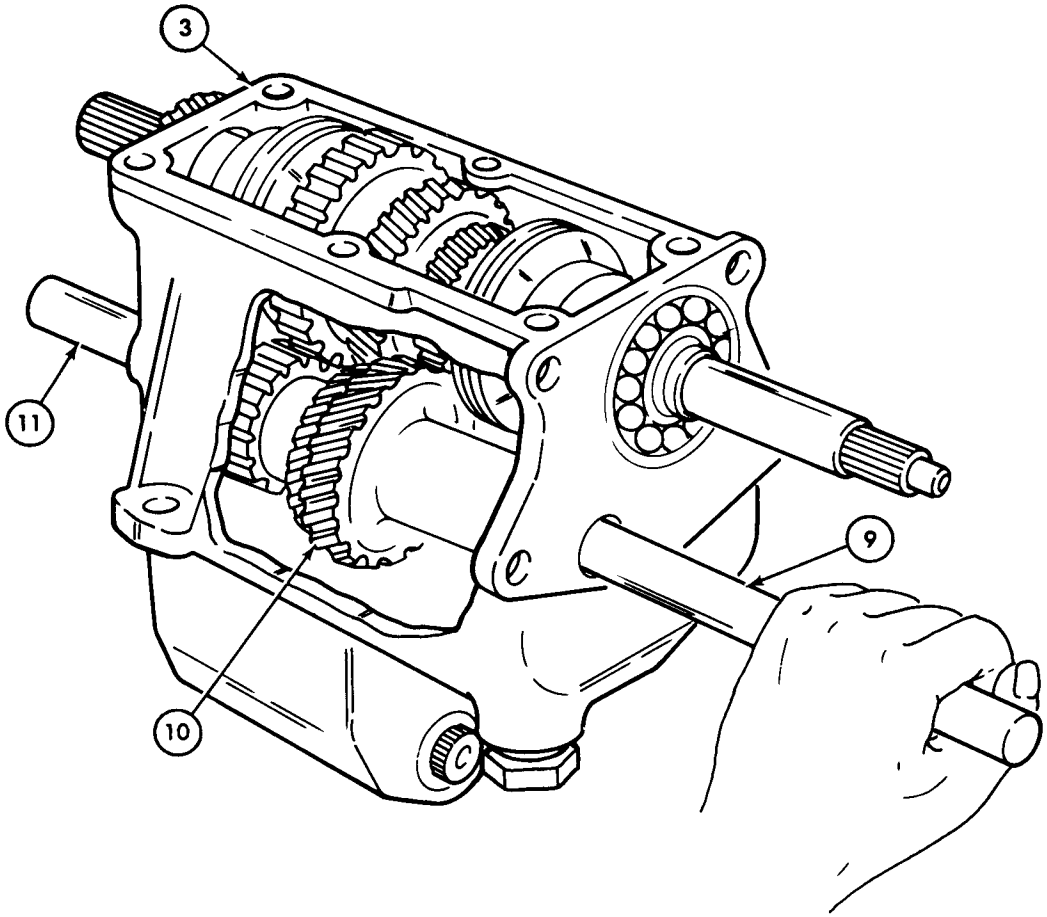

TA 156254

7-15. Disassembly of Transmission into Subassemblies (Cont'd)

STEP NO.	LOCATION	ITEM	ACTION	REMARKS
		NOTE		
		Tip transmission forward slightly to prevent input shaft needle bearing from falling into transmission case.		
12.		Snapring (4)	Remove from bearing (3).	Use snapring pliers. Discard snapring (4).
13.		Input shaft (1)	Tap lightly on shaft (1) and pull from transmission (2).	

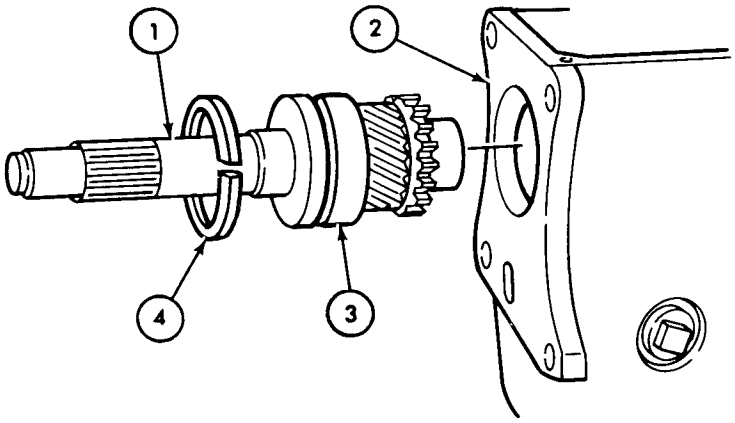

NOTE

Use care not to lose needle bearings.

14.	Input shaft (1)	Fourteen needle bearings (5)	Remove.	

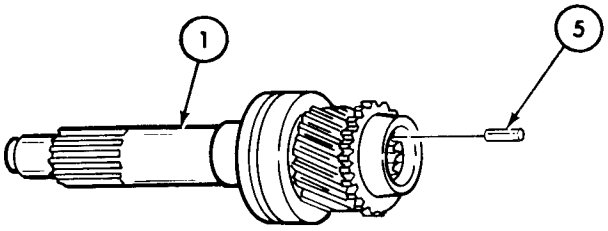

TA 156255

7-15. Disassembly of Transmission into Subassemblies (Cont'd)

STEP NO.	LOCATION	ITEM	ACTION	REMARKS
		NOTE		
		Do not perform step 15 if total disassembly of transmission transfer is being performed.		
15.	Output shaft (6)	Bearing race (10), speedometer drive gear (9), spacer (8), and transfer input gear (7)	Slide off.	
16.		Rear bearing snapring (11)	Remove from rear bearing (12).	Use snapring pliers. Discard snapring (11).

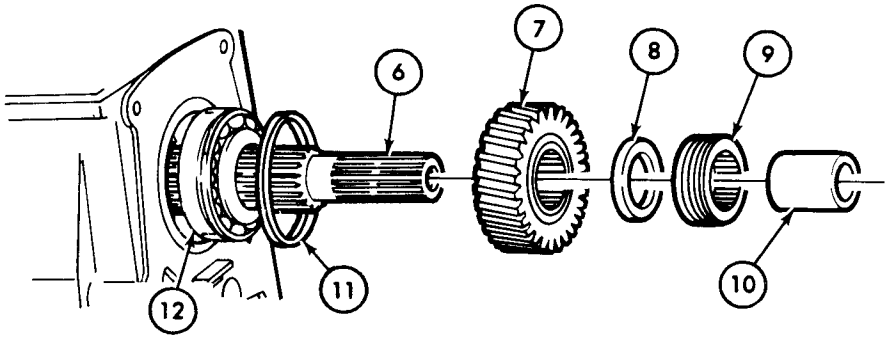

17.	Rear of transmission (2)	Rear bearing (13)	*a.* Pull out of transmission case enough to attach puller (14). *b.* Remove using puller (14).	

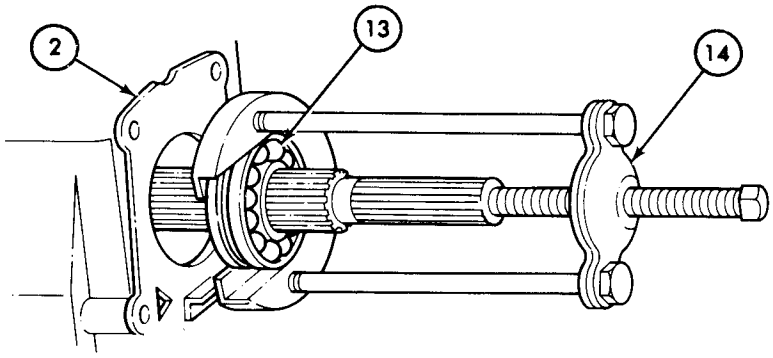

TA 156256

7-15. Disassembly of Transmission into Subassemblies (Cont'd)

STEP NO.	LOCATION	ITEM	ACTION	REMARKS
18.	Transmission case (1)	Output shaft assembly (2)	Tilt upward and slide from bearing bore (3).	

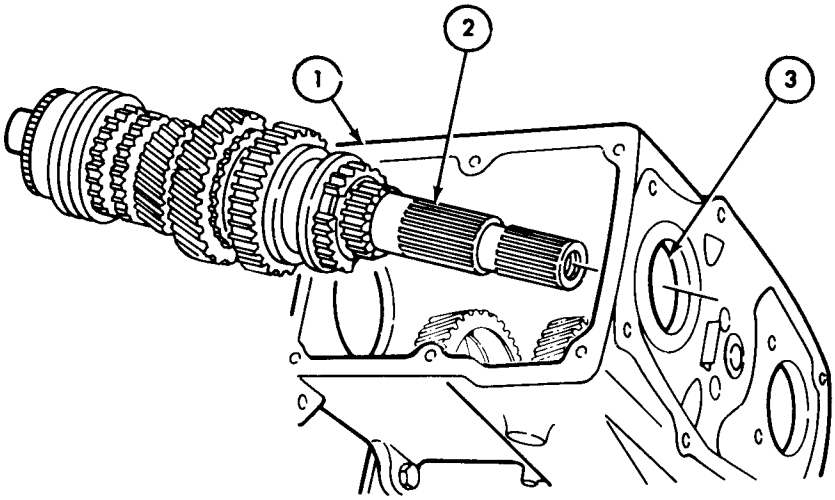

NOTE

Use care that the cluster gear bearings do not fall out and become lost.

19.	Transmission case (1)	Cluster gear (4)	Lift straight up and out.	

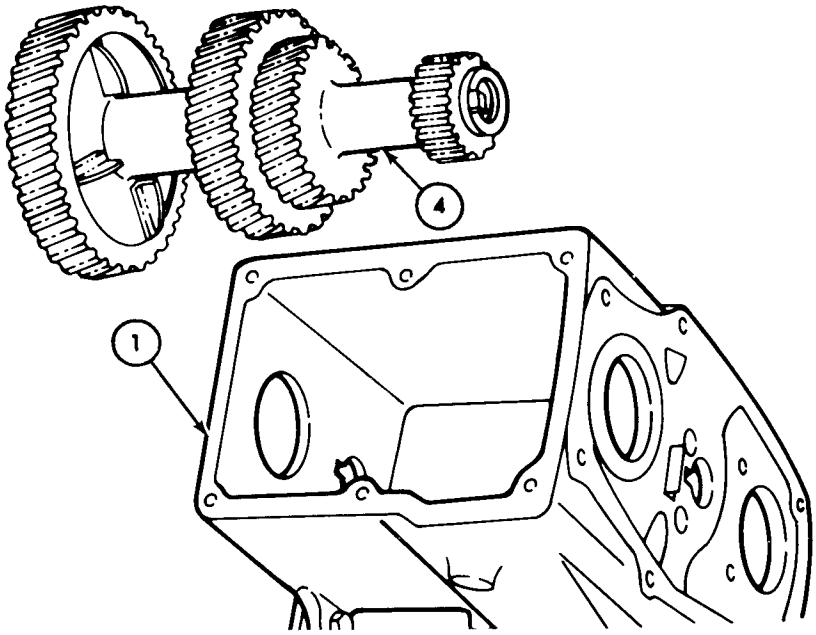

TA 156257

7-15. Disassembly of Transmission into Subassemblies (Cont'd)

STEP NO.	LOCATION	ITEM	ACTION	REMARKS
20.	Transmission case (1)	Low and reverse idler shaft (6)	Remove.	It may be necessary to drive out shaft (6).
21.		Low and reverse idler gear (5)	Remove from transmission case (1).	

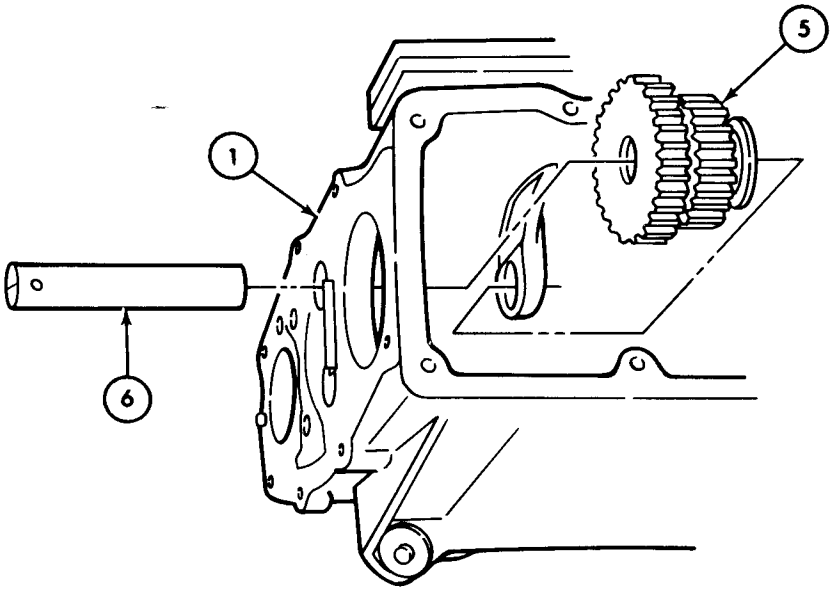

22.	Clutch cover (9) to transmission (1)	Four capscrews (7) and lockwashers (8)	Remove.	Discard lockwashers (8).
23.		Clutch cover (9) and gasket (10)	Remove.	Discard gasket (10).

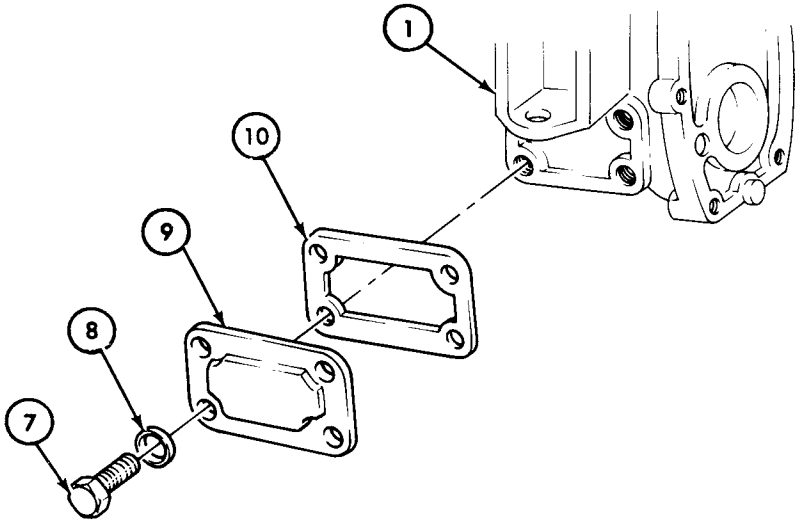

TA 156258

7-15. Disassembly of Transmission into Subassemblies (Cont'd)

STEP NO.	LOCATION	ITEM	ACTION	REMARKS
24.	Transmission case (1)	Clutch shifter detent plug (2) and gasket (3)	Remove.	Discard gasket (3).
25.		Spring (4) and ball bearing (5)	Remove from bore (6) of case (1).	

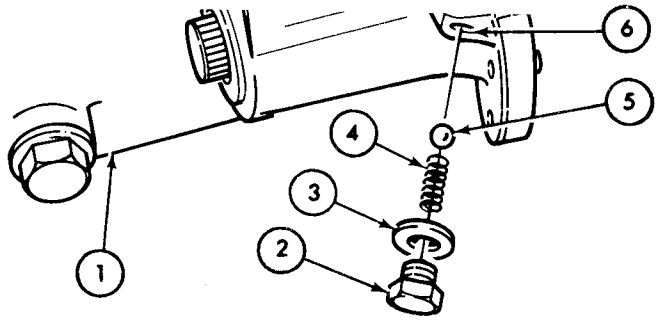

26.	Shifter shaft (7)	Shifter fork rear snapring (8)	Push shifter shaft (7) forward and remove snapring (8).	Discard snapring (8).

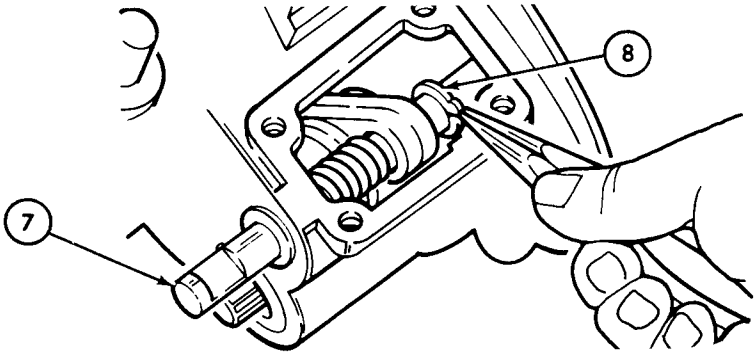

27.	Shifter shaft (7)	Shifter fork front snapring (9)	Push shifter shaft (7) rearward and remove snapring (9).	Discard snapring (9).

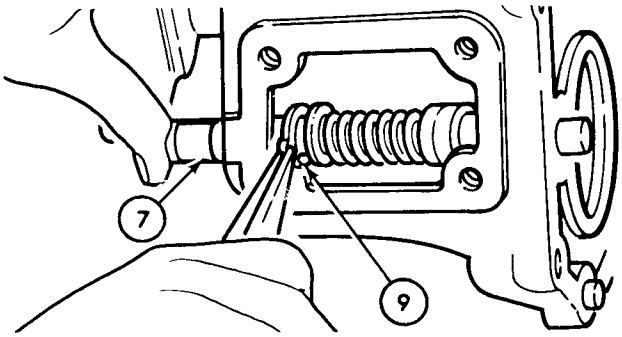

TA 156259

7-15. Disassembly of Transmission into Subassemblies (Cont'd)

STEP NO.	LOCATION	ITEM	ACTION	REMARKS
28.		Shifter shaft (7), washer (12), and spring (11)	Remove from transmission case (1) and shifter fork (10).	

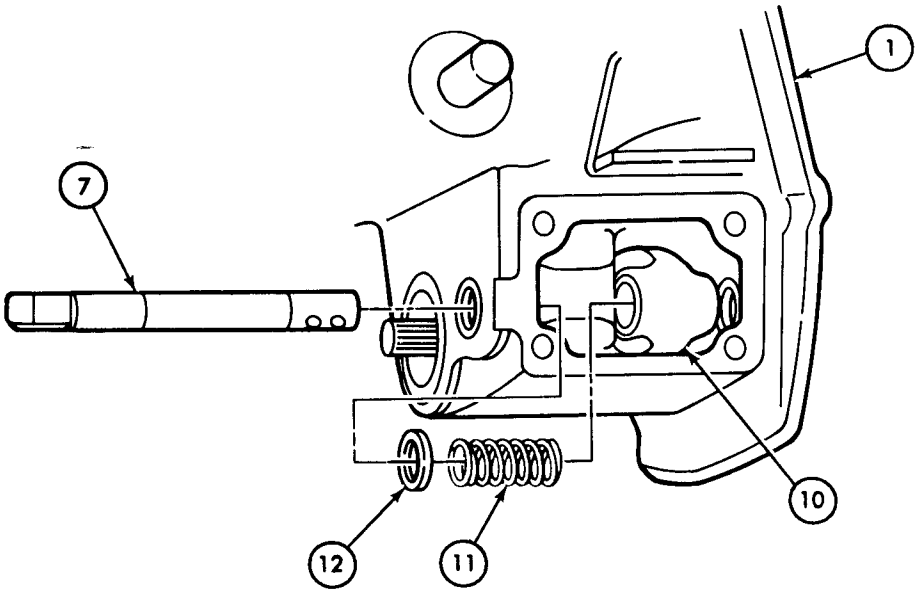

29.		Shifter fork (10) and clutch (13)	Remove from transmission (1).	

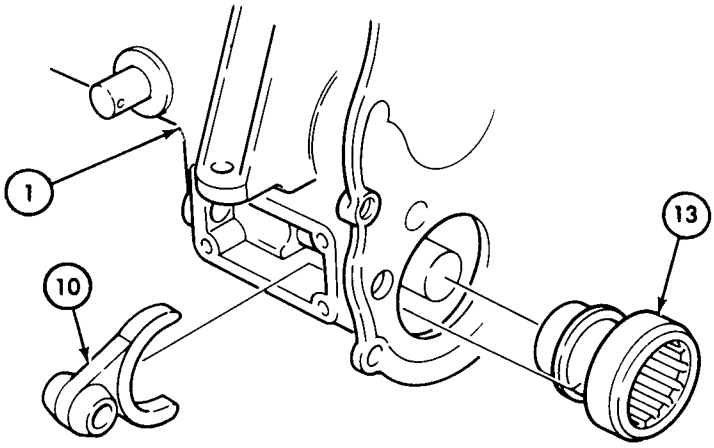

TA 156260

7-15. Disassembly of Transmission into Subassemblies (Cont'd)

STEP NO.	LOCATION	ITEM	ACTION	REMARKS
30.	Output shaft and bearing assembly (1)	Rear snapring (2)	Remove.	Use snapring pliers. Discard snapring (2).

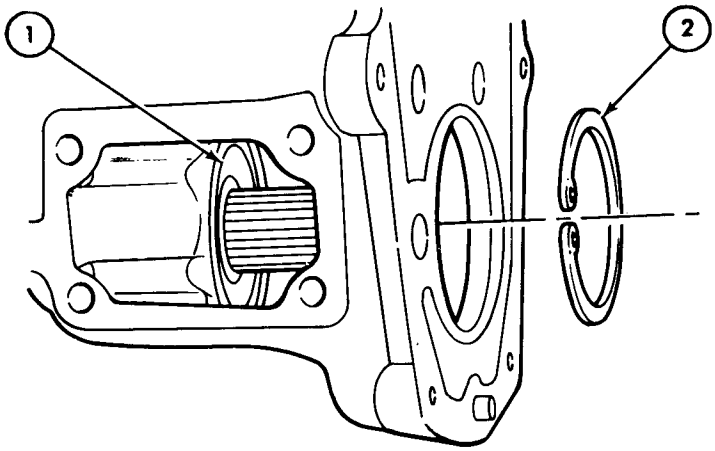

31.	Transmission case (3)	Output shaft and bearing assembly (1)	Tap out from bore (4).	
32.		Front snapring (5)	Remove from transmission case (3).	Use snapring pliers. Discard snapring (5).

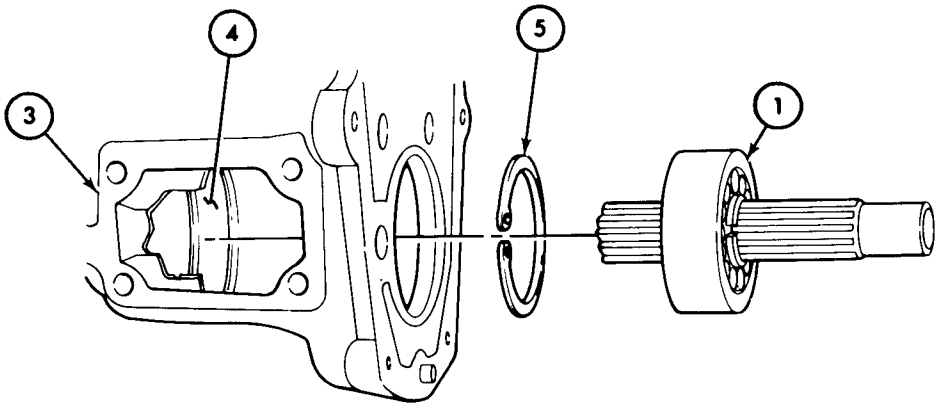

TA 156261

7-15. Disassembly of Transmission into Subassemblies (Cont'd)

STEP NO.	LOCATION	ITEM	ACTION	REMARKS
33.	Front of transmission clutch housing (6)	Shifter shaft seal (7)	Pry out to remove.	Discard seal (7).

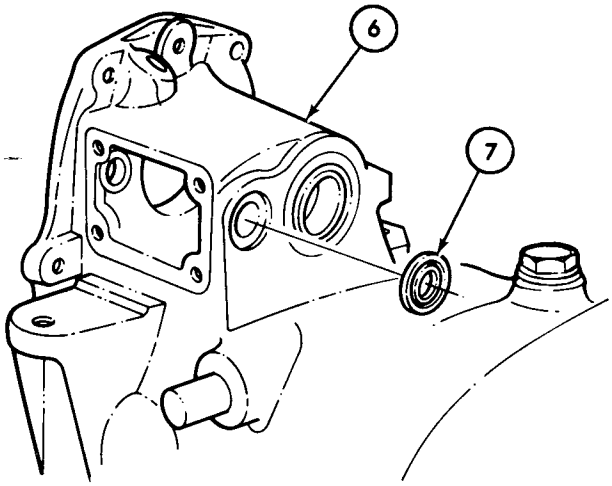

34.		Front output shaft seal (8)	Drive out from rear of transmission case (3).	Discard seal (8).
35.		Magnetic drain plug (9) and washer (10)	Remove from bottom of transmission case (3).	Discard washer (10).

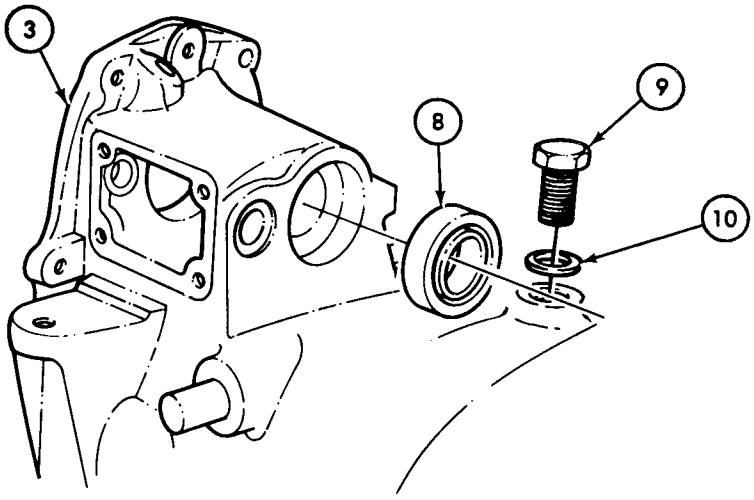

END OF TASK!

TA 156262

7-15. Disassembly of Transmission into Subassemblies (Cont'd)

STEP NO.	LOCATION	ITEM	ACTION	REMARKS
33.	Front of transmission clutch housing (6)	Shifter shaft seal (7)	Pry out to remove.	Discard seal (7).

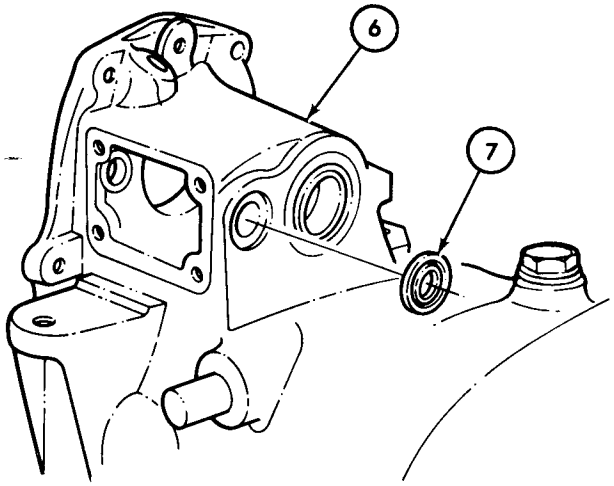

34.		Front output shaft seal (8)	Drive out from rear of transmission case (3).	Discard seal (8).
35.		Magnetic drain plug (9) and washer (10)	Remove from bottom of transmission case (3).	Discard washer (10).

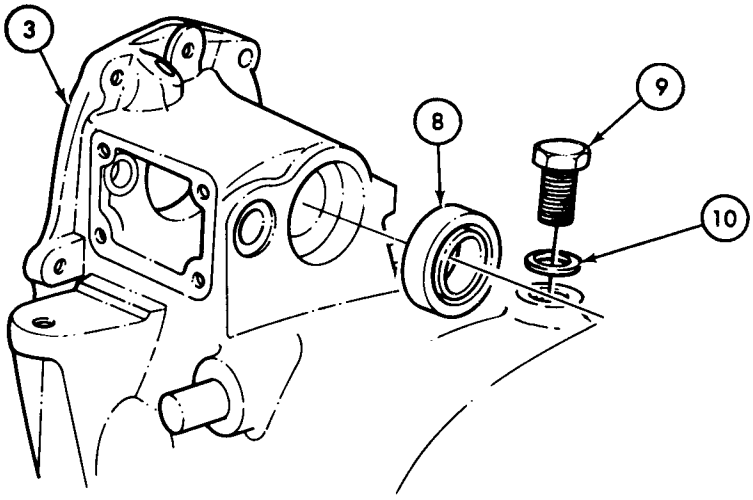

END OF TASK!

TA 156262

7-16. Transmission Input Shaft Maintenance

This task covers:

a. Disassembly
b. Cleaning, Inspection, and Repair
c. Reassembly

INITIAL SETUP:

Applicable Models
All

Equipment Condition Reference
Para 7-15

Condition Description
Transmission disassembled into subassemblies.

Test Equipment
None

Special Tools
Arbor press
Mechanical puller
Protector block

Special Environmental Conditions
Clean, well-ventilated work area.

Materials/Parts
Two snaprings
Seal
Sealing compound (NSN 8030-00-252-3391)
GAA grease

Personnel Required
One mechanic

General Safety Instructions
None

Manual References
TM 9-2320-218-34P

STEP NO.	LOCATION	ITEM	ACTION	REMARKS
	a. DISASSEMBLY			
1.	Input shaft retainer (1)	Seal (2)	Remove.	Discard seal (2).

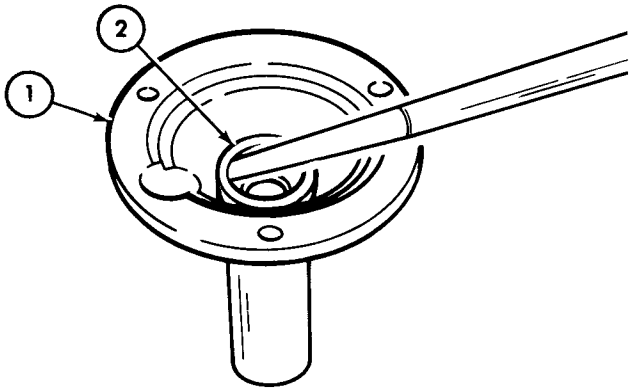

TA 156263

7-16. Transmission Input Shaft Maintenance (Cont'd)

STEP NO.	LOCATION	ITEM	ACTION	REMARKS
2.	Input shaft (4)	Snapring (3)	Remove.	Use snapring pliers. Discard snapring (3).

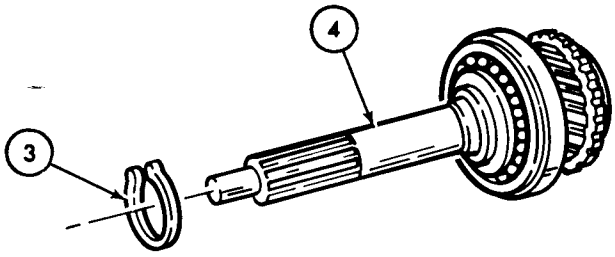

3.	Input shaft (4)	Bearing (5)	Remove.	Use puller (6).

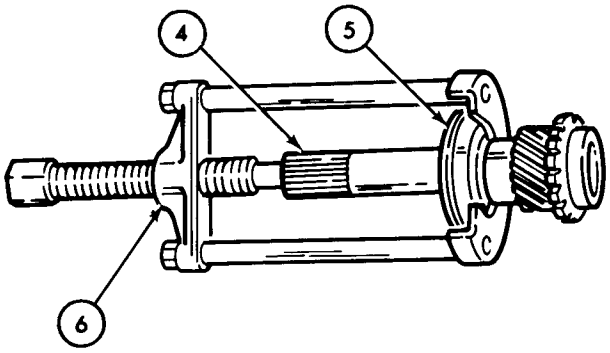

TA 156264

7-16. Transmission Input Shaft Maintenance (Cont'd)

STEP NO.	LOCATION	ITEM	ACTION	REMARKS

b. CLEANING, INSPECTION, AND REPAIR

NOTE

- Cleaning instructions are found in para. 7-6.
- Inspection and repair instructions are found in paragraph 7-7.

c. REASSEMBLY

4.		Bearing (7)	*a.* Place on input shaft (6).	Install with snapring groove facing toward front of input shaft (6).
			b. Position in press (1) with spacer (3) between press ram (2) and input shaft gear (4).	Bearing will be located on support (5).
			c. Press bearing (7) on input shaft (6).	

7-16. Transmission Input Shaft Maintenance (Cont'd)

STEP NO.	LOCATION	ITEM	ACTION	REMARKS

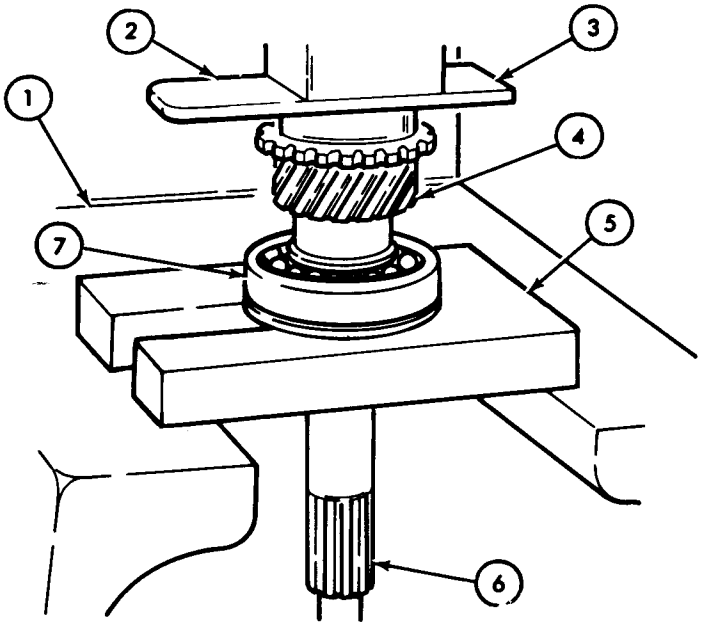

5.		New snapring (8)	Install in shaft groove (9).	Use snapring pliers. Be sure snapring (8) is seated in groove (9).

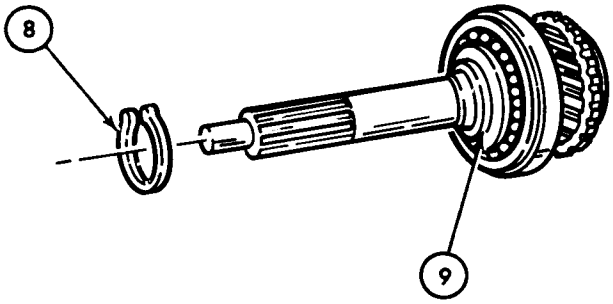

TA 156265

7-16. Transmission Input Shaft Maintenance (Cont'd)

STEP NO.	LOCATION	ITEM	ACTION	REMARKS
6.		Fourteen needle bearings (2)	Install in end of input shaft (1).	Lubricate with GAA grease. Be sure all fourteen needle bearings (2) are in place.

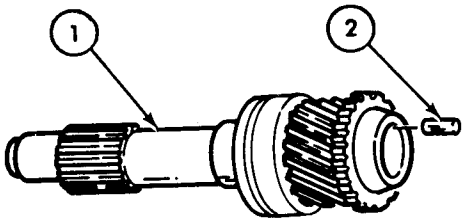

7.		New snapring (3)	Install in bearing groove (4).	Use snapring pliers. Be sure snapring (3) is seated in groove (4).

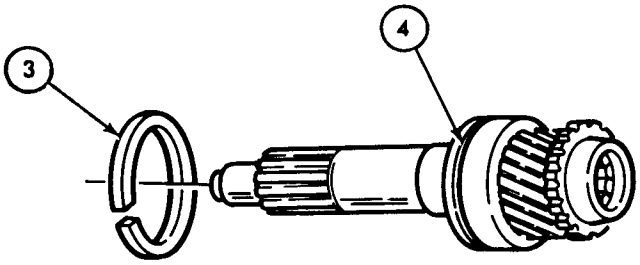

TA 156266

7-16. Transmission Input Shaft Maintenance (Cont'd)

STEP NO.	LOCATION	ITEM	ACTION	REMARKS
8.		New seal (9)	*a.* Coat outside surface with sealing compound.	
			b. Place into input shaft retainer (8)	Install with lips (10) of seal (9) facing out.
			c. Place retainer (8) in press (5) with protector block (7) between press ram (6) and seal (9).	
			d. Press seal (9) in retainer (8).	
			e. Pack between lips (10) and coat with GAA grease.	

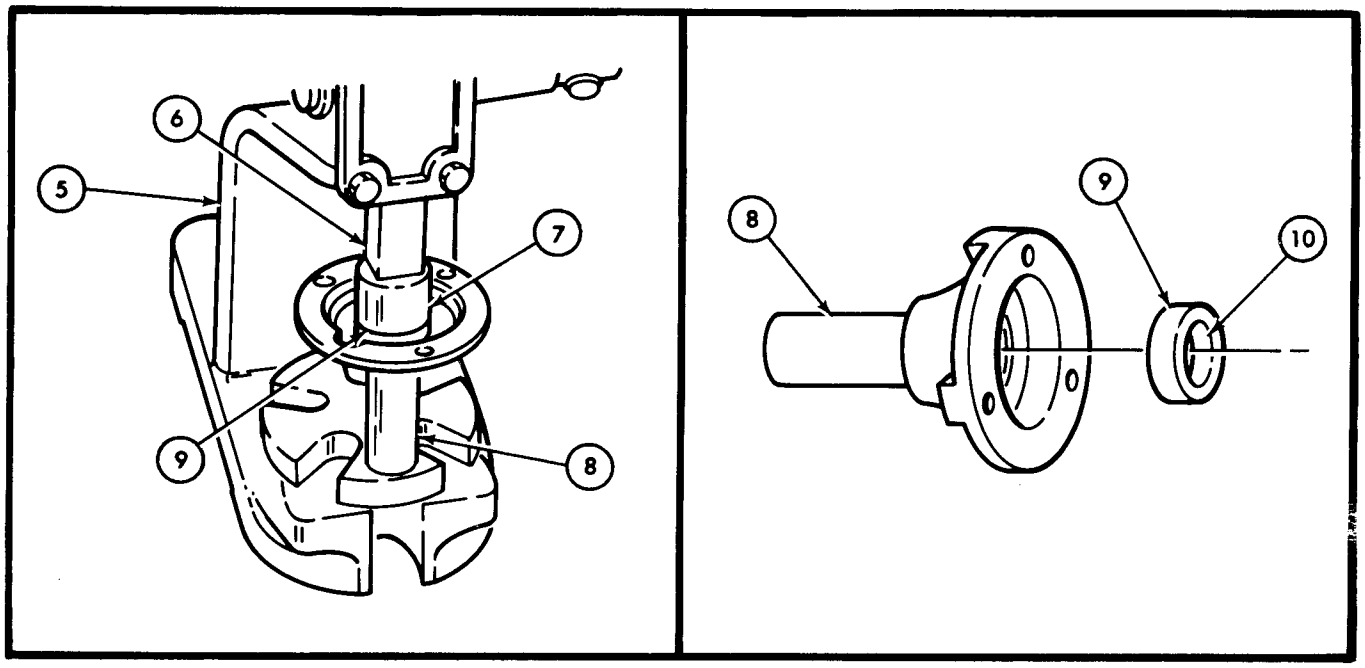

END OF TASK!

FOLLOW-ON TASK: Assemble transmission from subassemblies (para 7-21).

TA 156267

7-17. Transmission Countershaft Cluster Gear Maintenance

This task covers:

a. Disassembly
b. Cleaning, Inspection, and Repair
c. Reassembly

INITIAL SETUP:

Applicable Models
All

Equipment Condition Reference
Para 7-15

Condition Description
Transmission disassembled into subassemblies.

Test Equipment
None

Special Tools
Countershaft remover replacer

Special Environmental Conditions
Clean, well-ventilated work area.

Materials/Parts
Two thrust washers
Two spacers
GO 80-90 lubricant
GAA grease

Personnel Required
One mechanic

General Safety Instructions
None

Manual References
TM 9-2320-218-34P

STEP NO.	LOCATION	ITEM	ACTION	REMARKS
	a. DISASSEMBLY			
1.	Cluster gear (3)	Two thrust washers (1) and (4), and two spacers (2)	Remove from each end.	Discard thrust washers (1) and (4) and spacers (2). Large thrust washer (1) is at front of cluster gear (3).

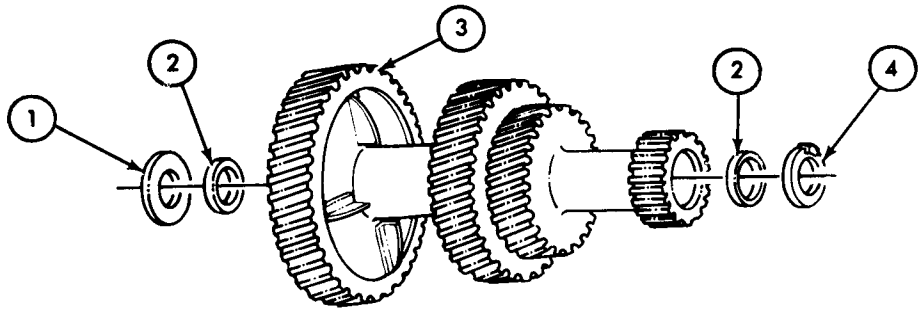

TA 156268

7-17. Transmission Countershaft Cluster Gear Maintenance (Cont'd)

STEP NO.	LOCATION	ITEM	ACTION	REMARKS
2.		Thirty-six roller bearings (5), remover-replacer (7), and long spacer (6)	Remove from cluster gear (3).	Eighteen rollers (5) are at each end of cluster gear (3).

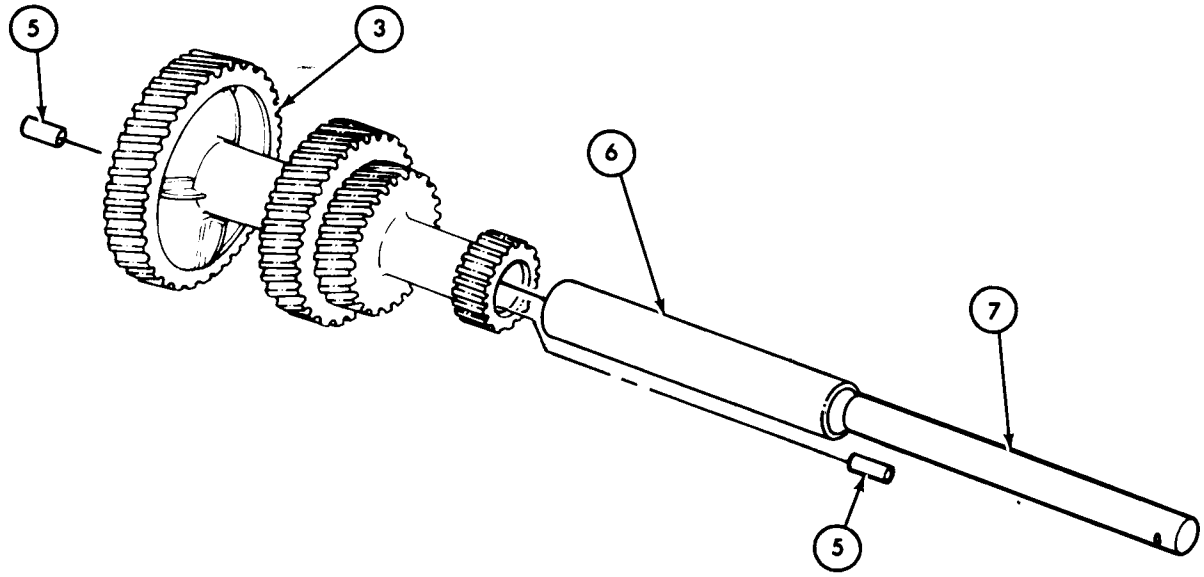

b. CLEANING, INSPECTION, AND REPAIR

NOTE

- Cleaning instructions are found in paragraph 7-6.
- Inspection and repair instructions are found in paragraph 7-7.

TA 156269

7-17. Transmission Countershaft Cluster Gear Maintenance (Cont'd)

STEP NO.	LOCATION	ITEM	ACTION	REMARKS
c. REASSEMBLY				
3.		Spacer (3) and remover replacer (4)	Install in cluster gear (2).	Lubricate bore of cluster gear (2) with GAA grease.
4.		Thirty-six roller bearings (1)	Install eighteen in each end of cluster gear (2).	Lubricate with GAA grease.

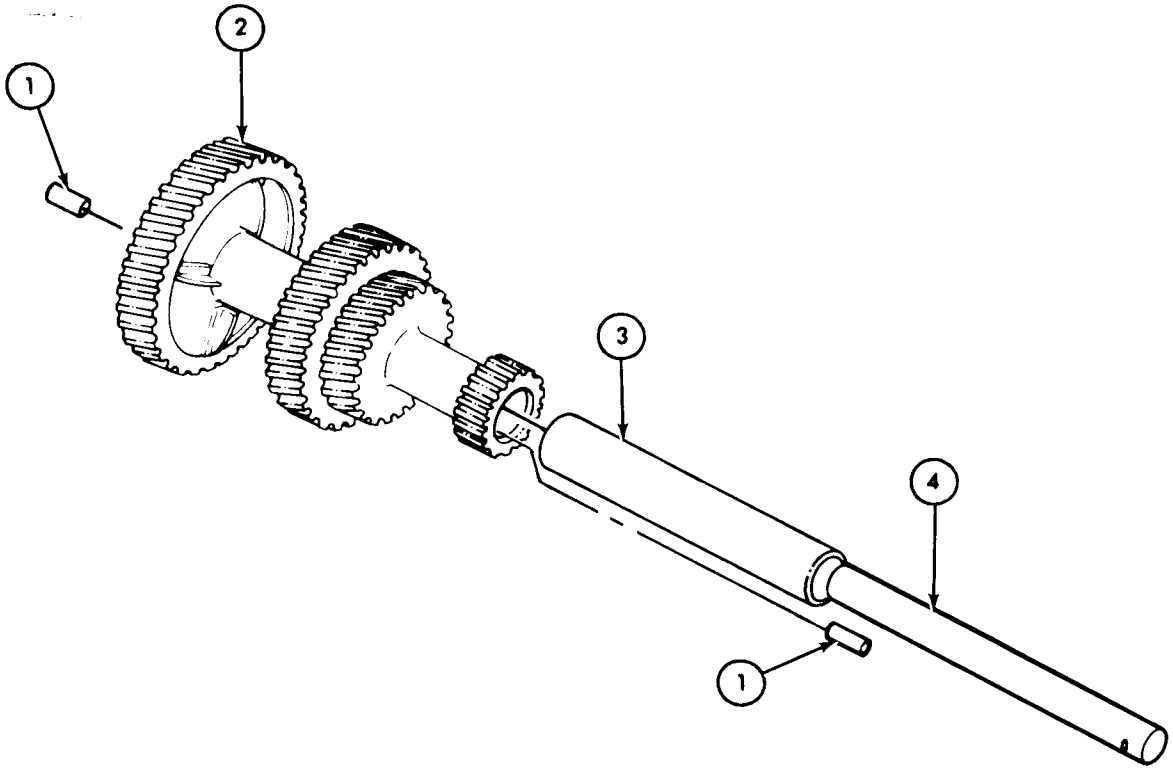

TA 156270

7-17. Transmission Countershaft Cluster Gear Maintenance (Cont'd)

STEP NO.	LOCATION	ITEM	ACTION	REMARKS
5.		Two new spacers (6)	Install in cluster gear (2).	Coat with GAA grease.
6.		New front thrust washer (5)	Install in cluster gear (2) with tang facing out.	Coat with GAA grease. Front thrust washer (5) is larger than rear thrust washer (7).
7.		New rear thrust washer (7)	Install in cluster gear (2) with tang facing out.	Coat with GAA grease.

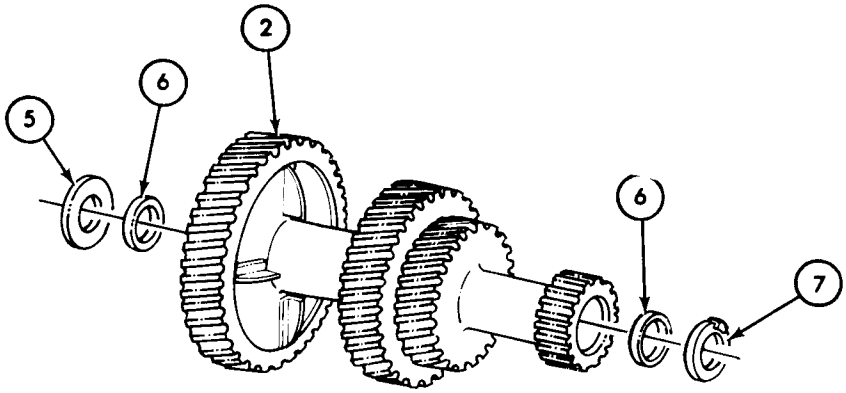

END OF TASK!

FOLLOW-ON TASK: Assemble transmission from subassemblies (para 7-21).

TA 156271

7-18. Front Output Shaft Maintenance

This task covers:

a. Disassembly
b. Cleaning, Inspection, and Repair
c. Reassembly

INITIAL SETUP:

Applicable Models
All

Equipment Condition Reference
Para 7-15

Condition Description
Transmission disassembled into subassemblies.

Test Equipment
None

Special Tools
Arbor press
Protector block
Transfer output shaft bearing driver

Special Environmental Conditions
Clean, well-ventilated work area.

Materials/Parts
Two snaprings

Personnel Required
One mechanic

General Safety Instructions
None

Manual References
TM 9-2320-218-34P

STEP NO.	LOCATION	ITEM	ACTION	REMARKS
	a. DISASSEMBLY			
1.	Shaft (2)	Two snaprings (1)	Remove from shaft (2).	Use snapring pliers. Discard snaprings (1).

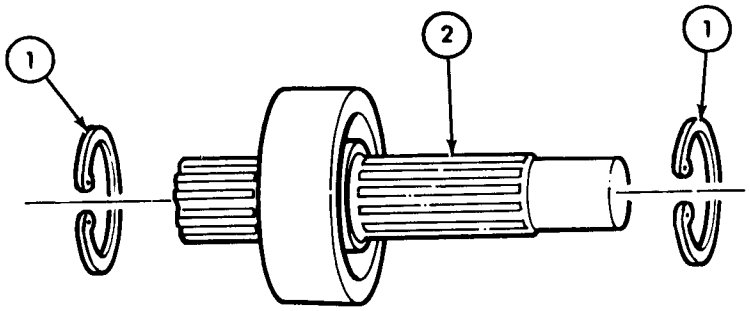

TA 156272

7-18. Front Output Shaft Maintenance (Cont'd)

STEP NO.	LOCATION	ITEM	ACTION	REMARKS
2.	Shaft (2)	Bearing (6)	*a.* Place in arbor press (3).	
			b. Place protector block (5) between shaft (2) and press ram (4).	
			c. Press bearing (6) from shaft (2).	

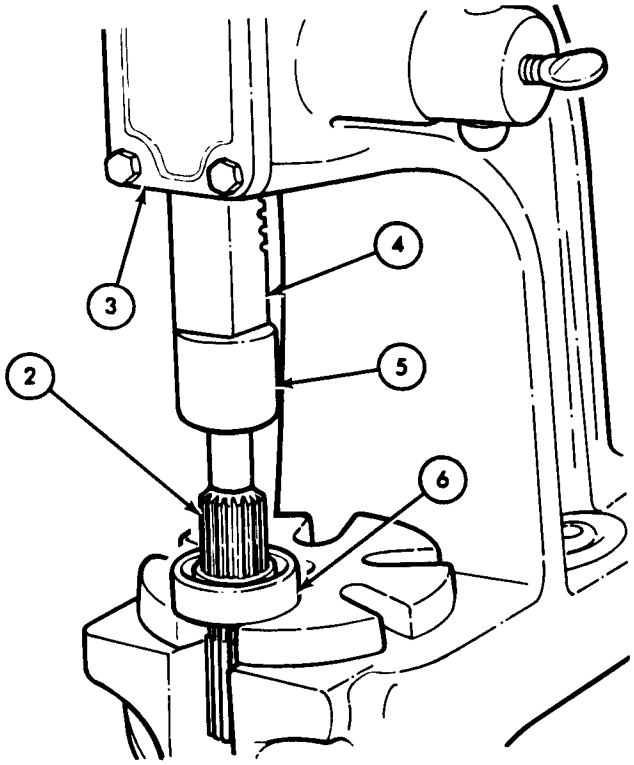

TA 156273

7-18. Front Output Shaft Maintenance (Cont'd)

STEP NO.	LOCATION	ITEM	ACTION	REMARKS

b. CLEANING, INSPECTION, AND REPAIR

NOTE

- Cleaning instructions are found in paragraph 7-6.
- Inspection and repair instructions are found in paragraph 7-7.

c. REASSEMBLY

3.		New front snapring (1)	Install in groove (2) of output shaft (6).
4.		Bearing (3)	*a.* Position on shaft (6). *b.* Place shaft (6) and bearing (3) in arbor press (5). *c.* Place driver plug (4) between bearing (3) and arbor press (5). *d.* Press bearing (3) on shaft (6) until seated against snapring (1).

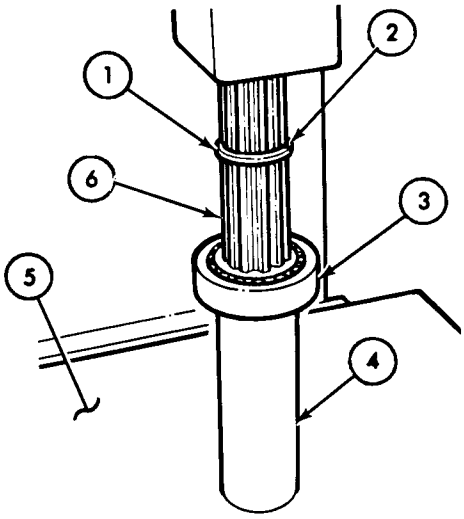

TA 156274

7-18. Front Output Shaft Maintenance (Cont'd)

STEP NO.	LOCATION	ITEM	ACTION	REMARKS
5.		New rear snapring (8)	Install in groove (7) of shaft (6).	Use snapring pliers.

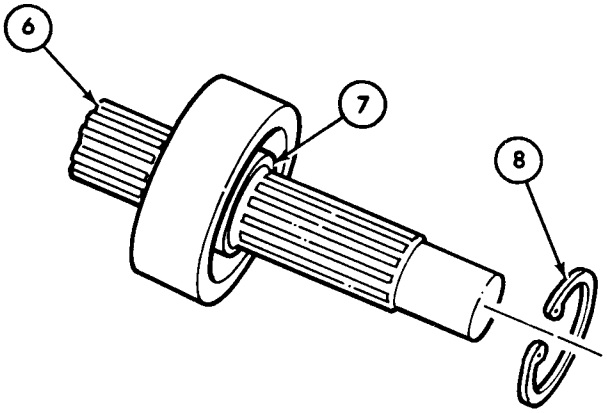

END OF TASK!

FOLLOW-ON TASK: Assemble transmission from subassemblies (para 7-21).

TA 156275

7-19. Transmission Output Shaft Assembly Maintenance

This task covers:

a. Disassembly
b. Cleaning, Inspection, and Repair
c. Reassembly

INITIAL SETUP:

Applicable Models
All

Equipment Condition Reference
Para 7-15

Condition Description
Transmission disassembled into subassemblies.

Test Equipment
None

Special Tools
None

Special Environmental Conditions
Clean, well-ventilated work area.

Materials/Parts
Four snaprings
GAA grease

Personnel Required
One mechanic

General Safety Instructions
None

Manual References
TM 9-2320-218-34P
LO 9-2320-218-12

STEP NO.	LOCATION	ITEM	ACTION	REMARKS
a. DISASSEMBLY				
		NOTE		
		Secure output shaft assembly in a holding fixture.		
1.	Output shaft asembly (5)	Snapring (1)	Remove.	Use snapring pliers. Discard snapring (1).

7-19. Transmission Output Shaft Assembly Maintenance (Cont'd)

STEP NO.	LOCATION	ITEM	ACTION	REMARKS
2.		Third- and fourth-speed synchronizer (3), fourth-speed blocker (2), and third-speed blocker (4)	Slide from output shaft (5).	Tag blockers (2) and (4) so they can be installed on same sides of synchronizer (3) as removed.
3.		Third-speed gear (6)	Slide from output shaft (5).	

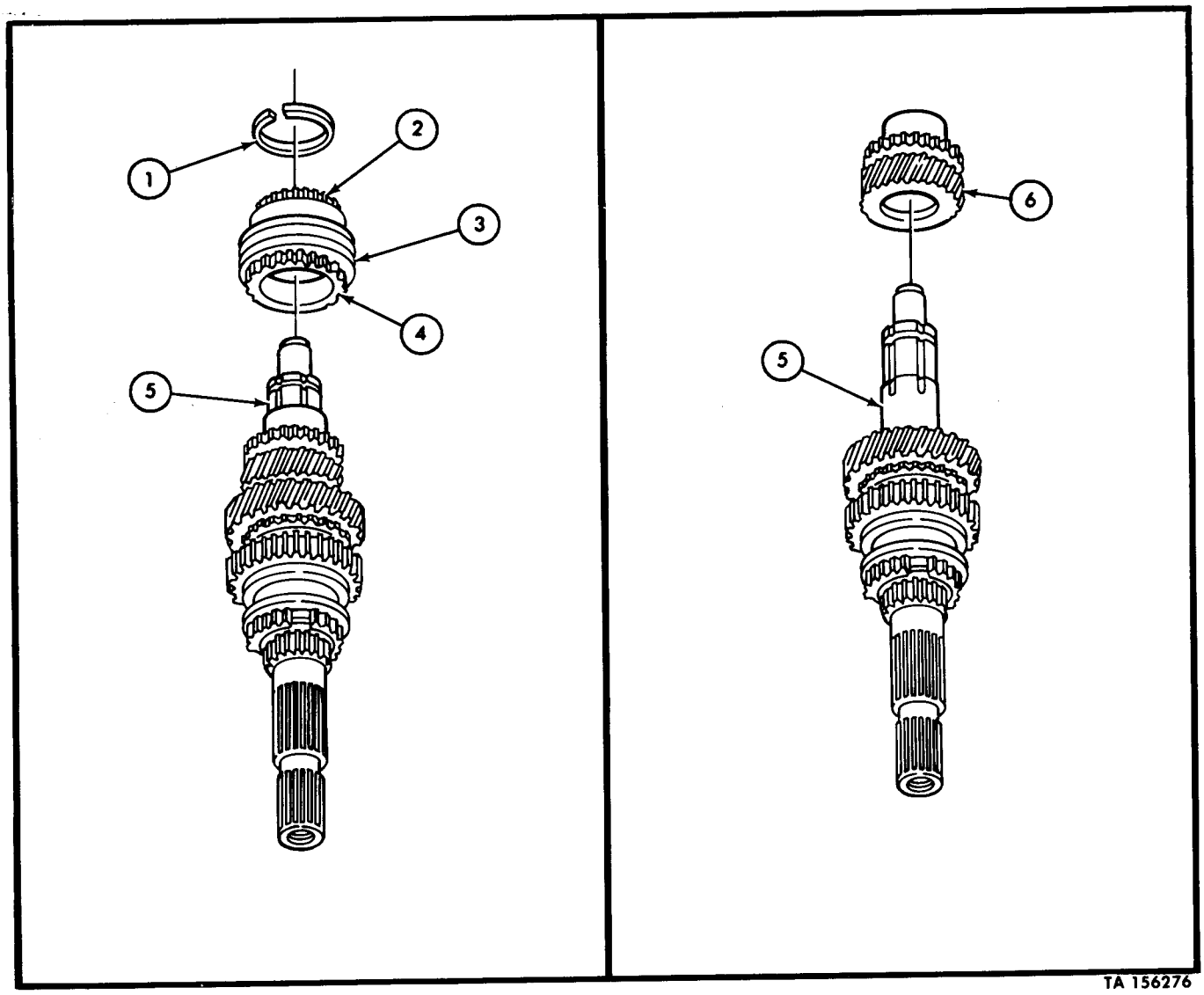

TA 156276

7-19. Transmission Output Shaft Assembly Maintenance (Cont'd)

STEP NO.	LOCATION	ITEM	ACTION	REMARKS
		NOTE		
		Invert shaft in fixture.		
4.	Output shaft (4)	First- and second-speed synchronizer snapring (1)	Remove.	Use snapring pliers. Discard snapring (1).
5.		First- and second-speed synchronizer (2) and blocker ring (3).	Slide from output shaft (4).	Keep blocker (3) with synchronizer (2).
6.	Output shaft (4)	Second-speed gear snapring (5)	Remove.	Use snapring pliers. Discard snapring (5).
7.		Thrust washer (6), second-speed gear (7), and thirty-seven roller bearings (8)	Slide from output shaft (4).	
8.	Output shaft (4)	Second-speed roller bearing retainer (9) and snapring (10)	Remove.	Use snapring pliers. Discard snapring (10).

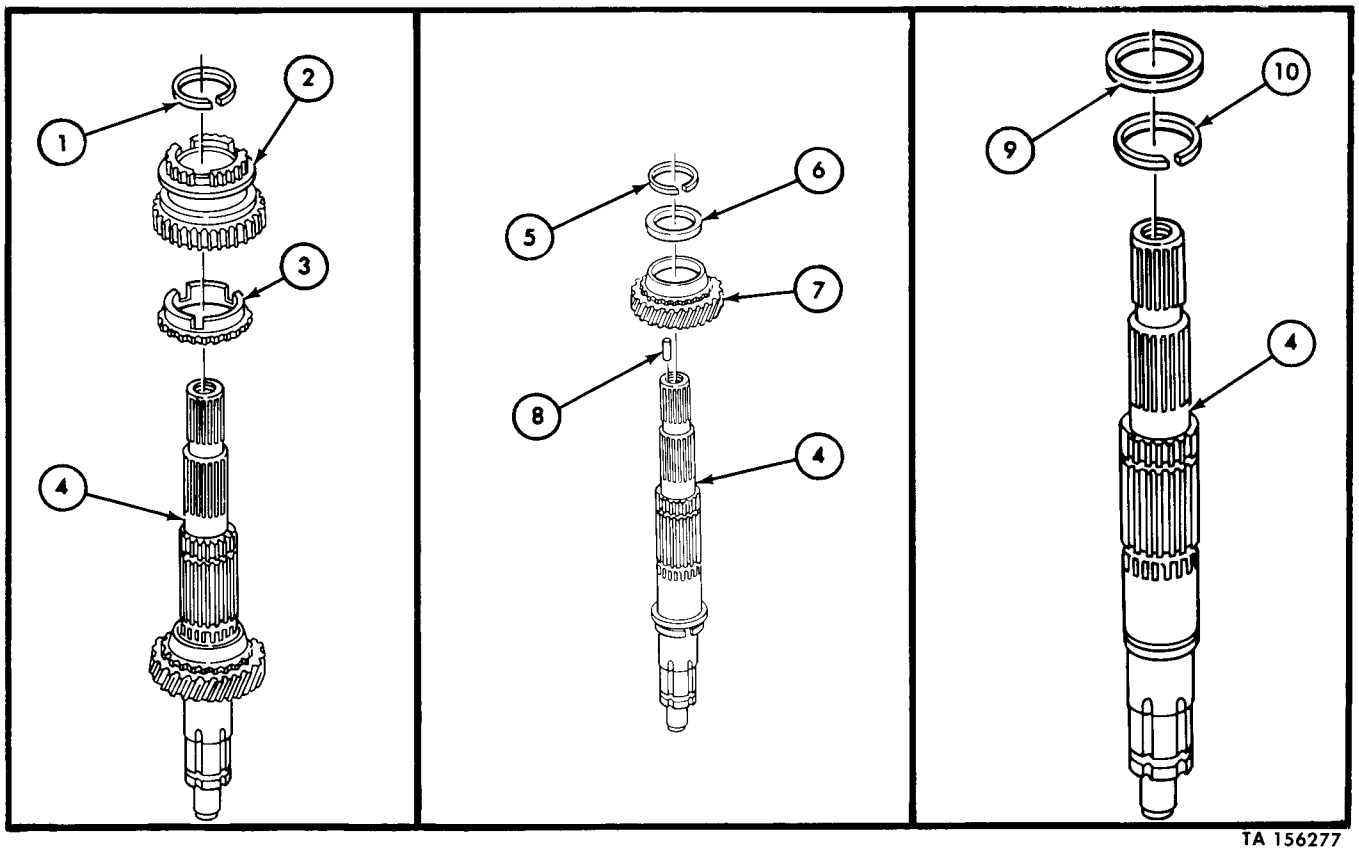

TA 156277

7-19. Transmission Output Shaft Assembly Maintenance (Cont'd)

STEP NO.	LOCATION	ITEM	ACTION	REMARKS
9.	Third- and fourth-speed transmission synchronizer sleeve (13)	Blocking rings (11) and (17)	Remove.	
10.		Clutch hub (15)	Slide from sleeve (13).	
11.	Clutch hub (15)	Three inserts (14)	Remove.	
12.	Transmission synchronizer sleeve (13)	Springs (12) and (16)	Remove.	

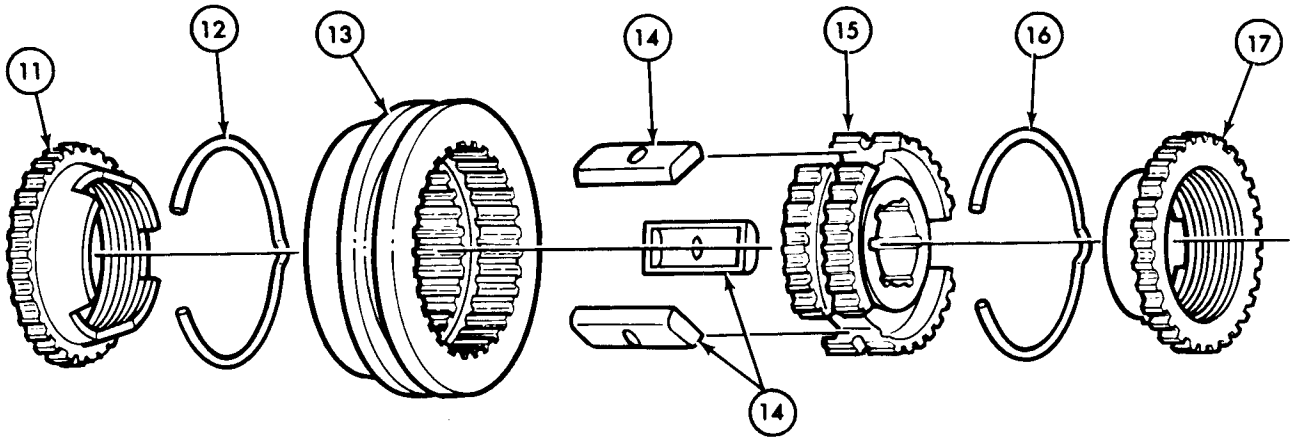

TA 156278

7-19. Transmission Output Shaft Assembly Maintenance (Cont'd)

STEP NO.	LOCATION	ITEM	ACTION	REMARKS
13.		Blocking ring (1)	Remove from hub (7) and gear (6).	
14.	First-speed gear (6)	Second-speed synchronizer hub (7)	Remove.	Do not lose three synchronizer balls (4). Retainer ring (5) is staked to hub (7).
15.	Second-speed synchronizer hub (7)	Three plates (2), balls (4), and springs (3)	Remove.	

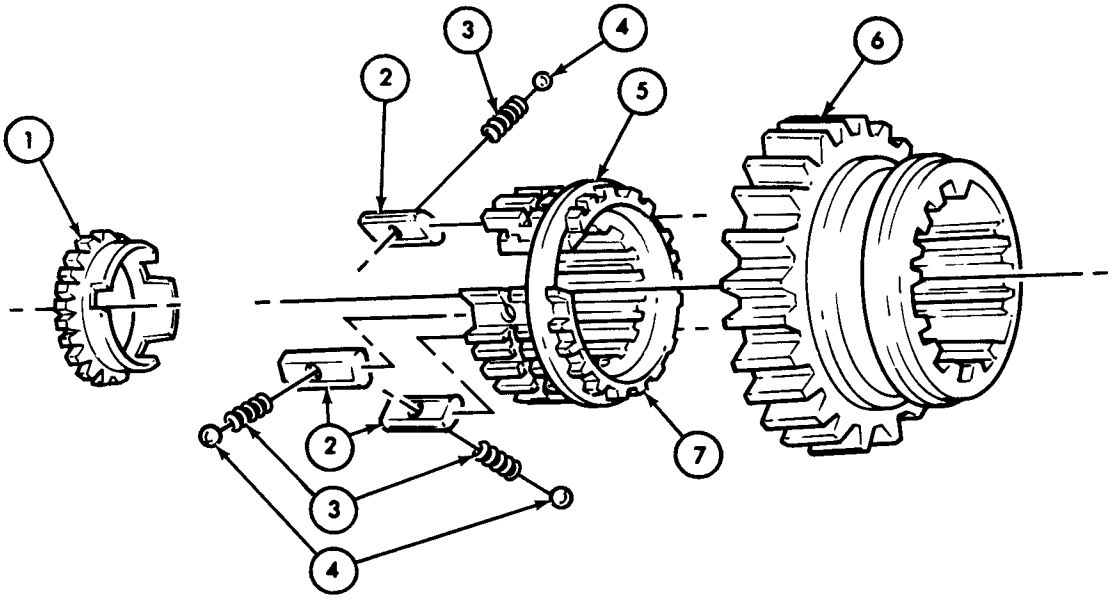

b. CLEANING, INSPECTION, AND REPAIR

NOTE

- Cleaning instructions are found in paragraph 7-6.
- Inspection and repair instructions are found in paragraph 7-7.

TA 156279

7-19. Transmission Output Shaft Assembly Maintenance (Cont'd)

STEP NO.	LOCATION	ITEM	ACTION	REMARKS
c. REASSEMBLY				
16.		Three hub plates (2) and springs (3)	*a.* Lubricate with GAA grease.	
			b. Install on second-speed synchronizer hub (7).	
17.		Three synchronizer balls (4)	Position on springs (3) in bores of plates (2).	
18.		First-speed gear (6)	*a.* Position on splines of hub (7).	First-speed gear (6) is installed on hub (7) with the flat surface (9) at the deep recessed end (8) of hub (7).
			b. Slide over three synchronizer balls (4).	
19.		Synchronizer blocking ring (1)	Aline slots to plates (2) in hub (7) and install.	

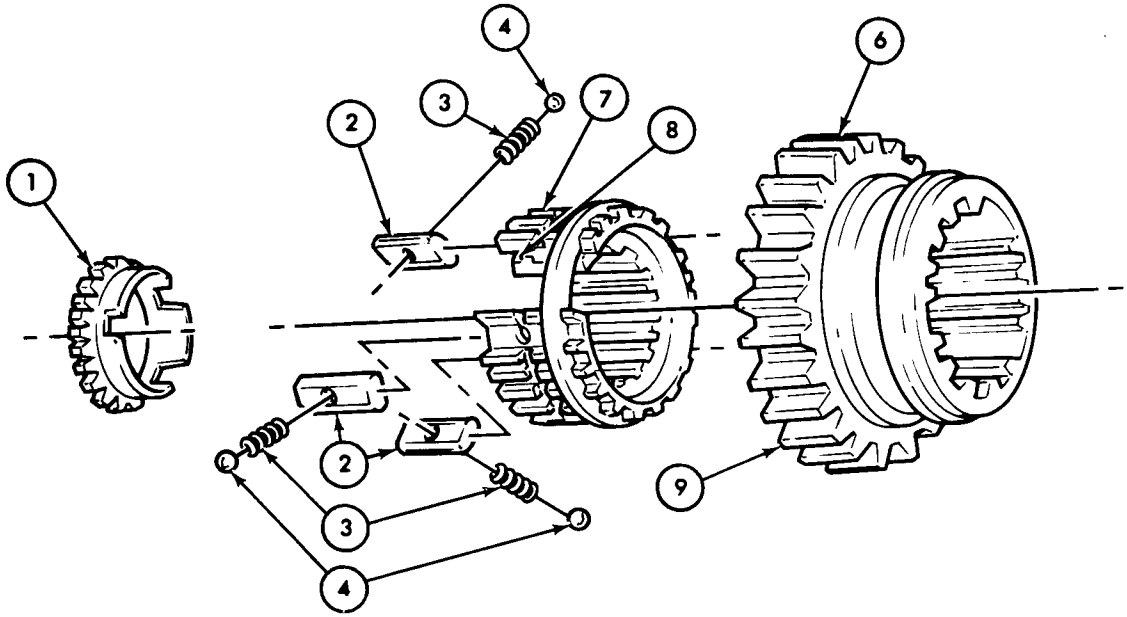

TA 156280

7-19. Transmission Output Shaft Assembly Maintenance (Cont'd)

STEP NO.	LOCATION	ITEM	ACTION	REMARKS
20.		Synchronizer sleeve (5)	Slide onto clutch hub (7).	Long neck (4) of sleeve (5) and deep neck (10) of hub (7) should face in same direction.
21.		Three inserts (6)	Place in slots (9) of hub (7) with open side (11) facing in.	
22.		Two retainer springs (2)	Install in hub (7) and three inserts (6).	Spring offsets (3) must be attached to open side (11) of same insert (6).
23.		Fourth-speed blocking ring (1)	Install on deep neck (10) of hub (7).	
24.		Third-speed blocking ring (8)	Install on rear side of hub (7).	

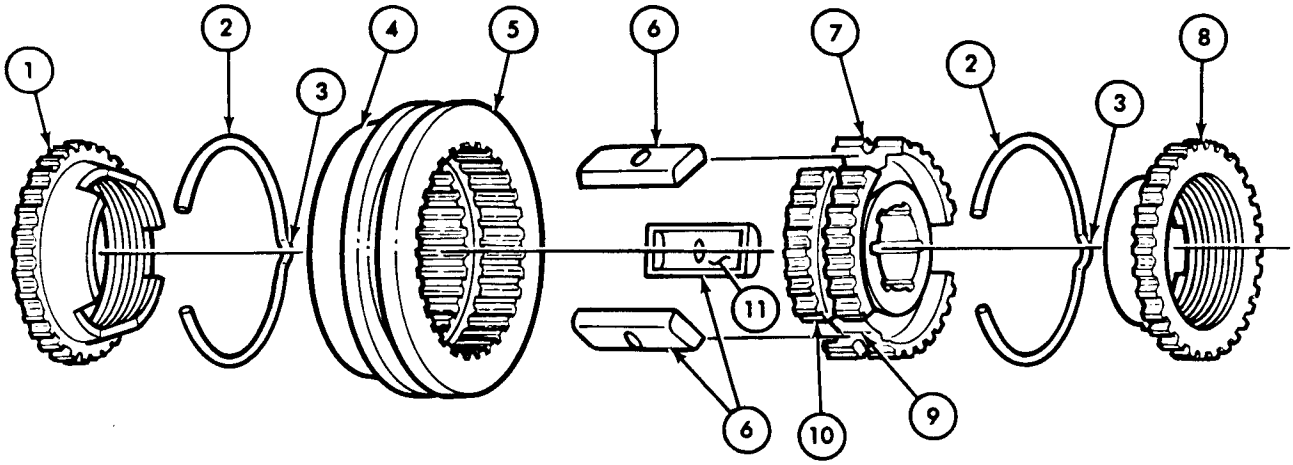

TA 156281

7-19. Transmission Output Shaft Assembly Maintenance (Cont'd)

STEP NO.	LOCATION	ITEM	ACTION	REMARKS

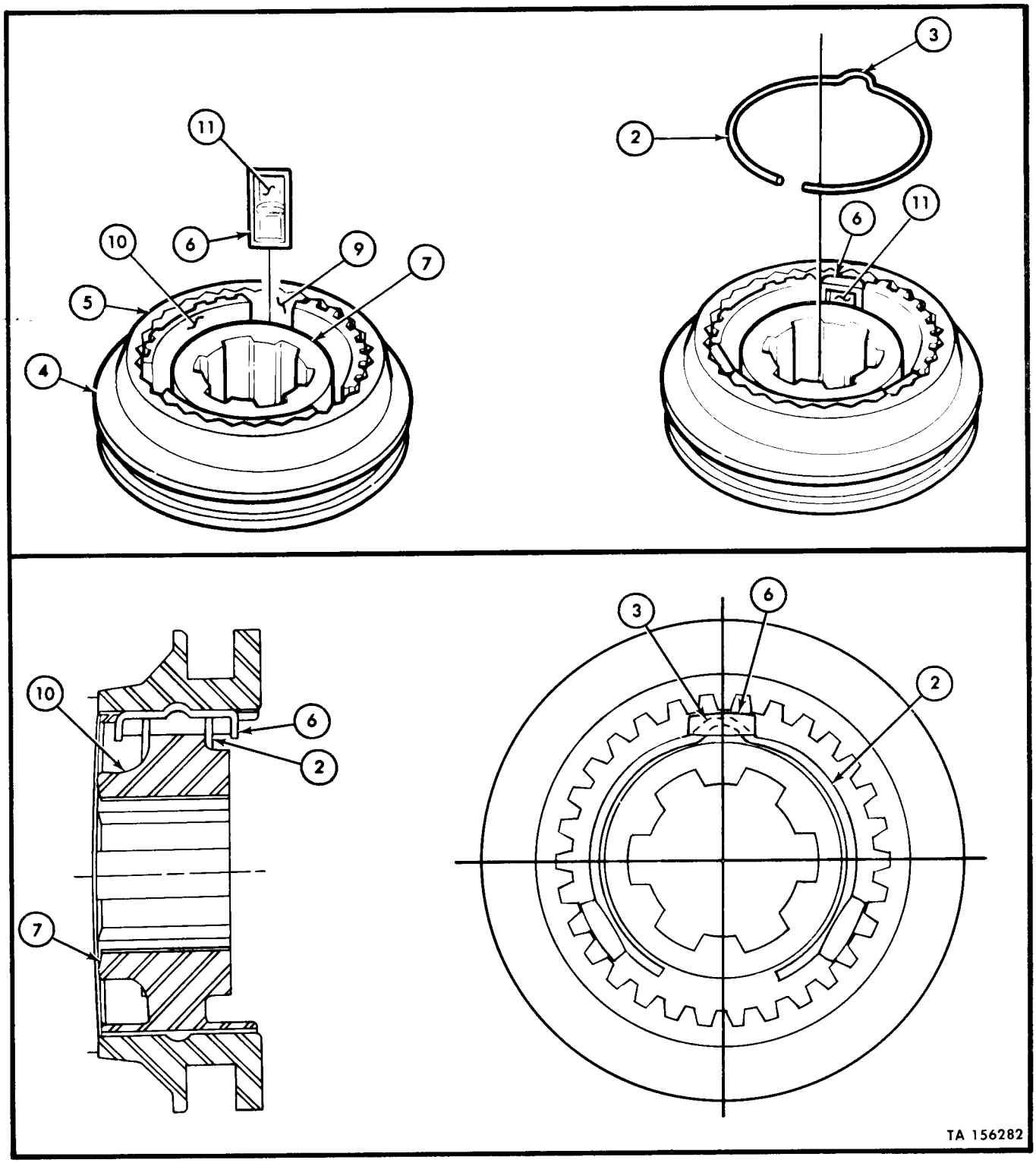

7-19. Transmission Output Shaft Assembly Maintenance (Cont'd)

STEP NO.	LOCATION	ITEM	ACTION	REMARKS
25.		New second-speed retaining snapring (2)	Install on output shaft (3) in groove (4).	Use snapring pliers. Stand front of output shaft (3) in fixture.
26.		Bearing retainer (1)	Slide on output shaft (3) to snapring (2).	
27.		Thirty-seven second-speed gear bearing rollers (6)	Place on output shaft (3) up to retainer (1).	Lubricate with GAA grease to hold in place.
28.		Second-speed gear (5)	*a.* Slide over bearing rollers (6). *b.* Rotate until rollers (6) are fully seated on shaft (3).	Make sure all bearing rollers (3) are in place.

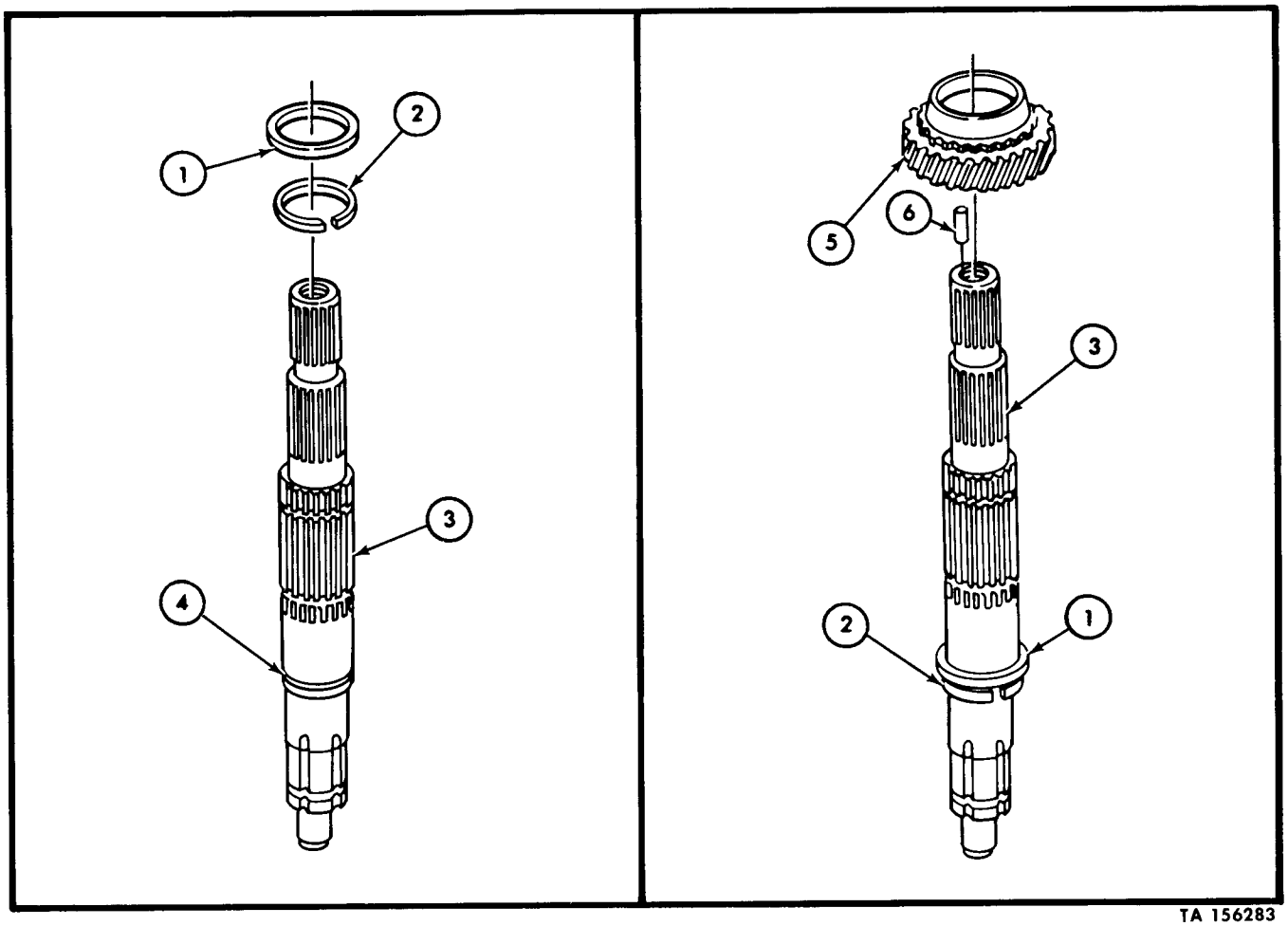

TA 156283

7-19. Transmission Output Shaft Assembly Maintenance (Cont'd)

STEP NO.	LOCATION	ITEM	ACTION	REMARKS
29.		Second-speed gear bearing spacer (8)	Install on output shaft (3) to second-speed gear needle bearings (9).	
30.		New second-speed gear retaining snapring (7)	Install on output shaft (3) behind bearing spacer (8).	Use snapring pliers. Make sure snapring (7) is fully seated.

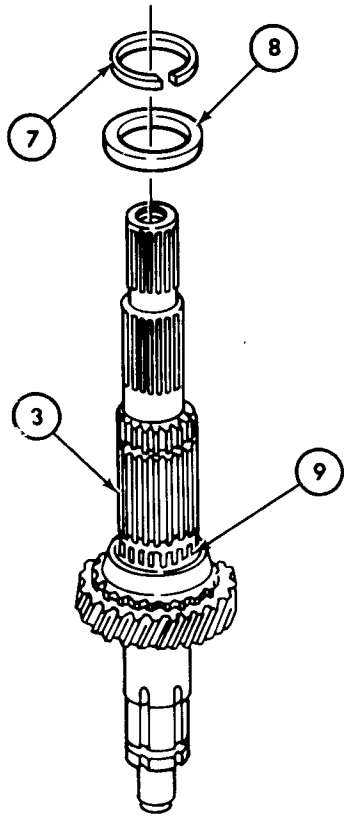

TA 156284

7-19. Transmission Output Shaft Assembly Maintenance (Cont'd)

STEP NO.	LOCATION	ITEM	ACTION	REMARKS
31.		First- and second-speed synchronizer blocking ring (4)	Slide on output shaft (5) to second-speed gear (6).	
32.		First- and second-speed synchronizer (3)	Install on output shaft (5) with collar end (2) facing out.	
33.		New first- and second-speed synchronizer retaining snapring (1)	Install on output shaft (5).	Use snapring pliers.

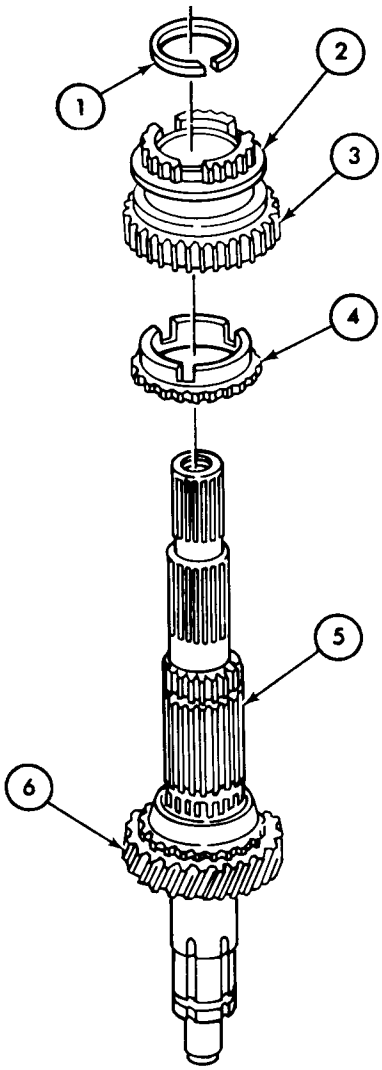

TA 156285

7-19. Transmission Output Shaft Assembly Maintenance (Cont'd)

STEP NO.	LOCATION	ITEM	ACTION	REMARKS
		NOTE		
		Invert shaft in fixture.		
34.		Third-speed gear (7)	Slide on output shaft (5) with flat surface of gear (7) facing second-speed gear (8).	Use turning motion.
35.		Fourth-speed blocker (10), third- and fourth-speed synchronizer (11), and third-speed blocker (12)	Slide on output shaft (5).	
36.		New snapring (9)	Install in groove (13) of output shaft (5).	Use snapring pliers. Make sure snapring (9) is fully seated in groove (13).

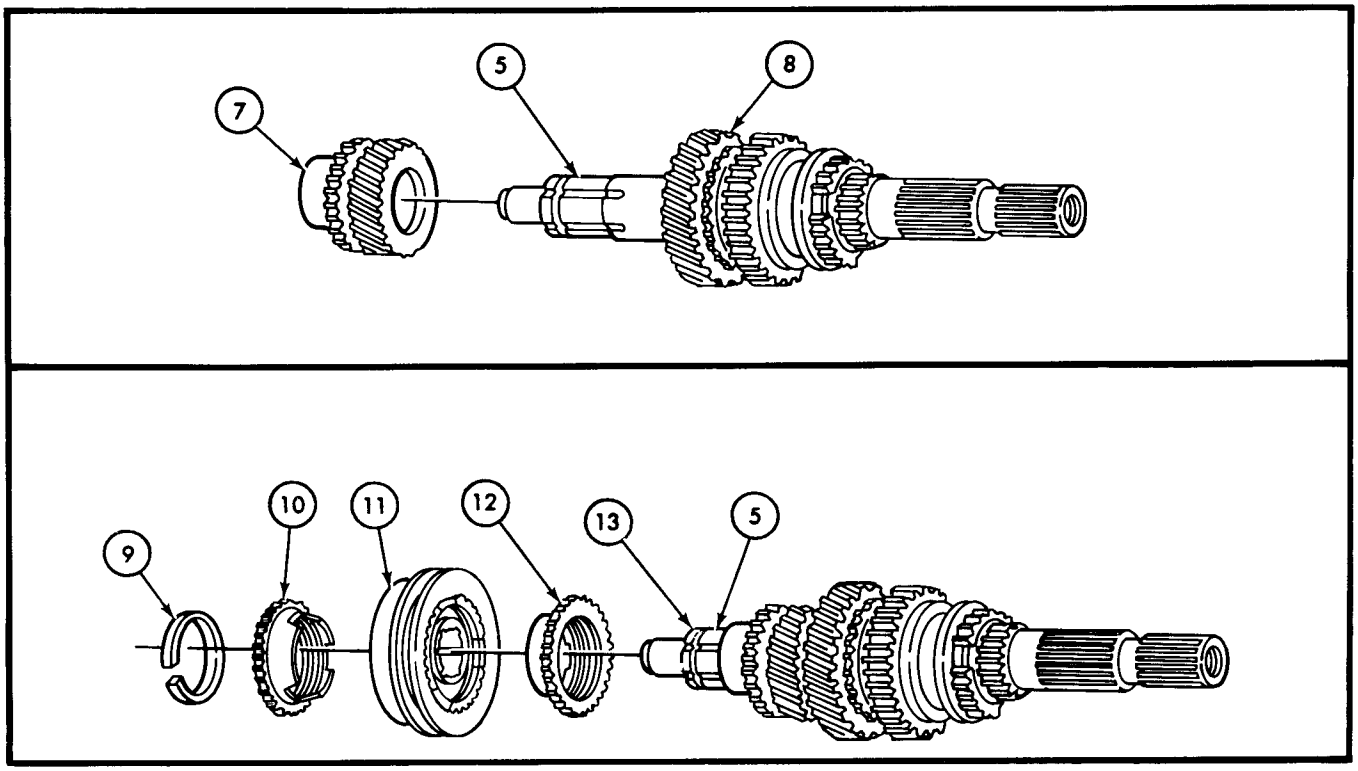

END OF TASK!

FOLLOW-ON TASK: Assemble transmission from subassemblies (para 7-21).

TA 156286

7-20. Transmission Gearshift Housing Maintenance

This task covers:
a. Disassembly
b. Cleaning, Inspection, and Repair
c. Reassembly

INITIAL SETUP:

Applicable Models	Equipment Condition Reference	Condition Description
All	Para 7-15	Transmission disassembled into subassemblies.

Test Equipment

None

Special Tools

Torque wrench (0-175 lb-ft)
Slide hammer

Special Environmental Conditions

Clean, well-ventilated work area.

Materials/Parts

Sealer (NSN 8030-00-543-4384)
GO 80-90 lubricant
GAA grease
Safety wire
Four expansion plugs
Cotter pin
Two interlock plungers

Personnel Required

One mechanic

General Safety Instructions

None

Manual References

TM 9-2320-218-34P
LO 9-2320-218-12

STEP NO.	LOCATION	ITEM	ACTION	REMARKS
a. DISASSEMBLY				
1.	Gearshift housing (1)	Relief valve (2)	Remove.	

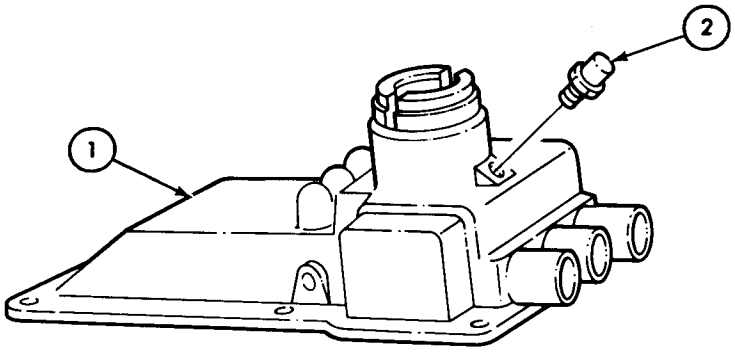

TA 156287

7-20. Transmission Gearshift Housing Maintenance (Cont'd)

STEP NO.	LOCATION	ITEM	ACTION	REMARKS
2.	Housing (1)	Four locking wires (6)	*a.* Remove from lockscrews (7) and (9).	Discard wires (6).
			b. Place shifter shafts (3), (4), and (5) in neutral position.	Three shifter gates (8) alined in neutral.
3.		Third- and fourth-speed shifter fork lockscrew (9)	*a.* Remove from third and fourth shifter fork (10).	
			b. Slide third and fourth shifter fork (10) from shifter shaft (4).	
4.		Three lockscrews (7)	Remove from shifter gates (8).	

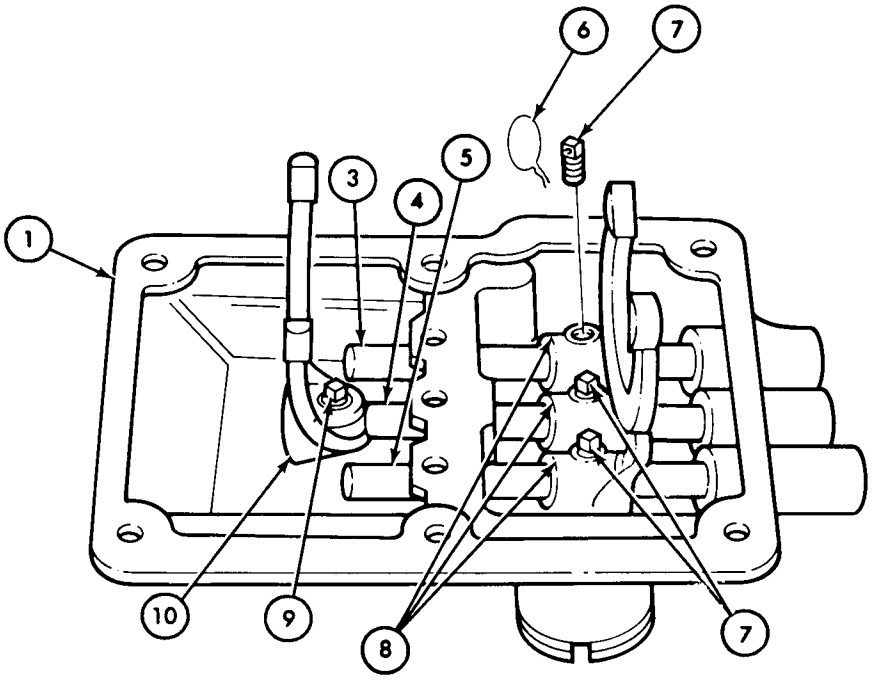

TA 156288

7-20. Transmission Gearshift Housing Maintenance (Cont'd)

STEP NO.	LOCATION	ITEM	ACTION	REMARKS
		NOTE		
		Detent ball is spring loaded in housing. Do not lose when shaft is removed from housing.		
5.	Housing (1)	Third- and fourth-speed shifter shaft (5) and expansion plug (6)	Tap forward until shaft (5) is clear of bridge (7).	Discard plug (6).
6.		Ball (3) and spring (2)	Remove from bridge (7).	
7.		Third- and fourth-speed shifter shaft (5)	Tap forward and remove from housing (1).	Tag for identification.
8.		Third- and fourth-speed shifter gate (4).	Lift out and remove from housing (1).	

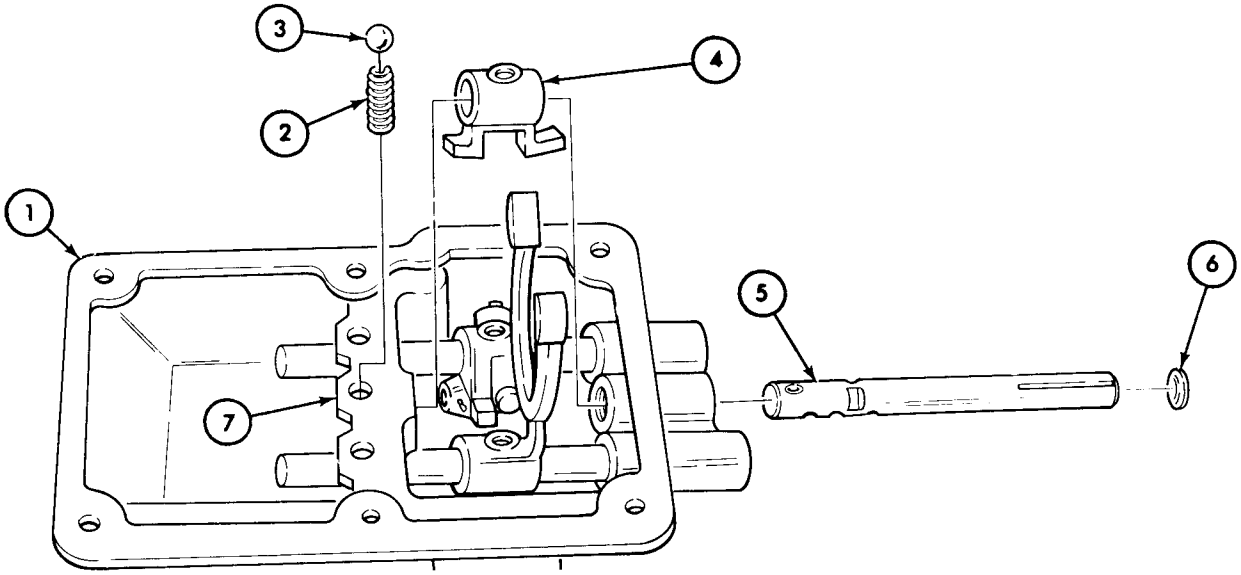

CAUTION

Make sure interlock pin (9) is not misplaced or lost.

9.		Interlock pin (9)	Slide out from bore (8) of shaft (5) and remove.	Use small pin punch.

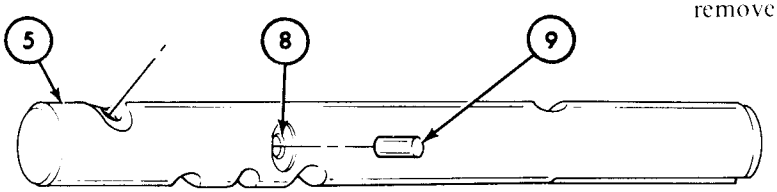

TA 156289

7-20. Transmission Gearshift Housing Maintenance (Cont'd)

STEP NO.	LOCATION	ITEM	ACTION	REMARKS
		NOTE		
		Detent ball is spring loaded in housing. Do not lose when shaft is removed from housing.		
10.	Housing (1)	First and second shifter shaft (13), fork (12), and expansion plug (14)	Tap forward until shaft (13) is clear of bridge (7).	Discard plug (14).
11.		Ball (11) and spring (10)	Remove from bridge (7).	
12.		First- and second-speed shifter shaft (13)	Tap forward and remove from housing (1).	Tag for identification.
13.		Shifter fork (12)	Lift out and remove from housing (1).	

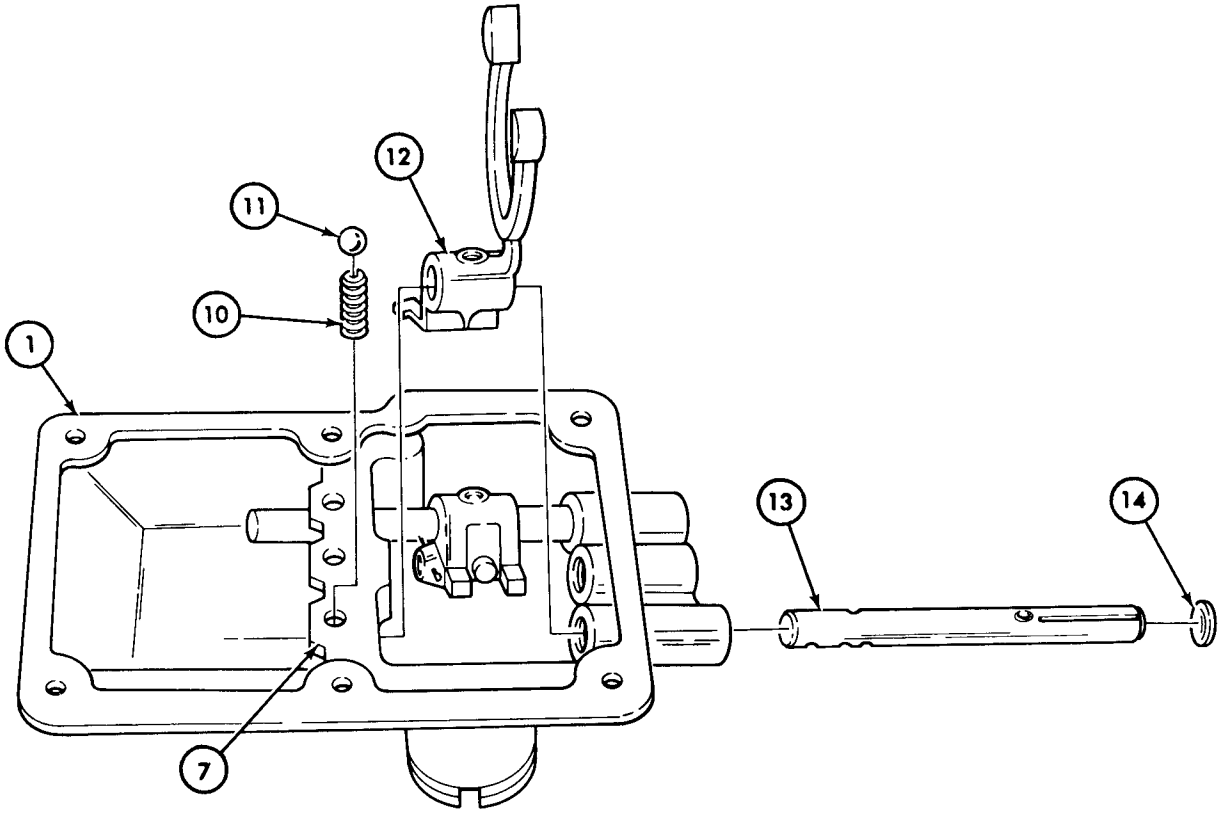

TA 156290

7-20. Transmission Gearshift Housing Maintenance (Cont'd)

STEP NO.	LOCATION	ITEM	ACTION	REMARKS
		NOTE		
		Detent ball is spring loaded in housing. Do not lose when shaft is removed from housing.		
14.	Housing (1)	Reverse shifter shaft (5), gate (4), and plug (6)	Tap forward until shaft (5) is clear of bridge (7).	Discard plug (6).
15.		Ball (3) and spring (2)	Remove from bridge (7).	
16.		Reverse shifter shaft (5)	Tap forward and remove from housing (1).	Tag for identification.
17.		Reverse shifter shaft gate (4)	Lift out and remove from housing (1).	

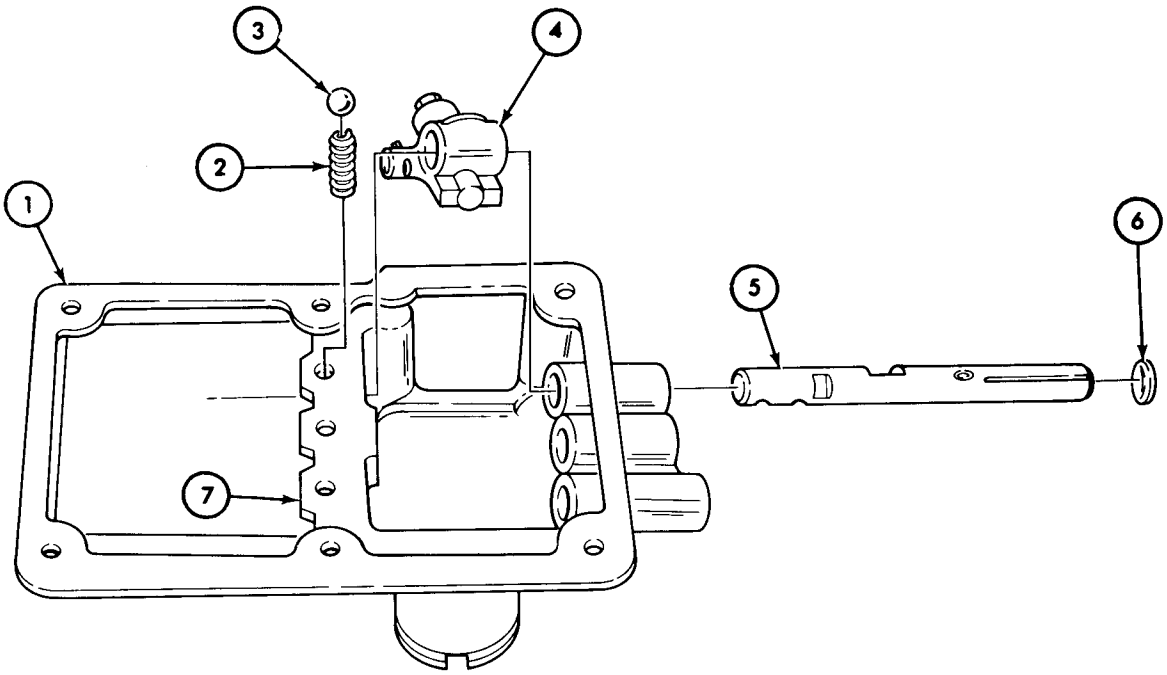

TA 156291

7-20. Transmission Gearshift Housing Maintenance (Cont'd)

STEP NO.	LOCATION	ITEM	ACTION	REMARKS
18.	Housing (1)	Expansion plug (10) and two interlock plungers (8) and (9)	*a.* Drill small hole in center of plug (10).	
			b. Install a self-tapping screw (12).	
			c. Attach slide hammer (11) to screw (12).	
			d. Remove plug (10) from bore (13) of housing (1).	Discard plug (10).
			e. Slide plungers (8) and (9) from bore (13) of housing (1).	Discard plungers (8) and (9).

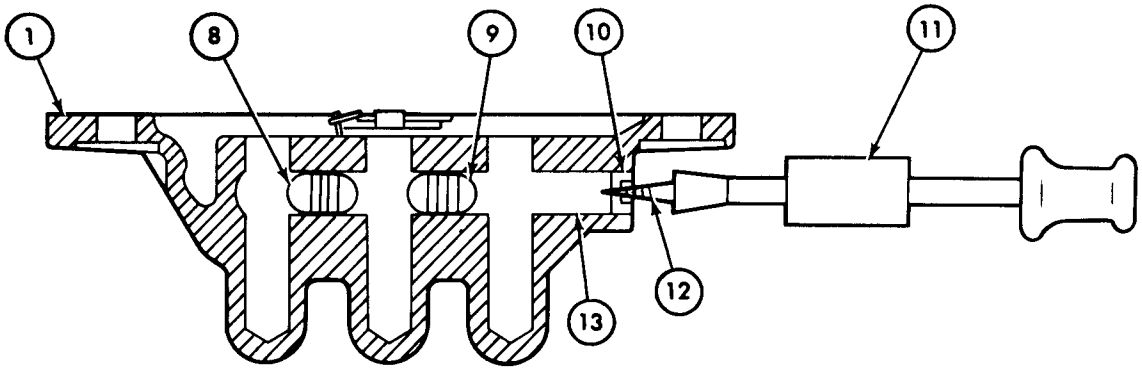

TA 156292

7-20. Transmission Gearshift Housing Maintenance (Cont'd)

STEP NO.	LOCATION	ITEM	ACTION	REMARKS
19.		Cotter pin (6)	Remove.	Discard cotter pin (6).
		NOTE		
		Spring (5) has internal spring which will be removed during cleaning.		
20.		Spring (5) and ball (4)	Remove from gate (1).	
21.	Reverse shifter shaft gate (1)	Plunger (3), spring (2), and clip (7)	*a.* Remove clip (7). *b.* Remove plunger (3) and spring (2) from gate (1).	

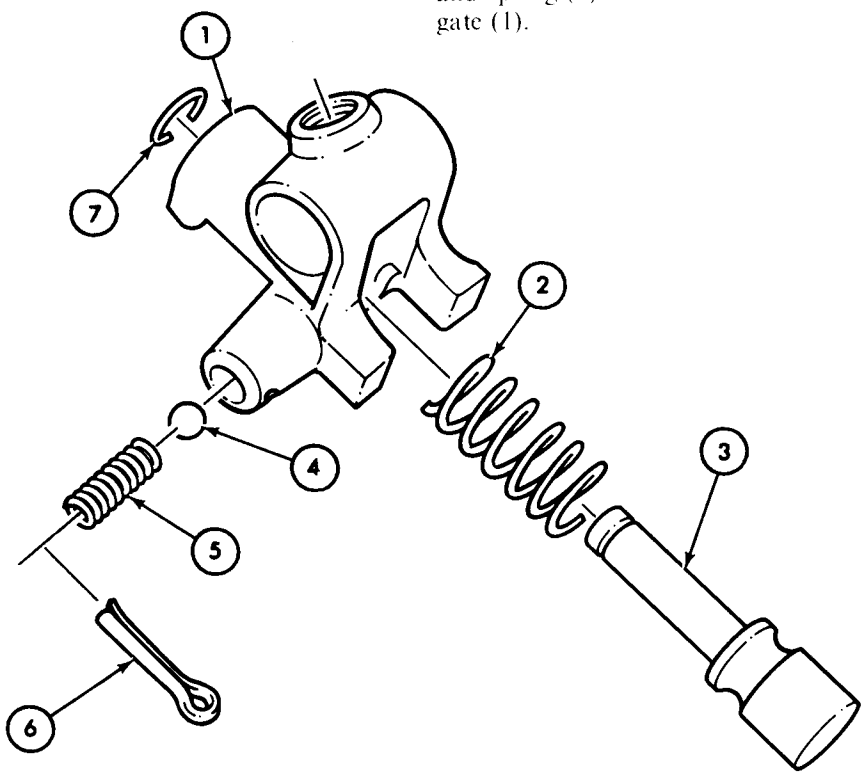

TA 156293

b. CLEANING, INSPECTION, AND REPAIR

NOTE

- Cleaning instructions are found in paragraph 7-6.
- Inspection and repair instructions are found in paragraph 7-7.

7-20. Transmission Gearshift Housing Maintenance (Cont'd)

STEP NO.	LOCATION	ITEM	ACTION	REMARKS
c. REASSEMBLY				
22.		Spring (2) and plunger (3)	*a.* Lubricate plunger (3) with GO 80-90 lubricant. *b.* Install in bore of reverse shifter shaft gate (1).	
23.		Clip (7)	Install in groove of plunger (3).	
24.		Ball (4), spring (5), and spring (8)	*a.* Install in bore of shifter shaft gate (1). *b.* Compress springs (5) and (8).	
25.		New cotter pin (6)	Install in reverse shifter shaft gate (1) and bend ends back.	

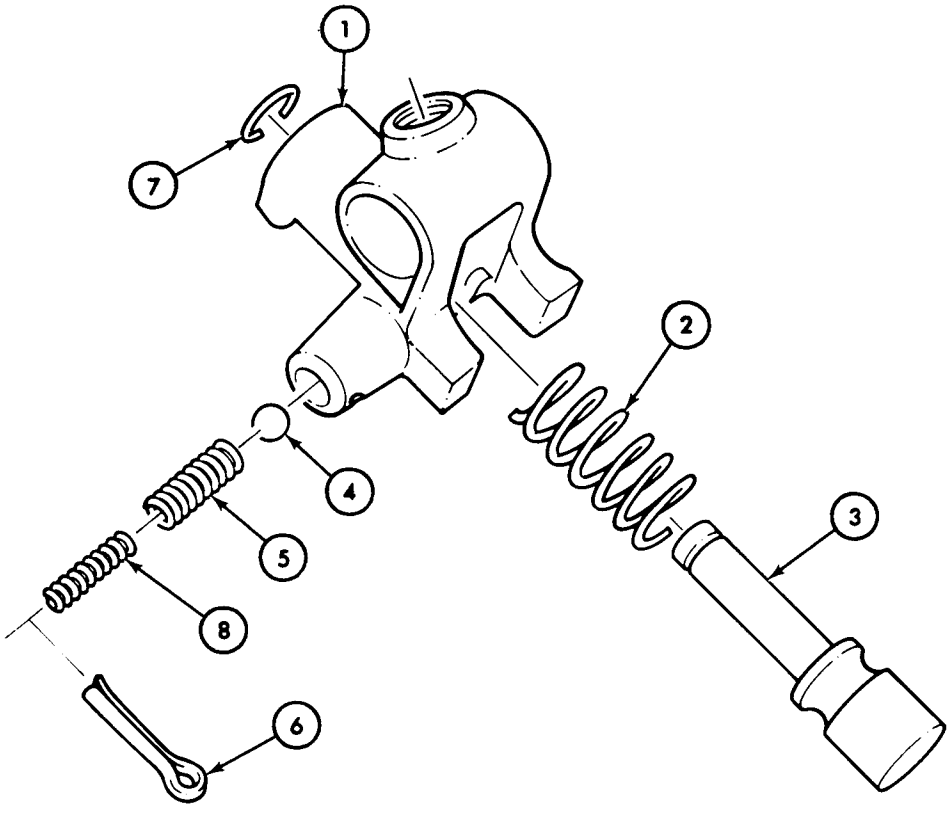

TA 156294

7-20. Transmission Gearshift Housing Maintenance (Cont'd)

STEP NO.	LOCATION	ITEM	ACTION	REMARKS
26.	Gearshift housing (1)	Two new interlock plungers (5) and (6)	*a.* Lubricate and slide into bore (8) of housing (1).	Use GO 80-90 lubricant.
			b. Insert plunger (5) between first and second shaft bore (2) and third and fourth shaft bore (3).	
			c. Insert plunger (6) between reverse shaft bore (4) and third and fourth shaft bore (3).	
27.		New expansion plug (7)	Install in bore (8) of shift housing (1).	Coat outside of plug (7) with sealer.

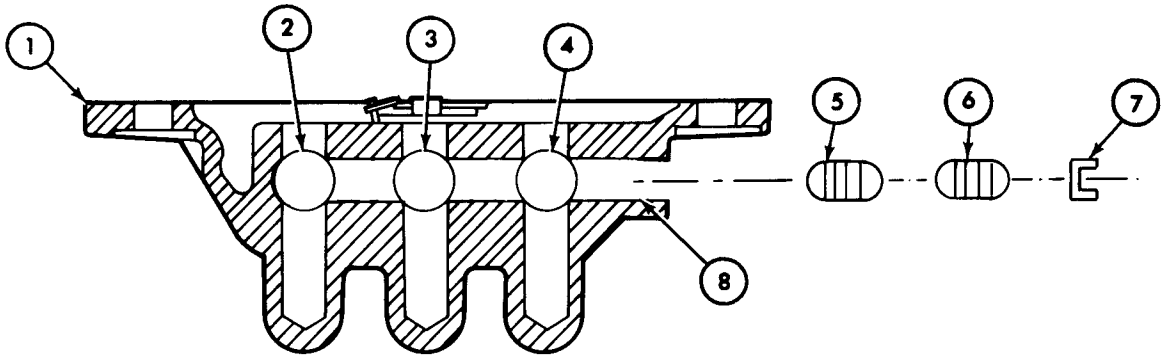

TA 156295

7-20. Transmission Gearshift Housing Maintenance (Cont'd)

STEP NO.	LOCATION	ITEM	ACTION	REMARKS
28.		Reverse shifter shaft (15)	Start into bore (13) of housing (1).	Slot (14) must face outward, and recess (16) inward.
29.		Reverse shifter shaft gate (12)	Position in gearshift housing (1).	
30.		Reverse shifter shaft (15)	Slide through shifter gate (12) to bridge (9).	
31.		Detent spring (10) and ball (11)	*a.* Install in bridge (9). *b.* Depress and slide shaft (15) through bore (2) in bridge (9) until plunger (5) engages recess (16).	

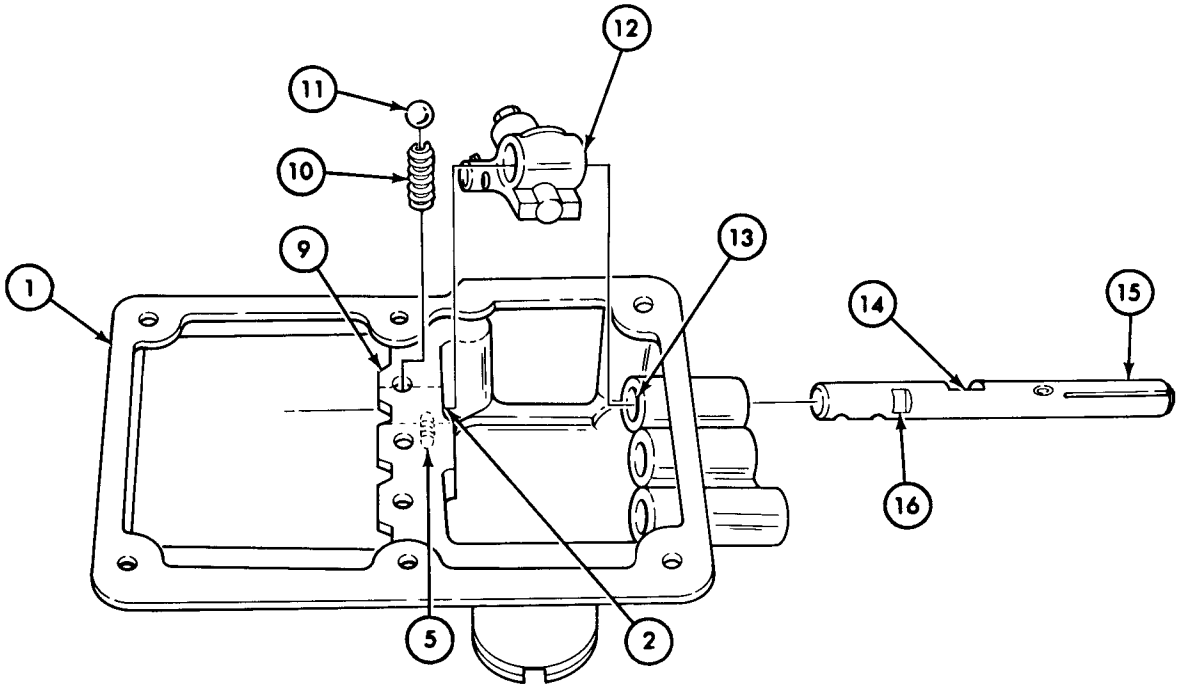

TA 156296

7-20. Transmission Gearshift Housing Maintenance (Cont'd)

STEP NO.	LOCATION	ITEM	ACTION	REMARKS
32.		Interlock pin (3)	Install in bore (2) of third and fourth shifter shaft (1).	Lubricate pin (3) with GAA grease.

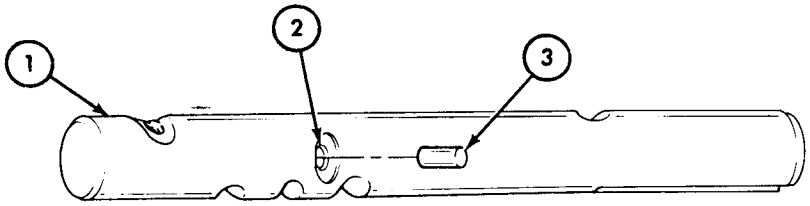

33.		Third and fourth shifter shaft (1)	Start into bore (10) of of housing (4).	Lockscrew recess (11) must face upward.
34.		Shifter shaft gate (9)	Position in gearshift housing (4).	
35.		Third and fourth shifter shaft (1)	Slide through shifter shaft gate (9) to bridge (15).	
36.		Detent spring (7) and ball (8)	*a.* Install in bridge (15). *b.* Depress and slide shaft (1) through bore (14) in bridge (15) until plunger (16) engages recess (13).	
37.		Shifter fork (5)	Slide on end of shaft (1) and aline lockscrew bore (6) with lockscrew recess (11) in shaft (1).	Make sure lockscrew recess (12) in shaft (1) alines with lockscrew bore in shifter shaft gate (9).

TA 156297

7-20. Transmission Gearshift Housing Maintenance (Cont'd)

STEP NO.	LOCATION	ITEM	ACTION	REMARKS

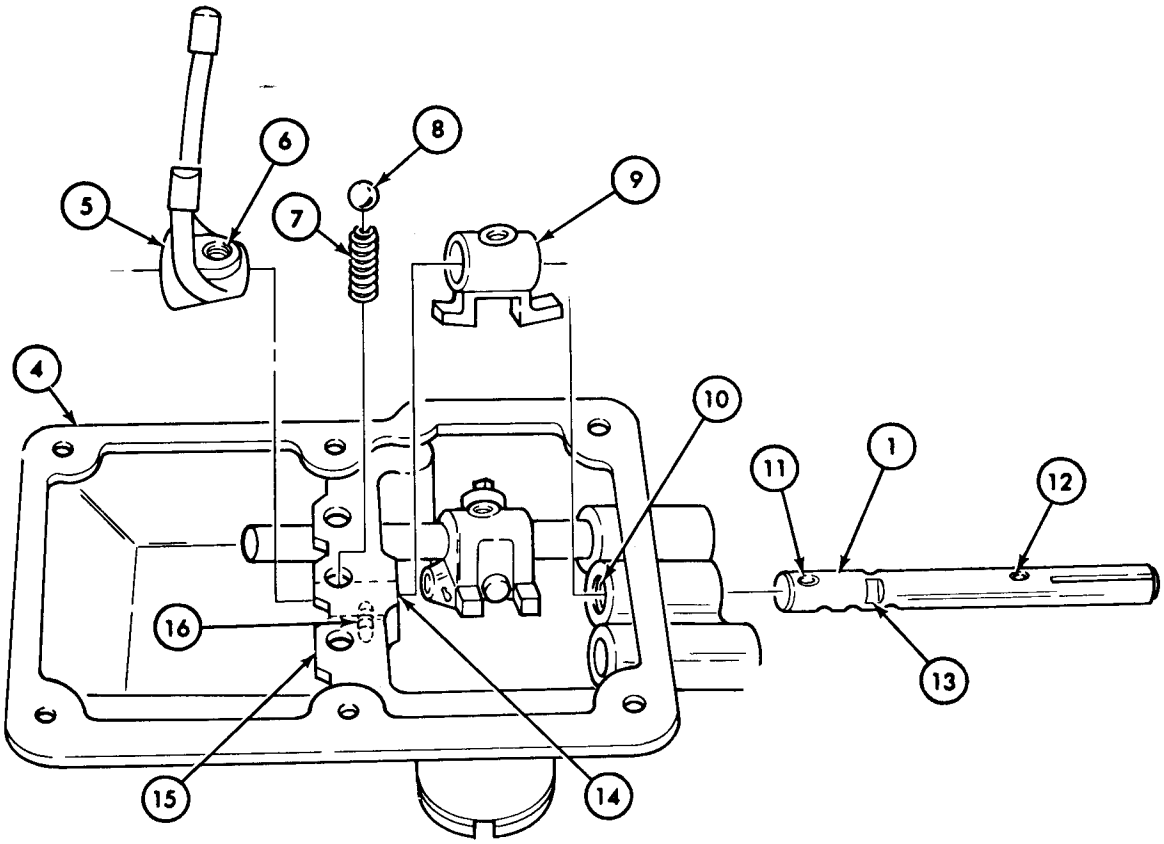

TA 156298

7-20. Transmission Gearshift Housing Maintenance (Cont'd)

STEP NO.	LOCATION	ITEM	ACTION	REMARKS
38.		First- and second-speed shifter shaft (8)	Start into bore (7) of housing (1).	Recess (9) must face inward.
39.		First- and second-speed shifter fork (6)	Position in gearshift housing (1).	
40.		First- and second-speed shifter shaft (8)	Slide through shifter fork (6) to bridge (12).	
41.		Detent spring (3) and ball (4)	*a.* Install in bridge (12).	
			b. Depress detent ball (4) and slide shaft (8) through bore (11) in bridge (12) until plunger (2) engages recess (9).	Aline lockscrew recess (10) in shaft (8) with lockscrew bore (5) in shifter fork (6).

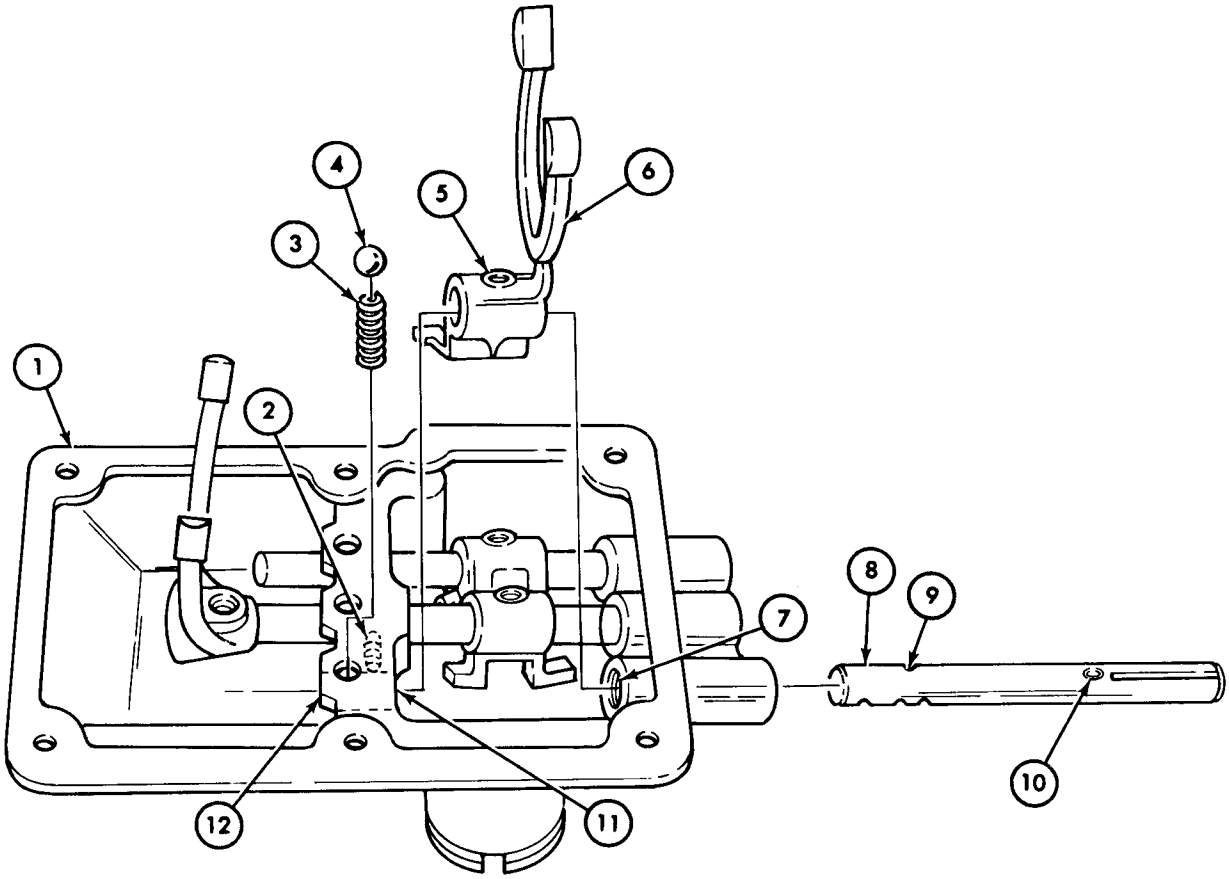

TA 156299

7-20. Transmission Gearshift Housing Maintenance (Cont'd)

STEP NO.	LOCATION	ITEM	ACTION	REMARKS
38.		First- and second-speed shifter shaft (8)	Start into bore (7) of housing (1).	Recess (9) must face inward.
39.		First- and second-speed shifter fork (6)	Position in gearshift housing (1).	
40.		First- and second-speed shifter shaft (8)	Slide through shifter fork (6) to bridge (12).	
41.		Detent spring (3) and ball (4)	*a.* Install in bridge (12).	
			b. Depress detent ball (4) and slide shaft (8) through bore (11) in bridge (12) until plunger (2) engages recess (9).	Aline lockscrew recess (10) in shaft (8) with lockscrew bore (5) in shifter fork (6).

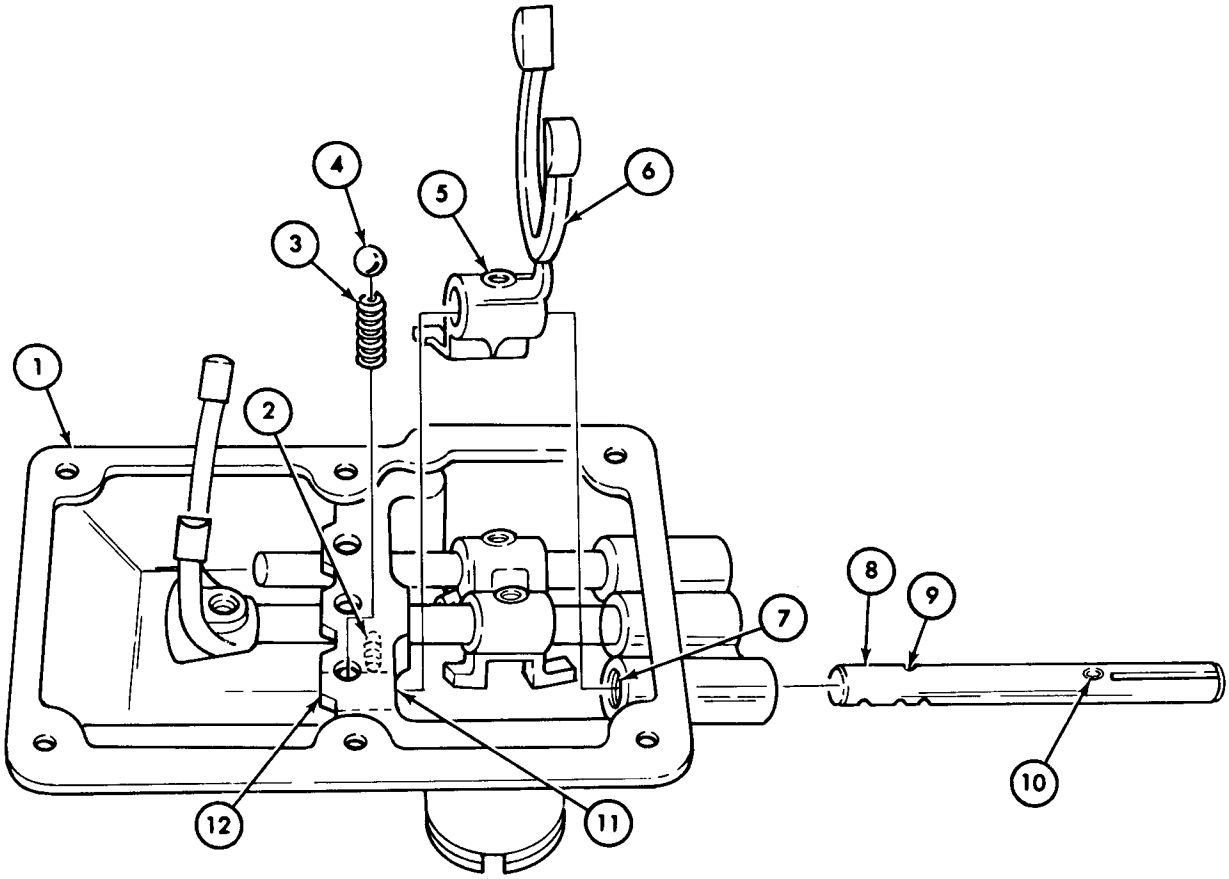

TA 156299

7-20. Transmission Gearshift Housing Maintenance (Cont'd)

STEP NO.	LOCATION	ITEM	ACTION	REMARKS
42.		Four lockscrews (17), (18), (19), and (20)	Install into shifter forks (13) and (6), and shifter shaft gates (15) and (14), and secure.	Tighten 12-15 lb-ft (16-20 N•m). Tighten lockscrew (18) before lockscrew (19).
43.		Four new locking wires (16)	Install one in each lockscrew (17), (18), (19), and (20), and secure around its shaft.	

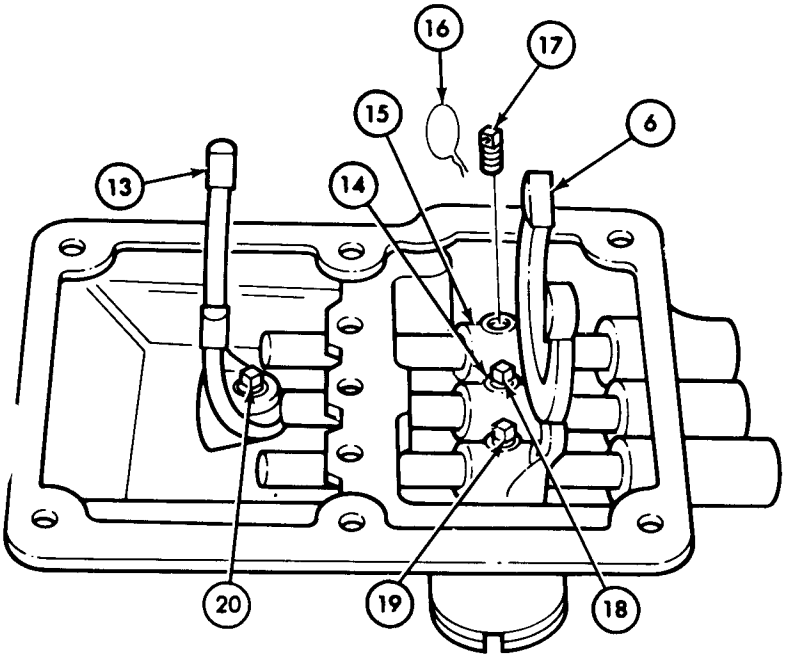

TA 156300

7-20. Transmission Gearshift Housing Maintenance (Cont'd)

STEP NO.	LOCATION	ITEM	ACTION	REMARKS
44.		Three expansion plugs (2)	*a.* Coat outer circumference with sealer.	Use a light coating of sealer.
			b. Secure into each bore (5) of housing (1) using a flat-face drift punch (3) and mallet (4).	Raised side of plug (2) faces out.

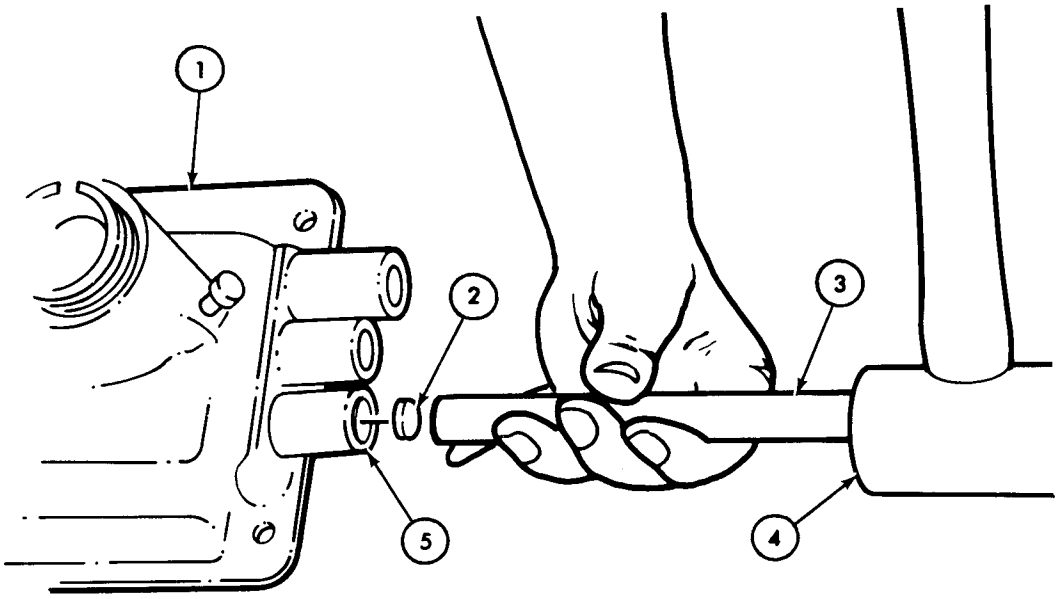

TA 156301

7-20. Transmission Gearshift Housing Maintenance (Cont'd)

STEP NO.	LOCATION	ITEM	ACTION	REMARKS
45.		Relief valve (6)	*a.* Apply light coat of sealer to threads.	
			b. Install in housing (1).	Tighten 6-8 lb-ft (8-11 N•m).

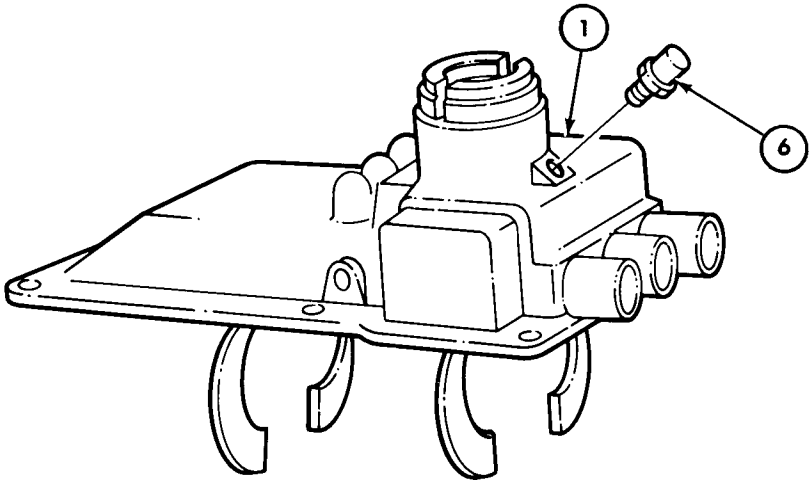

END OF TASK!

FOLLOW-ON TASK: Assemble transmission from subassemblies (para 7-21).

TA 156302

7-21. Assembly of Transmission from Subassemblies

This task covers:

Reassembly

INITIAL SETUP:

Applicable Models
All

Equipment Condition Reference
Para 7-15

Condition Description
Transmission disassembled into subassemblies.

Test Equipment
None

Special Tools
Torque wrench (0-175 lb-ft)
Fabricated cluster gear hook (see appendix D)
Transfer shifter shaft oil seal replacer
Transfer output shaft seal driver
Remover/replacer tool

Special Environmental Conditions
Clean, well-ventilated work area.

Materials/Parts
Sealing compound (NSN 8030-00-543-4384) and (NSN 8030-00-252-3391)
GAA grease
GO 80-90 lubricant
Four gaskets
Five snaprings
Repair kits
Two seals
Thirteen lockwashers
Locking tab washer

Personnel Required
One mechanic

General Safety Instructions
None

Manual References
TM 9-2320-218-34P
LO 9-2320-218-12

STEP NO.	LOCATION	ITEM	ACTION	REMARKS

NOTE

Lubricate all parts with GO 80-90 lubricant.

REASSEMBLY

1.		New front output shaft seal (3)	*a.* Coat outside edge with sealing compound.

7-21. Assembly of Transmission from Subassemblies (Cont'd)

STEP NO.	LOCATION	ITEM	ACTION	REMARKS
			b. Position in seal bore (2) with lips facing in.	
			c. Using driver (4), install into bore (2) of transmission (1).	Pack GAA grease between lips of seal (3).

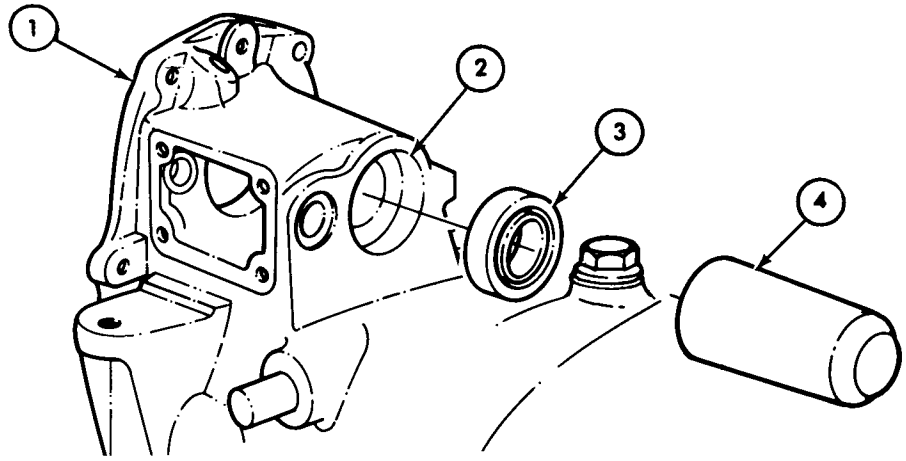

2.		New shifter shaft seal (6)	*a.* Coat outside edge with sealing compound.	
			b. Position in seal bore (5) with lips facing in.	
			c. Using replacer (7), drive into bore (5) of transmission case (1).	Pack GAA grease between lips of seal (6).

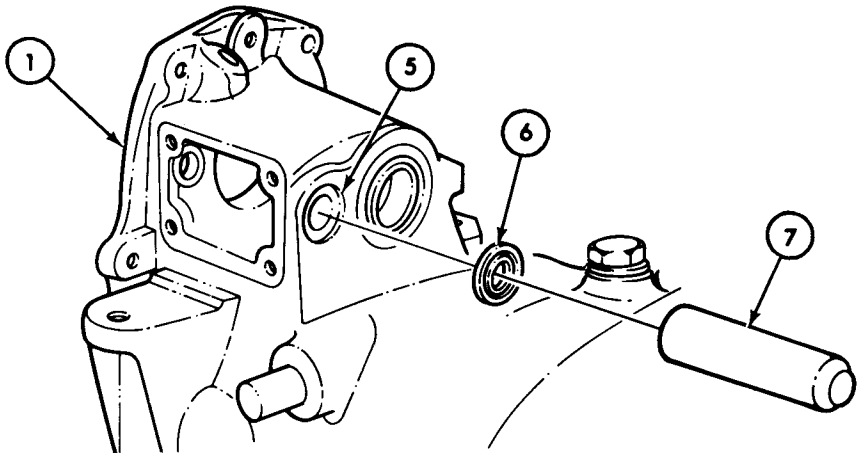

TA156303

7-21. Assembly of Transmission from Subassemblies (Cont'd)

STEP NO.	LOCATION	ITEM	ACTION	REMARKS
3.		New front snapring (4)	Install in groove (2) of transmission case (1).	Use snapring pliers.
4.		Bearing and output shaft assembly (6)	*a.* Place in bore (3) of transmission case (1) *b.* Tap lightly in place.	Splined end of shaft (5) faces forward.

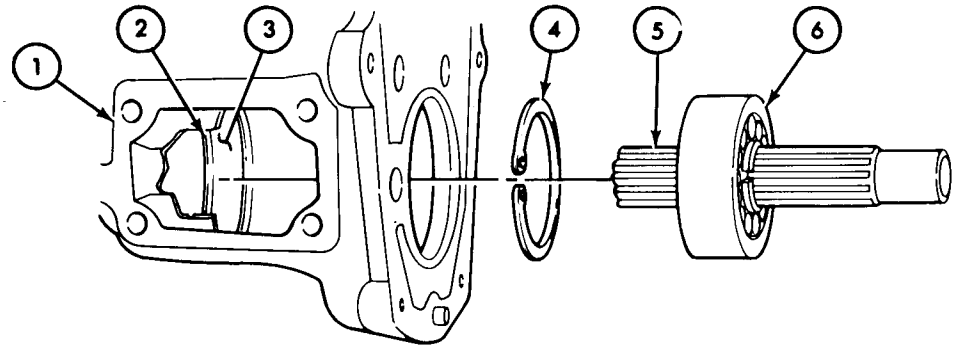

5.		New rear snapring (8)	Install in groove (7) of transmission case (1).	Use snapring pliers. Make sure snapring (8) is seated in groove (7).

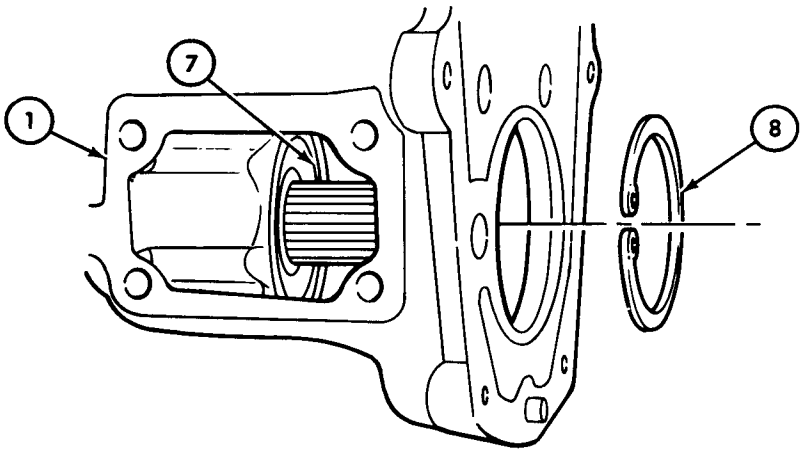

TA 156304

7-21. Assembly of Transmission from Subassemblies (Cont'd)

STEP NO.	LOCATION	ITEM	ACTION	REMARKS
6.		Shifter fork (9) and clutch (10)	*a.* Slide clutch (10) onto output shaft (5). *b.* Place fork (9) on clutch (10).	

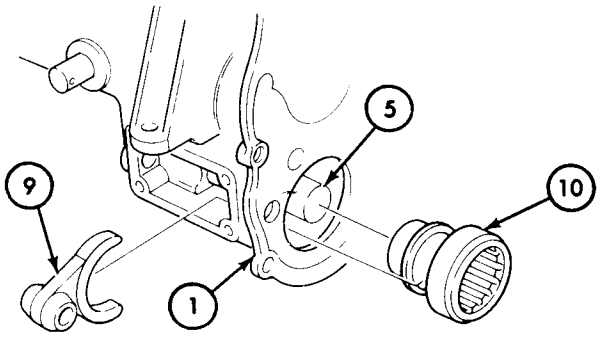

7.		Shifter shaft (11)	Slide through bore (12) in transmission case (1) and insert through washer (14), spring (13), and shifter fork (9).	Insert through front of transmission case (1) with detent grooves (15) towards rear.

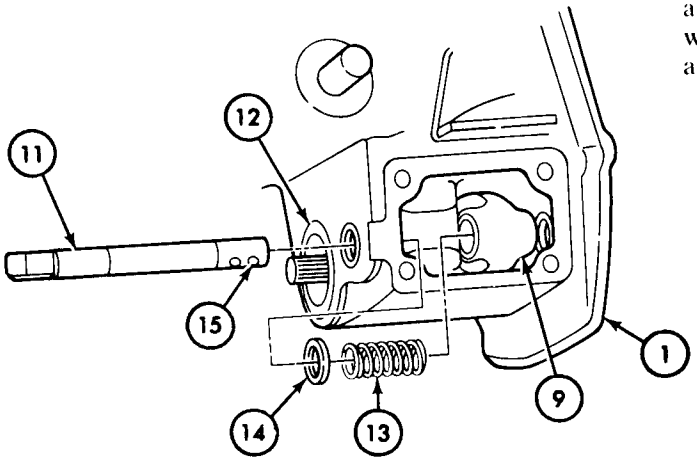

8.		New front shifter shaft snapring (16)	*a.* Pry washer (14) and spring (13) rearward. *b.* Install on front groove of shifter shaft (11).	

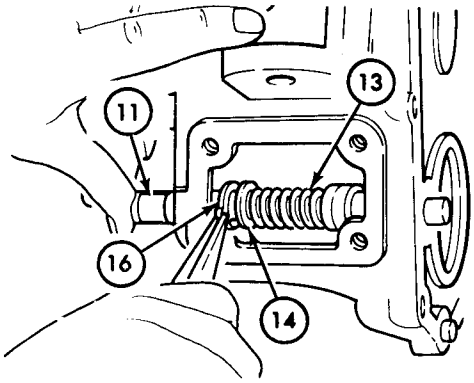

TA 156305

7-21. Assembly of Transmission from Subassemblies (Cont'd)

STEP NO.	LOCATION	ITEM	ACTION	REMARKS
9.		New rear snapring (3)	*a.* Pry shifter fork (2) forward. *b.* Install in rear groove of shifter shaft (1).	

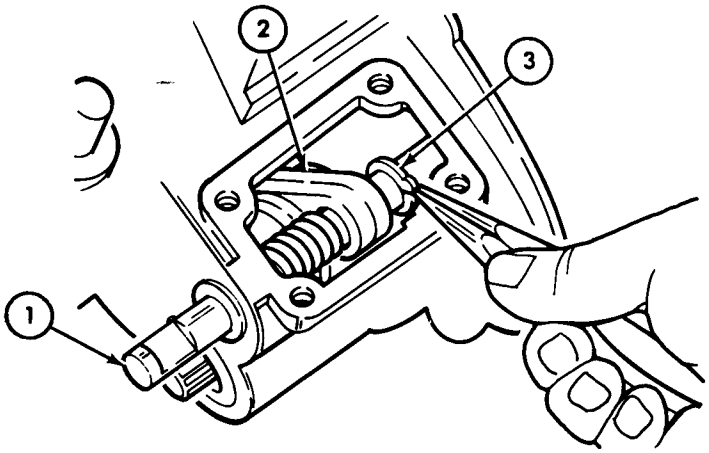

10.		Clutch shifter fork detent ball (5), spring (6), new plug gasket (7), and plug (8)	Place in bore (4) of transmission case (9).	Tighten plug (8) 15-20 lb-ft (20-27 N•m).

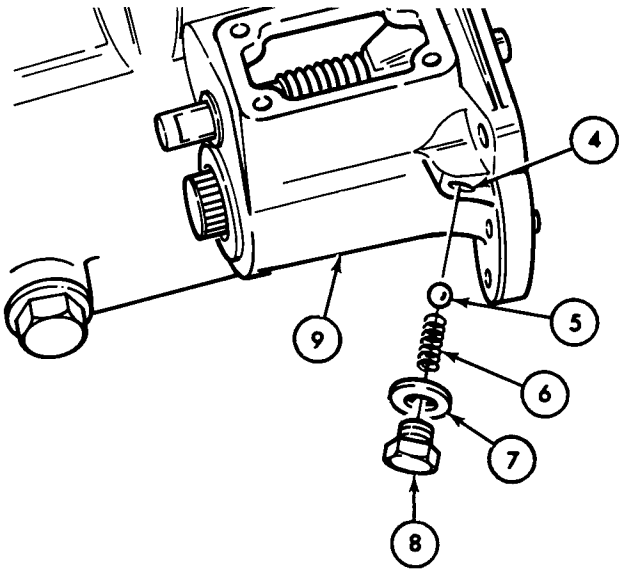

TA 156306

7-21. Assembly of Transmission from Subassemblies (Cont'd)

STEP NO.	LOCATION	ITEM	ACTION	REMARKS
11.		New gasket (13) and clutch cover (12)	Secure to transmission case (4) with four capscrews (10) and new lockwashers (11).	Tighten capscrews (10) 10-14 lb-ft (13-19 N•m).

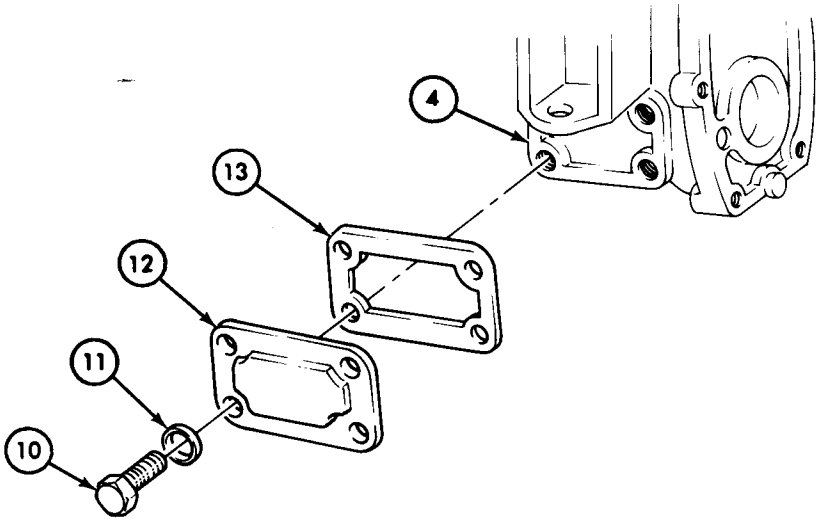

12.		Front output shaft companion flange (14)	Install on output shaft (15).	

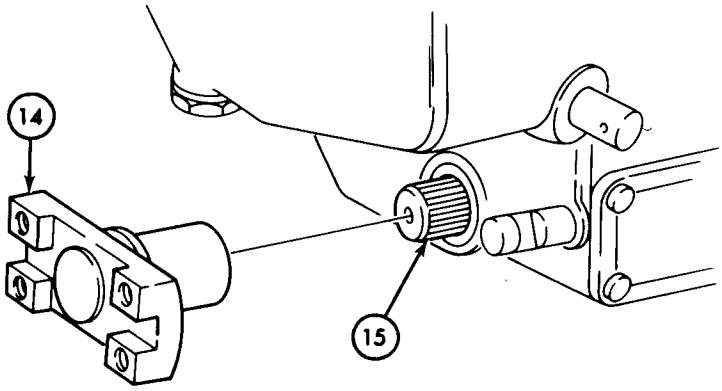

TA 156307

7-21. Assembly of Transmission from Subassemblies (Cont'd)

STEP NO.	LOCATION	ITEM	ACTION	REMARKS
13.		Idler gear (1)	Install into transmission case (2) with large gear facing rear of case (2).	
		NOTE		
		Scribe a mark (6) on end of idler gear shaft (4) to identify locking pin bore (5) in shaft (4). This will assist in installation of lock pin.		
14.		Idler gear shaft (4)	*a.* Install in transmission case (2) and idler gear (1).	
			b. Rotate until mark (6) on end alines with lock pin bore (3) inside of case (2).	

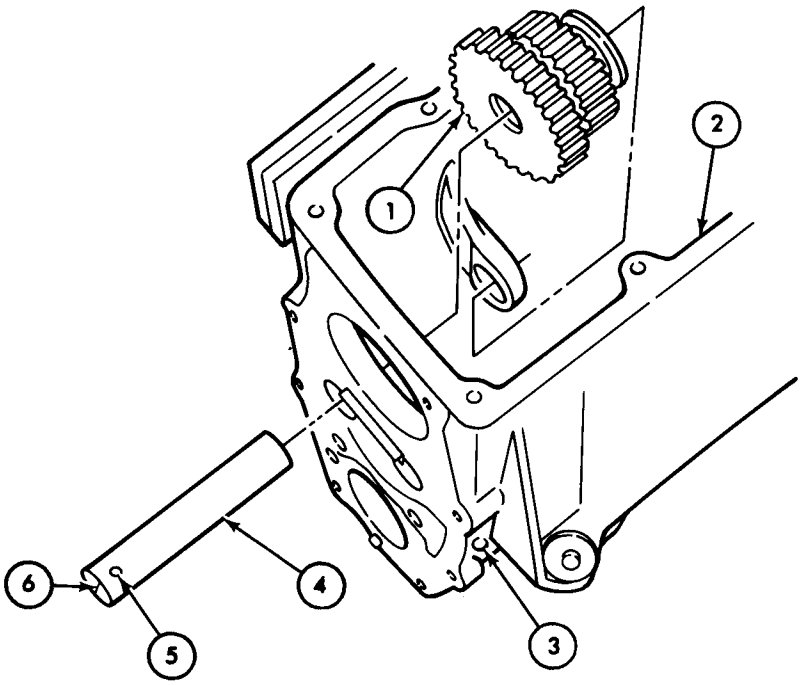

TA 156308

7-21. Assembly of Transmission from Subassemblies (Cont'd)

STEP NO.	LOCATION	ITEM	ACTION	REMARKS
		NOTE		
		Make sure front and rear thrust washers (7) and (11) do not fall off of cluster gear during installation.		
15.		Cluster gear assembly (9)	*a.* Place in transmission case (2) with larger thrust washer (7) toward front of case (2).	Use improvised cluster gear hook (10). Keep gear (9) straight in case (2).
			b. Aline tang (8) of larger thrust washer (7) with slot (14) in front of case (2).	
			c. Aline tang (12) of rear thrust washer (11) with slot (13) inside rear of case (2).	Allow cluster gear assembly (9) to rest in bottom of case (2).

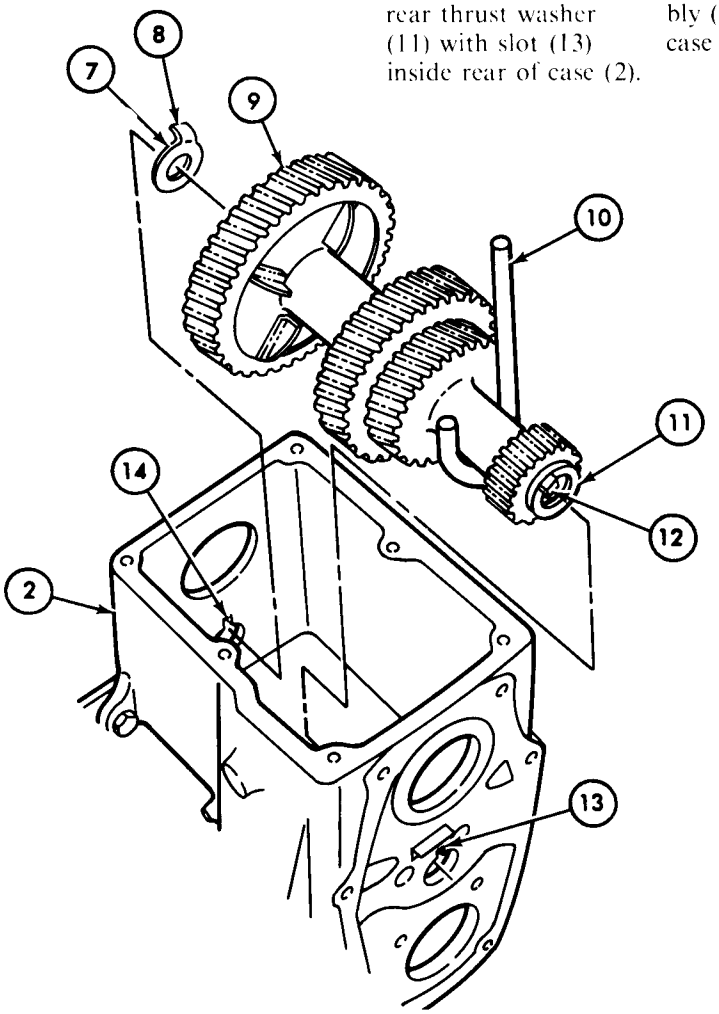

TA 156309

7-21. Assembly of Transmission from Subassemblies (Cont'd)

STEP NO.	LOCATION	ITEM	ACTION	REMARKS
16.		Output shaft assembly (2)	*a.* Insert through rear bearing bore (3) of transmission case (1) from inside of case.	
			b. Lower into case (1).	

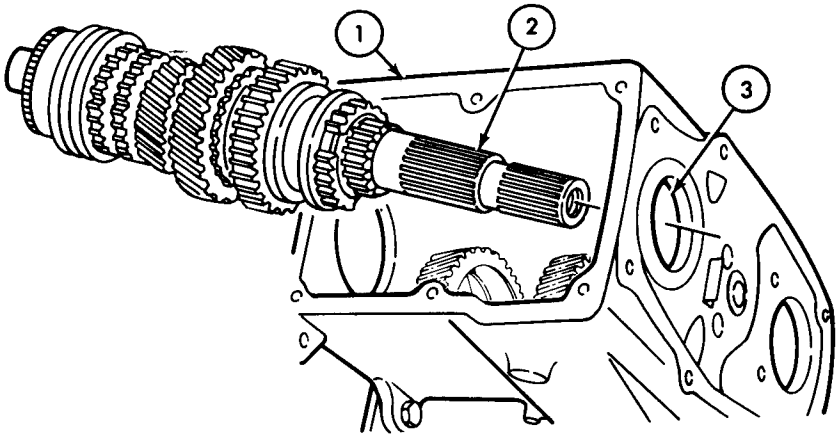

CAUTION

Do not allow roller bearings (5) to fall into transmission. Loose roller bearings will cause damage to transmission.

17.		Input shaft (4)	*a.* Insert through bore (6) in front of case (1) from outside toward inside.	
			b. Aline to output shaft assembly (2).	Make sure blocking ring (7) is positioned between input shaft (4) and synchronizer (8).
			c. Tap bearing (9) until seated in bore (6).	

TA 156310

7-21. Assembly of Transmission from Subassemblies (Cont'd)

STEP NO.	LOCATION	ITEM	ACTION	REMARKS

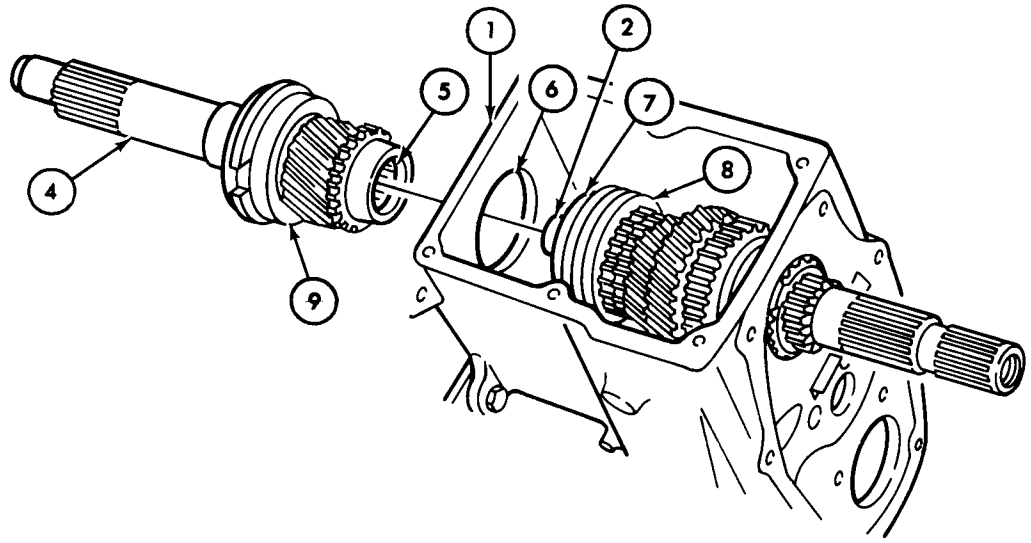

18.		Input shaft retainer (12) and new gasket (10)	*a.* Lightly coat gasket (10) with sealer.	
			b. Install on input shaft (15) with oil drain cavity (11) below input shaft (15).	
			c. Secure to transmission case (1) with three capscrews (14) and new lockwashers (13).	Apply sealer to all but first two threads of capscrews (14). Tighten capscrews (14) 10-14 lb-ft (14-19 N•m).

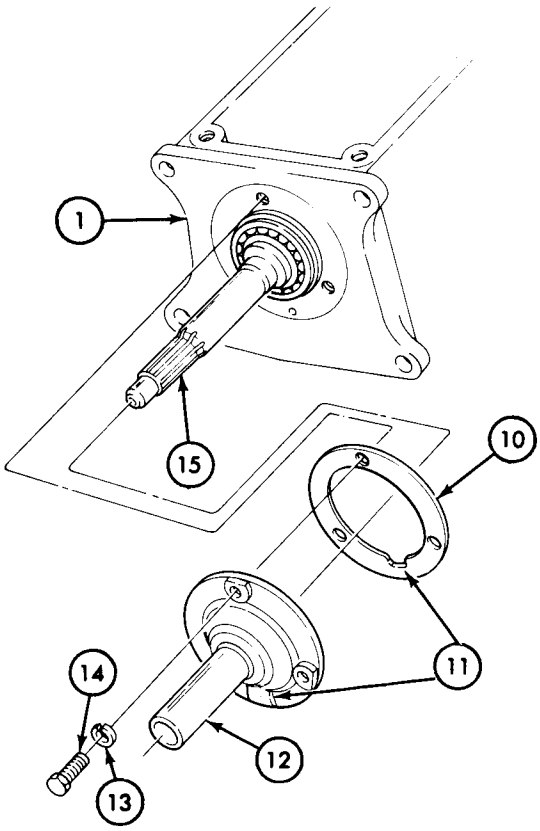

TA 156311

7-21. Assembly of Transmission from Subassemblies (Cont'd)

STEP NO.	LOCATION	ITEM	ACTION	REMARKS
19.		Rear transmission bearing (3)	*a.* Place on output shaft (2).	
			b. Start into bearing bore (5) in rear of case (1).	
20.		New snapring (4)	Install on bearing (3).	Use snapring pliers.

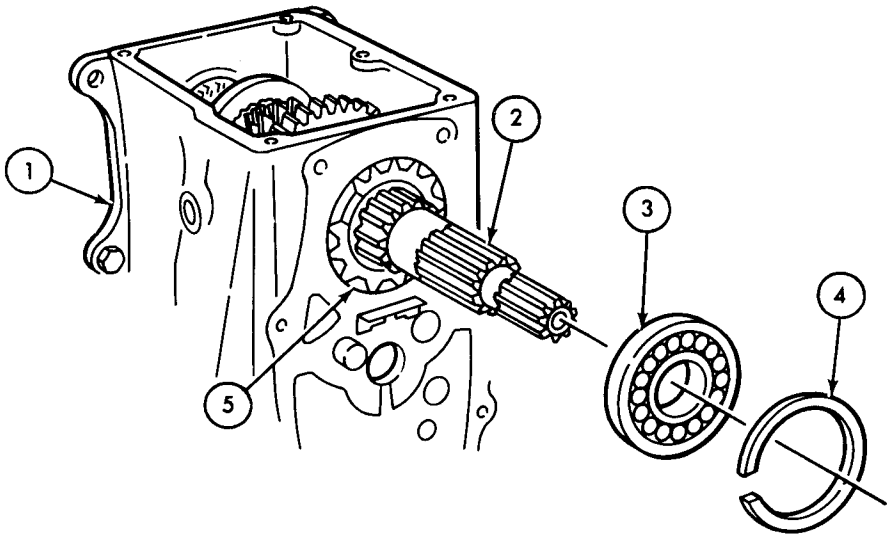

21.		Transfer input gear (7), spacer (8), speedometer gear (9), and bearing race (10)	*a.* Position on output shaft (2).	Input gear (7) shoulder must face inward. Teeth of speedometer gear (9) must face outward.
			b. Press into position on shaft (2) until bearing (3) is seated.	Use parking brakedrum (11), washer (12), and capscrew (13). Use drift (6) to hold output shaft internal gears (14) in place.

TA 156312

7-21. Assembly of Transmission from Subassemblies (Cont'd)

STEP NO.	LOCATION	ITEM	ACTION	REMARKS
			c. Remove capscrew (13), washer (12), and brakedrum (11) from shaft (2).	

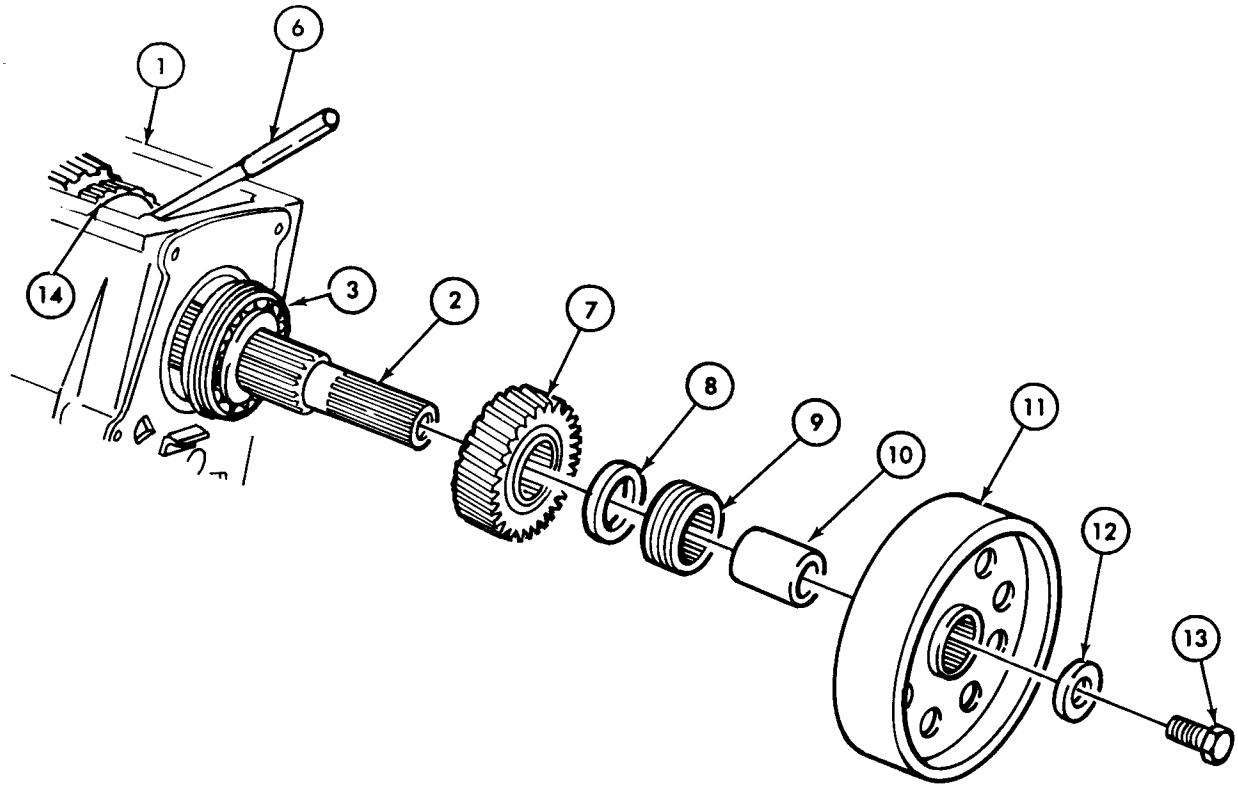

TA 156313

7-21. Assembly of Transmission from Subassemblies (Cont'd)

STEP NO.	LOCATION	ITEM	ACTION	REMARKS
		NOTE		
		Scribe a mark (6) on end of cluster gear countershaft (3) to identify locking pin bore (8) in shaft (3). This will assist in installation of lockpin (9).		
22.		Cluster gear (2)	Raise up into position and aline with bore in transmission case (4).	Use improvised cluster gear hook (1).
23.		Cluster gear countershaft (3)	*a.* Insert through bore in rear of transmission case (4).	
			b. Push through cluster gear (2) forcing remover replacer tool (5) from transmission case (4).	Make sure needle bearings do not dislodge. Do not push in all the way.
			c. Rotate until mark (6) on end alines with lockpin bore (7) in side of case (4).	
			d. Tap in until flush with case (4).	

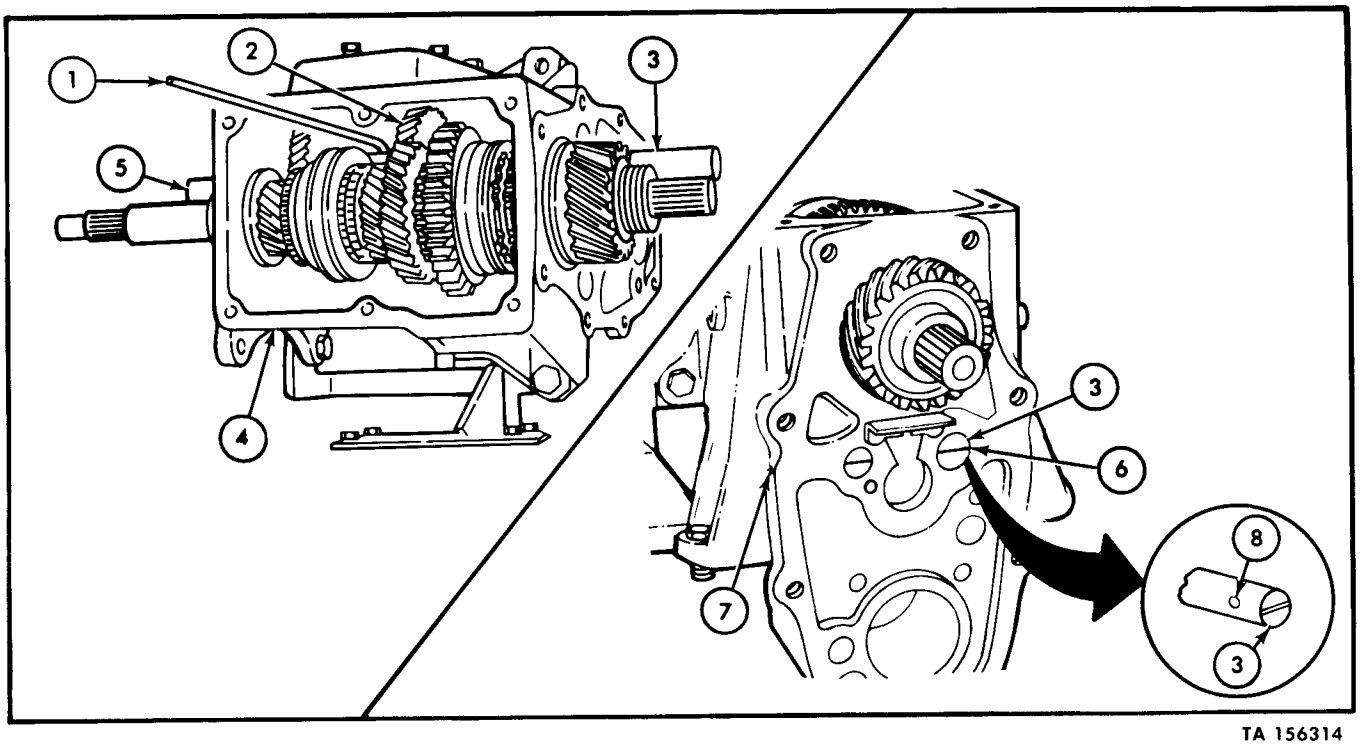

TA 156314

7-21. Assembly of Transmission from Subassemblies (Cont'd)

STEP NO.	LOCATION	ITEM	ACTION	REMARKS
		NOTE Lockpin (9) must retain both the countershaft (3) and idler gear shaft (11) in the transmission case (4).		
24.		Lockpin (9)	Install in bore (7) of transmission case (4).	
25.		Two lockpin retaining screws (10)	*a.* Coat threads with sealer.	
			b. Install one in each side of transmission case (4) and tighten securely.	

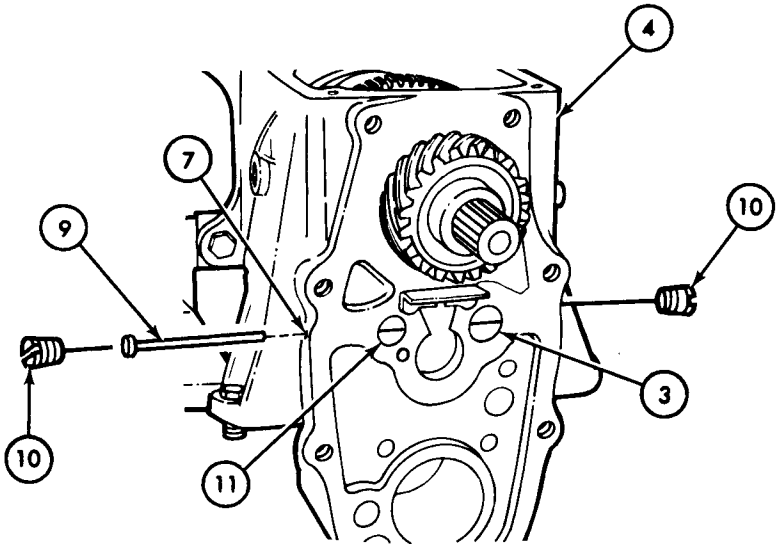

TA 156315

7-21. Assembly of Transmission from Subassemblies (Cont'd)

STEP NO.	LOCATION	ITEM	ACTION	REMARKS
26.		Reverse shifter arm (2)	Place in groove (4) of reverse idler gear in transmission case (1).	
		NOTE		
		If optional pivot (5) is being installed, proceed to step 28.		
27.		Pivot (3)	*a.* Apply light coating of sealer on all but first two threads of pivot (3).	
			b. Install in side of transmission case (1) and secure.	Make sure pivot (3) inserts in reverse shifter arm (2). Tighten pivot (3) 40-50 lb-ft (54-68 N•m).
		NOTE		
		If optional pivot is not being installed, proceed to step 29.		
28.		Pivot (5) and new locking tab washer (6)	*a.* Apply light coating of sealer on all but first two threads of pivot (5).	
			b. Install in side of transmission case (1), and secure.	Make sure pivot (5) inserts in reverse shifter arm (2). Tighten pivot (5) 40-50 lb-ft (54-68 N•m).
			c. Bend washer tabs (7) outward against pivot (5).	

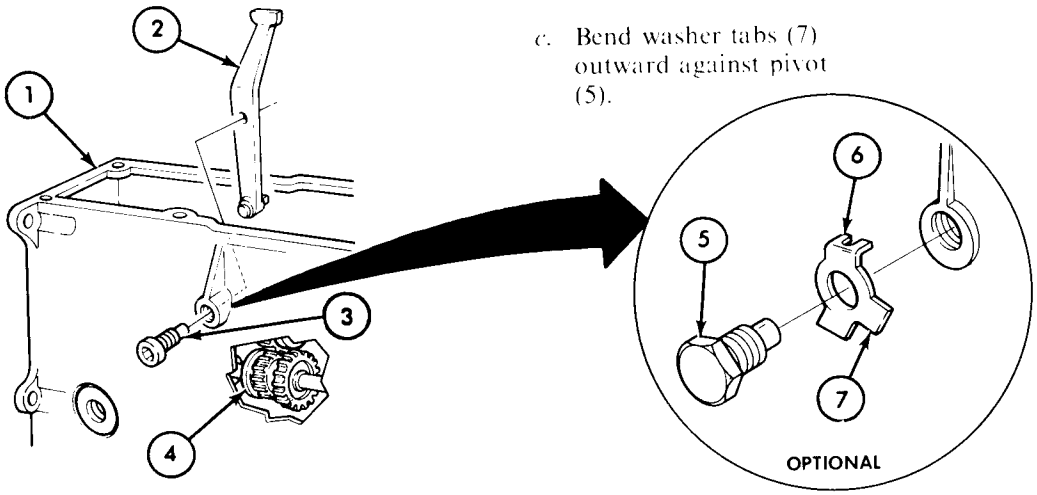

TA 156316

7-21. Assembly of Transmission from Subassemblies (Cont'd)

STEP NO.	LOCATION	ITEM	ACTION	REMARKS
29.		Gearshift housing (10)	Aline all three shifter shaft gates (12).	Transmission in neutral position.
		NOTE		
		Make sure transmission is in neutral before performing step 30.		
30.		Gearshift housing (10) and new gasket (11)	*a.* Position to transmission (1).	Lightly coat each side of gasket (11) with GAA grease.
			b. Secure with six capscrews (9) and new lockwashers (8).	Tighten capscrews (9) 10-14 lb-ft (14-19 N•m).

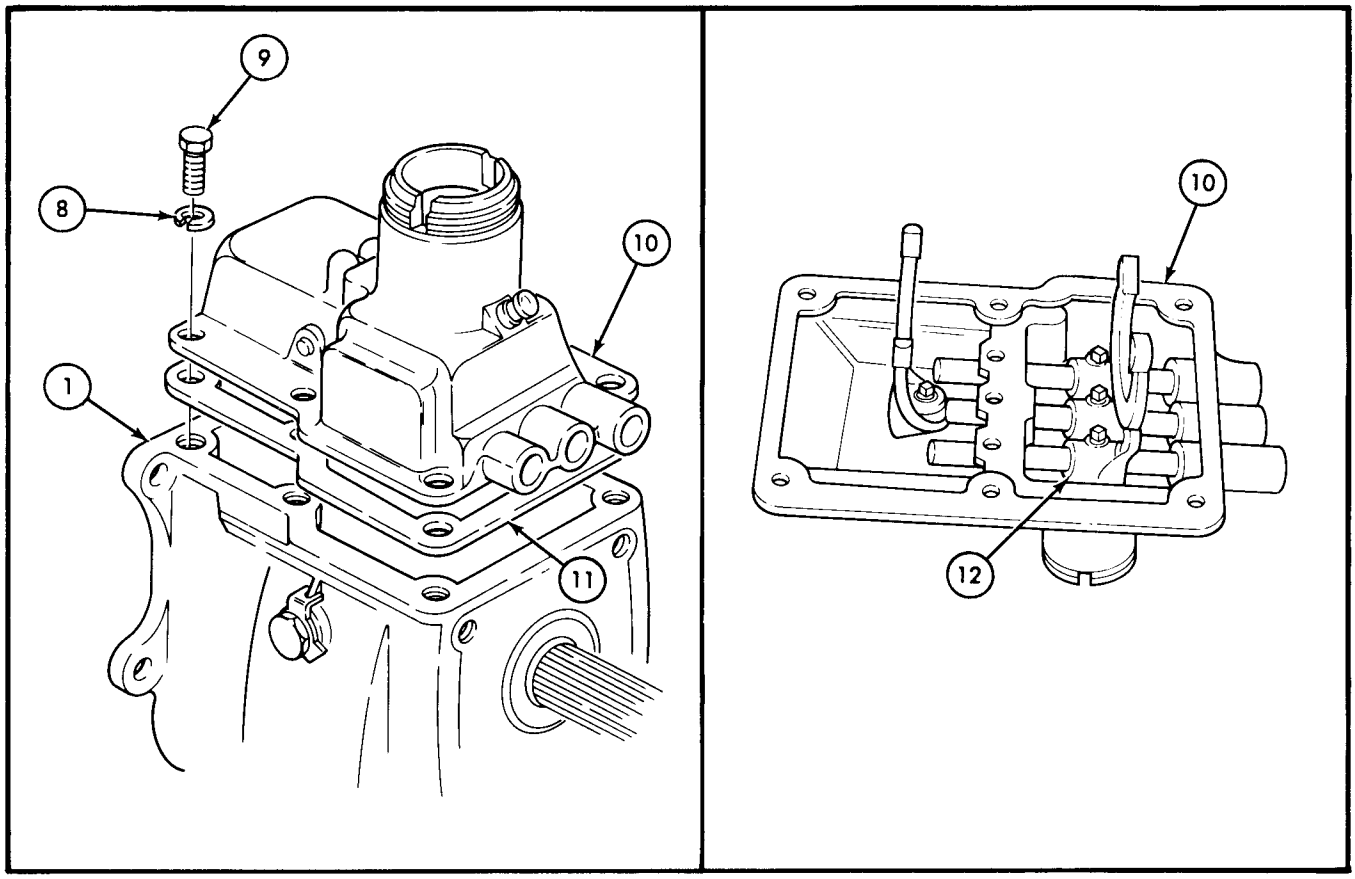

END OF TASK!

FOLLOW-ON TASK: Reattach transfer assembly (para. 7-22).

TA 156317

7-22. Transmission/Transfer Reattachment

This task covers:

Reattachment

INITIAL SETUP:

Applicable Models
All

Equipment Condition Reference
Para 7-10

Condition Description
Transmission transfer mounted on repair stand.

Test Equipment
None

Special Tools
Torque wrench (0-175 lb-ft)

Special Environmental Conditions
Clean, well-ventilated work area.

Materials/Parts
Three gaskets
Tab washer
Thrust washer
GAA grease
Two parking brake capscrew-assembled lockwashers
Thirteen lockwashers
Sealing compound (NSN 8030-00-252-3391)

Personnel Required
One mechanic

General Safety Instructions
None

Manual References
TM 9-2320-218-34P
LO 9-2320-218-12

STEP NO.	LOCATION	ITEM	ACTION	REMARKS
		NOTE		
		Do not perform step 2 if total disassembly has been performed.		
2.		Transfer input gear (3), spacer (4), speedometer drive gear (5), and bearing race (6)	*a.* Aline pins (8) to guide holes (9) in transmission case (1). *b.* Seat in transmission case (1).	
REATTACHMENT				
1.		New intermediate gear thrust washer (7)	Aline pins (8) to guide holes (9) in transmission case (1) and seat in transmission (1).	Lubricate with GAA grease.

7-22. Transmission/Transfer Reattachment (Cont'd)

STEP NO.	LOCATION	ITEM	ACTION	REMARKS

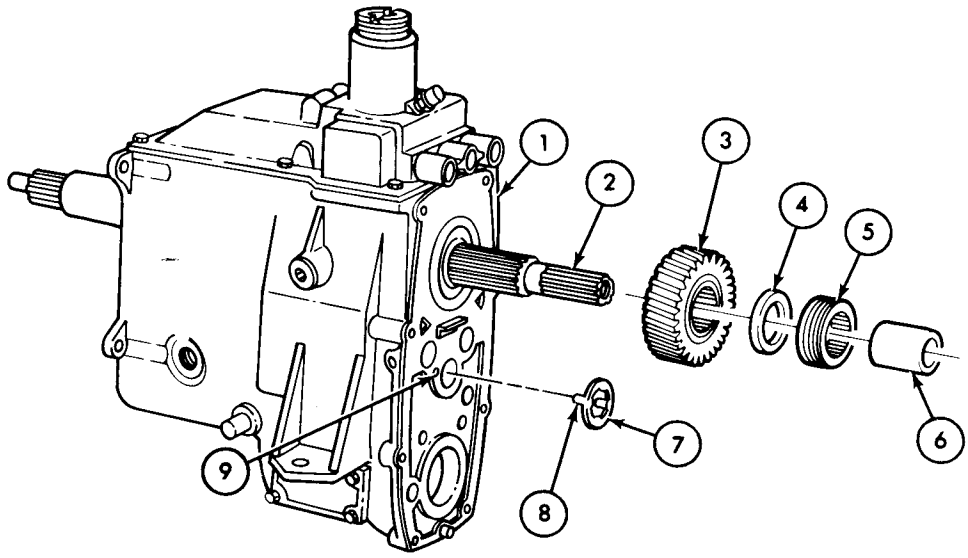

NOTE

- Make sure gasket surfaces of transmission and transfer are clean and smooth.
- Do not allow rollers to drop out of intermediate gear during step 3.

3.		Transfer case (11) and new gasket (10)	*a.* Lightly coat each side of gasket (10) with GAA grease.	Notice position of notch (14) in gasket (10).
			b. Secure to transmission (1) with eight capscrews (13) and new lockwashers (12).	Tighten capscrews (13) 20-25 lb-ft (27-34 N•m).

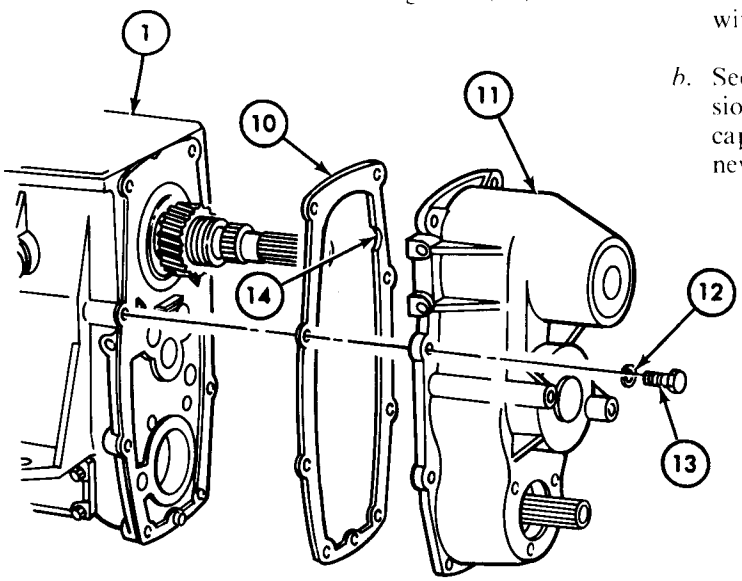

TA 156318

7-22. Transmission/Transfer Reattachment (Cont'd)

STEP NO.	LOCATION	ITEM	ACTION	REMARKS
4.		Output shaft retainer (10) and new gasket (11)	*a.* Lightly coat each side of gasket (11) with GAA grease.	
			b. Secure to transfer case (1) with three capscrews (8) and new lockwashers (9).	Tighten capscrews (8) 10-14 lb-ft (13-19 N•m).
5.		Companion flanges (7) and (13)	Slide one on each end of rear output shaft (12).	Companion flange (13) will already be installed if total disassembly has been performed.
6.		Parking brakedrum (3)	*a.* Slide on transmission output shaft (2) until flush against transfer case (1).	
			b. Secure to shaft (2) with capscrew (6), new tab washer (5), and flat washer (4).	Tighten capscrew (6) 60-65 lb-ft (81-88 N•m).
			c. Bend tab washer (5) over head of capscrew (6).	

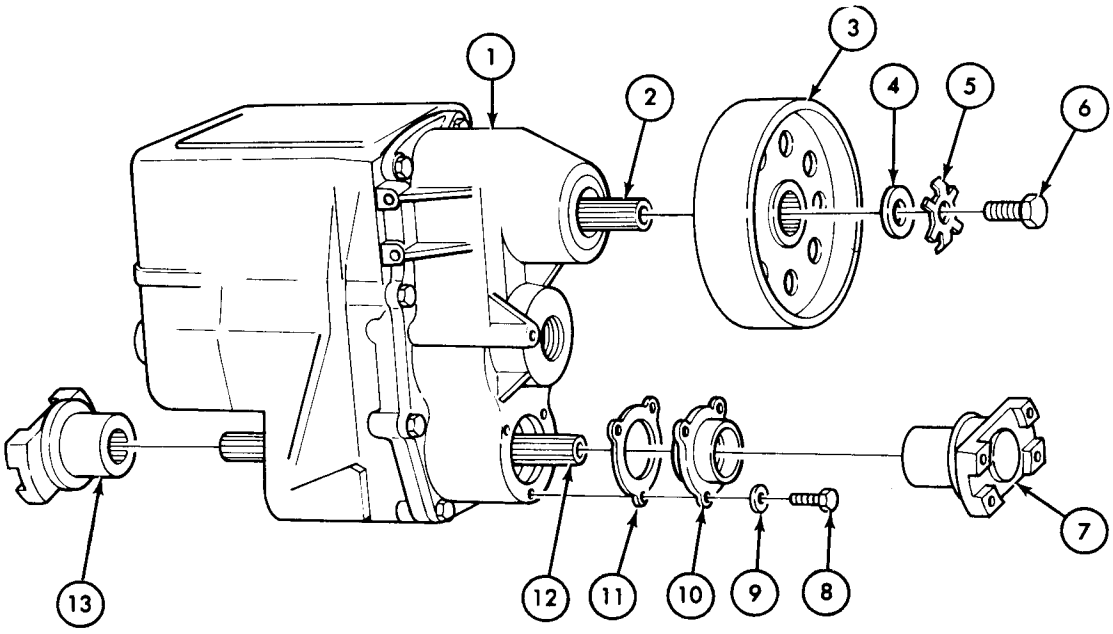

TA 156319

7-22. Transmission/Transfer Reattachment (Cont'd)

STEP NO.	LOCATION	ITEM	ACTION	REMARKS
7.		Parking brake band assembly (14)	Place over parking brakedrum (3) and secure with two new lockwashers (15) and capscrews (16).	Tighten capscrews (16) 40-44 lb-ft (54-60 N•m).
8.		Band support (18)	Secure to transfer case (1) with two new capscrew-assembled lockwashers (17).	Tighten capscrew-assembled lockwashers (17) 8-10 lb-ft (10.8-13.6 N•m).
9.		Parking brake band adjusting spring (19)	Hook to band support (18) and band assembly (14).	

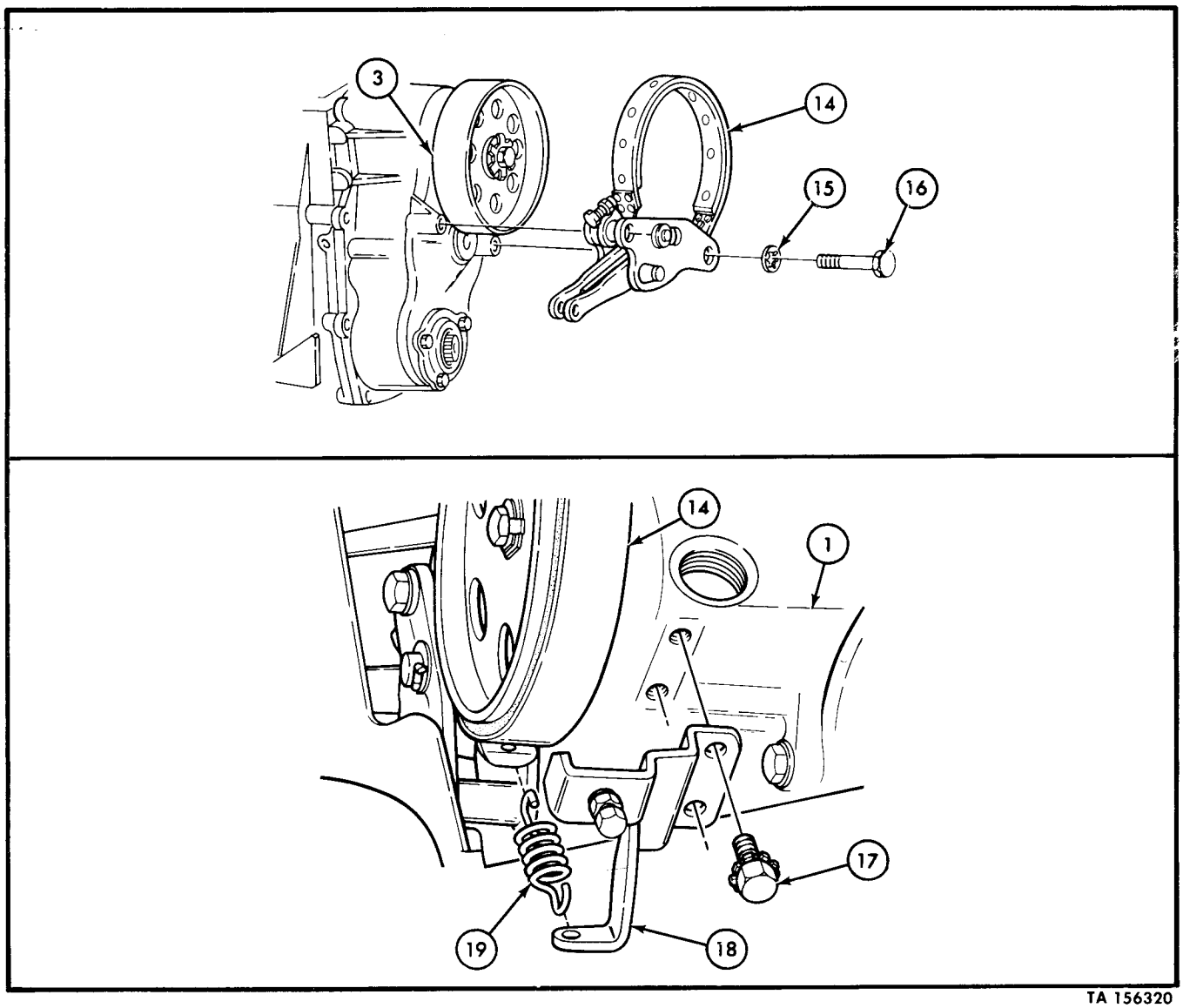

TA 156320

7-22. Transmission/Transfer Reattachment (Cont'd)

STEP NO.	LOCATION	ITEM	ACTION	REMARKS
10.		Speedometer driven gear (2) and bearing and seal assembly (3)	*a.* Apply sealing compound to threads of bearing (3).	
			b. Install into top of transfer case (1).	Tighten bearing (3) 12-15 lb-ft (16-20 N•m).

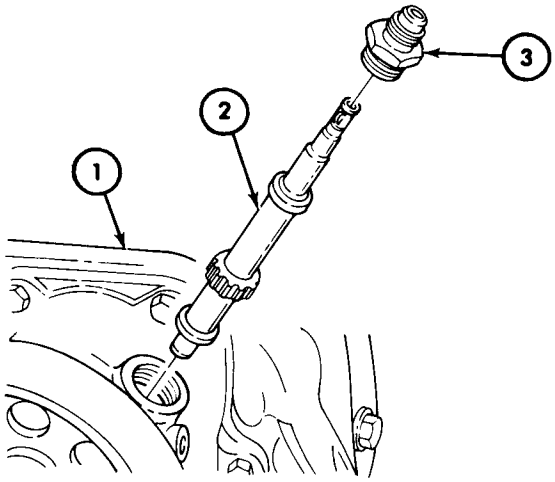

11.	Transmission transfer assembly (4)	Lubricant fill plug (6) and gasket (5)	*a.* Remove.	Discard gasket (5).
			b. Fill with 5.5 pints (2.6 liters) of transmission lubricant.	See LO 9-2320-218-12.
12.		Lubricant fill plug (6) and new gasket (5)	Install in transmission transfer assembly (4).	Tighten fill plug (6) 10-14 lb-ft (13-19 N•m).

TA 156321

7-22. Transmission/Transfer Reattachment (Cont'd)

STEP NO.	LOCATION	ITEM	ACTION	REMARKS

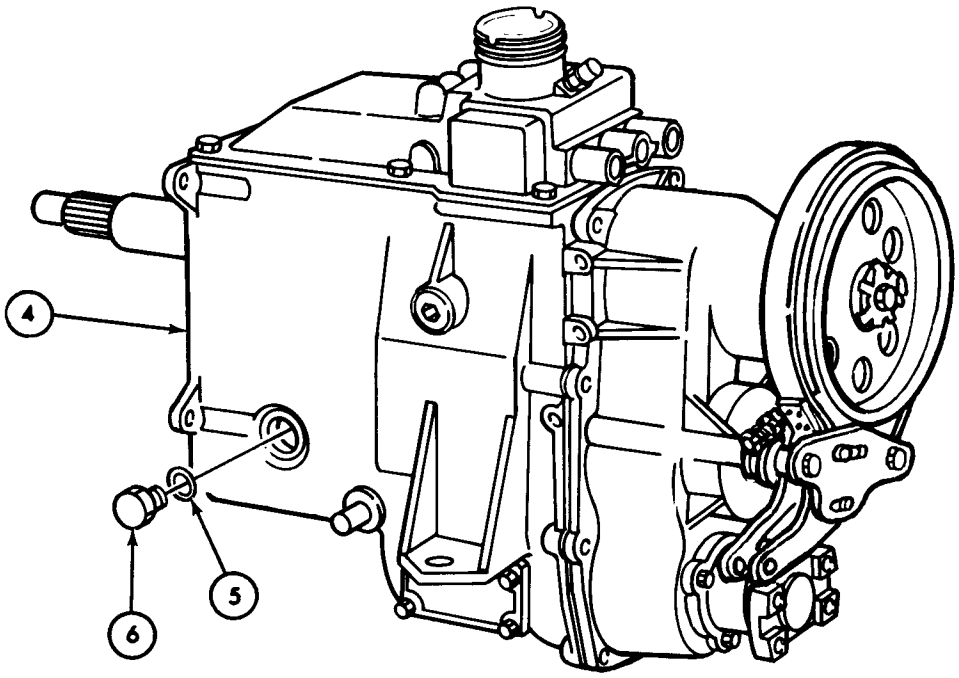

END OF TASK!

FOLLOW-ON TASK: Remove transmission/transfer assembly from repair stand (para 7-10).

TA 156322

Section V. TRANSMISSION/TRANSFER REPAIR AND REPLACEMENT STANDARDS

7-23. General

This section provides repair and replacement standards pertaining to direct and general support for the transmission transfer components. The repair and replacement standards included herein give minimum, maximum and key clearance of new or repaired parts. An asterisk (*) in the "wear limit" column indicates that a part should be replaced when worn beyond dimensions given in "size and fit of new parts" column. In "size and fit of new parts" column, the letter "L" indicates a loose fit (clearance); the letter "T" indicates a tight fit (interference).

7-24. Repair and Replacement Standards — Transfer/Transmission

a. The components of the transfer assembly covered by the repair and replacement standard listed in table 7-2 are illustrated below. To find the component and its tolerance requirements, match the reference number identifying the component to the same reference number listed to the extreme left in table 7-2.

Table 7-2. Repair and Replacement Standards — Transfer Assembly

Ref. No.	Point of Measurement	Size and Fit of New Parts	Wear Limits
	TRANSFER		
1.	Outside diameter at bearing surface	1.5060-1.5072 in. (38.25-38.27 mm)	1.5060 in. (38.2524 mm)
2.	Thickness of washer	0.146-0.142 in. (3.7-3.6 mm)	0.140 in. (3.55 mm)
3.	Thickness of spacer	0.090-0.092 in. (2.28-2.33 mm)	0.085 in. (2.15 mm)
4.	Length of each roller bearing	1.10-1.12 in. (27.9-28.4 mm)	1.09 in. (27.6 mm)

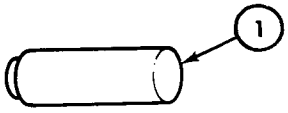

INTERMEDIATE SHAFT

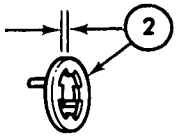

INTERMEDIATE GEAR THRUST WASHER

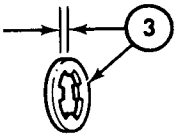

NEEDLE BEARING SPACER

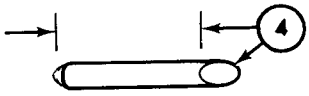

INTERMEDIATE GEAR NEEDLE BEARING

TA 156323

Table 7-2. Repair and Replacement Standards — Transfer Assembly (Cont'd)

Ref. No.	Point of Measurement	Size and Fit of New Parts	Wear Limits
5.	Diameter of each roller	0.2498-0.2500 in. (6.344-6.349 mm)	*
6.	Inside diameter of gear bore	2.0098-2.0106 in. (42.05-53.5 mm)	2.0111 in. (51.08 mm)
7.	Length of gear	2.470-2.474 in. (62.7-62.8 mm)	2.465 in. (62.6 mm)

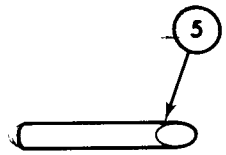

INTERMEDIATE GEAR NEEDLE BEARING

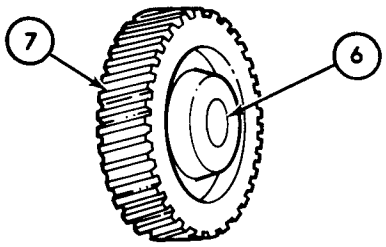

INTERMEDIATE GEAR

8.	Shaft bore	0.311-0.313 in. (7.9-8.0 mm)	0.309 in. (7.8 mm)
9.	Shaft diameter at upper bearing	0.307-0.309 in. (7.7-7.8 mm)	0.305 in. (7.74 mm)
10.	Shaft diameter at lower bearing	0.246-0.248 in. (6.5-6.6 mm)	0.244 in. (6.19 mm)
11.	Inside diameter of bearing bore	1.4995-1.5005 in. (38-38.2 mm)	*
12.	Inside diameter of shaft bore	1.4465-1.4475 in. (36.74-36.76 mm)	*
13.	Inside diameter of bearing bore	2.8344-2.8354 in. (71.9-72.0 mm)	*

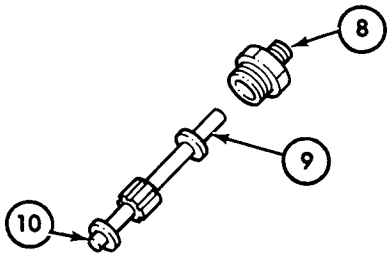

SPEEDOMETER DRIVEN GEAR AND BEARING

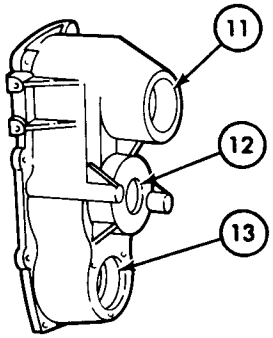

CASE

TA 156324

Table 7-2. Repair and Replacement Standards — Transfer Assembly (Cont'd)

Ref. No.	Point of Measurement	Size and Fit of New Parts	Wear Limits
14.	Bearing sleeve diameter	0.6275-0.6290 in. (15.93-15.97 mm)	0.6310 in. (16.02 mm)
	TRANSFER CLUTCH		
15.	Outside diameter of shaft	0.5605-0.5610 in. (14.23-14.24 mm)	0.560 in. (14.22 mm)
16.	Detent ball seat radius	0.1820-.1920 in. (4.6-4.9 mm)	0.1940 in. (4.9276 mm)
17.	Shift collar contact width	0.210-0.213 in. (5.34-5.41 mm)	0.205 in. (5.207 mm)

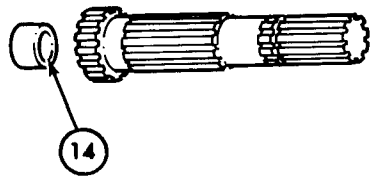

REAR OUTPUT SHAFT AND BUSHING

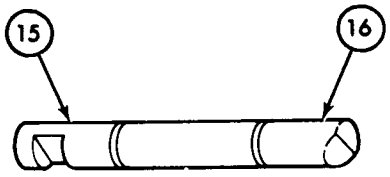

SHIFTER SHAFT

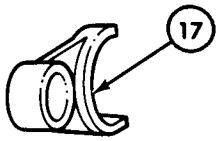

FORK

TA 156325

Table 7-2. Repair and Replacement Standards — Transfer Assembly (Cont'd)

Ref. No.	Point of Measurement	Size and Fit of New Parts	Wear Limits
18.	Machined bearing seat diameter	0.6245-0.6250 in. (15.86-15.87 mm)	0.623 in. (15.824 mm)
19.	Shifter contact groove	0.218-0.224 in. (15.5-15.7 mm)	0.229 in. (15.81 mm)

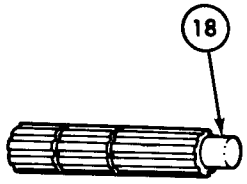

FRONT OUTPUT SHAFT

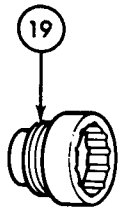

CLUTCH

TA 156326

b. The components of the transmission covered by the repair and replacement standards listed in table 7-3 are illustrated below. To find the component and its tolerance requirements, match the reference number identifying the component to the same reference number listed to the extreme left in table 7-3.

Table 7-3. Repair and Replacement Standards — Transmission

Ref. No.	Point of Measurement	Size and Fit of New Parts	Wear Limits
	INPUT SHAFT		
1.	Outside diameter at clutch release	1.181 in. (4.54 mm)	1.176 in. (29.8 mm)
2.	Outside diameter of roller	0.2186-0.2188 in. (5.55-5.56 mm)	*
3.	Length of roller	0.605-0.625 in. (15.4-15.8 mm)	0.600 in. (15.2 mm)
4.	Seal contact area	0.998-1.002 in. (25.34-25.45 mm)	0.996 in. (25.2 mm)
5.	Inside diameter of bearing bore	0.998-1.002 in. (25.34-25.45 mm)	1.2050 in. (30.6 mm)
6.	Outside diameter of bearing	2.8341-2.8346 in. (71.98-71.99 mm)	*

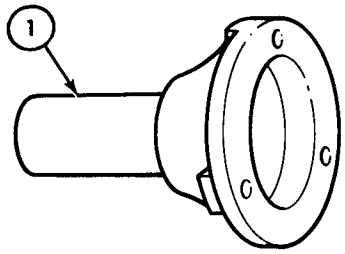

INPUT SHAFT RETAINER

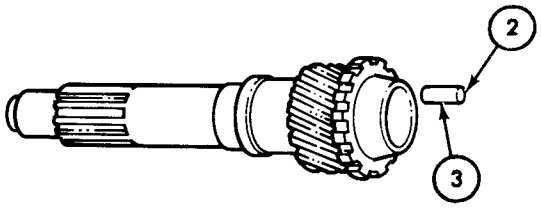

INPUT SHAFT ROLLER

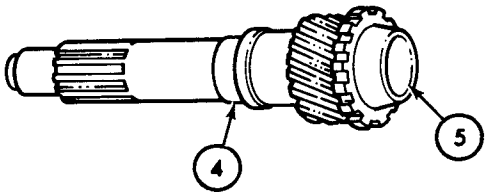

INPUT SHAFT

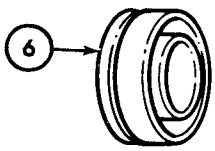

INPUT SHAFT BEARING

TA 156327

Table 7-3. Repair and Replacement Standards — Transmission (Cont'd)

Ref. No.	Point of Measurement	Size and Fit of New Parts	Wear Limits
	COUNTERSHAFT GEAR CLUSTER		
7.	Thrust washer thickness	0.0615-0.0635 in. (1.56-1.61 mm)	0.060 in. (1.5 mm)
8.	Spacer thickness	0.085-0.095 in. (2.15-2.41 mm)	0.080 in. (2.1 mm)
9.	Roller bearing length	0.860-0.880 in. (21.8-22.3 mm)	0.850 in. (21.5 mm)
10.	Roller bearing diameter	0.1875-0.1873 in. (4.76-4.75 mm)	*
11.	Internal diameter at bearing surfaces	1.2695-1.2705 in. (32.24-32.27 mm)	*

FRONT THRUST WASHER

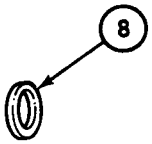

SHORT THRUST SPACER

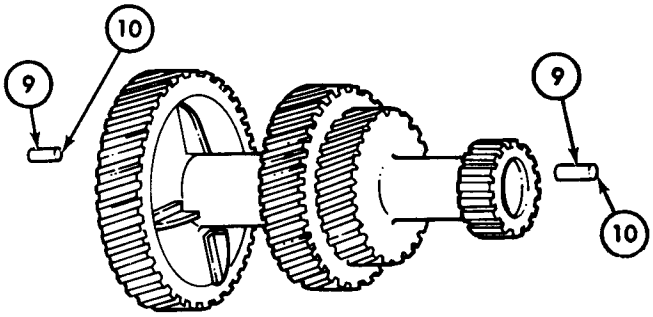

NEEDLE ROLLER BEARINGS

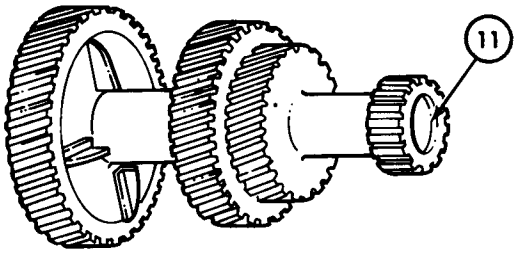

CLUSTER GEAR

TA 156328

Table 7-3. Repair and Replacement Standards — Transmission (Cont'd)

Ref. No.	Point of Measurement	Size and Fit of New Parts	Wear Limits
12.	Spacer length	5.250-5.270 in. (133.3-133.8 mm)	5.230 in. (132.8 mm)
13.	Thrust washer thickness	0.0615-0.0635 in. (1.56-1.61 mm)	0.0600 in. (1.5 mm)

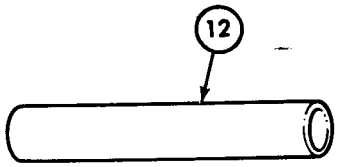

SPACER SLEEVE

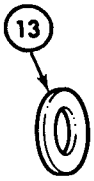

REAR THRUST WASHER

TA 156329

Table 7-3. Repair and Replacement Standards — Transmission (Cont'd)

Ref. No.	Point of Measurement	Size and Fit of New Parts	Wear Limits
14.	Gear internal diameter	0.7505-0.7515 in. (19.06-19.08 mm)	0.7530 in. (19.1 mm)
15.	Shaft diameter at bearing surface	0.8925-0.8929 in. (22.66-22.68 mm)	0.8920 in. (22.6 mm)
16.	Shaft diameter	0.7490-0.7495 in. (19.02-19.04 mm)	0.7470 in. (18.9 mm)
17.	Shaft diameter	0.6260-0.6265 in. (15.90-15.92 mm)	*
18.	Input shaft bearing bore diameter	2.8344-2.8354 in. (71.9-72.02 mm)	*

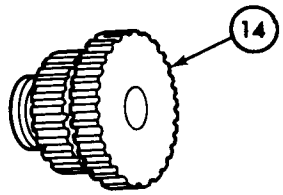

REVERSE IDLER GEAR

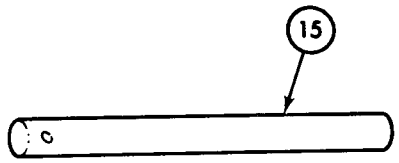

CLUSTER GEAR SHAFT

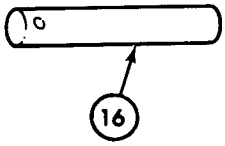

REVERSE IDLER GEAR SHAFT

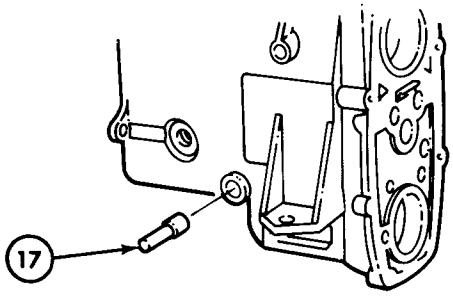

TRANSFER SELECTOR LEVER PIVOT

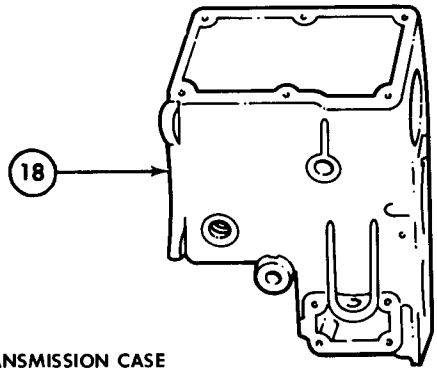

TRANSMISSION CASE

TA 156330

Table 7-3. Repair and Replacement Standards — Transmission (Cont'd)

Ref. No.	Point of Measurement	Size and Fit of New Parts	Wear Limits
	TRANSMISSION OUTPUT SHAFT		
19.	Inside diameter of gear bearing	1.5015-1.5020 in. (38.13-38.2 mm)	1.0540 in. (38.2 mm)
20.	Outside diameter at 3rd-speed gear synchronizer seat	1.4995-1.5000 in. (38.0-38.1 mm)	*
21.	Outside diameter at 2nd-speed gear bearing surface	1.6858-1.6863 in. (42.81-42.83 mm)	1.6853 in. (42.8 mm)
22.	Diameter of each roller bearing	0.1562-0.1560 in. (3.97-3.96 mm)	*
23.	Length of roller bearing	1.000-1.020 in. (25.4-25.9 mm)	0.960 in. (24.3 mm)
24.	Inside diameter of bearing bore	1.9992-1.9998 in. (50.77-50.79 mm)	*

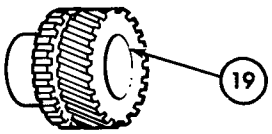

THIRD-SPEED GEAR

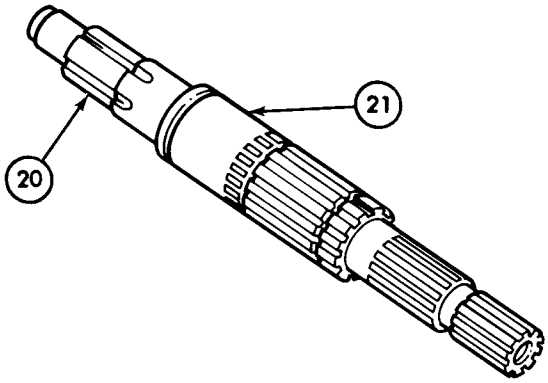

OUTPUT SHAFT

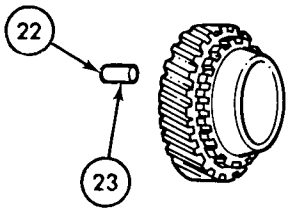

SECOND-SPEED GEAR ROLLER BEARING

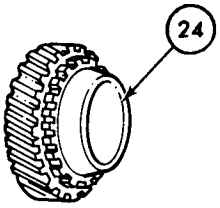

SECOND-SPEED GEAR

TA 156331

Table 7-3. Repair and Replacement Standards — Transmission (Cont'd)

Ref. No.	Point of Measurement	Size and Fit of New Parts	Wear Limits
	TRANSMISSION OUTPUT SHAFT		
25.	Length of gear	1.635-1.645 in. (41.5-41.8 mm)	*
26.	Thickness of spacer	0.390-0.400 in. (9.9-10.2 mm)	0.380 in. (9.6 mm)
	GEARSHIFT HOUSING		
27.	Three shifter shaft bores	0.5615-0.5625 in. (14.26-14.27 mm)	0.5630 in. (14.3 mm)
28.	Detent ball seat radius	0.182-0.192 in. (4.6-4.8 mm)	0.194 in. (4.9 mm)
29.	Run-out at center, total indicator reading		0.004 in. (.10 mm)

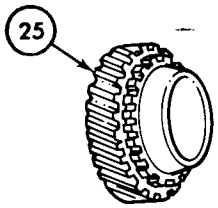

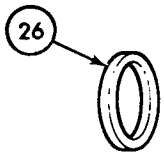

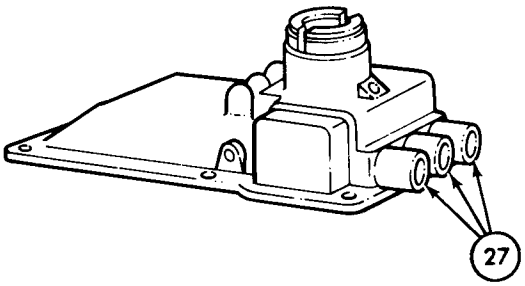

GEARSHIFT HOUSING

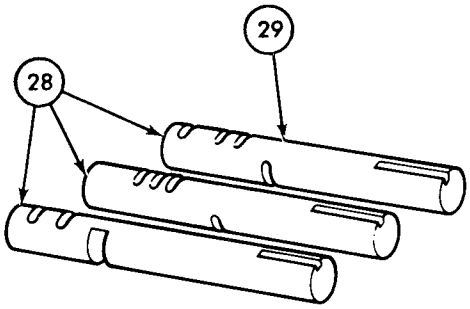

FIRST AND SECOND,
THIRD AND FOURTH
AND
REVERSE SHIFTER SHAFTS

TA 156332

Table 7-3. Repair and Replacement Standards — Transmission (Cont'd)

Ref. No.	Point of Measurement	Size and Fit of New Parts	Wear Limits
	GEARSHIFT HOUSING		
30.	Shift collar contact width	0.352-0.362 in. (8.9-9.1 mm)	0.342 in. (8.6 mm)
31.	Width of shifter gate slot	0.560-0.564 in. (14.2-14.3 mm)	0.574 in. (14.5 mm)
32.	Compressed length of spring	.641 in. (16.27 mm) under load of 40-46 lbs. (18.160-27.240 kg)	*
33.	Shift collar contact width	0.352-0.362 in. (8.9-9.1 mm)	0.342 in. (8.6 mm)

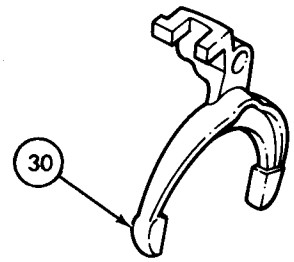

FIRST- AND SECOND-SPEED SHIFTER FORK

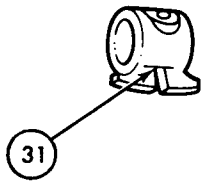

THIRD- AND FOURTH-SPEED SHIFTER GATE

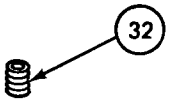

DETENT SPRING

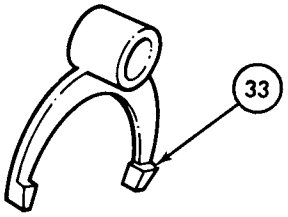

THIRD- AND FOURTH-SPEED SHIFTER FORK

TA 156333

CHAPTER 8

RADIATOR AND RADIATOR SHROUD MAINTENANCE

8-1. General

a. Cleaning, painting, repairing, soldering, and testing of the radiator can be found in TM 750-254.

b. Welding tears in the radiator shroud can be found in TM 9-237.

CHAPTER 9
FRONT SUSPENSION MAINTENANCE

9-1. Overview

a. This chapter provides maintenance and repair information for front suspension components authorized for direct support and general support levels. Each component and related information is covered in one of the following sections:

b. Sections II and III are preceded by a list that provides a breakdown of procedures covered in that section and also provides a paragraph and page number leading you to each task.

Section I. DESCRIPTION AND DATA

9-2. General

This section provides description and data for the front suspension and its component parts.

9-3. Description

The front suspension is comprised of two unequal control arms, a spindle, coil spring, and shock absorber. The spring and shock absorber assembly is positioned between a stamped seat in the lower control arm and a welded seat in the front crossmember. The suspension (control) arms are connected to the crossmember through replaceable rubber bushings. The spindle is mounted to the control arms with ball joints that are of the lube-for-life type.

9-3. Description (Cont'd)

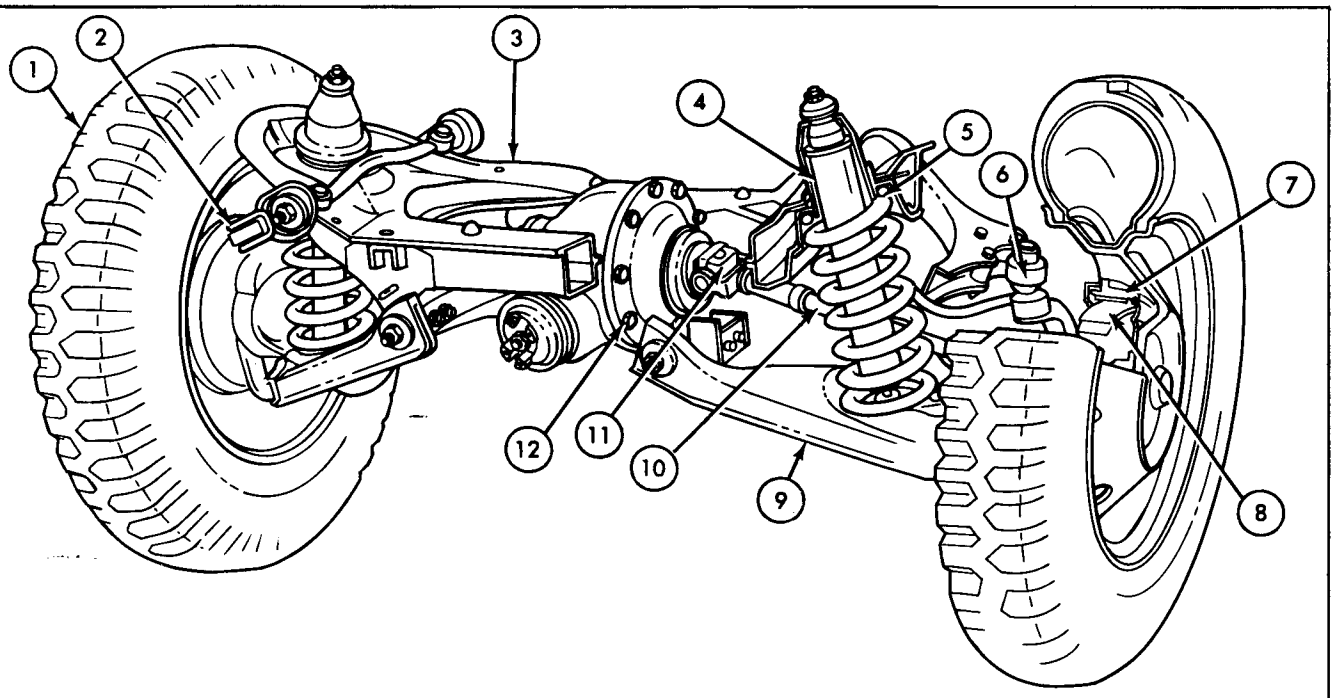

1 Wheel and tire assembly
2 Upper suspension arm
3 Crossmember
4 Shock absorber
5 Coil spring
6 Ball joint—upper
7 Brakedrum
8 Brakeshoe and lining
9 Lower suspension arm
10 Wheel drive shaft
11 Universal joint (yoke to differential)
12 Differential

9-4. Tabulated Data

Tabulated data for front suspension components and alinement is found in table 9-1 below:

Table 9-1. Tabulated Data — Front Suspension

Make	Ordnance design
Type	2-arm independent
Arm type	Stamped A-frame
Shock absorber	Hydraulic telescopic
Shock absorber characteristics	Jounce and rebound hydraulic stop
Action	2-way direct
Shock absorber bore size	1.18 in. (28.143 mm)
Kingpin type	Ball joint
Kingpin inclination	Built-in
Wheel camber at curb weight	Plus 1/2° to plus 1-3/4° maximum variation between wheels, not to exceed 1/2°
Wheel caster at curb weight	Plus 1/2° to minus 1/2°
Wheel toe-in at curb weight	1/32 to 5/32 in. (0.794-3.969 mm)

TA 156100

Section II. REMOVAL, INSTALLATION, GENERAL INSPECTION, CLEANING, AND REPAIR INSTRUCTIONS

9-5. General

When an assembly or component is contaminated by dirt or other abrasive matter, unnecessary and excessive wear will result. Contamination also covers up small cracks or leaks that may hinder safe operation of affected components. The following procedures outline removal, installation, proper cleaning, and inspection practices for front suspension drive assembly and its components.

9-6. Removal, Installation, General Inspection, Cleaning, and Repair Instructions Task Summary

9-7. Front Suspension and Drive Assembly Removal and Installation

This task covers:

a. Removal *b. Installation*

INITIAL SETUP:

Applicable Models	Equipment Condition Reference	Condition Description
M151A2		None

Test Equipment

None

Special Tools

Hydraulic jack
Four trestles
Mechanical puller

Special Environmental Conditions

None

Materials/Parts

Cotter pin
Eight crossmember locknuts
Four differential flange guard lockwashers
Four propeller shaft cross assembly lockwashers
Three center link and idler arm assembly lockwashers

Personnel Required

One mechanic

General Safety Instructions

None

Manual References

TM 9-2320-218-20-1
TM 9-2320-218-34P

STEP NO.	LOCATION	ITEM	ACTION	REMARKS
a. REMOVAL				
1.	Differential flange guard (7) to front differential (3)	Two capscrews (6), lockwashers (5), and flat washers (4)	Remove.	Discard lockwashers (5).
2.	Differential flange guard (7) to front bumper (9)	Two nuts (2), lockwashers (1), and bolts (8)	Remove.	Discard lockwashers (1).

9-7. Front Suspension and Drive Assembly Removal and Installation (Cont'd)

STEP NO.	LOCATION	ITEM	ACTION	REMARKS
3.		Differential flange guard (7)	Remove from vehicle.	

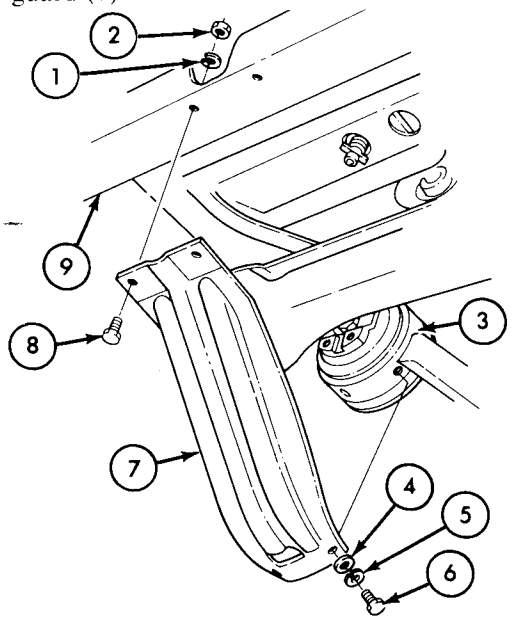

4.		Vehicle	Raise rear end using hydraulic jack and support each end of rear cross sill assembly (11) with trestle (10).	

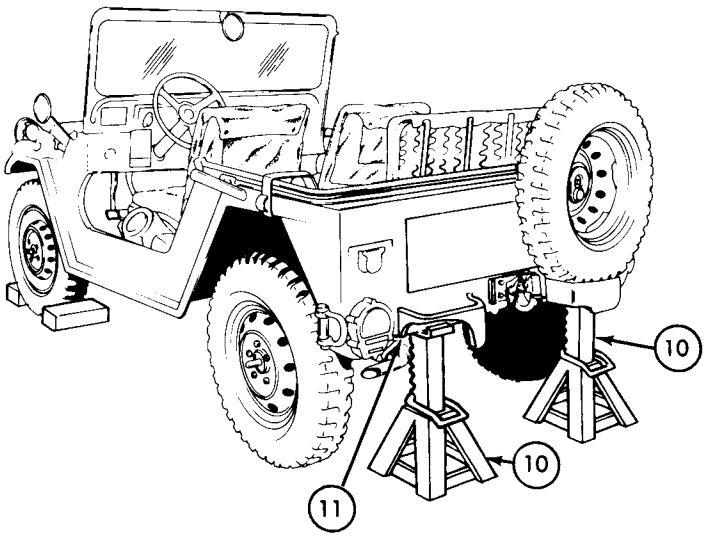

TA 156101

9-7. Front Suspension and Drive Assembly Removal and Installation (Cont'd)

STEP NO.	LOCATION	ITEM	ACTION	REMARKS
5.		Vehicle	*a.* Place hydraulic jack (1) under front differential (2).	
			b. Raise and support on body rails at rear of fender wells (5) using two trestles (4).	Keep hydraulic jack under differential (2) to support front suspension (3) during removal.
6.	Center link and idler assembly (7) to pitman arm (6)	Cotter pin (9) and nut (8)	Remove.	Discard cotter pin (9).
7.		Center link and idler assembly (7)	Remove from pitman arm (6).	Use mechanical puller (10).
8.	Center link and idler assembly (7) to vehicle body rail (11)	Three nuts (13), lockwashers (12), and capscrews (14)	Remove.	Discard lockwashers (12).

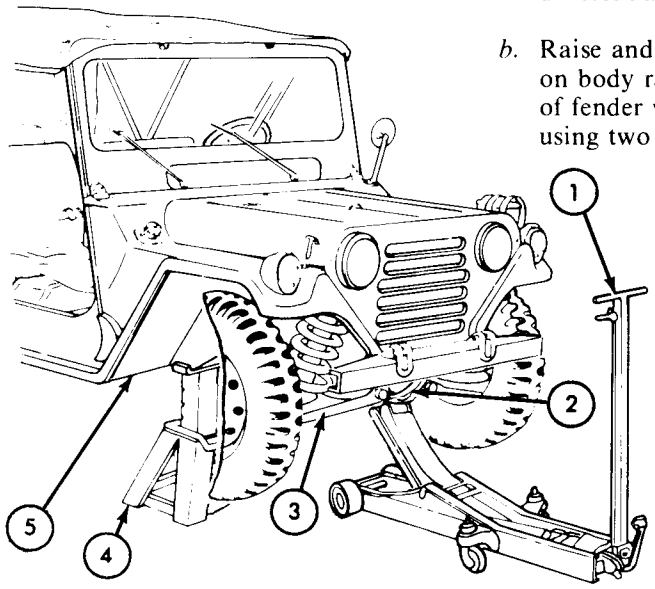

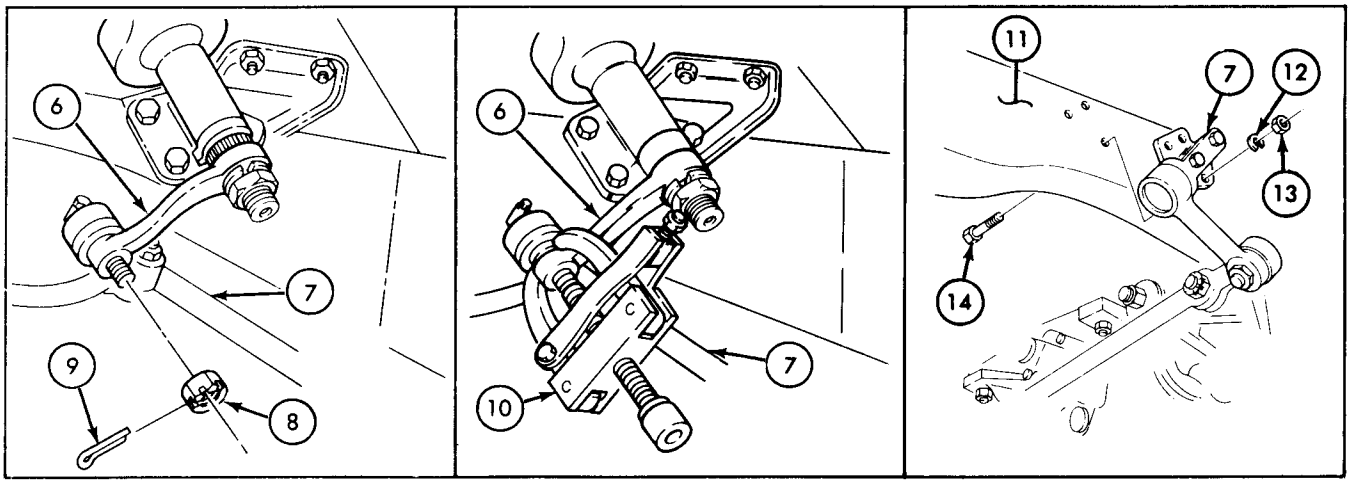

TA 156102

9-7. Front Suspension and Drive Assembly Removal and Installation (Cont'd)

STEP NO.	LOCATION	ITEM	ACTION	REMARKS
9.	Propeller shaft cross assembly (17) to differential pinion flange (16)	Four capscrews (19) and lockwashers (18)	Remove.	Discard lockwashers (18).
10.		Propeller shaft (15)	Remove from differential pinion flange (16).	

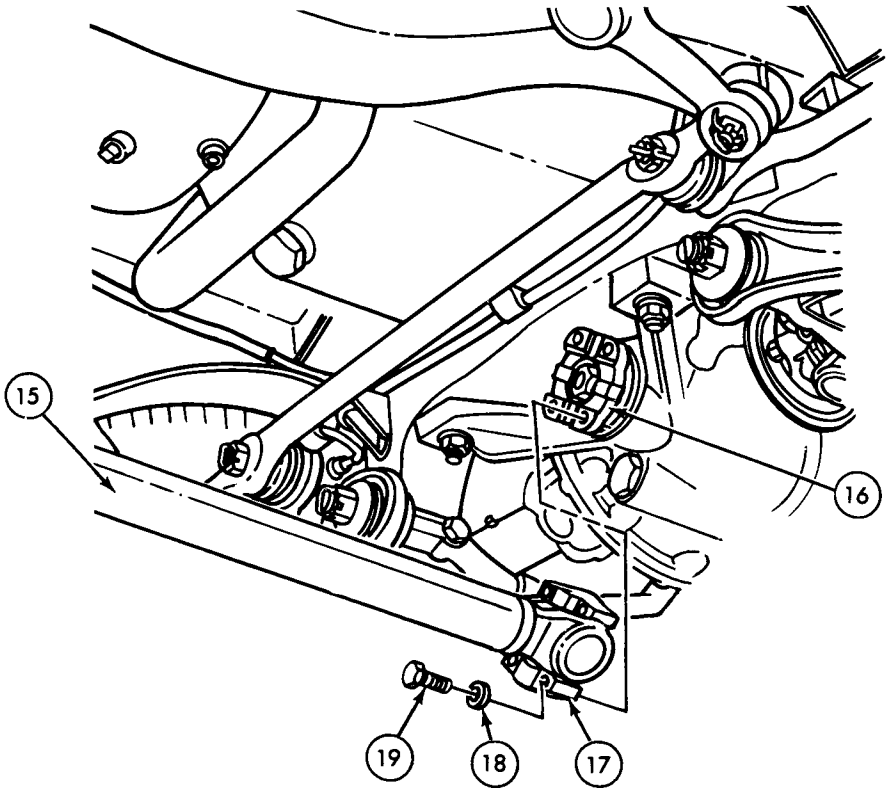

TA 156103

9-7. Front Suspension and Drive Assembly Removal and Installation (Cont'd)

STEP NO.	LOCATION	ITEM	ACTION	REMARKS
11.	Brake line (1) to tee fitting (3)	Flare nut (2)	Unscrew.	

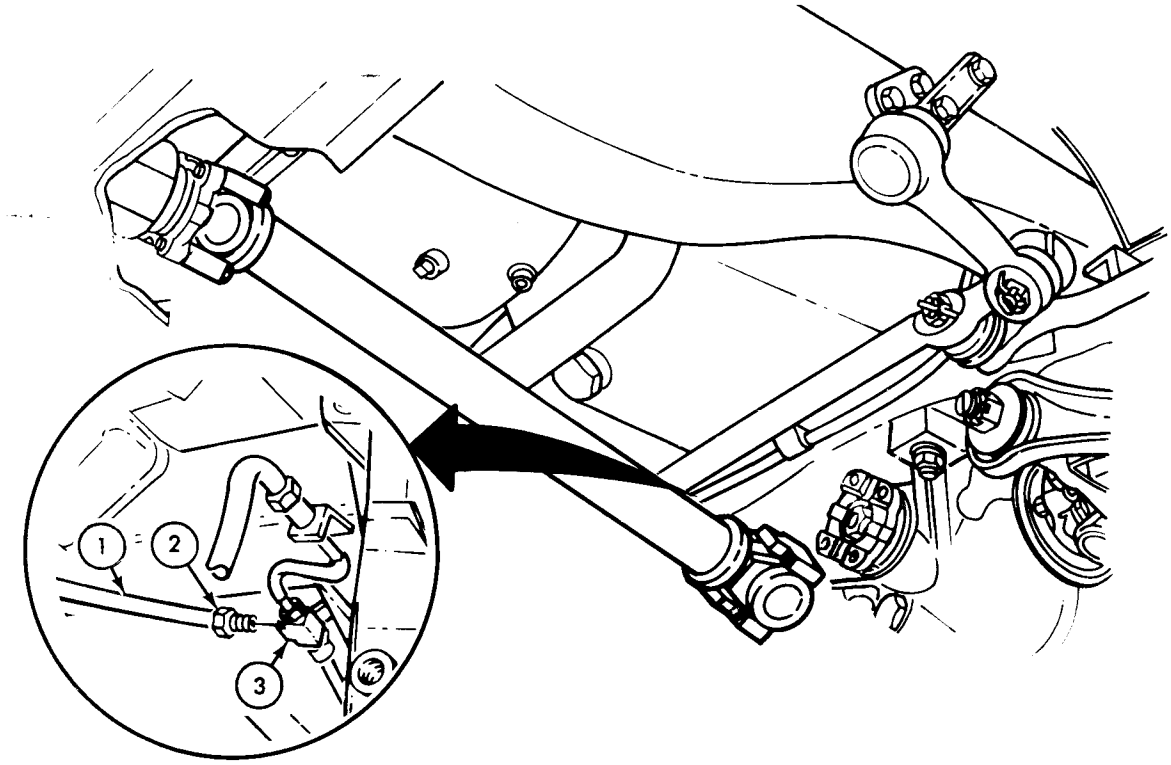

NOTE

Three different capscrew lengths are used to secure crossmember. Note position of capscrews for installation.

TA 156104

9-7. Front Suspension and Drive Assembly Removal and Installation (Cont'd)

STEP NO.	LOCATION	ITEM	ACTION	REMARKS
12.	Crossmember (5) to body rails (12)	Two front capscrews (10), flat washers (11), and locknuts (4)	Remove.	Discard locknuts (4).
13.	Crossmember (5) to body rails (12)	Two rear capscrews (7), flat washers (6), and locknuts (4)	Remove.	Discard locknuts (4).
14.	Crossmember (5) to body rails (12)	Four inner capscrews (9), flat washers (8), and locknuts (4)	Remove.	Discard locknuts (4).

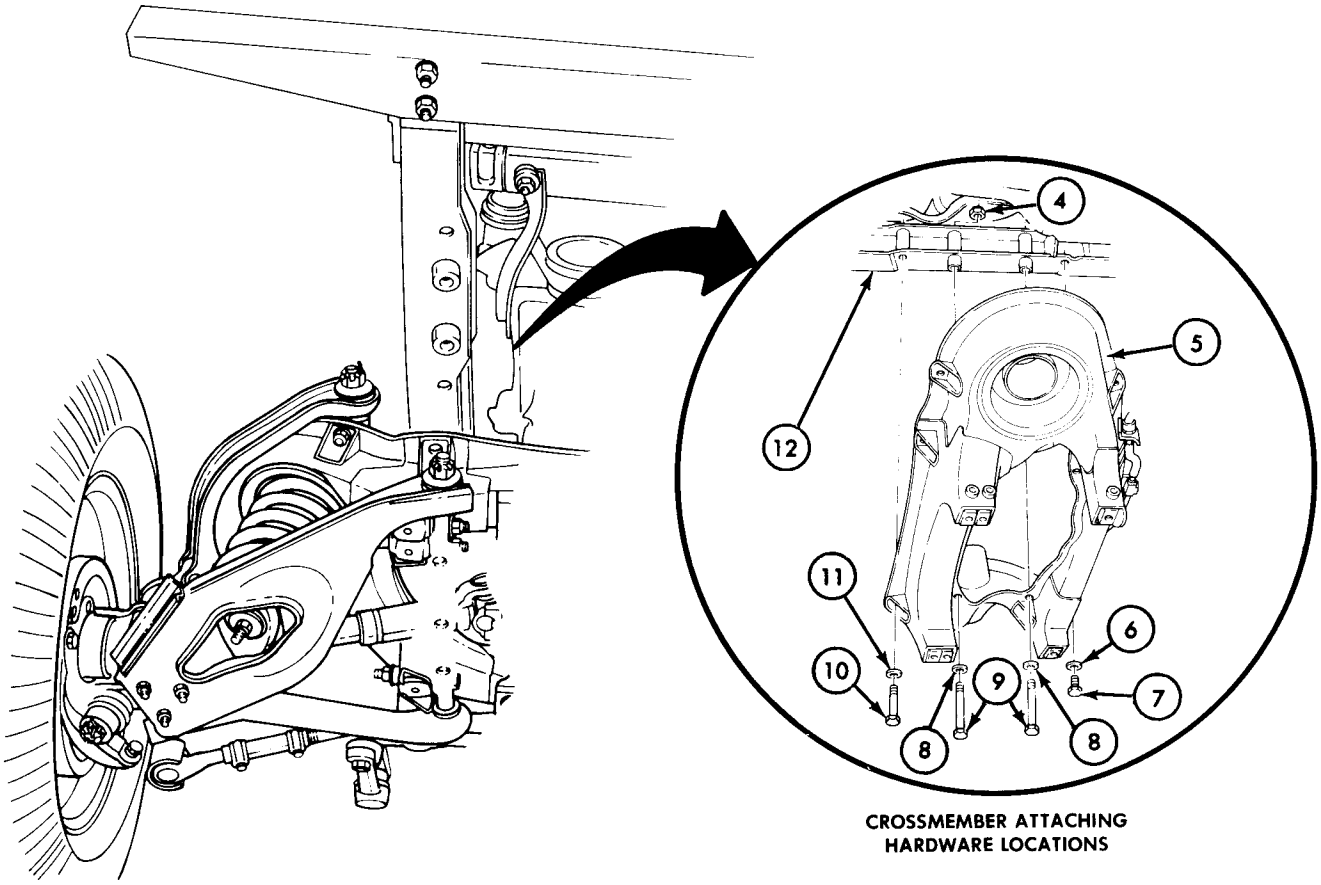

CROSSMEMBER ATTACHING HARDWARE LOCATIONS

TA 156105

9-7. Front Suspension and Drive Assembly Removal and Installation (Cont'd)

STEP NO.	LOCATION	ITEM	ACTION	REMARKS

CAUTION

Do not remove hydraulic jack (1) when rolling front suspension and drive assembly (2) on its tires. The suspension will tip over and cause damage if not supported.

15.		Front suspension and drive assembly (2)	Lower and roll forward from under vehicle with hydraulic jack (1).

NOTE

See TM 9-2320-218-20-1-2 for individual front suspension component removal and installation instructions.

b. INSTALLATION

16.		Front suspension and drive assembly (2)	*a.* Roll into position under front of vehicle. *b.* Raise with hydraulic jack (1).

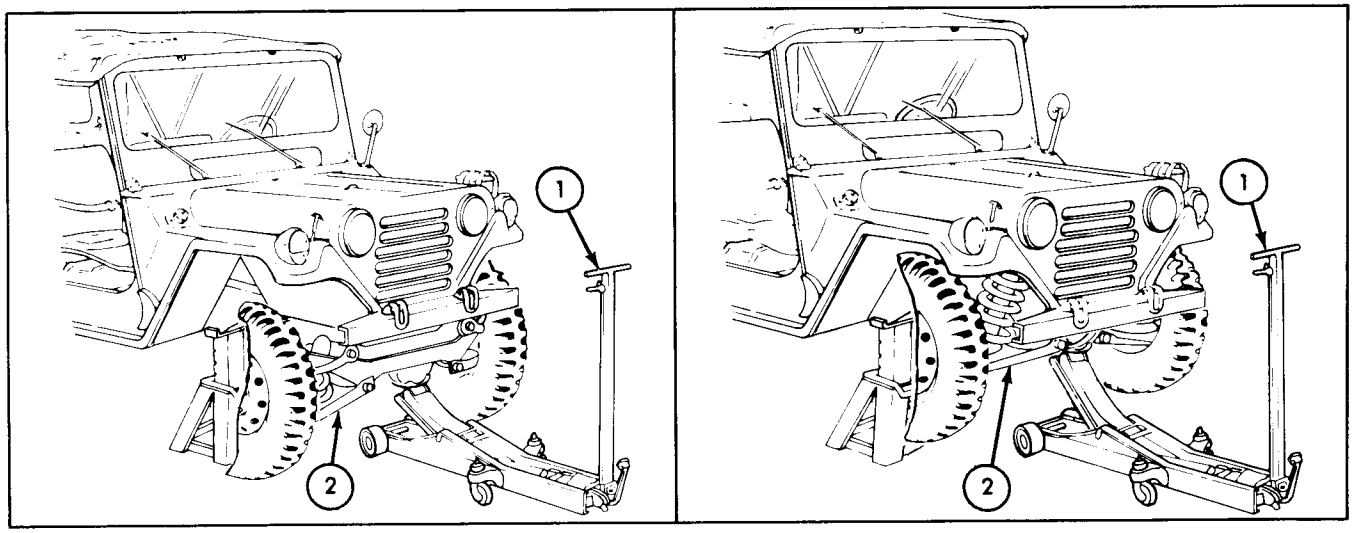

17.		Crossmember (5)	*a.* Position to body rails (4).

NOTE

Three different capscrew lengths are used to secure crossmember. Use noted locations for correct installation.

TA 156106

9-7. Front Suspension and Drive Assembly Removal and Installation (Cont'd)

STEP NO.	LOCATION	ITEM	ACTION	REMARKS
			b. Secure at inner holes with four long capscrews (9), flat washers (8), and new locknuts (3).	
			c. Secure at rear of crossmember (5) with two short capscrews (7), flat washers (6), and new locknuts (3).	
			d. Secure front of crossmember (5) with two remaining capscrews (10), flat washers (11), and new locknuts (3).	Tighten eight capscrews 27-37 lb-ft (36-50 N•m).

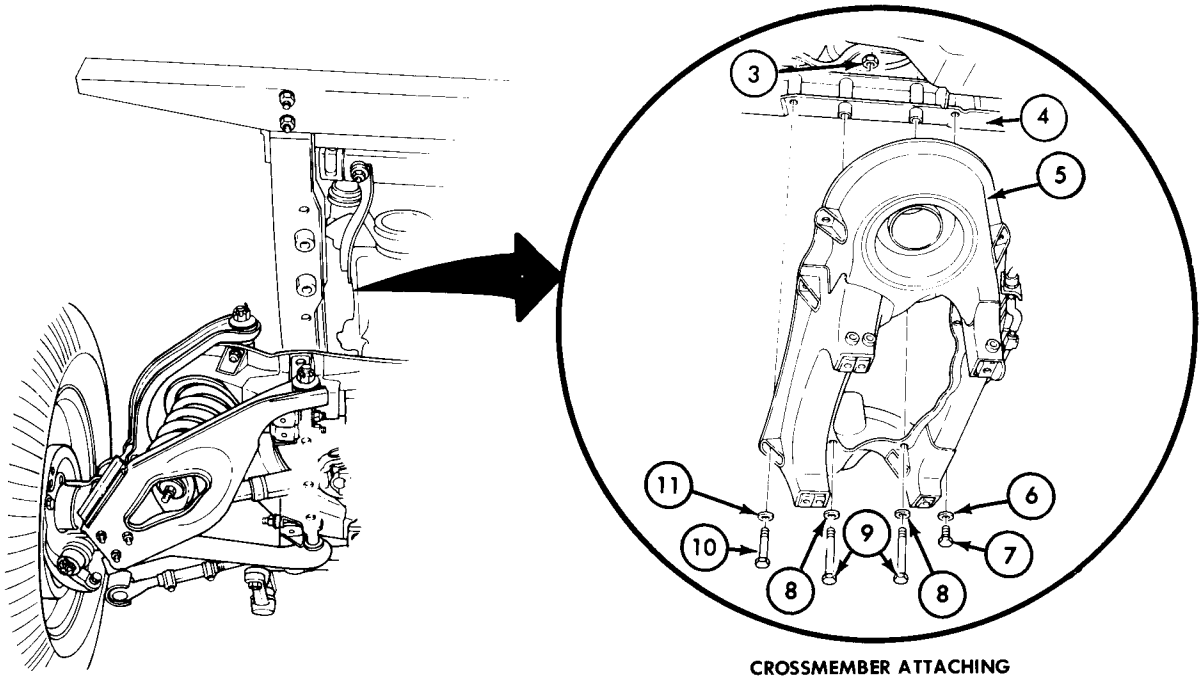

CROSSMEMBER ATTACHING HARDWARE LOCATIONS

TA 156107

9-7. Front Suspension and Drive Assembly Removal and Installation (Cont'd)

STEP NO.	LOCATION	ITEM	ACTION	REMARKS
18.		Hydraulic jack (1)	Lower and remove from vehicle.	

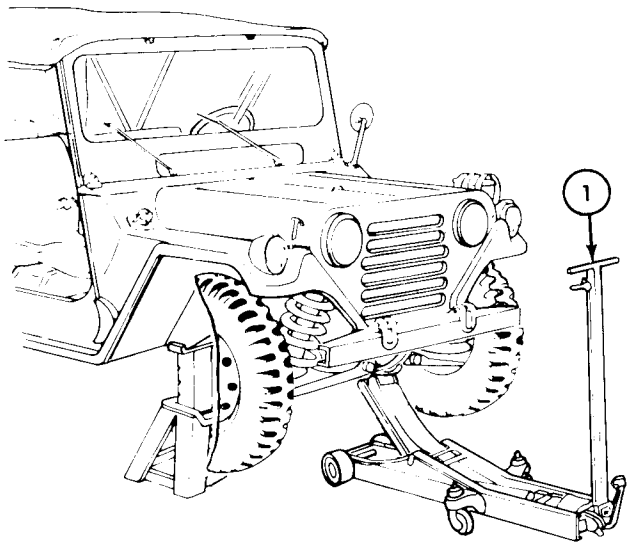

19.		Brake line flare nut (2)	Connect to tee fitting (3) and tighten.	
20.		Propeller shaft cross assembly (5)	Secure to differential pinion flange (4) with four new lockwashers (6) and capscrews (7).	Tighten 15-20 lb-ft (20-27 N•m).

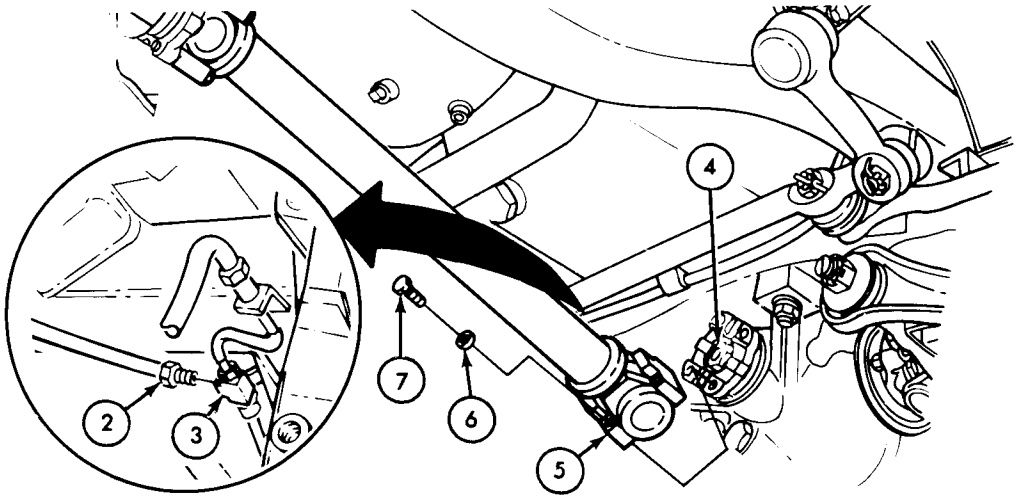

TA 156108

9-7. Front Suspension and Drive Assembly Removal and Installation (Cont'd)

STEP NO.	LOCATION	ITEM	ACTION	REMARKS
21.		Center link and idler assembly (9)	*a.* Secure to vehicle body rail (8) with three capscrews (12), new lockwashers (10), and nuts (11).	Tighten 24-36 lb-ft (33-49 N•m).
			b. Secure to pitman arm (13) with nut (14) and new cotter pin (15).	Tighten 35-45 lb-ft (47-61 N•m).

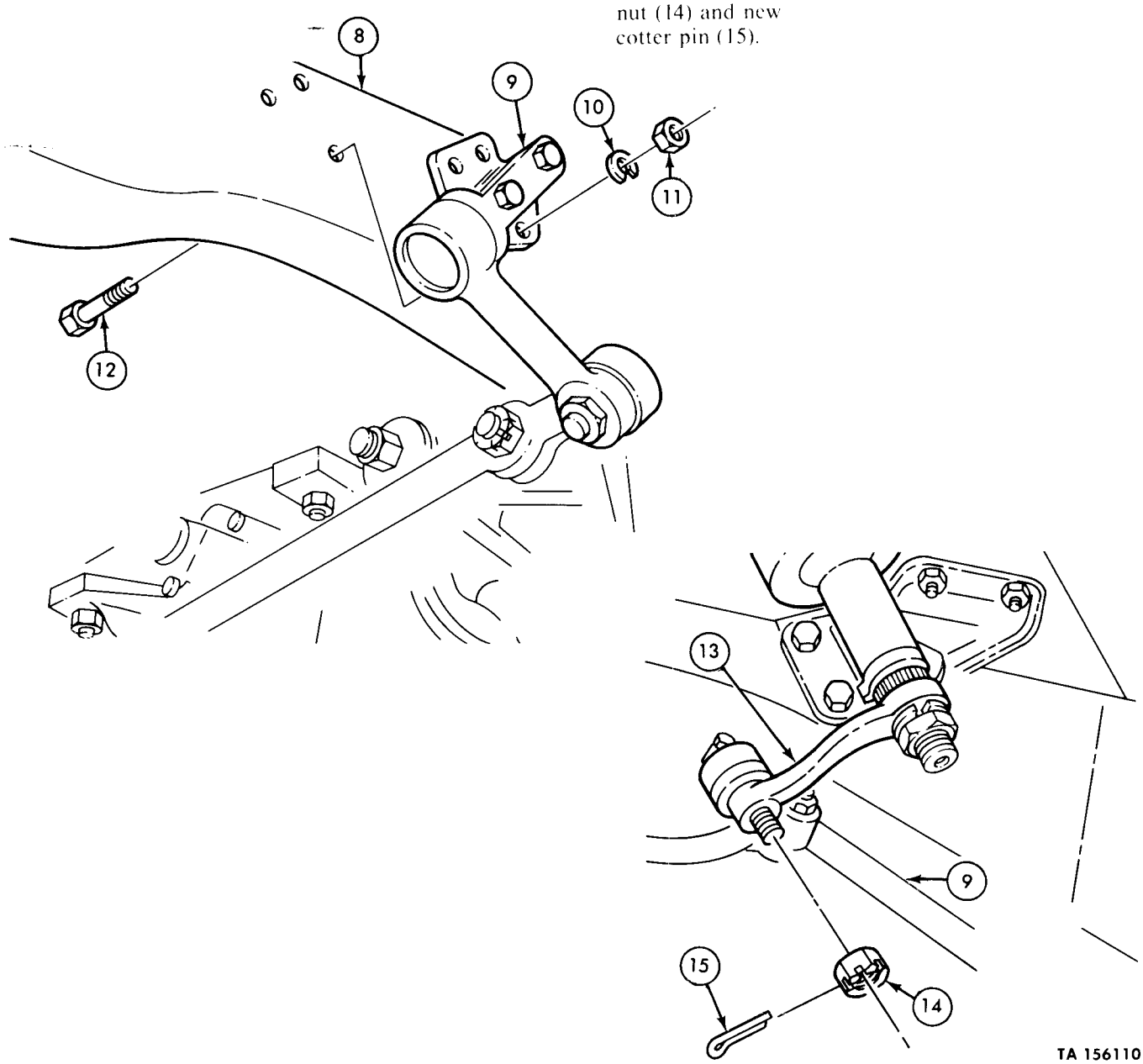

TA 156110

9-7. Front Suspension and Drive Assembly Removal and Installation (Cont'd)

STEP NO.	LOCATION	ITEM	ACTION	REMARKS
22.		Differential flange guard (7)	*a.* Secure to underside of front bumper (9) with two bolts (8), new lockwashers (1), and nuts (2). *b.* Secure to front differential (3) with two flat washers (4), new lockwashers (5), and capscrews (6).	

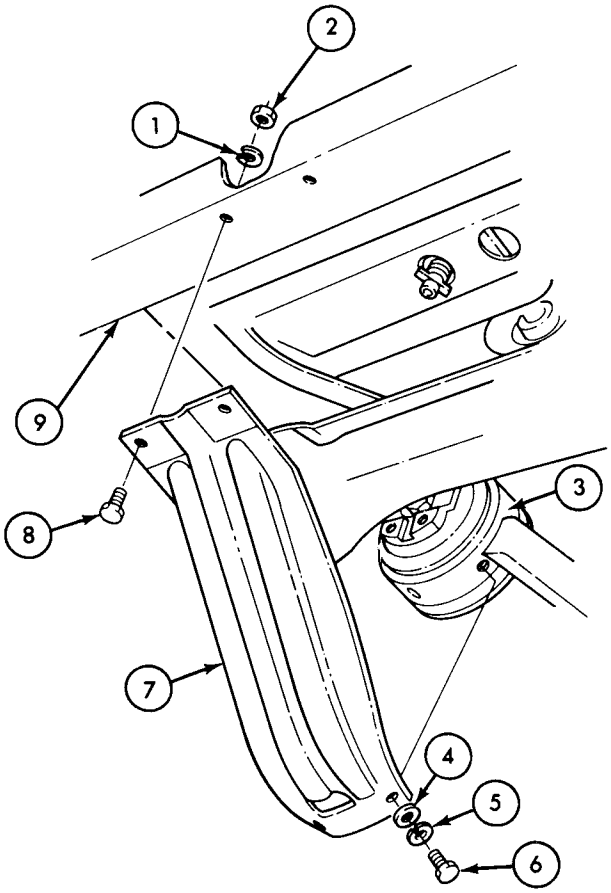

TA 156109

9-7. Front Suspension and Drive Assembly Removal and Installation (Cont'd)

STEP NO.	LOCATION	ITEM	ACTION	REMARKS
23.		Vehicle	Raise each end using hydraulic jack (10) and remove four trestles (11).	
24.		Hydraulic jack (10)	Lower and remove from vehicle.	

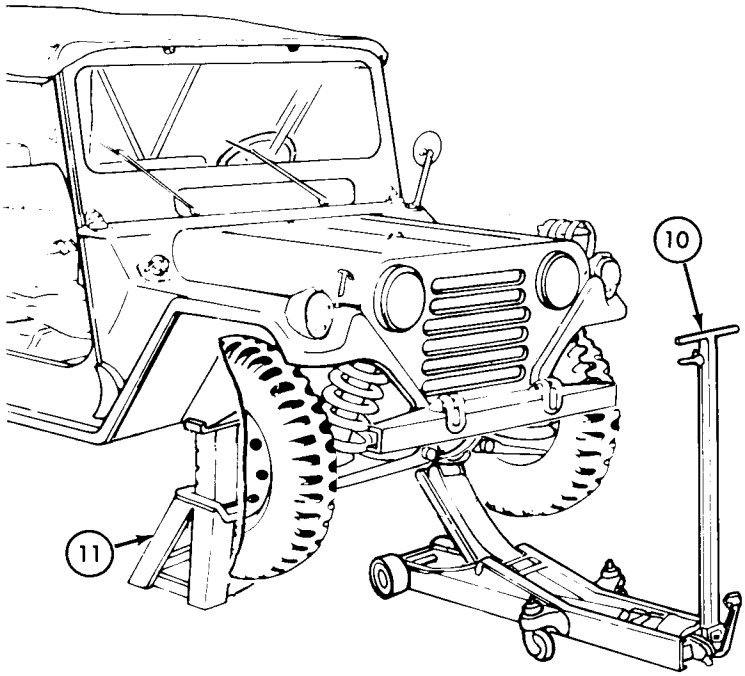

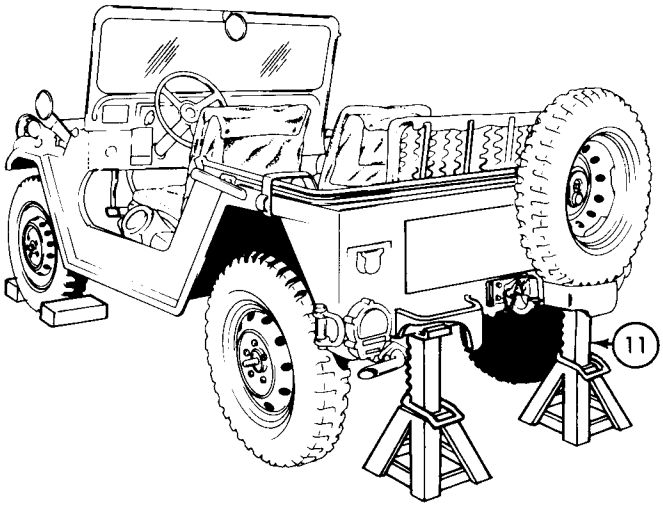

END OF TASK!

FOLLOW-ON TASK: Bleed brakes (TM 9-2320-218-20-1-2).

TA 156111

9-8. General Cleaning Instructions

WARNING

Drycleaning solvent is flammable and will not be used near an open flame. A fire extinguisher will be kept nearby when solvent is used. Use only in well-ventilated places. Failure to do this may result in injury to personnel and/or damage to equipment.

a. All metal front suspension components should be thoroughly cleaned with drycleaning solvent.

b. If parts are being steam cleaned, direct pressure away from all non-metal areas. Do not use caustic soda in steam cleaners.

WARNING

Compressed air source will not exceed 30 psi. When cleaning with compressed air, eyeshields must be worn. Failure to wear eyeshields may result in injury to the eyes and loss of sight.

c. Dry parts with compressed air directing pressure away from non-metal areas.

d. Components that have been steam cleaned will be oiled immediately to prevent surface oxidation. Suitable eye protection must be used during all cleaning procedures.

9-9. General Inspection and Repair of Front Suspension Components

This task covers:

Inspection and Repair

INITIAL SETUP:

Applicable Models
All

Equipment Condition Reference
Para 9-7
or
TM 9-2320-218-20-1-2

Condition Description
Front suspension and drive assembly or individual front suspension components removed as applicable.

Test Equipment
None

Special Tools
None

Special Environmental Conditions
None

Materials/Parts
Crocus cloth

Personnel Required
One mechanic

General Safety Instructions
None

Manual References
TM 9-2320-218-20-1-2
TM 9-2320-218-34P

STEP NO.	LOCATION	ITEM	ACTION	REMARKS
INSPECTION AND REPAIR				
1.		Cast and machined components	*a.* Inspect for wear, grooves, nicks, burrs, and scratches.	Remove minor nicks, scratches, and burrs with crocus cloth. If worn, replace (see table 9-2 for wear limits). If badly grooved, nicked, or scratched, replace.
			b. Inspect for cracks and breaks.	Replace if cracked or broken.
			c. Inspect thread openings for strips and damage.	If threads are damaged, repair with tap or die. If threads cannot be repaired, replace component.

9-9. Inspection and Repair of Front Suspension Components (Cont'd)

STEP NO.	LOCATION	ITEM	ACTION	REMARKS
2.		Thrust washers	Inspect for distortion, burrs, scratches, and wear.	If badly distorted, scratched, or worn, replace. Remove burrs with crocus cloth.
3.		Seals, bushings, and mating surfaces	*a.* Inspect for scoring, cuts and hardness.	If scored, cut, or hard, replace.
			b. Inspect mating surfaces for wear, scratches, or nicks.	Repair minor scratches and nicks with crocus cloth. If badly scratched or nicked, replace both seal and mating surface. If worn, replace (see table 9-2 for wear limits).
4.		Splined components	Inspect for stripped, chipped, burred, or twisted splines.	Repair minor chips and burrs with a soft stone or crocus cloth. If splines are stripped or twisted, replace component.
5.		Threaded parts	Inspect for damaged threads.	Use a thread file, tap, or die to restore threads. If threads are not repairable, replace component.
6.		Springs	Inspect for weak, distorted and broken coils.	Replace if coils are weak, distorted, or broken (see table 9-2 for free length limits).

END OF TASK!

Section III. FRONT SUSPENSION MAINTENANCE

9-10. General

This section provides maintenance authorized at general support and direct support levels for the front suspension system. To find a specific task, see the front suspension maintenance task summary below:

9-11. Front Suspension Maintenance Task Summary

9-12. Upper and Lower Front Suspension Arm Bushing Replacement

This task covers:

a. Removal
b. Cleaning, Inspection, and Repair
c. Installation

INITIAL SETUP:

Applicable Models
All

Equipment Condition Reference	Condition Description
TM 9-2320-218-20-1-2	Front suspension arm removed.

Test Equipment
None

Special Tools
Arbor press
Bushing driver
Torque wrench (0-175 lb-ft)

Special Environmental Conditions
None

Materials/Parts
Front suspension arm bushing kit

Personnel Required
One mechanic

General Safety Instructions
Wear eye protection during all cutting, cleaning, welding, and pressing operations.

Manual References
TM 9-2320-218-20-1-2
TM 9-2320-218-34P

STEP NO.	LOCATION	ITEM	ACTION	REMARKS

NOTE

- The suspension arm bushing kit is used for either upper or lower suspension
- When replacing a bushing, replace both bushings on the same suspension arm.

a. REMOVAL

1.	Suspension arm shaft (4) to suspension arm (6)	Two cotter pins (1), slotted nuts (2), and outer retainers (3)	Remove.	Discard cotter pins (1) slotted nuts (2), and outer retainers (3).

9-12. Upper and Lower Front Suspension Arm Bushing Replacement (Cont'd)

STEP NO.	LOCATION	ITEM	ACTION	REMARKS
		WARNING Wear eye protection during grinding, cutting, and pressing operations. Failure to do so will result in severe eye injury.		
2.	Suspension arm (6)	Two bushing sleeves (5) and (7)	Grind or cut eight tack welds and loosen.	
3.		Arbor press (8) and bushing driver (9)	*a.* Place on long bushing (10) and shaft (4). *b.* Press toward short bushing (11).	

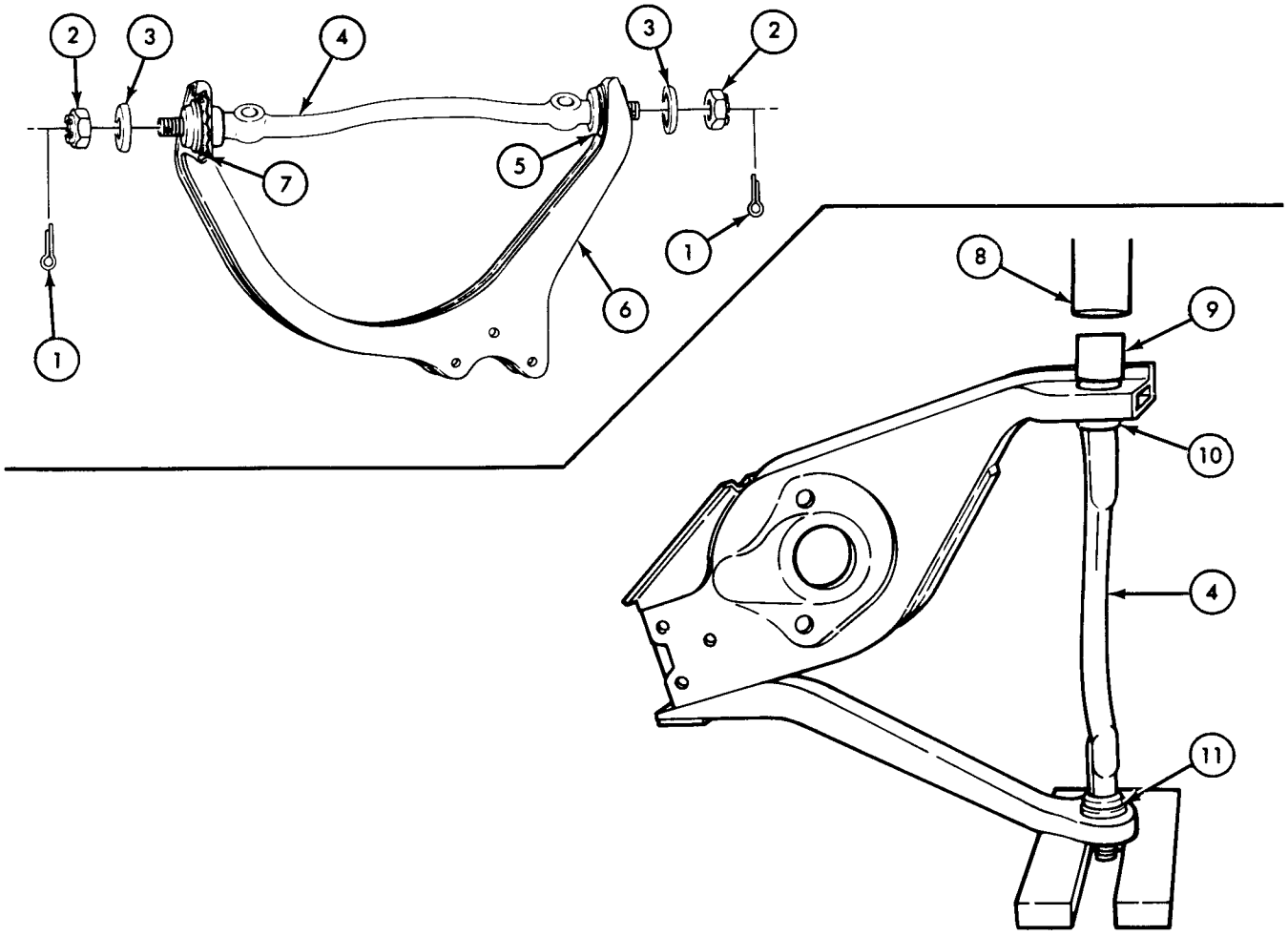

TA 156112

9-12. Upper and Lower Front Suspension Arm Bushing Replacement (Cont'd)

STEP NO.	LOCATION	ITEM	ACTION	REMARKS
4.		Short bushing (1) and short bushing sleeve (2)	Pull off of shaft (3).	Discard short bushing (1) and short bushing sleeve (2).
5.	Suspension arm (8)	Shaft (3)	Angle away from arm hole (7) and slide toward long bushing (6) and remove.	
6.		Inner retainer (4), long bushing (6), and long bushing sleeve (5)	Pull off of shaft (3).	Discard inner retainer (4), long bushing (6), and long bushing sleeve (5).

b. CLEANING, INSPECTION, AND REPAIR

NOTE

- General cleaning instructions can be found in paragraph 9-8.
- General inspection and repair instructions can be found in paragraph 9-9.

c. INSTALLATION

7.		Two new bushing sleeves (5) and (2)	Place in suspension arm (8) and secure with eight tack welds (four per arm).	Tack weld in accordance with MIL-STD-1261 class 2. Use 3/32 in. (2.38 mm) welding rod-7018, 80-90 amps and weld four places 90° apart.

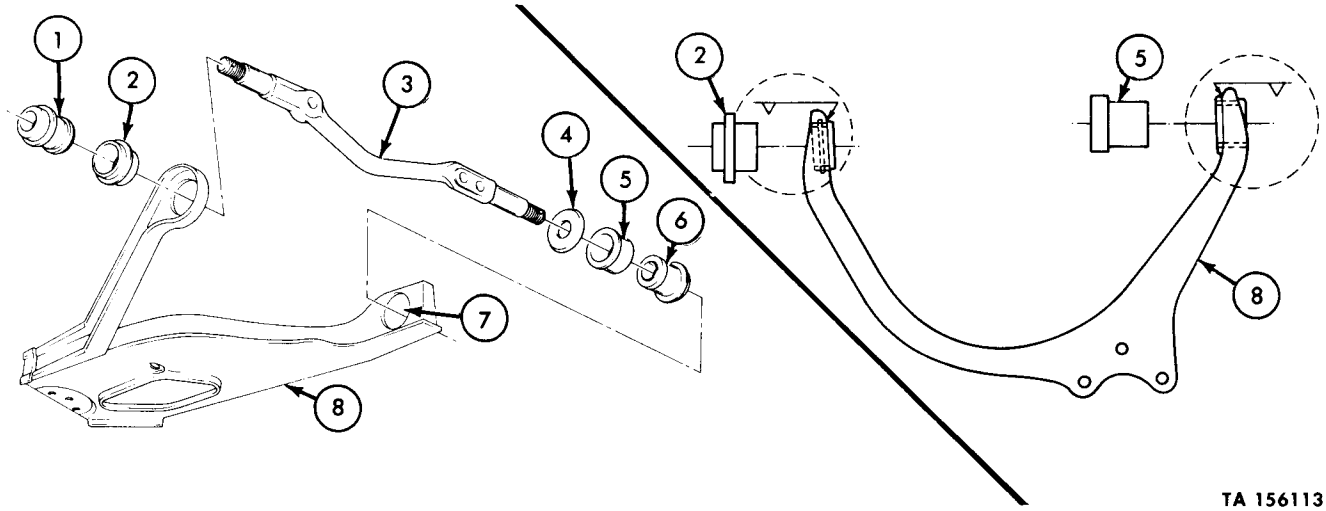

TA 156113

9-12. Upper and Lower Front Suspension Arm Bushing Replacement (Cont'd)

STEP NO.	LOCATION	ITEM	ACTION	REMARKS
8.		New long bushing (6)	Install in bushing sleeve (5).	Use bushing driver.
9.		Shaft (3)	*a.* Place new retainer (4) on long end (12) and position short end through short bushing sleeve (2).	
			b. Slide long bushing end (12) toward long bushing (6) until retainer (4) seats against bushing (6).	
10.		New short bushing (1)	Place on shaft (3) and install into short bushing sleeve (2).	Use bushing driver.
11.		Two new outer retainers (11)and slotted nuts (10)	Install on ends of shaft (3).	Tighten 50-60 lb-ft (68-81 N•m).
12.		Two new cotter pins (9)	*a.* Install in shaft (3) through slotted nuts (10).	
			b. Bend ends around nut (10).	

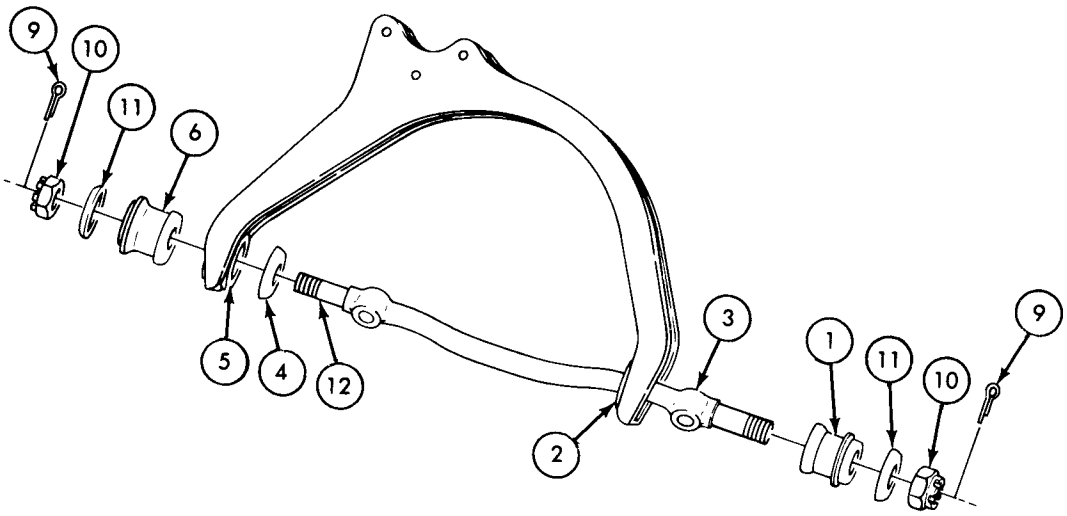

END OF TASK!

FOLLOW-ON TASK: • Install front suspension arm (TM 9-2320-218-20-1-2).

TA 156114

9-13. Front Suspension Alinement Instructions

This task covers:

a. Turning Radius Gage Assembly
b. Turning Radius Check and Adjustment
c. Camber, Kingpin Inclination, and Caster Check
d. Caster and Camber Adjustment
e. Front Wheel Toe-In Alinement
f. Steering Wheel Spoke Position Alinement

INITIAL SETUP:

Applicable Models
All

Test Equipment
Camber and caster gage set

Special Tools
Torque wrench (0-175 lb-ft)

Materials/Parts
None

Personnel Required
One mechanic

Manual References
TM 9-2320-218-10
TM 9-2320-218-20-1-2
TM 9-237

Equipment Condition Reference	Condition Description
TM 9-2320-218-10	All four tires properly inflated.
TM 9-2320-218-20-1-2	Wheel bearings properly adjusted.

Special Environmental Conditions
Vehicle on level surface.

General Safety Instructions
None

STEP NO.	LOCATION	ITEM	ACTION	REMARKS

NOTE

- When performing this procedure on M825 vehicles, the 106 mm rifle kit and ammunition load must be removed.
- The alinement check will be made on a level surface without removing fixed payload such as radio sets and other auxiliary equipment normally carried provided it is not in excess of 250 lbs (114 kg).
- Front tires must be in the straight ahead position with the pitman arm and front tires in correct alinement.

9-13. Front Suspension Alinement Instructions (Cont'd)

STEP NO.	LOCATION	ITEM	ACTION	REMARKS
a. TURNING RADIUS GAGE ASSEMBLY				
1.		Two rods (1)	Secure to pointer assembly (2).	
2.		Pointer assembly (2) and rods (1)	Secure to container base (3) with pivot pin (4).	
b. TURNING RADIUS CHECK AND ADJUSTMENT				
3.		Two turning radius gages (5)	*a.* Place one against each outer tire surface (7). *b.* Position container base (3) 3 in. (76.0 mm) from outer tire surface (7).	
4.		Pointer (9)	Center with lifting eye (6) and aline with zero degree mark on base scale (8).	

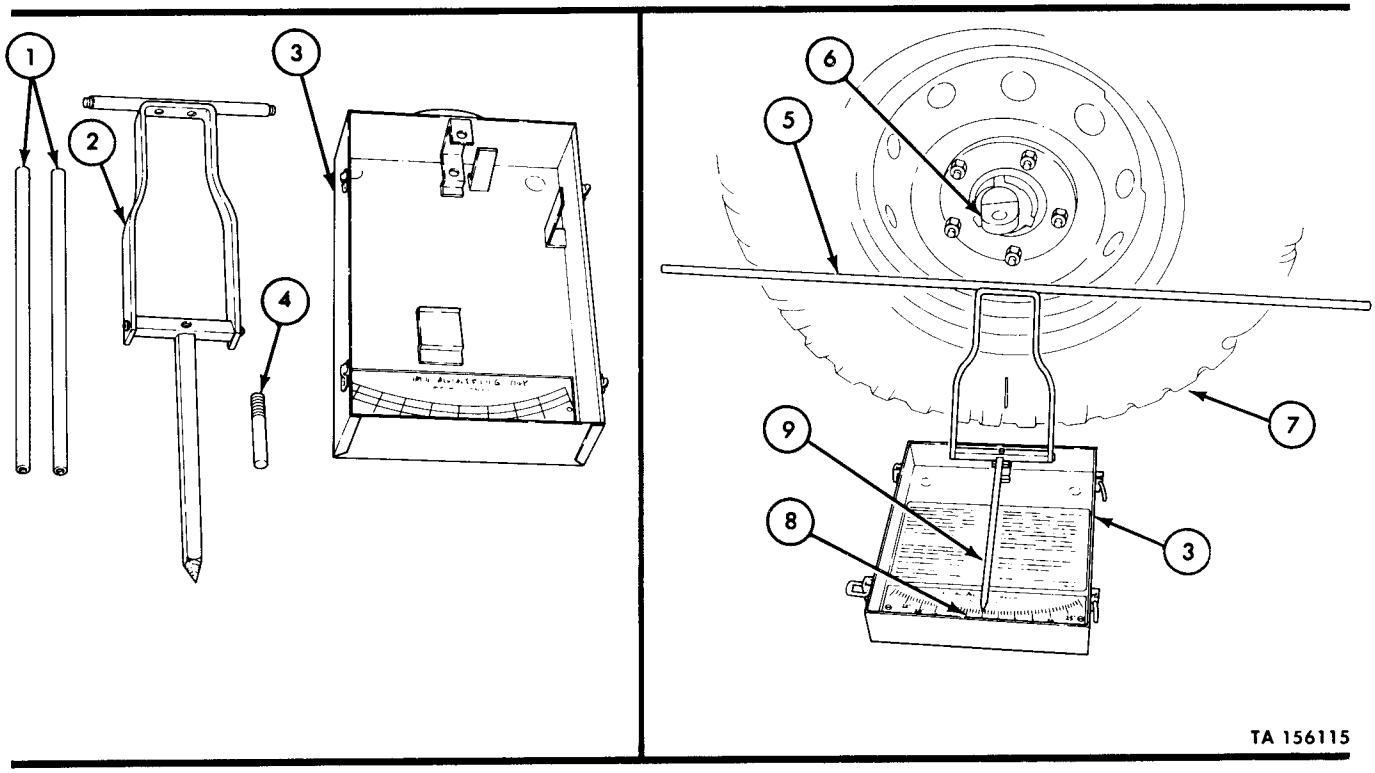

9-13. Front Suspension Alinement Instructions (Cont'd)

STEP NO.	LOCATION	ITEM	ACTION	REMARKS
5.		Left front tire (2)	Turn outward to stop.	
6.		Left turning radius gage (1)	Read degrees of travel.	Correct travel is 30 to 31-1/2 degrees.
		NOTE		
		If steering stop bolt is tack welded to spindle support and turning radius needs adjustment, cut welds, remove stop bolt, and install new stop bolt (4).		
7.	Left front wheel spindle support (3)	Steering stop bolt (4)	*a.* If travel reading is below 30 degrees, screw in.	
			b. If travel reading is over 31-1/2 degrees, screw out.	
			c. Repeat steps 4, 5, and 6 until correct travel reading is obtained.	
			d. Tack weld to spindle support (3).	See TM 9-237.
8.		Right front tire	Repeat steps 5, 6, and 7 to check and adjust turning radius.	
9.		Two turning radius gages (1)	Remove from front tires.	
		NOTE		
		After adjustments, the vehicle should have a maximum turning radius of 18.5 ft. (5.6 m), measured from centerline of the outside front wheel, when completing full turns right and left.		

9-13. Front Suspension Alinement Instructions (Cont'd)

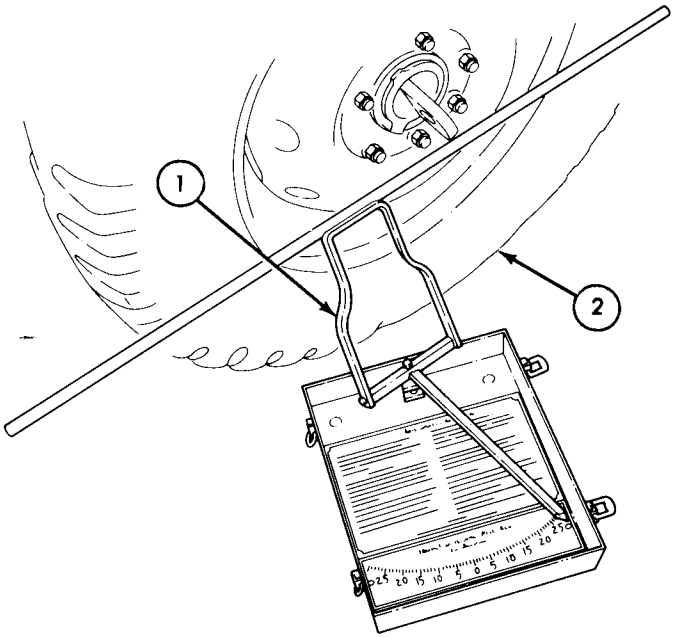

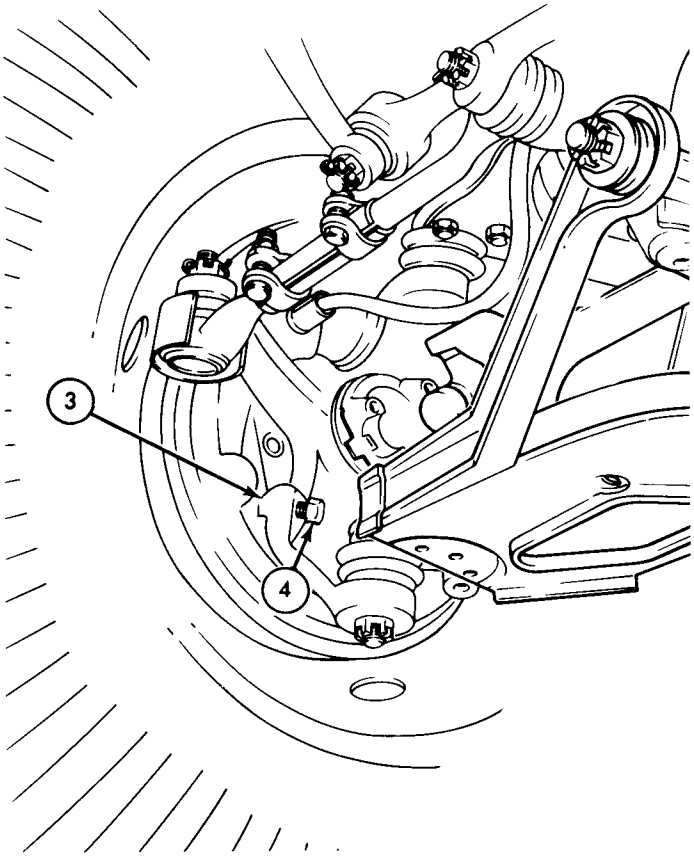

TA 156116

9-13. Front Suspension Alinement Instructions (Cont'd)

STEP NO.	LOCATION	ITEM	ACTION	REMARKS
			c. CAMBER, KINGPIN INCLINATION, AND CASTER CHECK	
			NOTE Roll vehicle forward at least 3 ft. (1 m) to force wheel angle to normal driving position.	
10.		Camber and caster gage (4)	*a.* Secure to left front lifting eye (1) with clamp (2).	Instrument face (6) should be mounted upside down on lifting eye (1).
			b. Calibrate by moving ball and socket area of clamp (2) until bubble is properly alined in sight glass (3).	
11.		Tire (5)	*a.* Mark sidewall at center top and bottom.	
			b. Roll forward 180° until instrument face (6) is up.	Top mark will be at bottom and bottom mark will be at top.
12.		Instrument face (6)	*a.* Read camber.	Allowable camber is +1/2° to +1-3/4°. If camber is not +1/2° to +1-3/4°, see task *d* for adjustment.
			b. Adjust caster bubble to zero reading.	
13.		Two turning radius gages (7)	Position to left and right tires.	
14.		Left front tire (5)	*a.* Turn inward 20°.	
			b. Turn outward 40°.	

9-13. Front Suspension Alinement Instructions (Cont'd)

STEP NO.	LOCATION	ITEM	ACTION	REMARKS
		NOTE		
		Positive caster is indicated if bubble has moved from zero toward tire.		
15.		Instrument face (6)	Read caster.	Allowable caster is +1/2° to -1/2°. If not, see task *d* for adjustment.
		NOTE		
		Steering axis (kingpin inclination) is a "built-in" factor and will be correct unless related parts are bent. Inspect for bent or broken front suspension components (para 9-7).		
16.		Camber and caster gage (4)	*a.* Remove from lifting eye (1). *b.* Repeat steps 10 through 15 for right front tire.	
		NOTE		
		Allowable camber variation between left front and right front measurements is 1/2°.		

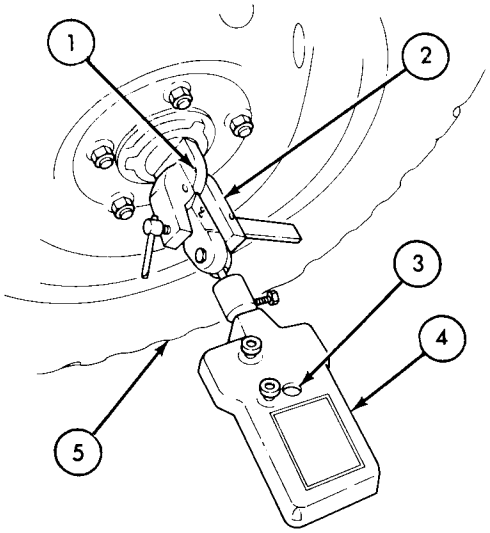

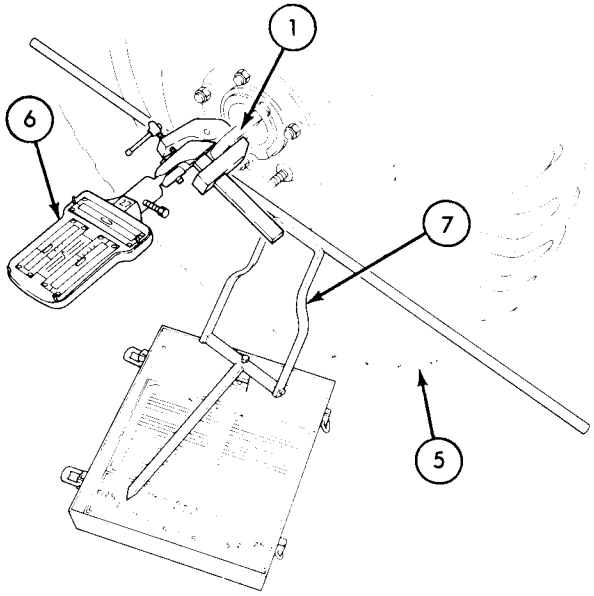

TA 156117

9-13. Front Suspension Alinement Instructions (Cont'd)

STEP NO.	LOCATION	ITEM	ACTION	REMARKS
	d. CASTER AND CAMBER ADJUSTMENT			
		CAUTION		
		Do not bend suspension components to correct misalinement of front suspension. Damage to equipment will result.		
		NOTE		
		Both caster and camber adjustments may be performed at the same time.		
17.	Lower suspension arm inner shaft (3) to cross-member (1)	Three bolts (2) and (4)	Loosen.	
18.			Adjust caster as follows:	
			a. Add or remove 0.060 in. (1.524 mm) shim (5) between arm shaft (3) and cross-member (1) at rear bolt (2) to change negative caster angle.	Each shim (5) added will increase, or each shim (5) removed will decrease negative caster angle by approximately 1/4 degree.
			b. Add or remove 0.060 in. (1.524 mm) shim (6) between arm shaft (3) and cross-member (1) at two front bolts (4) to change positive caster angle.	Each shim (6) added will increase, or each shim (6) removed will decrease positive caster angle by approximately 1/4 degree.
			c. Add or remove shims (6) until correct caster angle is obtained.	
		NOTE		
		Maximum shim stack thickness difference between rear bolt (2) and front two bolts (4) must not exceed 3/8 in. (9.52 mm). If, however, 3/8 in. (9.52 mm) difference is required to obtain correct alinement, check for worn, bent, and broken front suspension components (para 9-9).		
19.			Adjust camber as follows:	
			a. Add 0.060 in. (1.524 mm) shims (5) and (6) between arm shaft (3) and crossmember (1) at all three bolts (2) and (4) to increase camber angle.	Each shim (5) and (6) added will increase camber angle by approximately 1/4 degree.

9-13. Front Suspension Alinement Instructions (Cont'd)

STEP NO.	LOCATION	ITEM	ACTION	REMARKS
			b. Remove 0.060 in. (1.524 mm) shims (5) and (6) between arm shaft (3) and cross-member (1) at all three bolts (2) and (4) to decrease camber angle.	Each shim (5) and (6) removed will decrease camber angle by approximately 1/4 degree.
			c. Add or remove shims (5) and (6) as required to obtain correct camber angle.	
20.	Lower suspension arm inner shaft (3) to cross-member (1)	Three bolts (2) and (4)	Tighten.	Tighten two front bolts (4) 40-55 lb-ft (54-75 N•m). Tighten rear bolt (2) 45-65 lb-ft (61-88 N•m).

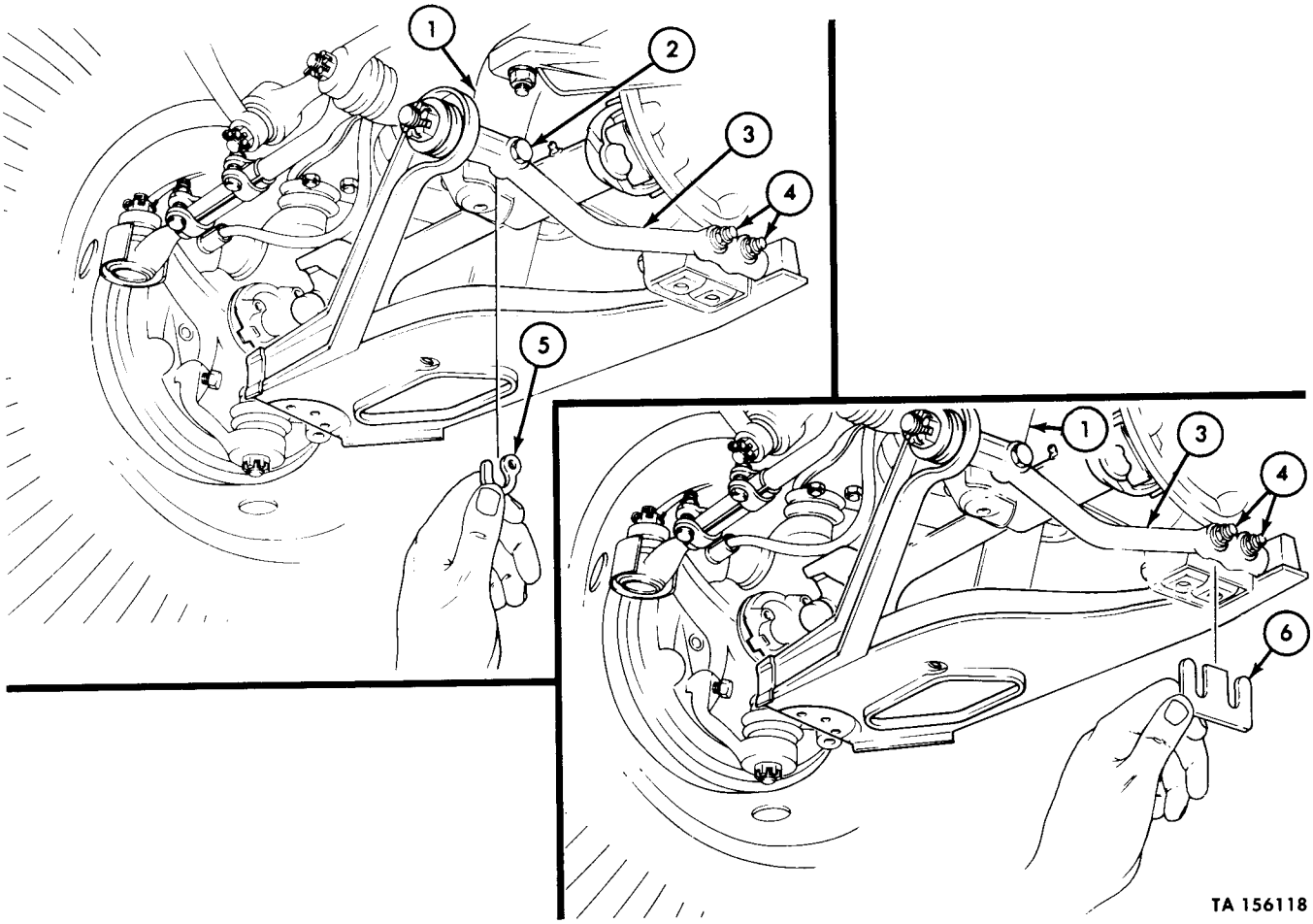

9-13. Front Suspension Alinement Instructions (Cont'd)

STEP NO.	LOCATION	ITEM	ACTION	REMARKS

e. FRONT WHEEL TOE-IN ALINEMENT

NOTE

Steering wheel spoke position alinement (task *f*) may be performed after front wheel toe-in alinement is completed but before tightening adjusting sleeve clamp nuts (1).

21.			Perform toe-in alinement.	See TM 9-2320-218-20-1-2.

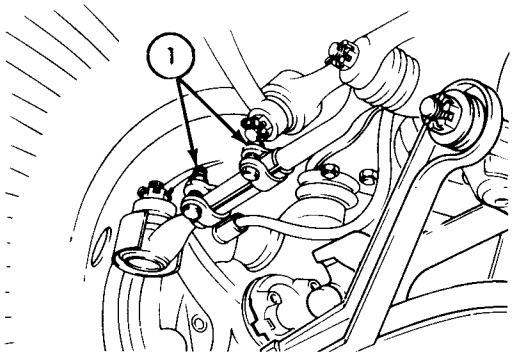

f. STEERING WHEEL SPOKE POSITION ALINEMENT

NOTE

Lower steering wheel spoke (7) with stamped diamond (8) should be in vertical position when front wheels are in straight ahead position. Perform alinement procedure if spoke (7) is left or right of vertical position.

22.	Clamps (3) to adjusting ing sleeve (2) and (5)	Four locknuts (1)	Loosen.	
23.		Two adjusting sleeves (2) and (5)	*a.* Turn to lengthen left tie rod (4) and shorten right tie rod (6) if lower steering wheel spoke (7) is right of vertical position.	Turn both sleeves equally in same direction.

TA 156119

9-13. Front Suspension Alinement Instructions (Cont'd)

STEP NO.	LOCATION	ITEM	ACTION	REMARKS
			b. Turn to shorten left tie rod (4) and lengthen right tie rod (6) if lower steering wheel spoke (7) is left of vertical position.	Turn both sleeves equally in same direction.
24.		Four adjusting sleeve clamp locknuts (1)	Tighten.	Tighten 12-15 lb-ft (16-20 N•m).
25.			Perform front wheel toe-in alinement check.	See TM 9-2320-218-20-1-2.

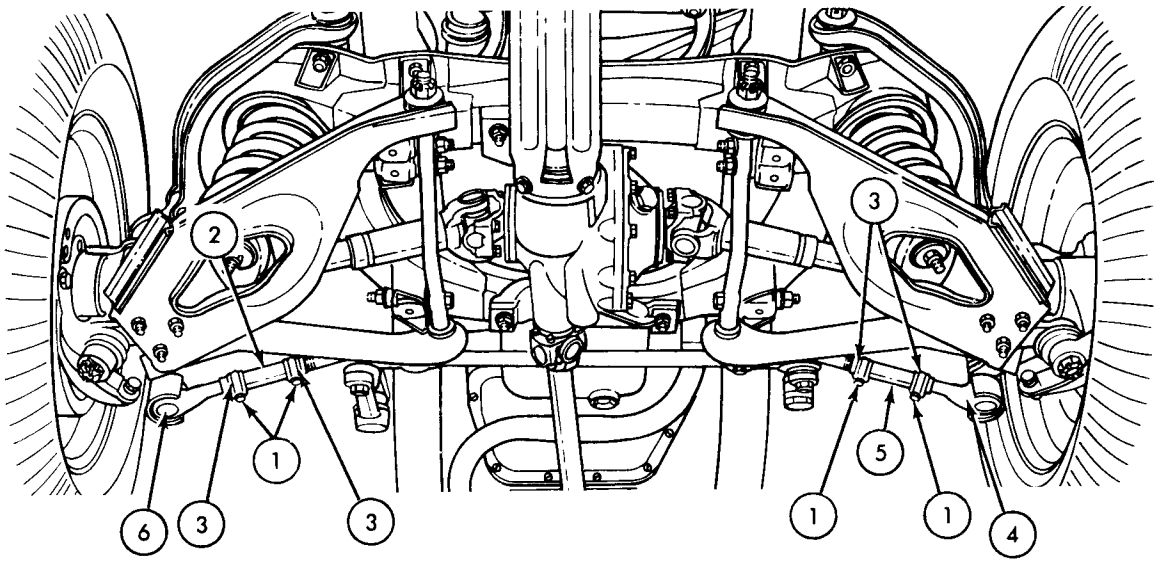

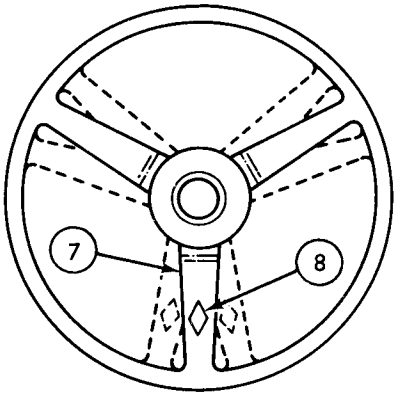

END OF TASK!

TA 156120

Section IV. REPAIR AND REPLACEMENT STANDARDS

9-14. General

This section provides repair and replacement standards pertaining to direct and general support for the front suspension. The repair and replacement standards included herein give minimum, maximum and key clearance of new or repaired parts. An asterisk (*) in the "wear limit" column indicates that a part should be replaced when worn beyond dimensions given in "size and fit of new parts" column. In "size and fit of new parts" column, the letter "L" indicates a loose fit (clearance) the letter "T" indicates a tight fit (interference).

9-15. Repair and Replacement Standards — Front Suspension

The components covered by the repair and replacement standard listed in table 9-2 are illustrated below. To find the component and its tolerance requirements, match the reference number listed to the extreme left in table 9-2.

Table 9-2. Repair and Replacement Standards — Front Suspension

Ref. No.	Point of Measurement	Size and Fit of New Parts	Wear Limits
1	Spring, free length	11.0 in. (27.94 cm)	*
2	Diameter of seal seat	2.2475-2.2525 in. (57.088-57.214 mm)	*
3	Bearing seat	1.3190-1.3195 in. (33.50-33.52 mm)	*
4	Inside diameter of bearing cone	1.6250-1.6255 in. 41.275-41.288 mm)	*
5	Outside diameter of bearing cup	2.8910-2.8920 in. (73.431-73.457 mm)	*

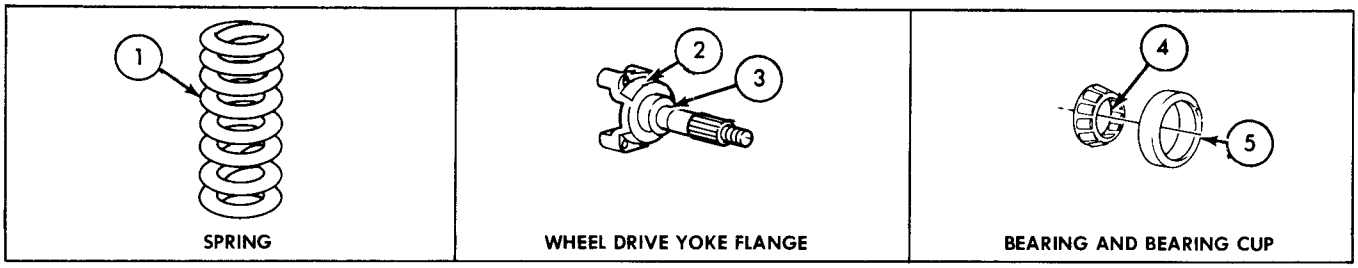

TA 156121

Table 9-2. Repair and Replacement Standards — Front Suspension (Cont'd)

Ref. No.	Point of Measurement	Size and Fit of New Parts	Wear Limits
6	Diameter of inner seal seat	2.9930-2.9975 in. (76.022-76.137 mm)	*
7	Diameter of outer seal seat	3.2585-3.2630 in. (82.766-82.880 mm)	*
8	Diameter of bearing bore	2.8895-2.8905 in. (73.393-73.419 mm)	*
9	Bearing seat, inside	1.624-1.625 in. (41.250-41.275 mm)	*
10	Bearing seat, outside	1.6255-1.6270 in. (41.288-41.326 mm)	*
11	Outside diameter of seal seat	2.7475-2.7525 in. (69.787-69.914 mm)	*

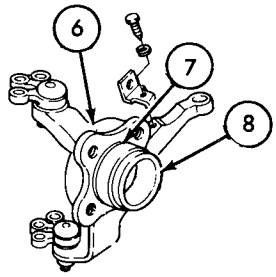

WHEEL SPINDLE SUPPORT

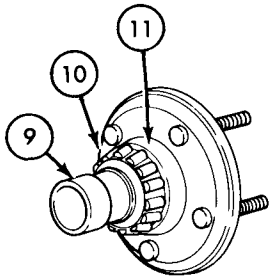

SPINDLE

TA 156122

CHAPTER 10

REAR SUSPENSION MAINTENANCE

10-1. Overview

a. This chapter provides maintenance and repair information for the rear suspension components authorized for direct and general support levels. Each component and related information is covered in one of the following sections:

b. Section III is preceded by a list that provides a breakdown of the procedures covered in that section and also provides a paragraph and page number leading you to each task.

Section I. DESCRIPTION AND DATA

10-2. General

This section provides description and data for the rear suspension components.

10-3. Description

The rear suspension is an individual wheel swing arm type with single trailing arms using coil springs and double action hydraulic shock absorbers for ride control. The coil springs are mounted between a spring seat in the suspension arm, and a formed pocket in the under body construction. The shock absorbers control jounce and rebound along with a rubber bumper stop located on top of each suspension arm.

10-4. Tabulated Data

Tabulated data for rear suspension components is found in table 10-1 below:

Table 10-1. Tabulated Data-Rear Suspension

Make	US Army design
Type	Stamped and welded
Type of Action	Trailing
Spring type	Coil
Shock absorber type	Hydraulic telescope
Characteristics	Rebound solid stop
Action	Two-way direct
Shock absorber bore size	1.37 in. (34.8 mm)

Section II. GENERAL INSPECTION, CLEANING, AND REPAIR INSTRUCTIONS

10-5. General

When an assembly or component is contaminated by dirt or other abrasive matter excessive wear may result. Contamination masks undetectable cracks that may hinder safe operation of components. The following procedure outlines proper cleaning and inspection practices for rear suspension components.

10-6. General Cleaning Instructions

WARNING

Drycleaning solvent is flammable and will not be used near an open flame. A fire extinguisher will be kept nearby when solvent is used. Use only in well-ventilated places. Failure to do this may result in injury to personnel and/or damage to equipment.

a. All metal rear suspension components should be throughly cleaned with drycleaning solvent.

b. If parts are being steam cleaned, do not use caustic soda in steam cleaners.

WARNING

Compressed air source will not exceed 30 psi. When cleaning with compressed air, eyeshields must be worn. Failure to wear eyeshields may result in injury to the eyes and loss of sight.

c. Dry parts with compressed air.

d. Components that have been steam cleaned will be oiled immediately to prevent surface oxidation. Suitable eye protection must be used during all cleaning procedures.

10-7. General Inspection and Repair Instructions Task Summary

TASK PARA	PROCEDURES	PAGE NO.
10-8.	Inspection and Repair of Rear Suspension Components Inspection and Repair	10-3

10-8. Inspection and Repair of Rear Suspension Components

This task covers:

Inspection and Repair

INITIAL SETUP:

Applicable Models
All

Equipment Condition Reference
TM 9-2320-218-20-1-2

Condition Description
Rear suspension components removed.

Test Equipment
None

Special Tools
None

Materials/Parts
Crocus cloth

Personnel Required
One mechanic

Manual References
TM 9-2320-218-20-1-2
TM 9-2320-218-34P

Special Environmental Conditions
None

General Safety Instructions
None

STEP NO.	LOCATION	ITEM	ACTION	REMARKS
INSPECTION AND REPAIR				
1.		Cast and machined components	*a.* Inspect for grooves, nicks, burrs,scratches, and wear.	Repair minor grooves, nicks, burrs, and scratches with crocus cloth and fine file. Replace if deeply grooved, scratched, or worn (see table 10-2 for wear limits).
			b. Inspect for cracks and breaks.	Replace if cracked or broken.
			c. Inspect damaged threaded surfaces.	Repair damaged threads with correct tap or die. If threaded surface cannot be repaired, replace component.

10-8. Inspection and Repair of Rear Suspension Components (Cont'd)

STEP NO.	LOCATION	ITEM	ACTION	REMARKS
2.		Thrust washers	Inspect for distortion, burrs, scratches, and wear.	If badly scratched, worn, or distorted, replace. Remove burrs with crocus cloth.
3.		Seals, bushings, and mating surfaces	*a.* Inspect for scoring, cuts, and hardness.	Replace if components are scored, cut or hard.
			b. Inspect mating surfaces for wear, scratches, and nicks.	Repair minor scratches and nicks with crocus cloth. If deeply scratched or nicked, replace both seal and mating surface. Replace if worn (see table 10-2 for wear limits).
4.		Splined components	Inspect for stripped, chipped, burred, and twisted areas.	Repair minor chips and burrs with soft stone or crocus cloth. If badly stripped, chipped, burred, or twisted, replace.
5.		Threaded parts	Inspect for damaged threads.	Use a thread file,tap, or die to restore threads. If threads cannot be repaired, replace component.
6.		Springs	Inspect for weak, distorted, and broken coils.	If coils are weak, distorted, or broken, replace (see table 10-2 for wear limits).

END OF TASK!

FOLLOW-ON TASK: Install rear suspension components (TM 9-2320-218-20-1-2).

Section III. REAR SUSPENSION MAINTENANCE

10-9. General

This section provides maintenance procedures assigned to direct and general support levels for the rear suspension system. To find a specific task, see the rear suspension maintenance task summary below:

10-10. Rear Suspension Maintenance Task Summary

TASK PARA	PROCEDURES	PAGE NO.
10-11.	Rear Suspension Arm Resilient Mount Replacement a. Removal b. Cleaning, Inspection, and Repair c. Installation	10-6

10-11. Rear Suspension Arm Resilient Mount Replacement

This task covers:

a. Removal
b. Cleaning, Inspection, and Repair
c. Installation

INITIAL SETUP:

Applicable Models	Equipment Condition Reference	Condition Description
All	TM 9-2320-218-20-1-2	Rear suspension arm removed.

Test Equipment
None

Special Tools
Arbor press
Bushing driver

Special Environmental Conditions
None

Materials/Parts
Rear suspension arm resilient mounts
GAA grease

Personnel Required
One mechanic

General Safety Instructions
Wear eye protection during pressing operations.

Manual References
TM 9-2320-218-20-1-2
TM 9-2320-218-34P

STEP NO.	LOCATION	ITEM	ACTION	REMARKS

NOTE

When replacing a resilient mount, replace both on the same suspension arm.

a. REMOVAL

WARNING

Wear eye protection during pressing operations. Failure to do so may result in eye injury and loss of sight.

10-11. Rear Suspension Arm Resilient Mount Replacement (Cont'd)

STEP NO.	LOCATION	ITEM	ACTION	REMARKS
		CAUTION Use care not to damage resilient mount bore during pressing operation.		
		NOTE Rear suspension arm resilient mounts are flanged and must be pressed outward from suspension arm.		
1.	Rear suspension arm (2)	Two resilient mounts (1)	Remove outward.	Use arbor press and bushing driver.

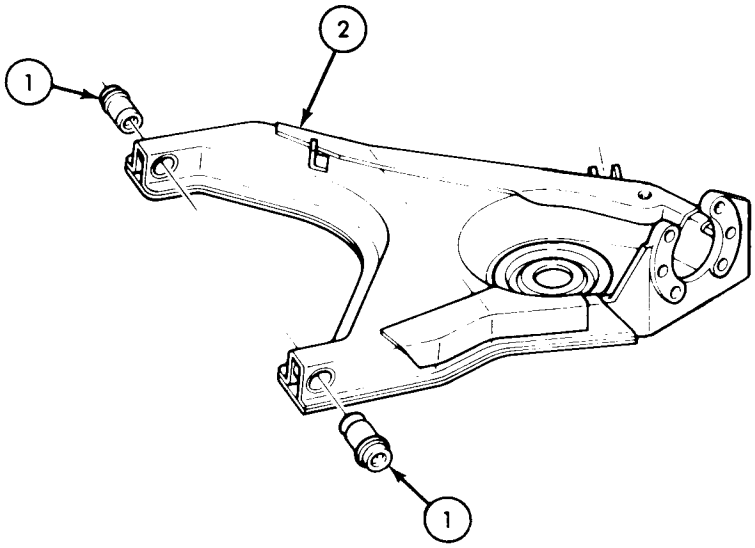

TA 156075

10-11. Rear Suspension Arm Resilient Mount Replacement (Cont'd)

STEP NO.	LOCATION	ITEM	ACTION	REMARKS
b. CLEANING, INSPECTION, AND REPAIR				
		NOTE • General cleaning instructions can be found in paragraph 10-6. • General inspection and repair instructions can be found in paragraph 10-8.		
c. INSTALLATION				
2.		Two resilient mounts (1)	*a.* Apply thin film of GAA grease to outer case.	
			b. Press into suspension arm (2) from outside toward inside until 5/32 in. (3.97 mm) exists between bushing flange (3) and arm (2).	Use arbor press. Distance between two bushing flanges should be 16-7/8 in. (428.62 mm) when installed.

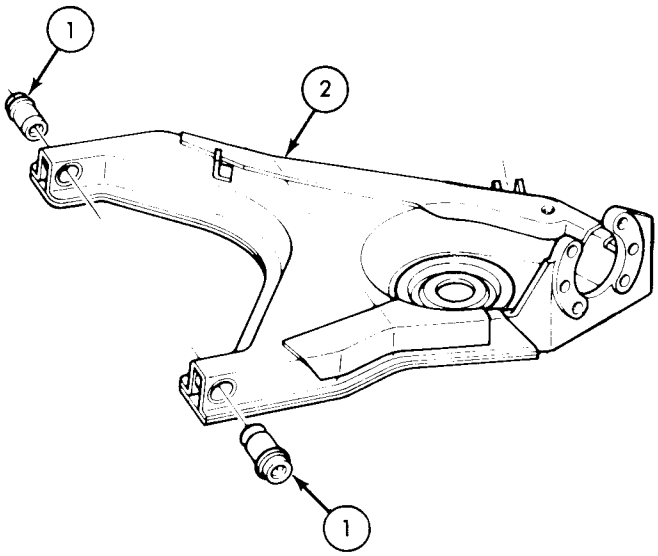

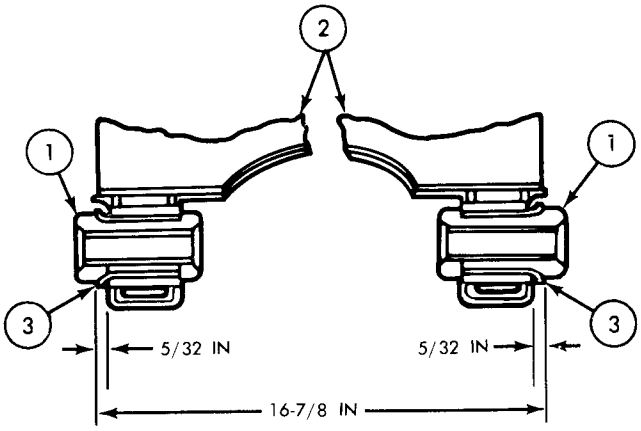

END OF TASK!

FOLLOW-ON TASK: Install rear suspension arm (TM 9-2320-218-20-1-2).

TA 156076

Section IV. REPAIR AND REPLACEMENT STANDARDS

10-12. General

This section provides repair and replacement standards pertaining to direct and general support for the rear suspension. The repair and replacement standards included herein give minimum, maximum, and key clearance of new or repaired parts. An asterisk (*) in the "wear limit" column indicates that a part should be replaced when worn beyond dimensions given in "size and fit of new parts" column. In "size and fit of new parts" column, the letter "L" indicates a loose fit (clearance) the letter "T" indicates a tight fit (clearance).

10-13. Repair and Replacement Standards — Rear Suspension

The components covered by the repair and replacement standard listed in table 10-2 are illustrated below. To find the component and its tolerance requirements, match the reference number listed to the extreme left in table 10-2 below:

Table 10-2. Repair and Replacement Standards — Rear Suspension

Ref. No.	Point of Measurement	Size and Fit of New Parts	Wear Limits
1.	Spring compressed length	9.70±.01 in. at 1115±35 lb. load. (24.64 cm± .25 mm at 507 kg ±15.9 kg load).	*
2.	Outside diameter of seal seat	2.2475 to 2.2525 in. (57.087-57.214 mm)	*
3.	Outside diameter of bearing seat	1.1390 to 1.3195 in. (33.503-33.515 mm)	*
4.	Inside diameter of bearing cone	1.6250 to 1.6255 in. (41.275-41.288 mm)	*
5.	Outside diameter of bearing cup	2.8910 to 2.8920 in. (73.431-73.457 mm)	*

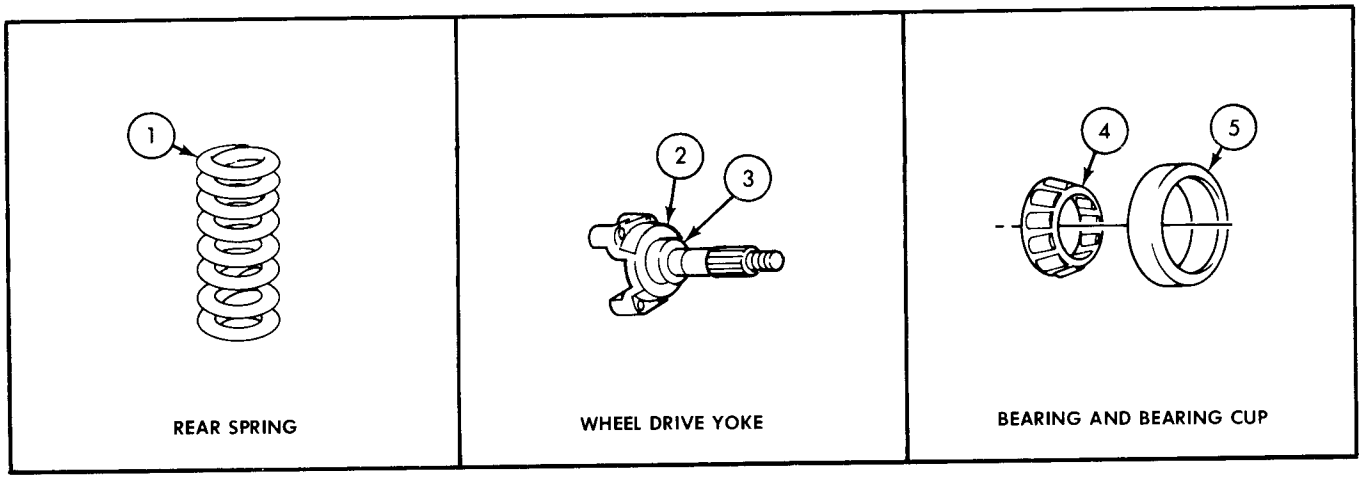

TA 156077

Table 10-2. Repair and Replacement Standards — Rear Suspension (Cont'd)

Ref. No.	Point of Measurement	Size and Fit of New Parts	Wear Limits
6.	Inside diameter of inner-seal seat	2.9930 to 2.9975 in. (76.022-76.137 mm)	*
7.	Outside diameter of outer-seal seat	3.2585 to 3.2630 in. (82.766-82.888 mm)	*
8.	Inside diameter of bearing bore	2.8895 to 2.8905 in. (73.393-73.418 mm)	*
9.	Bearing seat (inner bearing)	1.6245 to 1.6250 in. (41.262-41.275 mm)	*
10.	Bearing seat (outer bearing)	1.6260 to 1.6265 in. (41.300-41.313 mm)	*
11.	Outside diameter of seal seat	2.7475 to 2.7525 in. (69.787-69.914 mm)	*

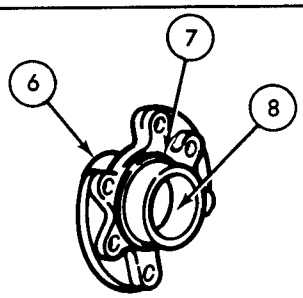

SPINDLE SUPPORT

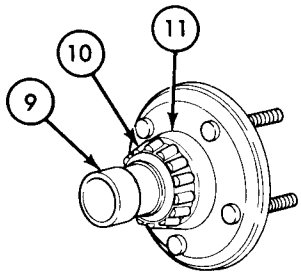

SPINDLE AND BEARING

TA 156078

CHAPTER 11

DIFFERENTIAL ASSEMBLY MAINTENANCE

11-1. Overview

a. This chapter provides maintenance instruction and information about wear, fit, adjustment, and replacement parts. The differential, differential assemblies and related information is covered in the following sections:

b. Section II is preceded by a list that provides a breakdown of the procedures covered in that section and also provides a paragraph and page number leading you to each task.

Section I. DESCRIPTION AND DATA

11-2. General

This section provides description and data for the ordnance design drive-through differential assembly.

11-3. Description-Differential

The differential assembly is a drive-through, four-pinion type. Front and rear assemblies are interchangeable. The differential assembly is shown on page 11-2.

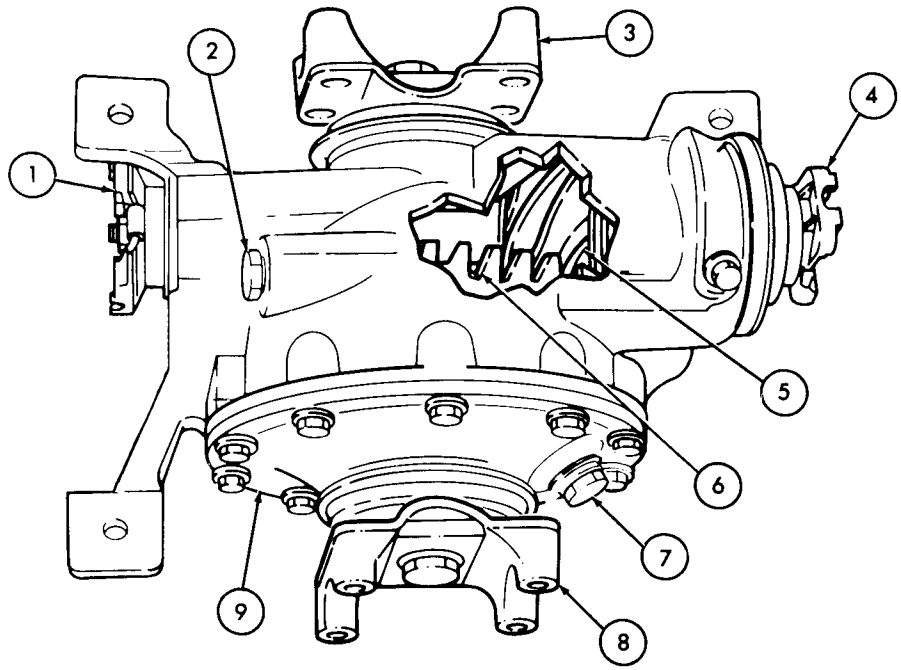

1. Rear pinion flange
2. Drain plug
3. Right side gear flange
4. Front pinion flange
5. Pinion gear
6. Ring gear
7. Lubrication filler plug
8. Left side gear flange
9. Differential housing cover

11-4. Tabulated Data

Tabulated data for the differential is in table 11-1.

Table 11-1. Tabulated Data — Differential

Make	ordnance design
Type	drive-through
Mounting Method	3 point
Lubricant Capacity	2 pt (0.95 l)
Gear Type	hypoid
Drive Gear Ratio	4.86:1
Hypoid Ring Gear Size	7 in. (177.8 mm)
Hypoid Pinion Offset	1.625 in. (41.3 mm)
Differential Type	4 pinion

TA 156001

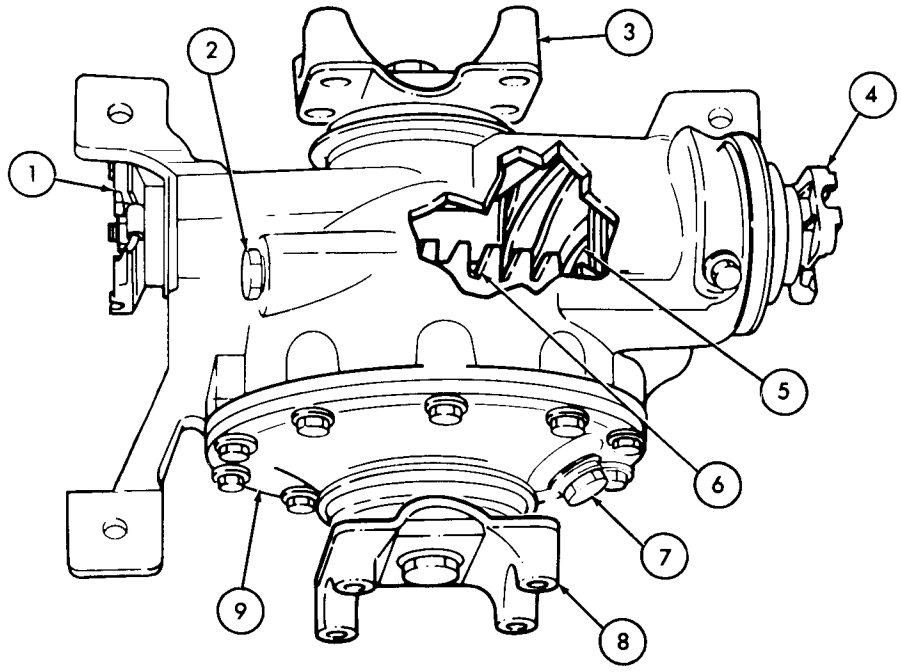

1. Rear pinion flange
2. Drain plug
3. Right side gear flange
4. Front pinion flange
5. Pinion gear
6. Ring gear
7. Lubrication filler plug
8. Left side gear flange
9. Differential housing cover

11-4. Tabulated Data

Tabulated data for the differential is in table 11-1.

Table 11-1. Tabulated Data — Differential

Make	ordnance design
Type	drive-through
Mounting Method	3 point
Lubricant Capacity	2 pt (0.95 l)
Gear Type	hypoid
Drive Gear Ratio	4.86:1
Hypoid Ring Gear Size	7 in. (177.8 mm)
Hypoid Pinion Offset	1.625 in. (41.3 mm)
Differential Type	4 pinion

TA 156001

Section II. DIFFERENTIAL ASSEMBLY MAINTENANCE

11-5. General

This section provides maintenance assigned to the direct and general support levels for the differential assembly and components. To find a specific procedure, see the maintenance task summary below:

11-6. Differential Assembly Maintenance Task Summary

11-7. Differential on Stand

This task covers:

a. Mounting *b. Dismounting*

INITIAL SETUP:

Applicable Models	Equipment Condition Reference	Condition Description
All	TM 9-2320-218-20-1-2	Differential removed from vehicle.

Test Equipment

None

Special Tools

Engine stand
Improvised differential
Holding fixture (see appendix D)

Special Environmental Conditions

None

Materials/Parts

None

Personnel Required

One mechanic
One assistant

General Safety Instructions

None

Manual References

TM 9-2320-218-20-1-2

STEP NO.	LOCATION	ITEM	ACTION	REMARKS
a. MOUNTING				
1.	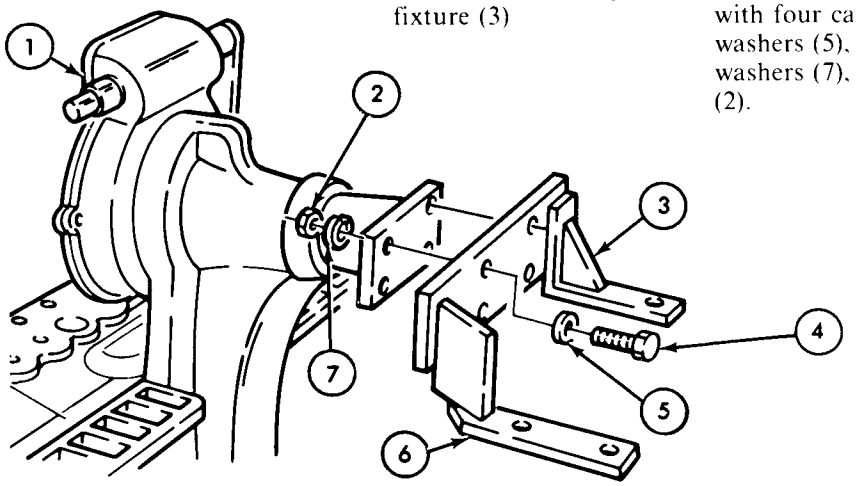	Differential holding fixture (3)	Secure to stand (1) with four capscrews (4), washers (5), lockwashers (7), and nuts (2).	Long arm of holding fixture (6) should be on left when facing fixture (3) mounted to stand (1).

TA 156002

11-7. Differential on Stand (Cont'd)

STEP NO.	LOCATION	ITEM	ACTION	REMARKS
		NOTE		
		Assistant will hold differential while mechanic secures to holding fixture.		
2.		Differential housing assembly (8)	Secure to holding fixture (3) and stand (1) with three capscrews (9), washers (10), and nuts (11).	
b. DISMOUNTING				
3.	Stand (1)	Differential assembly (8)	Rotate.	Put longer arm (6) of holding fixture (3) on left when facing fixture (3) mounted to stand (1).

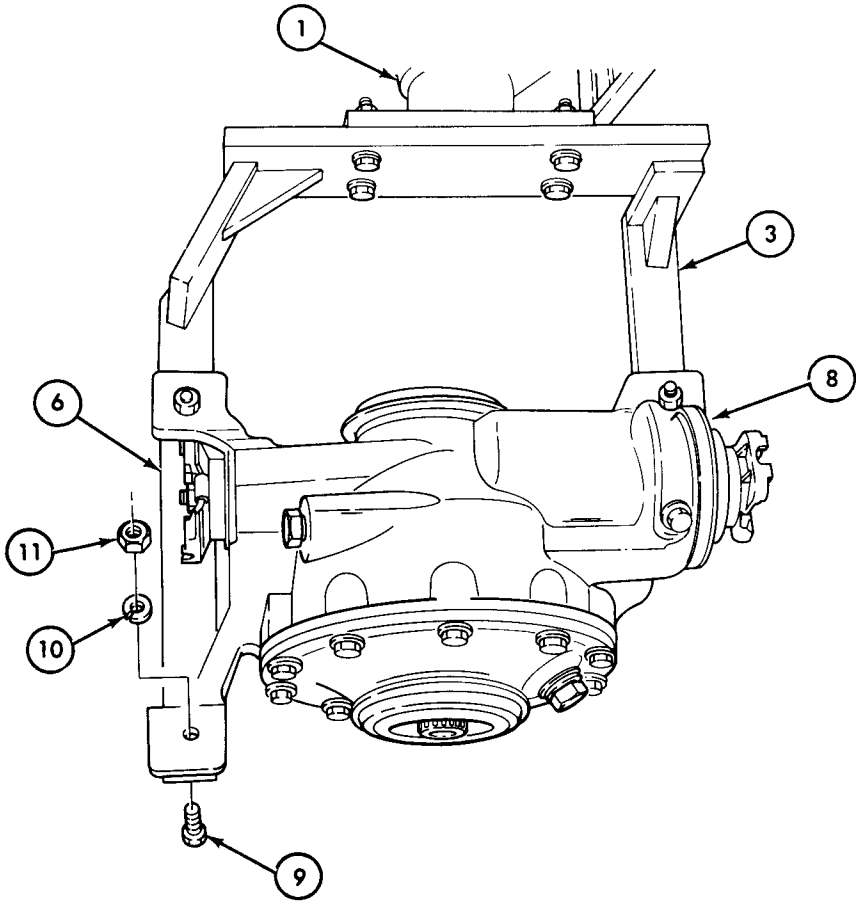

TA 156003

11-7. Differential on Stand (Cont'd)

STEP NO.	LOCATION	ITEM	ACTION	REMARKS
		NOTE Assistant will hold differential while mechanic removes capscrews from fixture.		
4.	Differential assembly (2) to holding fixture (1)	Three nuts (5), washers (4), and capscrews (3)	Remove.	
5.		Differential assembly (2)	Remove from holding fixture (1).	
6.	Holding fixture (1) to stand (10)	Four nuts (9), lockwashers (8), flat washers (7), and capscrews (6)	Remove.	
7.		Holding fixture (1)	Remove from stand (10).	

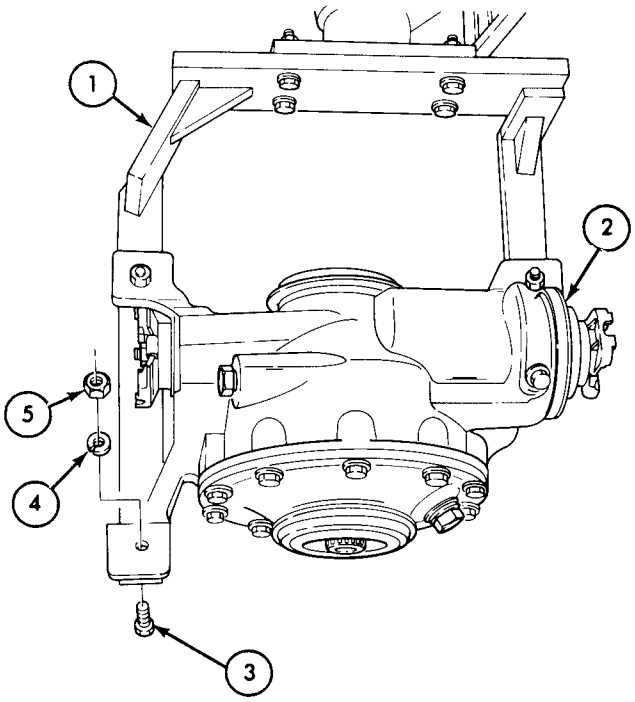

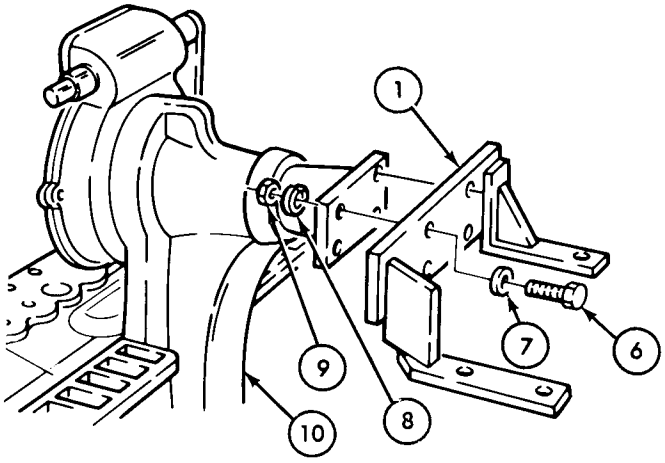

END OF TASK!

TA 156004

11-8. Differential Housing Maintenance

This task covers:

a. Disassembly
b. Cleaning, Inspection, and Repair
c. Reassembly

INITIAL SETUP:

Applicable Models	Equipment Condition Reference	Condition Description
All	Para 11-7	Differential assembly mounted on stand.

Test Equipment

None

Special Tools

Safety goggles
Adapter replacer tool
Spanner wrench
Seal driver
Flange holding tool
Slide hammer
Arbor press
Wedge assembly

Special Environmental Conditions

Clean, well-ventilated work area.

Materials/Part

Housing cover gasket
White lead (NSN 8010-00-239-5737)
GAA grease
Two dowel pins
Two side gear flange lockwashers
Two side gear flange seals
Ten housing cover lockwashers
OE/HDO oil
Two key washers
Sleeve and seal kit #5704848
Drycleaning solvent
Compound sealer

Personnel Required

One mechanic

General Safety Instructions

- Always wear safety goggles when using compressed air.
- Keep fire extinguisher nearby when using drycleaning solvent.

Manual References

TM 9-2320-218-20-1-2
TM 9-2320-218-34P
LO 9-2320-218-12
TM 9-214

STEP NO.	LOCATION	ITEM	ACTION	REMARKS

NOTE

Prior to disassembly, check and record backlash. This backlash must be reset if the used drive gears are reassembled into the original differential. (See para 11-11).

11-8. Differential Housing Maintenance (Cont'd)

STEP NO.	LOCATION	ITEM	ACTION	REMARKS
a. DISASSEMBLY				
1.	Left and right side gear flanges (3) to differential housing (1)	Two capscrews (5) and lockwashers (4)	Remove.	Use flange holding tool to prevent rotation. Discard lockwashers (4).
2.		Two side gear flanges (3)	Remove from differential housing (1).	Use pry bar.
3.	Differential housing (1)	Two side gear flange seals (2)	Remove.	Use pry bar. Discard seals (2).

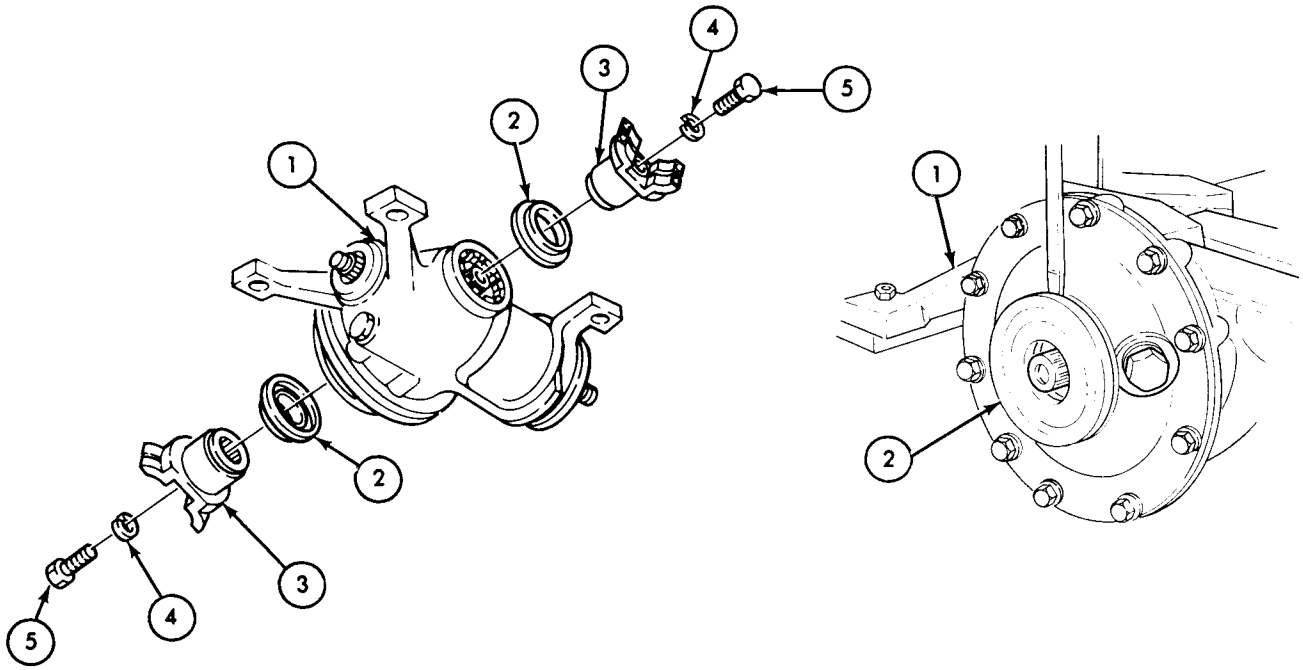

4.	Side gear bearing adjusting nuts (10) to differential housing (1)	Two locks (9)	Remove.	
5.	Differential housing (1)	Two side gear bearing adjusting nuts (10)	Loosen, but do not remove.	Use spanner wrench.

TA 156005

11-8. Differential Housing Maintenance (Cont'd)

STEP NO.	LOCATION	ITEM	ACTION	REMARKS
6.	Housing cover (6) to differential housing (1)	Ten capscrews (8) and lockwashers (7)	Remove.	Discard lockwashers (7).
7.		Housing cover (6), and gasket (12)	Remove from differential housing (1).	Use hammer and flat edged tool. Discard gasket (12).
8.	Differential housing (1)	Differential case assembly (14)	Remove.	
9.	Differential housing (1) and housing cover (6)	Two side gear bearing adjusting nuts (10)	Remove.	
10.	Differential housing (1) and housing cover (6)	Two differential case bearing cups (11)	Remove.	
11.	Differential housing (1)	Two dowel pins (13)	Remove.	Use vise grip pliers. Do not damage housing cover mating surface (15). Discard dowel pins (13).

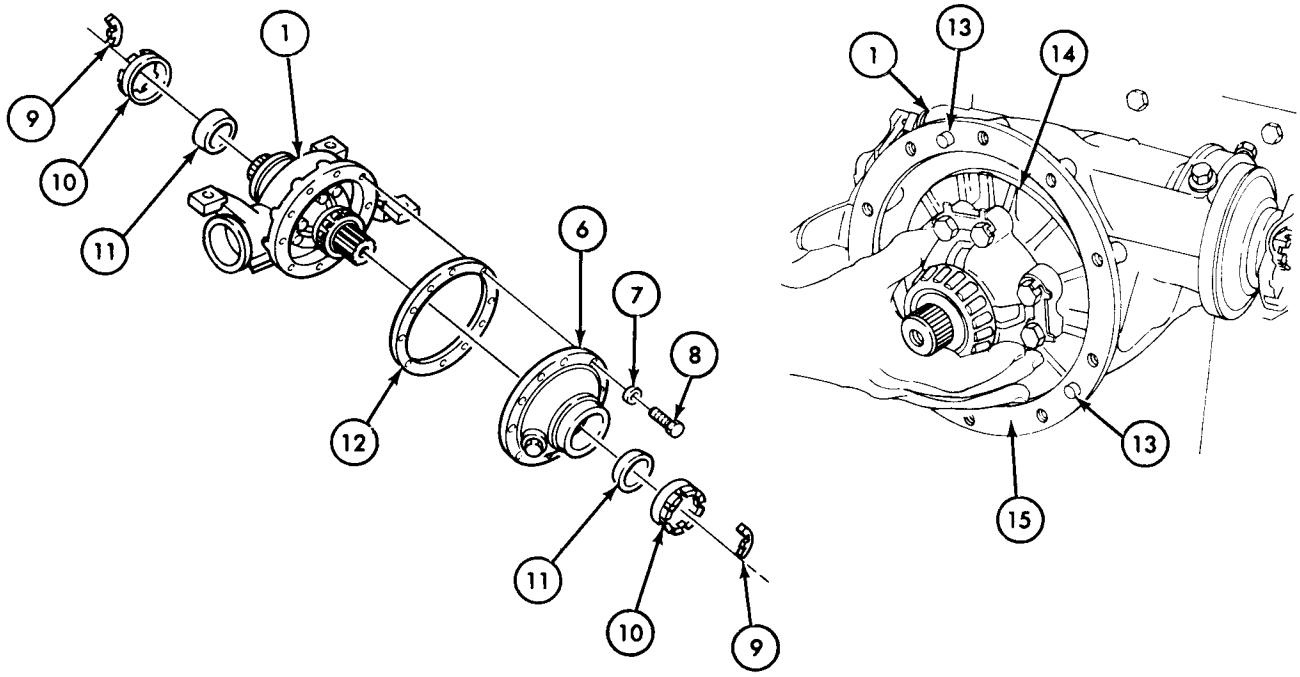

TA 156006

11-8. Differential Housing Maintenance (Cont'd)

STEP NO.	LOCATION	ITEM	ACTION	REMARKS
12.	Two pinion flanges (4)	Two key washers (1)	Bend ends back and remove.	Discard key washers (1).
13.	Two pinion flanges (4) to pinion shaft (5)	Two nuts (2) and washers (3)	Remove.	
14.		Two pinion flanges (4)	Remove from pinion shaft (5).	
15.	Differential housing (6)	Front pinion shaft bearing seal (7)	Remove.	Use pry bar. Discard seal (7).

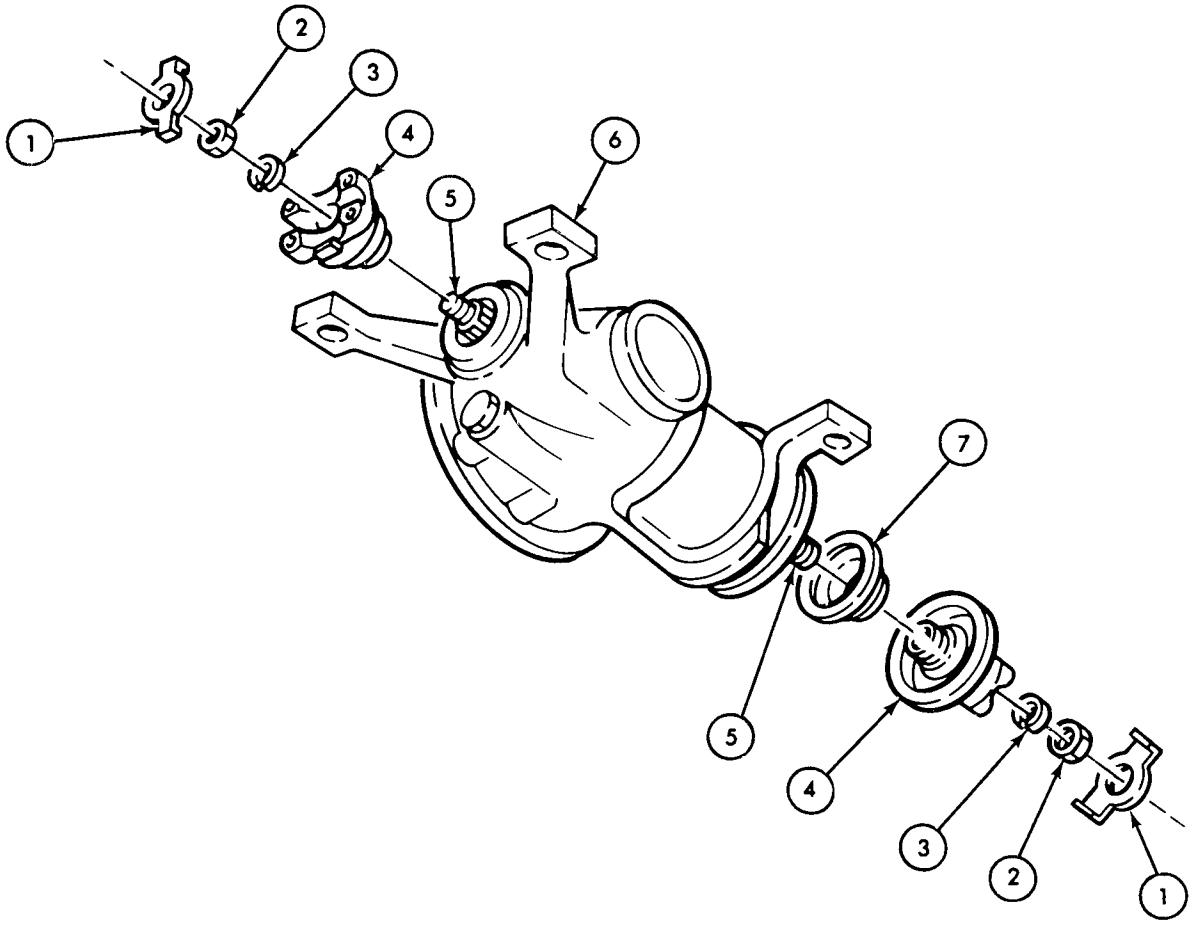

TA 156007

11-8. Differential Housing Maintenance (Cont'd)

STEP NO.	LOCATION	ITEM	ACTION	REMARKS
		CAUTION Use care not to damage flanges when placing in vise and when removing wear sleeves.		
16.		Two side gear (8) and two pinion flanges (4)	Secure in bench vise.	
17.	Two side gear (8) and and two pinion flanges (4)	Wear sleeve (9)	Split open and remove from each.	Use sharp chisel and hammer. Discard wear sleeve (9).

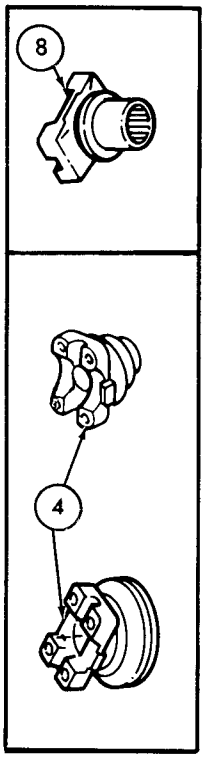

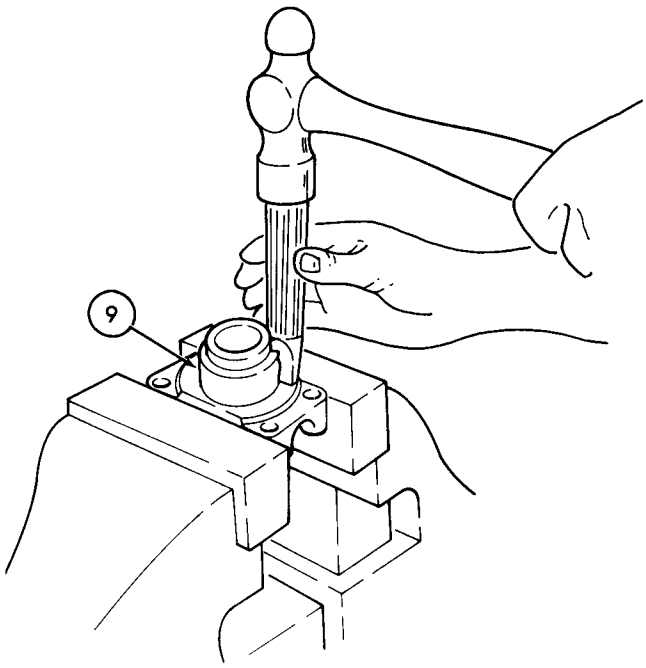

TA 156008

11-8. Differential Housing Maintenance (Cont'd)

STEP NO.	LOCATION	ITEM	ACTION	REMARKS
18.	Pinion bearing adjusting nut (2) to front differential housing (3)	Lock (1)	Remove.	
19.		Pinion bearing adjusting nut (2)	Remove from differential housing (3).	Use spanner wrench.
20.	Front differential housing (3)	Pinion shaft assembly (4) and shim (7)	Remove.	Use arbor press (5) and adapter (6).

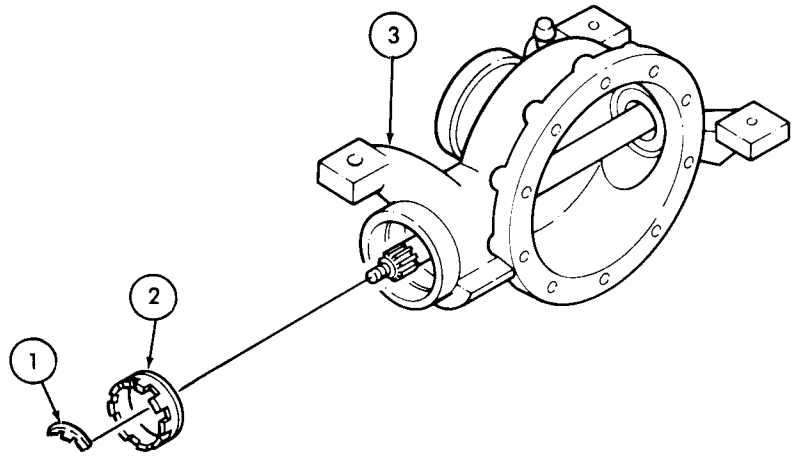

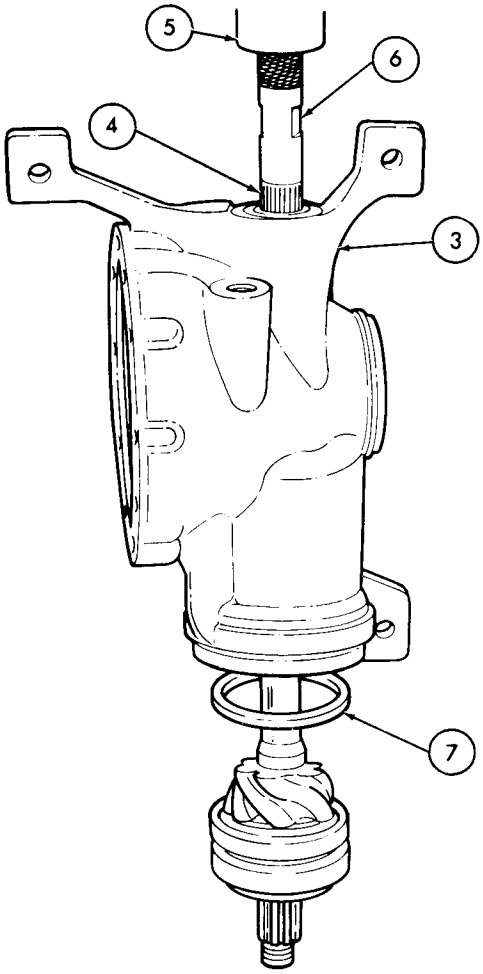

21.	Pinion shaft assembly (4)	Outer front bearing (9), inner front bearing (12), bearing cup (10), and spacer (11)	Remove.	Use adapter (6), wedge assembly (8), and arbor press (5). Tag outer bearing (9) for proper reassembly.

TA 156009

11-8. Differential Housing Maintenance (Cont'd)

STEP NO.	LOCATION	ITEM	ACTION	REMARKS

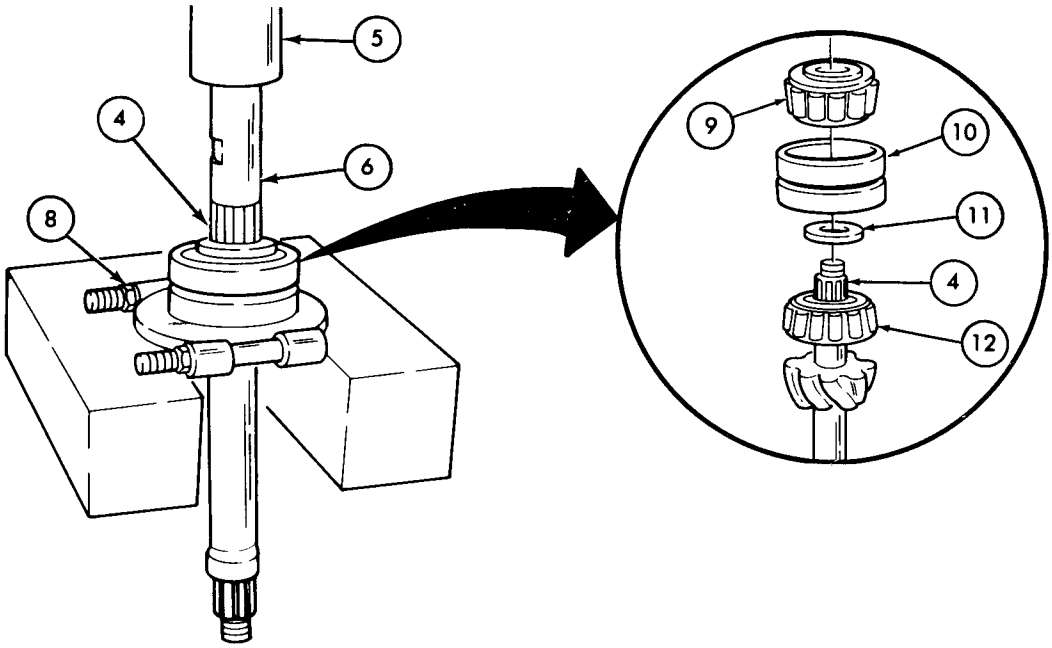

22.	Rear differential housing (3)	Pinion shaft rear bearing (13), spacer (14), and seal (15)	Remove.	Use adapter and slide hammer. Discard seal (15).

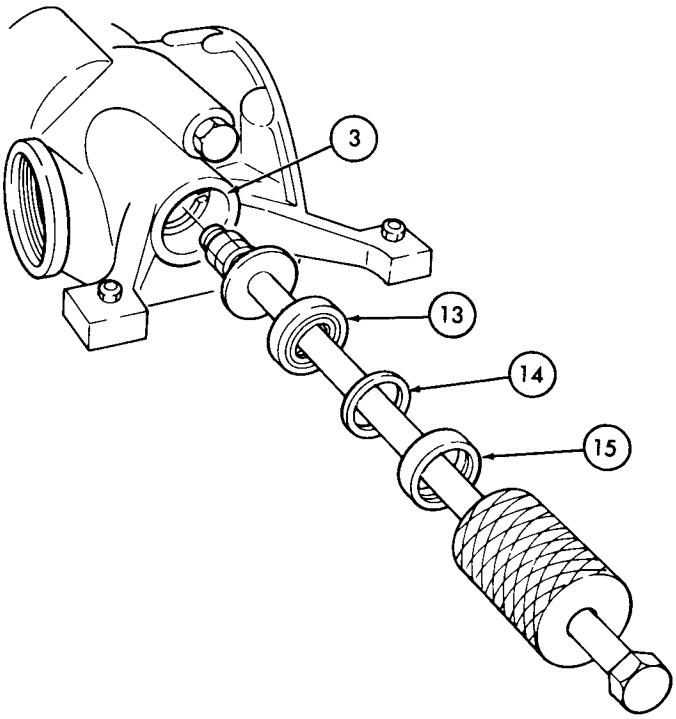

TA 156010

11-8. Differential Housing Maintenance (Cont'd)

STEP NO.	LOCATION	ITEM	ACTION	REMARKS

NOTE

- Tag differential housing and cover as a matched set.
- Tag ring gear, pinion shaft, and shims as a matched set.
- If complete disassembly is required, perform case assembly maintenance (para 11-9).

b. CLEANING, INSPECTION, AND REPAIR

WARNING

- Drycleaning solvent is flammable and will not be used near an open flame. A fire extinguisher will be kept nearby when the solvent is used. Use only in well-ventilated places. Failure to do this may result in injury to personnel and/or damage to equipment.
- Compressed air source will not exceed 30 psi. When cleaning with compressed air, eyeshields must be worn. Failure to wear eyeshields may result in injury to the eyes and loss of sight.

CAUTION

Do not use compressed air on bearings. Dry spinning bearings can cause scoring.

11-8. Differential Housing Maintenance (Cont'd)

STEP NO.	LOCATION	ITEM	ACTION	REMARKS
23.		All metal parts except bearings	*a.* Place parts in dry-cleaning solvent and agitate.	Be sure oil passages are clean.
			b. Dry with compressed air.	See TM 9-214 for care and maintenance of bearings.
24.		Cast parts and machined surfaces	Inspect for wear, burrs, grooves, scratches, cracks, chips, and breaks.	Remove small scratches and burrs with a crocus cloth. Replace if cracked, chipped, broken, worn, or severely scratched. (See table 11-3 for wear limits.)
		NOTE Bearings are assembled with a slip fit to permit adjustment. Indication of turning will be noted, but no wear should be evident.		
25.		Bearings (1)	Inspect for score marks, pits, chips, and wear.	Replace if score marked, pitted, chipped, or worn. (See table 11-3 for wear limits.)
26.		Thrust washers (2)	Inspect for distortion, score marks, burrs, and wear.	Replace if distorted, score marked, worn, or burrs evident. (See table 11-3 for wear limits.)
27.		Pinion shaft gear (3)	Inspect for scuffs, nicks, burrs, broken teeth, and wear.	Remove burrs, small scuffs, and nicks with soft stone. Replace if broken or worn. (See table 11-3 for wear limits.)
28.		Splined parts (4)	Inspect for burrs, nicks, chips, breaks, and wear.	Remove burrs with a soft stone. Replace if nicked, chipped, broken, or worn. (See table 11-3 for wear limits.)

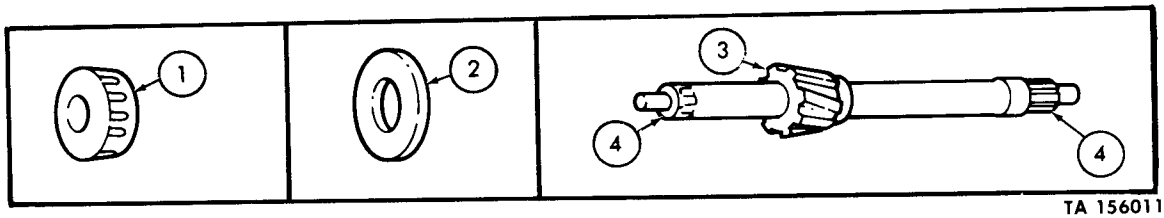

TA 156011

11-8. Differential Housing Maintenance (Cont'd)

STEP NO.	LOCATION	ITEM	ACTION	REMARKS
c. REASSEMBLY				
29.		Rear pinion shaft bearing (4)	*a.* Insert into differential housing bore (1).	Use replacer tool.
			b. Lubricate rollers with OE/HDO lubricant.	
30.		Rear pinion bearing spacer (2)	Insert into differential housing bore (1).	
31.		New rear pinion shaft bearing seal (3)	*a.* Lubricate lips with GAA grease.	
			b. Coat outside with compound sealer.	
			c. Install in housing bore (1).	Use seal driver and hammer.

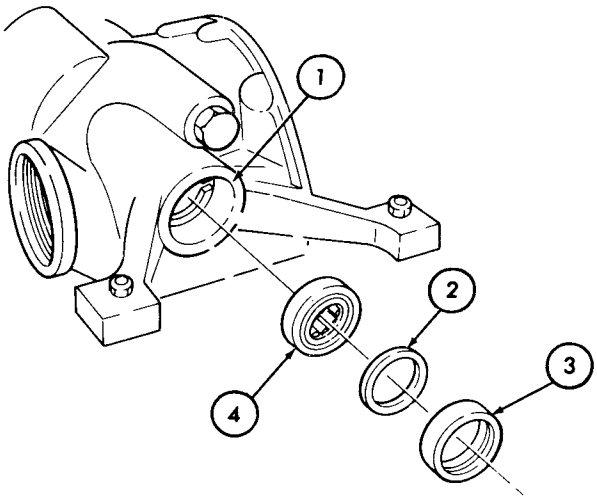

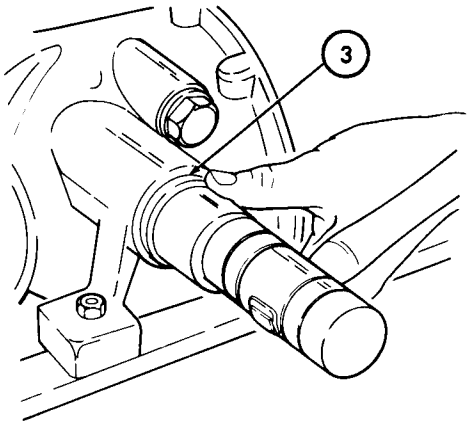

TA 156012

11-8. Differential Housing Maintenance (Cont'd)

STEP NO.	LOCATION	ITEM	ACTION	REMARKS
		NOTE		
		Perform ring and pinion gear preload tests (para 11-10) before proceeding to step 32.		
32.		Shim (6)	Install into front of differential housing (5).	Shim size is etched on pinion shaft. If not visible, use shim from old gear set.
33.		Pinion shaft assembly (7)	Press into front of differential housing (5).	Use arbor press (8) and spanner wrench (9).

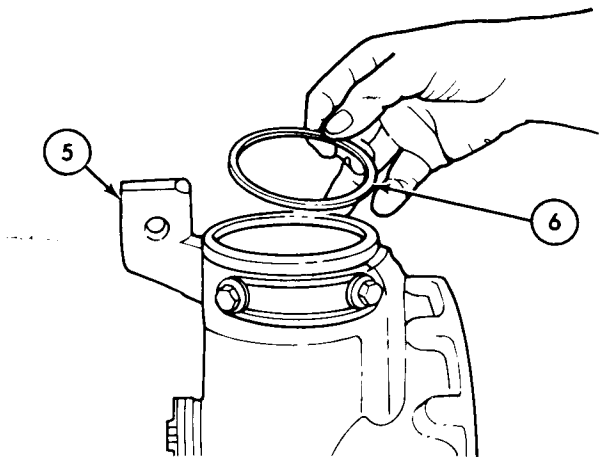

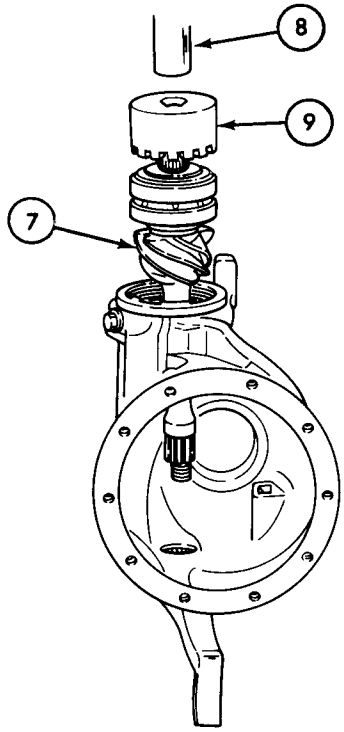

TA 156013

11-8. Differential Housing Maintenance (Cont'd)

STEP NO.	LOCATION	ITEM	ACTION	REMARKS
34.		Pinion bearing adjusting nut (1)	Secure to front of differential housing (2).	Use spanner wrench. Tighten 40-50 lb-ft (54-68 N•m).
35.		Four new wear sleeves (4)	*a.* Place one on each flange shaft (3).	
			b. Using block of wood and hammer, drive onto flange shaft (3) until it bottoms against base of shaft (3).	If a wear sleeve (4) does not bottom against base of flange shaft (3), position another wear sleeve against installed sleeve (4) and tap until it is bottomed on shaft (3).

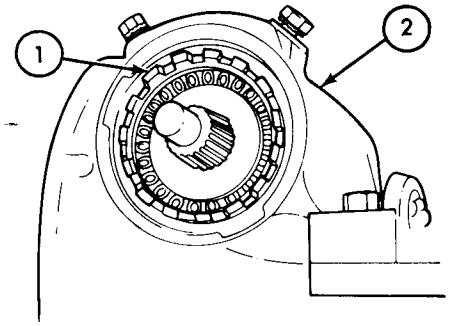

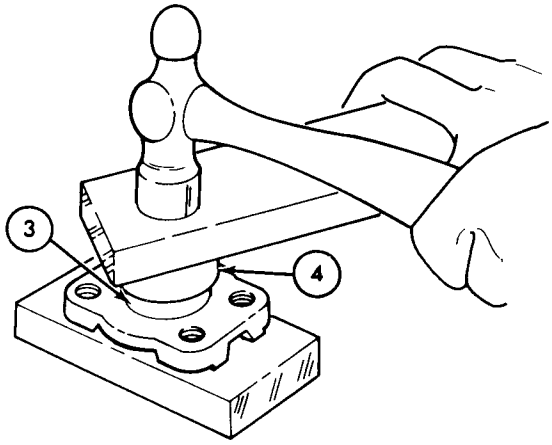

TA 156014

11-8. Differential Housing Maintenance (Cont'd)

STEP NO.	LOCATION	ITEM	ACTION	REMARKS
		CAUTION		
		Rotate bearings while securing pinion flanges to prevent binding and scoring.		
		NOTE		
		Left, right, and front seals are not installed until after backlash and mesh checks (para 11-11 and 11-12) are performed.		
36.		Front and rear pinion flanges (7) and (8)	Secure each to pinion shaft (9) with washer (6) and nut (5).	Tighten rear 35-45 lb-ft (47-61 N•m). Tighten front 60-70 lb-ft (81-95 N•m).
37.		Ring gear teeth (10)	Apply thin coat of white lead in oil.	Used for gear mesh check (para 11-12).
38.		Differential case assembly (11)	Place in differential housing (2).	

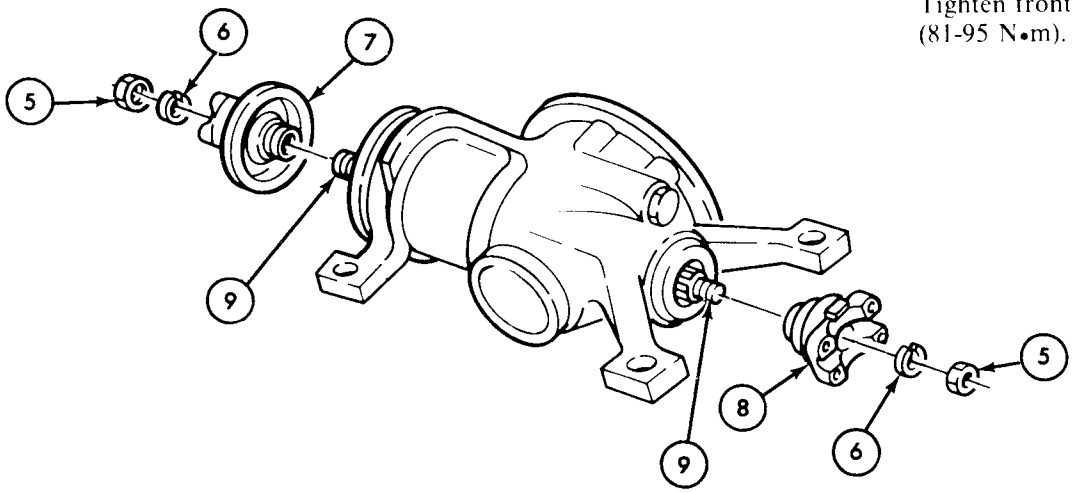

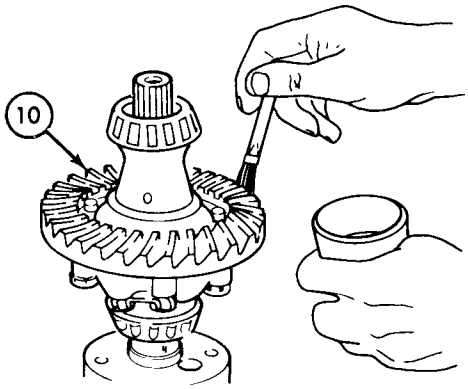

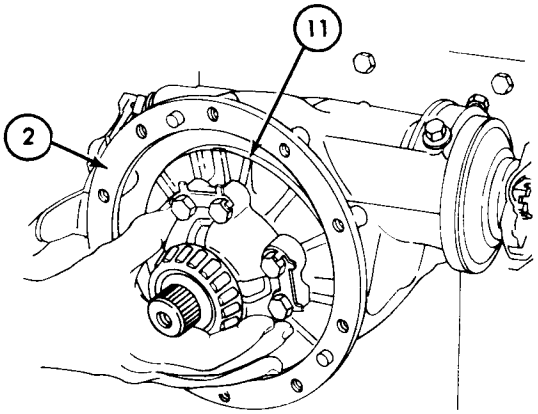

TA 156015

11-8. Differential Housing Maintenance (Cont'd)

STEP NO.	LOCATION	ITEM	ACTION	REMARKS
39.		Two new dowel pins (8)	Start into housing (2).	
40.		New gasket (3) and housing cover (4)	*a.* Position to housing (2).	
			b. Aline on dowel pins (8).	
41.		Left side bearing adjusting nut (9)	Loosen several turns from housing cover (4).	
42.		Two dowel pins (8)	Tap into housing (2) until flush with cover (4).	
43.		Gasket (3) and housing cover (4)	Secure to differential housing (2) with ten new lockwashers (5) and capscrews (6).	Tighten 25-30 lb-ft (34-41 N•m).
44.		Left side bearing adjusting nut (9)	*a.* Finger tighten.	
			b. Tighten to preload test reference notch.	Use spanner wrench.
		NOTE Perform backlash check and adjustment (para 11-11) and mesh check and adjustment (para 11-12) before proceeding to step 45.		
45.		Ring gear teeth (10)	Clean off all white lead and oil.	
46.		Case assembly (7)	Place in differential housing (2).	
		NOTE Note position of backlash test notch.		
47.		Left side bearing adjusting nut (9)	Loosen several turns from housing cover (4).	
48.		Gasket (3) and housing cover (4)	Secure with ten lock-washers (5) and capscrews (6).	Tighten 25-30 lb-ft (34-41 N•m).
49.		Left side bearing adjusting nut (9)	*a.* Finger tighten.	
			b. Tighten to back-lash test notch.	
50.		Two side bearing adjusting nut locks (1)	Install into differential housing (2).	Do not disturb bearing adjustment.

11-8. Differential Housing Maintenance (Cont'd)

STEP NO.	LOCATION	ITEM	ACTION	REMARKS

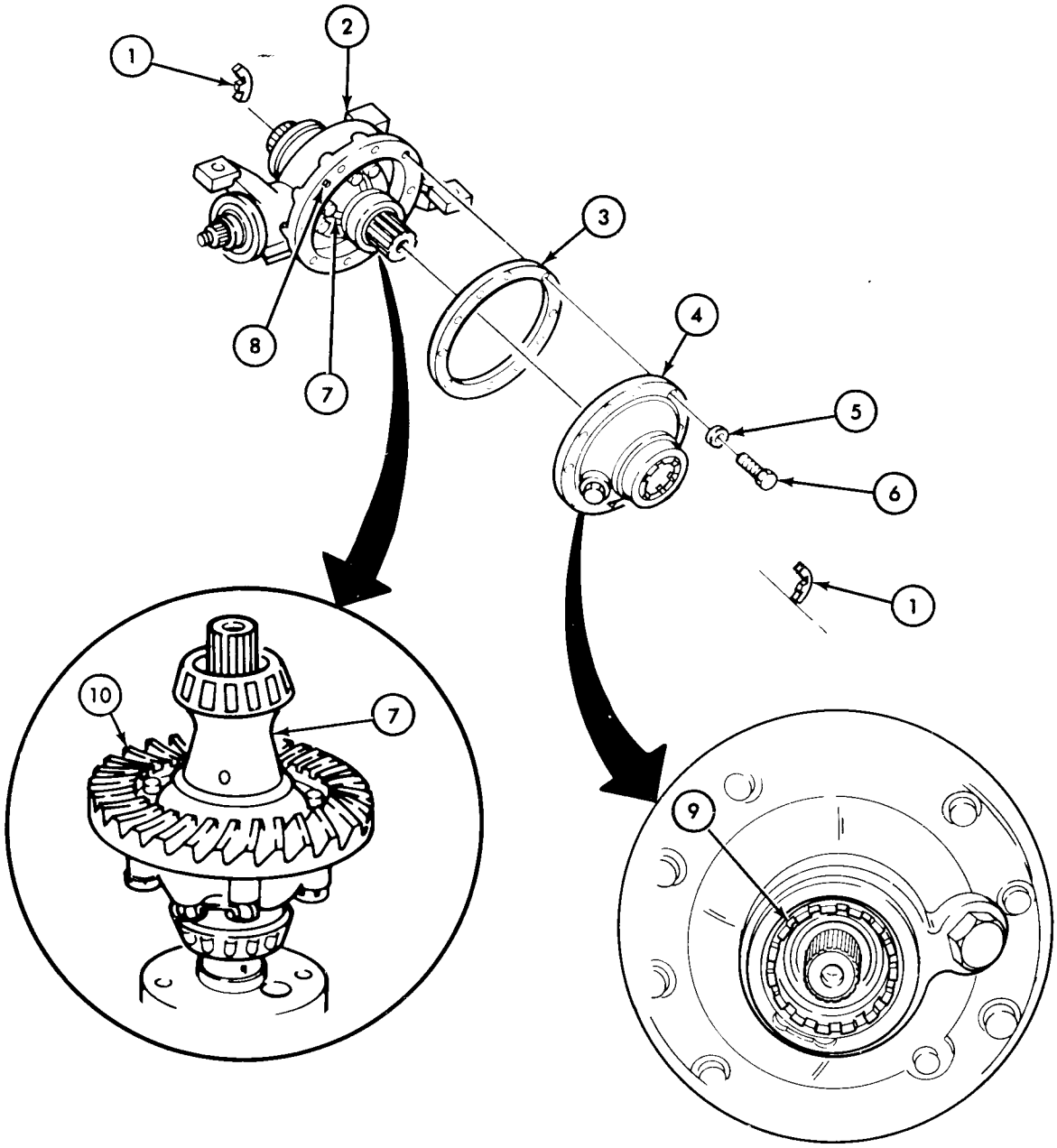

TA 156016

11-8. Differential Housing Maintenance (Cont'd)

STEP NO.	LOCATION	ITEM	ACTION	REMARKS
51.		Two new side gear flange seals (2)	*a.* Lubricate lips with GAA grease.	
			b. Coat seating surface with compound sealer.	
			c. Install into differential housing (1).	Use seal driver.
52.		Two side gear flanges (3)	Secure each to differential housing (1) with two new lockwashers (5) and capscrews (4).	Tighten 40-45 lb-ft (57-61 N•m).

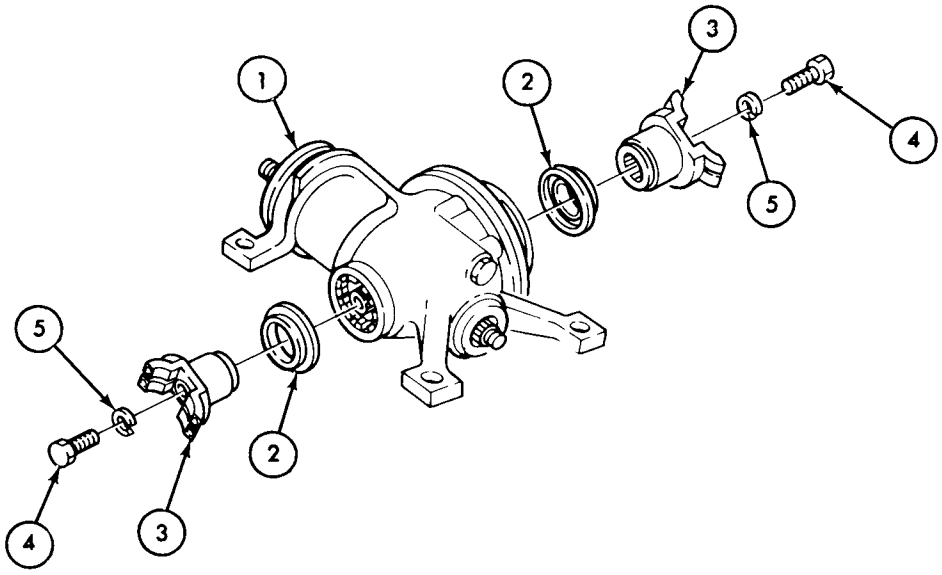

53.	Front pinion flange (9) to pinion shaft (16)	Washer (8) and nut (7)	Remove.	
54.		Front pinion flange (9)	Remove from pinion shaft (16).	
55.		Pinion bearing adjusting nut lock (11)	Install on pinion bearing adjusting nut (12).	

TA 156017

11-8. Differential Housing Maintenance (Cont'd)

STEP NO.	LOCATION	ITEM	ACTION	REMARKS
56.		New front pinion shaft bearing seal (10)	*a.* Lubricate with GAA grease.	
			b. Coat seating surface with compound sealer.	
			c. Install on pinion shaft (16).	Use pinion seal driver.
		NOTE Rotate bearings while securing pinion flange to prevent binding and scoring.		
57.		Front pinion flange (9)	Secure to pinion shaft with washer (8) and and nut (7).	Tighten 60-70 lb-ft (81-95 N•m).
58.		Two new keywashers (6)	Install on pinion shaft nuts (7) and bend tab ends (15) over flange (9).	
59.		Magnetic drain plug (13)	Install into differential housing (14).	Tighten 25-35 lb-ft (34-47 N•m).
60.		Differential assembly (14)	Fill with lubricant to proper level.	See LO 9-2320-218-12.

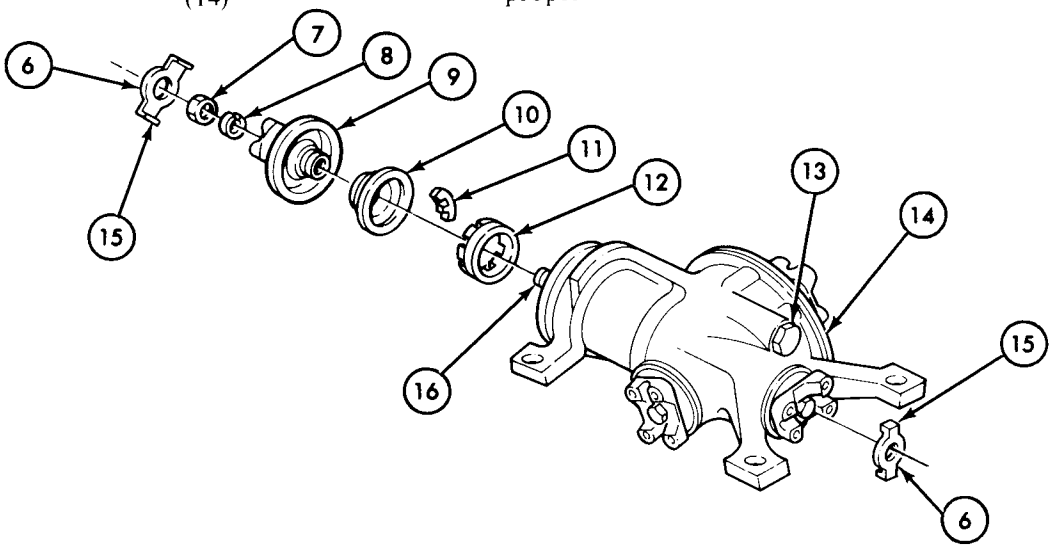

END OF TASK!

FOLLOW-ON TASKS:
- Dismount differential from stand (para 11-7).
- Install differential on vehicle (TM 9-2320-218-20-1-2).

TA 156018

11-9. Differential Case Assembly Maintenance

This task covers:

a. Disassembly
b. Cleaning, Inspection, and Repair
c. Reassembly

INITIAL SETUP:

Applicable Models	Equipment Condition Reference	Condition Description
All	Para 11-8	Differential housing disassembled.

Test Equipment

Micrometers

Special Tools

Side bearing puller
Spanner wrench
Driver
Arbor press
Flange holding tool
Safety goggles

Materials/Parts

Drycleaning solvent
OE/HDO Lubricant
Crocus cloth
Four locking plates

Personnel Required

One mechanic

Manual References

TM 9-2320-218-34P
TM 9-2320-218-12
TM 9-214

Special Environmental Conditions

Clean, well-ventilated work area.

General Safety Instructions

- Always wear safety goggles when using compressed air.
- Keep a fire extinguisher nearby when using drycleaning solvent.

STEP NO.	LOCATION	ITEM	ACTION	REMARKS
a. DISASSEMBLY				
1.		Differential case assembly (1)	Mount in soft-jawed vise (3).	
2.		Two side gear bearings (2)	Remove from differential case assembly (1).	Use puller. Tag bearings for proper reassembly.
3.	Differential case assembly (1)	Four locking plates (4)	Bend tabs back.	

11-9. Differential Case Assembly Maintenance (Cont'd)

STEP NO.	LOCATION	ITEM	ACTION	REMARKS
		NOTE		
		Scribe mark on long case section (8) and short case section (6) so they may be properly matched at reassembly.		
4.	Short case section (6) to long case section (8)	Eight capscrews (5) and four locking plates (4)	Remove.	Discard locking plates(4).
5.		Differential case assembly (1)	Remove from vise (3).	
6.	Short case section (6) to long case section (8)	Two alinement pins (7)	Install.	Use spanner wrench to hold assembly.

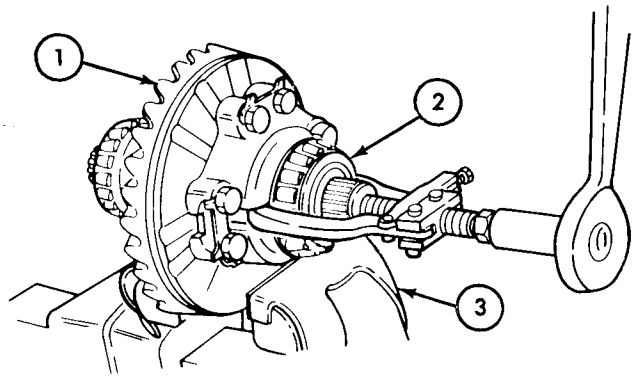

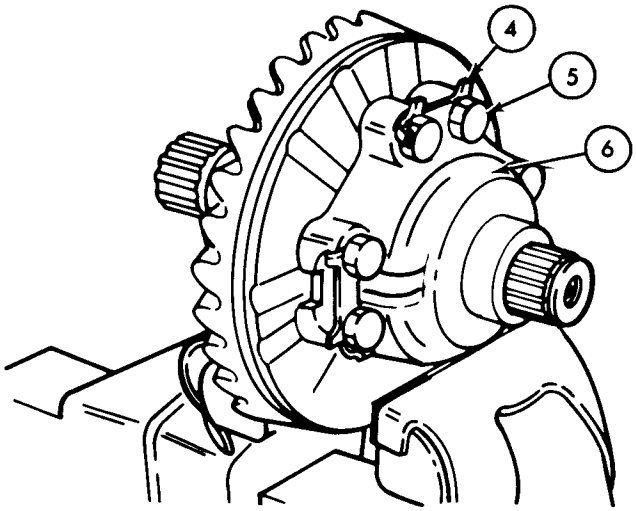

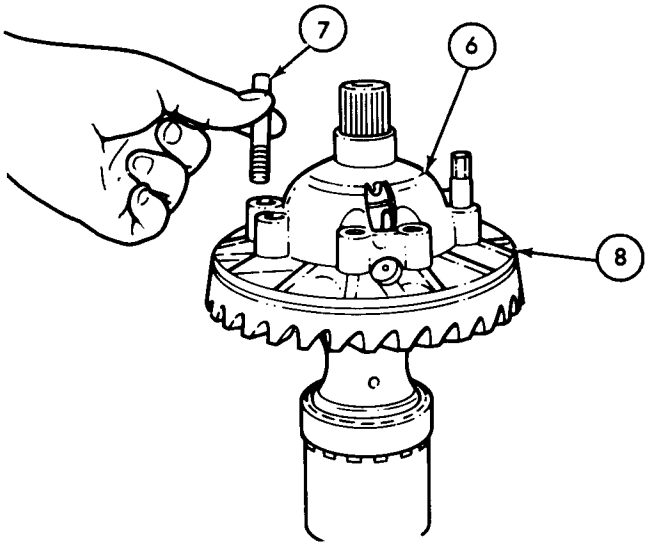

TA 156019

11-9. Differential Case Assembly Maintenance (Cont'd)

STEP NO.	LOCATION	ITEM	ACTION	REMARKS
7.	Long case section (3)	Ring gear (2)	Tap on alinement pins (1) to remove.	
8.		Short case section (10) and long case section (3)	Separate.	
9.		Differential spider (8), four spider gears (6), four thrust washers (7), one short side gear thrust washer (11), and one short side gear (9).	Remove from short case section (10).	
10.		Four thrust washers (7) and spider gears (6)	Remove from spider (8).	
11.		Long side gear thrust washer (4) and long side gear (5)	Remove from long case section (3).	

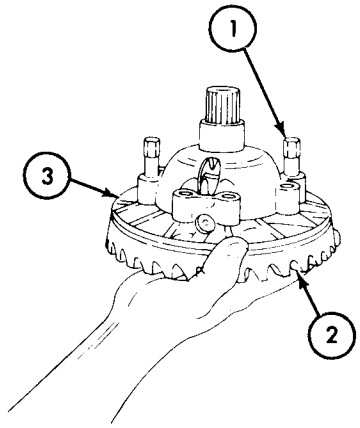

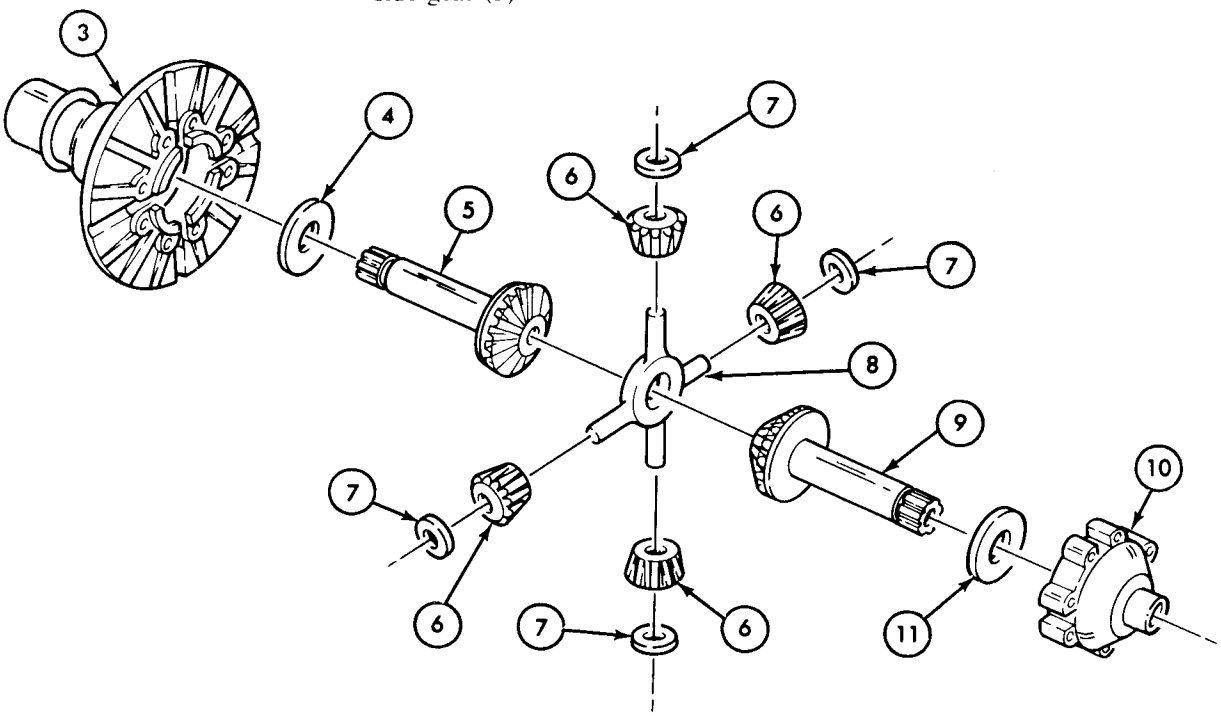

TA 156020

11-9. Differential Case Assembly Maintenance (Cont'd)

STEP NO.	LOCATION	ITEM	ACTION	REMARKS
	b. CLEANING, INSPECTION, AND REPAIR			
		WARNING • Drycleaning solvent is flammable and will not be used near an open flame. A fire extinguisher will be kept nearby when the solvent is used. Use only in well-ventilated places. Failure to do this may result in injury to personnel and/or damage to equipment. • Compressed air source will not exceed 30 psi. When cleaning with compressed air, eyeshields must be worn. Failure to wear eyeshields may result in injury to the eyes.		
12.		All metal parts except bearings	*a.* Place in drycleaning solution.	Be sure oil passages are clean. See TM 9-214 for care and maintenance of bearings.
			b. Blow dry with compressed air.	
13.		Cast parts and machined surfaces	Inspect for wear, burrs, grooves, scratches, cracks, chips, and breaks.	Remove burrs and small scratches with crocus cloth. Replace if cracked, chipped, broken, worn, or severely scratched. (See table 11-3 for wear limits.)

11-9. Differential Case Assembly Maintenance (Cont'd)

STEP NO.	LOCATION	ITEM	ACTION	REMARKS
14.		Thrust washers (1)	Inspect for distortion, scores, marks, burrs, and wear.	Replace if distorted, scored, burred, or worn. (See table 11-3 for wear limits.)
15.		Ring gear (2) and spider gears (3)	Inspect for scuffs, nicks, burrs, broken teeth, and wear.	Remove burrs, small nicks, and scuffs with soft stone. Replace if severely scuffed, nicked, teeth broken, or worn. (See table 11-3 for wear limits.)
16.		Splined parts (4)	Inspect for burrs, nicks, chips, breaks, and wear.	Remove burrs with soft stone. Replace if nicked, chipped, broken, or worn. (See table 11-3 for wear for wear limits.)

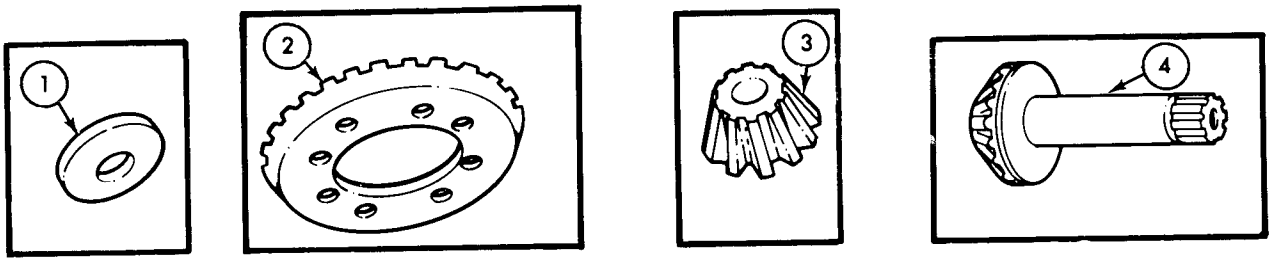

c. REASSEMBLY

17.		Long case side bearing (7)	Press onto long case section (5).	Use arbor press and driver (6).
18.		Short case side bearing (8)	Press onto short case section (9).	Use arbor press and driver (6).

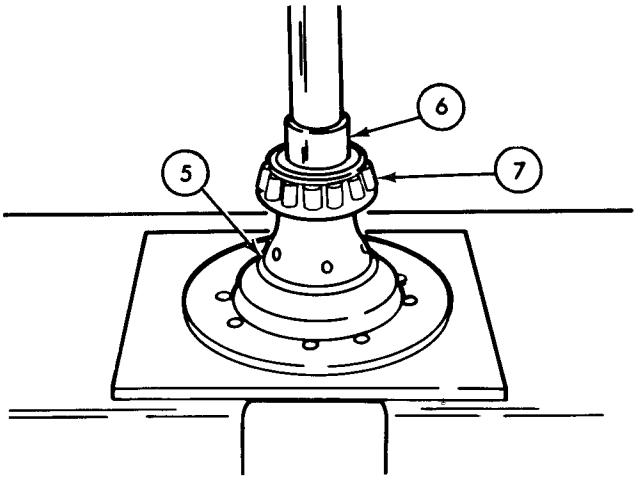

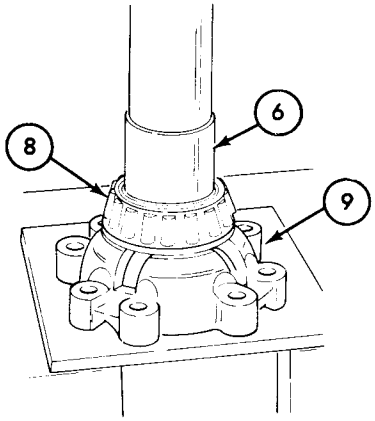

TA 156021

11-9. Differential Case Assembly Maintenance (Cont'd)

STEP NO.	LOCATION	ITEM	ACTION	REMARKS
19.		Long case section thrust washer (1) and side gear (13)	*a.* Lubricate back face of gear (13) and both sides of washer (1). *b.* Install in long case section (5).	Use OE/HDO lubricant.
20.		Spider (12), four spider gears (3), and four thrust washers (10)	Lubricate all four spider journals (12), gears (3), and both sides of thrust washers (10).	Use OE/HDO lubricants.
21.		Four spider gears (3) and thrust washers (10)	*a.* Place on spider (12). *b.* Install in long case section (5).	
22.		Short case section thrust washer (1), and side gear (11)	*a.* Lubricate backface of gear (11) and both sides of washer (1). *b.* Install in short case section (9).	Use OE/HDO lubricant.
23.		Short case section (9) and long case section (5)	Place together and aline scribe marks.	

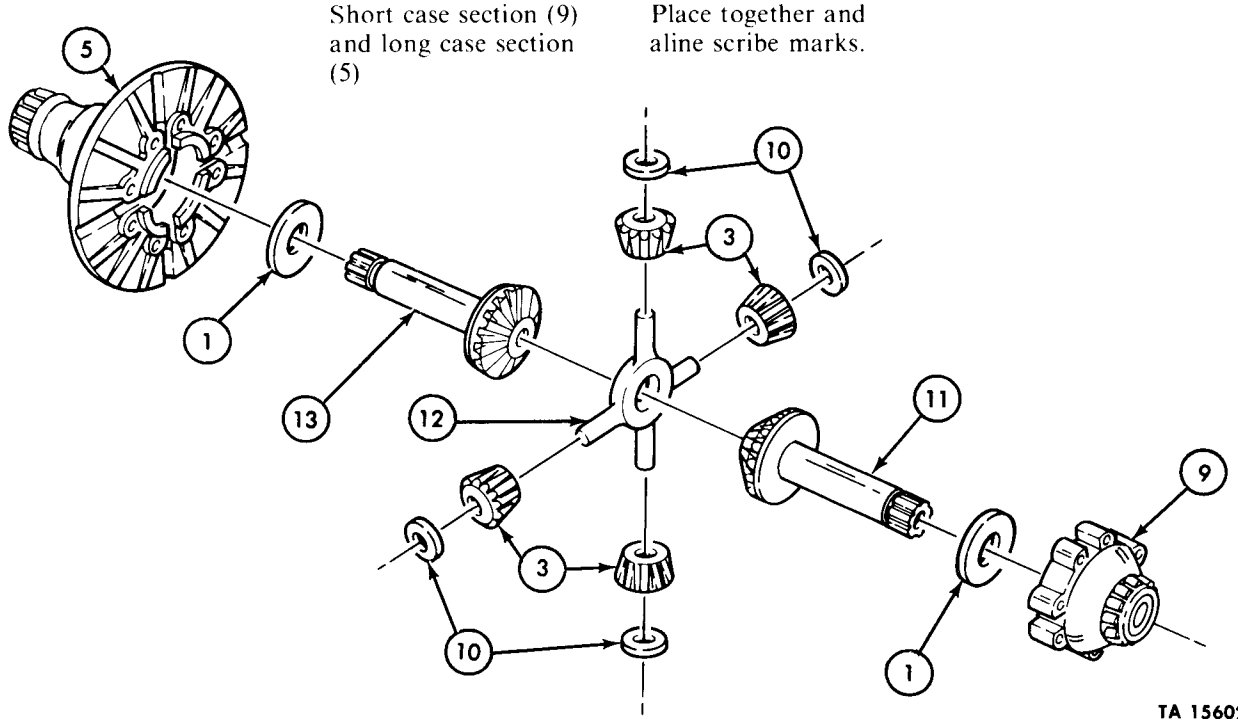

TA 156022

11-9. Differential Case Assembly Maintenance (Cont'd)

STEP NO.	LOCATION	ITEM	ACTION	REMARKS
24.		Ring gear (3)	Place onto case assembly (1) and hold.	
25.		Two alinement pins (2)	Start into case assembly (1) and ring gear (3).	
26.		Eight case assembly capscrews (8)	Lubricate threads.	Use OE/HDO lubricant.
27.		Short case section (7) and long case section (4)	Secure with two new locking plates (5) and four capscrews (8) opposite each other.	
28.		Two alinement pins (2)	Remove from case assembly (1).	
29.		Case assembly (1)	Place in vise (9).	Use tightened capscrews as holding place.
30.		Two new locking plates (5) and four capscrews (8)	Install in remaining holes and tighten.	Tighten all eight capscrews to 65-85 lb-ft (88-115 N•m).

11-9. Differential Case Assembly Maintenance (Cont'd)

STEP NO.	LOCATION	ITEM	ACTION	REMARKS
31.		Four locking plates (5)	Bend tabs (6) over capscrew heads (8).	

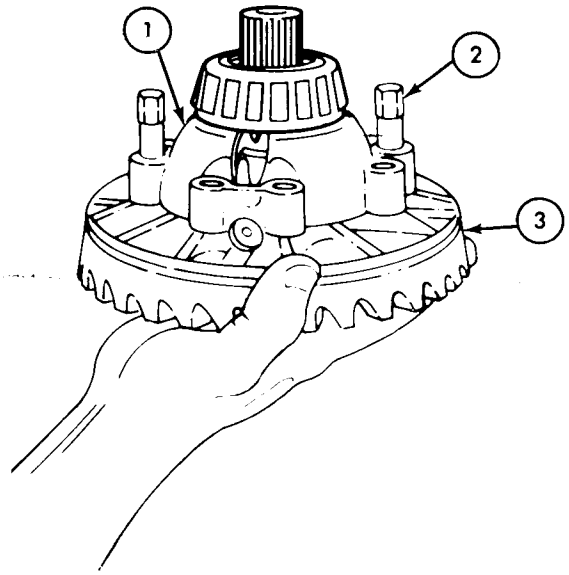

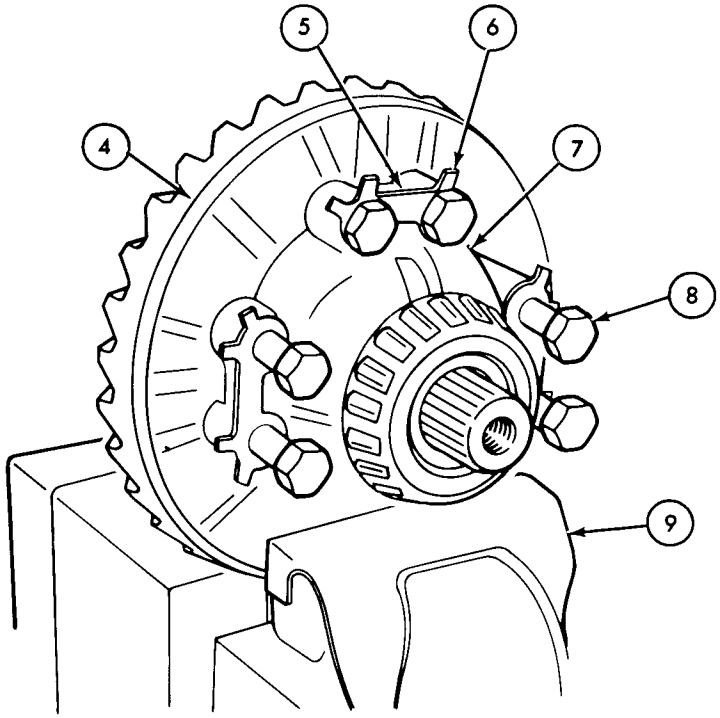

END OF TASK!

FOLLOW-ON TASK: Reassemble differential housing (para 11-8).

TA 156023

11-10. Ring and Pinion Gear Bearing Preload Tests

This task covers:

a. Pinion Gear Bearing Preload Test *b. Ring Gear Bearing Preload Test*

INITIAL SETUP:

Applicable Models
All

Equipment Condition Reference
Para 11-8

Condition Description
Differential housing disassembled.

Test Equipment
None

Special Tools
Torque wrench (0-175 lb-ft)
Torque wrench (0-200 lb-in)
Adapter
Spanner wrench
Arbor press
Flange holding tool

Special Environmental Conditions
None

Materials/Parts
None

Personnel Required
One mechanic

General Safety Instructions
None

Manual References
TM 9-2320-218-34P

STEP NO.	LOCATION	ITEM	ACTION	REMARKS
a. PINION GEAR BEARING PRELOAD TEST				
1.		Inner bearing (2), bearing cup (3), spacer (4), and outer bearing (5)	Install onto front end of pinion shaft (1).	Use arbor press, and adapter.
				Inner bearing (2) bevel should slant toward outer end of shaft and outer bearing (5) bevel should slant toward center of shaft.

11-10. Ring and Pinion Gear Bearing Preload Tests (Cont'd)

STEP NO.	LOCATION	ITEM	ACTION	REMARKS
		CAUTION Rotate bearings while securing pinion flange to prevent binding and scoring.		
2.		Front pinion flange (6)	Secure to front end of pinion shaft (1) with washer (8), and nut (7).	Use soft jawed vice to hold shaft (1). Tighten 60-70 lb-ft (82-95 N•m). Use flange-holding tool.

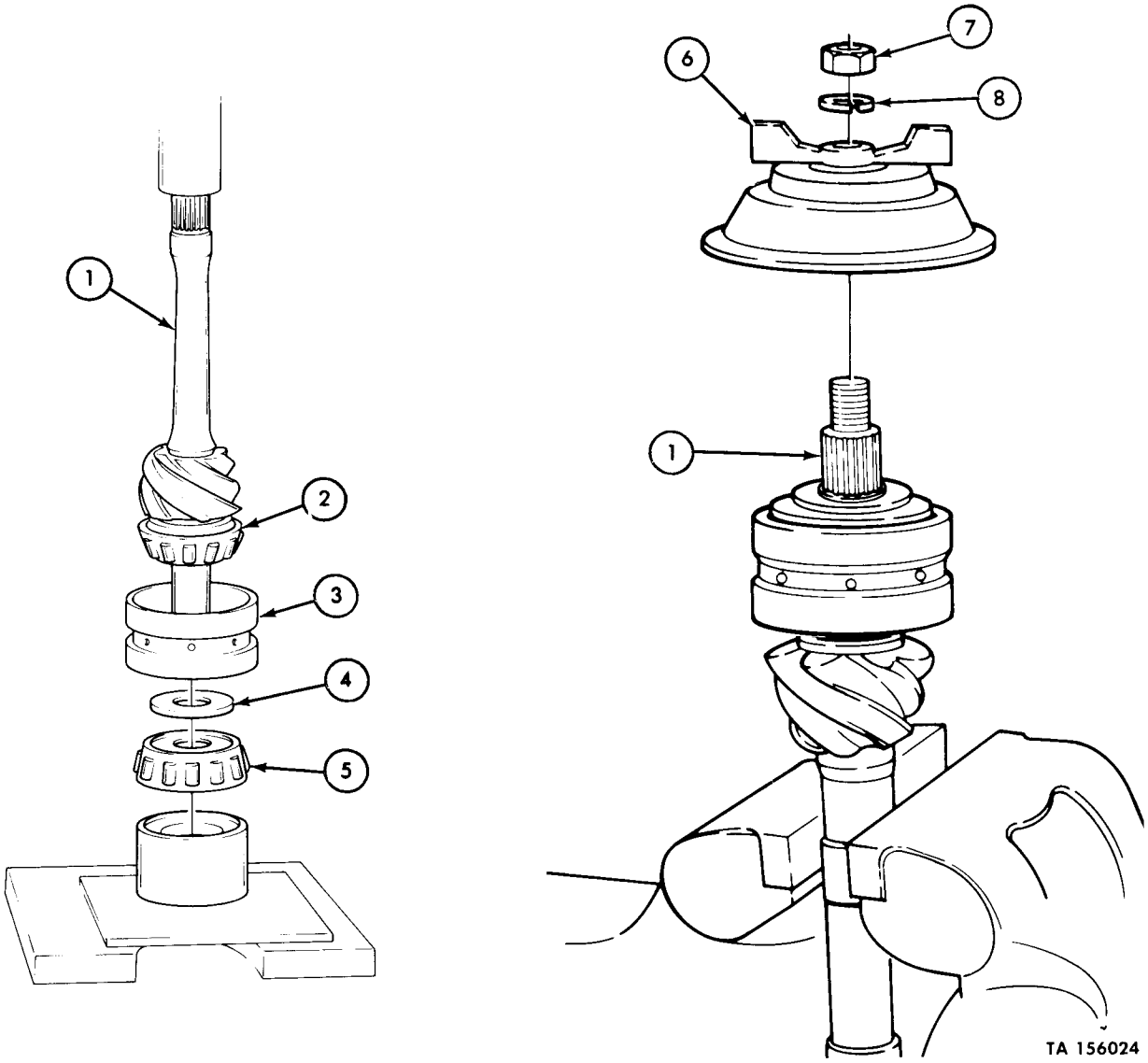

11-10. Ring and Pinion Gear Bearing Preload Tests (Cont'd)

STEP NO.	LOCATION	ITEM	ACTION	REMARKS
3.		Pinion shaft (1)	Hold outer bearing race (2), and turn shaft (1) using torque wrench (0-200 lb-in) to measure preload.	Turning effort for new bearing must be 10-20 lb-in (1.13-2.26 N•m). Turning effort for used bearings must approach 0 lb-in.

NOTE

Vary spacer size to obtain proper preload.

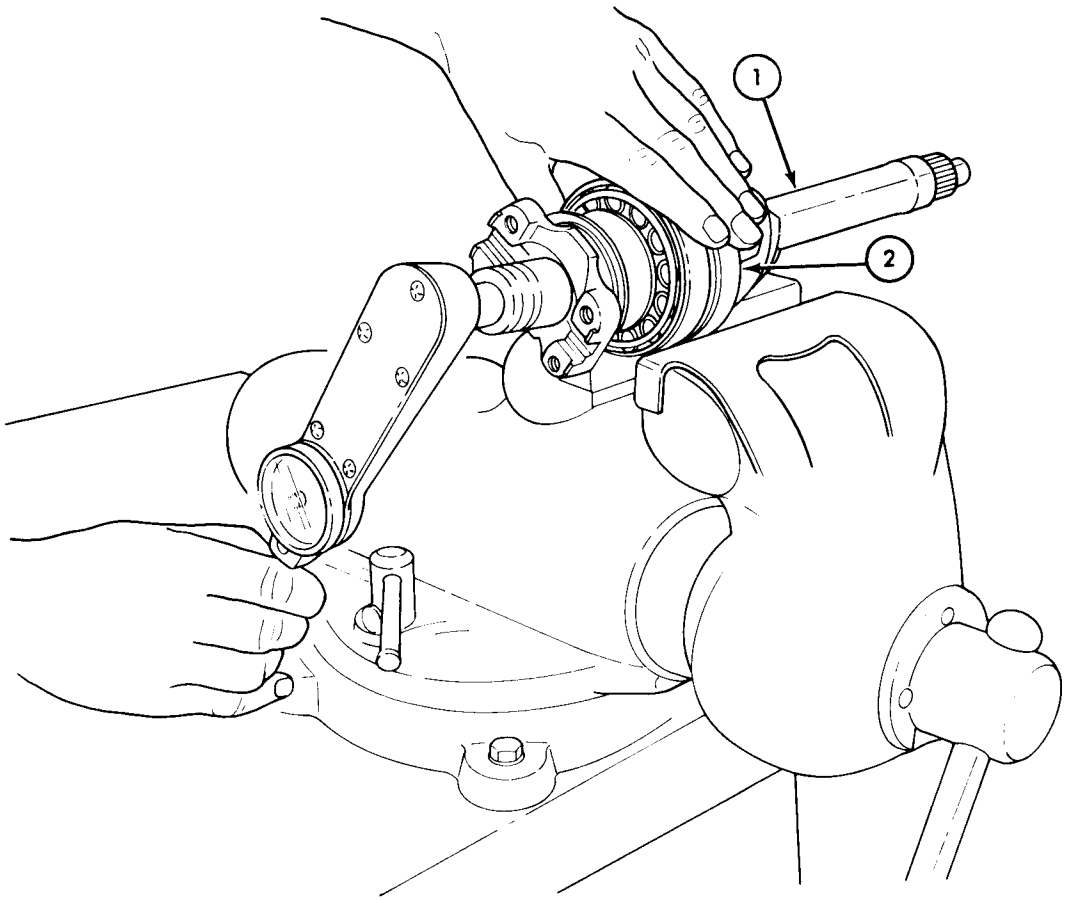

TA 156025

11-10. Ring and Pinion Gear Bearing Preload Tests (Cont'd)

STEP NO.	LOCATION	ITEM	ACTION	REMARKS
4.	Front pinion flange (5) to pinion shaft (1)	Nut (3) and washer (4)	Remove.	
5.		Front pinion flange (5)	Remove from pinion shaft (1).	

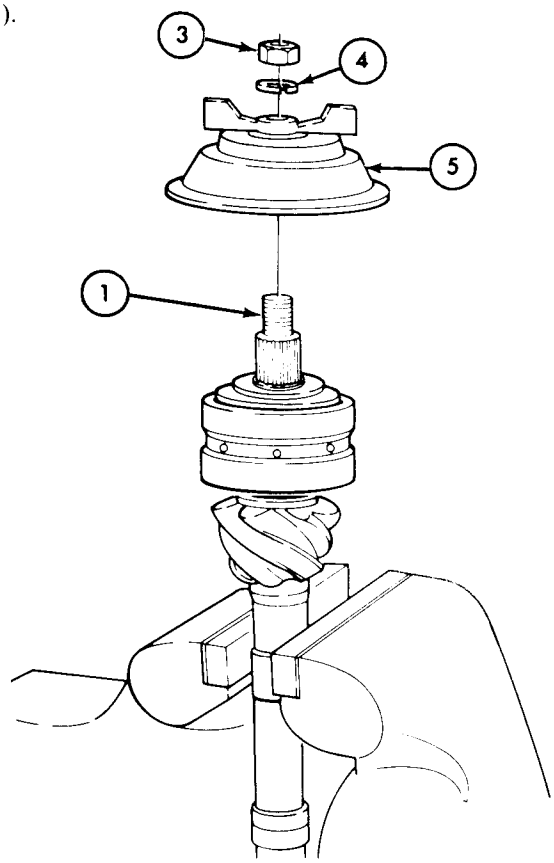

b. RING GEAR BEARING PRELOAD TEST

6.	Short section of differential case (6)	Pin or short drift (8)	Insert into one of the oil windows (7) to jam spider gears.	

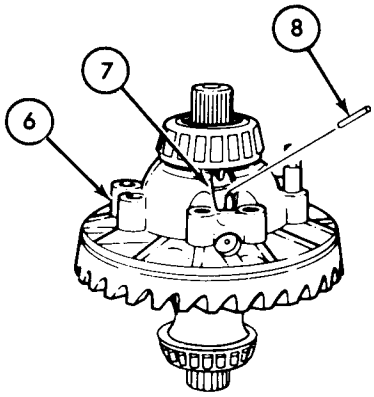

TA 156026

11-10. Ring and Pinion Gear Bearing Preload Tests (Cont'd)

STEP NO.	LOCATION	ITEM	ACTION	REMARKS
7.		Differential case (1)	Place in differential housing (2).	
8.		Housing cover (5) and new gasket (8)	Secure to differential housing (2) with ten lockwashers (6) and capscrews (7).	
9.		Two side gear bearing cups (4)	Install into differential housing (2) and cover (5).	Use spanner wrench socket.
10.		Two side gear bearing adjusting nuts (3)	*a.* Install into differential housing (2) and cover (5).	Finger tighten same number of turns each.

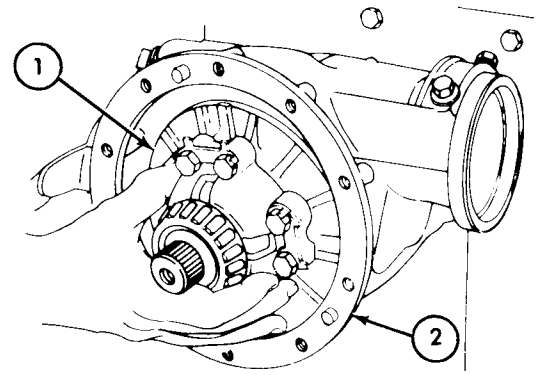

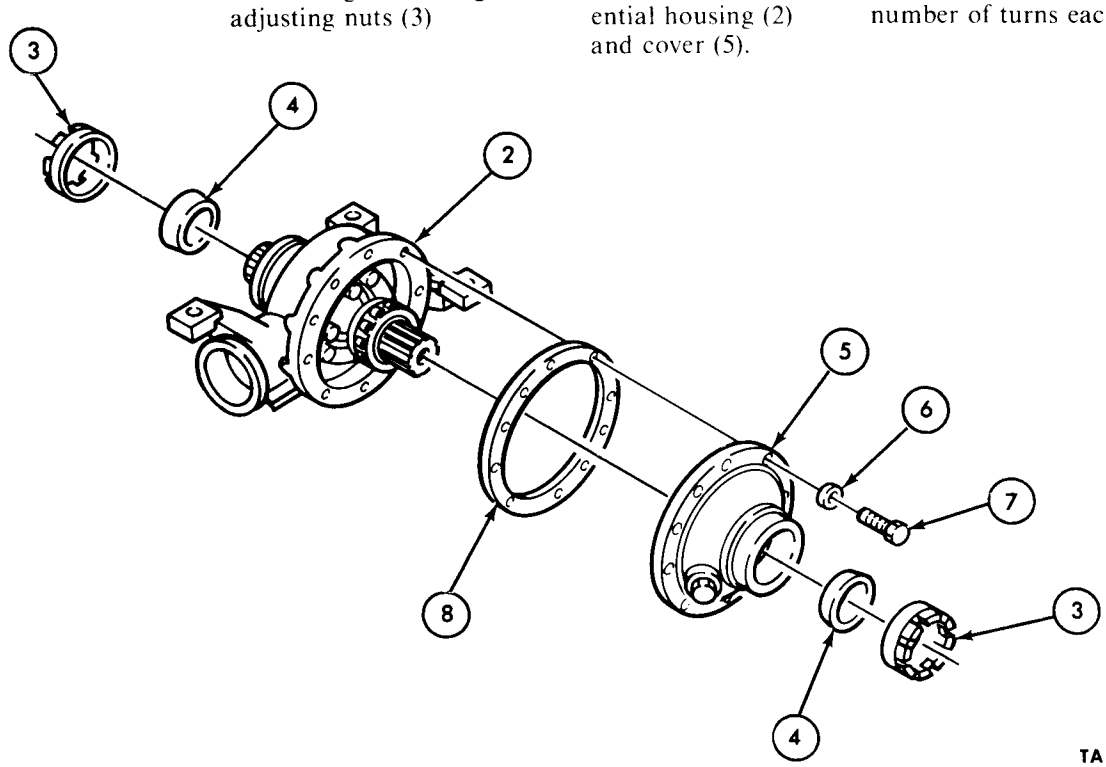

TA 156027

11-10. Ring and Pinion Gear Bearing Preload Tests (Cont'd)

STEP NO.	LOCATION	ITEM	ACTION	REMARKS
			b. Make a mark on adjusting nut (3) and differential housing (9).	
			c. Tighten.	One notch past mark for reused bearings or two notches past mark for new bearings.
11.		Flange capscrew (10)	Secure in side gear shaft (11).	
12.		Side gear shaft (11)	*a.* Turn using torque wrench (0-200 lb-in) to measure preload.	Turning effort must be 15-25 lb-in (1.7 to 2.9 N•m) for new bearings. Turning effort must be 2-6 lb-in (.23-.68 N•m) for reused bearings.

NOTE

Vary adjusting nut notches past reference line to obtain proper preload.

b. Record notches.

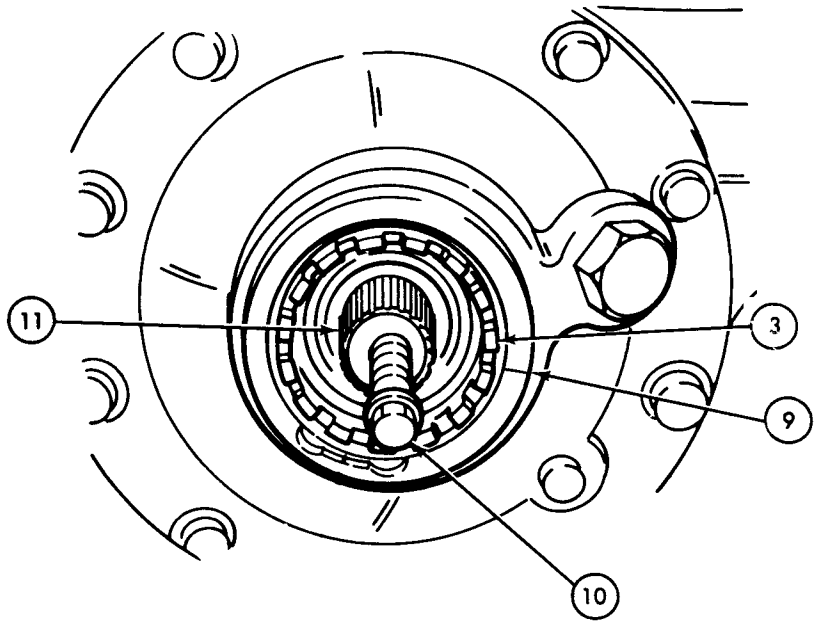

TA 156028

11-10. Ring and Pinion Gear Bearing Preload Tests (Cont'd)

STEP NO.	LOCATION	ITEM	ACTION	REMARKS
13.	Side gear shaft (1)	Flange capscrew (2)	Remove.	
14.	Housing cover (4) to differential housing (3)	Ten capscrews (6) and lockwashers (5)	Remove.	
15.		Housing cover (4) and gasket (7)	Remove from differential housing (3).	

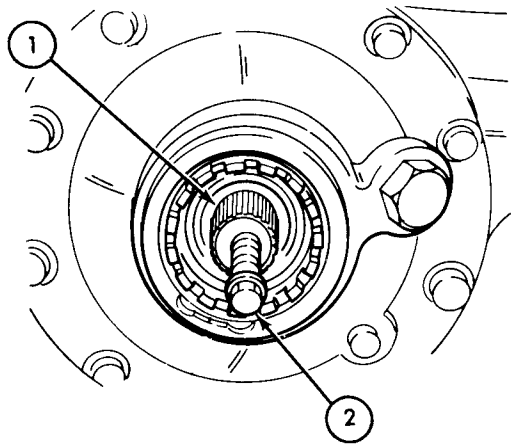

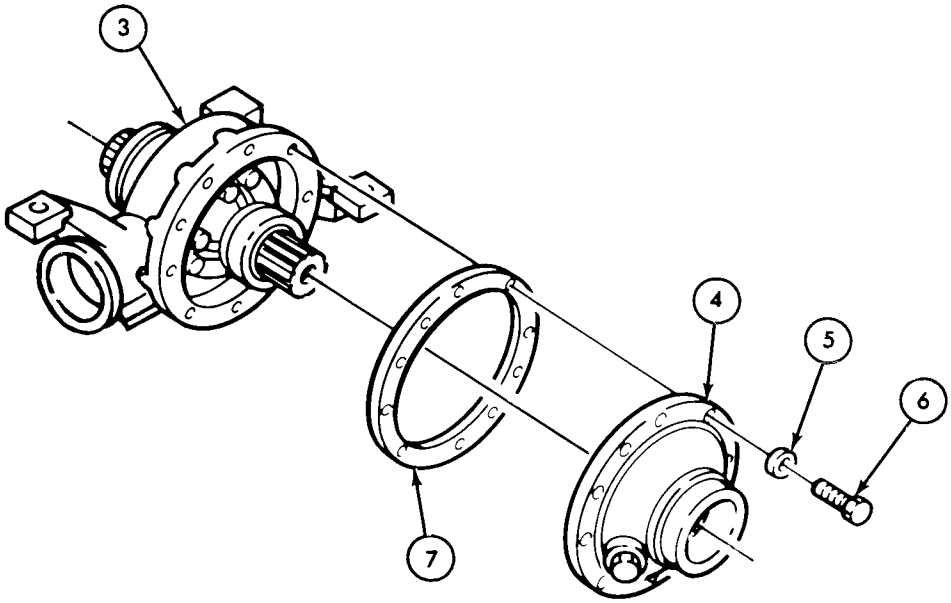

TA 156029

11-10. Ring and Pinion Gear Bearing Preload Tests (Cont'd)

STEP NO.	LOCATION	ITEM	ACTION	REMARKS
16.		Differential case assembly (8)	Remove from differential housing (3).	

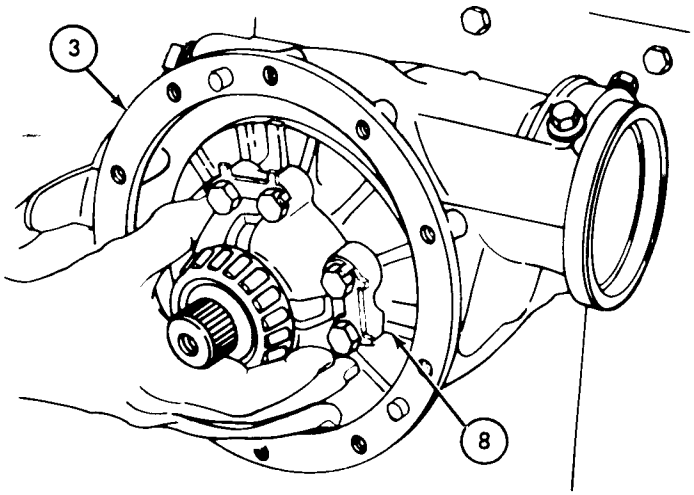

17.		Pin or short drift (10)	Remove from case assembly oil window (9).	

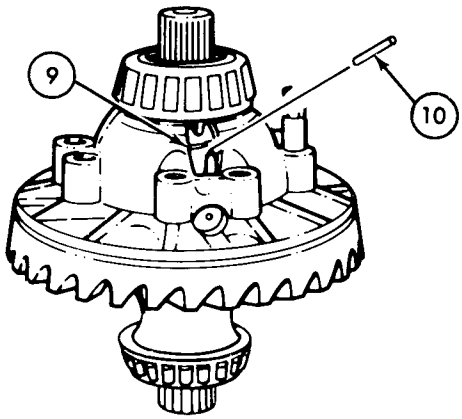

END OF TASK!

FOLLOW-ON TASK: Reassemble differential housing assembly (para 11-8, step 32).

TA 156030

11-11. Ring Gear Backlash Check and Adjustment

This task covers:

a. Checking Ring Gear Backlash *b. Adjusting Ring Gear Backlash*

INITIAL SETUP:

Applicable Models
All

Equipment Condition Reference
TM 9-2320-218-20-1-2

Condition Description
Propeller shaft removed for on-vehicle application only.

Test Equipment
Dial indicator

Special Tools
None

Special Environmental Conditions
None

Materials/Parts
Backlash check nut and bolt

Personnel Required
One mechanic

General Safety Instructions
None

Manual References
TM 9-2320-218-20-1-2

STEP NO.	LOCATION	ITEM	ACTION	REMARKS
		a. CHECKING RING GEAR BACKLASH		
1.		Backlash check nut (2) and bolt (3)	Secure to rear pinion gear flange (1).	
2.		Two side flanges (5)	Place on ring gear shafts (6).	
3.		Side gear flanges (5)	Hold to keep from turning.	
4.		Rear pinion gear flange (1)	Turn counterclockwise to end of play.	

11-11. Ring Gear Backlash and Adjustment (Cont'd)

STEP NO.	LOCATION	ITEM	ACTION	REMARKS

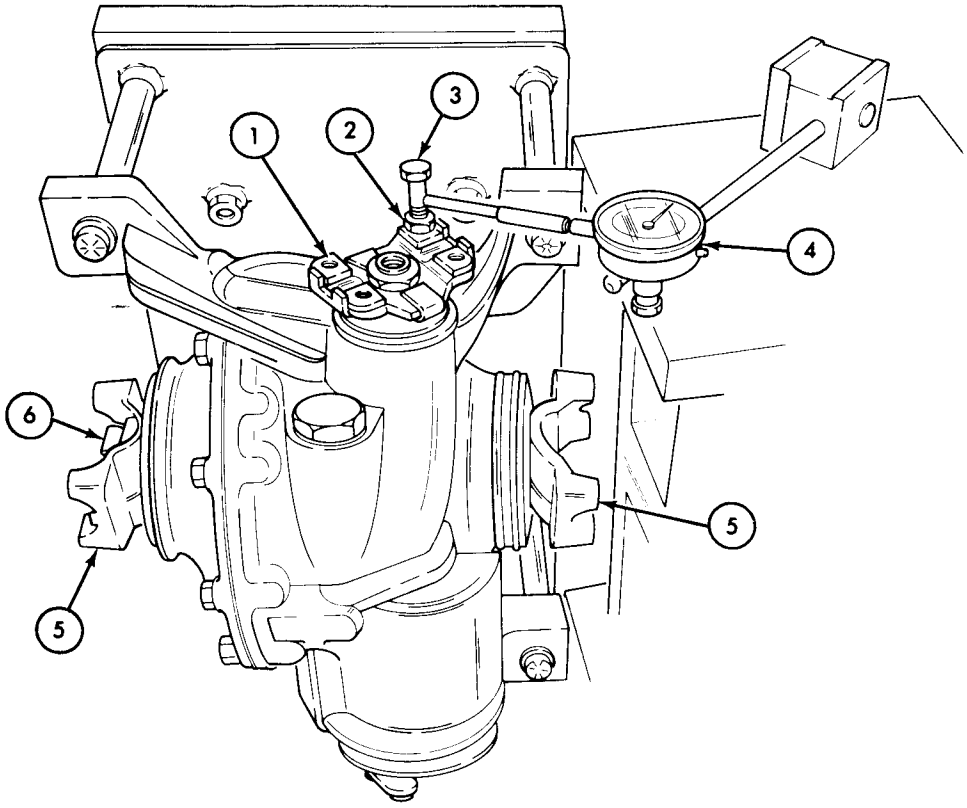

5.		Dial indicator (4)	*a.* Install against backlash check bolt (3).	Indicator (4) should be mounted at right angle to line drawn through center of flange (1) and flange mounting bolt (3).
			b. "Zero" indicator (4).	

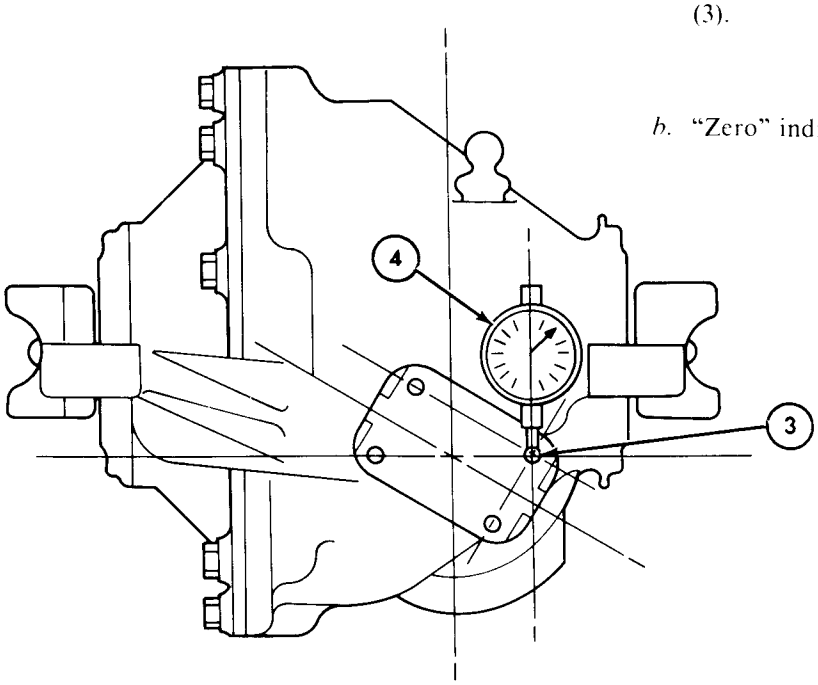

TA 156031

11-11. Ring Gear Backlash and Adjustment (Cont'd)

STEP NO.	LOCATION	ITEM	ACTION	REMARKS
6.		Rear pinion gear flange (1)	Turn clockwise to end of play, read, and record backlash.	Pinion flange mounting bolt (3) correct allowable backlash is 0.22 to .036 in. (.56-.91 mm).
7.		Pinion gear flange (1)	*a.* Turn 1/4 revolution. *b.* Repeat steps 3 through 7a three times.	

b. ADJUSTING RING GEAR BACKLASH

NOTE

Backlash measured on pinion flange mounting bolt must be between .022 and .036 in. (.56- .91 mm).

8.		Two side gear flanges (4)	Remove.	
9.		Two side gear bearing adjusting nuts (5)	Turn in opposite directions (one in and one out), one at a time to adjust backlash.	Turn both nuts the same amount to maintain correct preload. Left bearing adjusting nut (5) turns clockwise to decrease backlash and counterclockwise to increase backlash.

NOTE

Repeat steps 2 through 7 to check results of backlash adjustment.

10.		Two side bearing adjusting nuts (5)	Record number of notches past reference line (7) for reassembly.	
11.		Two side gear flanges (4)	Install on side gear shaft (6).	

11-11. Ring Gear Backlash and Adjustment (Cont'd)

STEP NO.	LOCATION	ITEM	ACTION	REMARKS
12.		Backlash check bolt (3) and nut (2)	Remove from rear pinion gear flange (1).	

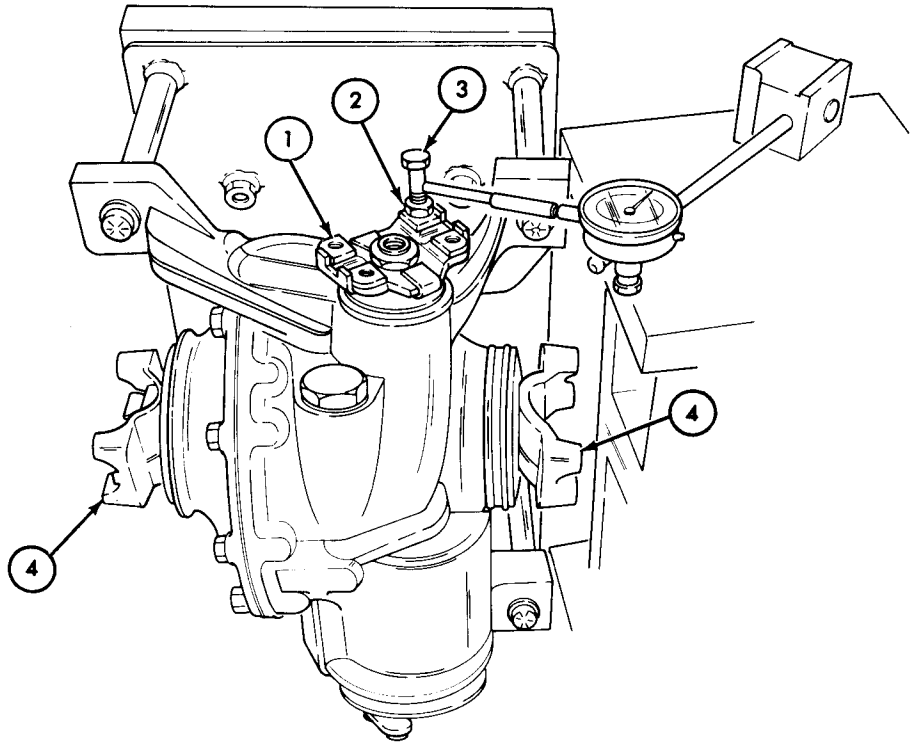

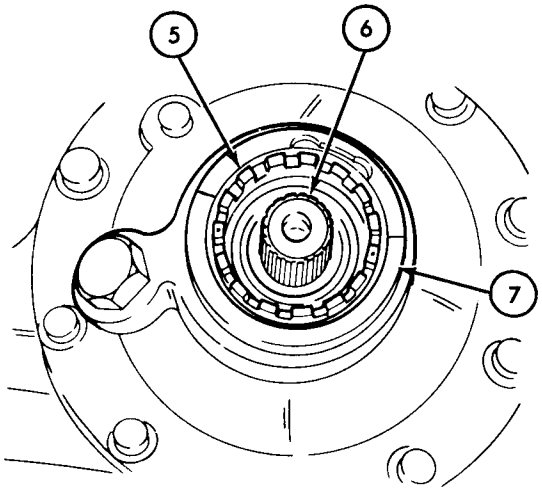

END OF TASK!

FOLLOW-ON TASK: Install propeller shaft for on-vehicle application only (TM 9-2320-218-20-1-2).

TA 156032

11-12. Ring and Pinion Gear Mesh Check and Adjustment

This task covers:

a. Mesh Check *b. Mesh Adjustment*

INITIAL SETUP:

Applicable Models
All

Equipment Condition Reference
Para 11-11

Condition Description
Ring gear backlash check and adjustment.

Test Equipment
None

Special Tools
Spanner wrench

Special Environmental Conditions
None

Materials/Parts
Rope (5 ft.)
White oil lead (NSN 8010-00-239-5737)

Personnel Required
One mechanic

General Safety Instructions
None

Manual References
None

STEP NO.	LOCATION	ITEM	ACTION	REMARKS
		NOTE		
		This procedure is designed for use after partial reassembly of differential housing as specified in paragraph 11-8.		
		a. MESH CHECK		
1.		Rope (5)	*a.* Tie ends together.	
			b. Loop around two side gear flanges (2).	
			c. Place pry bar (1) between rope (5) and differential (4), and apply pressure.	Applies resistance to two side gear flanges (2).
2.		Pinion shaft (3)	Rotate both directions to make mesh pattern.	

11-12. Ring and Pinion Gear Mesh Check and Adjustment (Cont'd)

STEP NO.	LOCATION	ITEM	ACTION	REMARKS
3.	Differential housing (4)	Rope (5) and two side gear flanges (2)	Remove.	
4.	Housing cover (7) to differential housing (4)	Ten capscrews (9) and lockwashers (8)	Remove.	
5.		Housing cover (7) and gasket (6)	Remove from differential housing (4).	

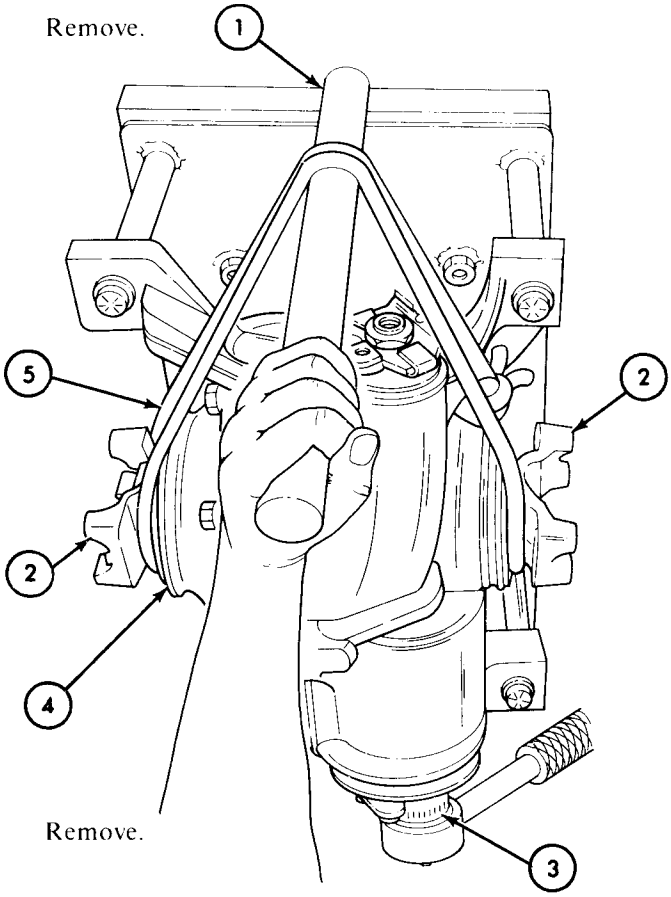

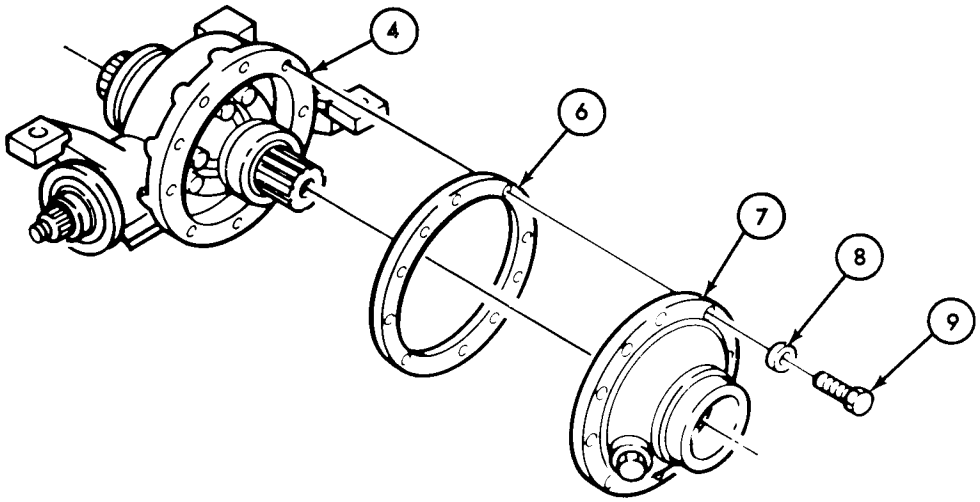

TA 156033

11-12. Ring and Pinion Gear Mesh Check and Adjustment (Cont'd)

STEP NO.	LOCATION	ITEM	ACTION	REMARKS
6.	Differential housing (1)	Differential case assembly (2)	Remove.	
7.		Ring gear teeth (3)	Inspect mesh pattern.	White lead will show where gear contact was made. (See table 11-2 for comparing mesh patterns.)

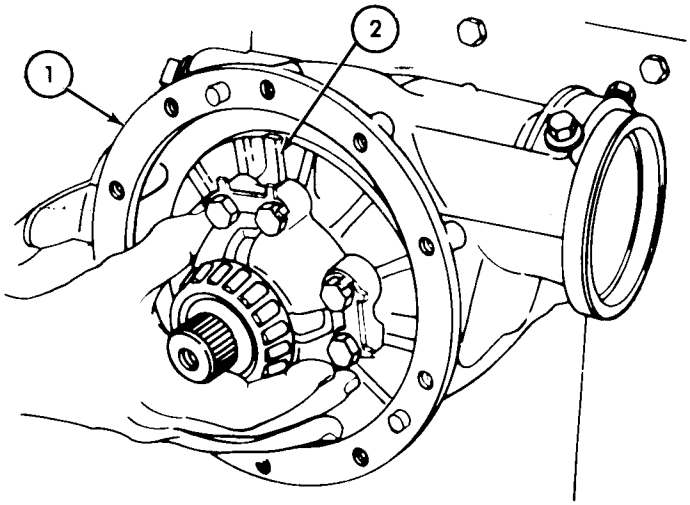

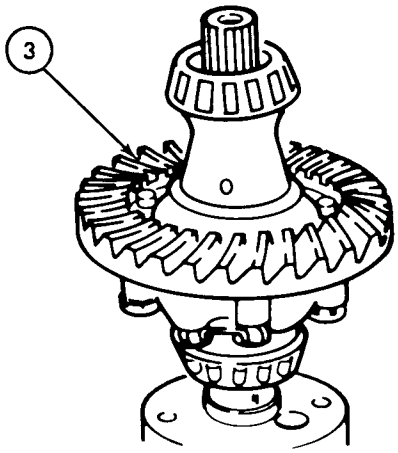

NOTE

If pattern condition B and C in table 11-2 exists, perform mesh adjustment.

b. MESH ADJUSTMENT

8.	Two pinion gear flanges (4) to pinion shaft (5)	Two nuts (7) and washers (6)	Remove.	
9.		Two pinion gear flanges (4)	Remove from pinion shaft (5).	

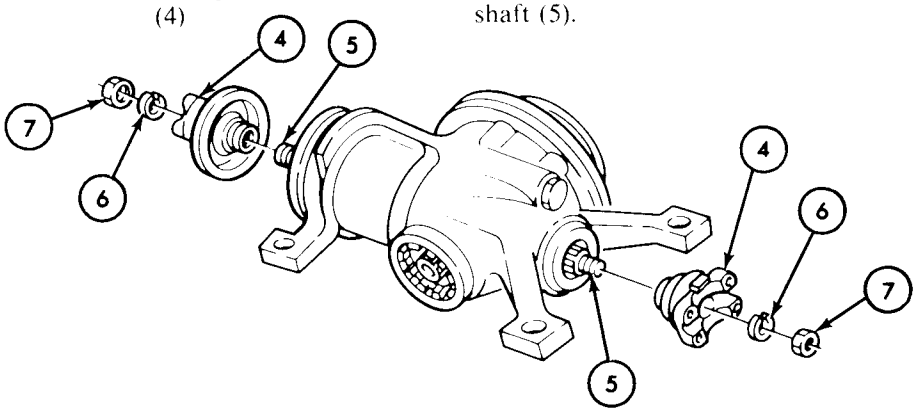

TA 156034

11-12. Ring and Pinion Gear Mesh Check and Adjustment (Cont'd)

Table 11-2. Ring Gear Patterns

Red lead pattern shape and position	*Probable cause*	*Corrective action*
A 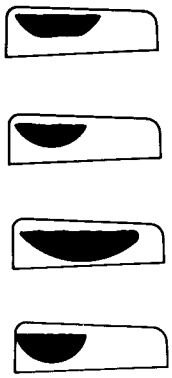	Acceptable patterns	Not required.
B 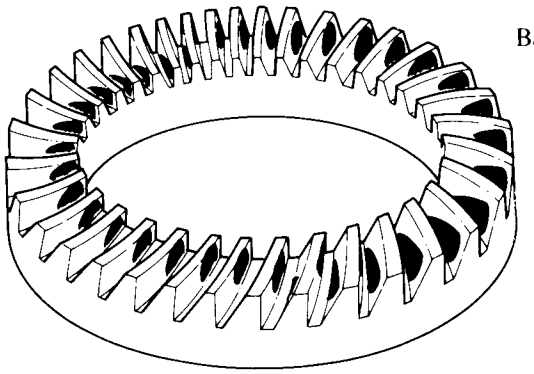	Pinion shim too thick. Backlash is correct.	Move pinion out of ring gear. (See para 11-12*b*.)
C 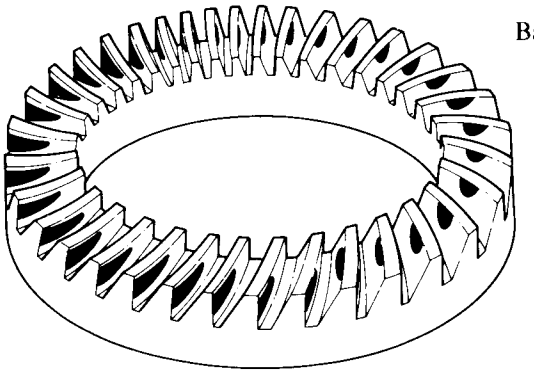	Pinion shim too thin. Backlash is correct.	Move pinion into ring gear. (See para 11-12*b*.)

TA 156035

11-12. Ring and Pinion Gear Mesh Check and Adjustment (Cont'd)

Table 11-2. Ring Gear Patterns (Cont'd)

Red lead pattern shape and position	*Probable cause*	*Corrective action*
D 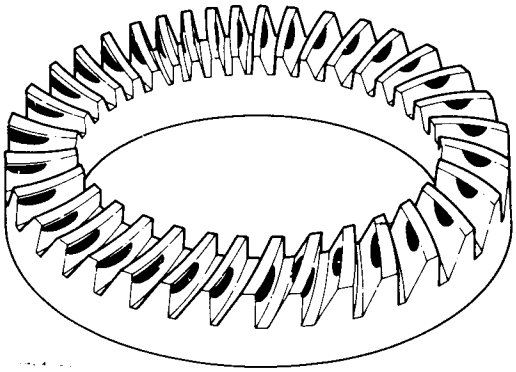	Decrease backlash. Pinion shim correct.	Move ring gear towards pinion gear by turning left side bearing adjusting nut clockwise. (See para 11-11*b*.)
E 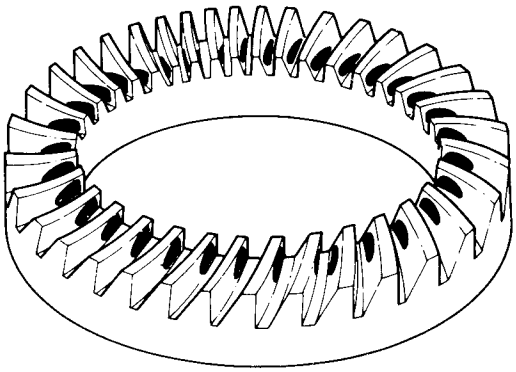	Increase backlash. Pinion shim correct.	Move ring gear away from pinion gear by turning left side gear bearing adjusting nut counterclockwise. (See para 11-11*b*.)

TA 156036

11-12. Ring and Pinion Gear Mesh Check and Adjustment (Cont'd)

STEP NO.	LOCATION	ITEM	ACTION	REMARKS
10.	Differential housing (2)	Pinion gear bearing adjusting nut (1)	Remove.	Use spanner wrench.
11.	Front differential housing (2)	Pinion shaft assembly (3) and shim (6)	Remove.	Use arbor press (4) and adapter (5).

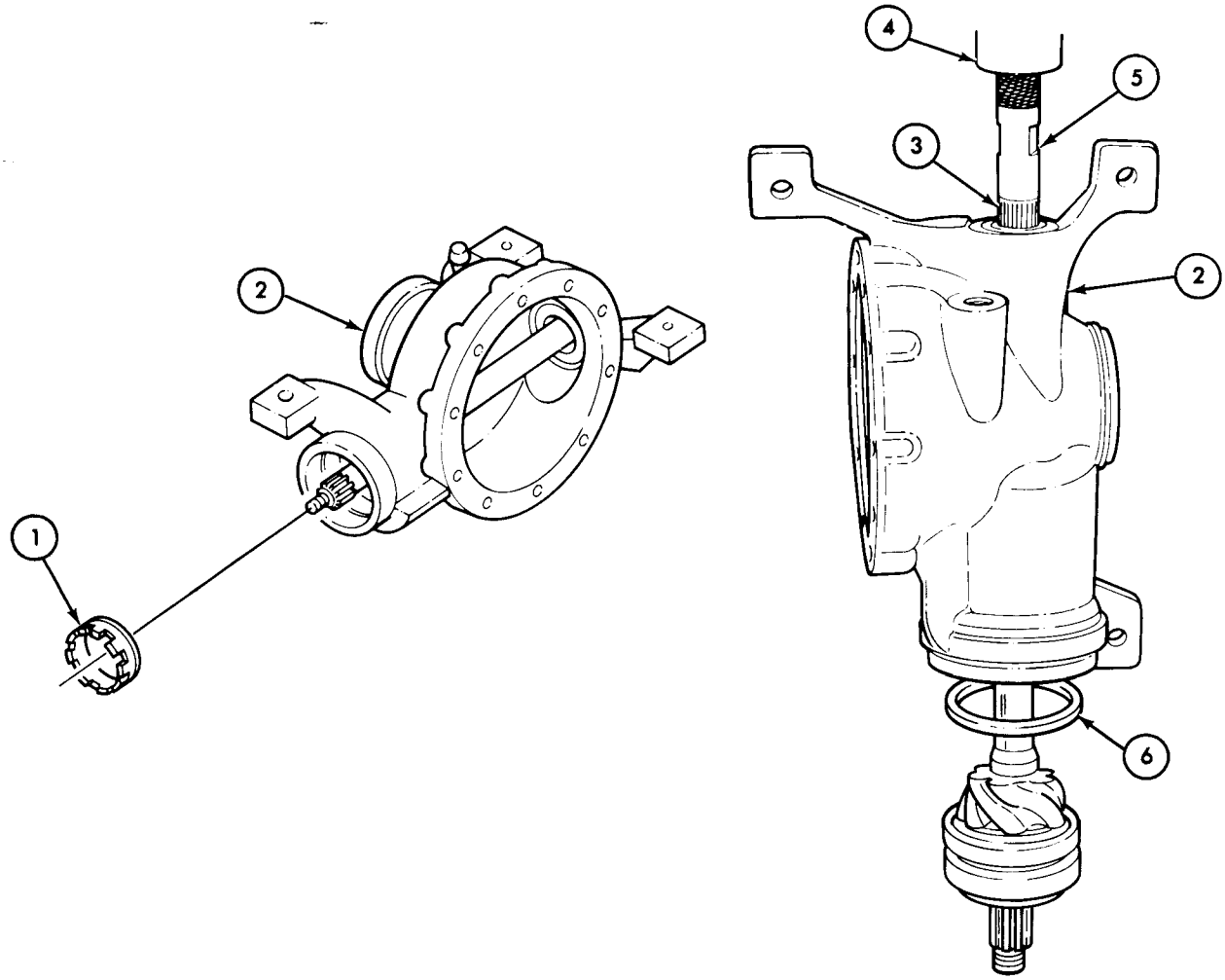

TA 156037

11-12. Ring and Pinion Gear Mesh Check and Adjustment (Cont'd)

STEP NO.	LOCATION	ITEM	ACTION	REMARKS
		NOTE Vary shim size to obtain proper distance between pinion gear and ring gear. (See table 11-2).		
12.		Shim (2)	Install into front of differential housing (1).	

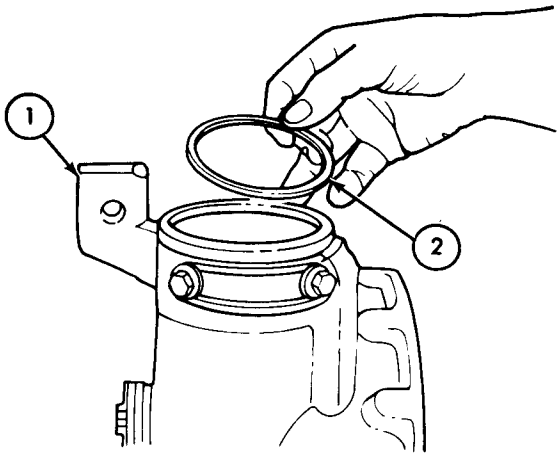

13.		Pinion shaft assembly (3)	Install into front differential housing (1).	Use arbor press (4) and spanner wrench socket (5).

TA 156038

11-12. Ring and Pinion Gear Mesh Check and Adjustment (Cont'd)

STEP NO.	LOCATION	ITEM	ACTION	REMARKS

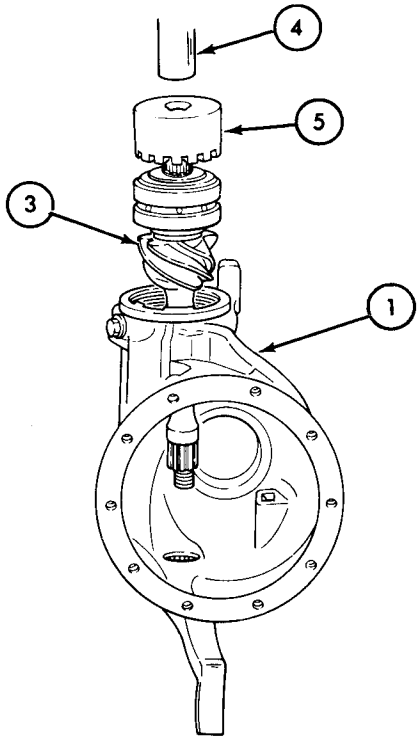

14.		Front bearing adjusting nut (6)	Secure into differential housing (1).	Use spanner wrench. Tighten 40-50 lb-ft (54-68 N•m).

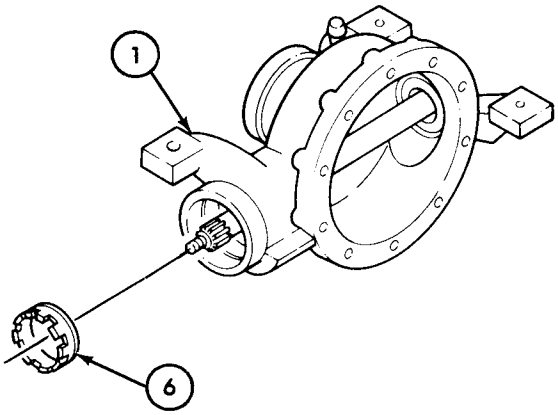

TA 156039

11-12. Ring and Pinion Gear Mesh Check and Adjustment (Cont'd)

STEP NO.	LOCATION	ITEM	ACTION	REMARKS
		CAUTION Rotate bearings while securing pinion flanges to prevent binding and scoring.		
15.		Front and rear pinion flanges (1) and (5)	Secure each to pinion shaft (2) with washers (3) and nuts (4).	Tighten front 60-70 lb-ft (81-95 N•m). Tighten rear 35-45 lb-ft (47-61 N•m).
16.		Differential case (6)	*a.* Clean white lead pattern from gear teeth (7). *b.* Apply coat of white lead in oil to gear teeth (7). *c.* Install into differential housing (8).	

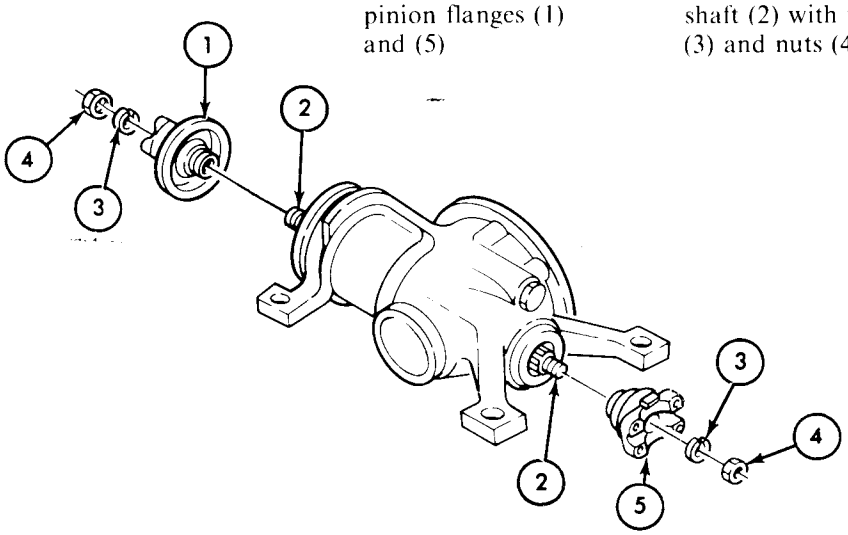

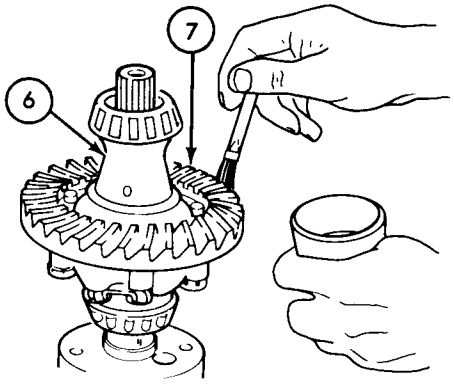

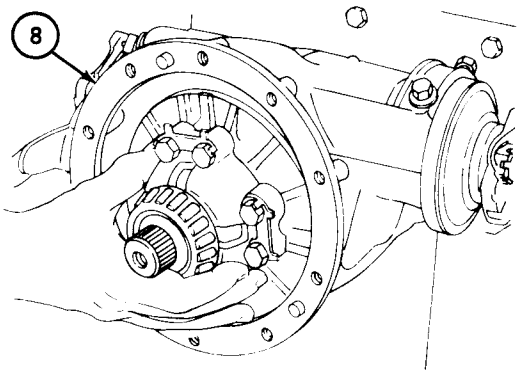

TA 156040

11-12. Repair and Replacement Standards — Differential (Cont'd)

STEP NO.	LOCATION	ITEM	ACTION	REMARKS
17.		Left side bearing adjusting nut (9)	Loosen several turns from housing cover (10).	
18.		Gasket (13) and housing cover (10)	Secure to differential housing (8) with ten lockwashers (11), and capscrews (12).	Tighten 30-35 lb-ft (41-47 N•m).
19.			Repeat task *a*, mesh check.	

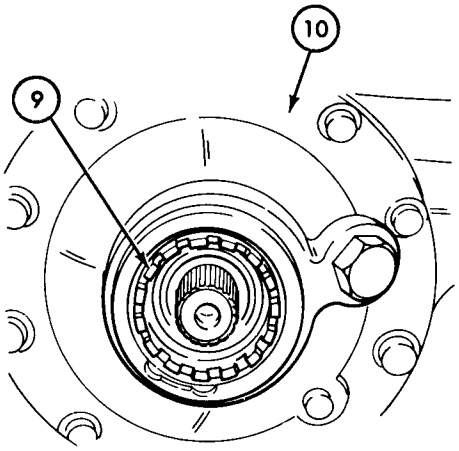

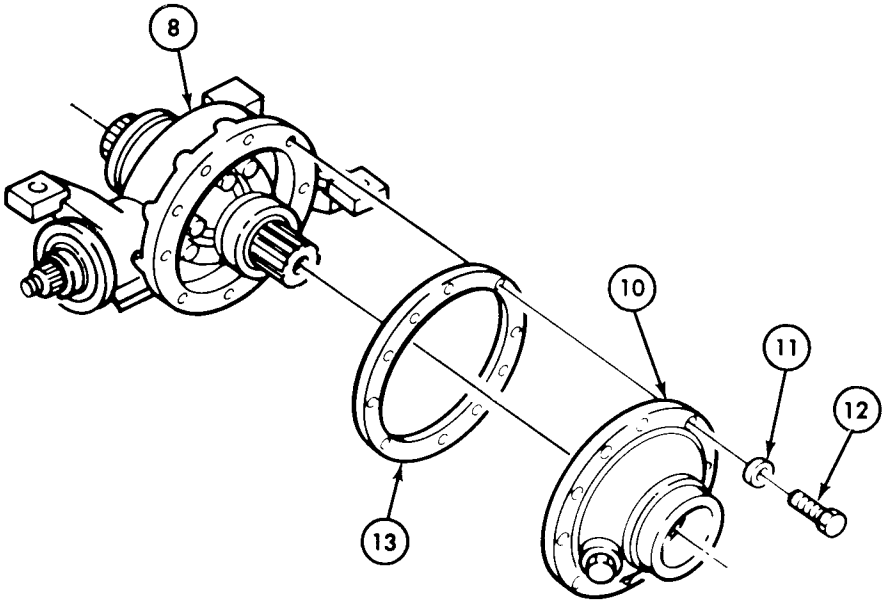

END OF TASK!

TA 156041

Section III. REPAIR AND REPLACEMENT STANDARDS

11-13. General

This section provides repair and replacement standards pertaining to direct and general support for the differential assembly. The repair and replacement standards included herein give minimum, maximum and key clearance of new or repaired parts. An asterisk (*) in the "wear limit" column indicates that a part should be replaced when worn beyond dimensions given in "size and fit of new parts" column. In "size and fit of new parts" column, the letter "L" indicates a loose fit (clearance), and the letter "T" indicates a tight fit (interference).

11-14. Repair and Replacement Standards - Differential

The components covered by the repair and replacement standard listed in table 11-3 are illustrated below. To find the component and its tolerance requirements, match the reference number listed to the extreme left in table 11-3.

Table 11-3. Repair and Replacement Standards — Differential

Ref. No.	Point of Measurement	Size and Fit of New Parts	Wear Limits
	Differential Housing		
1	Inside diameter, side bearing bore	3.001-3.002 in. (76.225-76.251 mm)	*
2	Inside diameter, pinion rear bearing bore	1.8500-1.8509 in. (46.990-47.013 mm)	*
3	Inside diameter, pinion front bearing bore	3.1870-3.1895 in. (80.950-81.013 m)	*
4	Inside diameter, side bearing bore	3.001-3.002 in. (76.225-76.251 mm)	*

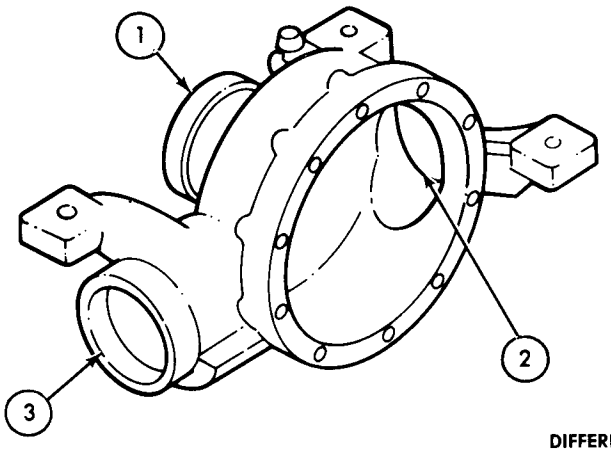

DIFFERENTIAL HOUSING

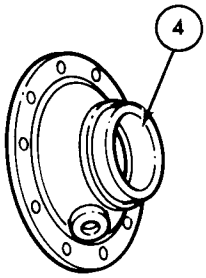

HOUSING COVER

TA 156042

11-14. Repair and Replacement Standards — Differential (Cont'd)

Table 11-3. Repair and Replacement Standards — Differential (Cont'd)

Ref. No.	Point of Measurement	Size and Fit of New Parts	Wear Limits
	Pinion Shaft and Associated Parts		
5	Pinion shaft, large-end bearing front cone	0.9600-0.9605 in. (24.384-24.397 mm)	*
6	Pinion shaft, small-end bearing seat	1.1088-1.1084 in. (28.164-28.153 mm)	*
7	Pinion shaft, large-end bearing seat diameter	0.9610-0.9615 in. (24.410-24.422 mm)	*
8	Bearing cup assembly, outside diameter	3.1875-3.1885 in. (80.963-80.998 mm)	*
9	Bearing mounting diameter	0.9600-0.9605 in. (24.384-24.397 mm)	*
10	Outside diameter at oil seal contact area	1.312-1.315 in. (33.325-33.401 mm)	*
11	Bearing outside diameter	1.8504-1.8499 in. (47.000-46.987 mm)	*
12	Outside diameter at oil seal contact area	1.312-1.315 in. (33.325-33.401 mm)	*

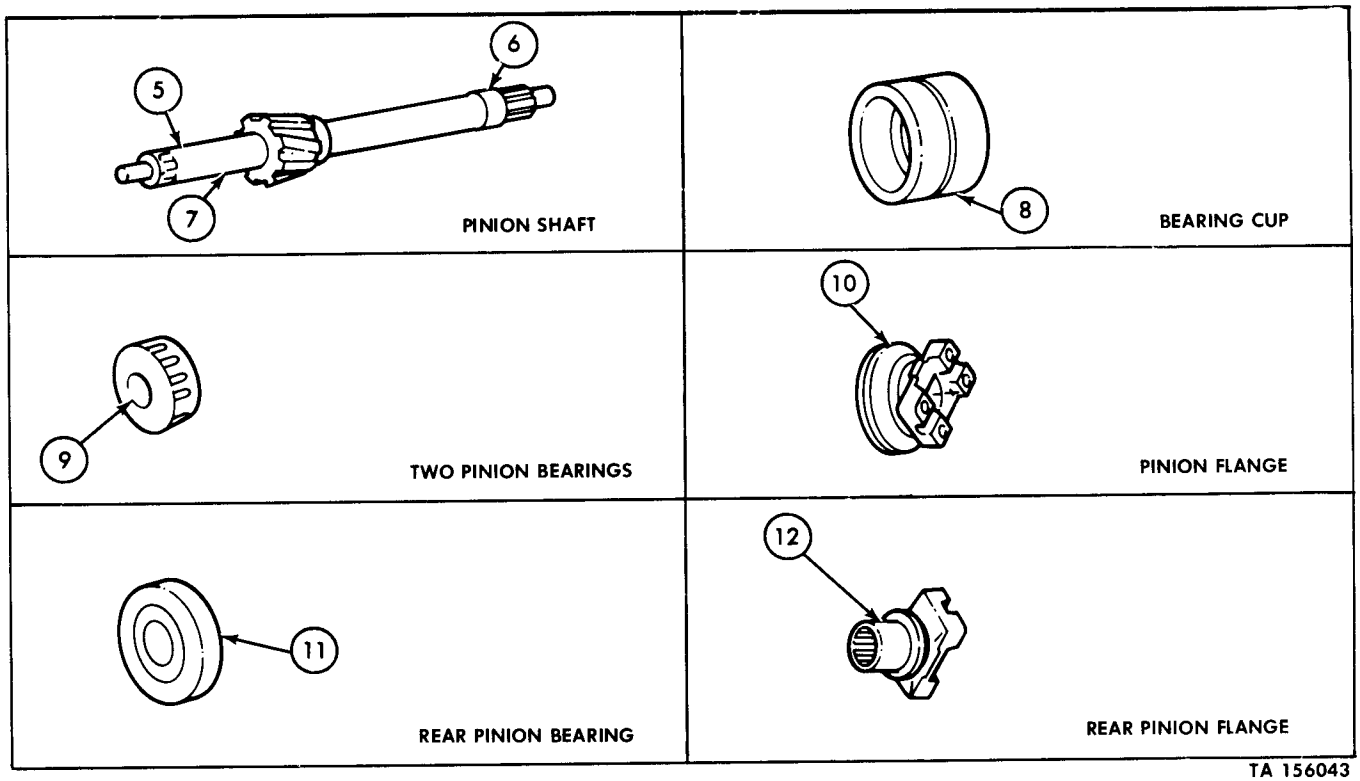

TA 156043

11-14. Repair and Replacement Standards — Differential (Cont'd)

Table 11-3. Repair and Replacement Standards — Differential (Cont'd)

Ref. No.	Point of Measurement	Size and Fit of New Parts	Wear Limits
	Differential Case Assembly		
13	Inside diameter of gear	3.500-3.501 in. (88.900-88.925 mm)	*
14	Inside diameter of bore	1.126-1.127 in. (28.600-25.626 mm)	1.129 in. (28.679 mm)
15	Outside diameter at side bearing seat	1.6265-1.6275 in. (41.313-41.3385 mm)	*
16	Inside diameter of eight drive-gear mounting holes	0.447-0.450 in. (11.354-11.430 mm)	*
17	Outside diameter at ring gear shoulder	3.499-3.500 in. (88.875-88.900 mm)	*

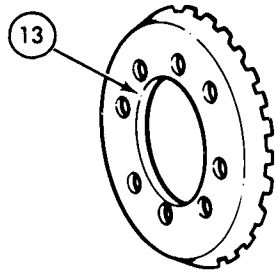

RING GEAR

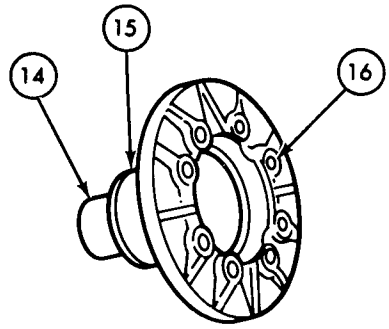

CASE ASSEMBLY LONG SECTION

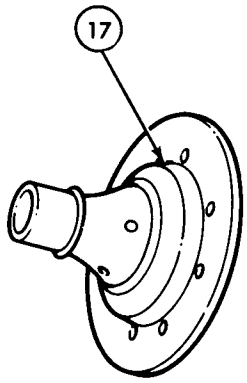

CASE ASSEMBLY LONG SECTION

TA 156044

11-14. Repair and Replacement Standards — Differential (Cont'd)

Table 11-3. Repair and Replacement Standards — Differential (Cont'd)

Ref. No.	Point of Measurement	Size and Fit of New Parts	Wear Limits
18	Outside diameter of side gear shaft (long)	1.124-1.125 in. (28.550-28.575 mm)	1.123 in. (28.524 mm)
19	Outside diameter of spider shafts	0.6245-0.6252 in. (15.862-15.880 mm)	0.624 in. (15.850 mm)
20	Inside diameter of spider gear bore	0.627-0.629 in. (15.926-15.977 mm)	0.630 in. (16.002 mm)
21	Outside diameter of side gear shaft (short)	1.124-1.125 in. (28.550-28.575 mm)	1.123 (28.524 mm)

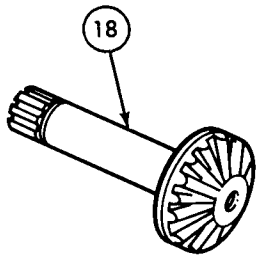

LONG SIDE GEAR

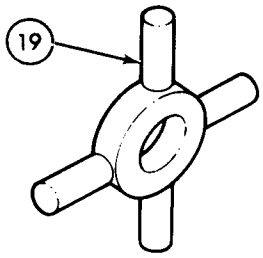

SPIDER SHAFT

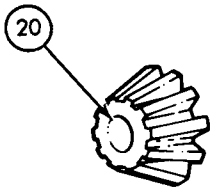

SPIDER GEAR

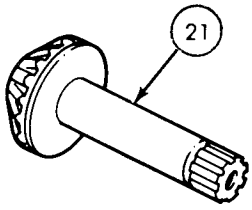

SHORT SIDE GEAR

TA 156045

11-14. Repair and Replacement Standards — Differential (Cont'd)

Table 11-3. Repair and Replacement Standards — Differential (Cont'd)

Ref. No.	Point of Measurement	Size and Fit of New Parts	Wear Limits
22	Inside diameter of side gear shaft bore	1.126-1.127 in. (28.600-28.626 mm)	1.129 in. (28.677 mm)
23	Inside diameter of spider shaft bore (when mated to long case section)	0.6241-0.6276 in. (15.852-15.941 mm)	*
24	Outside diameter at bearing seat	1.626-1.627 in. (41.300-41.326 mm)	*
25	Outside diameter of bearing cup	2.999-3.0008 in. (76.175-76.220 mm)	*
26	Inside diameter of bearing cone	1.6250-1.6255 in. (41.275-41.288 mm)	*
27	Outside diameter of drive flange at oil seal contact area	1.560-1.565 in. (39.624-39.751 mm)	*
28	Thickness of thrust washer	0.046-0.048 in. (1.168-1.219 mm)	0.044 in. (1.118 mm)
29	Thickness of thrust washer	0.030-0.032 in. (0.762-0.813)	0.029 in. (0.737 mm)

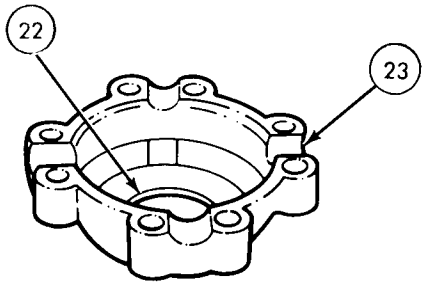

CASE ASSEMBLY SHORT SECTION

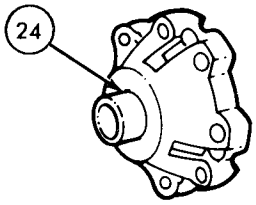

CASE ASSEMBLY SHORT SECTION

TA 156046

11-14. Repair and Replacement — Differential (Cont'd)

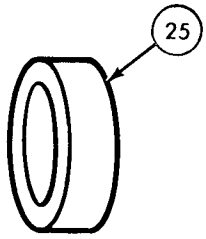

SIDE GEAR BEARING CUP

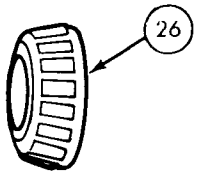

SIDE GEAR BEARING

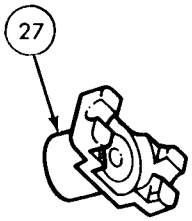

SIDE GEAR FLANGE

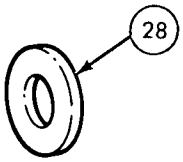

SIDE GEAR THRUST WASHER

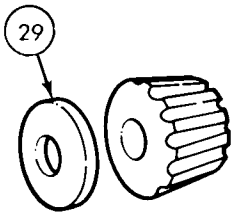

SPIDER GEAR THRUST WASHER

TA 156047

CHAPTER 12

SERVICE BRAKE MAINTENANCE

12-1. Overview

a. This chapter provides maintenance and repair information for the service brake components authorized for direct and general support levels. Each component and related information is covered in one of the following sections:

b. Section II is preceded by a list that provides a breakdown of the procedures covered in that section, and also provides a paragraph and page number leading you to each task.

Section I. DESCRIPTION AND DATA

12-2. General

This section provides description and data for the service brake components.

12-3. Description — Service Brakes

Service brakes are hydraulic drum type. Master cylinder, filler, and suspended brake pedal are mounted to cowl. A wheel cylinder is mounted near top of each backing plate, and brakeshoes are held in position on backing plate with springs.

12-3. Description — Service Brakes (Cont'd)

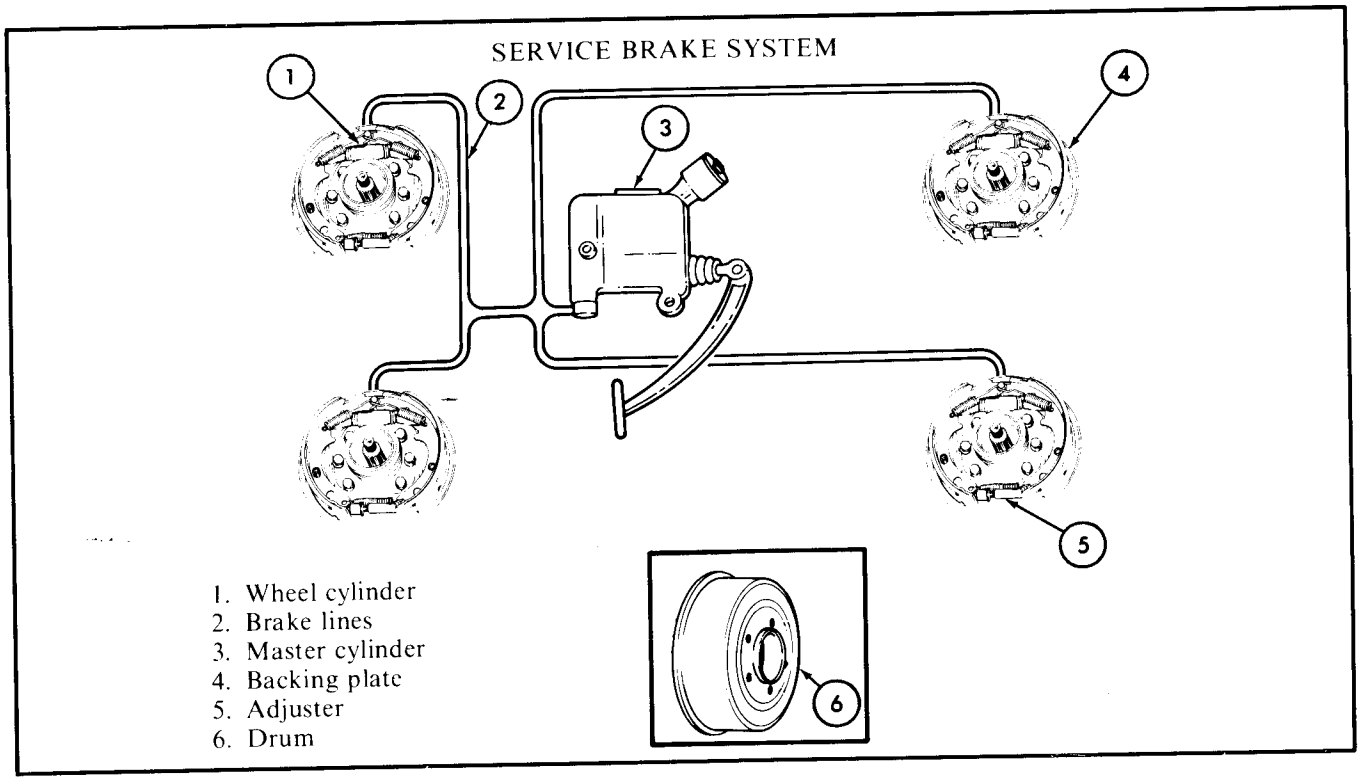

12-4. Tabulated Data

Table 12-1. Tabulated Data — Service Brake

Service brake:	
Type	hydraulic
Anchor	fixed
Diameter	9.120-9.130 in. (231.65-231.90 mm)
Width	2.00 in. (50.8 mm)
Lining area per brake	35.5 sq in. (229.05 sq cm)
Fluid capacity (system)	8.00 fluid oz (236.6 ml)
Wheel cylinder:	
Type	straight bore
Diameter:	
Front	1.00 in. (25.4 mm)
Rear	0.75 in. (19.05 mm)
Master cylinder:	
Location	cowl
Type	reservoir and cylinder
Bore size	1.00 in. (25.4 mm)
Material	aluminum alloy

TA 156079

Section II. SERVICE BRAKE MAINTENANCE

12-5. General

This section provides maintenance procedures for the service brake. To locate a specific procedure, see the service brake maintenance task summary below:

12-6. Service Brake Maintenance Task Summary

TASK PARA	PROCEDURES	PAGE NO.
12-7.	Service Brakedrum Inspection and Repair Inspection and Repair	12-4
12-8.	Brake Line Fabrication a. Flaring b. Bending	12-6

12-7. Service Brakedrum Inspection and Repair (Cont'd)

This task covers:

Inspection and Repair

INITIAL SETUP:

Applicable Models
All

Equipment Condition Reference — **Condition Description**
TM 9-2320-218-20-1-2 — Brakedrum removed from vehicle.

Test Equipment
Drum wear limit gage

Special Tools
Brakedrum lathe

Special Environmental Conditions
None

Materials/Parts
None

Personnel Required
One mechanic

General Safety Instructions
Eye protection will be worn during all machining operations.

Manual References
TM 9-2320-218-34P

STEP NO.	LOCATION	ITEM	ACTION	REMARKS
INSPECTION AND REPAIR				
1.		Brakedrum (1)	*a.* Check for warpage, cracks, and scored braking surface.	If warped or cracked, replace (see TM 9-2320-218-20-1-2).
			WARNING Eye protection must be worn to prevent injury to personnel during machine operation.	
			b. Install in drum lathe.	Follow manufacturer's operating instructions.
			c. Check for run-out with drum wear limit gage.	Run-out is 0.006 in. (.15 mm) or less.

12-7. Service Brakedrum Inspection and Repair (Cont'd)

STEP NO.	LOCATION	ITEM	ACTION	REMARKS
			d. Refinish surface if scored or run-out exceeds 0.006 in. (.15 mm).	If drum diameter is less than 9.19 in. (233.43 mm), replace.
			e. Remove from drum lathe.	

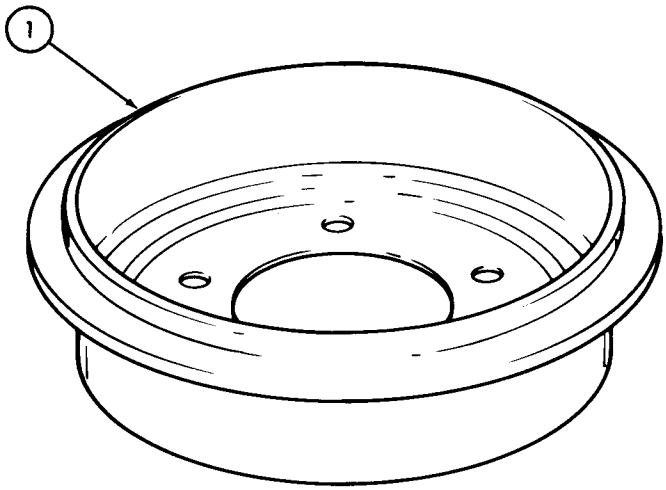

END OF TASK!

FOLLOW-ON TASK: Install service brakedrum (TM 9-2320-218-20-1-2).

TA 156080

12-8. Brake Line Fabrication

This task covers:

a. Flaring *b. Bending*

INITIAL SETUP:

Applicable Models	Equipment Condition Reference	Condition Description
All		None

Test Equipment
None

Special Tools
Flaring tool
Tube bender

Special Environmental Conditions
None

Materials/Parts
Tube section
PL-S oil

Personnel Required
One mechanic

General Safety Instructions
None

Manual References
TM 9-2320-218-34P

STEP NO.	LOCATION	ITEM	ACTION	REMARKS
			a. FLARING	
1.		Tube section (3)	*a.* Cut tube end (2) even and clean.	Use tube cutter (1), and do not overtighten while turning cutter.
			b. Remove burrs from fresh cut.	Use burr remover (4) on tube cutter (1).
2.		Flare nut (5)	Place on tube section (3).	
3.		Tube section (3)	Position so cut end (2) is above top of hinged die (10), a distance equal to thickness of adapter (6).	

12-8. Brake Line Fabrication (Cont'd)

STEP NO.	LOCATION	ITEM	ACTION	REMARKS
4.		Adapter (6)	*a.* Place a dab of PL-S oil on end of tube (2) and on recess around peg (7). *b.* Insert peg (7) into tube section (3).	
5.		Flaring tool screw actuator (8)	*a.* Place over top of adapter (6) and turn down until adapter (6) meets hinged die (10). *b.* Unscrew and remove adapter (6). *c.* Turn down again to create desired flare.	
6.	Flaring tool (9)	Tube section (3)	Remove.	

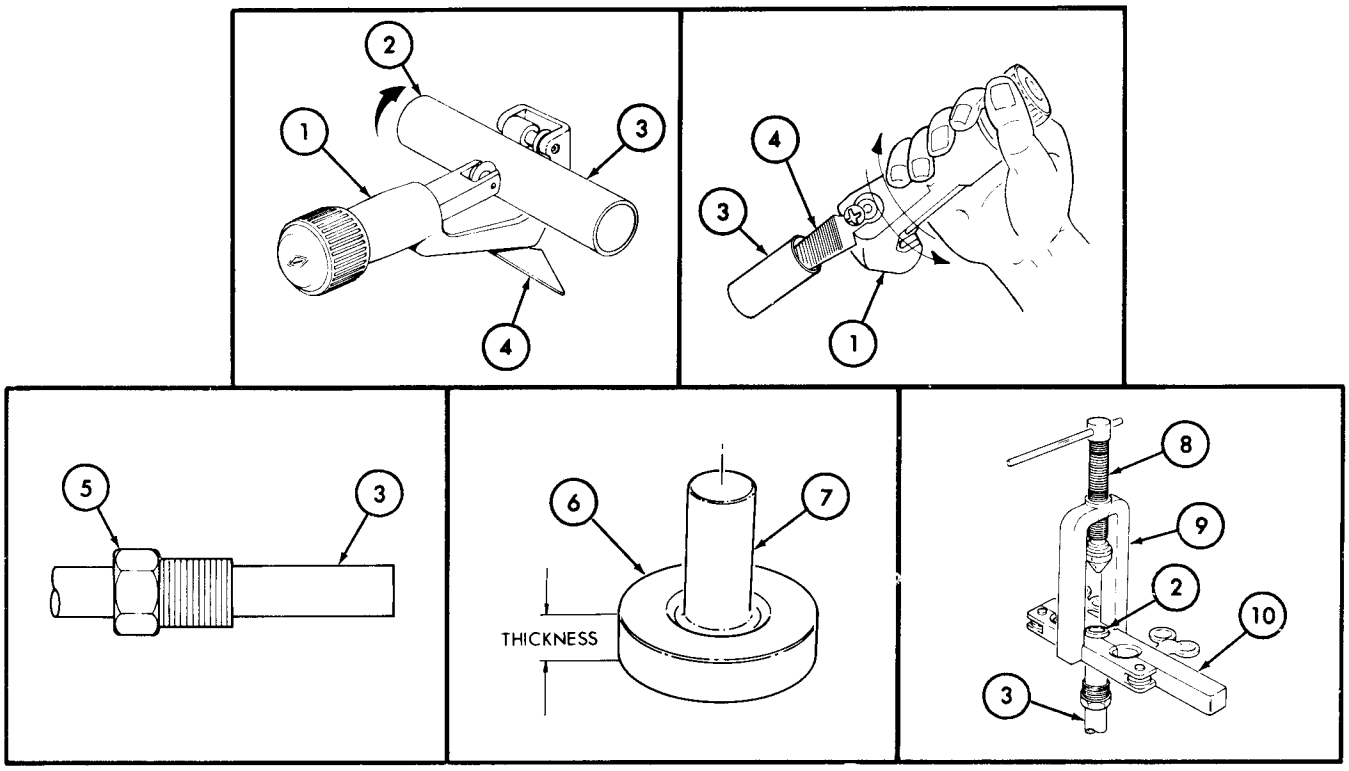

TA 156081

12-8. Brake Line Fabrication (Cont'd)

STEP NO.	LOCATION	ITEM	ACTION	REMARKS
	b. BENDING			
		CAUTION		
		Never bend tubing at any one point more than 45° Tubing could crack.		
7.		Tube bender (2) and tubing (1)	*a.* Position area where tubing (1) is to be bent at center of tube bender (2).	
			b. With both hands at tube bender (2) center, carefully slide hands apart while bending tubing (1).	
			c. Repeat step 7*b* until bend is complete.	

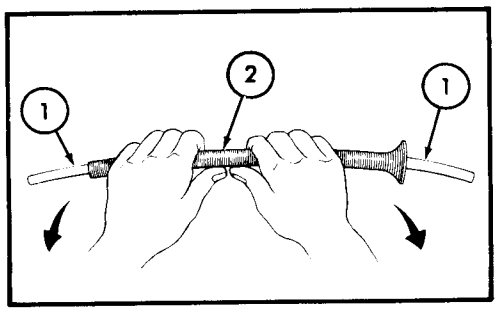

END OF TASK!

TA 156082

CHAPTER 13

FLYWHEEL HOUSING ASSEMBLY MAINTENANCE

13-1. Overview

a. This chapter provides maintenance instructions and information about wear, fit, and replacement parts. The flywheel assembly and related information are covered in the following sections:

b. Section II is preceded by a list of procedures covered within that section and provides a paragraph and page number leading you to each task.

Section I. DESCRIPTION

13-2. General

This section provides description information for the flywheel housing assembly.

13-3. Description — Flywheel Housing Assembly

The flywheel housing assembly attaches between the engine and the transmission, protects the clutch from environmental elements, and provides a place to attach the transmission/transfer to the engine. The flywheel housing is shown assembled and each major component is identified as follows:

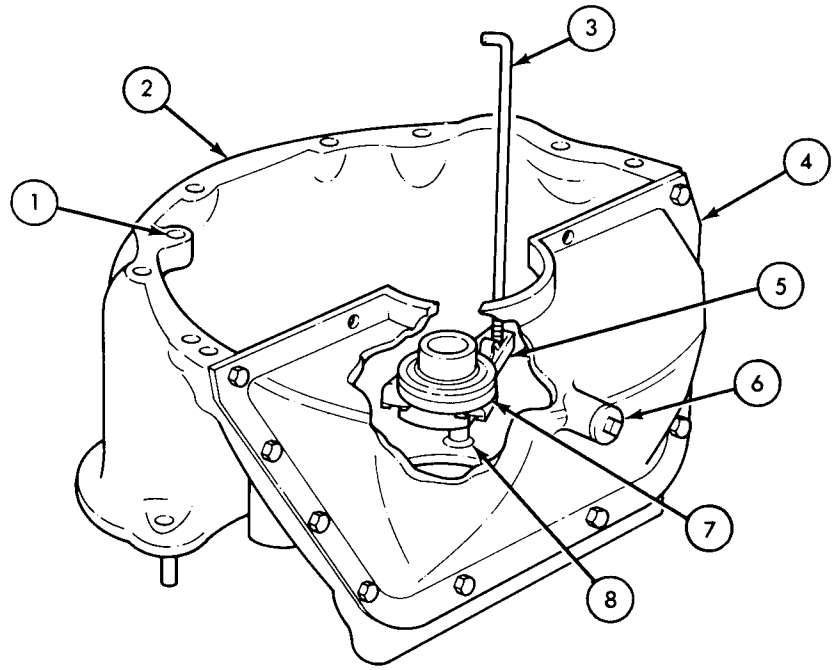

1. Starter motor shaft bushing
2. Flywheel housing
3. Clutch release rod
4. Flywheel housing cover
5. Clutch release lever
6. Pipe plug
7. Clutch release bearing and hub
8. Trunnion

TA 156083

Section II. FLYWHEEL HOUSING ASSEMBLY MAINTENANCE

13-4. General

This section provides maintenance assigned to the direct and general support levels for the flywheel housing assembly and components. To find a specific procedure, see the maintenance task summary below:

13-5. Flywheel Housing Assembly Maintenance Task Summary

TASK PARA	PROCEDURES	PAGE NO.
13-6.	Flywheel Housing Assembly a. Removal b. Disassembly c. Inspection and Repair d. Reassembly e. Installation	13-3

13-6. Flywheel Housing Assembly Maintenance

This task covers:

a. Removal
b. Disassembly
c. Inspection and Repair
d. Reassembly
e. Installation

INITIAL SETUP:

Applicable Models
All

Equipment Condition

Reference	Condition Description
TM 9-2320-218-20-1-2	Starter assembly removed from power plant.
Para 2-12	Transmission and transfer removed from power plant.

Test Equipment
None

Special Tools
Arbor press

Special Environmental Conditions
None

Materials/Parts
Two gaskets
One rubber seal
Compound sealant (NSN 8030-00-159-8176)
Ten housing cover lockwashers
Two capscrew assembled lockwashers
Seven housing to engine lockwashers

Personnel Required
One mechanic

General Safety Instructions
None

Manual References
TM 9-2320-218-20-1-1
TM 9-2320-218-34P
TM 9-214

STEP NO.	LOCATION	ITEM	ACTION	REMARKS
a. REMOVAL				
1.	Clutch release rod (3) at engine (2)	Boot (1)	Slide off.	

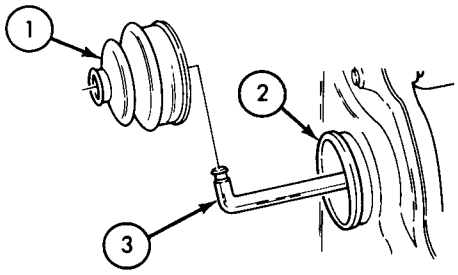

TA 156084

13-6. Flywheel Housing Assembly Maintenance (Cont'd)

STEP NO.	LOCATION	ITEM	ACTION	REMARKS
		NOTE		
		Do not perform steps 2 through 7 if engine replacement procedure has been performed.		
2.	Top of flywheel housing (2)	Power plant ground bolt (3)	Remove.	
3.	Flywheel housing cover (6)	Pipe plug (8)	*a.* Remove if not in storage boss (7).	
			b. Drain any liquid.	Use drain pan.
4.	Flywheel housing cover (6) to flywheel housing (2)	Ten slotted-head screws (10), lockwashers (9), and two capscrew assembled lockwashers (11)	Remove.	Discard lockwashers (9) and capscrew assembled washers (11).
5.		Flywheel housing cover (6), gasket (12), and seal (13)	Remove from flywheel housing (2).	Discard gasket (12) and seal (13).
6.	Flywheel housing (2) to to engine (1)	Seven capscrews (5) and lockwashers (4)	Remove.	Discard lockwashers (4).
7.		Flywheel housing (2) and gasket (14)	Remove from engine (1).	Discard gasket (14).

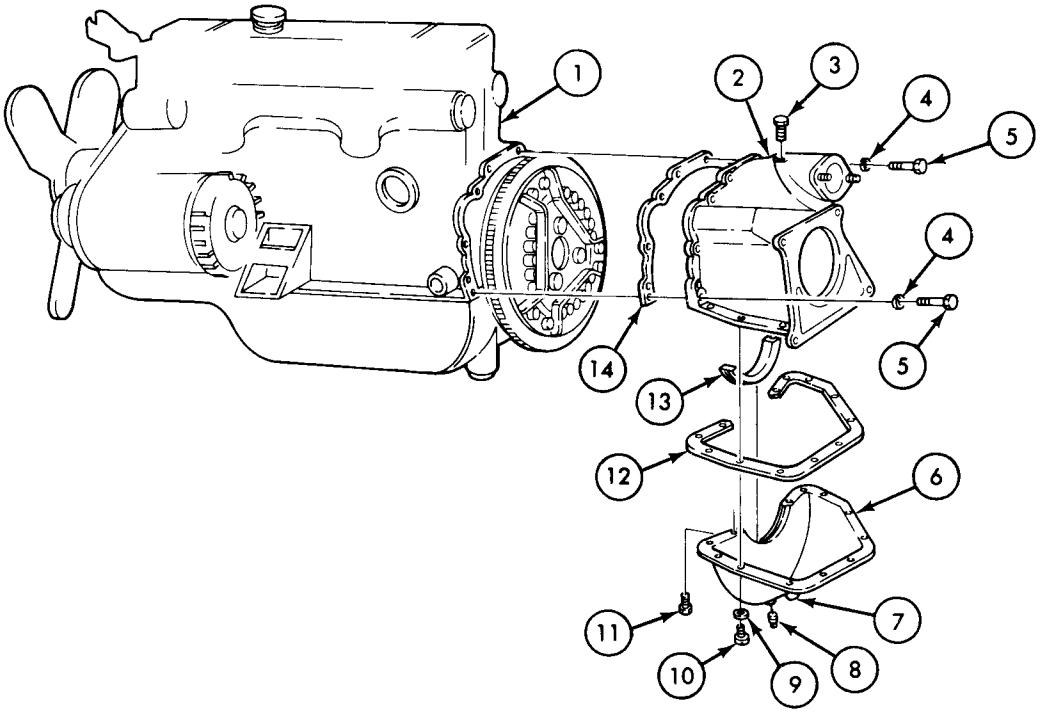

TA 156085

13-6. Flywheel Housing Assembly Maintenance (Cont'd)

STEP NO.	LOCATION	ITEM	ACTION	REMARKS
b. DISASSEMBLY				
8.		Clutch release lever assembly (16)	Tilt clutch release rod (15) toward center of flywheel housing (2), and slide lever assembly (16) off of trunnion ball (17).	
9.		Clutch release bearing (18)	Slide off of clutch release lever assembly (16).	
10.	Clutch release lever assembly (16)	Clutch release rod (15)	Back off until threaded end is flush with bottom of adjusting nut (20).	
11.		Adjusting nut (20)	*a.* Pry from under yoke spring (19) on clutch release lever assembly (16). *b.* Remove from clutch release rod (15). *c.* Unscrew from release rod (15).	

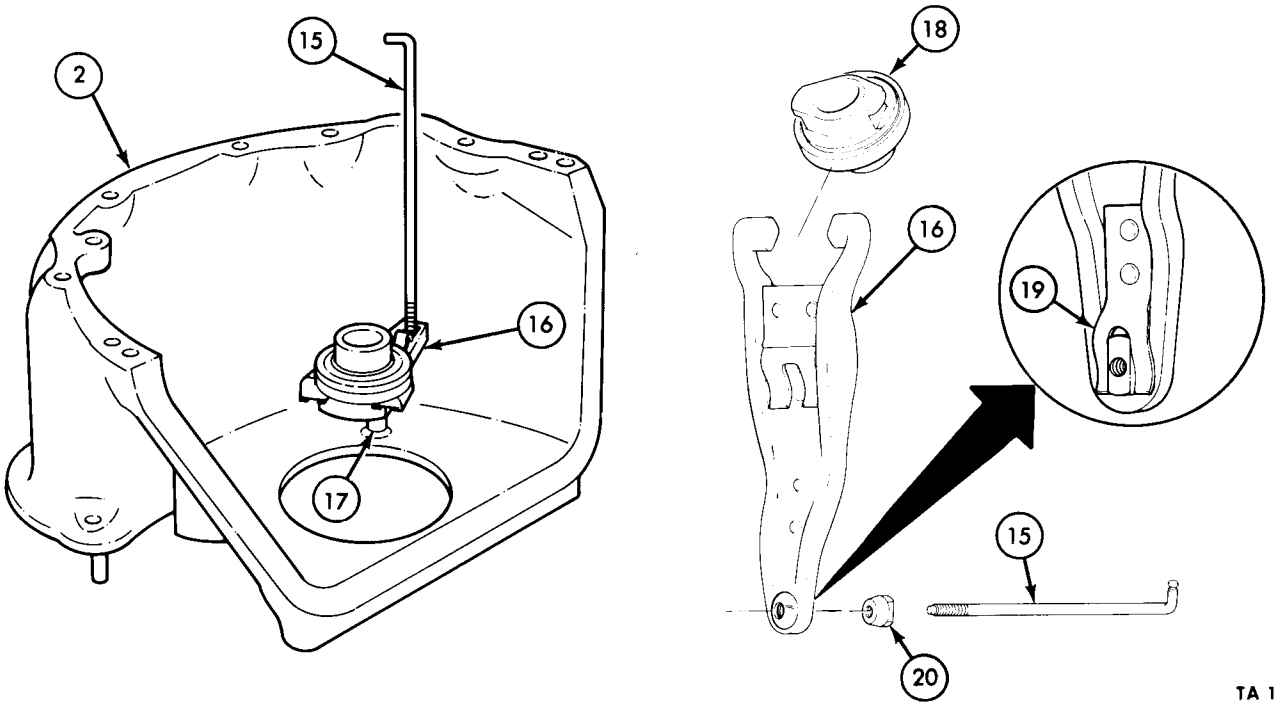

TA 156086

13-6. Flywheel Housing Assembly Maintenance (Cont'd)

STEP NO.	LOCATION	ITEM	ACTION	REMARKS
12.		Clutch release bearing hub (1)	Press out of bearing (2).	Use arbor press.
13.		Starter motor shaft bushing (3)	Drive out of flywheel housing forward mounting flange (4).	Use a long drift, an adapter against bushing (3), and hammer. Use care not to damage housing.

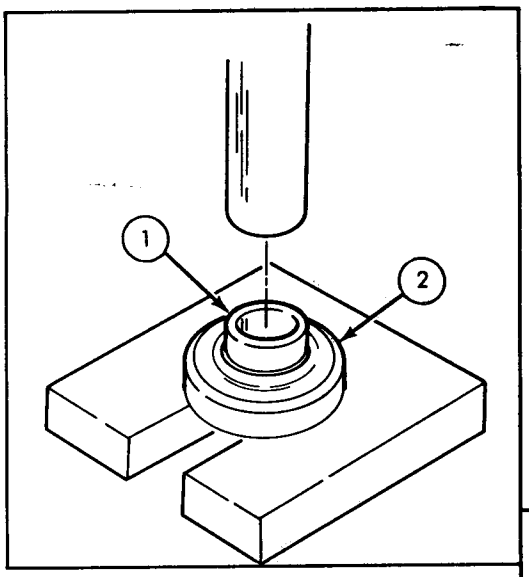

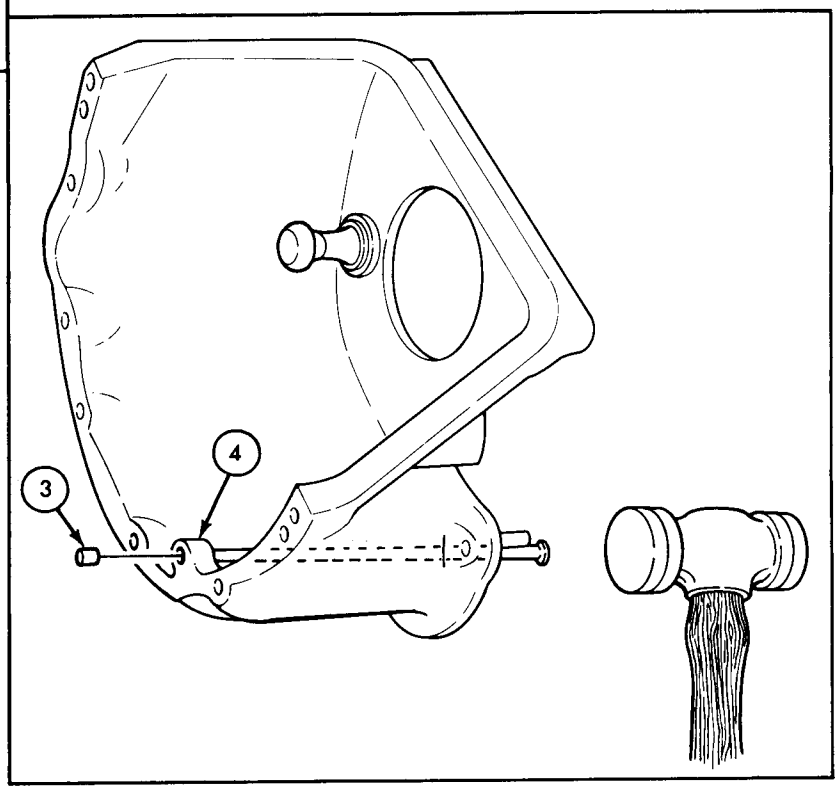

TA 156087

13-6. Flywheel Housing Assembly Maintenance (Cont'd)

STEP NO.	LOCATION	ITEM	ACTION	REMARKS
		c. INSPECTION AND REPAIR		
14.		Clutch release lever assembly (6)	*a.* Inspect for cracks and bends.	If cracked or bent, replace assembly (6).
			b. Inspect fingers at yoke end of lever (5) for wear.	If worn, replace assembly (6).
			c. Inspect springs for bends and breaks.	If bent or broken, replace assembly (6).
15.		Clutch release rod (8)	Inspect for bends,broken flange (7), and damaged threads.	If bent, straighten. If flange (7) is broken, replace. If threads are defective, rethread.
16.		Clutch release bearing (2) and hub (1)	Inspect for score marks, pits, chips, and wear.	See TM 9-214 for care and maintenance of bearings.
17.		Adjusting nut (9)	Inspect for scores and damaged threads.	If scored or threads damaged, replace.

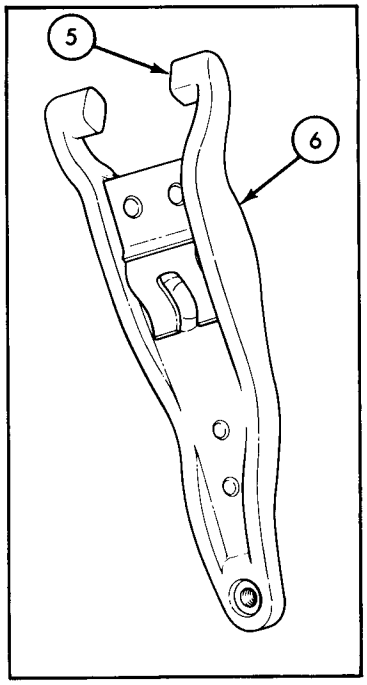

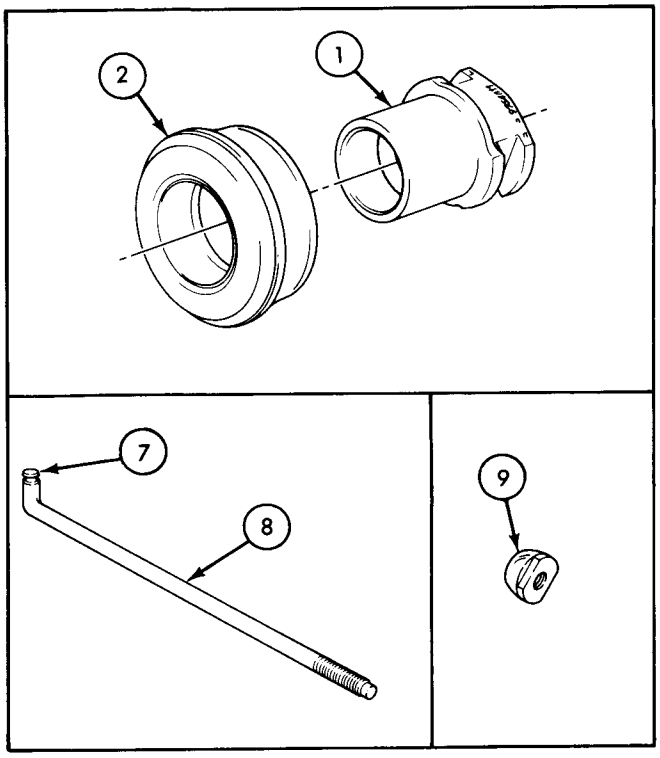

TA 156088

13-6. Flywheel Housing Assembly Maintenance (Cont'd)

STEP NO.	LOCATION	ITEM	ACTION	REMARKS
18.		Flywheel housing (1)	*a.* Inspect for cracks and breaks.	If cracked or broken, replace.
			b. Inspect trunnion (3) for cracks, breaks, and scores.	If cracked, broken, or scored, replace housing (1).
			c. Inspect alinement holes (2) for wear.	If worn, replace housing (1) (see table 13-1 for wear limits).
			d. Inspect threaded holes (5) for damage.	If threads are damaged, rethread.
			e. Inspect starter mounting stud (4) threads for damage.	If damaged, replace studs (4).
19.		Starter motor shaft bushing (6)	Inspect for wear.	If worn, replace (see table 13-1 for wear limits).
20.		Power plant ground bolt (7)	Inspect threads for damage.	If threads are damaged, replace.

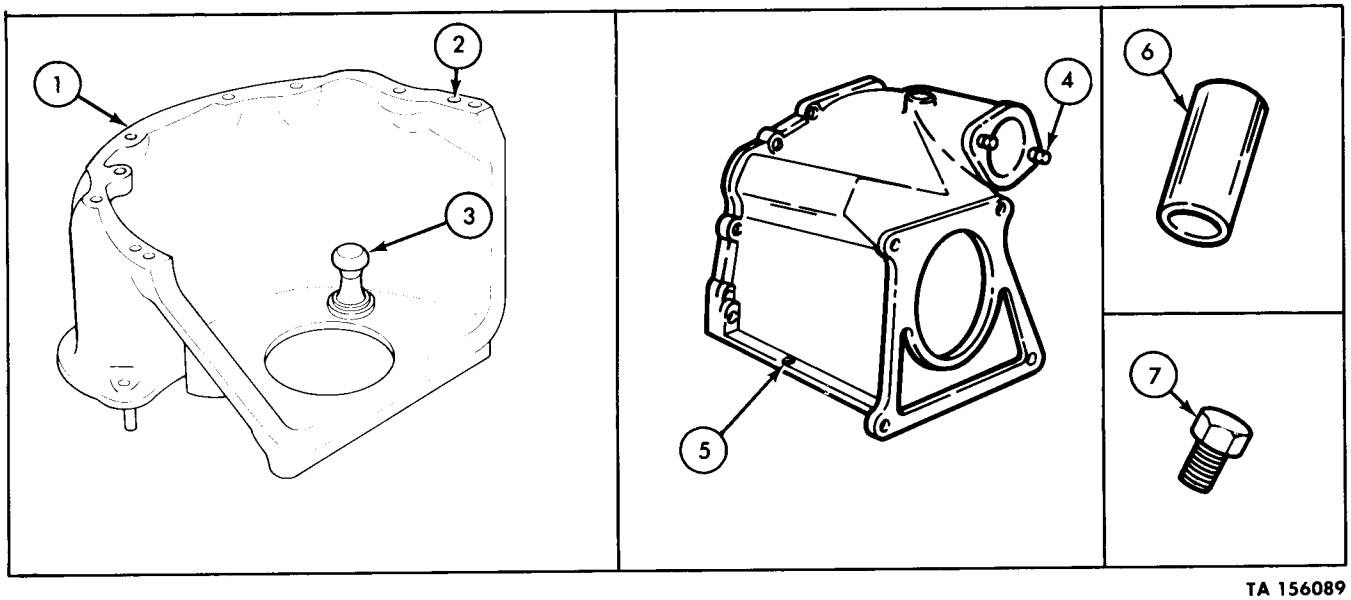

TA 156089

13-6. Flywheel Housing Assembly Maintenance (Cont'd)

STEP NO.	LOCATION	ITEM	ACTION	REMARKS
d. REASSEMBLY				
21.		Starter motor shaft bushing (6)	Press into flywheel housing forward mounting flange (8).	Use arbor press. Use care not to damage bushing (6) or housing (1).
22.		Clutch release bearing (9)	Press into bearing hub (10).	Use arbor press.

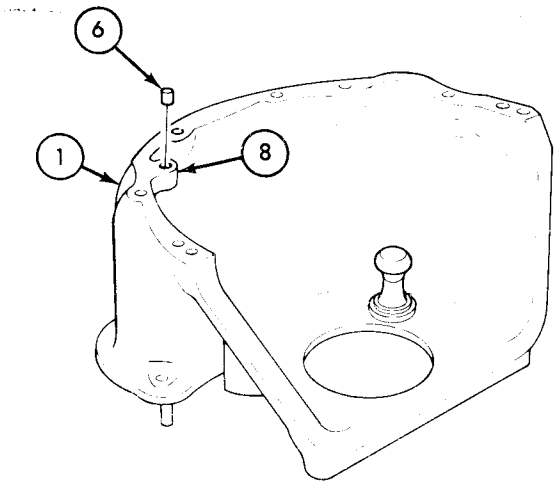

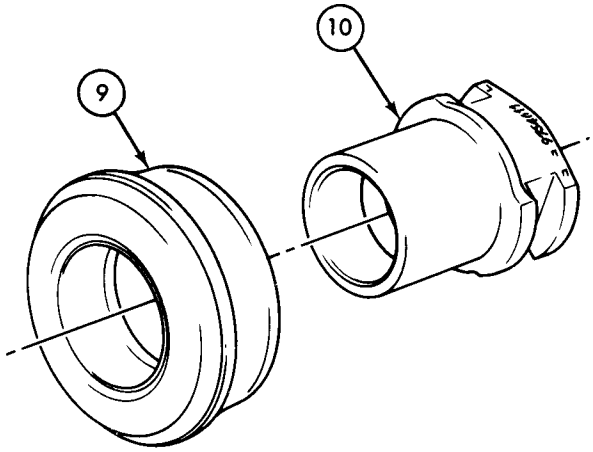

TA 156090

13-6. Flywheel Housing Assembly Maintenance (Cont'd)

STEP NO.	LOCATION	ITEM	ACTION	REMARKS
23.		Clutch release rod (5)	Screw into adjusting nut (6) until flush with bottom of nut (6).	
24.		Adjusting nut (6)	Slide under clutch release lever assembly yoke spring (4).	
25.		Clutch release bearing (1) and hub (2)	Slide onto clutch release lever assembly (3) and hold in place.	
26.		Clutch release lever assembly (3)	Pry trunnion spring (7) down and slide toward corner of flywheel housing (9) until trunnion ball (8) seats.	

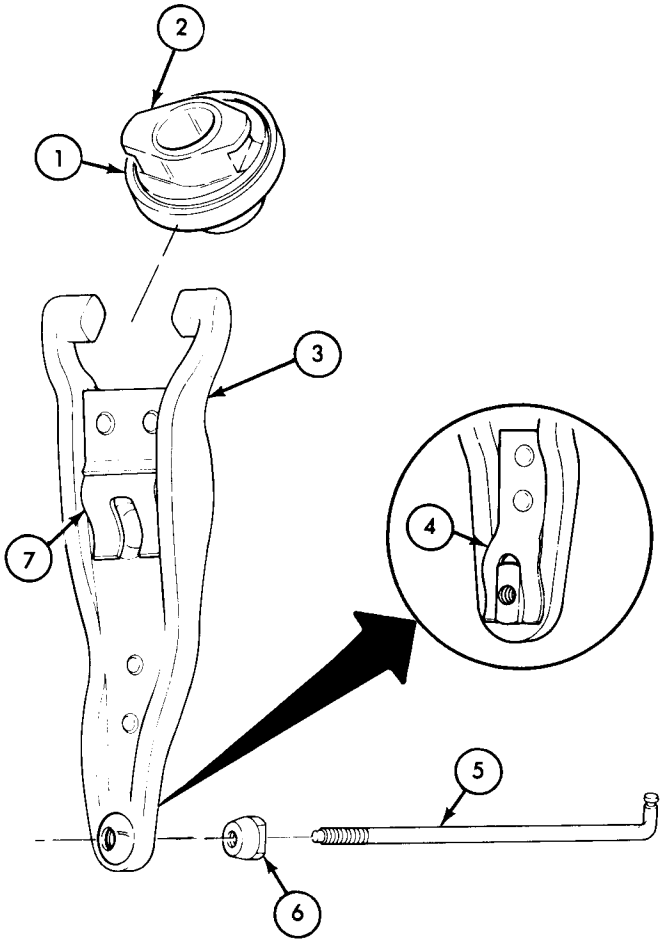

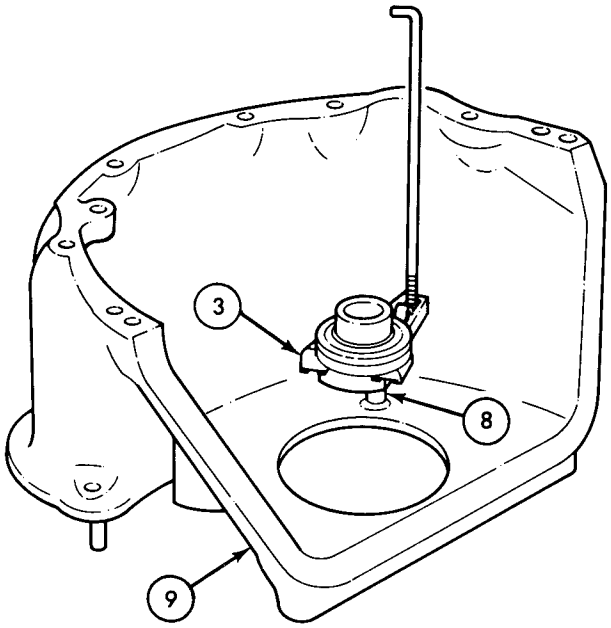

TA 156091

13-6. Flywheel Housing Assembly Maintenance (Cont'd)

STEP NO.	LOCATION	ITEM	ACTION	REMARKS
e. INSTALLATION				
		NOTE		
		Do not perform step 27 through 31 if engine replacement procedure has been performed.		
27.		New gasket (11) and flywheel housing (9)	Secure to engine (10) with seven new lockwashers (13), five short capscrews (14), and two long capscrews (15).	Two long capscrews (15) go in bottom left and right holes. Tighten 20-25 lb-ft (27-34 N•m).
28.		New seal (23)	Apply sealant compound and place on underside of engine (10) in front of flywheel (24).	
29.		Pipe plug (19)	Install in housing cover storage boss (18) if not already in place.	
30.		New gasket (16) and flywheel housing cover (17)	Secure to bottom of flywheel housing (9) with two new capscrew assembled lockwashers (22), ten new lockwashers (20), and slotted-head screws (21).	Tighten two capscrew assembled lockwashers (22) 5-13 lb-ft (6.8-17.6 N•m) and slotted-head screws (21) 3-7 lb-ft (4.1-9.5 N•m).
31.		Power plant ground bolt (12)	Install in top of flywheel housing (9).	

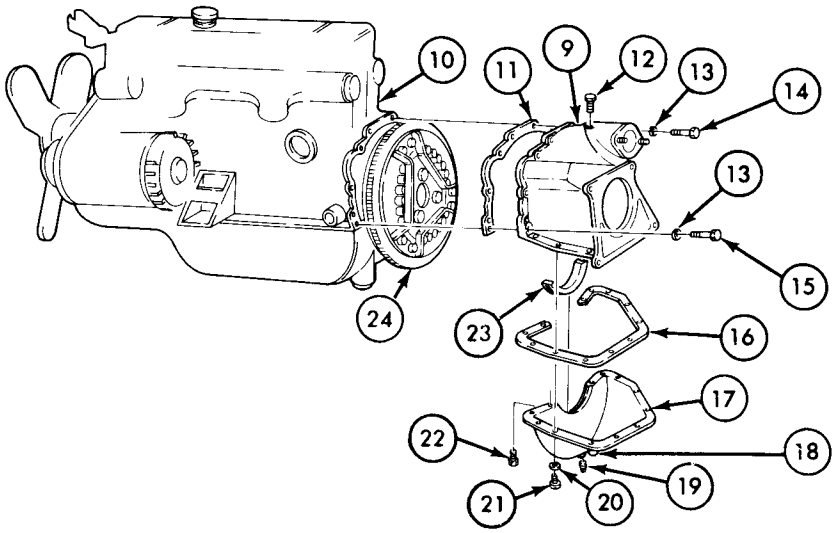

TA 156092

13-6. Flywheel Housing Assembly Maintenance (Cont'd)

STEP NO.	LOCATION	ITEM	ACTION	REMARKS
32.		Boot (1)	Slide onto clutch release rod (2) and seat onto engine (3).	

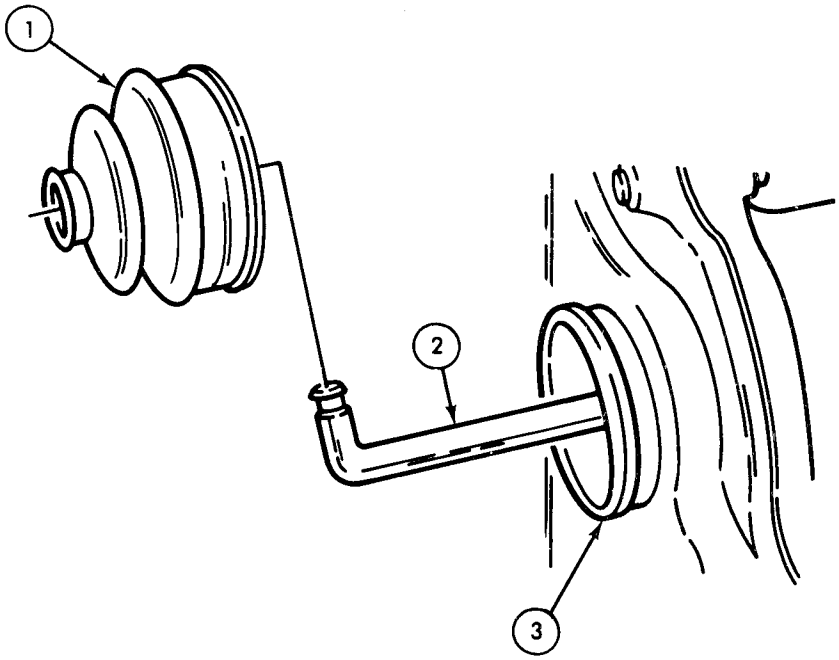

END OF TASK!

FOLLOW-ON TASKS:
- Install starter assembly (TM 9-2320-218-20-1).
- Install transmission and transfer (para 2-12).

TA 156093

Section III. REPAIR AND REPLACEMENT STANDARDS

13-7. General

This section provides repair and replacement standards pertaining to direct and general support for the flywheel housing assembly. The repair and replacement standards included herein give minimum, maximum and key clearance of new or repaired parts. An asterisk (*) in the "wear limit" column indicates that a part should be replaced when worn beyond dimensions given in "size and fit of new parts" column. In "size and fit of new parts" column, the letter "L" indicates a loose fit (clearance) and the letter "T" indicates a tight fit (interference).

13-8. Repair and Replacement Standards — Flywheel Housing Assembly

The components covered by the repair and replacement standard listed in table 13-1 are illustrated below. To find the component and its tolerance requirements, match the reference number listed to the extreme left in table 13-1.

Table 13-1. Repair and Replacement Standards — Flywheel Housing Assembly

Ref. No.	Point of Measurement	Size and Fit of New Parts	Wear Limits
1.	Flywheel housing alinement holes inside diameter		0.3727 in. (9.446 mm)
2.	Starter motor shaft bushing inside diameter	0.629-0.630 in. (15.976-16.002 mm)	

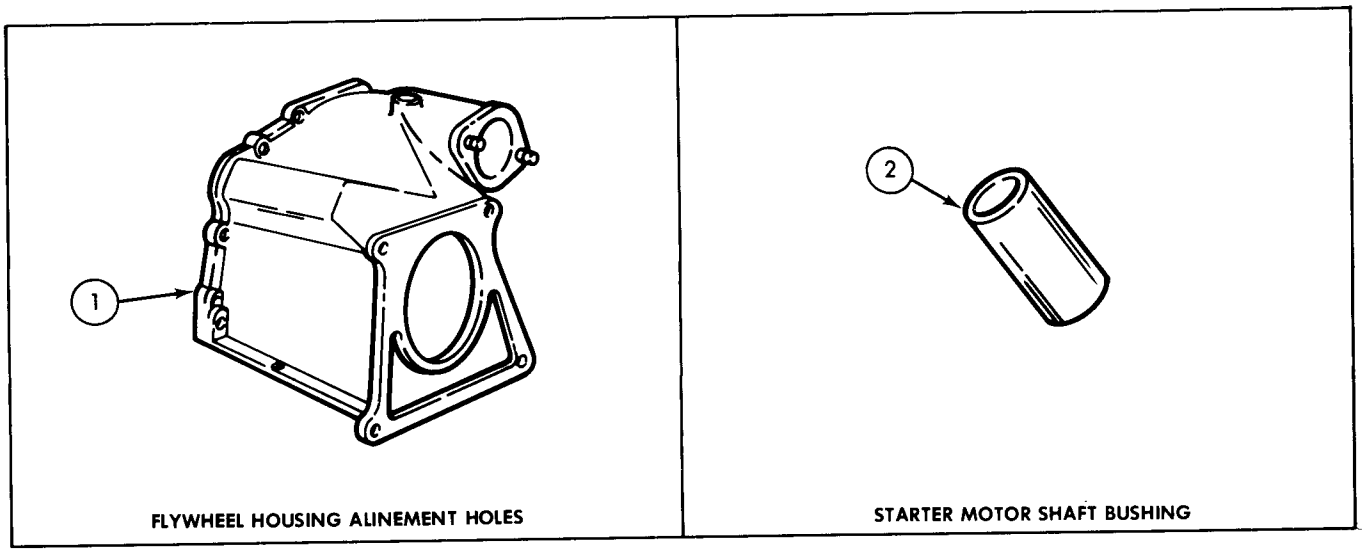

FLYWHEEL HOUSING ALINEMENT HOLES

STARTER MOTOR SHAFT BUSHING

TA 156094

CHAPTER 14

STEERING GEAR AND COLUMN MAINTENANCE

14-1. Overview

a. This chapter provides maintenance of the steering system assigned to direct support and general support levels. Each procedure and related information is covered in one of the following sections:

b. Section II is preceded by a list of procedures covered within that section and provides a paragraph and page number leading you to the task.

Section I. DESCRIPTION

14-2. General

This section provides steering gear and column description for direct support and general support levels.

14-3. Description-Steering Gear and Column

The steering gear is a conventional worm and sector type, with threaded adjustment and shim stock used to control end play. The steering gear and column are joined together with the aid of a flange and insulator assembly which allows for easier and faster field servicing.

14-3. Description-Steering Gear and Column (Cont'd)

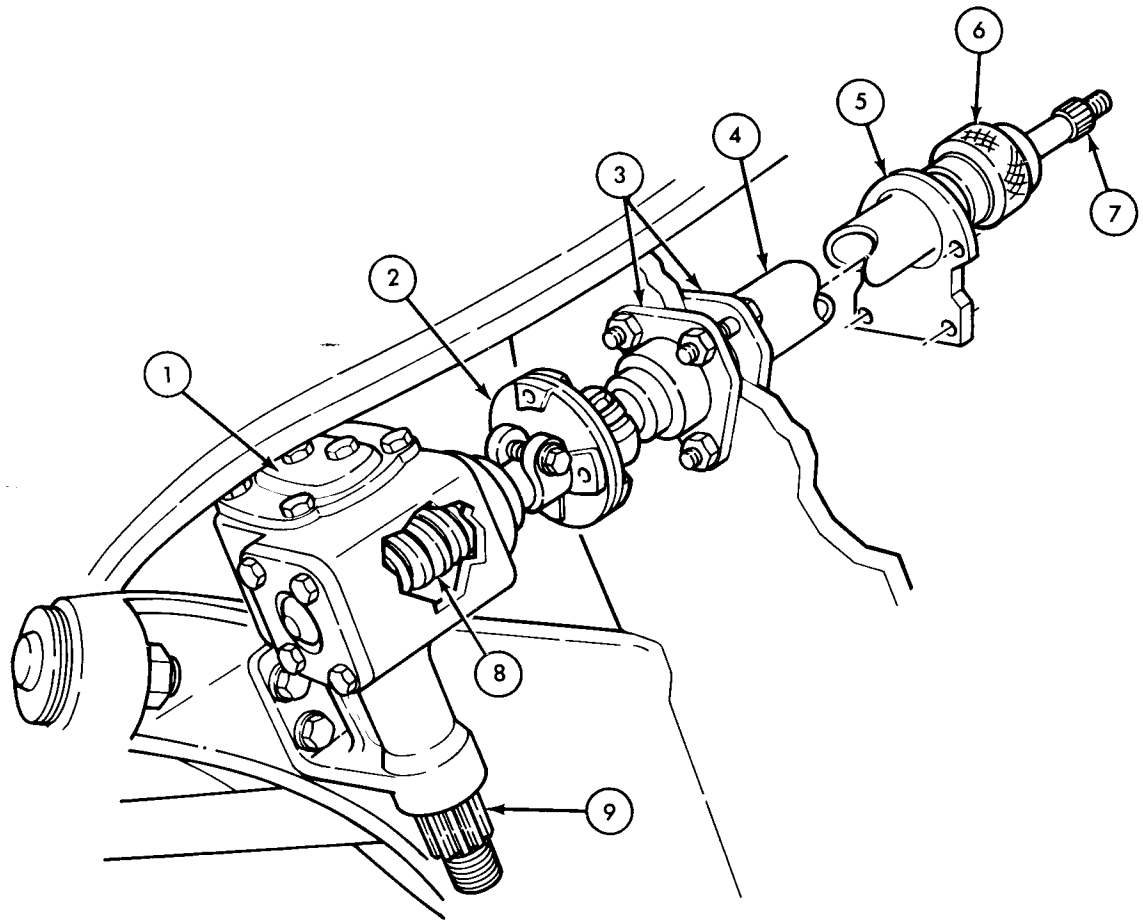

1. Steering gear assembly
2. Flange and insulator assembly
3. Upper and lower steering column retainers
4. Steering column tube
5. Upper steering column bracket
6. Steering column tube cap
7. Steering column
8. Worm wheel
9. Sector shaft gear

TA 156150

Section II. STEERING GEAR AND COLUMN MAINTENANCE

14-4. General

This section provides maintenance procedures for both steering gear and steering column. To locate a specific procedure, see the maintenance task summary below:

14-5. Steering Gear and Steering Column Maintenance Task Summary

TASK PARA	PROCEDURES	PAGE NO.
14-6.	Steering Column a. Removal b. Disassembly c. Cleaning and Inspection d. Assembly e. Installation	14-4
14-7.	Steering Gear a. Removal b. Disassembly c. Cleaning and Inspection d. Assembly e. Installation	14-11
14-8.	Steering Gear Adjustment a. Worm Wheel Preload Adjustment b. Worm Wheel and Shaft Gear Adjustment	14-24

14-6. Steering Column Maintenance

This task covers:

a. Removal
b. Disassembly
c. Cleaning and Inspection
d. Assembly
e. Installation

INITIAL SETUP:

Applicable Models
All

Equipment Condition Reference	Condition Description
TM 9-2320-218-20-1-1	Horn switch removed.
TM 9-2320-218-20-1-2	Steering wheel removed.

Test Equipment
None

Special Tools
Torque wrench (0-175 lb-ft)
Arbor press
Snapring pliers
Safety goggles

Special Environmental Conditions
Work area well ventilated.

Materials/Parts
Sleeve bushing
Drycleaning solvent
GAA grease
Upper column bracket
Four screw-assembled lockwashers
Three steering column retainer locknuts

Personnel Required
One mechanic

General Safety Instructions
- Always wear safety goggles when using compressed air.
- Keep fire extinguisher nearby when using drycleaning solvent.

Manual References
TM 9-2320-218-20-1
TM 9-2320-218-34P

STEP NO.	LOCATION	ITEM	ACTION	REMARKS
		NOTE		
		Scribe a mark on flange and insulator assembly, and on steering gear and column shafts, so they can be properly matched at reassembly.		
	a. REMOVAL			
1.	Flange and insulator assembly (1)	Upper flange bolt (2)	Loosen.	

14-6. Steering Column Maintenance (Cont'd)

STEP NO.	LOCATION	ITEM	ACTION	REMARKS
2.	Upper (4) and lower (6) steering column retainers to toeboard (3)	Three locknuts (8), washers (7), and capscrews (5)	Remove.	Discard locknuts (8).
3.	Hot water heater diverter (9) to steering column (10)	Two clamps (15)	Remove.	Diverter (9) will remain in place.
4.	Directional signal switch (12) to steering column (10)	Clamp (11) and cable retaining clip (14)	Remove and allow switch (12) to rest on floor (13).	

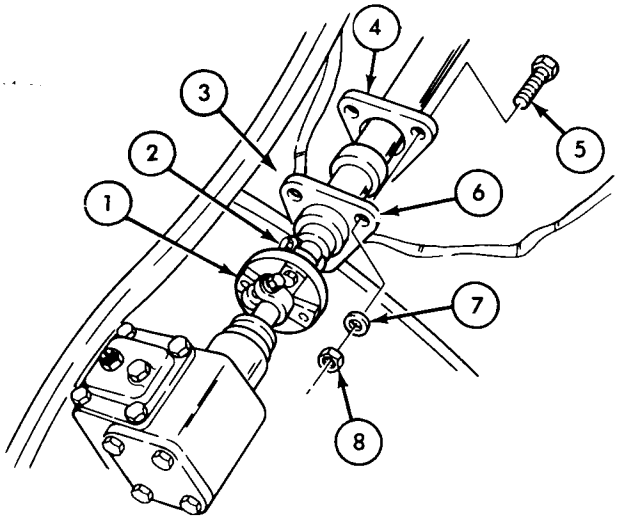

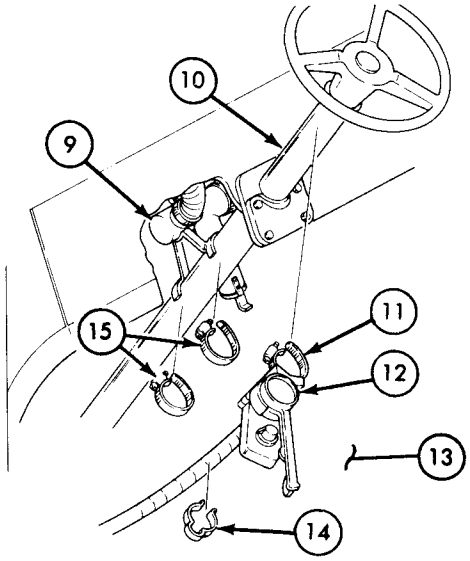

NOTE

Step 5 is required for clamping bolt type steering column bracket only.

5.	Upper steering column bracket (16)	Screw-assembled washer (18)	Loosen.	
6.	Upper steering column bracket (16) or (20) to dash panel (19)	Four screw-assembled lockwashers (17)	Remove.	Discard screw-assembled lockwashers (17).

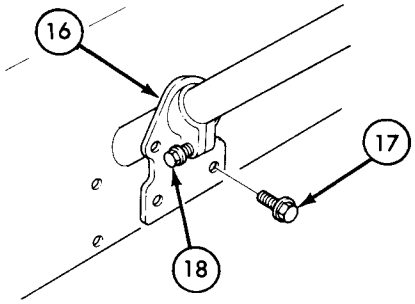

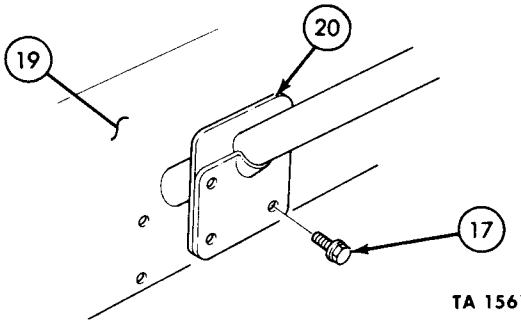

TA 156151

14-6. Steering Column Maintenance (Cont'd)

STEP NO.	LOCATION	ITEM	ACTION	REMARKS
7.		Steering column (1)	Pull up and out to remove from vehicle.	Upper (5) and lower (3) steering column retainer, rubber grommet (4), and column bracket (2), will slide off steering column (1) when column is removed.

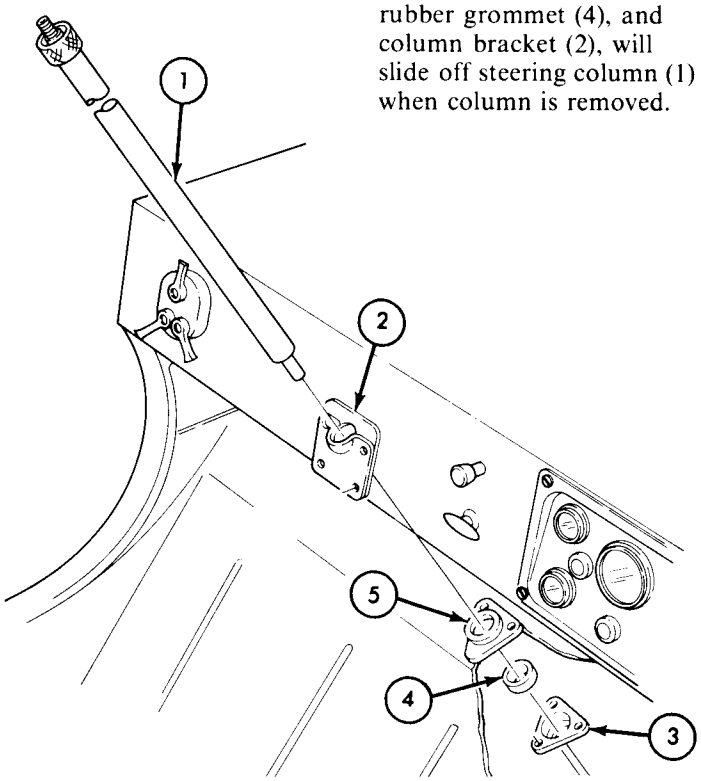

b. DISASSEMBLY

8.	Upper steering column tube (7)	Tube cap (11)	Remove.	
9.	Steering column tube (7)	Steering column shaft (8)	Remove.	
10.	Lower steering column tube (7)	Sleeve bushing (6)	Press out.	Use arbor press. Discard sleeve bushing (6).
11.	Steering shaft (8)	Two snaprings (9)	Remove.	Use snapring pliers.
12.		Shaft bearing (10)	Press off shaft (8).	Use arbor press.

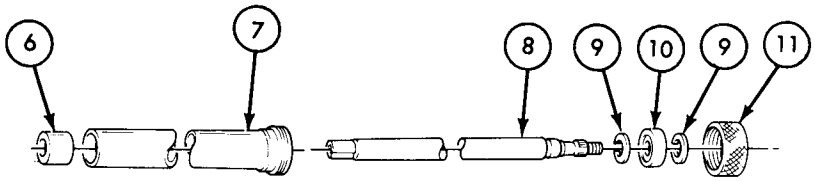

TA 156152

14-6. Steering Column Maintenance (Cont'd)

STEP NO.	LOCATION	ITEM	ACTION	REMARKS
	c. CLEANING AND INSPECTION			

WARNING

- Drycleaning solvent is flammable and will not be used near an open flame. A fire extinguisher will be kept nearby when the solvent is used. Use only in well-ventilated places. Failure to do this may result in injury to personnel and/or damage to equipment.
- Compressed air source will not exceed 30 psi. When cleaning with compressed air, eyeshields must be worn. Failure to wear eyeshields may result in injury to the eyes.

13.		All metal steering column components	*a.* Clean in drycleaning solvent. *b.* Rinse in warm water. *c.* Blow dry with compressed air. *d.* Clean gasket surfaces of all old gasket material. *e.* Make sure all splines and threads are free of paint.	
14.		Shaft bearing (10)	Inspect for scores, wear, and resistance to movement.	Replace if scored, worn, or does not move freely.
15.		All steering column metal components	Inspect for cracks, breaks, dents, bends, stripped threads, chips, and wear.	Replace if cracked, broken, dented, bent, threads stripped, splines chipped, or worn.

14-6. Steering Column Maintenance (Cont'd)

STEP NO.	LOCATION	ITEM	ACTION	REMARKS
d. ASSEMBLY				
16.		Lower snapring (4)	Install on steering column shaft (3).	Use snapring pliers.
		NOTE		
		Lubricate inner surface of shaft bearing (5) with GAA grease before installing.		
17.		Shaft bearing (5)	Press onto steering column shaft (3).	
18.		Upper snapring (6)	Install on steering column shaft (3).	Use snapring pliers.
19.		New sleeve bushing (1)	Press into lower steering column tube (2).	Do not lubricate.
20.		Steering column shaft (3)	Install into steering column tube (2) from upper end.	
21.		Tube cap (7)	Install on upper steer-column tube (2).	Finger tighten only.

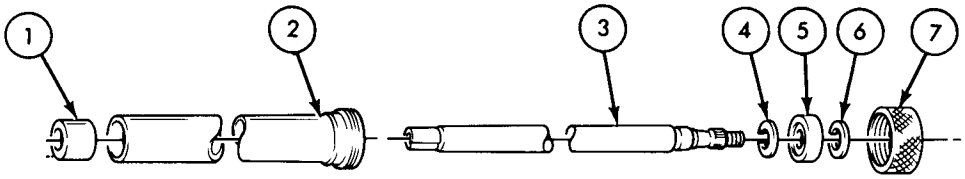

e. INSTALLATION				
22.		Upper (9) and lower (11) steering column retainers, and rubber grommet (10)	Secure to toeboard (15) with three capscrews (16), washers (14), and new locknuts (13).	Do not tighten.
23.		Upper steering column bracket (8)	Secure to dash panel (18) with four new screw-assembled washers (17).	Do not tighten.

TA 156153

14-6. Steering Column Maintenance (Cont'd)

STEP NO.	LOCATION	ITEM	ACTION	REMARKS
24.		Steering column assembly (2)	*a.* Lower through upper steering column bracket (8) and steering column retainers (9) and and (11). *b.* Aline column shaft (3) with mark on flange and insulator assembly (12) and engage.	
25.	Upper steering column bracket (8) to dash panel (18)	Four new screw-assembled lockwashers (17).	Tighten.	Tighten 11-17 lb-ft (15-23 N•m).

NOTE

Step 26 is required for clamping bolt type steering column bracket only.

26.	Upper steering column bracket (19)	Screw-assembled washer (20)	Tighten.	Tighten 11-17 lb-ft (15-23 N•m).

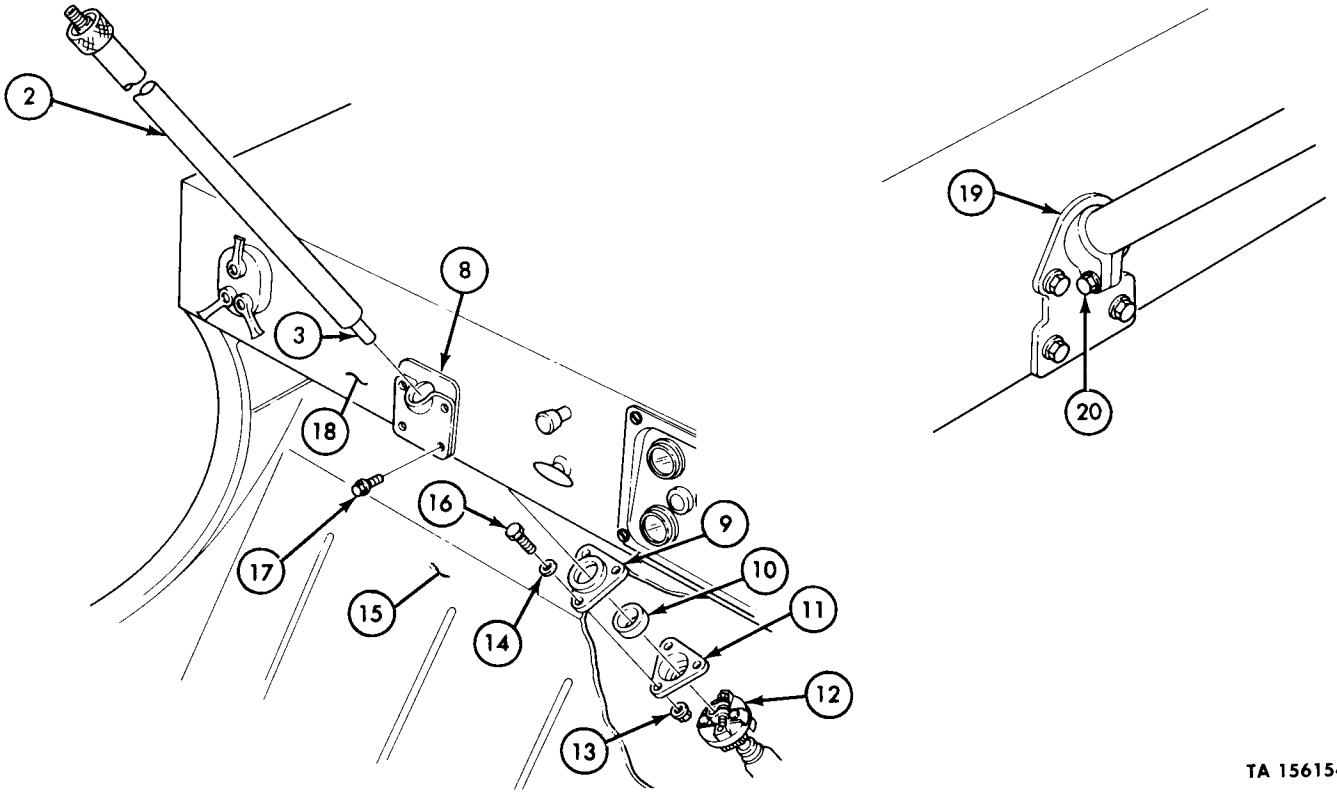

TA 156154

14-6. Steering Column Maintenance (Cont'd)

STEP NO.	LOCATION	ITEM	ACTION	REMARKS
27.	Flange and insulator assembly (1)	Upper flange bolt (2)	Tighten.	Tighten 26-34 lb-ft (35-46 N•m).
28.	Steering column retainers (6) to toeboard (7)	Three capscrews (3), washers (4), and new locknuts (5)	Tighten.	Tighten 11-17 lb-ft (15-23 N•m).
29.		Hot water heater diverter (8)	Secure to steering column (9) with two clamps (14).	Vehicles equipped with hot water heater kit only.
30.		Directional signal switch (11)	Secure to steering column (9) with clamp (10).	
31.		Directional signal cable (13)	Secure to steering column (9) with cable retaining clip (12).	

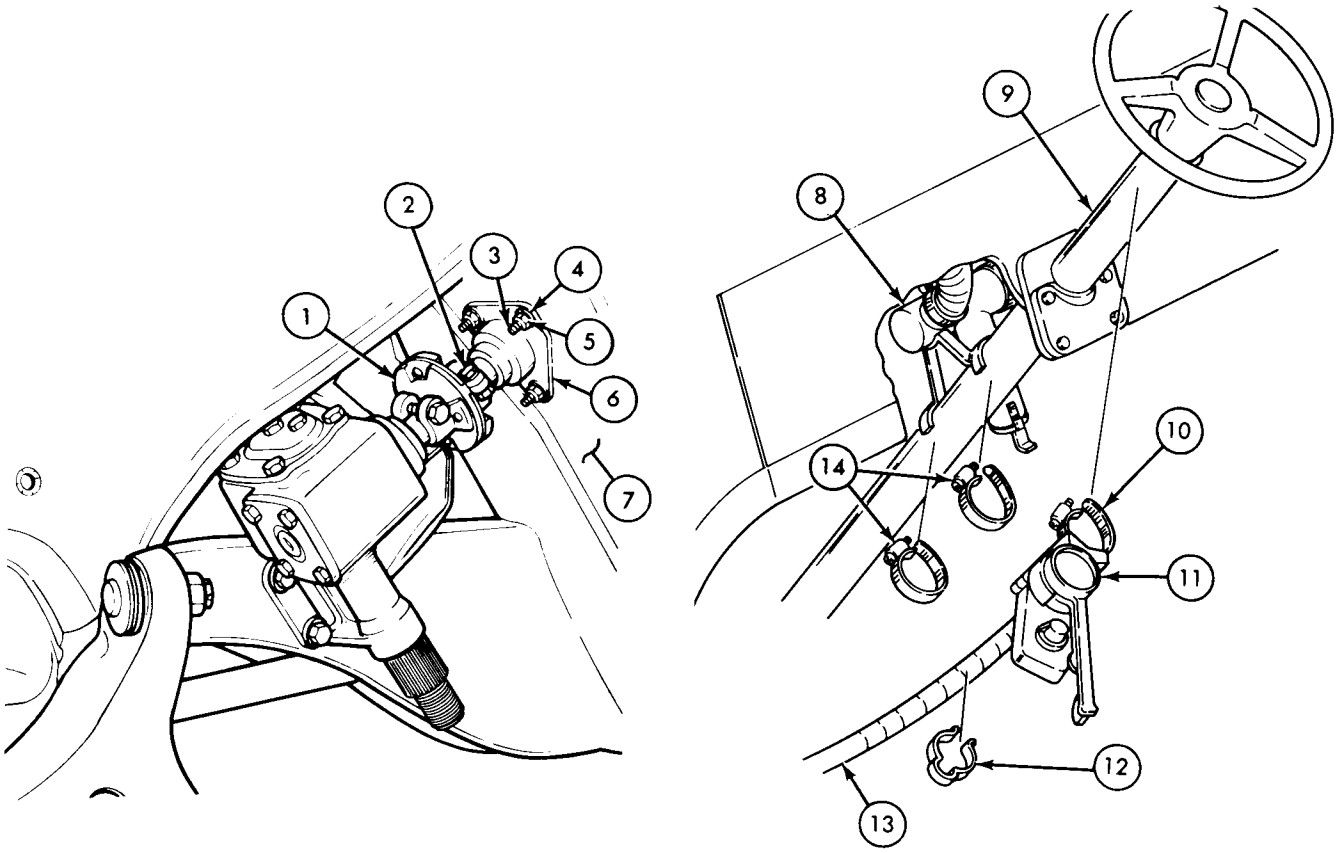

END OF TASK!

FOLLOW-ON TASKS:
- Install steering wheel (TM 9-2320-218-20-1-2).
- Install horn switch (TM 9-2320-218-20-1-1).

TA 156155

14-7. Steering Gear Maintenance

This task covers:

a. Removal
b. Disassembly
c. Cleaning and Inspection
d. Assembly
e. Installation

INITIAL SETUP:

Applicable Models
All

Equipment Condition Reference | **Condition Description**
TM 9-2320-218-20-1-2 | Left front wheel removed.

Test Equipment
None

Special Tools
Torque wrench (0-175 lb-ft)
Safety goggles
Arbor press

Special Environmental Conditions
Work area well ventilated.

Materials/Parts
Steering gear parts kit
Pitman arm lockwasher
Cable retainer clip lockwasher
Three steering gear locknuts
Housing cover gasket
Worm wheel seal
Sector shaft gear seal
Two sector shaft gear bearing sleeves
Drycleaning solvent
GAA grease

Personnel Required
One mechanic

General Safety Instructions
- Keep fire extinguisher nearby when using drycleaning solvent.
- Always wear safety goggles when using compressd air.

Manual References
TM 9-2320-218-20-1
TM 9-2320-218-34P
LO 9-2320-218-12

STEP NO.	LOCATION	ITEM	ACTION	REMARKS

NOTE

Do not disassemble steering gear unless steering gear parts kit is available.

14-7. Steering Gear Maintenance (Cont'd)

STEP NO.	LOCATION	ITEM	ACTION	REMARKS
	a. REMOVAL			
		NOTE		
		Scribe a mark on flange and insulator assembly, steering gear shaft and column shaft, so they can be properly matched at reassembly.		
1.	Left side engine compartment (1)	Circuit 25 connector (6)	Separate from horn switch cable (2).	
2.	Horn switch circuit 25 connector (6)	Terminal (3)	Push through rubber shell (4) until retaining washer (5) is exposed.	
3.		Retaining washer (5)	Remove from terminal (3).	
4.		Rubber shell (4)	Slide off horn switch cable (2).	

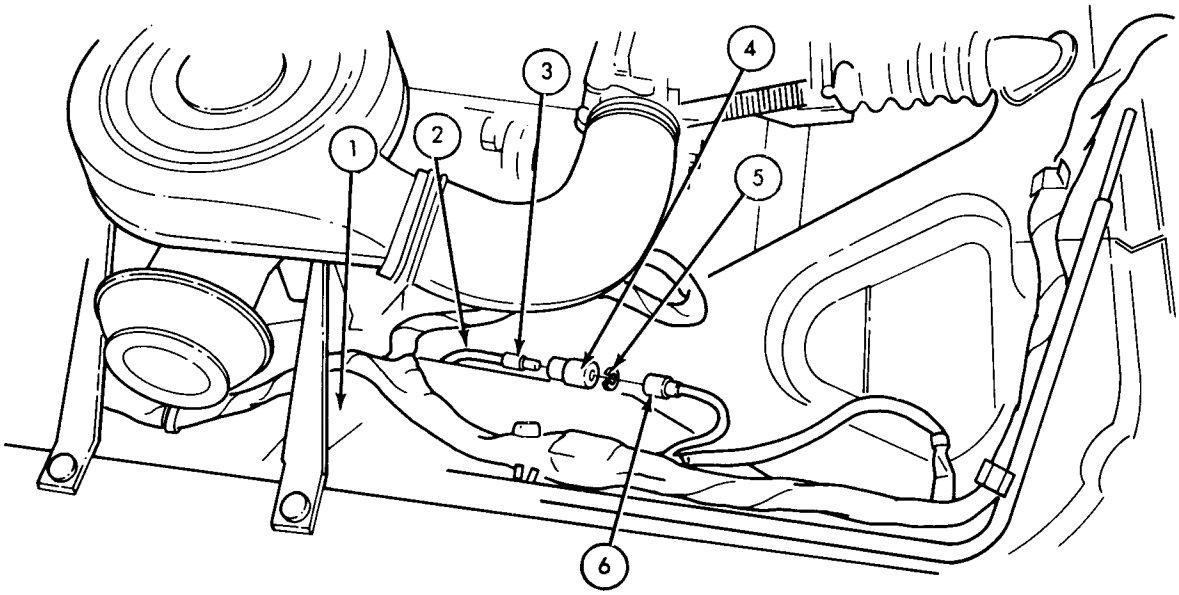

5.	Steering pitman arm (7) to steering gear shaft (8)	Nut (10) and lockwasher (9)	Remove.	Discard lockwasher (9).
6.		Steering pitman arm (7)	Remove from steering gear shaft (8).	Use puller (11).

TA 156156

14-7. Steering Gear Maintenance (Cont'd)

STEP NO.	LOCATION	ITEM	ACTION	REMARKS

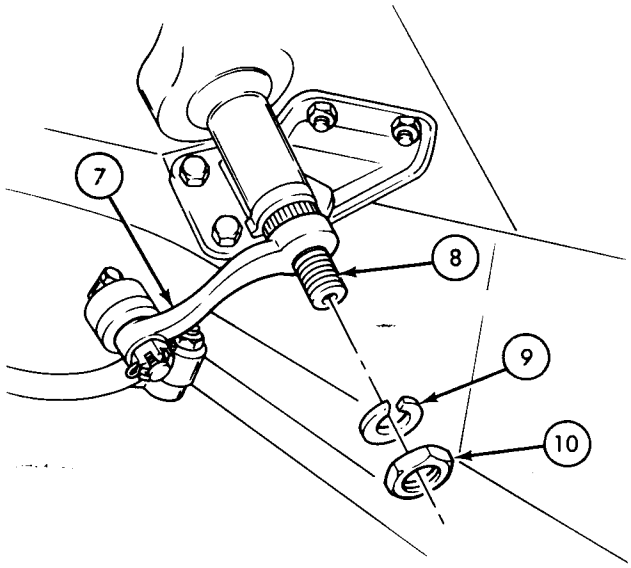

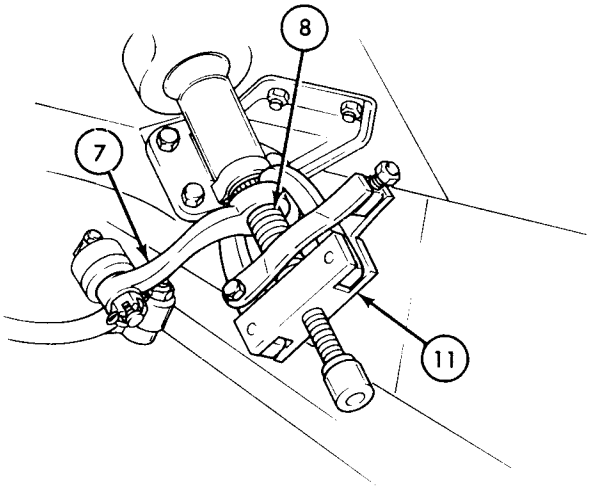

7.	Forward end of steering gear (17)	Horn switch grommet (16)	Remove.	
8.	Cable retainer clip (13) to left wheel well (12)	Capscrew (15) and lockwasher (14)	Remove.	Discard lockwasher (14).

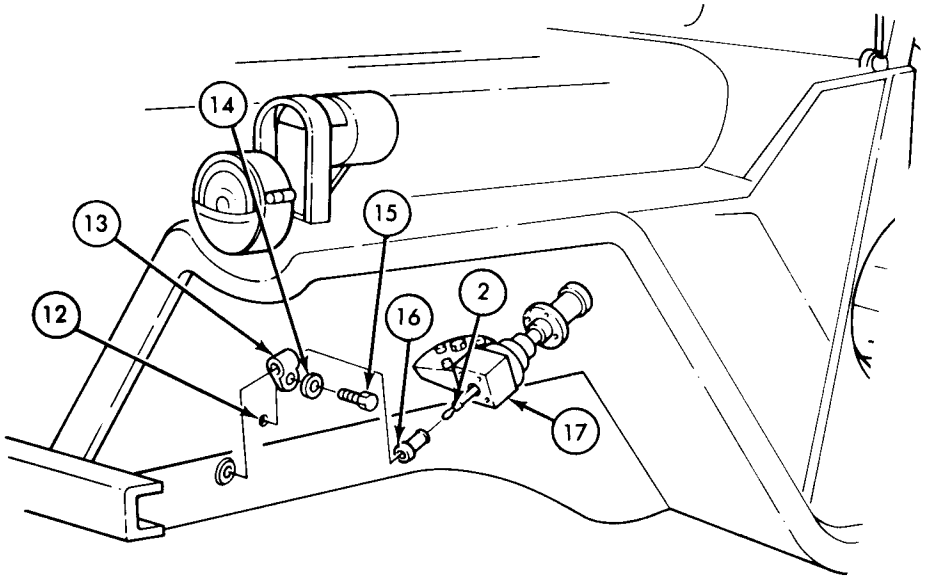

TA 156157

14-7. Steering Gear Maintenance (Cont'd)

STEP NO.	LOCATION	ITEM	ACTION	REMARKS
9.	Flange and insulator assembly (1)	Upper flange bolt (2)	Loosen.	
10.	Steering gear (4) to underbody side rail (10)	Three capscrews (6), one brake line retainer (7), three washers (8), and locknuts (9)	Remove.	Discard locknuts (9).
11.		Steering gear (4)	Pull directly away from steering column shaft (3) and remove.	Clutch equalizer shaft bracket (5) will remain in place when steering gear is removed.

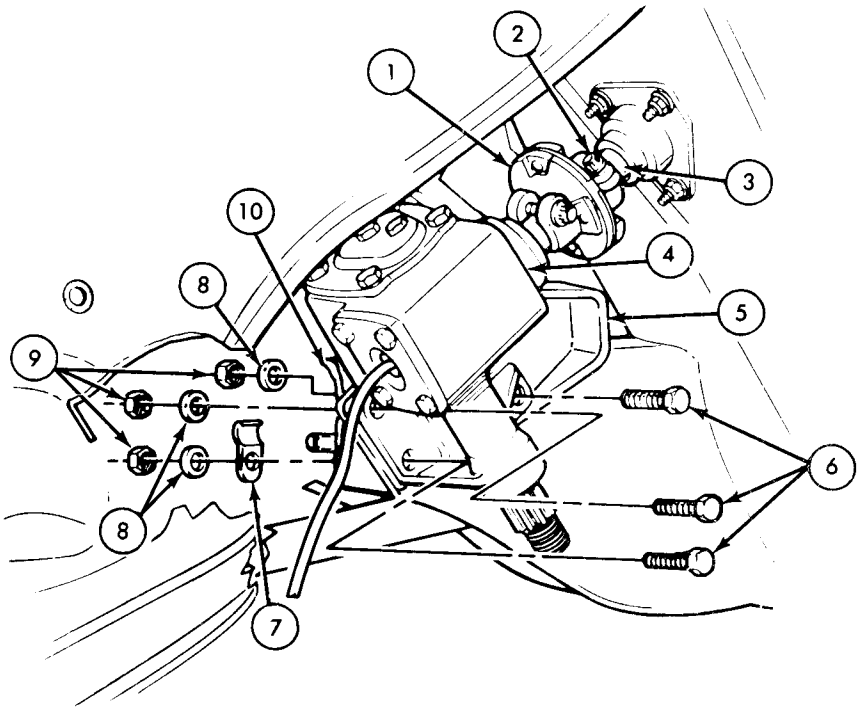

b. DISASSEMBLY

12.	Worm wheel shaft (18)	Flange and insulator assembly (1)	Loosen lower flange bolt (17) and remove.	
13.	Adjusting screw (14) on housing cover (13)	Jam nut (11)	Remove and turn screw (14) several turns clockwise.	Hold screw (14) while turning jam nut (11).

TA 156158

14-7. Steering Gear Maintenance (Cont'd)

STEP NO.	LOCATION	ITEM	ACTION	REMARKS
14.	Housing cover (13)	Fill plug (12)	Remove and drain oil from housing (19).	
15.	Housing cover (13) to gear housing (19)	Four bolts (21)	Remove.	
16.		Housing cover (13) and gasket (16)	Remove from gear housing (19).	Discard gasket (16).
17.	Housing cover (13)	Adjusting screw (14) and washer bearing (20)	Remove.	
18.	Gear housing (19)	Sector shaft gear (15)	Remove.	If necessary, tap bottom of sector shaft gear (15) to loosen.

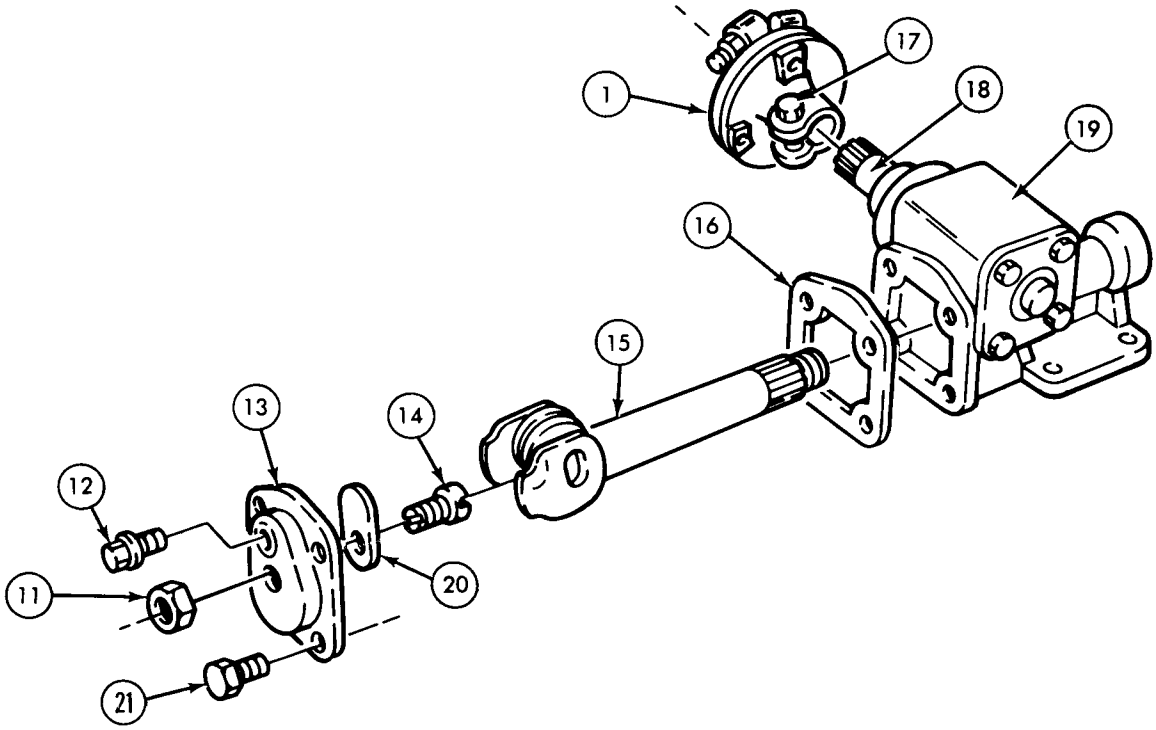

TA 156159

14-7. Steering Gear Maintenance (Cont'd)

STEP NO.	LOCATION	ITEM	ACTION	REMARKS
19.	Cap and seal (2) to gear housing (8)	Four bolts (1)	Remove.	
20.		Cap and seal (2), and gaskets (3)	Remove from gear housing (8).	Discard cap and seal (2) and gaskets (3).
21.	Gear housing (8)	Worm wheel (6)	Remove.	
22.	Worm wheel (6)	Two worm wheel bearings (5) and one cup (4)	Remove.	
23.	Gear housing (8)	Worm wheel seal (10)	Remove.	Discard worm wheel seal (10).
24.		Worm wheel bearing cup (7)	Remove from gear housing (8).	Use a slide hammer.
25.	Gear housing (8)	Sector shaft gear seal (11)	Remove.	Discard gear seal (11).
26.		Two sector shaft gear bearing sleeves (9)	Remove each from gear housing (8).	Use a slide hammer. Discard bearing sleeves (9).

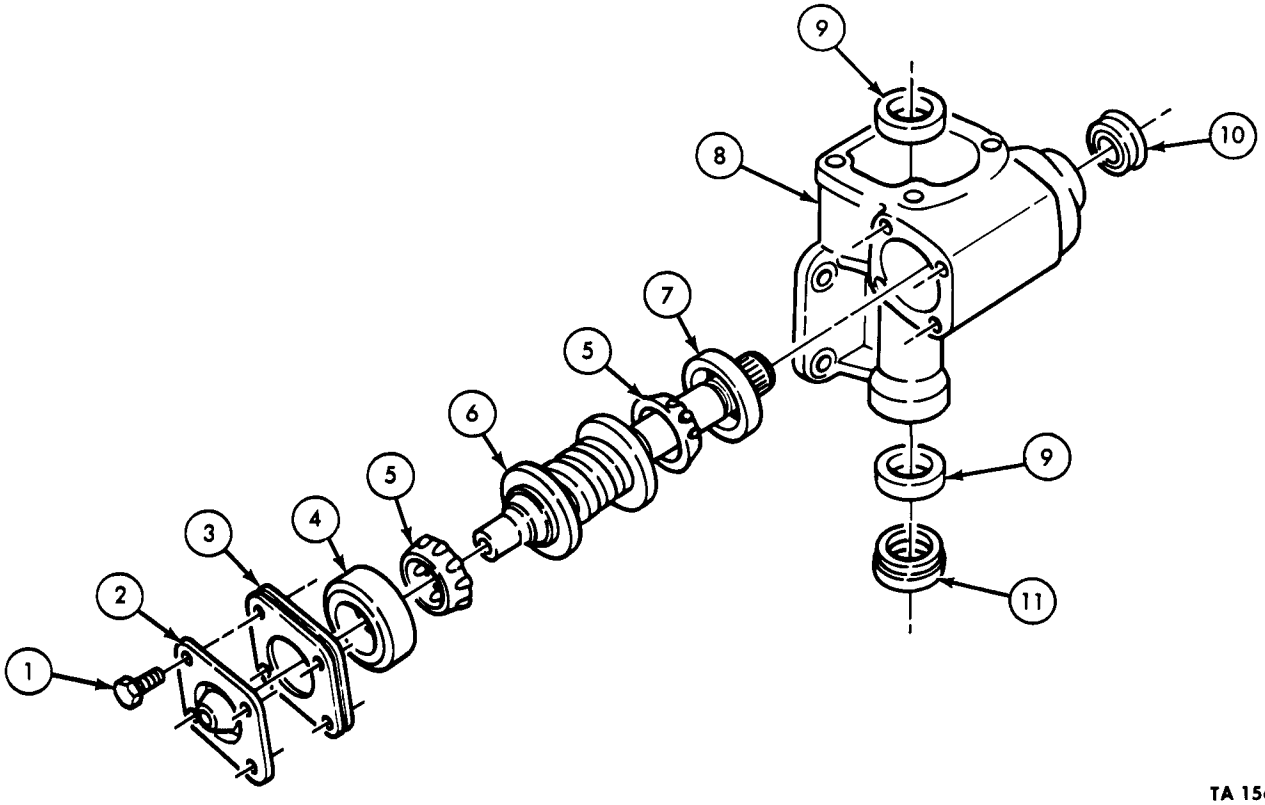

TA 156160

14-7. Steering Gear Maintenance (Cont'd)

STEP NO.	LOCATION	ITEM	ACTION	REMARKS
	c. CLEANING AND INSPECTION			

WARNING

- Drycleaning solvent is flammable and will not be used near an open flame. A fire extinguisher will be kept nearby when the solvent is used. Use only in well-ventilated places. Failure to do this may result in injury to personnel and/or damage to equipment.
- Compressed air source will not exceed 30 psi. When cleaning with compressed air, eyeshields must be worn. Failure to wear eyeshields may result in injury to the eyes.

27.		All metal steering gear assembly components	*a.* Clean in drycleaning solution. *b.* Blow dry with compressed air. *c.* Clean gasket surfaces of all old gasket material. *d.* Make sure all splines, seals, and threads are free of paint.	
28.		Steering gear assembly components	Inspect for wear, dents, bends, cracks, pitting, and stripped threads.	Replace if worn, dented, bent, cracked, pitted, or threads stripped.
29.		Flange and insulator assembly (12)	Check for damage, cracks, and deterioration.	Replace if insulator material is deteriorated, flanges are cracked, or flange serrations are damaged.

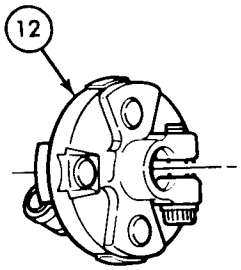

TA 156161

14-7. Steering Gear Maintenance (Cont'd)

STEP NO.	LOCATION	ITEM	ACTION	REMARKS
d. REASSEMBLY				
30.		Two new sector shaft gear bearing sleeves (10)	Install into gear housing (9).	Use arbor press and collar.
31.		New worm wheel seal (11) and sector shaft gear seal (12)	Install into housing (9).	Pack seals with GAA grease.
32.		Worm wheel bearing cup (8)	Install on worm wheel (6).	
33.		Worm wheel bearing (7)	Install on worm wheel (6).	
34.		Worm wheel assembly (6)	Install into housing (9).	
35.		Worm wheel bearing (5) and cup (4)	Install on worm wheel (6).	
36.		New gaskets (3), and cap and seal (2)	Secure to gear housing (9) with four bolts (1).	Do not tighten.

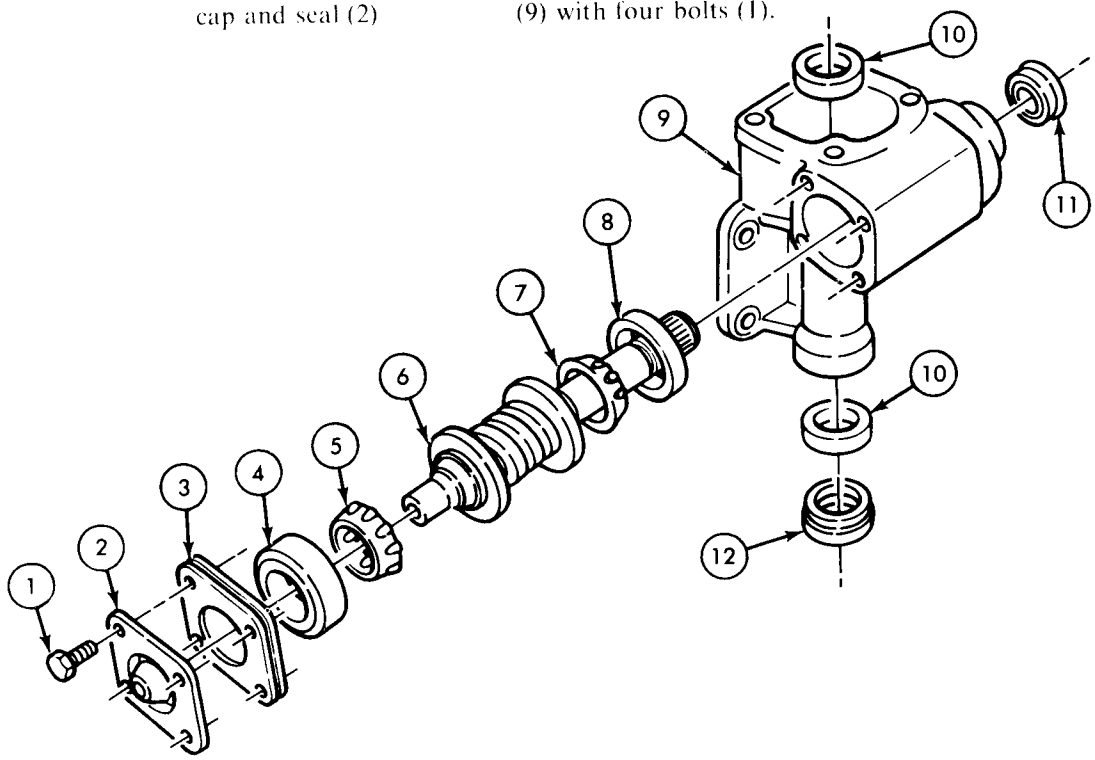

37.	Cap and seal (2) to gear housing (9)	Four bolts (1)	Tighten while turning worm wheel (6) back and forth.	Tighten 10-15 lb-ft (14-20 N•m).

TA 156162

14-7. Steering Gear Maintenance (Cont'd)

STEP NO.	LOCATION	ITEM	ACTION	REMARKS
		NOTE		
		Before proceeding to step 38, perform worm wheel preload in accordance with paragraph 14-8*a*. Allowable preload is 2.2 to 6.7 lb-in. (0.24-0.76 N•m).		
38.		Sector shaft gear (17)	Install into gear housing (9) half way.	
39.		Adjusting screw (15)	*a.* Insert into washer bearing (14).	
			b. Screw into housing cover (13).	Do not tighten.
40.		Housing cover (13) and new gasket (18)	*a.* Slide washer bearing (14) into sector shaft gear yoke (16).	If housing cover (13) does not mate to gear housing (9), turn adjusting screw (15) counterclockwise until housing cover (13) meets gear housing (9).
			b. Position to gear housing (9).	
			c. Secure with four bolts (19).	Tighten 10-15 lb-ft (14-20 N•m).

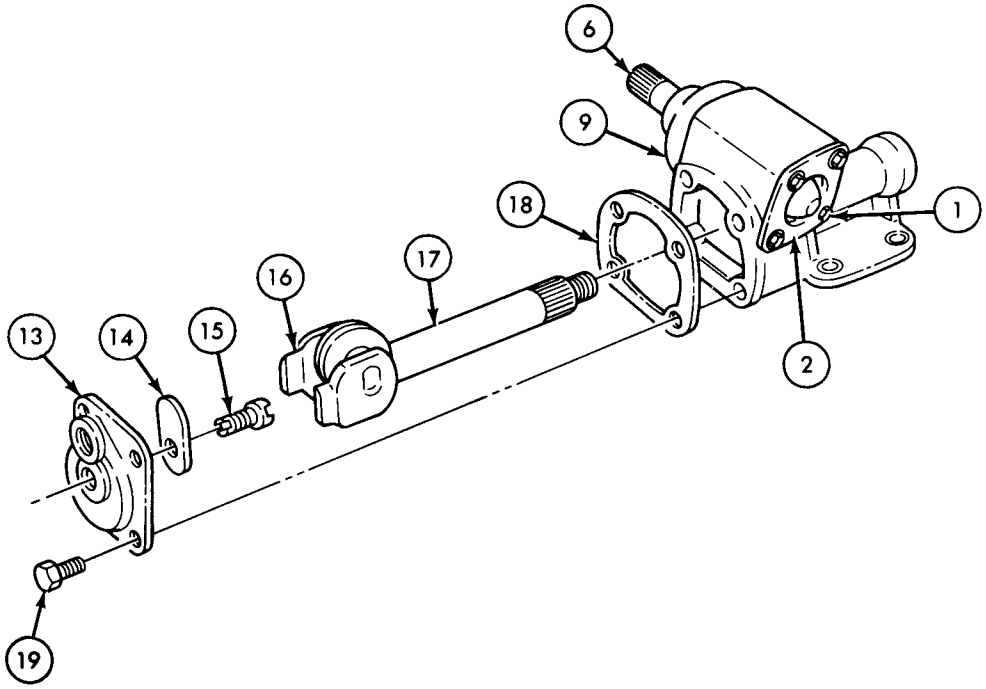

TA 156163

14-7. Steering Gear Maintenance (Cont'd)

STEP NO.	LOCATION	ITEM	ACTION	REMARKS
41.		Steering gear (7)	Lubricate.	See LO 9-2320-218-12.
42.		Cover plug (4)	Install in gear housing (7).	
43.		Adjusting screw jam nut (5)	Install on adjusting screw (6).	Do not overtighten.
44.		Flange and insulator assembly (1)	*a.* Aline to mark on steering gear shaft (3) and engage.	
			b. Tighten lower flange bolt (2).	Tighten 26-34 lb-ft (35-46 N•m).
				Perform worm wheel and shaft gear adjustment (para 14-8), before installing on vehicle.

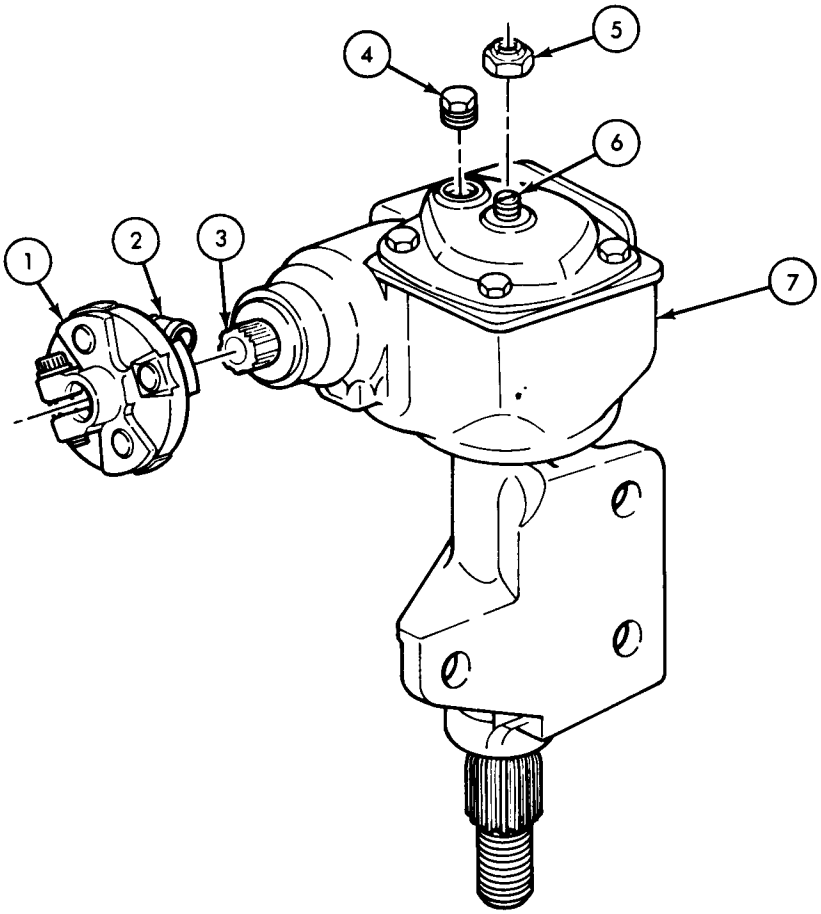

TA 156164

14-7. Steering Gear Maintenance (Cont'd)

STEP NO.	LOCATION	ITEM	ACTION	REMARKS
e. INSTALLATION				
45.		Horn wire (13)	Feed through flange and insulator assembly (1), and steering gear (7).	
46.		Steering gear (7) and flange and insulator assembly (1)	*a.* Aline to marks on steering column shaft (9).	
			b. Engage flange and insulator assembly (1) with column shaft (9)	
			c. Tighten upper flange bolt (8).	Tighten 26-34 lb-ft (35-46 N•m).
47.		Steering gear (7) and clutch equalizer shaft bracket (10)	*a.* Secure to underbody side rail (18) with two capscrews (11), washers (17), and new locknuts (16).	Tighten 24-36 lb-ft (32-48 N•m).
			b. Secure to underbody side rail (18) with one capscrew (12), brake line retainer (14), washer (15), and new locknut (16).	

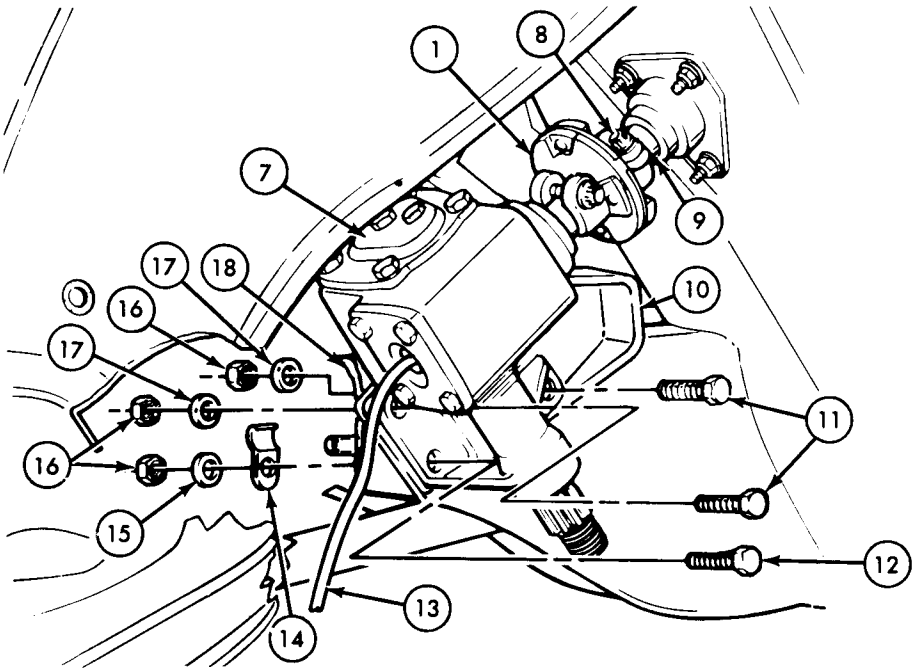

TA 156165

14-7. Steering Gear Maintenance (Cont'd)

STEP NO.	LOCATION	ITEM	ACTION	REMARKS
48.		Horn switch grommet (5)	Slide over cable (6) and install in end of steering gear (7).	
49.		Clip (2)	Insert cable (6) through clip (2) and secure to wheel well (1) with new lockwasher (3) and capscrew (4).	
50.		Cable (6)	Insert through body grommet (8).	

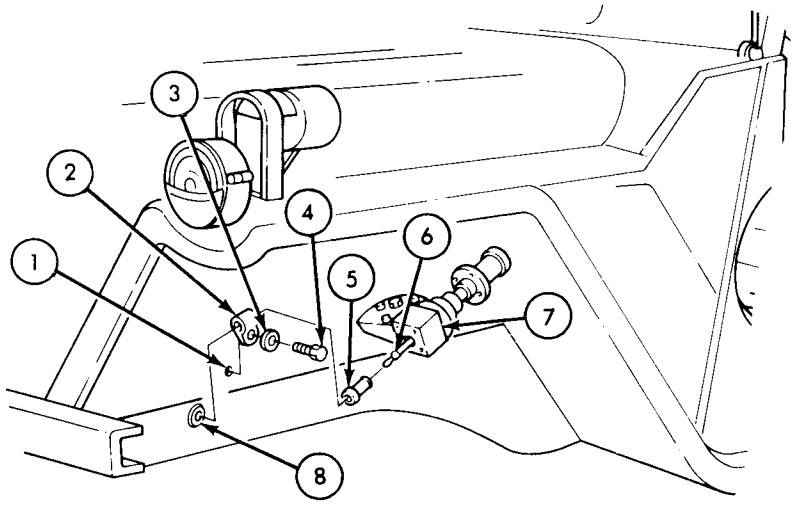

51.		Steering wheel (9)	*a.* Rotate to maximum turn.	
			b. Reverse rotation 1-3/4 turns and position lower steering wheel spoke (10) straight up and down.	Steering wheel spokes will form a "Y" with stamped diamond on the lower spoke (10).
52.		Steering pitman arm (11)	*a.* Install on steering gear shaft (12).	Pitman arm (11) must angle down from steering gear shaft (12) toward idler arm rod (15).
			b. Secure to steering gear shaft (12) with new lockwasher (13) and nut (14).	Tighten nut (14) 80-100 lb-ft (108-136 N•m).

TA 156166

14-7. Steering Gear Maintenance (Cont'd)

STEP NO.	LOCATION	ITEM	ACTION	REMARKS
	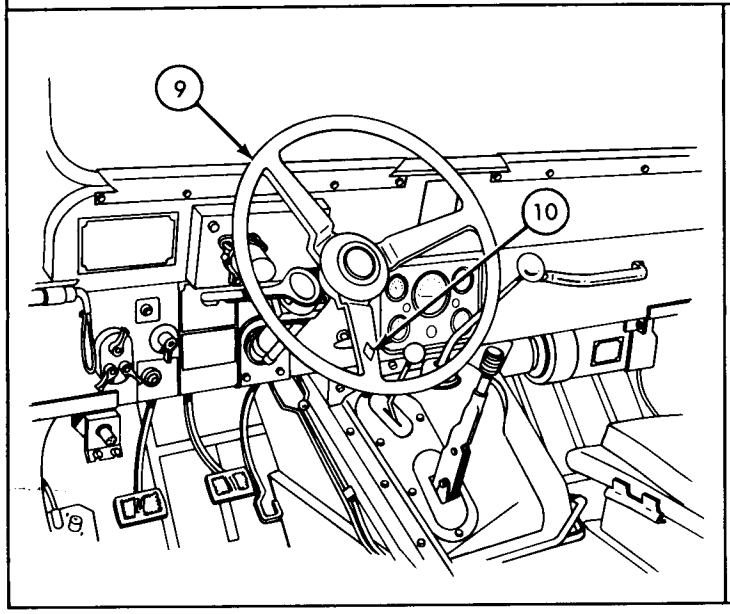		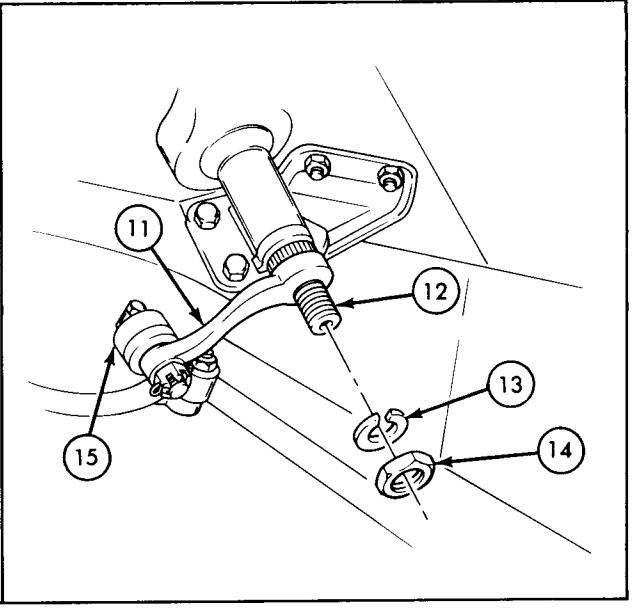	
53.		Cable terminal (16)	Push through rubber shell (17) until exposed.	
54.		Retaining washer (18)	Install on terminal (16).	
55.		Rubber shell (17)	Pull over retaining washer (18).	
56.		Circuit 25 connector (19)	Connect to horn switch cable (6).	

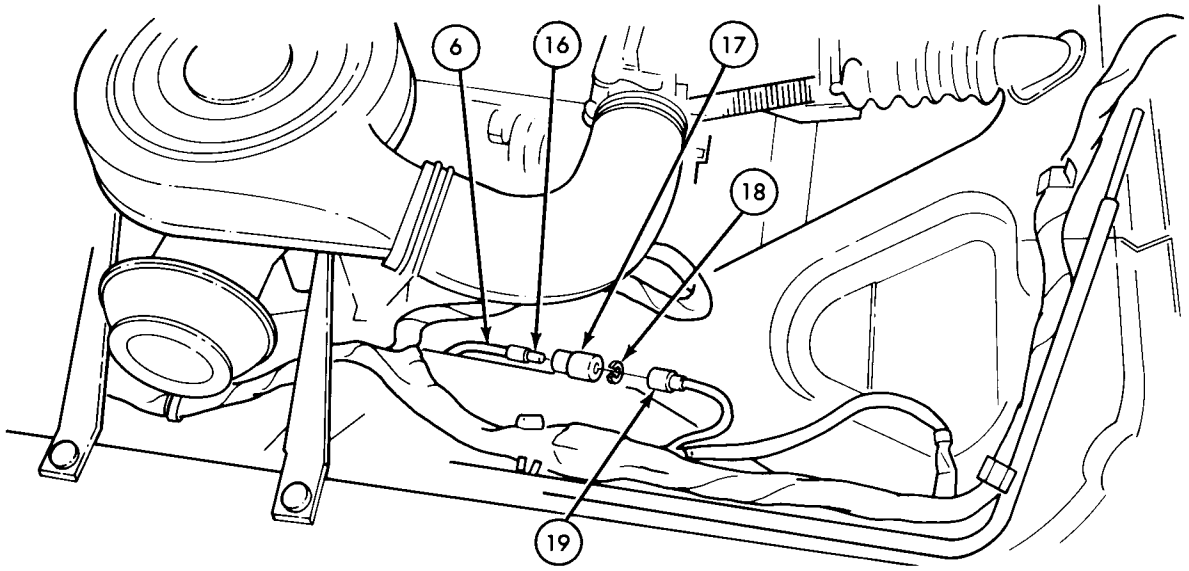

END OF TASK!

FOLLOW-ON TASKS: Install left front wheel (TM 9-2320-218-20-1-2).

TA 156167

14-8. Steering Gear Adjustment

This task covers:

a. Worm Wheel Preload Adjustment *b. Worm Wheel and Shaft Gear Adjustment*

INITIAL SETUP:

Applicable Models	Equipment Condition Reference	Condition Description
All	Para 14-7	Steering gear removed from vehicle.

Test Equipment

None

Special Tools

Torque wrench (0-200 lb-in)
Torque wrench (0-175 lb-ft)

Special Environmental Conditions

None

Materials/Parts

5/8 in. Shoulder bolt

Personnel Required

One mechanic

General Safety Instructions

None

Manual References

TM 9-2320-218-34P

STEP NO.	LOCATION	ITEM	ACTION	REMARKS
			a. WORM WHEEL PRELOAD ADJUSTMENT	
1.		Steering gear (9)	Secure lower portion in bench vise (11).	
2.		Shoulder bolt (2)	*a.* Cut off at top of threads.	Discard threaded portion of bolt (2).
			b. Secure in center of flange and insulator assembly (5).	Use emery cloth (3) or similar material around bolt (2) to obtain a tight, slip-free fit.
			c. Tighten upper flange bolt (4).	

14-8. Steering Gear Adjustment (Cont'd)

STEP NO.	LOCATION	ITEM	ACTION	REMARKS
3.		Shoulder bolt (2)	Rotate using lb-in torque wrench (1).	Should read 2.2-6.7 lb-in (0.24-0.76 N•m) before flange and insulator assembly (5) starts to rotate.
4.	Cap and seal (6) to gear housing (9)	Four bolts (7)	*a.* Remove and detach cap and seal (6) from gear housing (9). *b.* If torque reading is too high, add gasket or gaskets (8). *c.* If torque reading is too low, remove gasket or gaskets (8).	
5.		Cap and seal (6)	Secure to gear housing (9) with four bolts (7).	Tighten 10-15 lb-ft (14-20 N•m).

NOTE

Repeat steps 3, 4, and 5 until correct reading is obtained. If correct reading cannot be obtained by adjustment, replace worm wheel shaft (10).

6.	Flange and insulator assembly (5)	Upper flange bolt (4)	Loosen.	
7.		Shoulder bolt (2) and emery cloth (3)	Remove from flange and insulator assembly (5).	

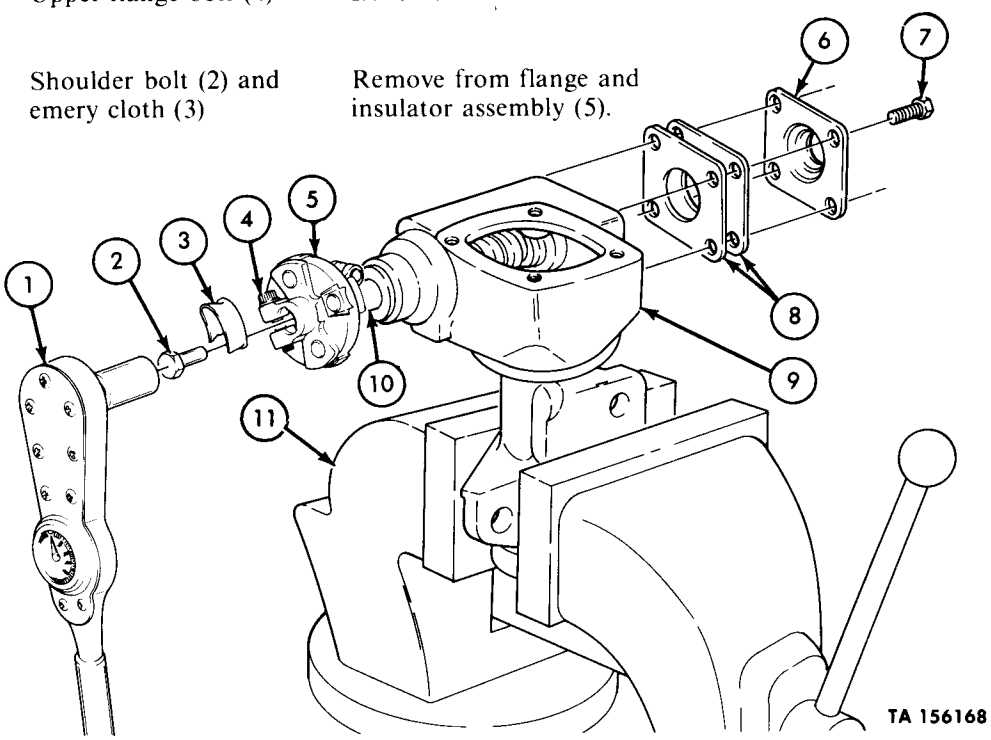

14-8. Steering Gear Adjustment (Cont'd)

STEP NO.	LOCATION	ITEM	ACTION	REMARKS
			b. WORM WHEEL AND SHAFT GEAR ADJUSTMENT	
8.		Steering gear (5)	Secure lower portion in bench vise.	
9.		Shoulder bolt (2)	*a.* Cut off at top of threads.	Discard threaded portion of bolt (2).
			b. Secure in center of flange and insulator assembly (4).	Use emery cloth (3) or similar material around bolt (2) to obtain a tight, slip-free fit.
10.		Flange and insulator assembly (4)	*a.* Rotate to extreme right position.	
			b. Rotate to extreme left position while counting number of revolutions.	One-half of total revolutions is high spot, or straight ahead position.
			c. Rotate back to high spot position.	
11.	Housing cover (8)	Jam nut (7)	Loosen.	
12.	Housing cover (8)	Adjusting screw (6)	Turn clockwise until slight drag is felt on flange and insulator assembly (4).	
13.		Jam nut (7)	Install on adjusting screw (6).	Finger tighten only.
14.		Flange and insulator assembly (4)	*a.* Position lb-in torque wrench (1) on shoulder bolt (2).	
			b. Rotate through high spot.	Torque wrench should read 11-20 lb-in. (1.2-2.3 N•m) at high spot.

14-8. Steering Gear Adjustment (Cont'd)

STEP NO.	LOCATION	ITEM	ACTION	REMARKS
15.		Adjusting screw (6)	*a.* If torque reading is too high, turn counterclockwise and repeat step 14.	
			b. If torque reading is too low, turn clockwise and repeat step 14.	If correct torque reading cannot be obtained, remove and replace adjusting screw (6), washer bearing, and sector gear shaft (9) (see para 14-7).
16.		Jam nut (7)	Lock by holding adjusting screw (6) in place with screwdriver and tighten nut (7) with wrench.	
17.	Flange and insulator assembly (4)	Upper flange bolt (10)	Loosen.	
18.		Shoulder bolt (2) and emery cloth (3)	Remove from flange and insulator assembly (4).	

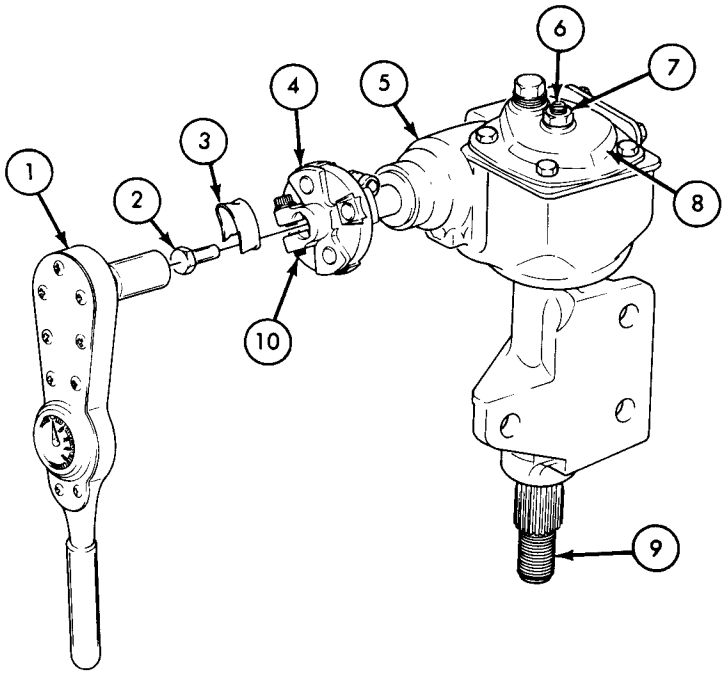

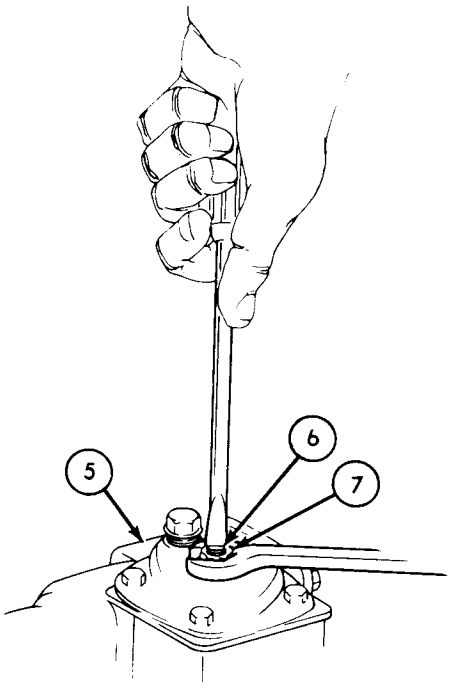

END OF TASK!

FOLLOW-ON TASK: Install steering gear on vehicle (para 14-7).

TA 156169

CHAPTER 15

BODY, SEATS, SOFT TOP, WINDSHIELD, HOOD, AIR CLEANER, AND MISCELLANEOUS COMPONENTS MAINTENANCE

15-1. Overview

a. This chapter covers cleaning, inspection, maintenance, and repair instructions for the M151A2 series bodies, seats, windshield, hood, air cleaner, and miscellaneous components assigned to the direct and general support levels. These instructions will be covered in the following sections:

b. Each section is preceded by a list that provides a breakdown of the procedures covered in that section and provides a paragraph and page number leading you to each task.

Section I. BODY AND HOOD

15-2. General

a. The body is a unit structure, wherein each part bears a portion of the entire structure load or stress. Since the body is a welded unit, it cannot be disassembled other than to remove attached parts.

b. When inspecting body for damage, it should be noted that one damaged area may affect another area appearing to be undamaged. This is because body and frame are one unit.

15-3. Tabulated Data

Tabulated data for the 1/4-ton body and hood is provided below:

Table 15-1. Tabulated Data — Body and Hood

Weight	400 lb (182 kg)
Body Framing	SAE 1017 Steel 0.060 in. (1.53 mm) thick
Body Sheet Metal	SAE 1009-1020 Steel 0.036-0.042 in. (.915-1.7 mm) thick

15-4. Body and Hood Maintenance Task Summary

15-4. Body and Hood Maintenance Task Summary (Cont'd)

15-5. General Body and Hood Inspection and Repair Instructions

This task covers:

a. Body Upperstructure
b. Body Understructure
c. Hood

INITIAL SETUP:

Applicable Models
All

Test Equipment
None

Special Tools
None

Materials/Parts
None

Personnel Required
One mechanic

Manual References
TM 9-2320-218-10
TM 9-2320-218-20-1
TM 9-2320-218-34P
TM 9-237
FM 43-2

Equipment Condition Reference	Condition Description
TM 9-2320-218-10	Parking brake set.
TM 9-2320-218-20-1-2	Front seats removed.

Special Environmental Conditions
None

General Safety Instructions
None

STEP NO.	LOCATION	ITEM	ACTION	REMARKS
		a. BODY UPPERSTRUCTURE		
1.		Body upperstructure (1)	Inspect the following:	
			a. All seat brackets (2) for security and damage.	Tighten if loose and repair if damaged (see para 15-6).
			b. All welds and joints for cracks and breaks.	Repair any cracked or broken welds or joints (see para 15-6).
			c. Panels for cracks, breaks, dents, and other damage.	Repair any cracked, broken, dented, or damaged panels (see para 15-6).

15-5. General Body and Hood Inspection and Repair Instructions (Cont'd)

STEP NO.	LOCATION	ITEM	ACTION	REMARKS

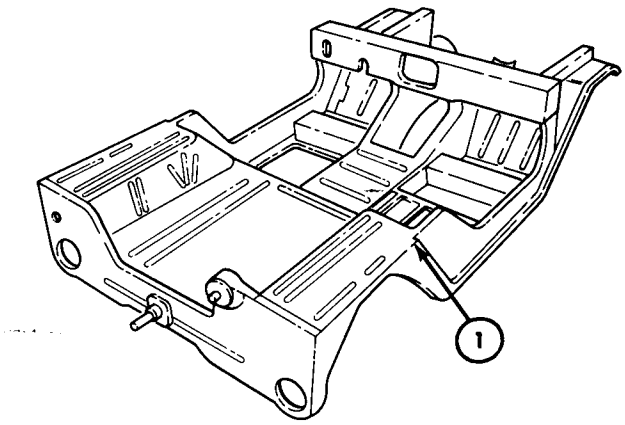

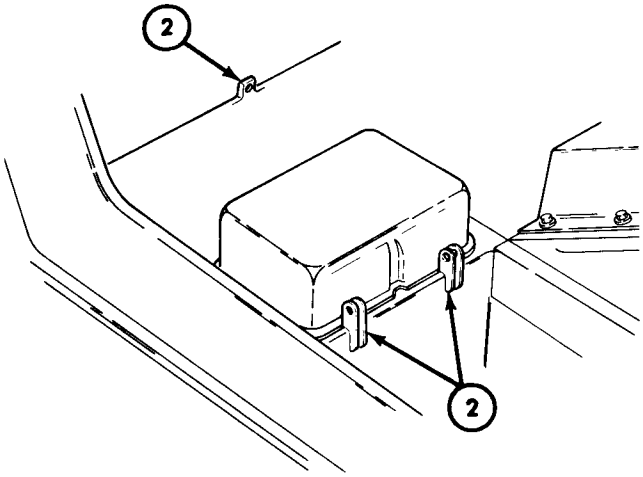

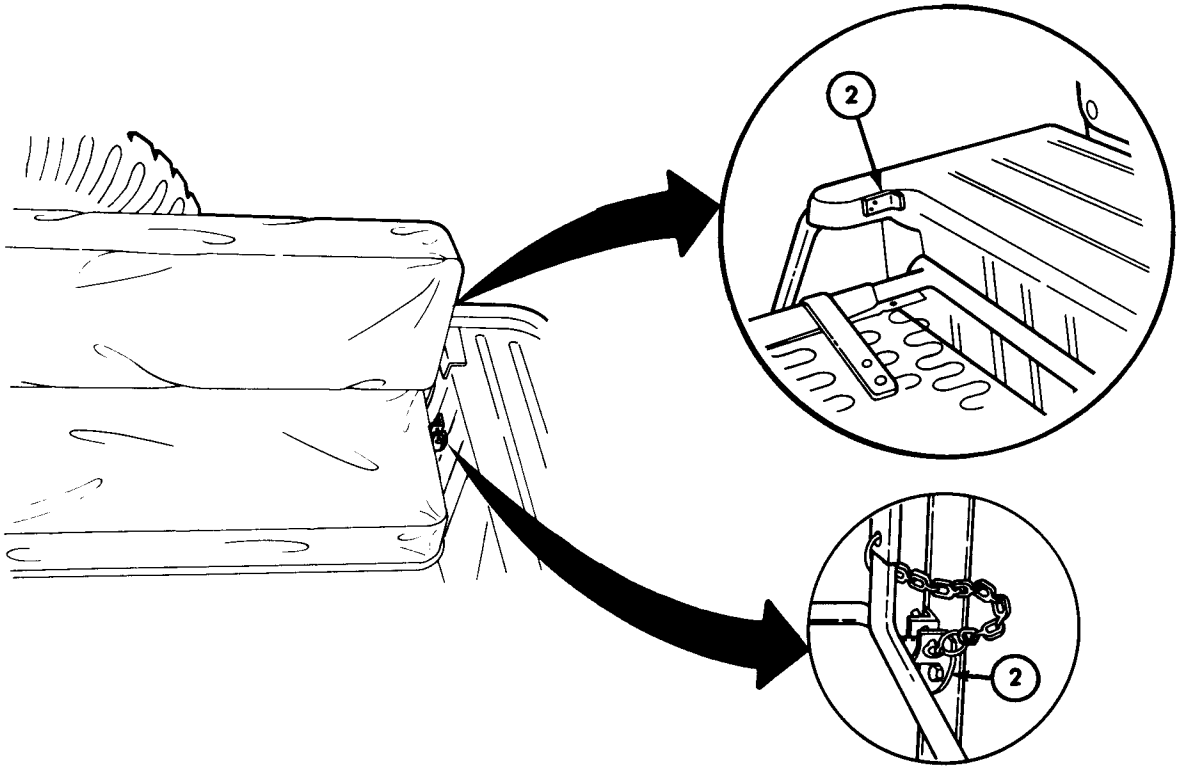

TA 156170

15-5. General Body and Hood Inspection and Repair Instructions (Cont'd)

STEP NO.	LOCATION	ITEM	ACTION	REMARKS
	b. BODY UNDERSTRUCTURE			
2.		Body understructure (1)	*a.* Inspect for corrosion damage at areas marked X (2).	Represents areas where corrosion commonly occurs.
			b. Inspect for corrosion damage at areas marked X (3).	Very critical high load areas.
		NOTE		
		Probe understructure of vehicle with hammer and punch to locate badly corroded areas. If corrosion has penetrated entirely through metal in areas marked X (3), order body replacement kit 12302506. If vehicle is repairable, see installation and repair instructions in underbody corrosion repair kit 12302502.		
3.		Body understructure (1)	Inspect the following:	
			a. All structural parts, especially inner (4) and outer rails (5), crossmembers (8), coil spring seats (6), and suspension support brackets (7) for damage and cracked welds.	Repair any parts that are damaged or have cracked or broken welds (see para 15-6).
			b. Look for elongated or torn mounting bolt holes (9).	Repair elongated or torn holes (see para 15-6).

15-5. General Body and Hood Inspection and Repair Instructions (Cont'd)

STEP NO.	LOCATION	ITEM	ACTION	REMARKS

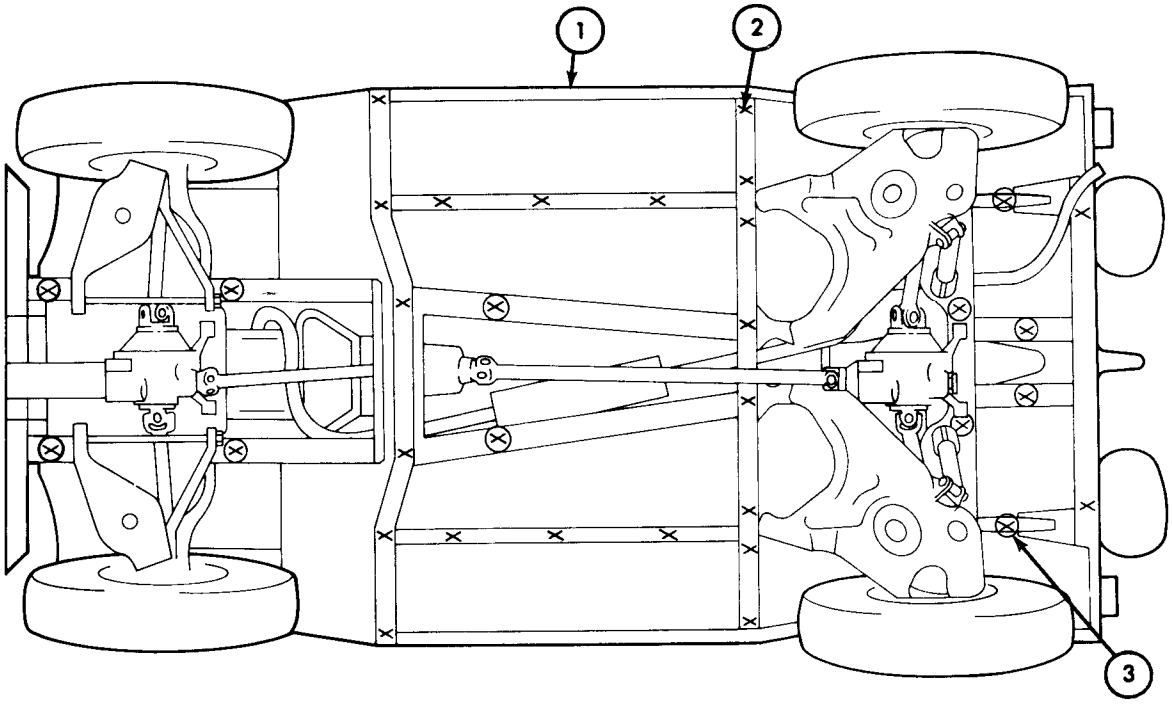

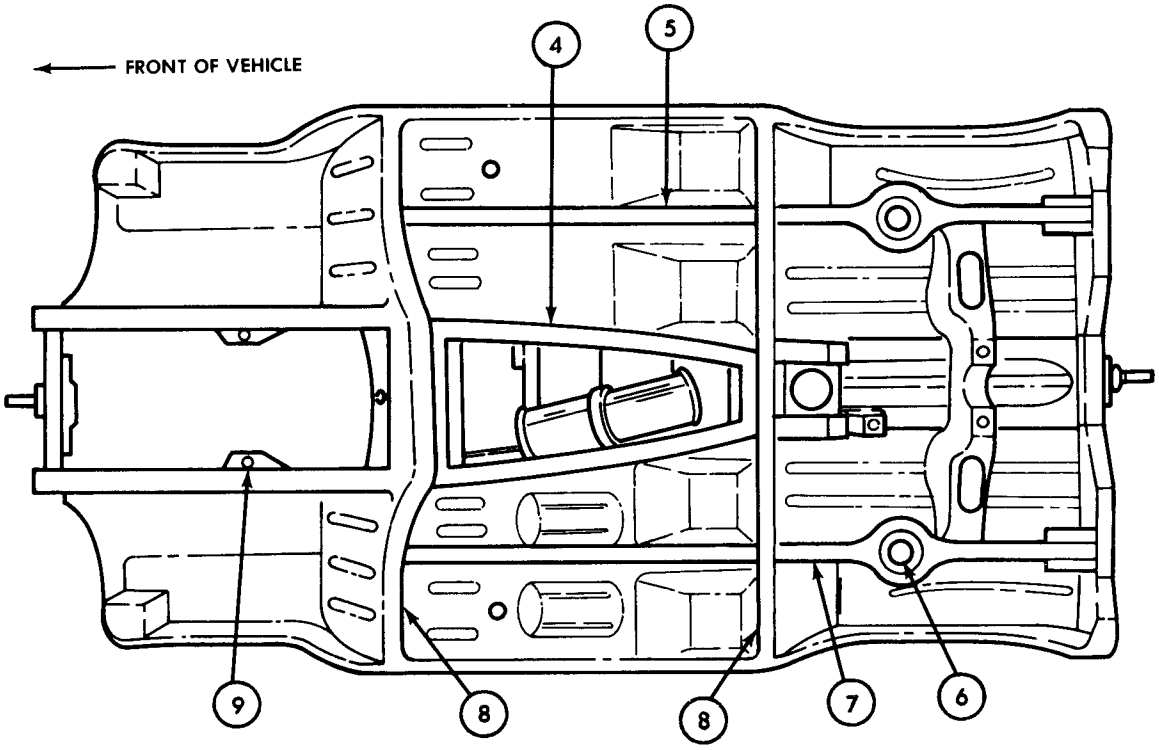

TA 156171

15-5. General Body and Hood Inspection and Repair Instructions (Cont'd)

STEP NO.	LOCATION	ITEM	ACTION	REMARKS
c. HOOD				
4.		Hood (2)	Inspect the following:	
			a. Look for dents and cracks.	Repair if dented or cracked (see para 15-6).
			b. Operation of spring catch (1).	Replace spring catch (1) if defective (see TM 9-2320-218-20-1-2).
			c. Check operation of two fasteners (4) and two catches (3).	Replace if defective (see TM 9-2320-218-20-1-2).

15-5. General Body and Hood Inspection and Repair Instructions (Cont'd)

STEP NO.	LOCATION	ITEM	ACTION	REMARKS

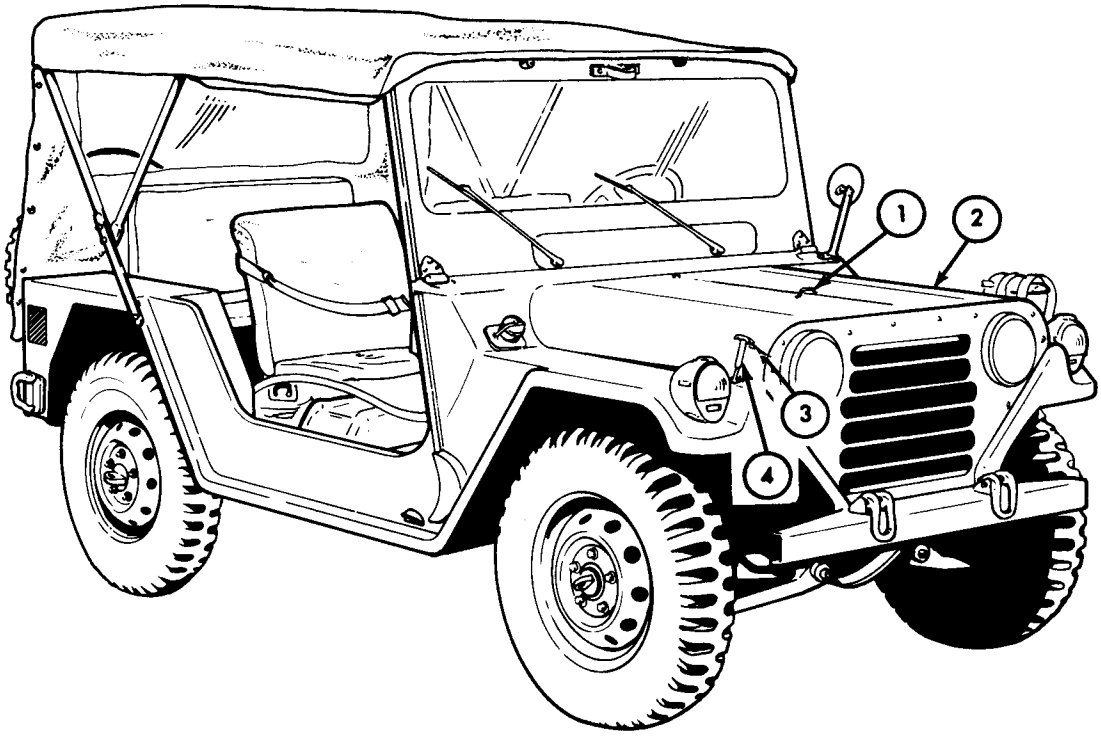

END OF TASK!

FOLLOW-ON TASK: Install front seats (TM 9-2320-218-20-1-2).

TA 156172

15-6. General Repair Instructions

This task covers:

a. Body Sheet Metal Repair
b. Spare Wheel Mounting Bolt Repair
c. Body Drain Openings Repair
d. Engine Rear Support Crossmember Repair

INITIAL SETUP:

Applicable Models
All

Test Equipment
None

Special Tools
None

Materials/Parts
None

Personnel Required
One mechanic

Manual References
TM 9-2320-218-10
TM 9-2320-218-20-1
TM 9-2320-218-34P
TM 9-237
FM 43-2

Equipment Condition Reference	Condition Description
TM 9-2320-218-10 Para 2-11	Parking brake set. Power plant removed.
TM 9-2320-218-10	Spare wheel removed.

Special Environmental Conditions
None

General Safety Instructions
None

STEP NO.	LOCATION	ITEM	ACTION	REMARKS

a. BODY SHEET METAL REPAIR

CAUTION

When welding, use heliarc or equivalent type equipment to avoid overheating or changing metal characteristics.

1.	Fenders (2), hood (3), and body side panels (1)	*a.*	Repair any damage or distortion.	See FM 43-2.
		b.	Repair any cracked or broken welds.	See TM 9-237.

15-6. General Repair Instructions (Cont'd)

STEP NO.	LOCATION	ITEM	ACTION	REMARKS
		b. SPARE WHEEL MOUNTING BOLT REPAIR		
2.		Spare wheel mounting bolt (5)	If broken, replace as follows:	M151A2 only.
			a. Remove weld (6) from bolt head (7).	Use file or chisel.
			b. Drive bolt (5) out and install new bolt with head toward front of vehicle.	
			c. Tack weld bolt head (7) in place.	See TM 9-237.
		c. BODY DRAIN OPENINGS REPAIR		
		NOTE Body drain openings (8) and (4) are repaired identically.		
3.		Four body drain openings (8) and (4)	Check for dirt and bends causing plugging.	Remove dirt if present or pry open if bent.

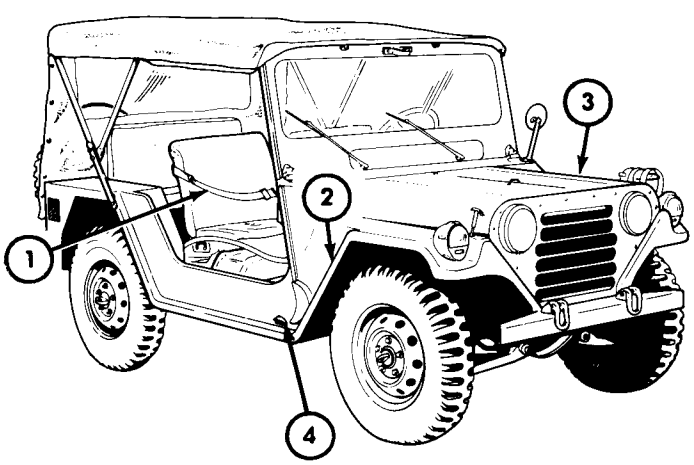

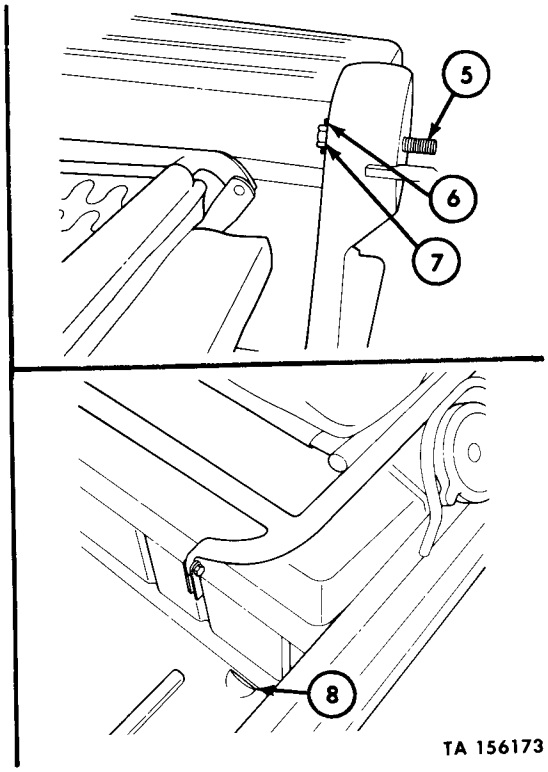

TA 156173

15-6. General Repair Instructions (Cont'd)

STEP NO.	LOCATION	ITEM	ACTION	REMARKS
		d. ENGINE REAR SUPPORT CROSSMEMBER REPAIR		
4.		Engine rear support crossmember (4)	Inspect for the following:	
			a. Two elongated or torn holes (1) in two mounting brackets (2).	Repair by straightening or welding (see FM 43-2 and TM 9-237).
			b. Cracked welds (3) around two mounting brackets (2).	Reweld if cracked (see TM 9-237).
		CAUTION		
		When straightening deflection (6) in crossmember (4) with a chain or cable, use care not to bend the flange (5) downward. Sizes and material of beams (7) and support blocks (8) are optional, providing they are strong enough for straightening process.		
			c. Deflection (6) of 1/4 in. (6.3 mm) or more at any point on crossmember (4).	Straighten if deflection is 1/4 in. (6.3 mm) or more (see step 5*e*).
		NOTE		
		Capping repair procedure outlined in steps 4*d* and 5*c* applies only to engine rear support crossmember (4) with crush damage. To repair rusted-through crossmember (4), see installation and repair instructions in underbody corrosion repair kit 12302502.		
			d. Damage crush height (9) of 11/16 in. (17.4 mm) or less.	Repair by capping if section height is 11/16 in. (17.4 mm) or less (see FM 43-2 and step 5*c* for capping instructions).
5.		Engine rear support crossmember (4)	If any of the conditions in step 4 require welding, proceed as follows:	
			a. Clean surfaces to be welded to prevent contamination of weld.	See TM 9-237.

15-6. General Repair Instructions (Cont'd)

STEP NO.	LOCATION	ITEM	ACTION	REMARKS

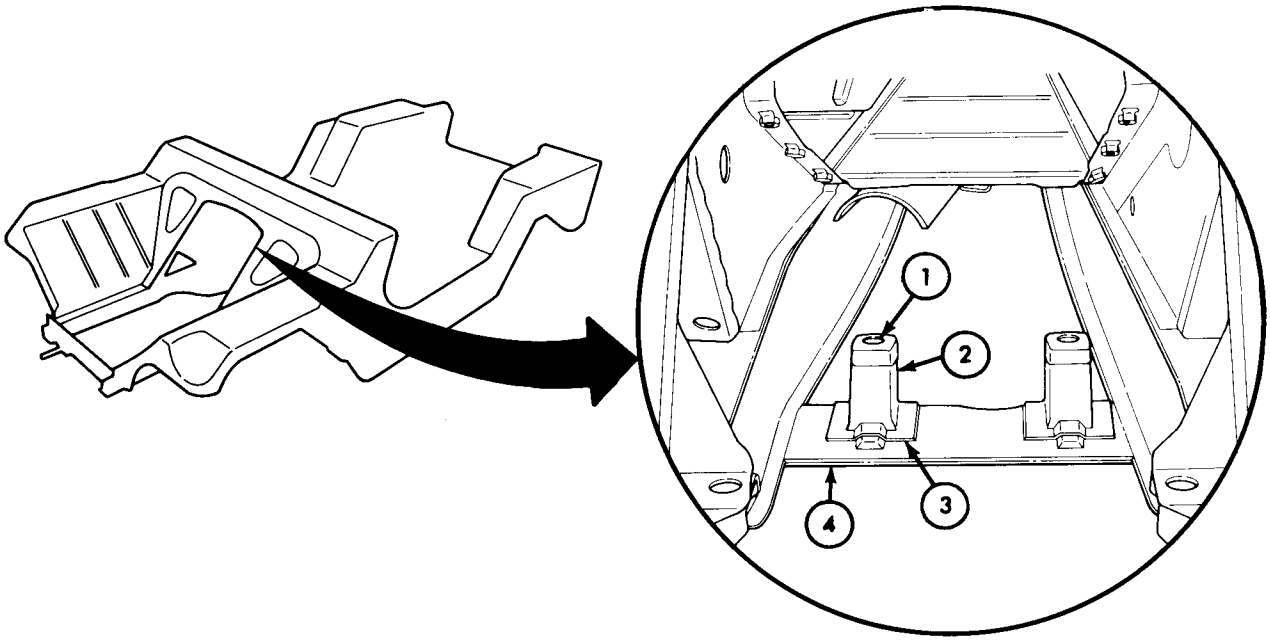

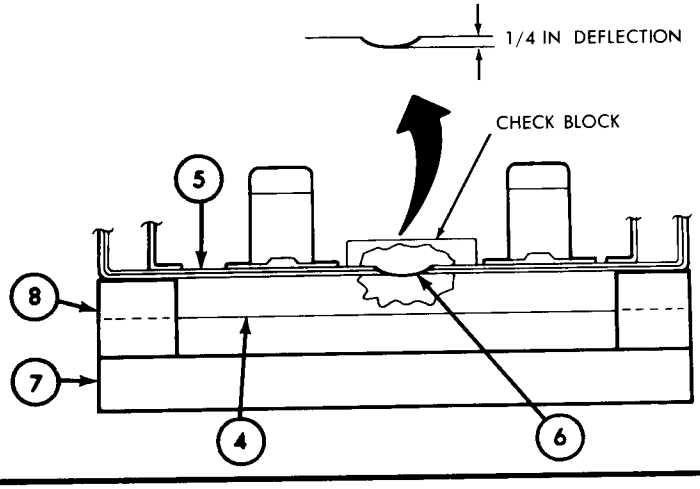

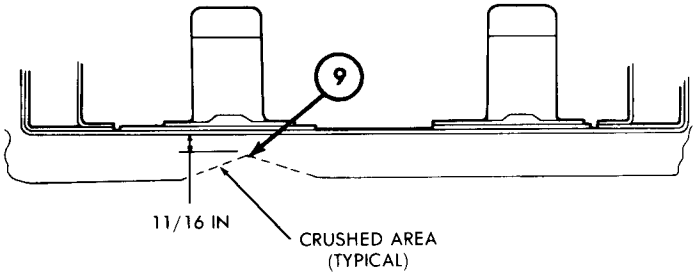

TA 156174

15-6. General Repair Instructions (Cont'd)

STEP NO.	LOCATION	ITEM	ACTION	REMARKS
			b. Weld by electric arc process if possible, using a low hydrogen 3/32 in. (2.38 mm) diameter electrode.	See TM 9-237.
			CAUTION When an electric arc weld is not possible, use oxyacetylene, being careful not to warp the metal panels with prolonged or excessive heat.	
			c. Repair crushed area (1) by capping (4) crossmember (3). Apply 1 in. (25.4 mm) long welds (2) on 2-1/2 in. (63.4 mm) centers.	Shape cap (4) from SAE 1010 or 1017 steel, 0.090 in. (2.38 mm) thick, as required. Engine removal is not necessary for this repair.
			d. Weld cracks or tears (5) 1/8 in. (3.17 mm) or less in width.	See TM 9-237.
			CAUTION Do not use heat to aid the removal of deflected areas, as this can change the metal characteristics.	
			e. Straighten deflected area (7) of cross-member (3) to orginal shape.	See FM 43-2 for straightening instructions.
6.		Engine rear support crossmember (3)	Inspect after repair as follows:	
			a. Look for broken welds after performing step 5*e*.	Reweld if welds are broken (see TM 9-237).
			b. Check 9 in. (229 mm) dimension in step 5*e*, before installing engine.	Distance between holes (6) must be 9 in. (229 mm) after straightening.
			c. Clean all welded and capped areas.	See TM 9-237.

15-6. General Repair Instructions (Cont'd)

STEP NO.	LOCATION	ITEM	ACTION	REMARKS

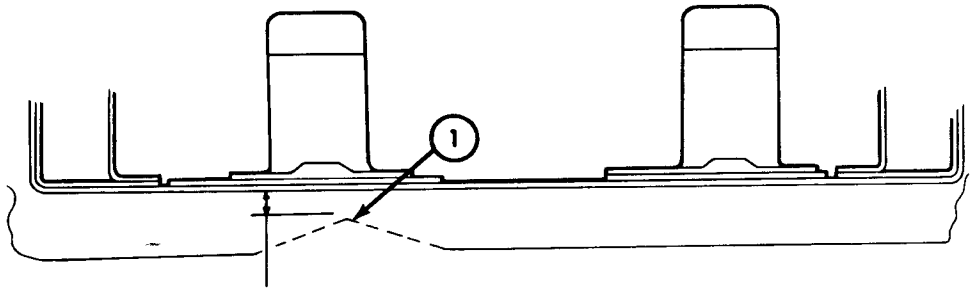

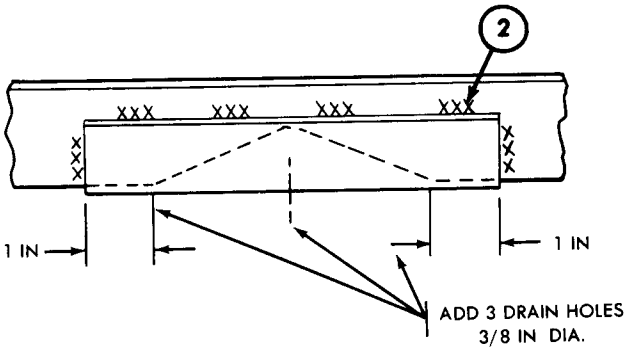

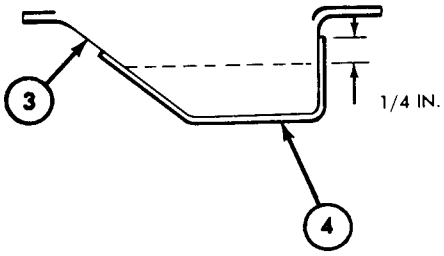

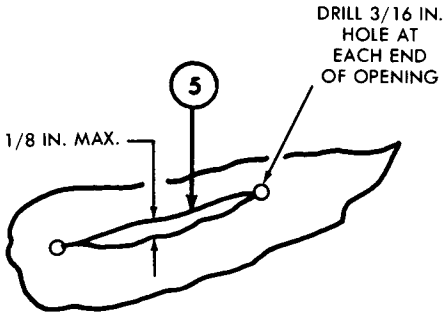

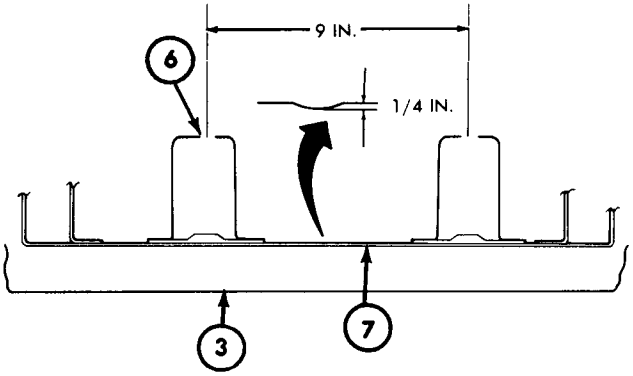

END OF TASK!

FOLLOW-ON TASKS:
- Install power plant (para 2-11).
- Install spare wheel (TM 9-2320-218-10).

TA 156175

15-7. Rear Crossmember and Frame Rail Inspection and Repair Instructions

This task covers:

a. Inspection
b. Repair Procedure A
c. Repair Procedure B
d. Repair Procedure C

INITIAL SETUP:

Applicable Models
M151A2

Equipment Condition Reference
TM 9-2320-218-20-1-1

Condition Description
Vehicle raised and supported.

Test Equipment
None

Special Tools
Feeler gage .005 in. (.127 mm)
Flat-bottom drill bit, 1/2 in. (12.70 mm)
Drill bit, 1/16 in. (1.59 mm)
Grinder
Two "C" clamps
Drill bit, 10 in. (254.0 mm) long x 3/8 in. (9.525 mm)
Drill bit, 1/2 in. (12.70 mm)
Torque wrench (0-175 lb-ft)

Special Environmental Conditions
None

Materials/Parts
Metal primer
Metal paint (O.D.)
Two support brackets (procedure B only) (see appendix D)
Upper plate (procedure C only) (see appendix D)
Lower plate (procedure C only) (see appendix D)
Steel tube (procedure C only) (see appendix D)
Bolt, 3/8 in. (9.525 mm) dia. x 4 3/4 in. (119.21 mm) long
One locknut, 3/8 in. (9.525 mm)

Personnel Required
One mechanic

General Safety Instructions
- Eye protection will be worn during all welding procedures.
- Eye protection will be worn during all drilling procedures.

Manual References
TM 9-2320-218-20-1-1
TM 9-2320-218-20-1-2
TM 9-237

15-7. Rear Crossmember and Frame Rail Inspection and Repair Instructions (Cont'd)

STEP NO.	LOCATION	ITEM	ACTION	REMARKS
a. INSPECTION				
		CAUTION		
		Do not use screwdriver or other tools to pry between edge of crossmember flange (2) and frame rails (3) when checking for broken welds.		
		NOTE		
		Check M151A2 vehicles for spot weld separation and crossmember cracks during regular service intervals for vehicle inspection.		
1.	Differential and shock crossmember assembly (1)	Feeler gage (4)	Pass between frame rails (3) and crossmember flange (2) to check for broken spot welds.	If broken spot welds are evident, use repair procedure A.
2.		Crossmember assembly	Visually inspect for broken spot welds, cracks, and continuous repair welds along edge.	If broken spot welds, cracks, and continuous repair welds are evident, use repair procedure B.
		NOTE		
		• When welding capability is not available, repair crossmember using repair procedure C.		
		• If spot welds are not broken, no previous welds have been made, and no crossmember cracks are evident, then no repairs are required. Return vehicle to service.		

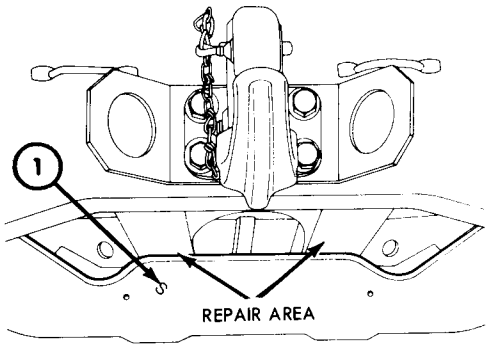

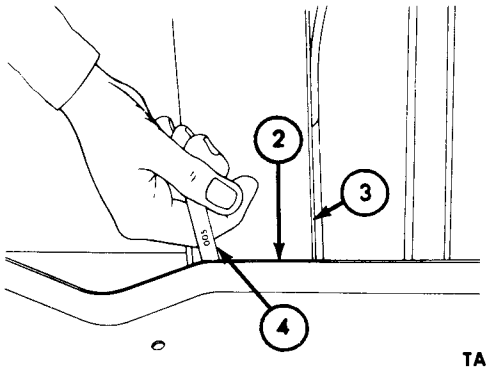

TA 156176

15-7. Rear Crossmember and Frame Rail Inspection and Repair Instructions (Cont'd)

STEP NO.	LOCATION	ITEM	ACTION	REMARKS

b. REPAIR PROCEDURE A

NOTE

Use this procedure when spot welds are broken but no cracks are evident and no previous repairs have been made.

3. Drill four rear crossmember repair holes as follows:

a. Thoroughly clean all areas to be welded to bare metal, removing all dirt, undercoating, oil, grease, rust, and paint.

b. Measure 1/2 in. (12.70 mm) right from inner edge of right frame rail (2) and 3/8 in. (9.525 mm) forward from rear edge of crossmember flange (5).

c. Mark first hole location (4).

d. Measure 1 in. (25.40 mm) right from first hole location (4) and mark second hole location (3).

e. Measure 1/2 in. (12.70 mm) left from inner edge of left frame rail (1) and 3/8 in. (9.525 mm) forward from rear edge of crossmember flange (5).

f. Mark third hole location (6).

g. Measure 1 in. (25.40 mm) left from third hole location (6) and mark fourth hole location (7).

15-7. Rear Crossmember and Frame Rail Inspection and Repair Instructions (Cont'd)

STEP NO.	LOCATION	ITEM	ACTION	REMARKS
		CAUTION Be certain wiring harness, located inside of left frame rail (1), is clear of drill bit when drilling holes in crossmember flange.		
			h. Drill four 1/16 in. (1.588 mm) pilot holes at marked locations (3), (4), (6), and (7).	
			i. Drill 1/2 in. (12.70 mm) diameter hole 1/8 in. (3.175 mm) deep in in hole locations (4) and (6), using flat bottom drill bit.	
			j. Drill 1/2 in. (12.70 mm) diameter hole 1/16 in. (1.588 mm) deep in hole locations (3) and (7), using flat bottom drill bit.	
4.		Four holes (3), (4), (6), and (7)	*a.* Clean edges in preparation for welding.	
			b. Plug weld.	See TM 9-237.
5.		Four welded areas (3), (4), (6), and (7)	Prime and paint olive drab (O.D.).	

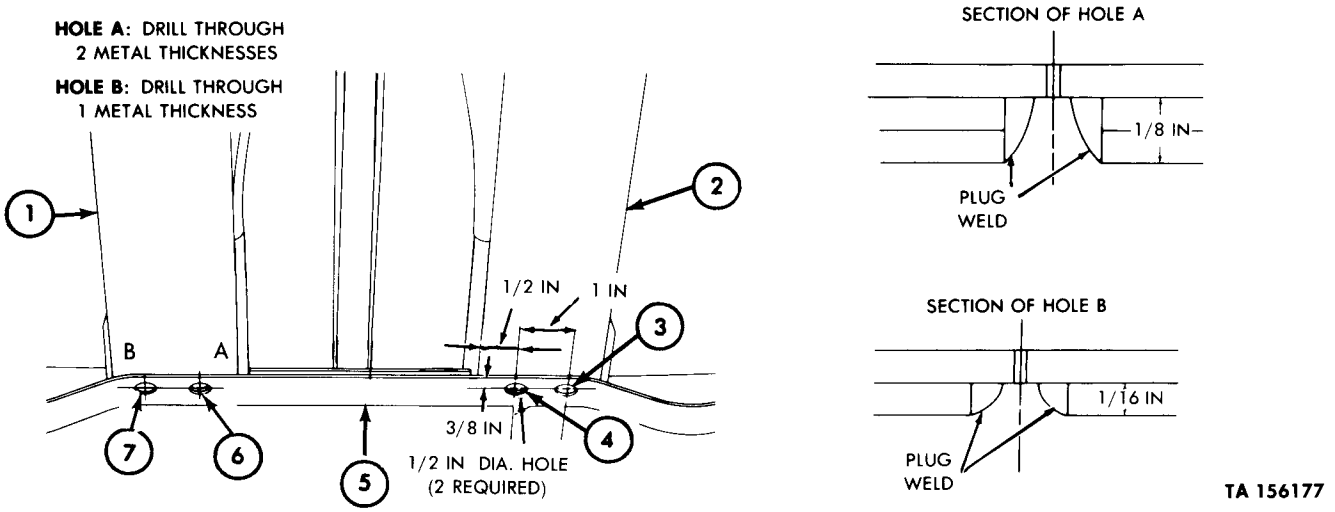

15-7. Rear Crossmember and Frame Rail Inspection and Repair Instructions (Cont'd)

STEP NO.	LOCATION	ITEM	ACTION	REMARKS

c. REPAIR PROCEDURE B

NOTE

Use this procedure if crossmember cracks are evident and/or previous welds were made.

6.	Crossmember (4)	*a.* Remove any previous fillet weld (2). *b.* Check with feeler gage (7) to ensure edge is not secured at any point to frame rails (6). *c.* Thoroughly clean all areas to be welded to bare metal, removing all dirt, undercoating, oil, grease, rust, and paint. *d.* If cracks have developed, drill a hole (1) at originating end of crack (5). *e.* Fillet weld along edge of crack (5).	

CAUTION

Do not allow fillet weld along the crack to extend beyond the edge of crossmember or secure crossmember to frame rails.

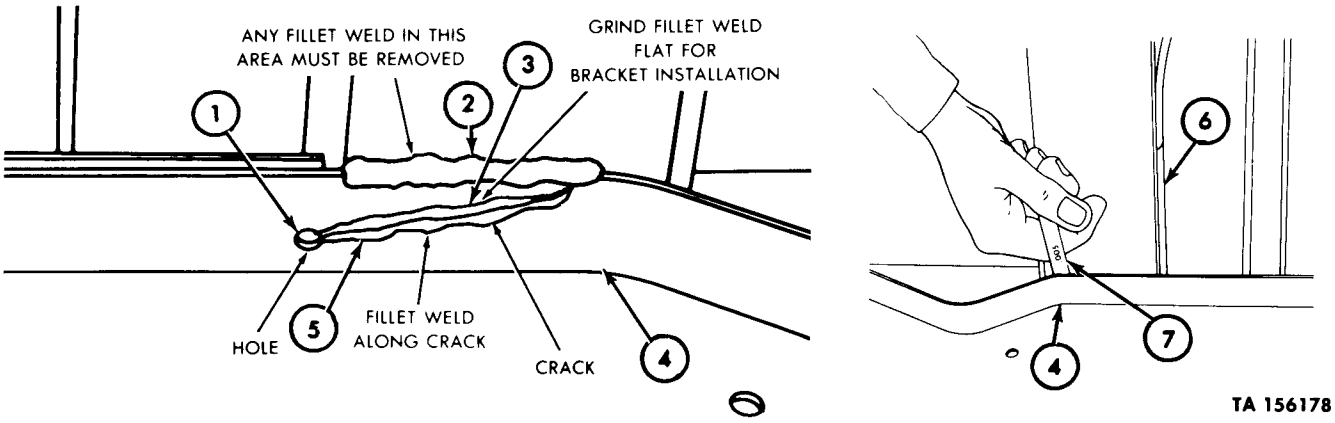

15-7. Rear Crossmember and Frame Rail Inspection and Repair Instructions (Cont'd)

STEP NO.	LOCATION	ITEM	ACTION	REMARKS
7.		Fillet weld (3)	Grind flat to ensure proper fit for installation of support brackets (8).	
8.		Support bracket (8)	*a.* Position to crossmember (4) and frame rail (6).	
			b. Adjust to ensure complete contact of five holes (9) with frame rail (6) and crossmember (4).	
		NOTE		
		If necessary, use "C" clamps to hold support bracket (8) in place during welding operation.		
			c. Plug weld five holes (9).	See TM 9-237.
9.		Support bracket (8) and exposed bare metal	Prime and paint olive drab (O.D.).	
10.		Support bracket (8)	Repeat operation for opposite side.	

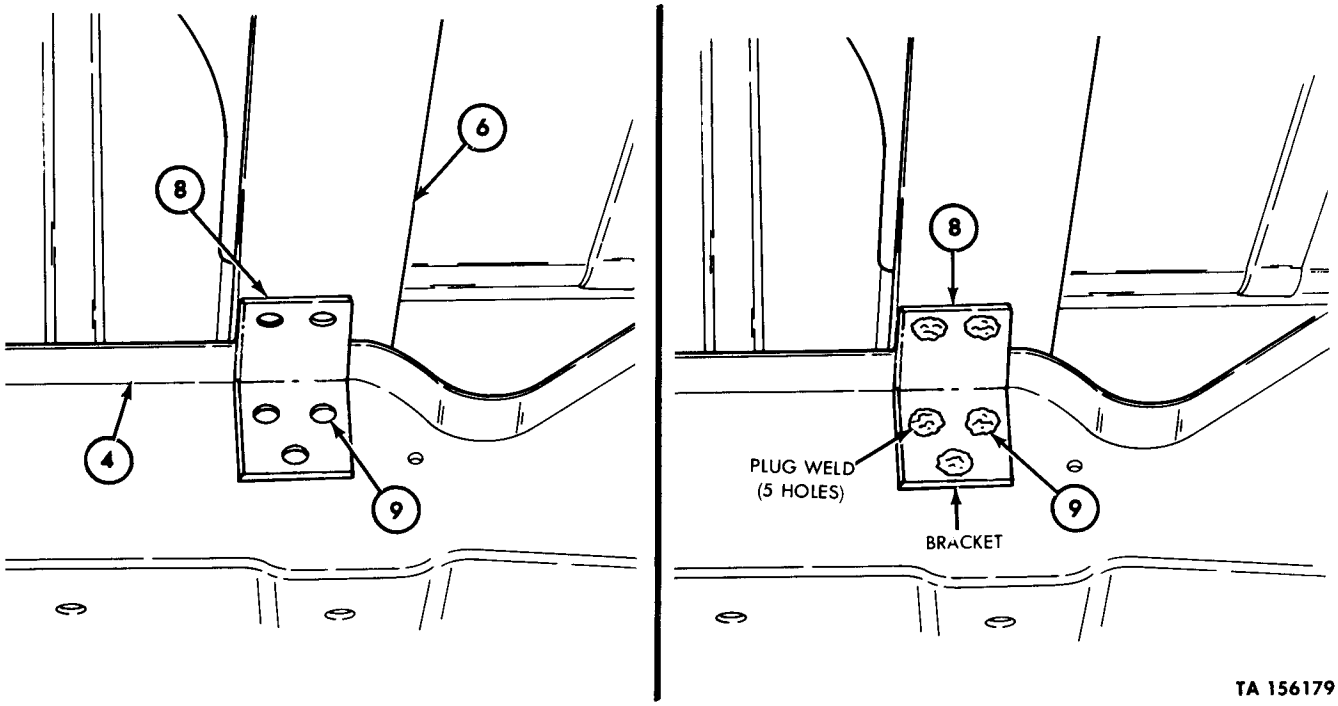

TA 156179

15-7. Rear Crossmember and Frame Rail Inspection and Repair Instructions (Cont'd)

STEP NO.	LOCATION	ITEM	ACTION	REMARKS
	d. REPAIR PROCEDURE C			
		NOTE		
		Use this procedure when welding capability is not available.		
11.	Upper plate (5), lower plate (8), and spacer (7)	Prime and paint olive drab (O.D.).		
		NOTE		
		If long drill bit is not available, the rear differential must be removed (see TM 9-2320-218-20-1-2) to perform step 12.		
12.		Drill two mounting holes as follows:		
		a. Using a 10 in. (254 mm) long, 3/8 in. (9.53 mm) diameter drill bit, drill one hole (2) in upper side of crossmember (3) directly vertical from existing hole (1).	Use existing hole (1) as guide for drilling.	
		b. Using a 1/2 in. (12.7 mm) diameter drill bit, enlarge existing hole (1).		
13.	Upper plate (5)	Place on top of crossmember (3) with lip towards rear of vehicle, and aline holes.		
14.	Lower plate (8) and spacer (7)	*a.* Place over bolt (6).		
		b. Install bolt (6) through crossmember (3) holes and upper plate (5).		

15-7. Rear Crossmember and Frame Rail Inspection and Repair Instructions (Cont'd)

STEP NO.	LOCATION	ITEM	ACTION	REMARKS
15.		Locknut (4)	Install on bolt (6) and tighten.	Tighten 20 lb-ft (27 N•m).

NOTE

Reinstall rear differential (see TM 9-2320-218-20-1-2) if it was removed for drilling operation.

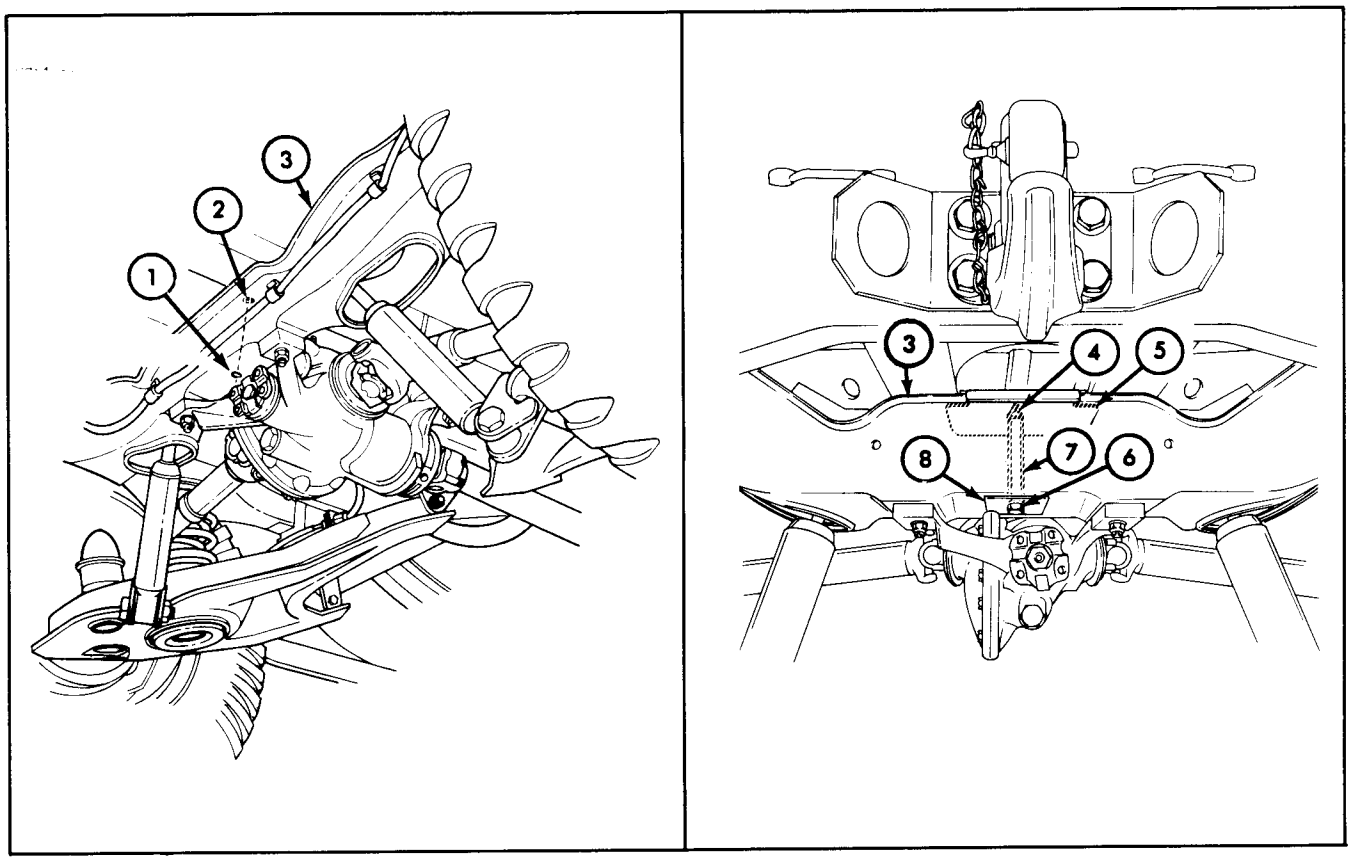

END OF TASK!

TA 156180

Section II. M79 RIFLE MOUNT, AMMUNITION RACKS, AND SPARE WHEEL GUARD, M825 VEHICLE

15-8. General

This section provides repair procedures for the M79 rifle mount, ammunition racks, and spare wheel guard. To find a specific repair procedure, see repair task summary below:

15-9. M79 Rifle Mount, Ammunition Racks, and Spare Wheel Guard Maintenance Task Summary

15-10. M79 Rifle Mount Repair

Procedure for straightening and repair of the M79 rifle mount can be found in TM 9-1000-205-12.

15-11. Ammunition Rack Repair

Procedures for straightening and repair of ammunition racks can be found in FM 43-2.

15-12. Spare Wheel Guard Repair

This task covers:

a. Removal
b. Repair
c. Installation

INITIAL SETUP:

Applicable Models
M825

Equipment Condition Reference
TM 9-2320-218-10
TM 9-2320-218-10

Condition Description
Parking brake set.
Spare wheel removed.

Test Equipment
None

Special Tools
None

Special Environmental Conditions
None

Materials/Parts
Six spare wheel guard lockwashers

Personnel Required
One mechanic

General Safety Instructions
None

Manual References
TM 9-2320-218-10
TM 9-2320-218-34P
FM 43-2

STEP NO.	LOCATION	ITEM	ACTION	REMARKS
a. REMOVAL				
1.	Spare wheel guard (2) to fender (1)	Six screws (4) and lockwashers (3)	Remove.	Discard lockwashers (3).
2.		Spare wheel guard (2)	Remove from fender (1).	
b. REPAIR				
3.		Spare wheel guard (2)	Straighten.	See FM 43-2.
c. INSTALLATION				
4.		Spare wheel guard (2)	Secure to fender (1) with six new lockwashers (3) and screws (4).	

15-12. Spare Wheel Guard Repair (Cont'd)

STEP NO.	LOCATION	ITEM	ACTION	REMARKS

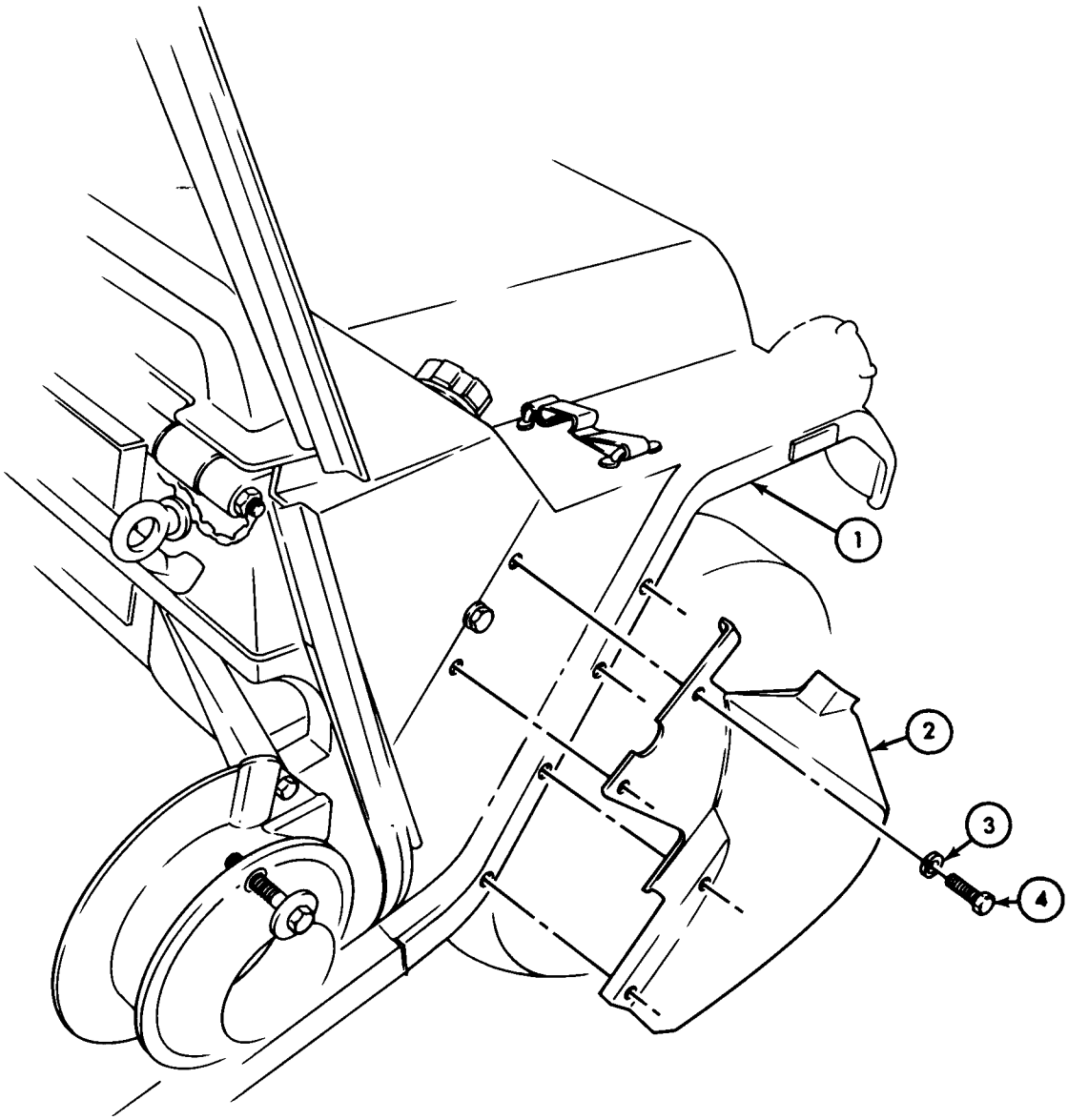

END OF TASK!

FOLLOW-ON TASK: Install spare wheel (TM 9-2320-218-10).

TA 156181

Section III. BODY EXTENSION ASSEMBLY, M718A1 AMBULANCE

15-13. General

The M718A1 ambulance body is a modified M151A2 vehicle design, the important difference being an 18 in. (457 mm) extension on rear of body. Also, spare wheel and tire assembly is relocated from rear to right rear side of the vehicle.

15-14. Body Extension Assembly, M718A1 Ambulance Maintenance Task Summary

15-15. Body Extension Assembly Repair

This task covers:

a. Inspection and Repair
b. Extension Assembly Modification
c. Reinforcement Installation

INITIAL SETUP:

Applicable Models	Equipment Condition Reference	Condition Description
M718A1	TM 9-2320-218-10	Parking brake set.

Test Equipment

None

Special Tools

Electric hand drill
11/32 in. (9 mm) drill bit
15/32 in. (12 mm) drill bit

Special Environmental Conditions

None

Materials/Parts

Sixteen lockwashers
Reinforcement parts (see appendix D)

Personnel Required

One mechanic
One assistant

General Safety Instructions

None

Manual References

TM 9-2320-218-10
TM 9-2320-218-34P
TM 9-237

STEP NO.	LOCATION	ITEM	ACTION	REMARKS
		a. INSPECTION AND REPAIR		
1.	Rear of vehicle	Extension assembly (8)	Inspect for body (13) damage caused by extension assembly (8) separation.	Repair body (13) if damaged (see TM 9-237).
		NOTE Make sure that extension assembly (8) is alined to body (13) and that all attaching hardware is tightened.		
		b. EXTENSION ASSEMBLY MODIFICATION		
2.	Seatbelt anchor (19) to left extension lower flange (7)	Nut (6), lockwasher (16), and capscrew (17)	Remove and detach seatbelt anchor (19).	Discard lockwasher (16).

15-15. Body Extension Assembly Repair (Cont'd)

STEP NO.	LOCATION	ITEM	ACTION	REMARKS
3.	Seatbelt anchor (2) to body (13)	Nut (3), two lockwashers (18), and capscrew (1)	Remove and detach seatbelt anchor (2).	Discard lockwashers (18).
4.		Extension support bracket (4)	*a.* Place bracket (4) on left extension assembly (5) and aline two holes with two existing seatbelt anchor (19) and (2) holes.	
			b. Using bracket (4) as a template, mark location of six holes.	
			c. Drill six 11/32 in. (9 mm) holes at marked locations.	
5.	Left support base (11) to body (13)	Upper nut (15), lockwasher (14), and capscrew (10)	Remove.	Discard lockwasher (14).
6.		Outer brace (9)	*a.* Aline round hole with upper hole (12) in support base (11).	

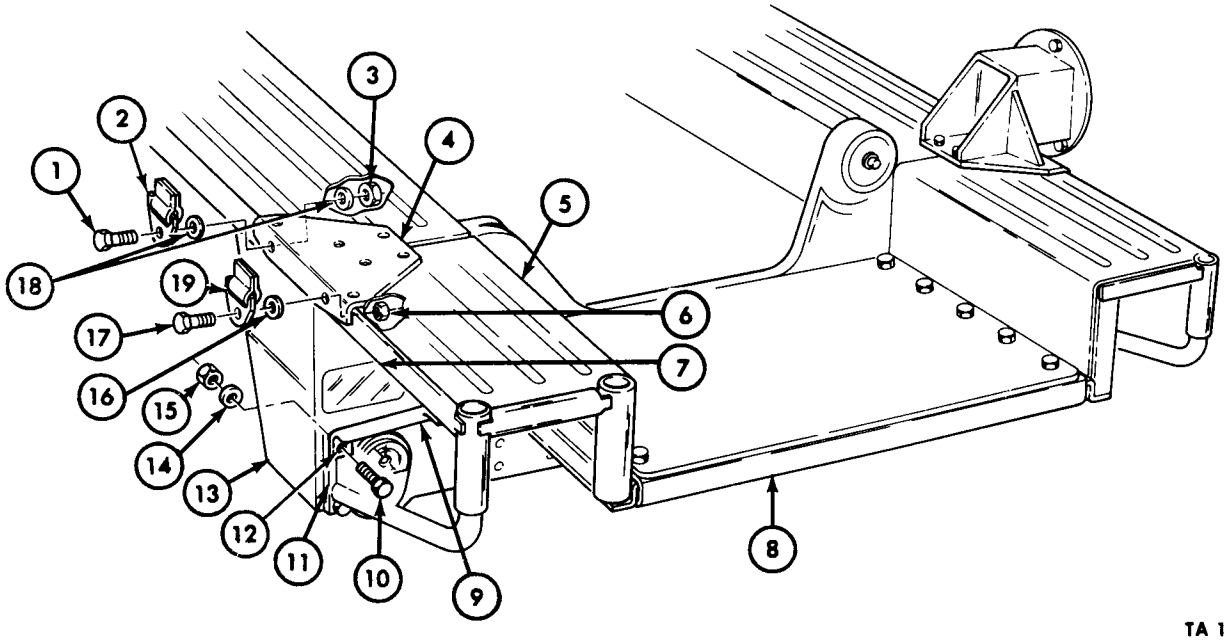

TA 156182

15-15. Body Extension Assembly Repair (Cont'd)

STEP NO.	LOCATION	ITEM	ACTION	REMARKS
			b. Using brace (10) as a template, mark location of hole on left extension lower flange (1).	
			c. Drill 11/32 in. (9 mm) hole at marked location.	
7.		Right extension assembly (3)	Repeat steps 5 and 6 to modify.	
8.	Center platform (8) to left (2) and right (3) extension assemblies	Two nuts (7), lockwashers (6), and capscrews (4)	Remove.	Capscrew (4) locations are second from rear end. Discard lockwashers (6).

NOTE

Perform step 9 only if the center platform (8) is attached to extension assemblies with tack welds.

9.			Drill two 11/32 in. (9 mm) holes through two existing holes (5).	
10.			Enlarge each lower outside bumperette mounting hole (9) with 15/32 in. (12 mm) drill.	Bumperettes are not installed on M718A1 model.
11.	Left reinforcement plate (11) to body (19)	Four nuts (12), lockwashers (13), and capscrews (14)	Remove and detach reinforcement plate (11) from body (19).	Discard plate (11). Discard lockwashers (13). Keep nuts (12) and capscrews (14) for installation.
12.	Tire mounting bracket (16) to right extension assembly (3)	Two nuts (18), lockwashers (17) and capscrews (15)	Remove.	Discard lockwashers (17).
13.	Right reinforcement plate (22) to body (19)	Four nuts (20), lockwashers (23), and capscrews (21)	Remove and detach reinforcement plate (22) from body (19).	Discard plate (22). Discard lockwashers (23). Keep nuts (20) and capscrews (21) for installation.

15-15. Body Extension Assembly Repair (Cont'd)

STEP NO.	LOCATION	ITEM	ACTION	REMARKS

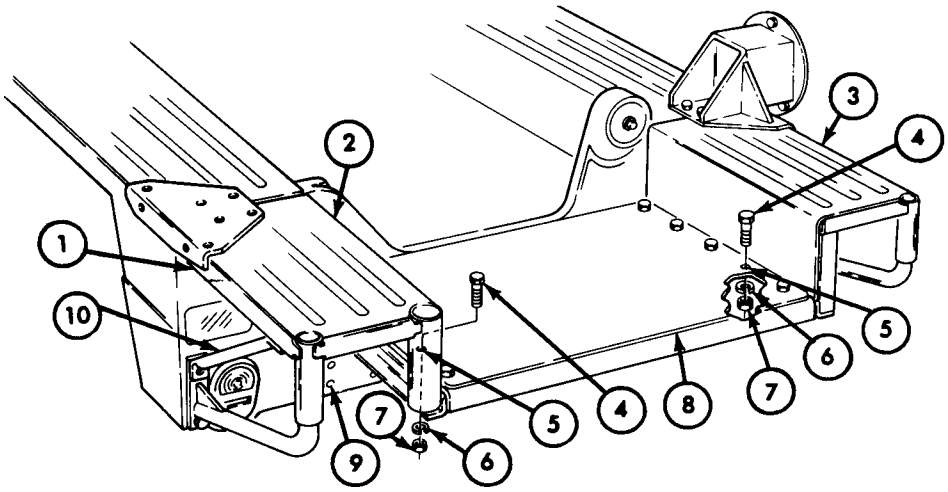

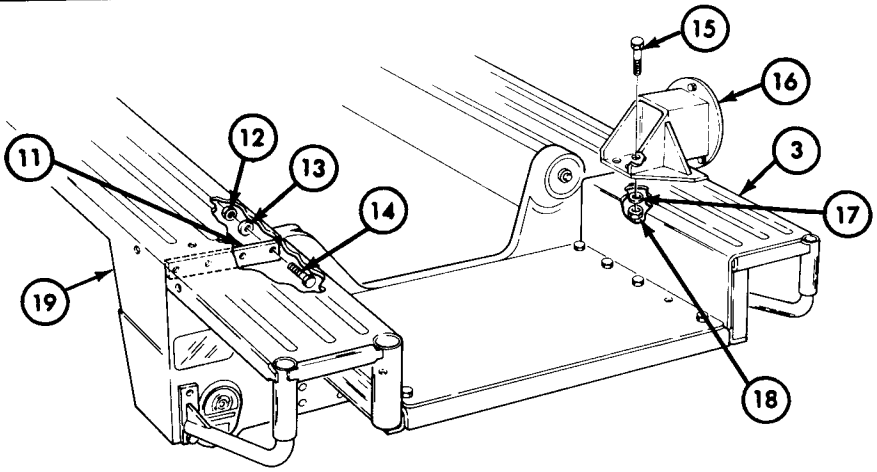

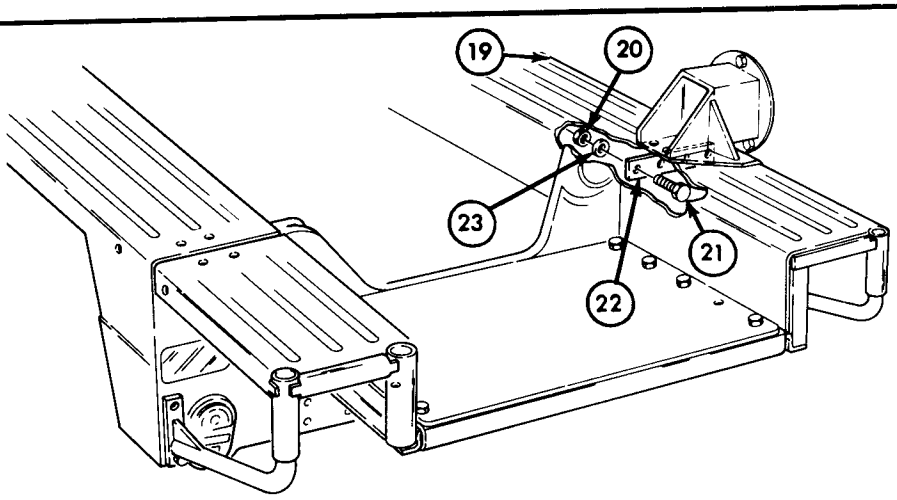

TA 156183

15-15. Body Extension Assembly Repair (Cont'd)

STEP NO.	LOCATION	ITEM	ACTION	REMARKS
			c. REINFORCEMENT INSTALLATION	
14.		Right reinforcement bracket (11)	*a.* Position under body (1) and aline with holes in the tire mounting bracket (7) and body (1).	
			b. Secure to body (1) with four capscrews (10), new lockwashers (12), and nuts (5).	Use capscrews (10) and nuts (5) removed in step 13. Finger tighten only.
			c. Secure to tire mounting bracket (7) with two capscrews (6), new lockwashers (8), and nuts (9).	Finger tighten only.
15.		Left reinforcement bracket (4)	*a.* Position under body (1) and aline with four holes in body (1).	
			b. Secure to body (1) with four capscrews (13),new lockwashers (3), and nuts (2).	Use capscrews (13) and nuts (2) removed in step 11. Finger tighten only.
16.		Reinforcement bracket (14)	Position under body (1) and aline two holes.	Hold in place.

15-15. Body Extension Assembly Repair (Cont'd)

STEP NO.	LOCATION	ITEM	ACTION	REMARKS

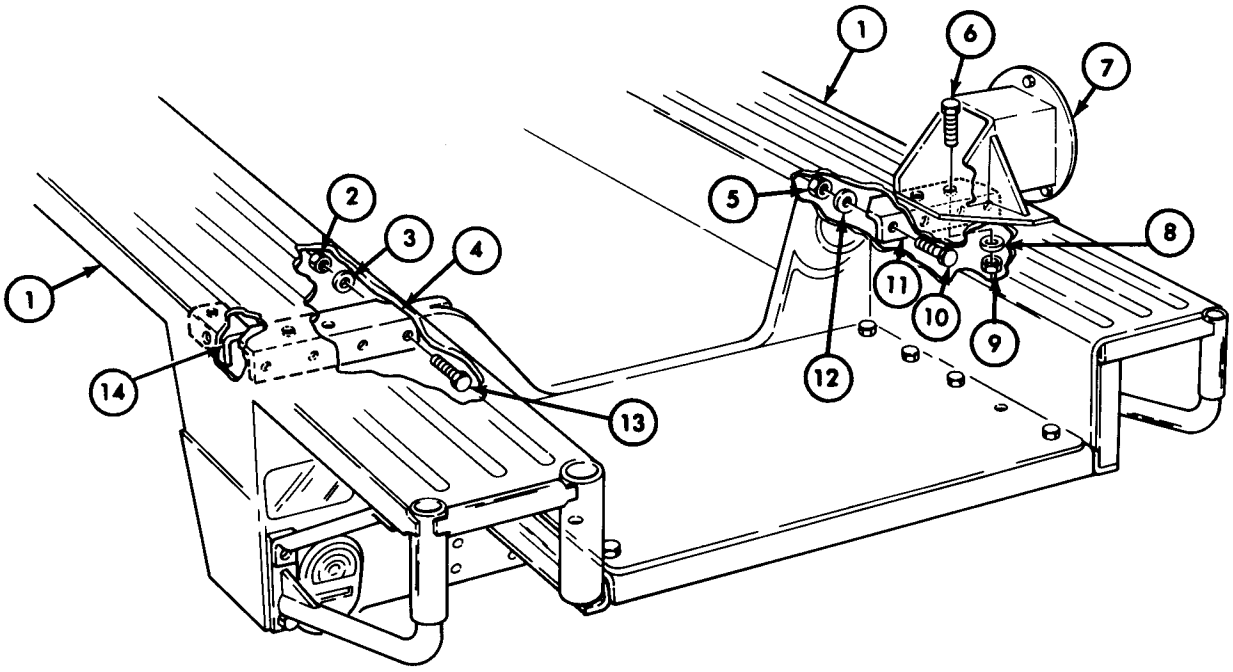

TA 156184

15-15. Body Extension Assembly Repair (Cont'd)

STEP NO.	LOCATION	ITEM	ACTION	REMARKS
17.		Extension support bracket (5)	*a.* Position on body (4) and left extension assembly (12), and aline eight holes.	
			b. Secure to body (4), left reinforcement bracket (9), and reinforcement bracket (6) with six capscrews (8), lockwashers (10), and nuts (11).	Finger tighten only.
18.		Seatbelt anchor (2)	Secure to extension support bracket (5), body (4), and reinforcement bracket (6) with capscrew (1), two new lockwashers (3), and one nut (7).	Finger tighten only.
19.		Seatbelt anchor (16)	Secure to extension support bracket (6) and left extension lower flange (14) with capscrew (17), new lockwasher (15), and nut (13).	Finger tighten only.

15-15. Body Extension Assembly Repair (Cont'd)

STEP NO.	LOCATION	ITEM	ACTION	REMARKS

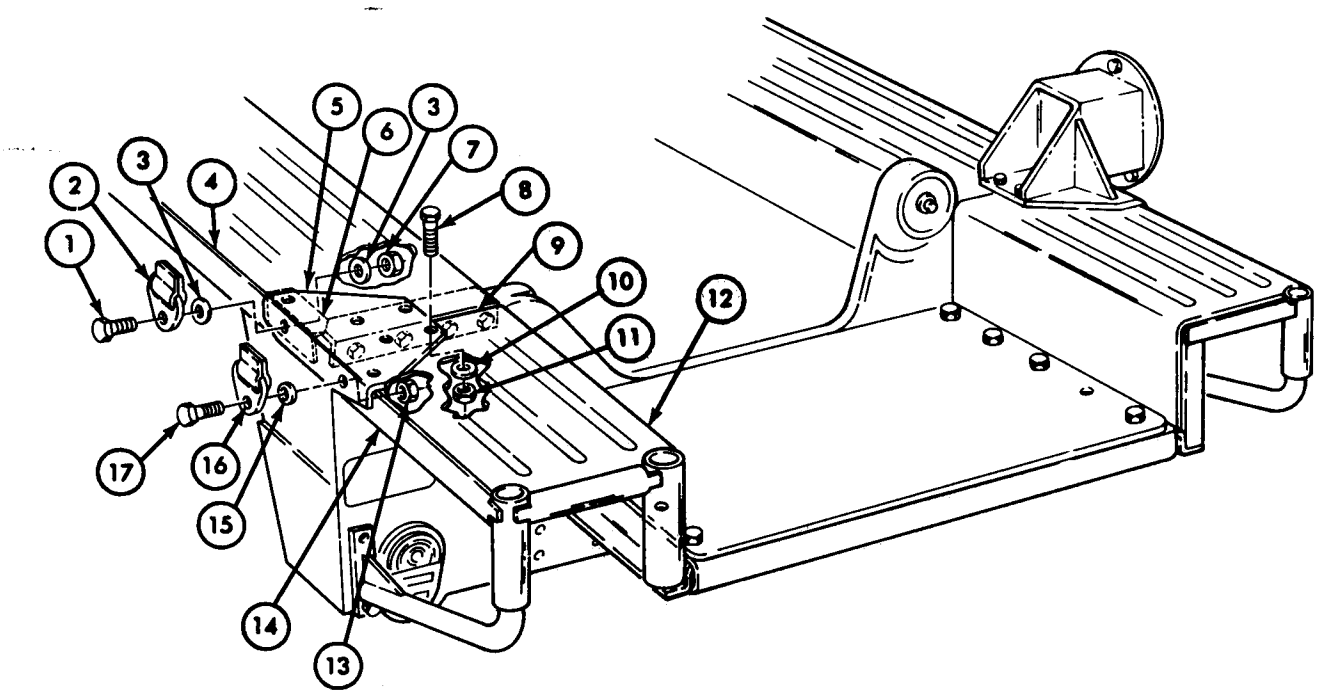

TA 156185

15-15. Body Extension Assembly Repair (Cont'd)

STEP NO.	LOCATION	ITEM	ACTION	REMARKS
20.		Outer brace (2)	*a.* Secure slotted end to left extension lower flange (1) with capscrew (3), lockwasher (5), and nut (6).	Finger tighten only.
			b. Secure opposite end to body (8) with capscrew (7), new lockwasher (9), and nut (10).	Finger tighten only.
21.		Outer brace (2)	Repeat step 20 to install on right extension assembly (4).	
22.		Inner brace (13)	*a.* Secure slotted end to left extension assembly (14) and center platform (16) with capscrew (15), new lockwasher (17), and nut (18).	Finger tighten only.
			b. Secure opposite end to body (8) with capscrew (19), lockwasher (20), and nut (12).	Finger tighten only.
23.		Inner brace (13)	Repeat step 22 to install on right extension assembly (4).	
24.		Extension assembly attaching hardware	Tighten securely.	
25.		Two seatbelt anchor capscrews (11)	Tighten 10-15 lb-ft (13-20 N•m).	

15-15. Body Extension Assembly Repair (Cont'd)

STEP NO.	LOCATION	ITEM	ACTION	REMARKS

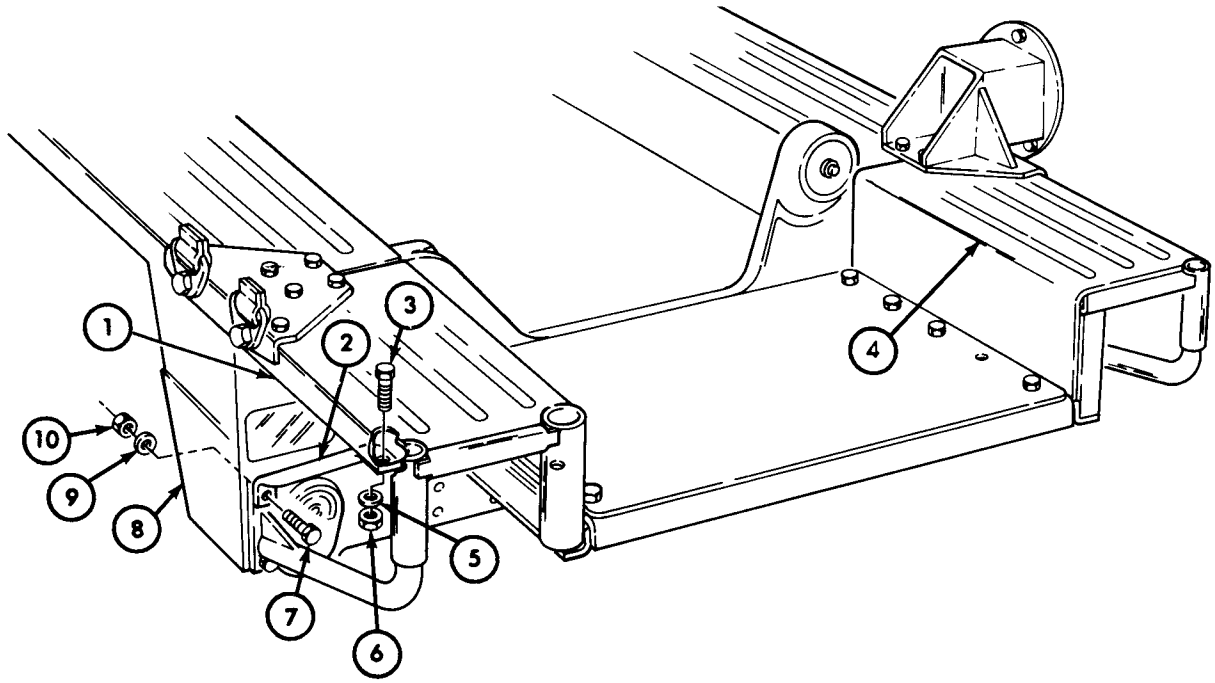

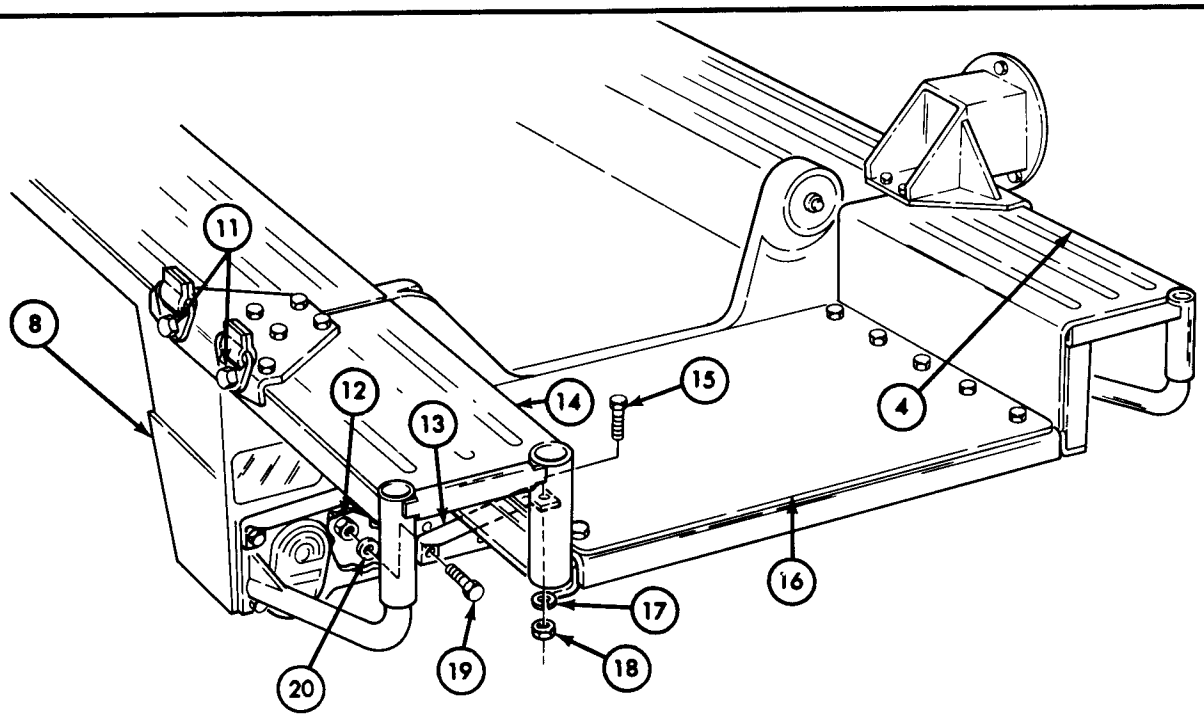

END OF TASK!

TA 156186

Section IV. WINDSHIELD ASSEMBLY AND WIPER MOTOR

15-16. General

Windshield assembly can be folded forward and removed from body. Glass is of high strength, one-piece safety type, mounted in the frame in a molded rubber weatherstrip. Electric windshield wiper motor is attached to lower part of windshield.

15-17. Tabulated Data

Tabulated data for electrical type windshield wiper motor is provided below:

Table 15-2. Tabulated Data — Windshield Wiper Motor

Manufacturer	Bosch and Prestolite

15-18. Windshield Assembly and Wiper Motor Maintenance Task Summary

15-19. Windshield Assembly Repair

This task covers:

a. Inspection and Repair
b. Seal Removal
c. Cleaning
d. Installation

INITIAL SETUP:

Applicable Models
All

Test Equipment
None

Special Tools
None

Materials/Parts
Sealer (NSN 8040-00-877-9872)
Adhesive (NSN 8040-00-262-9031)
Drycleaning solvent

Personnel Required
One mechanic

Manual References
TM 9-2320-218-10
TM 9-2320-218-20-1-2
TM 9-2320-218-34P
FM 43-2

Equipment Condition Reference	Condition Description
TM 9-2320-218-10	Parking brake set.
TM 9-2320-218-20-1-2	Windshield assembly removed.

Special Environmental Conditions
Clean, well-ventilated work area.

General Safety Instructions
Drycleaning solvent is flammable, and will not be used near an open flame.

STEP NO.	LOCATION	ITEM	ACTION	REMARKS
		a. INSPECTION AND REPAIR		
		NOTE		
		Replace the windshield panel (1) if it cannot be repaired.		
1.		Windshield panel (1)	Inspect for dents, bends, and cracks.	Repair if dented, bent, or or cracked (see FM-43-2).
2.	Lower edge (2) of windshield panel (1)	Two hinges (3)	Inspect for looseness, bends, and cracks.	Tighten attaching screws if loose.
				Replace if bent or cracked.
3.		Seal (4)	*a.* Inspect for tears or hardening.	Replace if torn or hardened.

15-19. Windshield Assembly Repair (Cont'd)

STEP NO.	LOCATION	ITEM	ACTION	REMARKS
			b. Inspect to make sure seal (4) does not cover part of two heater defroster openings (5).	If defroster openings (5) are covered, cut away seal (4) until openings (5) are exposed.
4.	Top edge (6) of windshield panel (1)	Two soft top angle brackets (9)	Inspect for looseness, bends, and cracks.	Tighten attaching screws if loose. Replace if bent or cracked.
5.		Windshield hood catch (8)	Inspect for looseness, bends, and cracks.	Tighten attaching screws if loose. Replace if bent or cracked.
6.		Two bumpers (7)	Inspect for looseness, cracks, or hardness.	Tighten screw if loose. Replace if cracked, or hard.

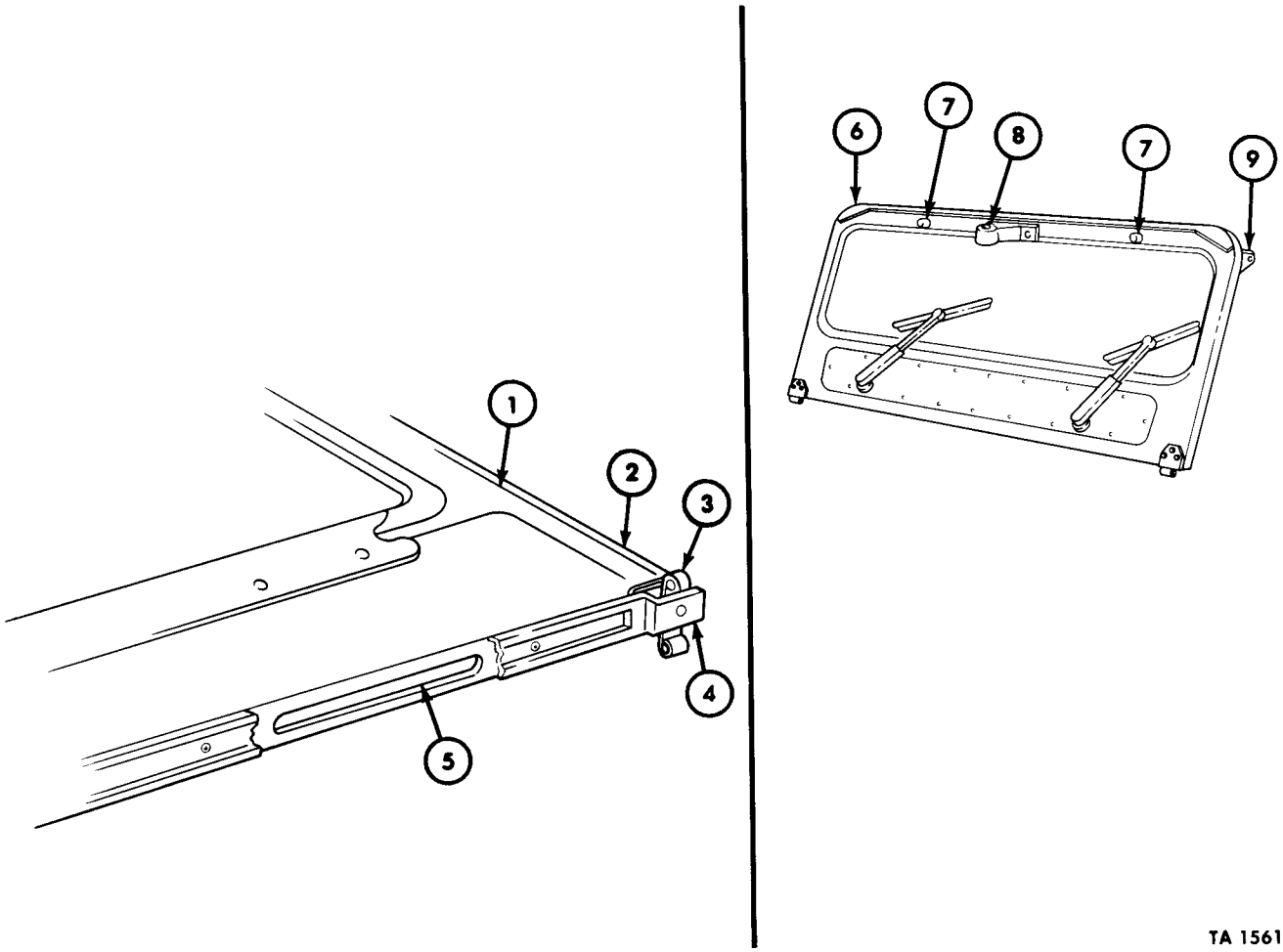

TA 156187

15-19. Windshield Assembly Repair (Cont'd)

STEP NO.	LOCATION	ITEM	ACTION	REMARKS
	b. SEAL REMOVAL			
7.	Seal (4) to windshield panel (1)	Six screws (6) and flat washers (5)	Remove.	
8.		Seal (4)	Remove from windshield panel (1).	Use scraper.
9.	Two hinges (2) to windshield panel (1)	Ten self-tapping screws (3)	Remove.	
10.		Two hinges (2)	Remove from windshield panel (1).	
	c. CLEANING			
11.		Two hinges (2) and windshield panel (1)	*a.* Scrub mating surfaces with wire brush to remove excess sealer.	
			WARNING Drycleaning solvent is flammable and will not be used near an open flame. A fire extinguisher will be kept nearby when the solvent is used. Use only in well-ventilated places. Failure to do this may result in injury to personnel and/or damage to equipment.	
			b. Clean with drycleaning solvent to remove grease.	
	d. INSTALLATION			
12.		Sealer	*a.* Apply light coat to mating surface of two hinges (2).	
			b. Allow to dry until tacky to touch.	

15-19. Windshield Assembly Repair (Cont'd)

STEP NO.	LOCATION	ITEM	ACTION	REMARKS
13.		Two hinges (2)	Position to windshield panel (1) and secure with ten self-tapping screws (3).	
14.		Adhesive	*a.* Apply light coat to contact surface of seal (4). *b.* Allow to dry until tacky to touch.	
15.		Seal (4)	Place on windshield panel (1) and secure with six screws (6) and flat washers (5).	Make sure two defroster openings (7) are not covered. If covered, cut cut away seal (4) until exposed.

WARNING

Drycleaning solvent is flammable and will not be used near an open flame. A fire extinguisher will be kept nearby when the solvent is used. Use only in well-ventilated places. Failure to do this may result in injury to personnel and/or damage to equipment.

16.		Seal (4) and windshield panel (1)	Remove excess adhesive with drycleaning solvent.

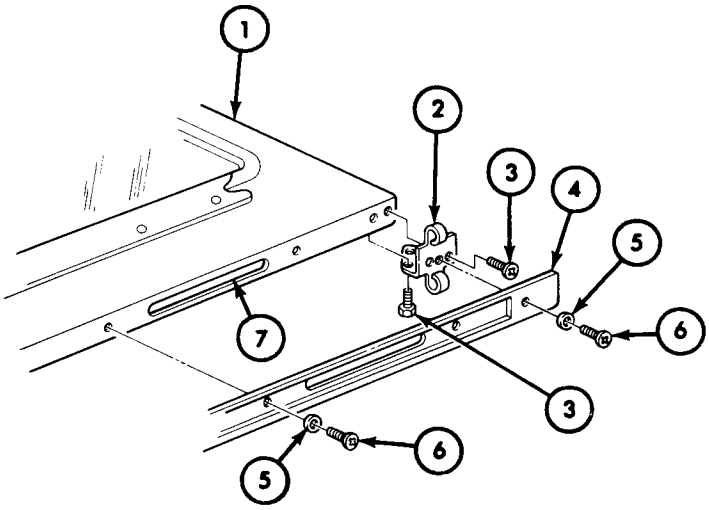

END OF TASK!

FOLLOW-ON TASK: Install windshield assembly (TM 9-2320-218-20-1-2).

TA 156188

15-20. Windshield Glass and Seal Maintenance

This task covers:

a. Inspection
b. Removal
c. Installation

INITIAL SETUP:

Applicable Models
All

Equipment Condition

Reference	Condition Description
TM 9-2320-218-10	Parking brake set.
TM 9-2320-218-20-1-2	Windshield wiper arm removed.
TM 9-2320-218-20-1-2	Inside rearview mirror removed.

Test Equipment
None

Special Tools
None

Special Environmental Conditions
None

Materials/Parts
Cord
Liquid soap
Pressure hand oiler (NSN 4930-00-985-2604)
Adhesive (NSN 8040-00-262-9031)

Personnel Required
One mechanic
One assistant

General Safety Instructions
None

Manual References
TM 9-2320-218-10
TM 9-2320-218-20-1-2
TM 9-2320-218-34P

STEP NO.	LOCATION	ITEM	ACTION	REMARKS
a. INSPECTION				
		NOTE Minor windshield glass defects that do not restrict the driver's visibility are acceptable.		
1.	Windshield (2)	Glass (1)	Inspect for scratches, cracks, milky, foggy, and stained conditions.	Replace if scratched, cracked, milky, foggy, or stained.
2.		Seal (3)	Inspect for hardening and cracks.	Replace if hard or cracked.

15-20. Windshield Glass and Seal Maintenance (Cont'd)

STEP NO.	LOCATION	ITEM	ACTION	REMARKS
	b. REMOVAL			
		NOTE		
		Steps 3 and 4 are required only if vehicle is equipped with a hot water heater kit -25° F (-32° C) or a winterization kit -65° F (-54° C).		
3.	Two defroster deflectors (5) to windshield (2)	Eight screws (4)	Remove.	
4.		Two defroster deflectors (5)	Remove from windshield (2).	
		NOTE		
		Assistant and mechanic must work on same area of glass at same time during step 5.		
5.	Inside vehicle at windshield seal (3)	Mounting lip (6)	Starting at upper corner, pull away from windshield (2) while pushing glass (1) out.	
6.		Glass (1) and seal (3)	Remove from windshield (2).	
7.		Seal (3)	Remove from glass (1).	Note position of seal (3) on glass (1) for step 8.

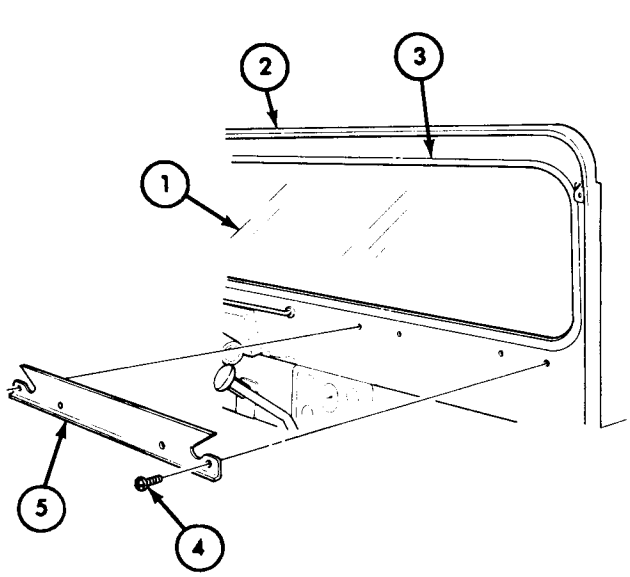

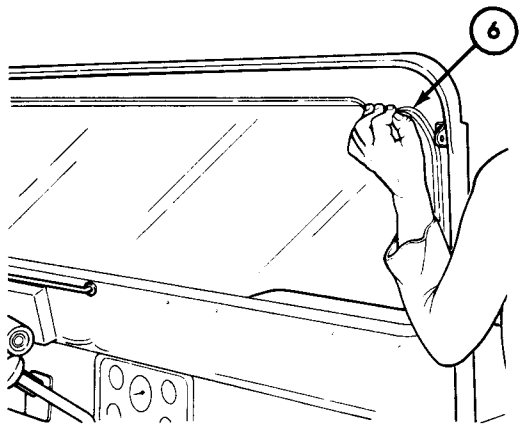

TA 156189

15-20. Windshield Glass and Seal Maintenance (Cont'd)

STEP NO.	LOCATION	ITEM	ACTION	REMARKS
	c. INSTALLATION			
		NOTE • Clean off excess adhesive if reinstalling used seal. • High-strength glass must be positioned and installed so the trademark can be read from outside of vehicle.		
8.		Seal (5)	Install on glass (3).	Be sure glass (3) is seated fully into seal slot (4).
9.		Cord (7)	Install under mounting lip (1), crossing in center top position.	Cord (7) must be long enough to go around glass (3) to provide 1 ft (305 mm) on each end for pulling.
10.		Liquid soap	Apply to entire surface of mounting lip (1).	Soap will serve as a lubricant.
11.	Outside vehicle at top of windshield panel (6)	Seal (5)	Place against edge of fence (2).	
		NOTE Assistant must push glass during step 12.		
12.		Glass (3)	Push inward and upward.	
13.	Inside vehicle at windshield panel (6)	Cord (7)	*a.* Pull steadily on one end to slide mounting lip (1) over fence (2), until glass and seal are installed. *b.* Wipe off excess soap.	Steps 12 and 13 must be performed at same time.

15-20. Windshield Glass and Seal Maintenance (Cont'd)

STEP NO.	LOCATION	ITEM	ACTION	REMARKS
14.		Sealer	Insert tip of pressure hand oiler and inject adhesive between seal (5) and glass (3) and seal (5) and windshield panel (6).	

NOTE

Step 15 is required only if vehicle is equipped with a hot water heater kit -25° F (-32° C) or a winterization kit -65° F (-54° C).

15.		Two defroster deflectors (8)	Secure to windshield panel (6) with eight screws (9).	

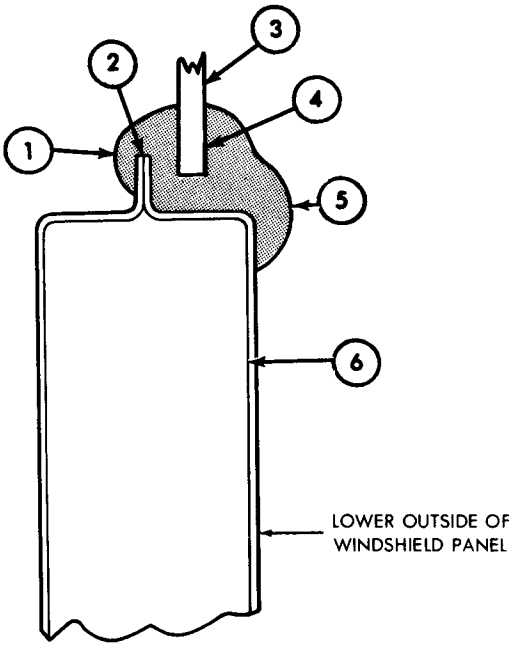

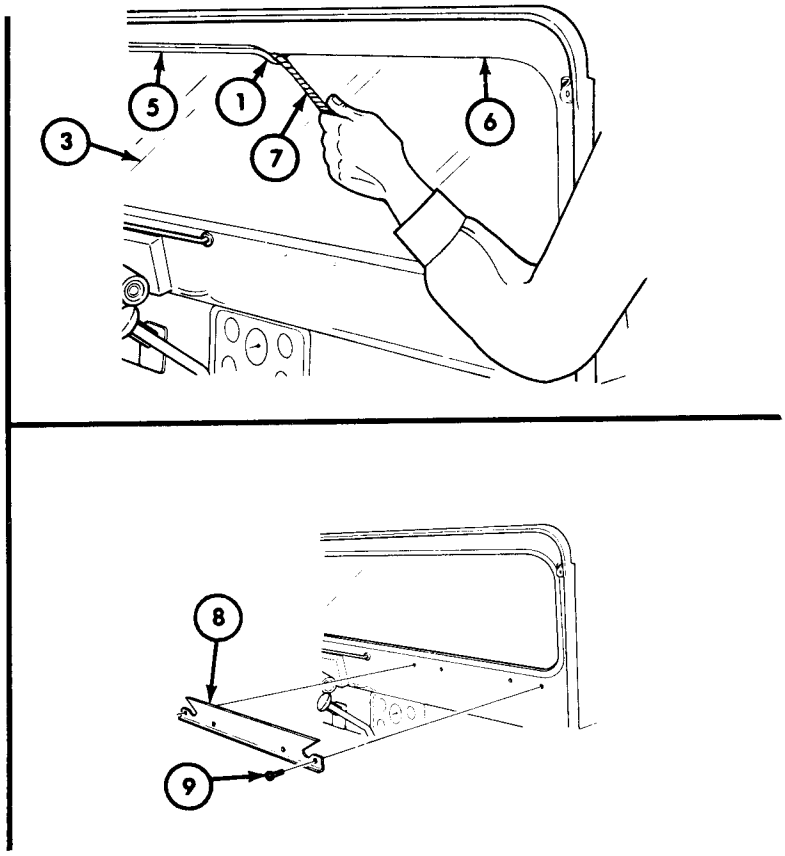

END OF TASK!

FOLLOW-ON TASKS:
- Replace windshield wiper arm (TM 9-2320-218-20-1-2).
- Replace inside rearview mirror (TM 9-2320-218-20-1-2).

TA 156190

15-21. Windshield Wiper Motor Repair

Removal, cleaning, inspection, and installation instructions for the windshield wiper motor gear are found in "Windshield Wiper Motor Gear Replacement Instructions (12255453)". These instructions are packaged with each gear replacement kit.

Section V. SEATS, SOFT TOP, SIDE CURTAINS, WINDOWS, AND DOORS

15-22. General

The M151A2 utility model is equipped with a soft top, rear curtain, and window. Doors and side curtains are available in a special purpose kit. A special soft enclosure consisting of doors, side, and top curtains is included for all M718A1 ambulance models.

15-23. Seat, Soft Top, Side Curtains, Windows, and Doors Maintenance Task Summary

15-24. Front and Rear Seat Repair

Procedures for straightening and repair of front and rear seats can be found in FM 10-16.

15-25. Soft Top, Side Curtains, and Door Repair

This task covers:

a. Inspection *b. Repair*

INITIAL SETUP:

Applicable Models	Equipment Condition Reference	Condition Description
M151A2, M718A1	TM 9-2320-218-10	Parking brake set.

Test Equipment

None

Special Tools

Scrub brush
Sewing machine (NSN 3530-00-892-4651)

Special Environmental Conditions

None

Materials/Parts

Cloth roll — vinyl coated nylon (NSN 8305-00-616-0022)
Cloth roll — cotton duck (NSN 8305-00-170-3903)
Thread — polyester (NSN 8310-00-988-1301)
Mild detergent

Personnel Required

One mechanic

General Safety Instructions

None

Manual References

TM 9-2320-218-10
TM 9-2320-218-20-1-2
TM 9-2320-218-34P

STEP NO.	LOCATION	ITEM	ACTION	REMARKS
a. INSPECTION				
1.		Soft top (6), two side curtains (7) and two doors (8)	*a.* Inspect for tears, punctures, and seam rips.	Repair if tears, punctures, or rips are minor, otherwise, replace.
			b. Inspect for dirt or mildew.	Wash if dirty or mildewed, using mild detergent and scrub brush. Rinse thoroughly and dry before storing.

NOTE

Removal of soft top, door frames, and door curtains is covered in TM 9-2320-218-10. Removal of M718A1 ambulance top and side curtains is covered in TM 9-2320-218-20-1-2.

15-25. Soft Top, Side Curtains, and Door Repair (Cont'd)

b. REPAIR

2.	Vinyl coated nylon cloth	Cut vinyl patch (2) to approximate shape of damage.	Allow at least 1 in. (25.4 mm) of overlap around around damaged area.
3.	Cotton duck cloth	Cut cotton patch (3) same size as vinyl patch.	
4.	Cotton patch (3) and vinyl patch (2)	*a.* Center cotton patch over damaged area on interior side of fabric (1).	
		b. Place vinyl patch (2) over cotton patch (3) and aline edges.	
		c. Sew vinyl patch (2) and cotton patch (3) in place.	Use sewing machine. Use polyester thread. Sew 7 ± 1 stitches per inch (5).
		d. Sew damaged area with zigzag pattern (4).	

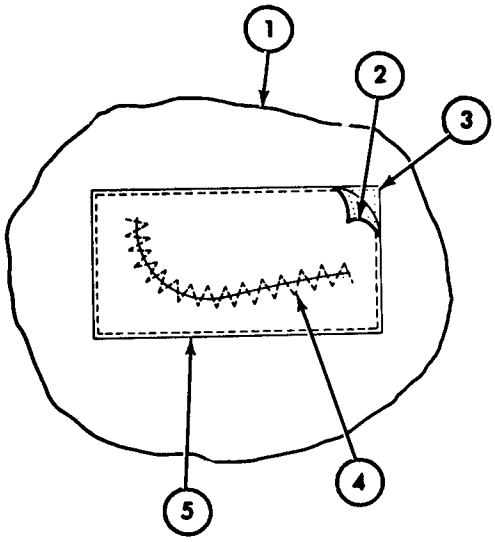

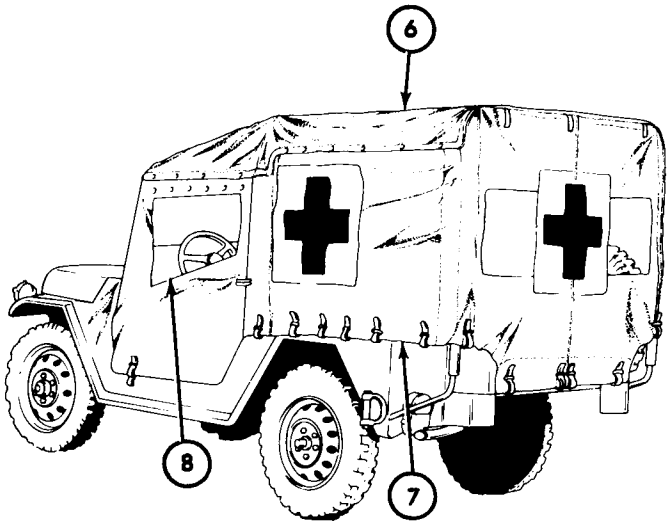

END OF TASK!

TA 156191

15-26. Curtain and Door Window Repair

This task covers:

a. Inspection
b. Repair
c. Removal
d. Fabrication and Installation

INITIAL SETUP:

Applicable Models
M151A2, M718A1

Equipment Condition Reference
TM 9-2320-218-10

Condition Description
Parking brake set.

Test Equipment
None

Special Tools
Sewing machine (NSN 3530-00-892-4651)
Knife
Straight edge

Special Environmental Conditions
Well-ventilated work area.

Materials/Parts
Waterless soap (NSN 8520-00-262-7177)
Thread — polyester (NSN 8310-00-988-1301)
Adhesive (NSN 8040-00-273-8697)
Sheet plastic

Personnel Required
One mechanic

General Safety Instructions
Adhesive is flammable and will not be used near an open flame.

Manual References
TM 9-2320-218-10
TM 9-2320-218-20-1-2
TM 9-2320-218-34P

STEP NO.	LOCATION	ITEM	ACTION	REMARKS
a. INSPECTION				
1.		Windows (1)	Inspect for scratches, fogging, and cracks.	Repair if scratched or fogged. Replace if cracked.
b. REPAIR				
2.		Windows (1)	Remove light scratches and fogging with waterless soap and soft cloth.	

15-26. Curtain and Door Window Repair (Cont'd)

STEP NO.	LOCATION	ITEM	ACTION	REMARKS
		NOTE		
		Removal of soft top and doors is covered in TM 9-2320-218-10. Removal of M718A1 ambulance side and rear curtains is covered in TM 9-2320-218-20-1-2).		
	c. REMOVAL			
		NOTE		
		Steps 3, 4, and 5 apply to M151A2 windows, and windows in M718A1 ambulance models with cotton duck cloth rear curtains.		
3.	Interior side of rear curtain (4)	Window (1)	Cut three rows of stitching (2).	Use knife.
4.		Reinforcement tape (3)	Remove.	
5.		Window (1)	Remove from rear curtain (4).	

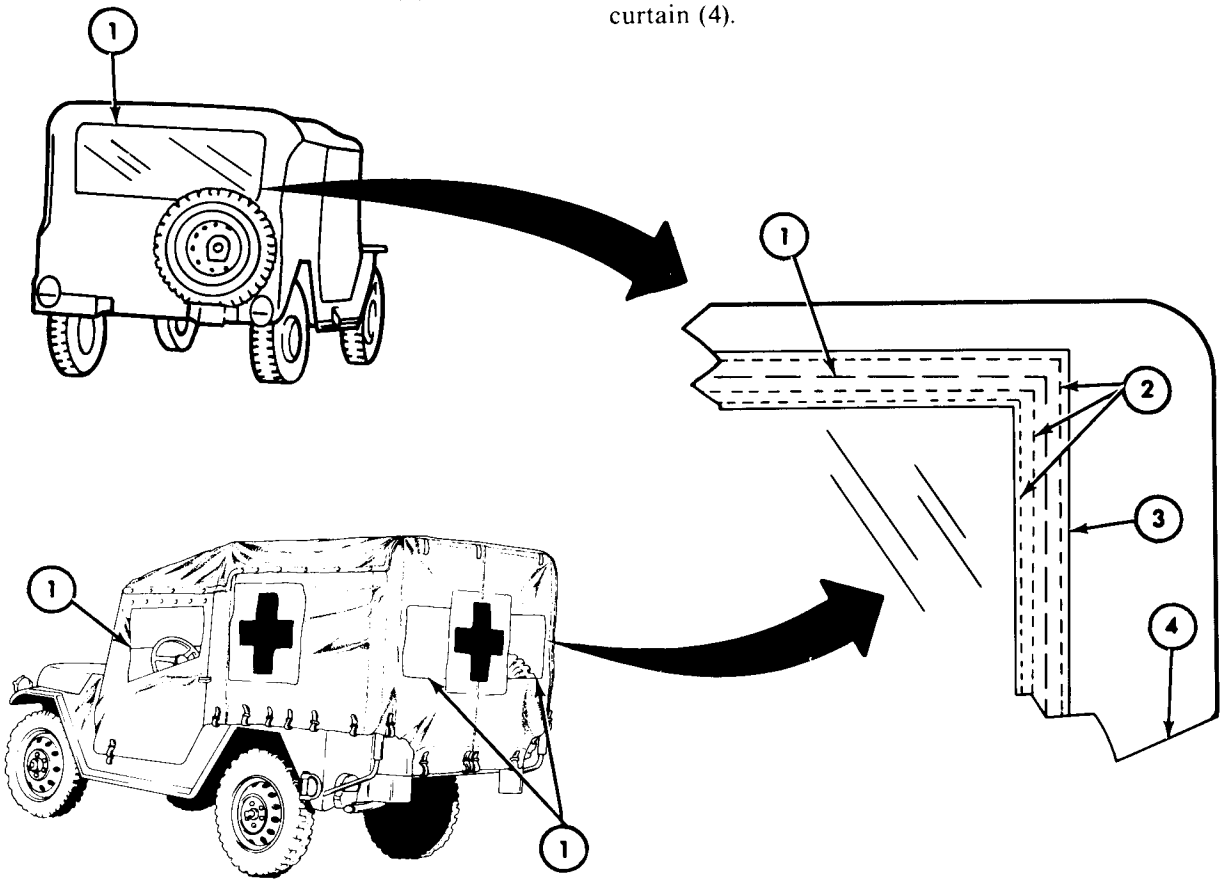

TA 156192

15-26. Curtain and Door Window Repair (Cont'd)

STEP NO.	LOCATION	ITEM	ACTION	REMARKS
		NOTE		
		Steps 6 and 7 apply only to M718A1 ambulance models with vinyl coated nylon rear curtain.		
6.	Interior side of rear curtain (6)	Window (2)	Using straight edge as a guide, cut all four sides of window (2) at point inside opening (5).	Use knife.
7.		Window (2)	Remove from rear curtain (6).	
8.	Interior side of door (1)	Window (2)	Cut two rows of stitching (3).	Use knife.
9.		Reinforcement tape (4)	Remove.	
10.		Window (2)	Remove from door (1).	
	d. FABRICATION AND INSTALLATION			
11.		Sheet plastic	*a.* Scribe and cut new door window (2).	Use damaged window (2) from step 10 as template.
			b. Position window (2), followed by reinforcement tape (4), to inside of door (1).	Use reinforcement tape (4) from step 9.
			c. Using sewing machine, sew tape (4) and window (2) to door (1)	Sew two rows of stitching (3), six stitches per inch (25.4 mm).

15-26. Curtain and Door Window Repair (Cont'd)

STEP NO.	LOCATION	ITEM	ACTION	REMARKS
		NOTE		
		Steps 12, 13, and 14 apply only to M718A1 ambulance models with vinyl coated nylon rear curtain.		
12.	Interior side of rear curtain (6)	Sheet plastic	Scribe and cut new window 16-1/2 in. x 16-1/2 in. (419 mm x 419 mm).	

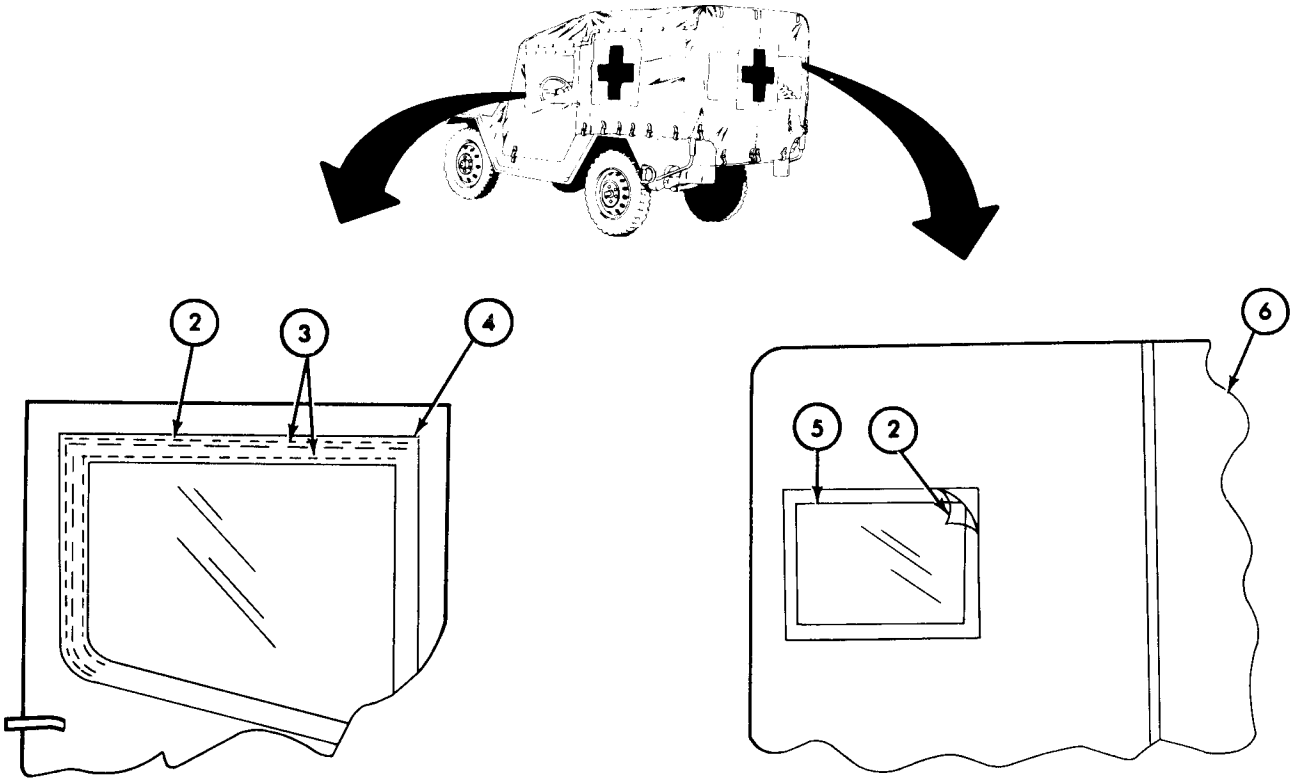

TA 156193

15-26. Curtain and Door Window Repair (Cont'd)

STEP NO.	LOCATION	ITEM	ACTION	REMARKS
		NOTE		
		Steps 12, 13, and 14 apply only to M718A1 ambulance models with vinyl coated nylon rear curtain.		
12.	Interior side of rear curtain (6)	Sheet plastic	Scribe and cut new window 16-1/2 in. x 16-1/2 in. (419 mm x 419 mm).	

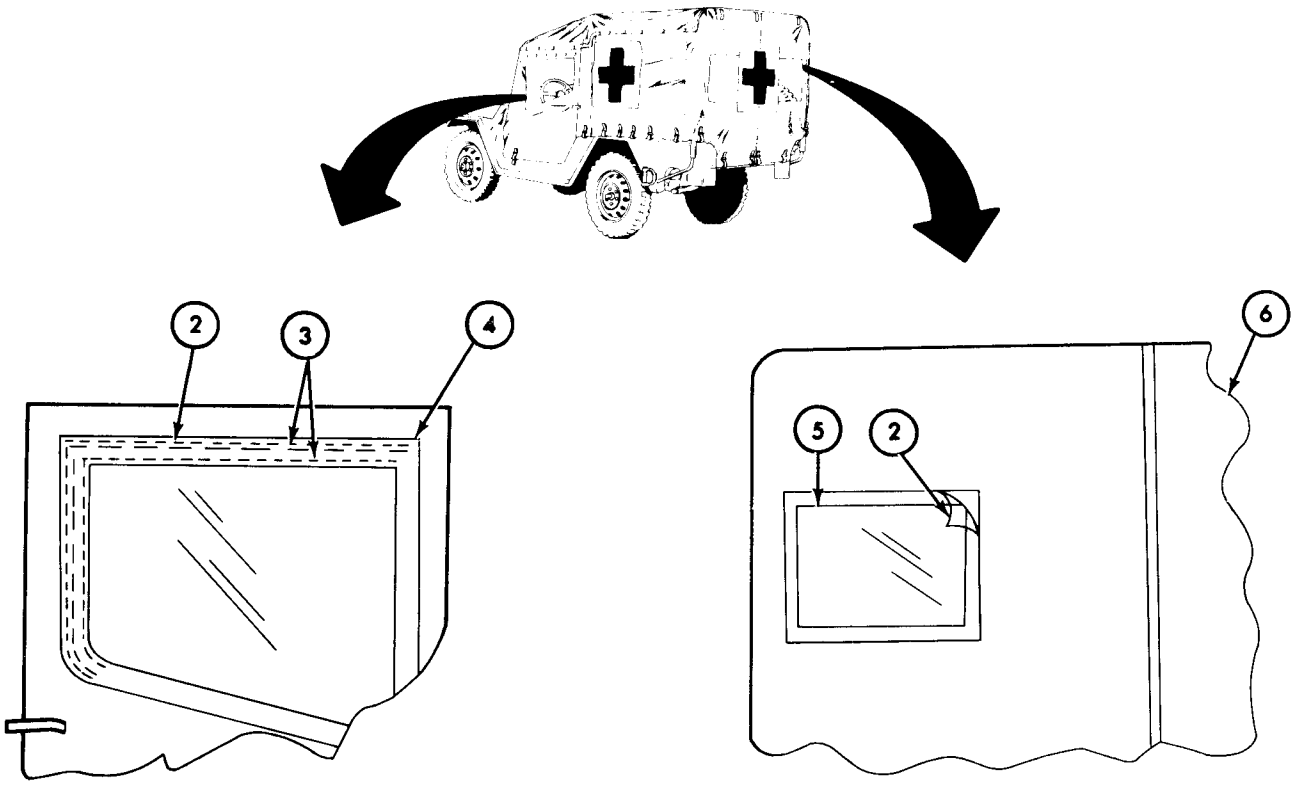

TA 156193

15-26. Curtain and Door Window Repair (Cont'd)

STEP NO.	LOCATION	ITEM	ACTION	REMARKS
		WARNING		
		Vapors from adhesive are flammable and will not be used near an open flame. A fire extinguisher will be kept nearby when the adhesive is used. Use only in well-ventilated places. Failure to do so may result in injury to personnel and/or damage to equipment.		
13.		Adhesive	*a.* Apply light coat to remaining portion of old window (3).	
			b. Apply light coat on four outside edges of new window (2).	Width of application must be no more than 1 in. (25.4 mm) from edge.
			c. Allow to dry until tacky.	
14.		New window (2)	*a.* Place over window opening (1).	
			b. Join surfaces with firm pressure.	
		NOTE		
		Steps 15 and 16 apply only to M151A2 windows, and windows in M718A1 ambulance models with cotton duck cloth rear curtains.		
15.		Sheet plastic	Scribe and cut new window (5).	Use damaged window from step 5 as template.
16.		Window (5)	*a.* Position new window, (5), followed by reinforcement tape (4) to inside of rear curtain (7).	
			b. Sew tape (6) and window (5) to rear curtain (7).	Use sewing machine. Sew three rows of stitching (4), three stitches per inch (25.4 mm).

15-26. Curtain and Door Window Repair (Cont'd)

STEP NO.	LOCATION	ITEM	ACTION	REMARKS

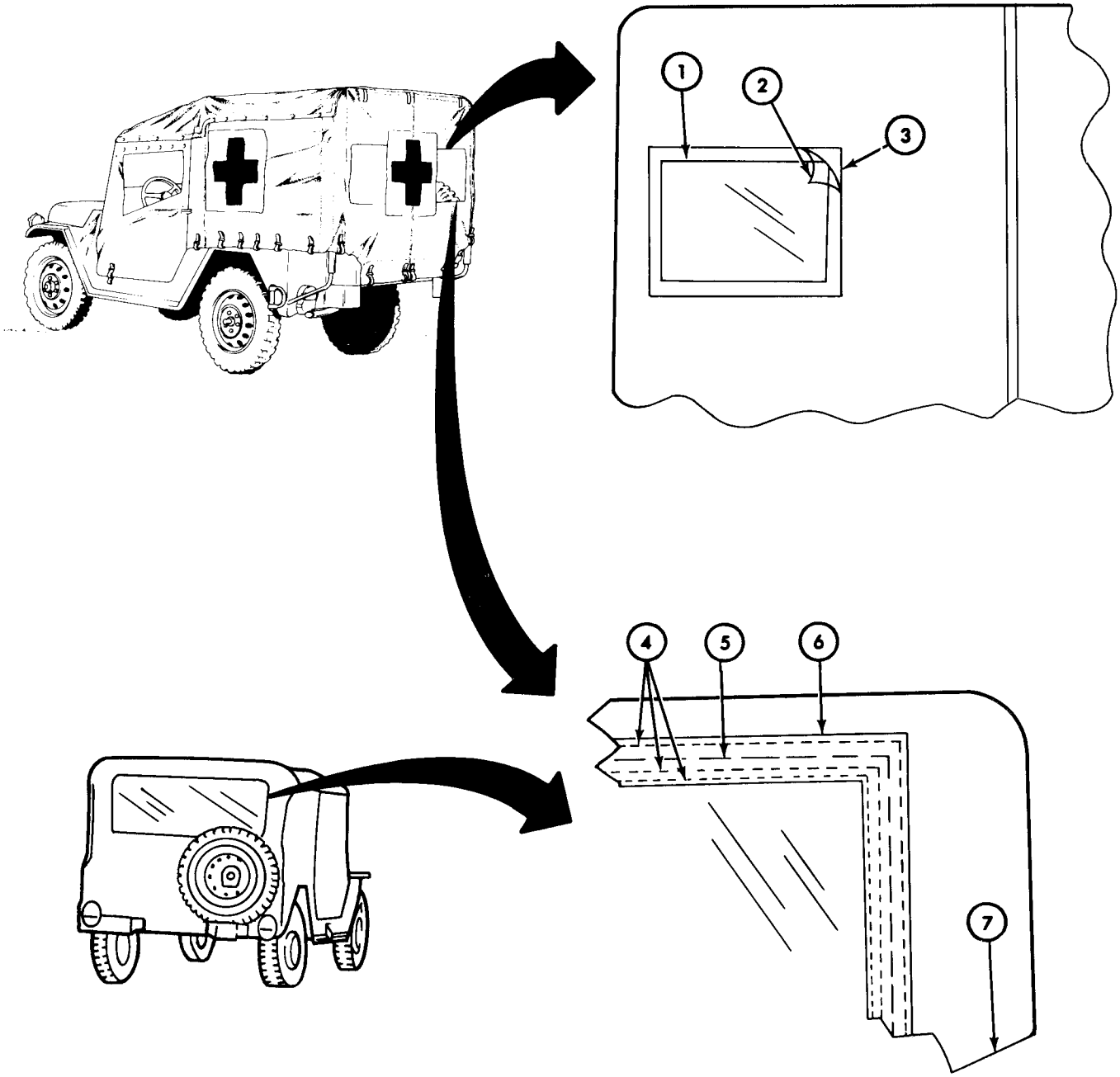

END OF TASK!

TA 156194

Section VI. BATTERY AND BATTERY CABLES

15-27. General

This section provides maintenance procedures assigned to the direct and general support levels for the battery and battery cables. To find a specific procedure, see the maintenance task summary below:

15-28. Battery and Battery Cables Maintenance Task Summary

15-29. Battery Maintenance

Procedures for cleaning and repair of batteries are covered in TM 9-6140-200-14.

15-30. Battery Cable Assembly Fabrication

This task covers:

Fabrication

INITIAL SETUP:

Applicable Models

All

Equipment Condition

Reference	Condition Description
TM 9-2320-218-10	Parking brake set.
TM 9-2320-218-20-1-1	Battery cable removed.

Test Equipment

None

Special Tools

Stripping tool (NSN 5180-00-708-3423)
Gas flame torch
Safety goggles

Special Environmental Conditions

None

Materials/Parts

Cable assembly
Rosin-core solder

Personnel Required

One mechanic

General Safety Instructions

- Keep torch away from flammable material.
- Wear goggles to protect eyes.

Manual References

TM 9-2320-218-10
TM 9-2320-218-20-1-2
TM 9-2320-218-34P

STEP NO.	LOCATION	ITEM	ACTION	REMARKS

NOTE

Fabrication procedures are the same for both ends of all battery cable assemblies. Procedure below covers one end only.

FABRICATION

1.		Battery cable (1)	Strip 5/8 in. (15.8 mm) insulation (2) from end.	Use stripping tool.
2.		Battery cable (1)	Place in vise (4).	Do not overtighten.

15-30. Battery Cable Assembly Fabrication (Cont'd)

STEP NO.	LOCATION	ITEM	ACTION	REMARKS
		WARNING • Do not use lighted torch near flammable or explosive substances. • Wear goggles to prevent eye injury.		
3.		Rosin-core solder (3)	Apply to exposed wires at end of cable (1) with gas flame torch (5).	

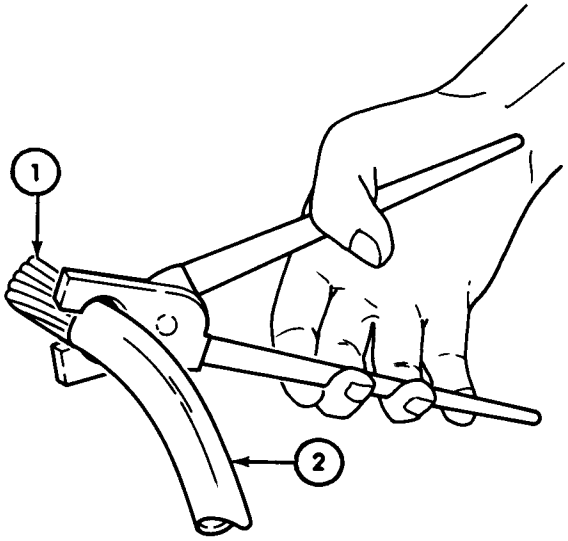

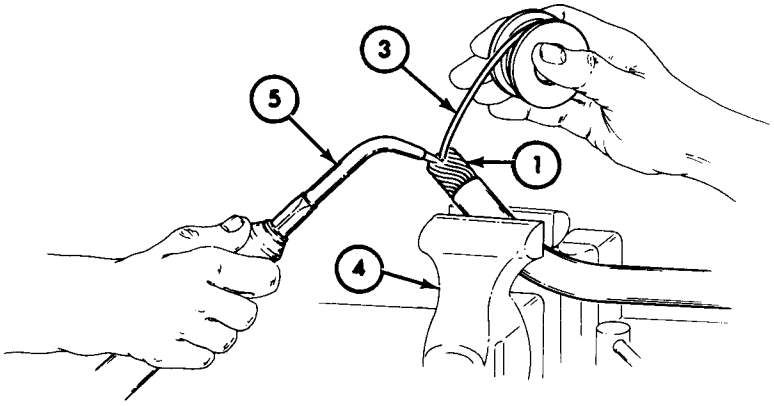

TA 156195

15-30. Battery Cable Assembly Fabrication (Cont'd)

STEP NO.	LOCATION	ITEM	ACTION	REMARKS
4.		Rosin-core solder (3)	*a.* Insert in terminal lug (2).	
			b. Heat outside of terminal lug (2) with gas flame torch (1).	
			c. Fill half of terminal lug (2) with melted solder.	
5.		Battery cable (4)	*a.* Carefully press into terminal lug (2) and hold in place until solder (3) hardens.	
			b. Remove terminal lug (2) and cable (4) from vise (5).	

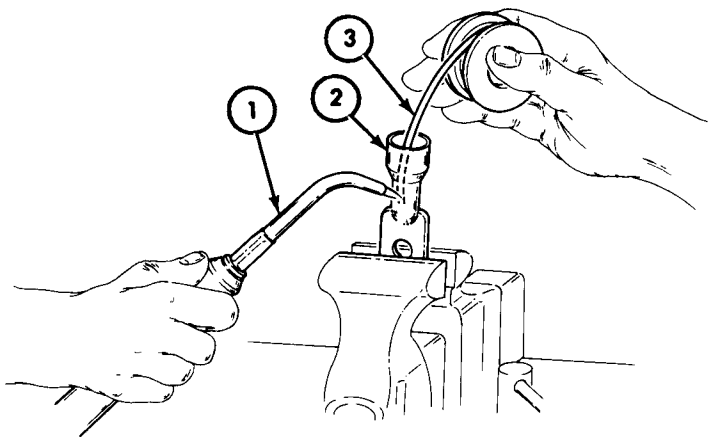

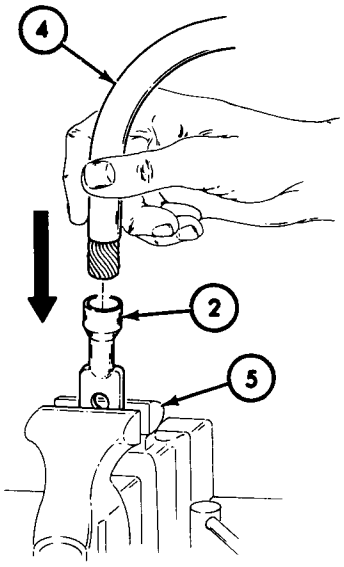

TA 156196

15-30. Battery Cable Assembly Fabrication (Cont'd)

STEP NO.	LOCATION	ITEM	ACTION	REMARKS
6.		Two circuit marker bands (6)	Attach one to each end of cable (4) next to terminal lug (2).	
7.		Part number band (7)	Attach between two circuit marker bands (6).	
8.		Insulator sleeve (8)	Slide over terminal lug (2), until lug (2) is exposed.	

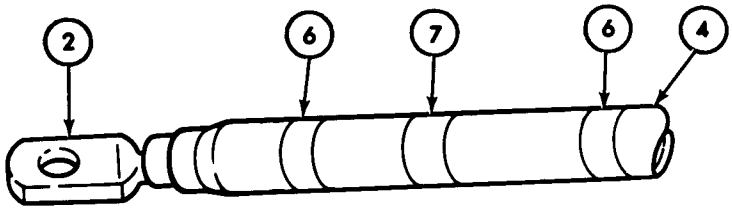

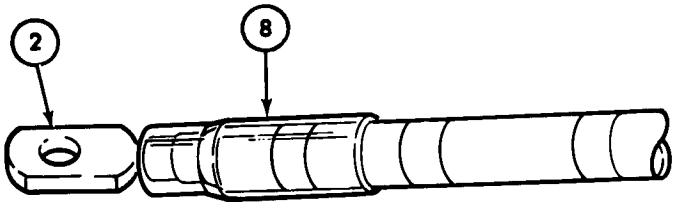

END OF TASK!

FOLLOW-ON TASK: Install battery cable (TM 9-2320-218-20-1-1).

TA 156197

Section VII. WHEELS, TIRES, AND TUBES

15-31. General

a. Wheel retaining nuts have right hand threads and can be used on both sides of the vehicle.

b. All tires are low pressure type.

15-32. Tabulated Data

Tabulated data for 1/4-ton wheels and tires is provided below:

Table 15-3. Tabulated Data — Wheels and Tires

TIRES:	
Type	Lightweight, nylon cord
Tread	Nondirectional, cross-country
Size	7:00 x 16 in. 177.3 mm x 406.3 mm)
Plies	4 (6-ply rating)
WHEELS:	
Number of mounting studs	5
Material	Steel stamping
Type	Drop-center safety rim
Weight each	20-1/2 lb. (9.2 kg)
Rim width	4-1/2 in. (114.3 mm)
Wheel nut torque	65-70 lb-ft (87.8-94.5 N•m)

15-33. Wheel, Tire, and Tube Maintenance

Procedures for maintenance of wheels, tires, and tubes are covered in TM 9-2320-218-20-1-2.

Section VIII. DIFFERENTIAL MOUNTING BRACKET PARTS KIT

15-34. Differential Mounting Bracket Parts Kit Installation

First time installation instructions for the differential mounting bracket parts kit are found in "Differential Mounting Bracket Parts Kit Installation Instructions (5704826)". These instructions are packaged with each mounting bracket kit.

CHAPTER 16

SPECIAL PURPOSE KITS

16-1. Overview

a. This chapter provides installation and maintenance information for special purpose kits. Components covered can be found in one of the following sections:

b. Each section is preceded by a list that provides a breakdown of the procedures covered in that section, and provides a paragraph and page number leading you to each task.

c. Direct and general support level installation and maintenance procedures for special purpose kits and a description of major units involved are covered in this chapter.

d. Before a special purpose kit can be authorized for use, the requirements as defined in the appropriate supply bulletin must be met. For example, SB 9-155 covers requirements for a deep water fording kit, as defined by climate, geographical location, etc.

e. Records of unit replacement of components regarding this equipment should be kept separate from those pertaining to the basic vehicle. These records should be turned in with the equipment when removed for inspection, repair, or returned to stock.

Section I. VEHICLE WINTERIZATION HEATER KIT -65°F (-54°C) MAINTENANCE

16-2. General

The complete winterization kit -65°F (-54°C) installation consists of four subassembly installations: slave receptacle, brush guard, insulation, and heater system. This section provides maintenance procedures assigned to the direct and general support levels for this kit. To find a specific procedure, see the maintenance task summary.

16-3. Description

a. The multifuel heater model 10530-A24 produces high and low heat output by mixing and burning fuel, ventilating air, and maintaining a combustion relationship to produce an adequate temperature rise and heat flow. The heater consists of a blower motor assembly (1), secondary blower housing (2), burner assembly (3), fuel control valve (4), ignition control unit (5), flame detector switch (6), and electrical connector assembly (7).

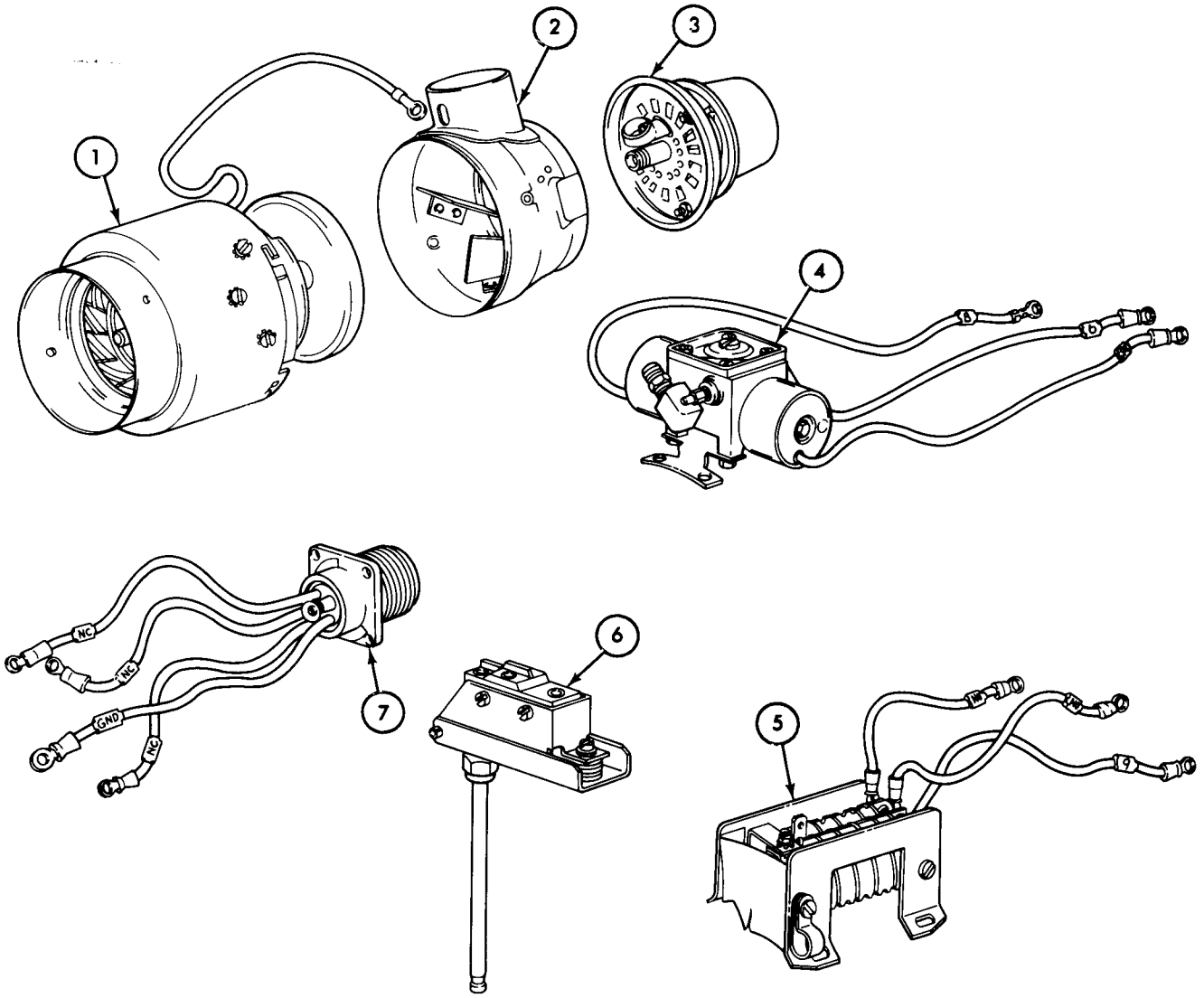

TA 156836

b. The heater can be manually controlled from a heater control unit operating from a 24V DC power source or automatically controlled from an alternate safety valve and thermostat control. The fuel supply is pumped at 3-15 psi (21-103 kPa) from an engine fuel pump or from an electric fuel pump. The heater is equipped with an overheat thermostatic control designed to shut off the fuel supply when the temperature exceeds safe limitations.

16-4. Tabulated Data — Vehicle Winterization Heater Kit -65°F (-54°C)

Tabulated data for -65°F (-54°C) heater assembly is found in table 16-1.

Table 16-1. Tabulated Data — Vehicle Winterization Heater Kit -65° F (-54° C)

	STANDARD	METRIC
Manufacturer	Stewart-Warner	
Manufacturer model	South Wind 10530-A24	
Weight	19 lb	8.626 kg
Overall length	17.1 in	434.33 mm
Overall width	16.21 in	411.72 mm
Overall height	11 in	279.39 mm
Input voltage	24V DC (nominal) range: 20-28.5V DC	
Current consumption:		
Above 45°F (7.2°C)		
Starting	11 amp	
Running	6 amp	
Below 45°F (7.2°C)		
Starting	15 amp	
Running	10 amp	
Fuel pressure	3-15 psi	21-103 kPa
Fuel consumption:		
High heat	0.039 ± .004 lb/min	25 ± 2 cc/min
Low heat	0.022 ± .003 lb/min	15.5 ± 1 cc/min
Nominal heat output:		
High	30,000 btu/hr	
Low	14,000 btu/hr	
Total available output (including exhaust)	42,000 btu/hr	
Temperature rise (minimum):		
High	220°F	104°C
Low	75°F	24°C
Overheat switch setting (maximum)	600°F	316°C
Operating temperature range	-65°F-100°F	-54°C-38°C

16-5. Service Upon Receipt of Material

a. Inspection and Cleaning. When a new or reconditioned kit is received, make sure it has been properly prepared for service and that all necessary parts are present. Inspect all assemblies, subassemblies, and parts for proper assembly and condition. If exterior surfaces are coated with rust preventive compound, remove with drycleaning solvent.

WARNING

Drycleaning solvent is flammable and will not be used near an open flame. A fire extinguisher will be kept nearby when solvent is used. Use only in well-ventilated places. Failure to do this will result in injury to personnel and/or damage to equipment.

16-5. Service Upon Receipt of Material (Cont'd)

b. Correction of Deficiencies.

(1) Minor deficiencies found during inspection, servicing, or installation will be corrected by personnel performing installation.

(2) Report serious deficiencies which appear to involve unsatisfactory design of materiel on SF 368 Quality Deficiency Report.

16-6. Winterization Kit -65°F (-54°C) Maintenance Task Summary

16-6. Winterization Kit -65°F (-54°C) Maintenance Task Summary (Cont'd)

16-7. Preliminary Operations

The procedures for vehicle preparation and drilling instructions can be found in "Truck, 1/4 Ton, 4x4, Winterization Kit Modification and Installation Instructions (12275144)" accompanying winterization kit -65°F (-54°C). To obtain additional copies of modification and installation instructions, write to: Commander, U.S. Army Tank-Automotive Command, ATTN: DRSTA-MB, Warren, Michigan 48090.

16-8. Heater Assembly and Related Components

The installation procedure for heater assembly and related components can be found in "Truck, 1/4 Ton, 4x4, Winterization Kit Modification and Installation Instructions (12275144)" accompanying winterization kit -65°F (-54°C). To obtain additional copies of modification and installation instructions, write to: Commander, U.S. Army Tank-Automotive Command, ATTN: DRSTA-MB, Warren, Michigan 48090.

16-9. Vehicle Insulation

This task covers:

a. Installation *b. Removal*

INITIAL SETUP:

Applicable Models
M151A2

Equipment Condition Reference / **Condition Description**

Equipment Condition Reference	Condition Description
TM 9-2320-218-10	Parking brake set.
TM 9-2320-218-20-1-2	Front seats removed.
TM 9-2320-218-20-1-2	Rear seats removed.

Test Equipment
None

Special Tools
None

Special Environmental Conditions
Heated work area.

Materials/Parts
Adhesive (NSN 8040-00-262-9031)

Personnel Required
One mechanic

General Safety Instructions
None

Manual References
TM 9-2320-218-10
TM 9-2320-218-20-1-2
TM 9-2320-218-34P

STEP NO.	LOCATION	ITEM	ACTION	REMARKS

NOTE

All insulation panels are installed basically the same. Panels included are as follows: Top wheelhouse (1), right side wheelhouse (2), rear wall (3), top left wheelhouse (5), left side wheelhouse (4), left rear side panel (6), right lower tunnel side (12), right upper tunnel side (7), left lower tunnel side (8), left upper tunnel side (9), left front side panel (10), driver floor (11), passenger floor panel (13), right front side panel (14), tool box cover (15), rear floor panel (16), and right rear side panel (17). This procedure covers installation and removal of passenger floor panel insulation (13) only.

16-9. Vehicle Insulation (Cont'd)

STEP NO.	LOCATION	ITEM	ACTION	REMARKS
	a. INSTALLATION			
		NOTE		
		Crew compartment must be cleaned of all dirt and debris before installation.		
1.		Passenger floor panel insulation (13)	*a.* Position in place on vehicle floor panel (19).	
			b. Locate and scribe position of two drilled holes (18) in floor panel (19) on insulation panel (13).	

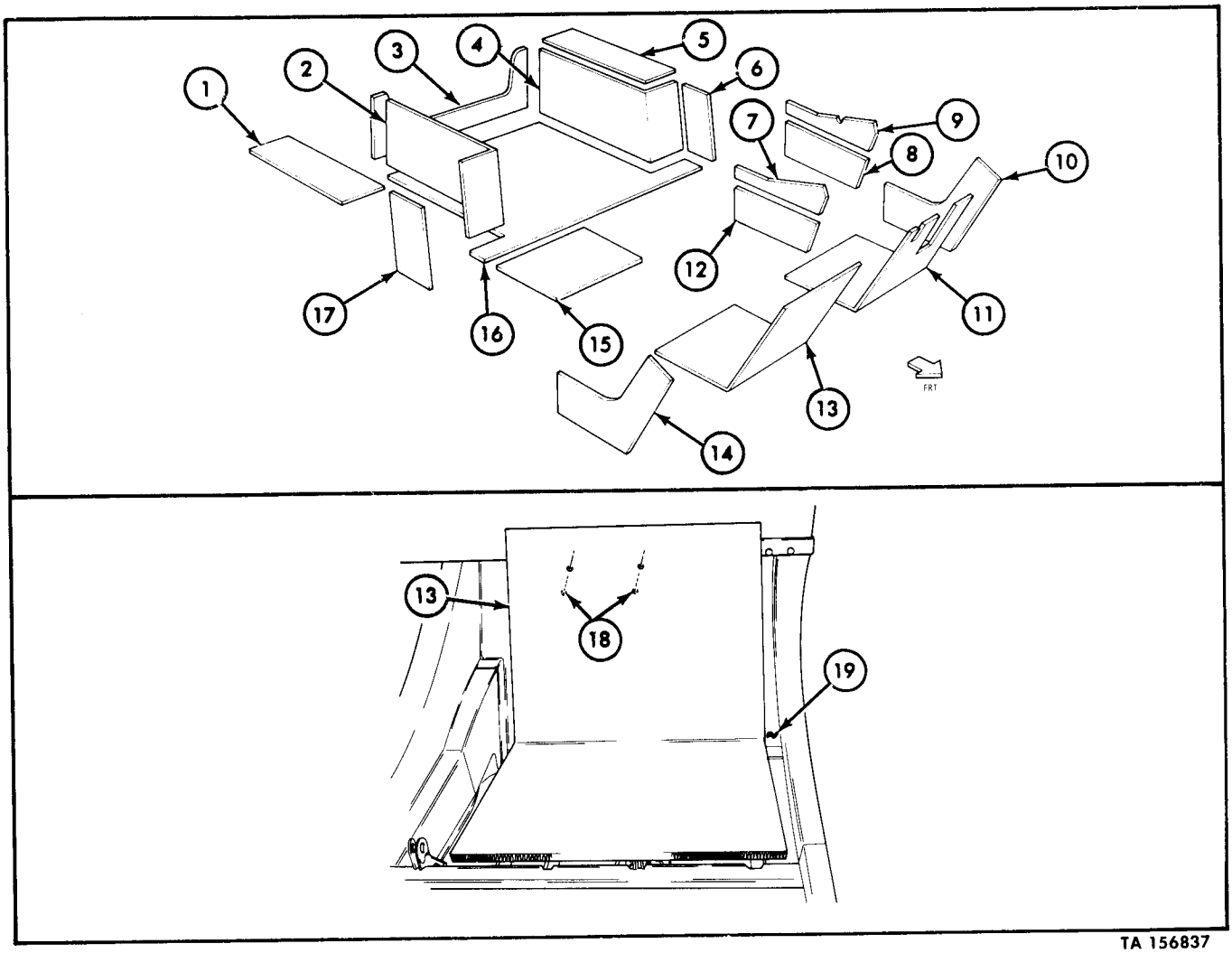

TA 156837

16-9. Vehicle Insulation (Cont'd)

STEP NO.	LOCATION	ITEM	ACTION	REMARKS
		NOTE		
		Leather grain side of insulation (2) should be visible after installation.		
2.		Adhesive	*a.* Apply liberally to insulation panel (2) and floor panel (1).	
			b. Allow to dry until tacky.	
3.		Passenger floor panel insulation (2)	Carefully join to vehicle floor panel (1).	

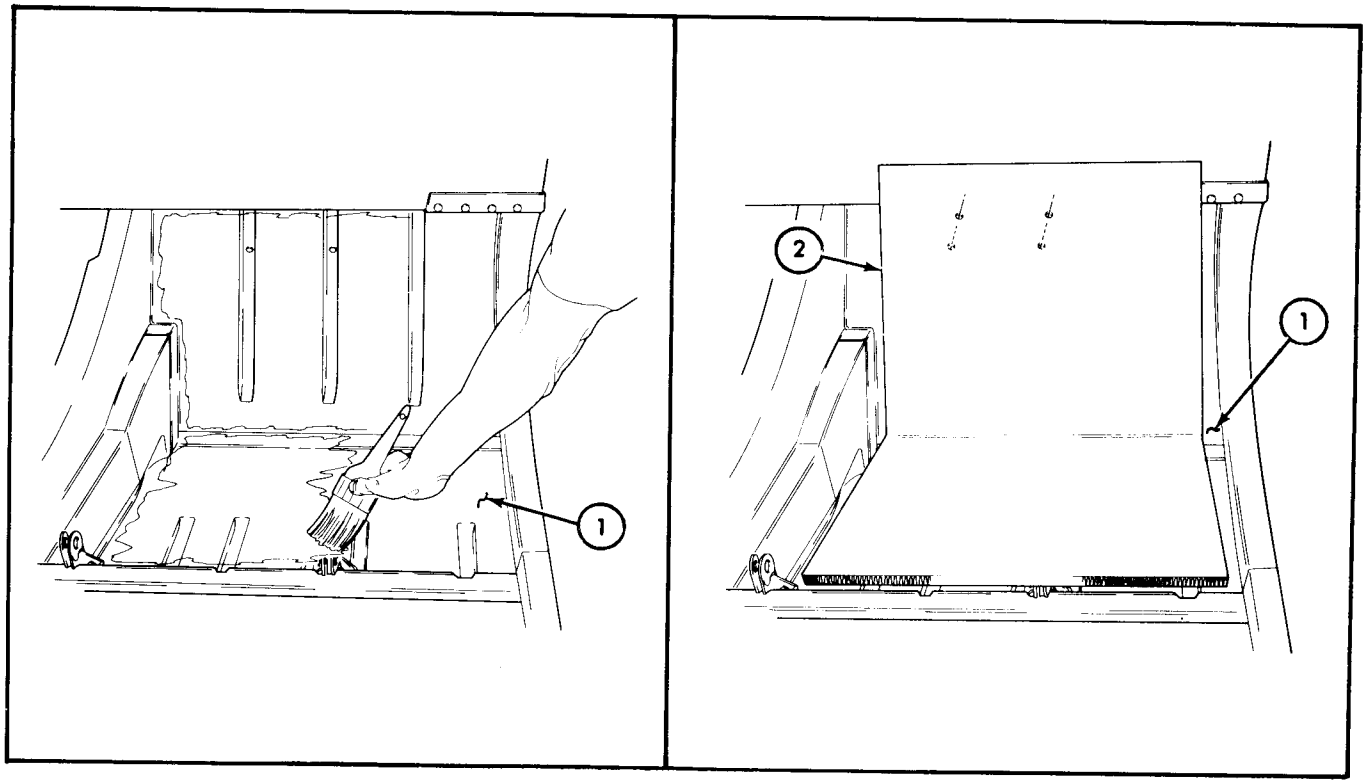

TA 156838

16-9. Vehicle Insulation (Cont'd)

STEP NO.	LOCATION	ITEM	ACTION	REMARKS
b. REMOVAL				
4.		Passenger floor panel insulation (2)	Pull away from floor panel (1).	
5.		Vehicle floor panel (1)	Scrape all insulation residue from contact area.	

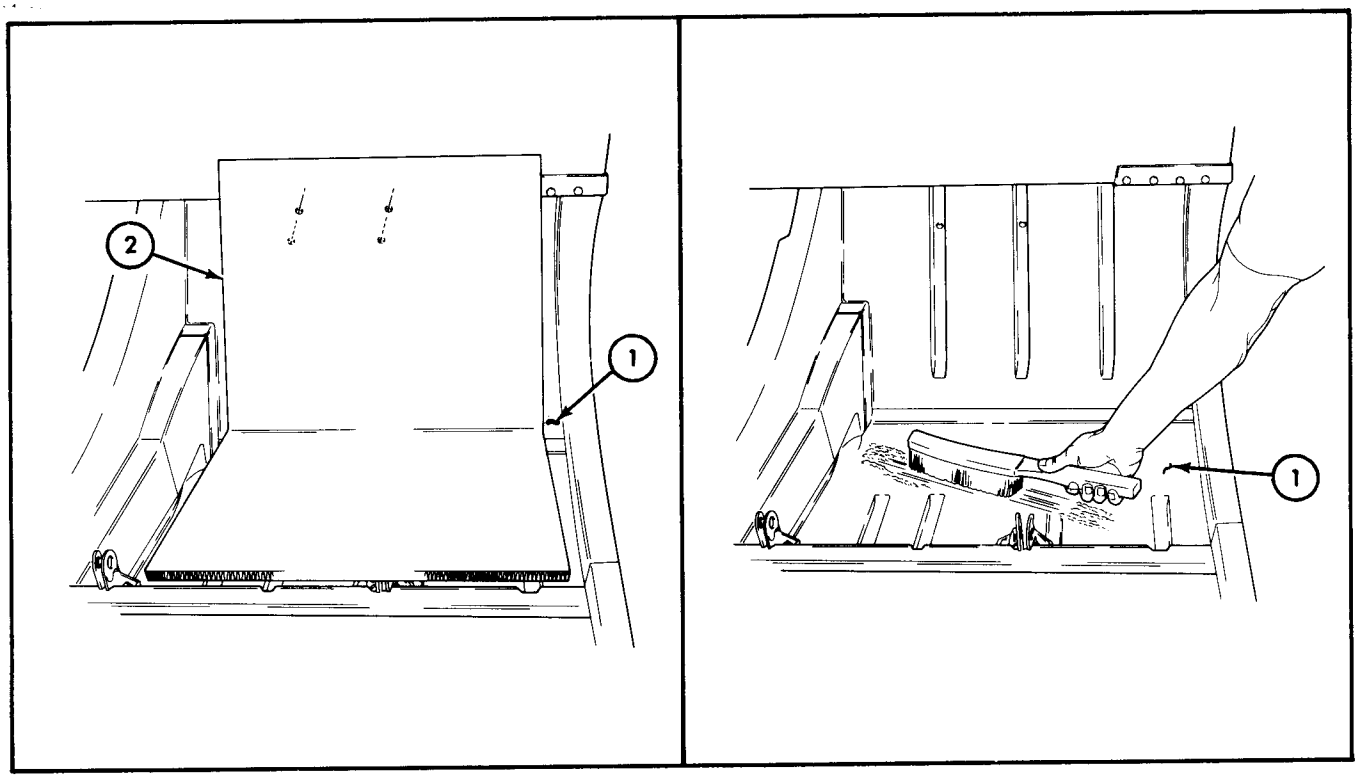

END OF TASK!

FOLLOW-ON TASKS:
- Install rear seats (TM 9-2320-218-20-1).
- Install front seats (TM 9-2320-218-20-1).

TA 156839

16-10. Brush Guard Cover

This task covers:

a. Drilling Instructions
b. Installation
c. Removal

INITIAL SETUP:

Applicable Models	Equipment Condition Reference	Condition Description
M151A2	TM 9-2320-218-10	Parking brake set.
	TM 9-2320-218-10	Hood raised and secured.

Test Equipment
None

Special Tools
5/32 in. drill bit

Special Environmental Conditions
None

Materials/Parts
None

Personnel Required
One mechanic
One assistant

General Safety Instructions
Eye protection will be worn during all drilling operations.

Manual References
TM 9-2320-218-10
TM 9-2320-218-34P

STEP NO.	LOCATION	ITEM	ACTION	REMARKS
	a. DRILLING INSTRUCTIONS			
1.	Vehicle front exterior		Drill thirteen 5/32 in. (3.968 mm) brush guard cover turnbutton stud holes as follows:	

NOTE

Assistant will hold brush guard cover (2) at correct installation position on brush guard (1).

a. Scribe turnbutton stud hole locations using brush guard cover (2) as a template.

WARNING

Metal drilling creates flying metal particles. For personnel safety, eye protection will be worn during all drilling operations.

16-10. Brush Guard Cover (Cont'd)

STEP NO.	LOCATION	ITEM	ACTION	REMARKS
			b. Drill thirteen holes.	
b. INSTALLATION				
2.		Thirteen turnbutton studs (5), lockwashers (4), and nuts (3)	Install on brush guard (1).	
3.		Brush guard cover (2)	*a.* Aline holes with turnbuttons (5).	
			b. Secure to brush guard (1) by twisting turnbuttons (5) clockwise.	
c. REMOVAL				
4.	Brush guard cover (2) to brush guard (1)	Thirteen turnbuttons (5)	Twist counterclockwise to release and remove cover (2).	

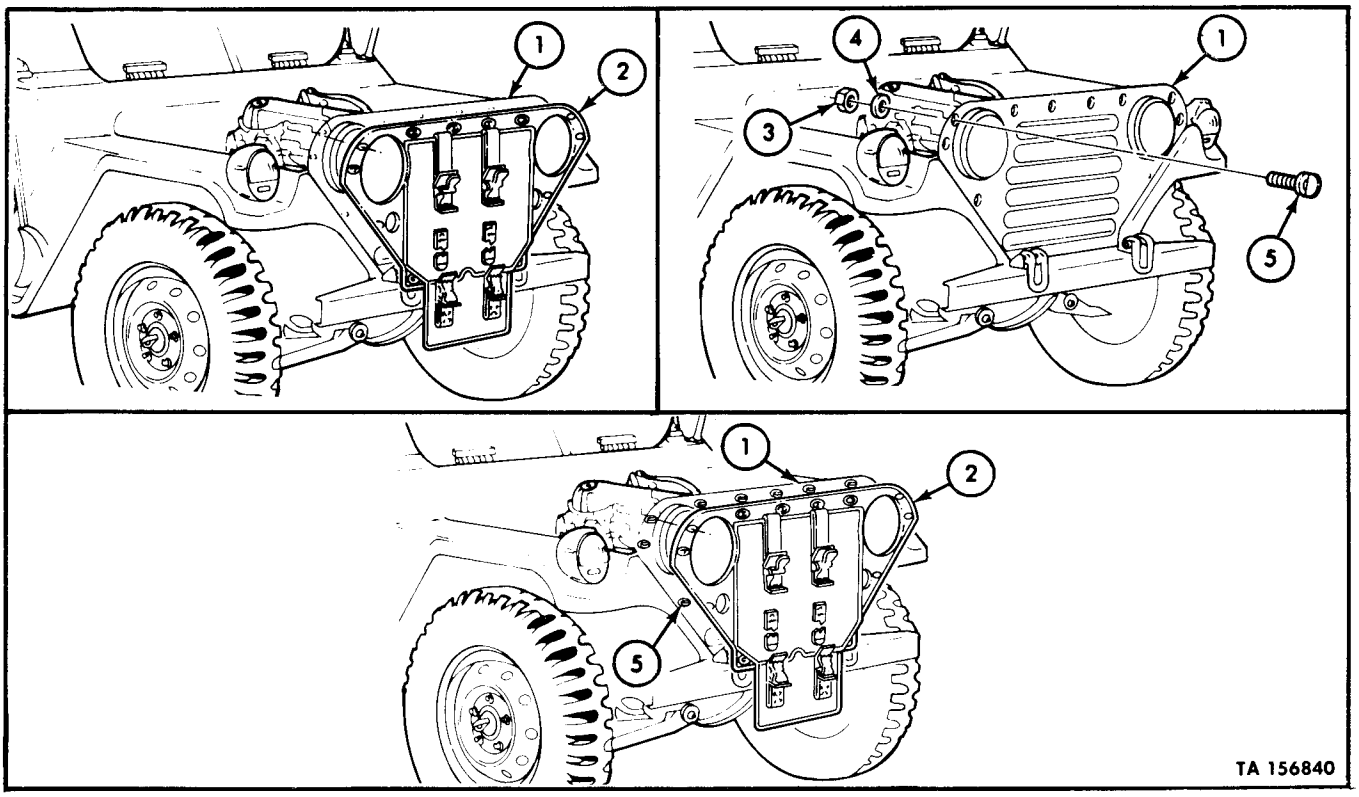

END OF TASK!

16-11. Slave Receptacle

This task covers:

a. Drilling Instructions
b. Installation
c. Removal

INITIAL SETUP:

Applicable Models
M151A2

Equipment Condition Reference	Condition Description
TM 9-2320-218-10	Parking brake set.
TM 9-2320-218-20-1-1	Batteries removed (tasks *a* and *b* only).

Test Equipment
None

Special Tools
9/32 in. drill bit
7/8 in. drill bit

Special Environmental Conditions
None

Materials/Parts
None

Personnel Required
One mechanic

General Safety Instructions
Eye protection will be worn during all drilling operations.

Manual References
TM 9-2320-218-10
TM 9-2320-218-20-1-1
TM 9-2320-218-34P

STEP NO.	LOCATION	ITEM	ACTION	REMARKS
	a. DRILLING INSTRUCTIONS			
		WARNING		
		Metal drilling creates flying metal particles. For safety of personnel, eye protection will be worn during all drilling operations.		
1.			Cut 2 in. (50.799 mm) slave receptacle hole as follows:	

16-11. Slave Receptacle (Cont'd)

STEP NO.	LOCATION	ITEM	ACTION	REMARKS
			a. Measure 4 in. (101.60 mm) right from right outboard edge of cowl (1) and 1½ in. (38.1 mm) up on inclined surface of cowl (1).	Locate center point of hole.
			b. Cut hole at this location.	

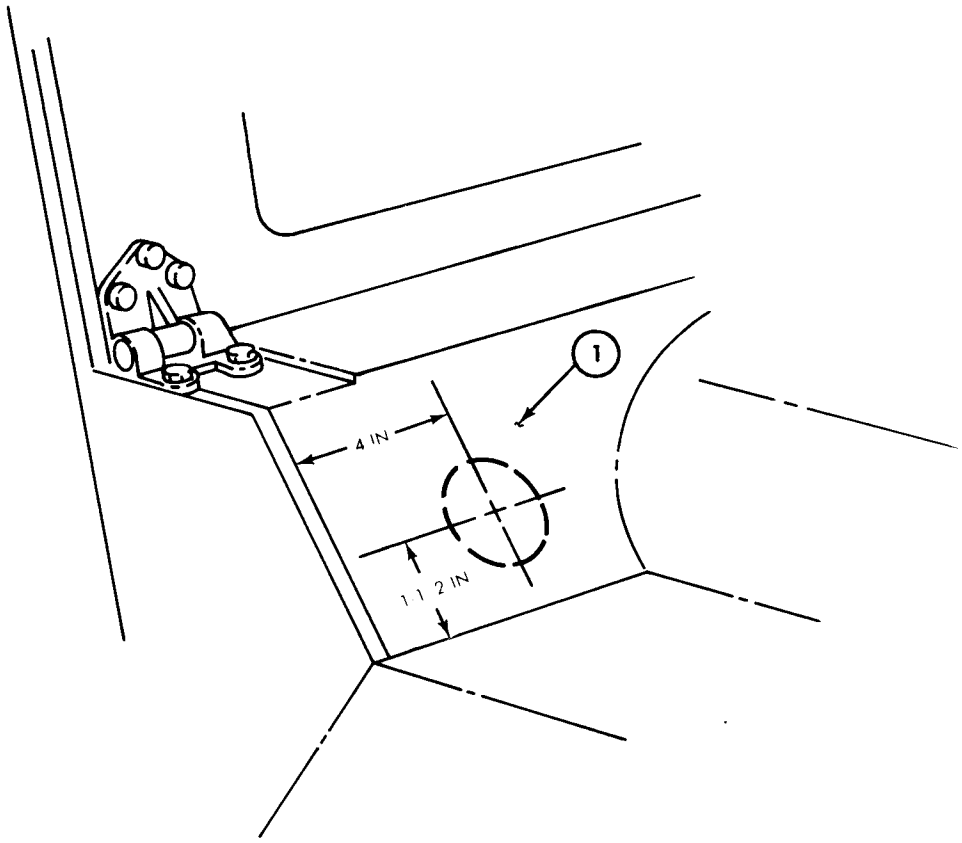

TA 156841

16-11. Slave Receptacle (Cont'd)

STEP NO.	LOCATION	ITEM	ACTION	REMARKS
2.			Drill four 9/32 in. (6.937 mm) slave receptacle mounting plate holes as follows: *a.* Insert receptacle (2) through opening in cowl (1) and use as template to mark four hole locations. *b.* Remove receptacle (2) and drill four holes at marked locations.	

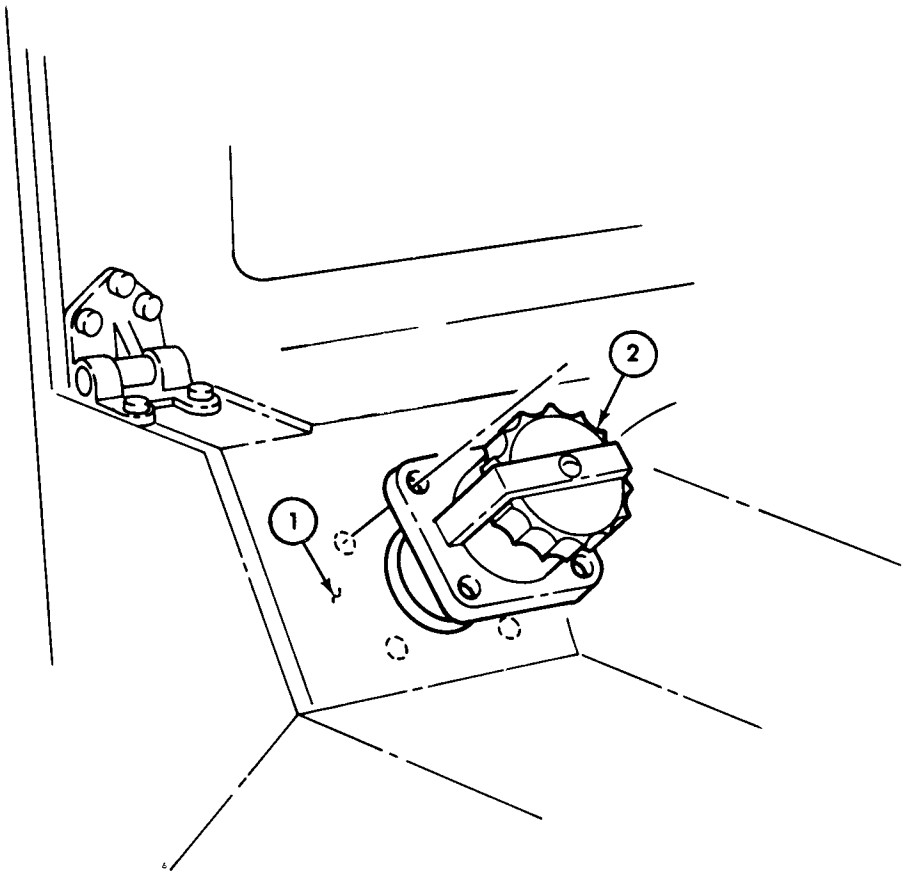

TA 156842

16-11. Slave Receptacle (Cont'd)

STEP NO.	LOCATION	ITEM	ACTION	REMARKS
3.			Drill 7/8 in. (22.225 mm) slave cable hole in right side seat riser (1) as follows:	
			a. Measure 1-5/8 in. (41.275 mm) left from right side panel (2) and 1-9/16 in. (39.687 mm) up from floor of battery compartment (3).	Locates center point of hole.
			b. Scribe hole location and drill hole.	

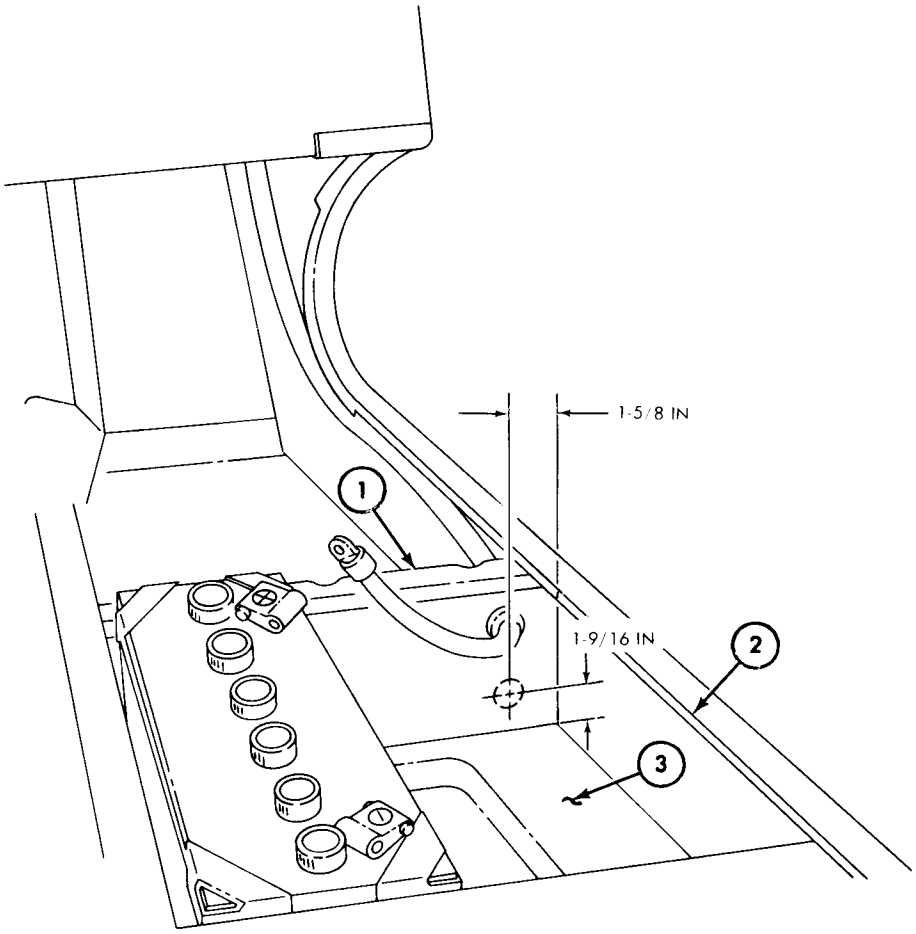

TA 156843

16-11. Slave Receptacle (Cont'd)

STEP NO.	LOCATION	ITEM	ACTION	REMARKS
b. INSTALLATION				
4.		Slave receptacle cable (6)	Insert through opening in cowl (5).	Make sure cable (6) is routed next to body side panel (1).
5.		Receptacle (7)	*a.* Secure to cowl (5) with three capscrews (8), flatwashers (4), lockwashers (3), and nuts (2). *b.* Secure to remaining hole with capscrew (9), internal-tooth lockwasher (10), ground cable lead (11), external-tooth lockwasher (12), and nut (13).	
6.		Grommet (20)	Insert in seat riser (19) hole.	
7.		Slave receptacle cable (6)	Insert end through grommet (20) and pull into battery compartment (21).	
8.		Retaining clamp (16)	*a.* Install on receptacle cable (6) and ignition cable (22). *b.* Secure to body side panel (1) with capscrew (18), washer (26), and nut (25).	Use two-cable clamp (16) supplied with kit.
9.		Two retaining clips (14)	Install around cables (6) and (22) and secure to cowl channel (15).	
10.		Two batteries	Install.	See TM 9-2320-218-20-1-1.
11.		Ignition cable (22) and slave receptacle cable (6)	Secure to left battery positive terminal (23) with bolt (17) and nut (24).	Test slave receptacle assembly for proper operation.

16-11. Slave Receptacle (Cont'd)

STEP NO.	LOCATION	ITEM	ACTION	REMARKS

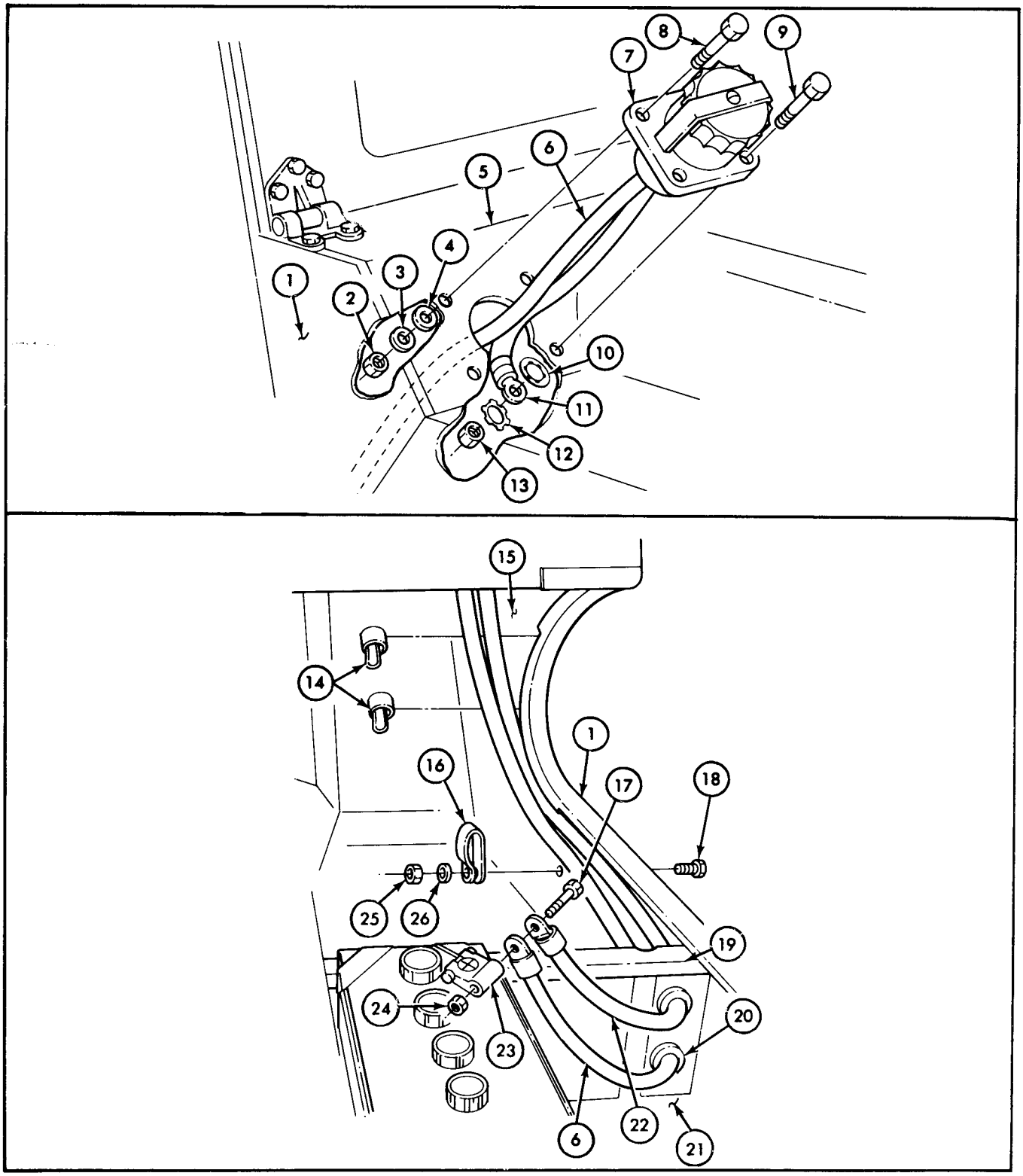

TA 156844

16-11. Slave Receptacle (Cont'd)

STEP NO.	LOCATION	ITEM	ACTION	REMARKS
c. REMOVAL				
12.		Passenger seat	Remove.	See TM 9-2320-218-20-1-2
13.	Battery box heater hose (1) to battery box cover nlet flange (2)	Clamp (6)	Loosen screw (5) and remove hose (1).	
14.		Battery heater box cover (3)	Remove from battery box (4).	
15.	Receptacle cable (16) to left battery positive terminal (17)	Nut (18) and bolt (11)	Remove and pull cable (16) aside.	Also detaches ignition cable (15).
16.	Retaining clamp (9) to body side panel (10)	Nut (19), washer (20), and capscrew (12)	Remove.	
17.		Retaining clamp (9)	Remove from body side panel (10).	
18.	Cowl channel (8)	Two clips (7)	Remove.	
19.		Slave receptacle cable (16)	Pull through grommet (13) in seat riser (14).	
20.	Slave receptacle assembly (25) to cowl (24)	Four nuts (21), five lockwashers (22), one ground cable (27), three flatwashers (23), and four capscrews (26)	Remove.	
21.		Slave receptacle (25) and cable (16)	Remove from opening in cowl (24).	

16-11. Slave Receptacle (Cont'd)

STEP NO.	LOCATION	ITEM	ACTION	REMARKS

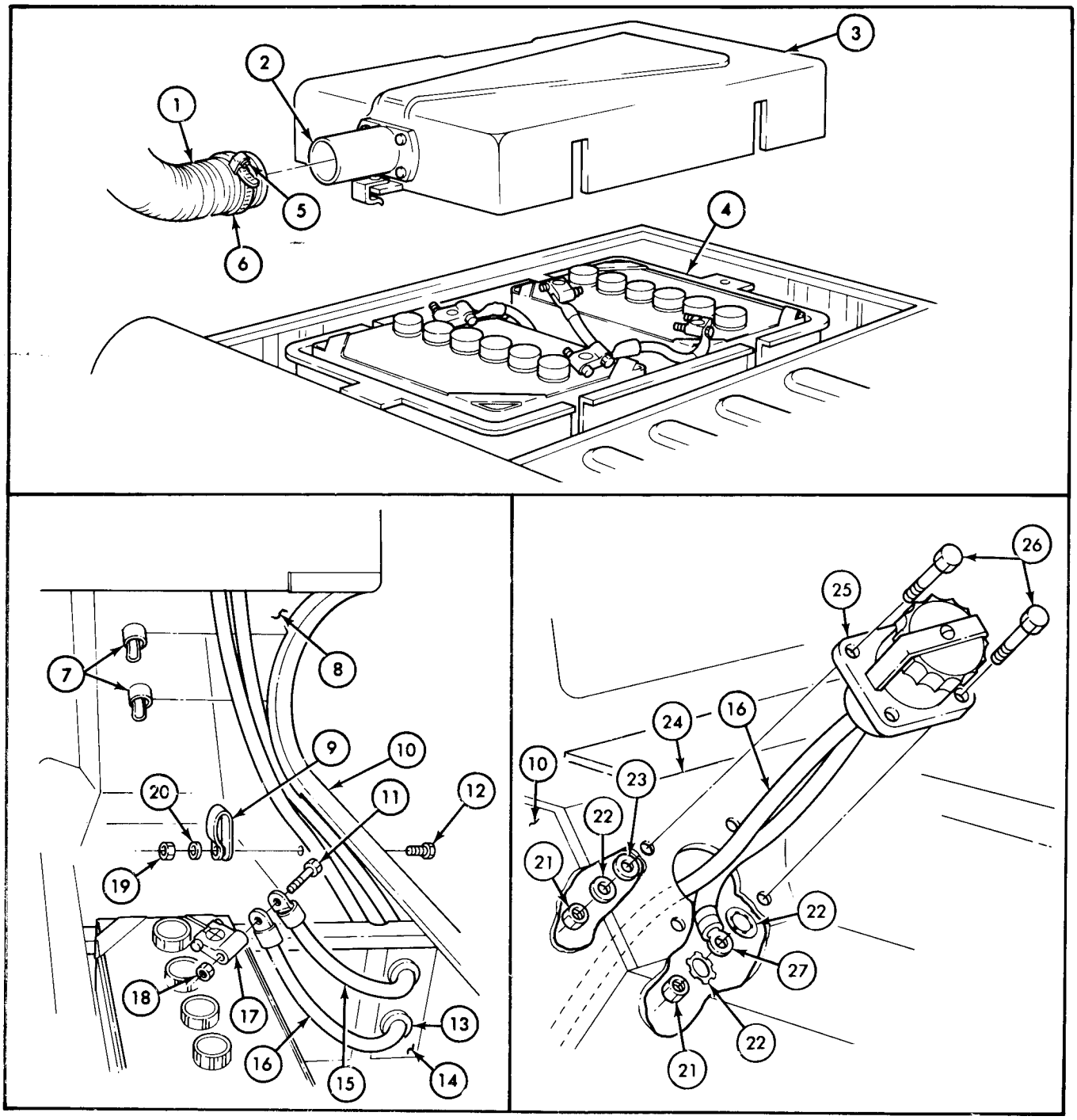

END OF TASK!

FOLLOW-ON TASK: Install passenger seat (TM 9-2320-218-20-1-2).

TA 156845

16-12. Heater Assembly Tests and Adjustments

This task covers:

a. Heater Guard and Cover Removal
b. Fuel Control Valve Test and Adjustment
c. Flame Detector Switch Adjustment
d. Heater Guard and Cover Installation

INITIAL SETUP:

Applicable Models
M151A2

Equipment Condition Reference
TM 9-2320-218-10

Condition Description
Parking brake set.

Test Equipment
24-volts DC power source
Graduated beaker

Special Tools
None

Special Environmental Conditions
Well-ventilated work area.

Materials/Parts
3/16 in. diameter fuel tubing
Insulating varnish (NSN 5970-00-296-1158)
Four lockwashers

Personnel Required
One mechanic

General Safety Instructions
Do not allow sparks or open flame near fuel control valve.

Manual References
TM 9-2320-218-10
TM 9-2320-218-34P

STEP NO.	LOCATION	ITEM	ACTION	REMARKS
	a. HEATER GUARD AND COVER REMOVAL			
1.	Heater guard (1) to heater guard brackets (5)	Four capscrews (2) and lockwashers (3)	Remove.	Discard lockwasher (3).
2.		Heater guard (1)	Remove from heater guard brackets (5).	
3.	Heater cover assembly (4) to heater casing (6)	Two dzus fasteners (7)	Turn counterclockwise to unfasten.	
4.		Heater cover assembly (4)	Remove from heater casing (6).	
	b. FUEL CONTROL VALVE TEST AND ADJUSTMENT			

16-12. Heater Assembly Tests and Adjustments (Cont'd)

STEP NO.	LOCATION	ITEM	ACTION	REMARKS
		WARNING Do not allow sparks or open flame near fuel control valve while testing or adjusting. Explosion and fire will result.		
5.		Fuel outlet tube (14)	Unscrew nut (13) and remove from metering orifice outlet (12).	
6.	Restriction solenoid electrical wire B (10) to receptacle (9)	Screw-assembled lock-washer (11)	Remove.	
7.	Shutoff solenoid electrical wire 30 (16), to overheat switch (15)	Nut-assembled lock-washer (8)	Remove.	

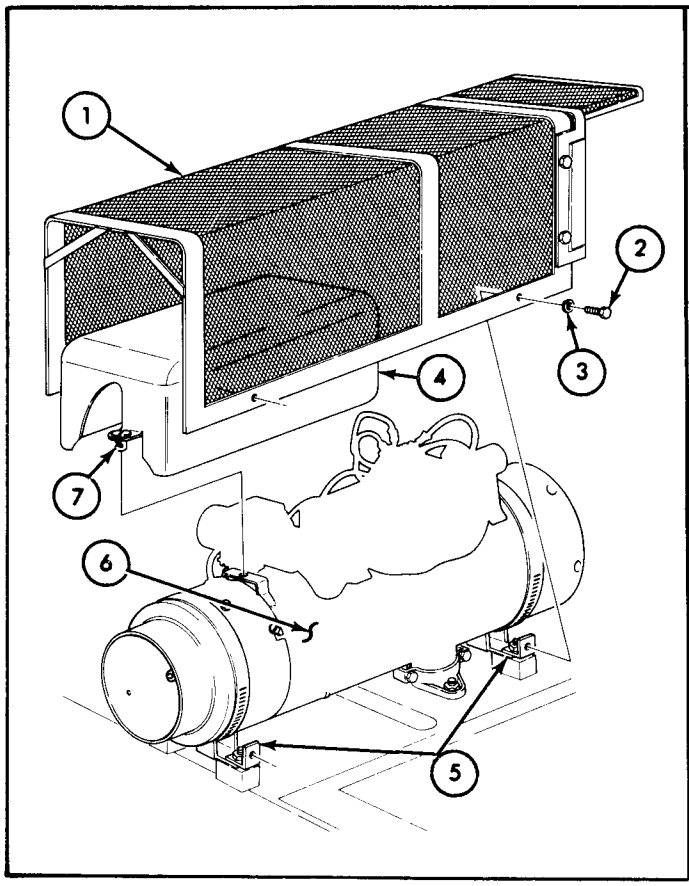

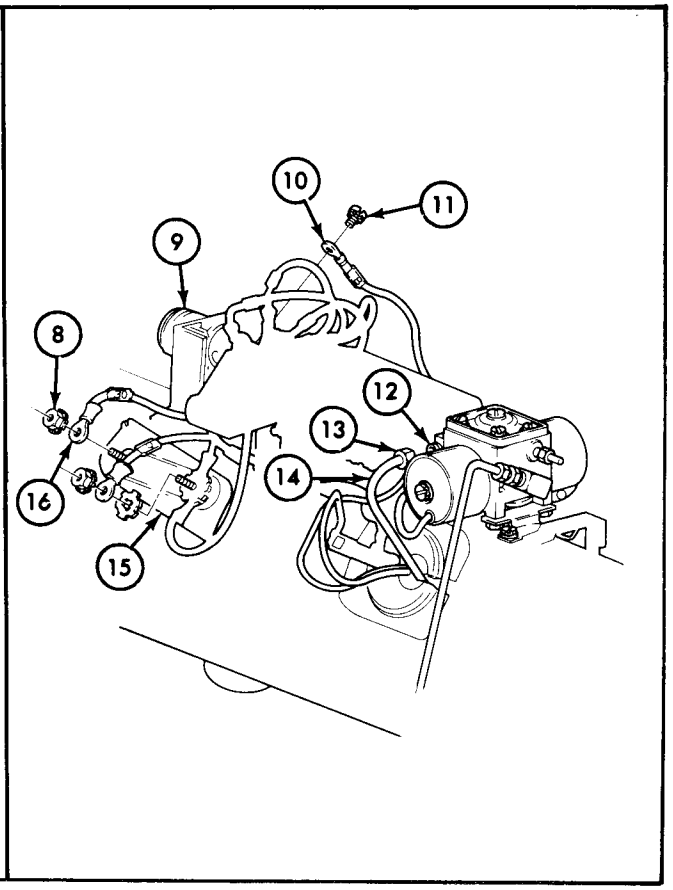

TA 156846

16-12. Heater Assembly Tests and Adjustments (Cont'd)

STEP NO.	LOCATION	ITEM	ACTION	REMARKS
8.		Fuel tube (10)	Insert one end in orifice outlet (1) and one in graduated beaker (9).	
9.		24-volt DC power source negative lead (5)	Connect to fuel control valve (4).	
10.		24-volt DC power source positive lead (8)	Connect to restriction solenoid electrical wire B (7) and shutoff solenoid electrical wire 30 (6).	
11.		Fuel control valve (4)	Test and adjust high-heat fuel flow as follows:	
			a. Energize and allow fuel to flow for a few seconds.	
			b. Open bleed valve (3) to remove air from fuel.	
			c. Close bleed valve (3) when fuel is free of air bubbles.	
			d. Allow fuel to flow for exactly one minute.	
			e. Disconnect power source negative lead (5) and measure amount of fuel in beaker(9).	High heat fuel flow should be .039 ± .004 lb per minute (25 ± 2 cc per minute).
			f. If fuel flow is within limits, go to step 12.	
			g. If fuel flow is not within limits, turn adjusting screw (2) clockwise to increase and counterclockwise to decrease flow rate.	
			h. Repeat steps 11*a* through h.	
12.		Fuel control valve (4)	Test and adjust low-heat fuel flow as follows:	

16-12. Heater Assembly Tests and Adjustments (Cont'd)

STEP NO.	LOCATION	ITEM	ACTION	REMARKS
			a. Disconnect restriction solenoid electrical wire B (7) from power source positive lead (8).	
			b. Connect power source negative lead (5) to fuel control valve (4) and repeat steps 11*a* through 11*e*.	Low-heat fuel flow should be .022 ± .002 lb per minute 15.5 ± 1 cc per minute).
			c. If fuel flow is within limits, seal adjusting screw (2) in place and go to step 13.	Use insulating varnish.
			d. If fuel flow is not within limits, turn adjusting screw (2) clockwise to increase and counterclockwise to decrease flow rate.	
			e. Repeat steps 12*a* through 12*e*.	
13.		24-volt DC power source negative lead (5), positive lead (8), and fuel tube (10)	Disconnect from fuel control valve (4), electrical wire B (7), and electrical wire 30 (6).	

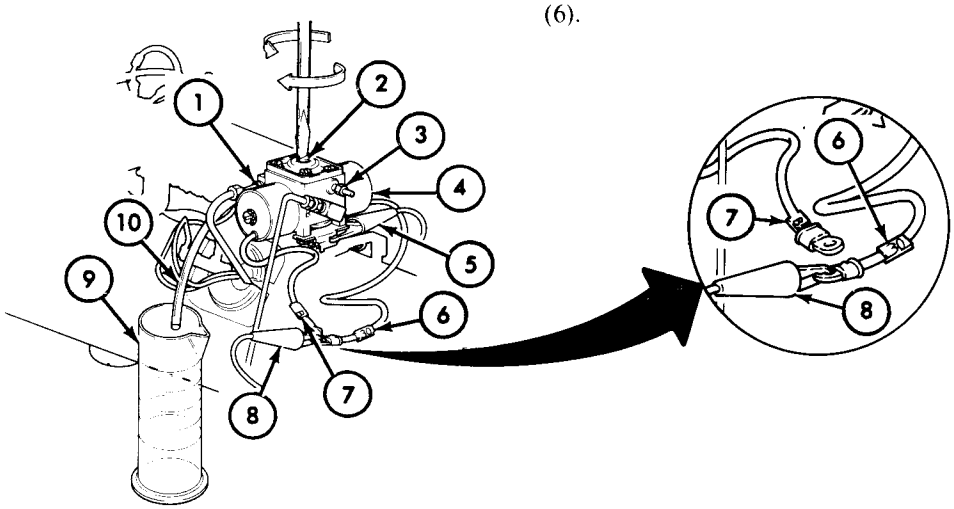

TA 156847

16-12. Heater Assembly Tests and Adjustments (Cont'd)

STEP NO.	LOCATION	ITEM	ACTION	REMARKS
14.		Fuel outlet tube (7)	Connect to metering orifice outlet (5) and tighten nut (6).	
15.		Restriction solenoid electrical wire B (3)	Secure to receptacle (2) with screw-assembled lockwasher (4).	
16.		Shutoff solenoid electrical wire 30 (9)	Secure to overheat switch (8) with nut-assembled lockwasher (1).	

c. FLAME DETECTOR SWITCH ADJUSTMENT

NOTE

Flame detector switch adjustment must be performed with heater and switch cold.

17.		Micro-switch adjustment screw (10)	*a.* Back off by turning counterclockwise two turns.	
			b. Turn clockwise slowly until "click" is heard.	Mark exact position of screw slot when "click" occurs.
			c. Give an additional 1/2 turn.	
			d. Seal in place.	Use insulating varnish.

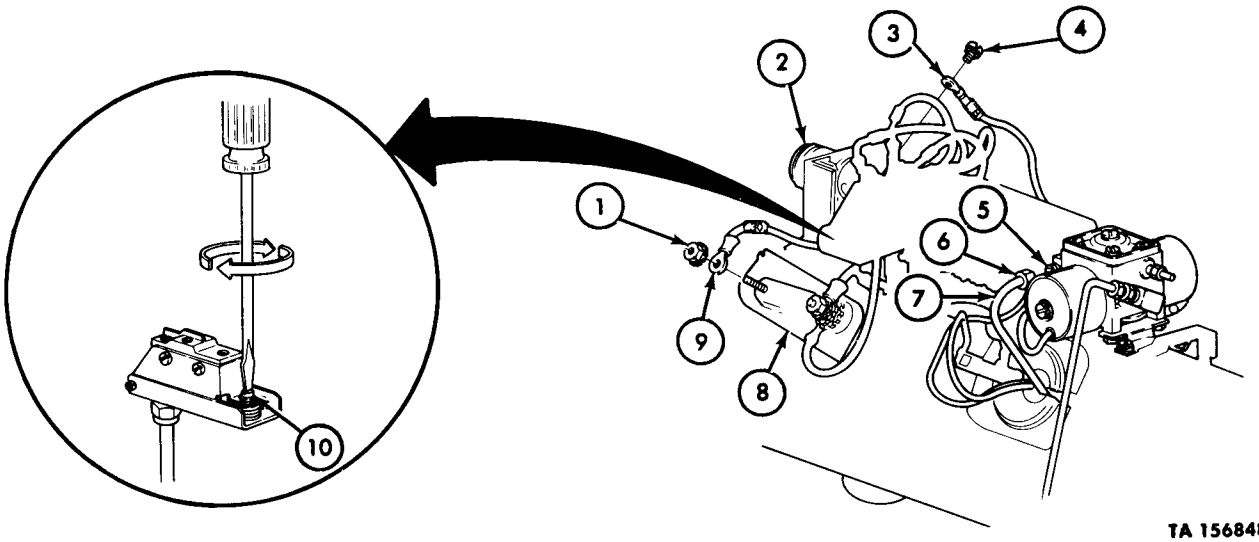

TA 156848

16-12. Heater Assembly Tests and Adjustments (Cont'd)

STEP NO.	LOCATION	ITEM	ACTION	REMARKS
d. HEATER GUARD AND COVER INSTALLATION				
18.		Heater cover assembly (14)	Position on heater casing (16) and secure by turning two dzus fasteners (17) clockwise.	
19.		Heater guard (11)	Secure to heater guard brackets (15) with four new lock-washers (13) and cap-screws (12).	

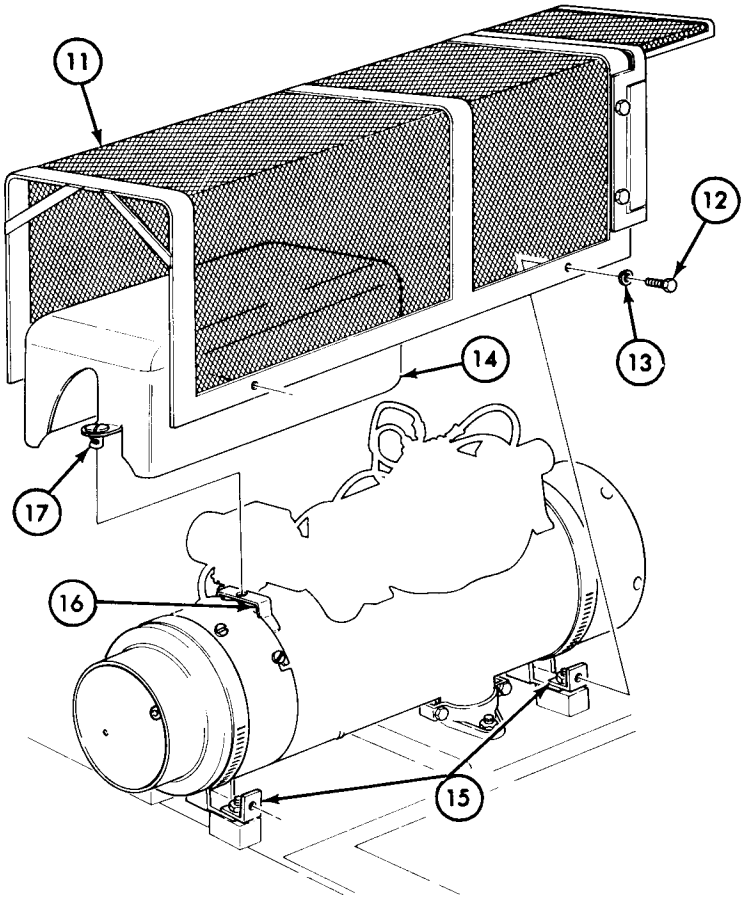

END OF TASK!

TA 156849

16-13. Heater Disassembly Into Subassemblies

This task covers:

Disassembly

INITIAL SETUP:

Applicable Models
M151A2

Equipment Condition Reference — **Condition Description**
TM 9-2320-218-20-1-2 — Heater removed.

Test Equipment
None

Special Tools
None

Special Environmental Conditions
None

Materials/Parts
None

Personnel Required
One mechanic

General Safety Instructions
None

Manual References
TM 9-2320-218-20-1-2

STEP NO.	LOCATION	ITEM	ACTION	REMARKS
	DISASSEMBLY			
1.	Heater cover assembly (1)to heater casing mounting brackets (7)	Two dzus fasteners (8)	Turn counterclockwise to unfasten.	
2.		Heater cover assembly (1)	Remove from heater casing (5).	
3.	Blower motor lead wire (3) to flame detector switch (4)	Screw-assembled lock-washer (2)	Remove.	
4.		Blower motor lead wire (3)	Remove from retainer clamp (6).	
5.	Blower motor assembly (12) to heater casing (5)	Four screw-assembled lockwashers (10)	Loosen.	Do not remove.
6.		Blower motor assembly (12)	Turn counterclockwise in bayonet slots (11) and pull free.	

16-13. Heater Disassembly Into Subassemblies (Cont'd)

STEP NO.	LOCATION	ITEM	ACTION	REMARKS
7.		Blower motor lead wire (3) and grommet (9)	Remove from heater casing (5).	

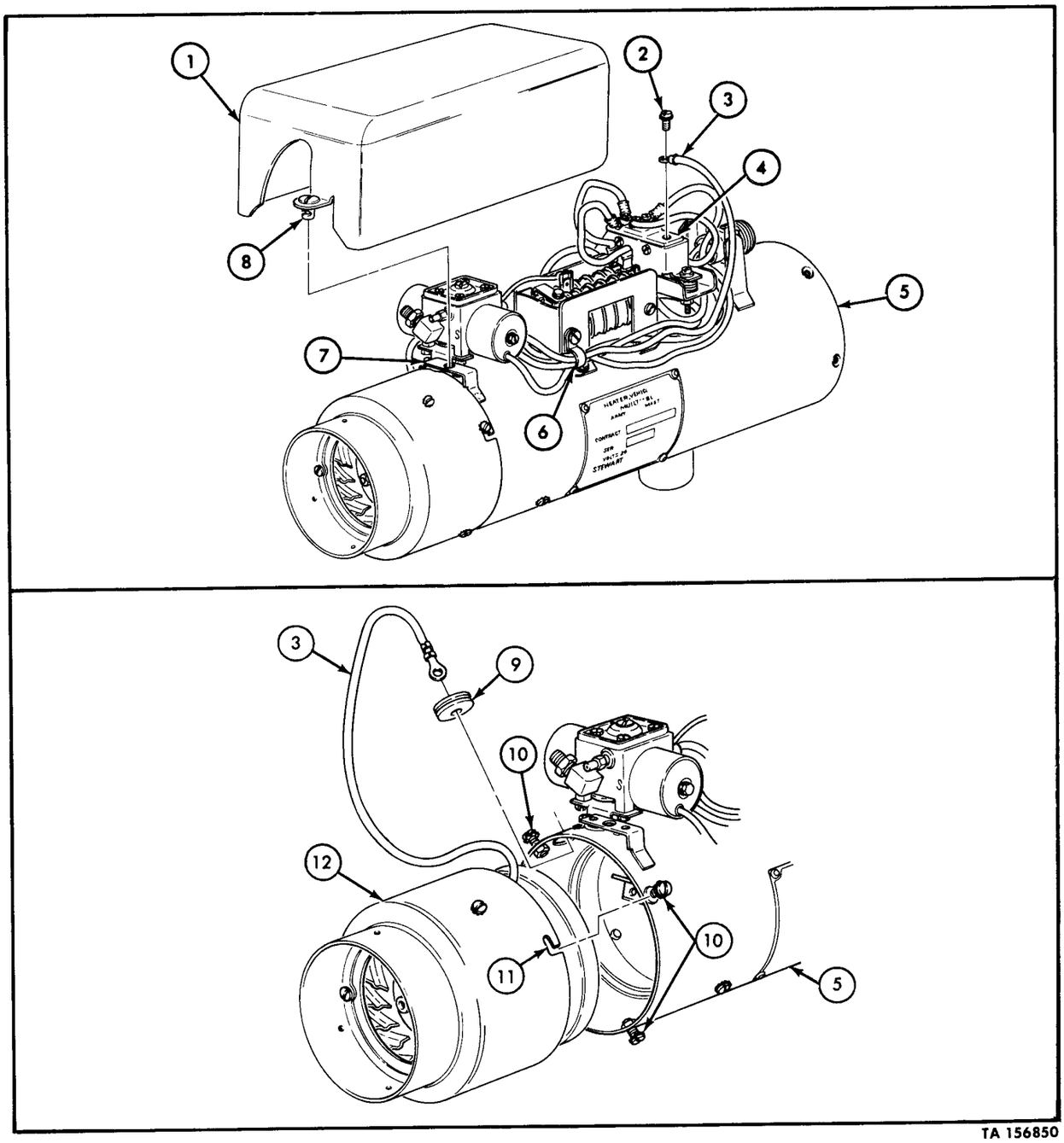

TA 156850

16-13. Heater Disassembly Into Subassemblies (Cont'd)

STEP NO.	LOCATION	ITEM	ACTION	REMARKS
8.	Restriction solenoid lead wire B (2) to receptacle terminal (3)	Screw-assembled lock-washer (1)	Remove and disconnect. lead wire (2).	
9.	Shutoff solenoid lead wire 30 (7) to overheat switch (6)	Nut-assembled lock-washer (5)	Remove and disconnect lead wire (7).	
10.		Lead wires (2) and (7)	Remove from retainer clamp (4).	
11.	Thermostat lead wire 9 (9), receptacle lead wire 9 (12), and ignition control lead wire 9 (10) to overheat switch (6)	One nut-assembled lockwasher (8) and two star lockwashers (11)	Remove and disconnect lead wires (9), (12), and (10).	Discard two star lockwashers (11).

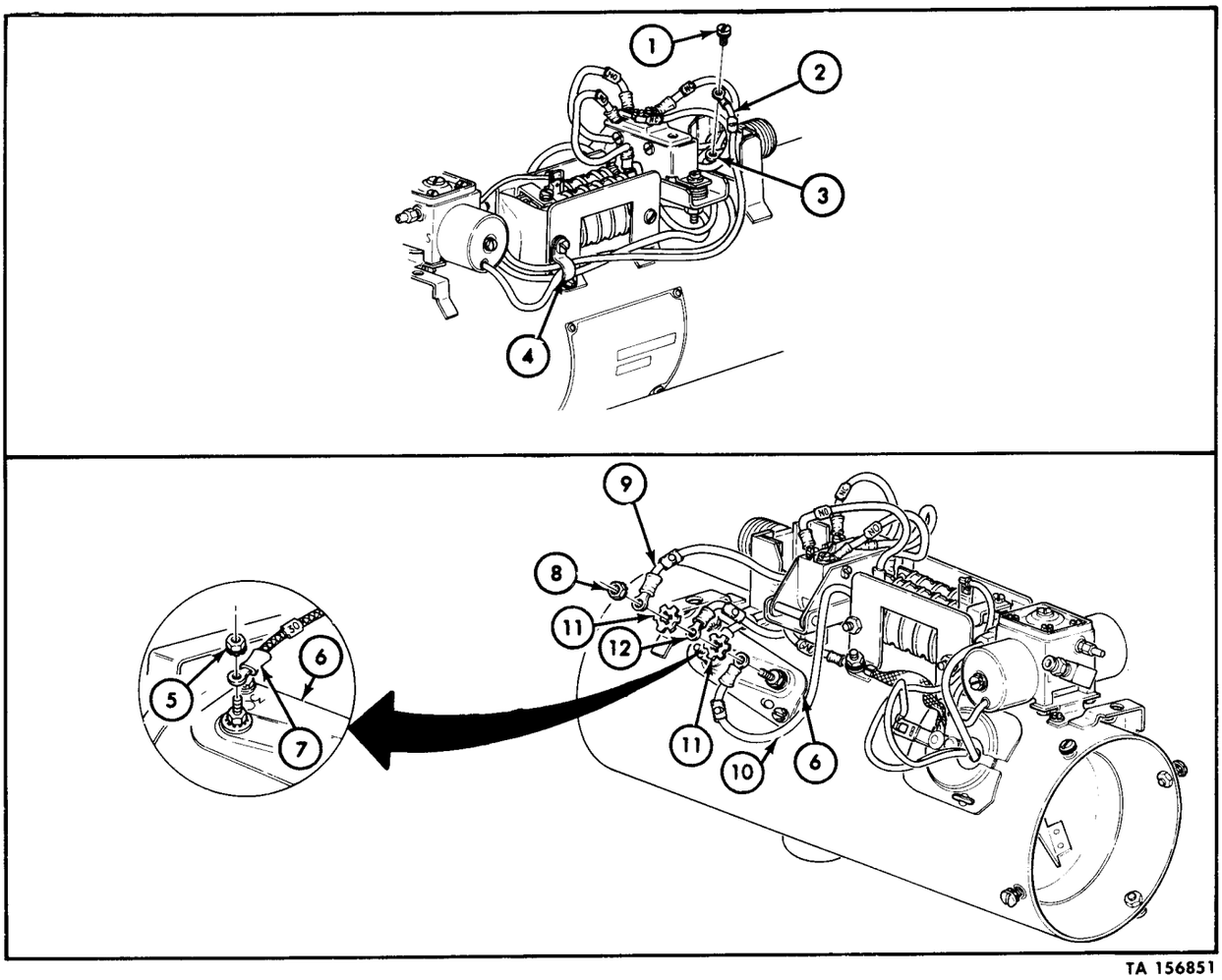

TA 156851

16-13. Heater Disassembly Into Subassemblies (Cont'd)

STEP NO.	LOCATION	ITEM	ACTION	REMARKS
12.	Fuel tube (17) to fuel control valve outlet (13)	Nut (18)	Unscrew and disconnect.	
13.	Fuel control valve (14) to heater casing (16)	Four screw-assembled lockwashers (15)	Remove.	
14.		Fuel control valve (14)	Remove from heater casing (16).	

CAUTION

When disconnecting, do not break lead wires loose from igniter assembly.

15.	Ground terminal lead wire (27) and heater receptacle ground wire (29) to ignition control base (26)	Nut-assembled lockwasher (19) and star lockwasher (28)	Remove and disconnect lead wires (27) and (29).	Discard star lockwasher (28).
16.	Igniter lead wire (22) to ignition control terminal (20)	Slip-on clip (21)	Remove.	
17.	Igniter lead wire (25) to hatch cover terminal (23)	Slip-on clip (24)	Remove.	

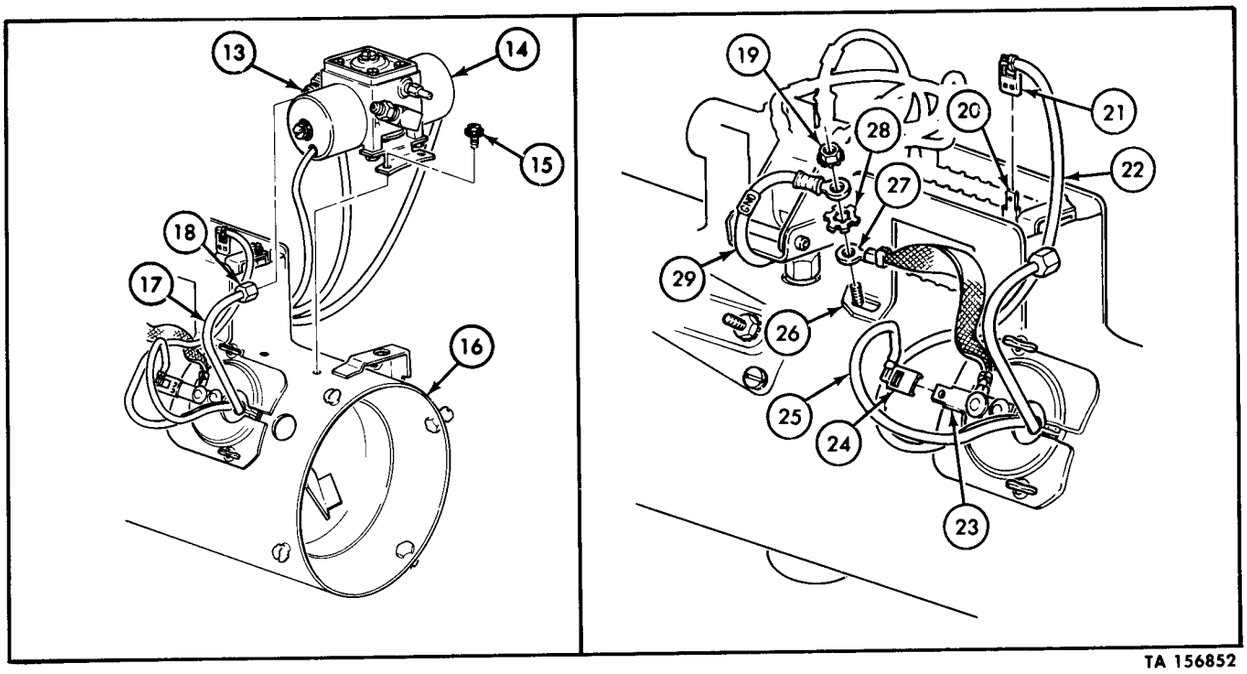

TA 156852

16-13. Heater Disassembly Into Subassemblies (Cont'd)

STEP NO.	LOCATION	ITEM	ACTION	REMARKS
18.	Hatch cover (8) to heater casing (3)	Two fly-screws (1)	Twist counterclockwise to unfasten.	
19.		Hatch cover (8)	Remove from casing (3).	
20.	Igniter tube (6)	Igniter (7)	Twist counterclockwise to release from bayonet slots (2) and remove.	
21.	Igniter tube (6) to secondary blower housing (5)	Screw-assembled lockwasher (4)	Remove.	
22.		Igniter tube (6)	Remove from blower housing (5).	
23.	Fuel tube assembly (12) to burner fuel inlet (9)	Nut (11)	Unscrew.	
24.		Fuel tube assembly (12)	Remove from secondary blower housing (5).	
25.		Secondary blower housing (5)	Lift off heat exchanger (10).	

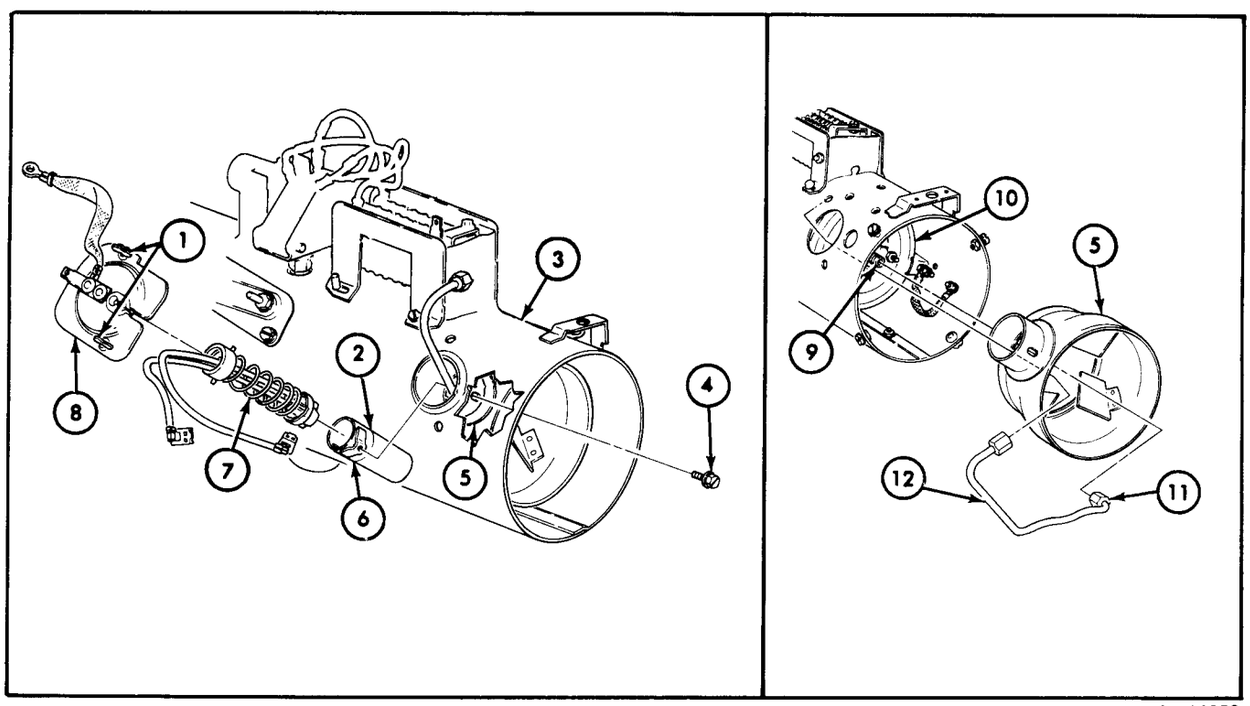

TA 156853

16-13. Heater Disassembly Into Subassemblies (Cont'd)

STEP NO.	LOCATION	ITEM	ACTION	REMARKS
26.	Two Ignition control "NO" wires (13) to flame detector switch (17)	Two screw-assembled lockwashers (14)	Remove and disconnect wires (13).	
27.	Ignition control (15) to heater casing (3)	Three screw-assembled lockwashers (16)	Remove.	
28.		Ignition control (15)	Remove from heater casing (3).	

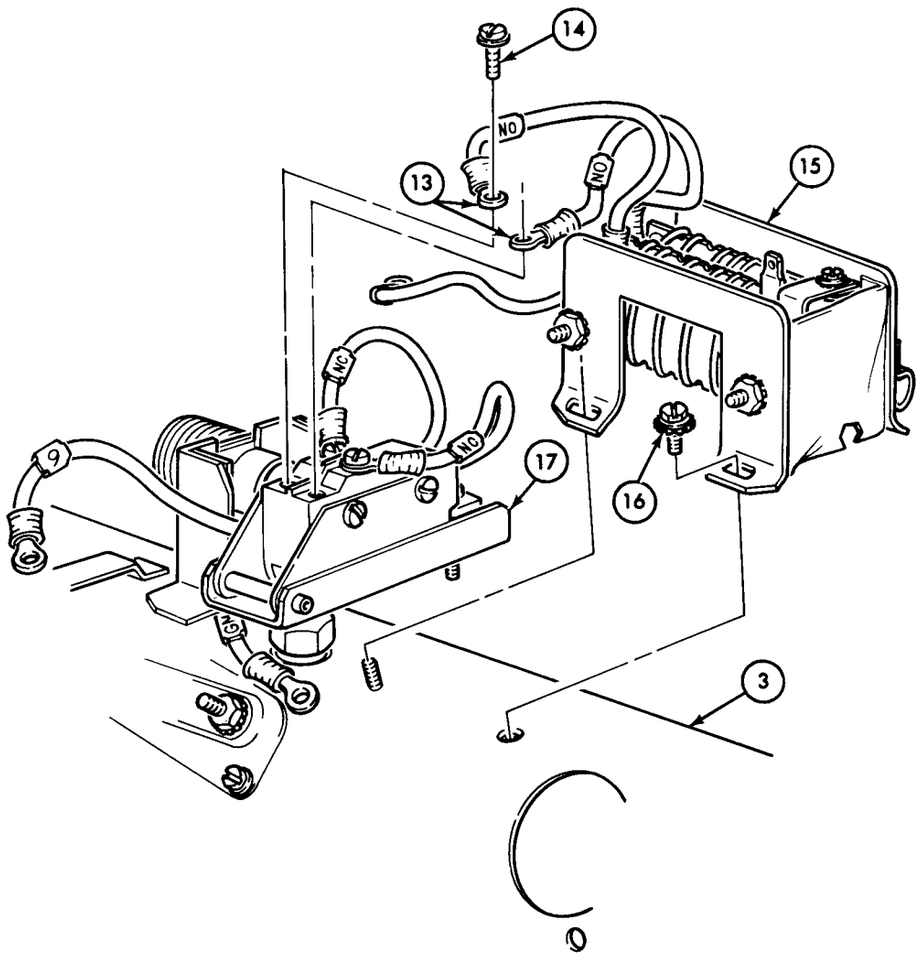

TA 156854

16-13. Heater Disassembly Into Subassemblies (Cont'd)

STEP NO.	LOCATION	ITEM	ACTION	REMARKS
29.	Two receptacle "NC" wires (2) to flame detector switch (4)	Two screw-assembled lockwashers (3)	Remove and disconnect wires (2).	
30.	Flame detector switch (4) to heat exchanger (6)	Nut (5)	Unscrew.	
31.		Flame dectector switch (4)	Remove from heat exchanger (6)	

CAUTION

The overheat switch (8) is adjusted and sealed by the manufacturer. Do not bend or twist switch (8). Do not change setting of adjustment screw (9).

32.	Overheat switch (8) to heater casing (7)	Two screw-assembled lockwashers (1)	Remove.	
33.		Overheat switch (8)	Remove from heater casing (7).	
34.	MS receptacle (11) to receptacle mounting bracket (12)	Four screw-assembled lockwashers (10)	Remove.	
35.		MS receptacle (11)	Remove from receptacle mounting bracket (12).	

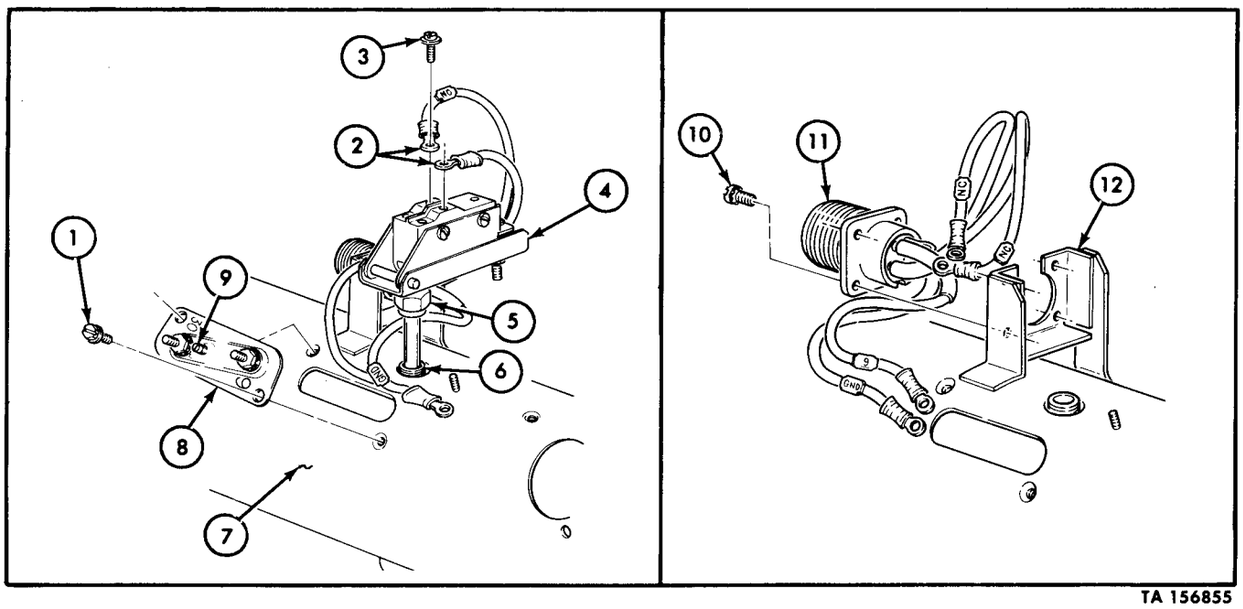

TA 156855

16-13. Heater Disassembly Into Subassemblies (Cont'd)

STEP NO.	LOCATION	ITEM	ACTION	REMARKS
36.	Burner assembly (13) to heat exchanger housing (6)	Four nut-assembled lockwashers (16), one ground wire (17), one nut-assembled lockwasher (18), four hookbolts (19), and four clamps (20)	Remove.	
37.	Burner assembly ground wire (17) to heater casing (7)	Nut-assembled lockwasher (15) and screw-assembled lockwasher (14).	Remove and disconnect ground wire (17).	
38.		Burner assembly (13) preformed packing (22), and gasket (21)	Remove from heat exchanger (6).	Discard preformed packing (22) and gasket (21).
39.	Heater casing (7) to heat exchanger (6)	Three screw-assembled lockwashers (23)	Remove.	
40.		Heater casing (7)	Spread apart just enough to clear exhaust tube (24).	
41.		Heat exchanger (6)	Pull from casing (7).	

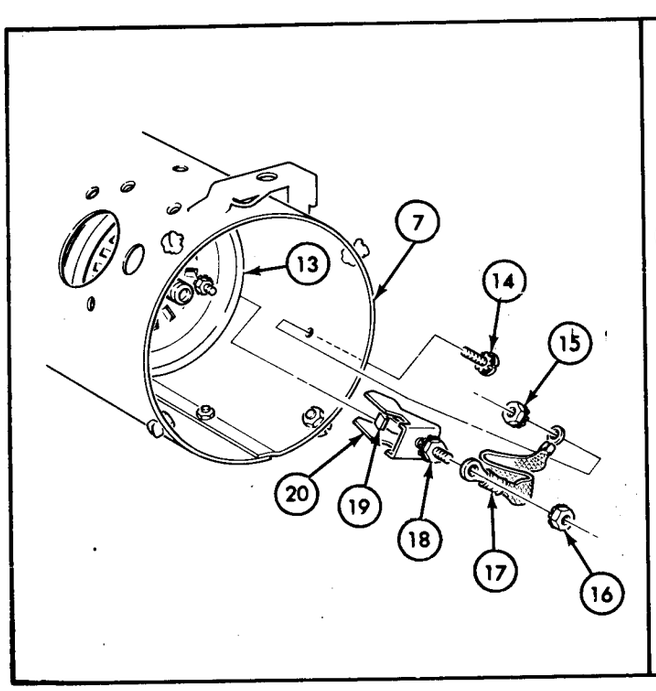

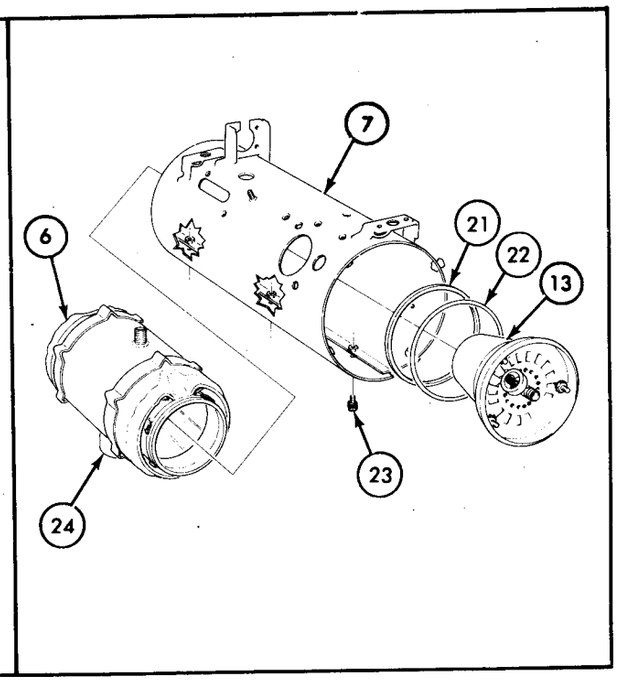

END OF TASK!

TA 156856

16-14. Heater Assembly Cleaning, Inspection, and Testing

This task covers:

a. Cleaning and Inspection *b. Testing*

INITIAL SETUP:

Applicable Models	Equipment Condition Reference	Condition Description
M151A2	Para 16-13	Heater disassembled.

Test Equipment

Ammeter
Multimeter
24-volt DC power source

Special Tools

None

Materials/Parts

Drycleaning solvent

Personnel Required

One mechanic

Manual References

TM 9-2320-218-34P

Special Environmental Conditions

Well-ventilated work area.

General Safety Instructions

- Keep fire extinguisher nearby when using drycleaning solvent.
- Always wear safety goggles when using compressed air.
- Do not touch igniter during heater test.

STEP NO.	LOCATION	ITEM	ACTION	REMARKS
		a. CLEANING AND INSPECTION		
1.		Overheat switch (3)	*a.* Slide a clean strip of paper (5) between points (2).	Do not use an abrasive.
		CAUTION		
		Do not bend blade (6) or contact arm (4). Do not change setting of adjustment screw (1).		
			b. Inspect for burnt, damaged, and defective parts.	If burnt, damaged, or defective parts are found, replace switch (3).
2.		Blower motor assembly (7)	*a.* Inspect for dirt, grease, and carbon.	

16-14. Heater Assembly Cleaning, Inspection, and Testing (Cont'd)

STEP NO.	LOCATION	ITEM	ACTION	REMARKS

WARNING

- Drycleaning solvent is flammable and will not be used near an open flame. A fire extinguisher will be kept nearby when solvent is used. Use only in well-ventilated places. Failure to do this will result in injury to personnel and/or damage to equipment.
- Compressed air source will not exceed 30 psi. When cleaning with compressed air, eyeshields must be worn. Failure to wear eyeshields may result in injury to the eyes and loss of sight.

b. Clean fan and surrounding areas with drycleaning solvent.

c. Dry with compressed air.

NOTE

Blower motor assembly (7) has been permanently lubricated by the manufacturer. Additional lubrication is not required.

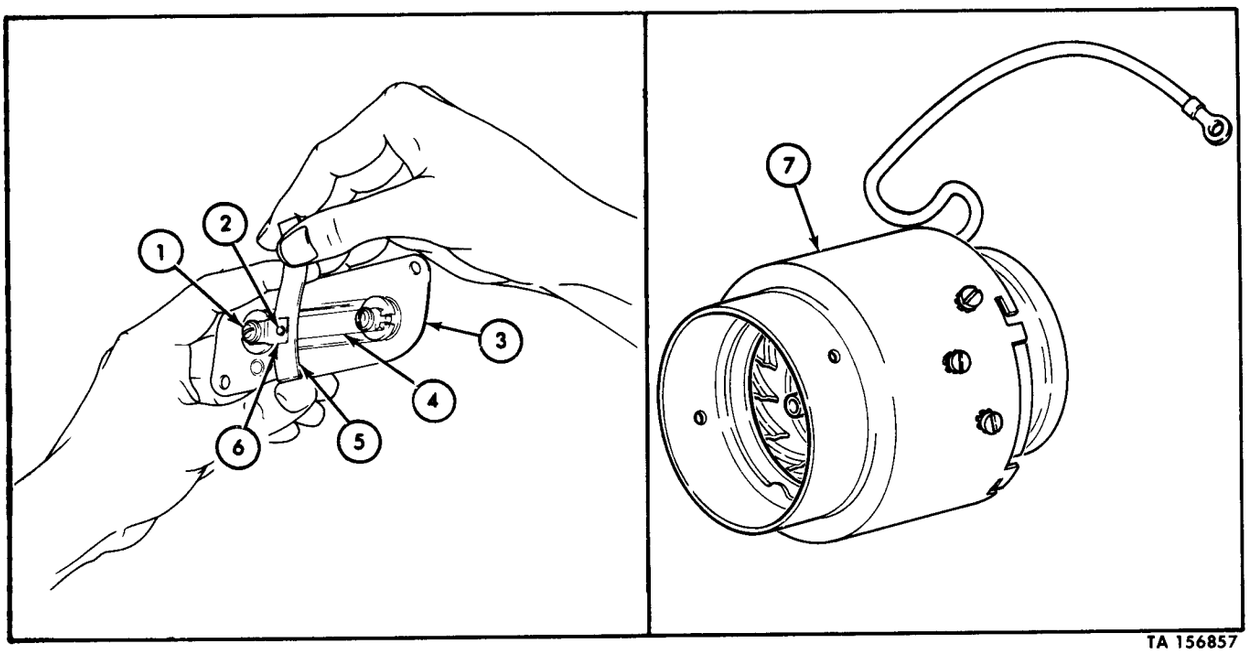

TA 156857

16-14. Heater Assembly Cleaning, Inspection, and Testing (Cont'd)

STEP NO.	LOCATION	ITEM	ACTION	REMARKS
3.		Fuel control valve assembly (1)	*a.* Clean with compressed air.	
			b. Inspect for broken wires (2) and damage.	If wires (2) are broken or assembly (1) is damaged, replace control valve assembly (1).
4.	Burner assembly header plate and bushing (5) to burner cup and stud assembly (3)	Three nuts (7) and star lockwashers (8)	Remove.	
5.		Header plate and bushing (5)	Remove from burner cup and stud assembly (3).	
6.		Burner cup and stud assembly (3) and header plate and bushing (5)	Scrape residue and carbon from inside cup (9), fuel feed bushing (6), and other burner surfaces.	
7.		Header plate and bushing (5)	*a.* Aline holes with burner cup studs (4).	
			b. Secure to studs (4) with three star lockwashers (8) and nuts (7).	

b. TESTING

WARNING

Do not touch igniter (13) during test. Allow enough time for igniter (13) to return to ambient temperature before removing test equipment, or severe injury will result.

8.		Igniter assembly (13)	*a.* Inspect for broken wires (11) and burned out igniter element (12).	Replace assembly (13) if wires are broken or if igniter element (12) is burned out.
			b. Check for proper resistance using multimeter (10).	Resistance should be 2.2 ohms.

16-14. Heater Assembly Cleaning, Inspection, and Testing (Cont'd)

STEP NO.	LOCATION	ITEM	ACTION	REMARKS
9.		24-volt DC power source (14) and ammeter (15)	*a.* Connect to igniter terminal (16).	Make sure igniter (13) is grounded.
			b. Apply voltage to igniter (13).	Igniter (13) should draw 10.5 amperes and element (12) should heat to a bright red color in a few seconds. If igniter (12) fails to heat up, replace.

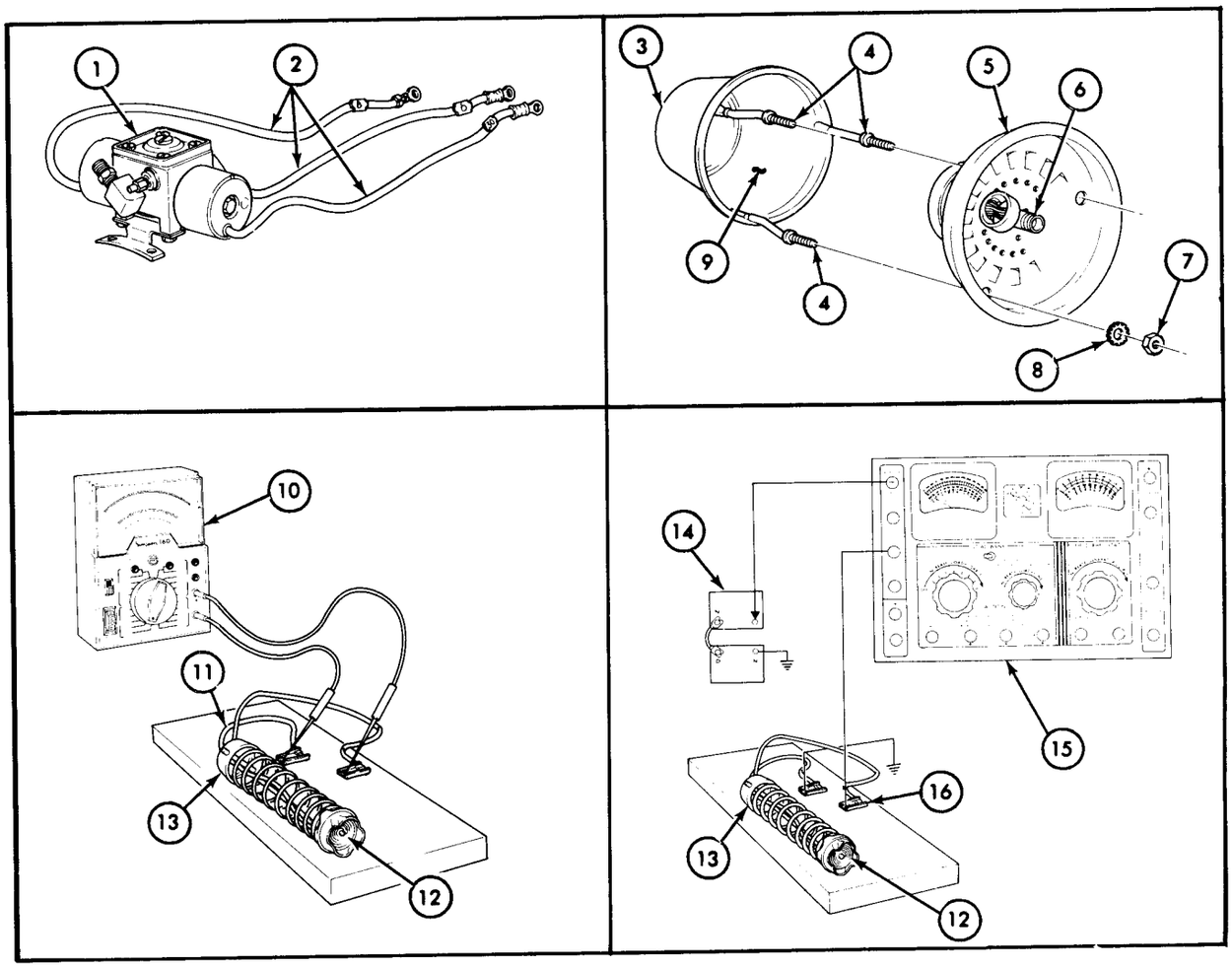

END OF TASK!

FOLLOW-ON TASK: Reassemble heater (para 16-15).

TA 156858

16-15. Heater Reassembly

This task covers:

Reassembly

INITIAL SETUP:

Applicable Models	Equipment Condition Reference	Condition Description
M151A2		None

Test Equipment
None

Special Tools
None

Special Environmental Conditions
None

Materials/Parts
Preformed packing
Gasket
Three star lockwashers

Personnel Required
One mechanic

General Safety Instructions
None

Manual References
TM 9-2320-218-34P

STEP NO.	LOCATION	ITEM	ACTION	REMARKS
REASSEMBLY				
1.		Heater casing (3)	Spread apart just enough to clear heat exchanger exhaust tube (9).	
2.		Heat exchanger (1)	Insert in heater casing (3).	Make sure exhaust tube (9) and flame detector connection tube (2) extend through casing (3) holes.
3.		Heater casing (3)	Close and secure with three screw-assembled lockwashers (8).	
4.		New preformed packing (5) and new gasket (4)	Place on burner assembly sealer flange (6).	
5.		Burner assembly (7)	Position sealer flange (6) on heat exchanger (1) and secure with four hookbolts (15), clamps (16), and nut-assembled lockwashers (14).	

16-15. Heater Reassembly (Cont'd)

STEP NO.	LOCATION	ITEM	ACTION	REMARKS
6.		Burner assembly ground wire (12)	*a.* Secure to hook bolt (15) with nut-assembled lockwasher (13). *b.* Secure to heater casing (3) with screw-assembled lockwasher (10) and nut-assembled lockwasher (11).	

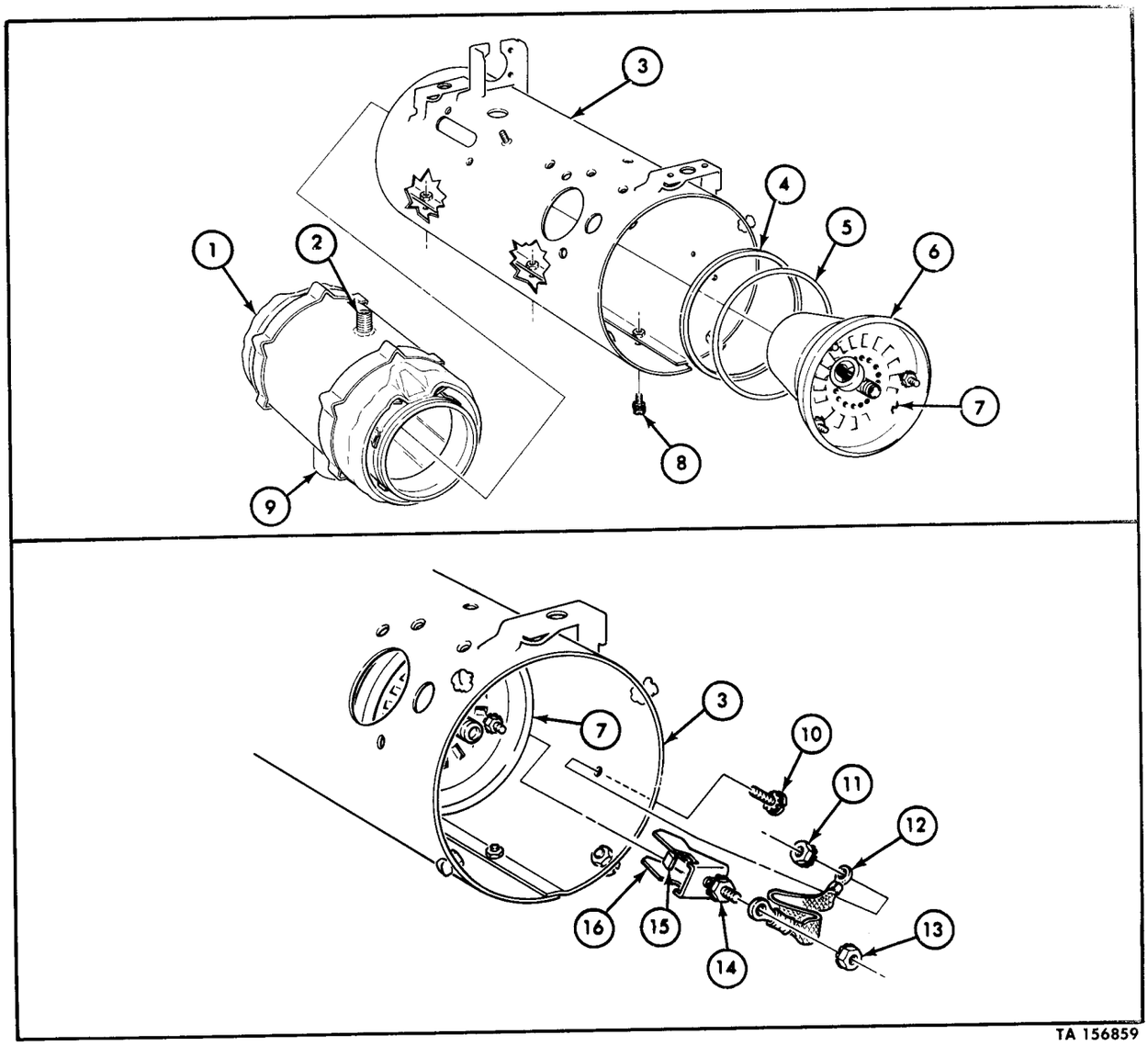

TA 156859

16-15. Heater Reassembly (Cont'd)

STEP NO.	LOCATION	ITEM	ACTION	REMARKS
7.		MS receptacle (2)	Secure to receptacle mounting bracket (3) with four screw-assembled lockwashers (1).	

CAUTION

The overheat switch (12) is adjusted and sealed by the manufacturer. Do not bend or twist switch (12). Do not change setting of adjustment screw (13).

8.		Overheat switch (12)	Secure to heater casing (11) with two screw-assembled lockwashers (4).	
9.		Flame detector switch (7)	Insert expansion tube (9) in heat exchanger tube (10) and secure with nut (8).	
10.		Two receptacle "NC" wires (5)	Secure to "NC" locations on flame detector switch (7) with two screw-assembled lockwashers (6).	

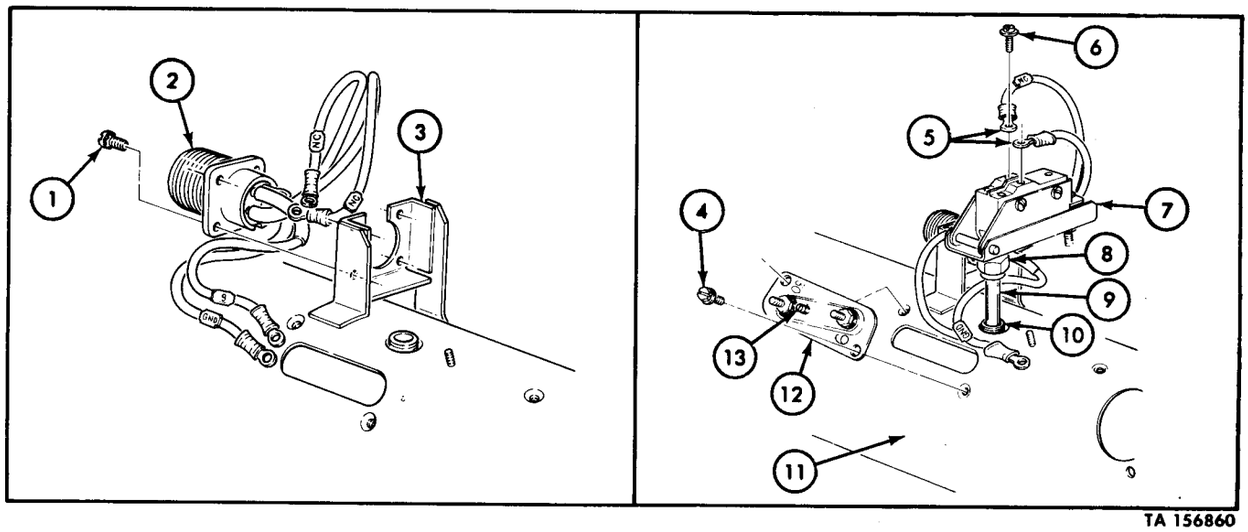

TA 156860

16-15. Heater Reassembly (Cont'd)

STEP NO.	LOCATION	ITEM	ACTION	REMARKS
11.		Ignition control assembly (16)	Secure to heater casing (11) with three screw-assembled lockwashers (17).	
12.		Two ignition control "NO" wires (14)	Secure to "NO" locations on flame detector switch (7) with two screw-assembled lockwashers (15).	
13.		Secondary blower housing (20)	Place into position on burner assembly (19).	
14.		Fuel tube assembly (22)	*a.* Insert into secondary blower housing (20). *b.* Connect to burner fuel inlet (18) and tighten nut (21).	

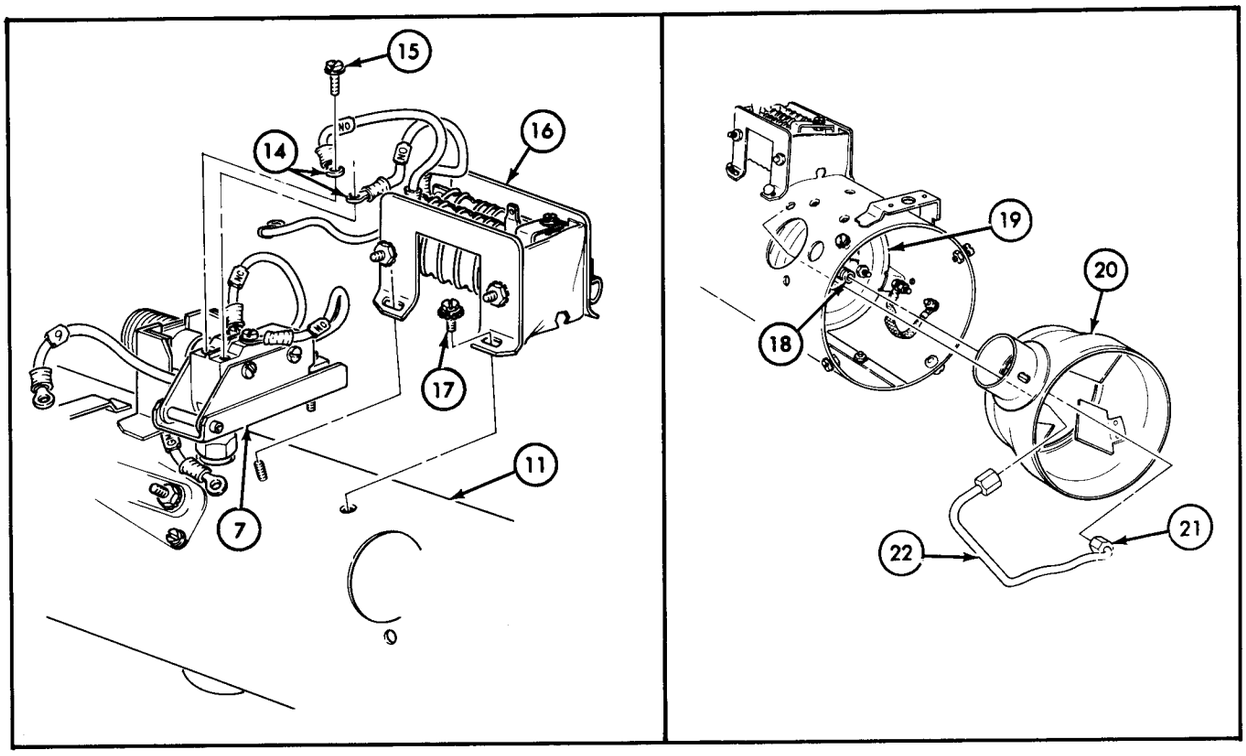

TA 156861

16-15. Heater Reassembly (Cont'd)

STEP NO.	LOCATION	ITEM	ACTION	REMARKS
15.		Igniter tube (6)	Place in secondary blower housing (5) and secure with screw-assembled lockwasher (4).	
16.		Igniter (7)	*a.* Insert in igniter tube (6). *b.* Press down and turn clockwise to secure in igniter tube bayonet slots (2).	
17.		Hatch cover (8)	*a.* Aline to holes in heater casing (3). *b.* Twist two fly-screws (1) clockwise to secure.	

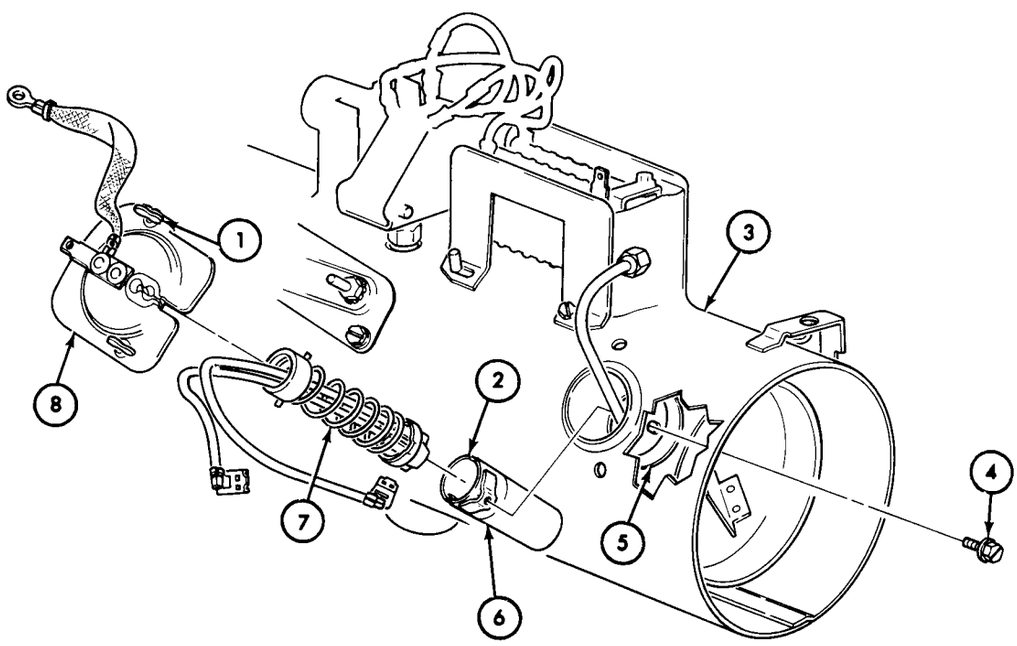

TA 156862

16-15. Heater Reassembly (Cont'd)

STEP NO.	LOCATION	ITEM	ACTION	REMARKS
18.		Short igniter lead wire (15)	Secure to hatch cover terminal (13) with slip-on clip (14).	
19.		Long igniter lead wire (12)	Secur to ignition control terminal (10) with slip-on clip (11).	
20.		Igniter ground terminal lead wire (17) and heater receptacle ground wire (19)	Secure to ignition control mounting stud (16) with new star lock-washer (18) and nut-assembled lockwasher (9).	
21.		Fuel control valve (21)	Secure to heater casing (3) with four screw-assembled lockwashers (22).	
22.		Fuel tube (23)	Connect to control valve outlet (20) and tighten nut (24).	

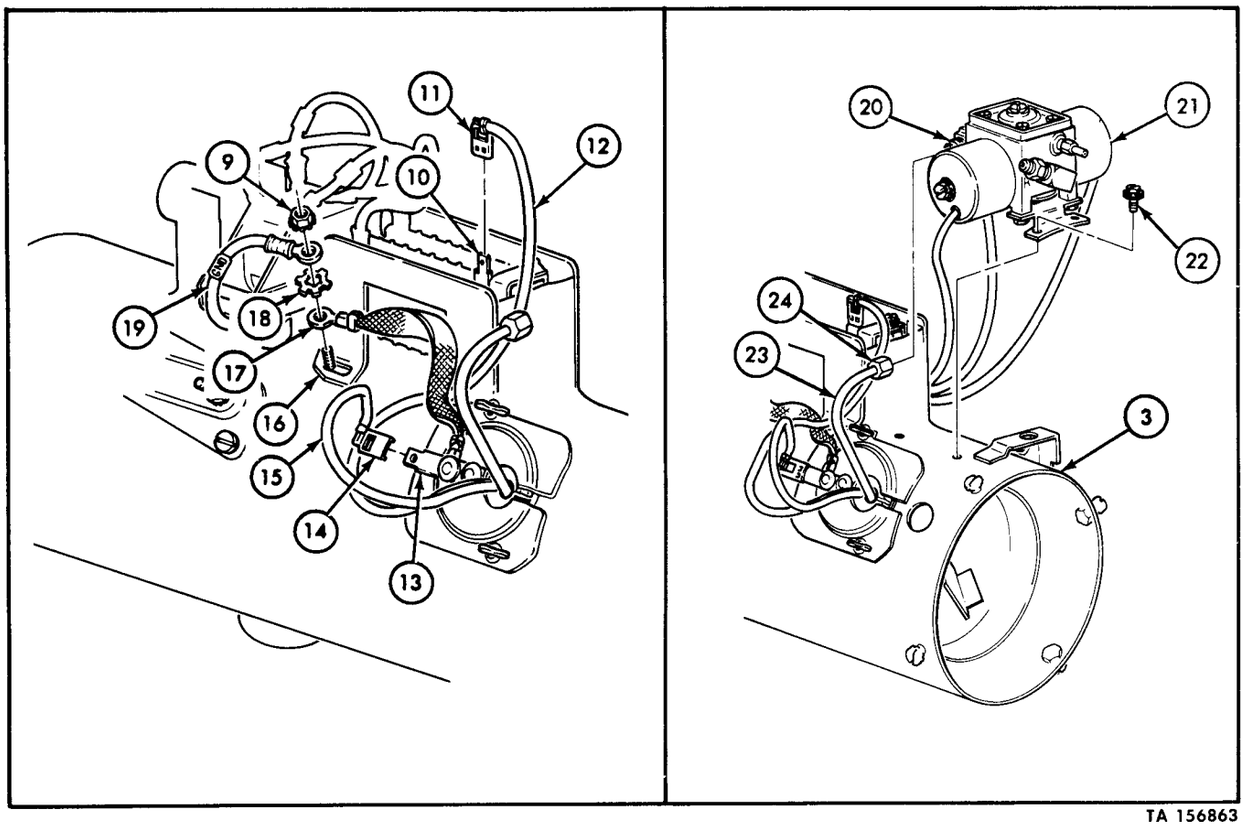

TA 156863

16-15. Heater Reassembly (Cont'd)

STEP NO.	LOCATION	ITEM	ACTION	REMARKS
23.		Thermostat lead wire 9 (5)	Slide through retainer clamp (13).	
24.		Ignition control lead wire 9 (7), receptacle lead wire 9 (9) and thermostat lead wire 9 (5)	Secure to overheat switch stud (6) with two new star lockwashers (8) and one nut-assembled lockwasher (4).	
25.		Shutoff solenoid lead wire 30 (2)	Slide through retainer clamp (13) and secure to overheat switch stud (3) with nut-assembled lockwasher (1).	
26.		Restriction solenoid lead wire B (11)	Slide through retainer clamp (13) and secure to receptacle terminal (12) with screw-assembled lockwasher (10).	

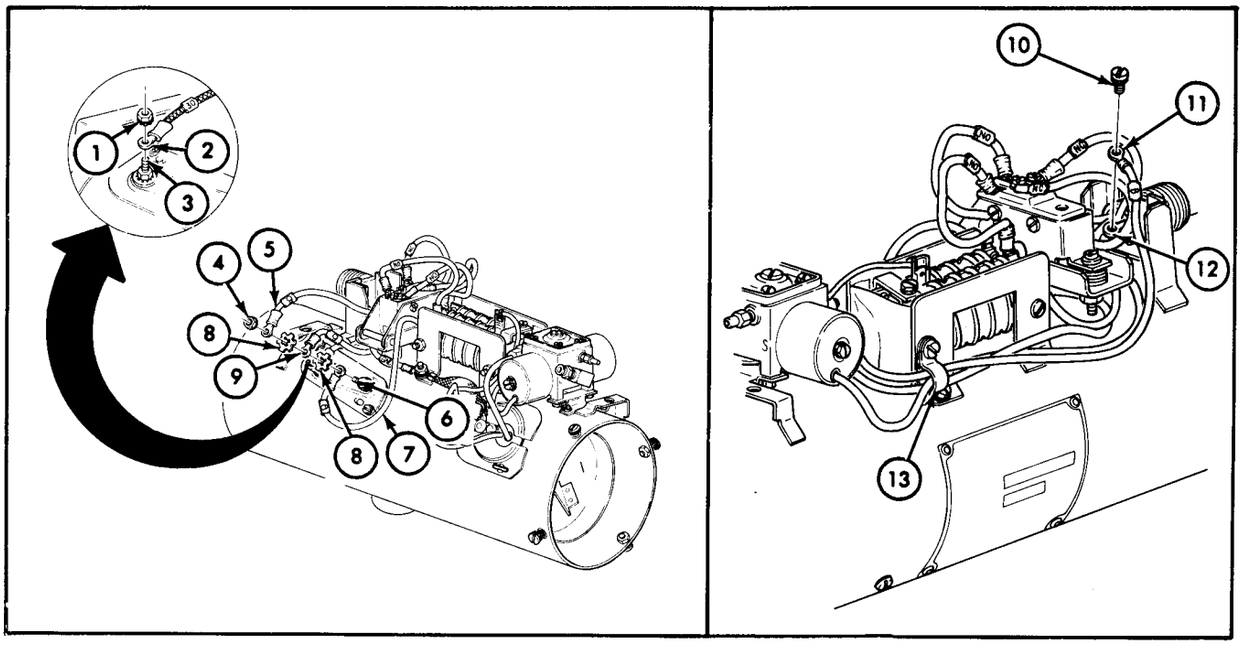

27.		Blower motor lead wire grommet (15)	Install in heater casing (17).	
28.		Blower motor lead wire (14)	Push through grommet (15) from inside heater casing (17) and pull outside.	

TA 156864

16-15. Heater Reassembly (Cont'd)

STEP NO.	LOCATION	ITEM	ACTION	REMARKS
29.		Blower assembly (20)	*a.* Position to secondary blower housing (18) and aline bayonet slots (19) with four screw-assembled lockwashers (16) on heater casing (17). *b.* Turn clockwise and tighten four screw-assembled lockwashers (16).	
30.		Blower motor lead wire (14)	Slide through retainer clamp (13) and secure to flame detector switch (23) with screw-assembled lockwasher (22).	
31.		Cover assembly (21)	*a.* Aline two dzus fasteners (25) with holes in two heater casing mounting brackets (24). *b.* Turn two dzus fasteners (25) clockwise to fasten.	

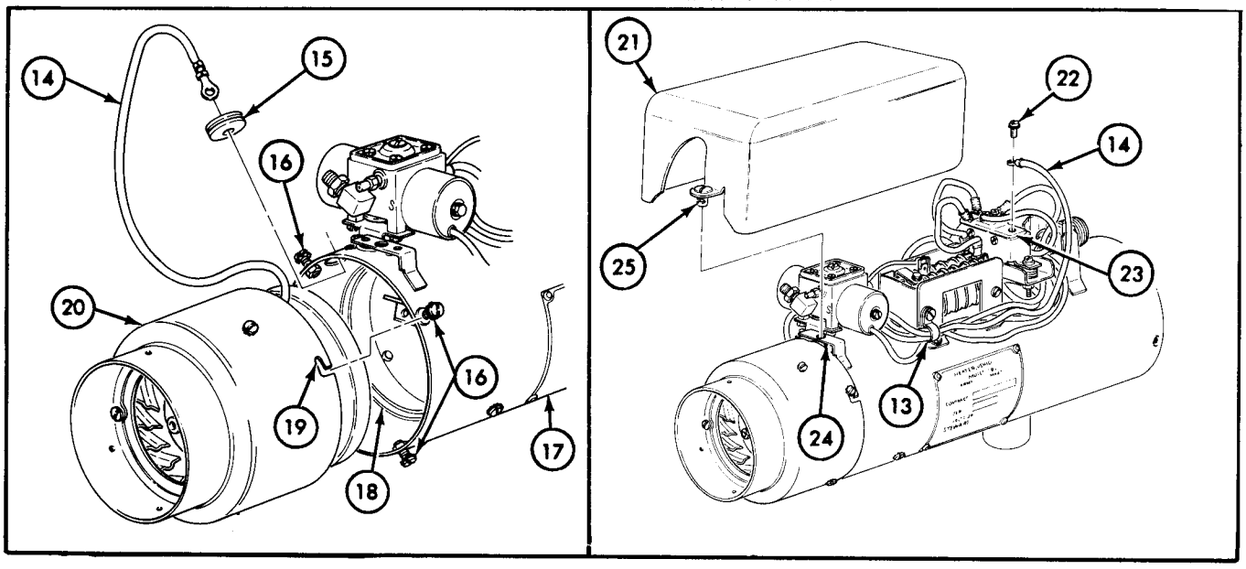

END OF TASK!

FOLLOW-ON TASK: Install heater (TM 9-2320-218-20-1-2).

TA 156865

16-16. Flame Detector Switch Maintenance

This task covers:

a. Removal
b. Disassembly
c. Cleaning and Inspection
d. Reassembly
e. Adjustment
f. Installation

INITIAL SETUP:

Applicable Models	Equipment Condition Reference	Condition Description
M151A2		None

Test Equipment
None

Special Tools
None

Special Environmental Conditions
None

Materials/Parts
Insulating varnish (NSN 5970-00-296-1158)
Four lockwashers

Personnel Required
One mechanic

General Safety Instructions
Always wear safety goggles when using compressed air.

Manual References
TM 9-2320-218-34P

STEP NO.	LOCATION	ITEM	ACTION	REMARKS
a. REMOVAL				
1.	Heater guard (1) to heater guard brackets (5)	Four screws (2) and lockwashers (3)	Remove.	Discard lockwashers (3).
2.		Heater guard (1)	Remove from heater guard brackets (5).	
3.	Heater cover assembly (4) to heater casing (6)	Two dzus fasteners (7)	Turn counterclockwise to unfasten.	
4.		Heater cover assembly (4)	Remove from heater casing (6).	
5.	Blower motor lead wire (12) to flame detector switch (13)	Screw-assembled lock-washer (11)	Remove and disconnect lead wire (12).	
6.	Two ignition control "NO" wires (8) to flame detector switch (13)	Two screw-assembled lockwashers (9)	Remove and disconnect wires (8).	

16-16. Flame Detector Switch Maintenance (Cont'd)

STEP NO.	LOCATION	ITEM	ACTION	REMARKS
7.	Two receptacle "NC" wires (14) to flame detector switch (13)	Two screw-assembled lockwashers (10)	Remove and disconnect wires (14).	

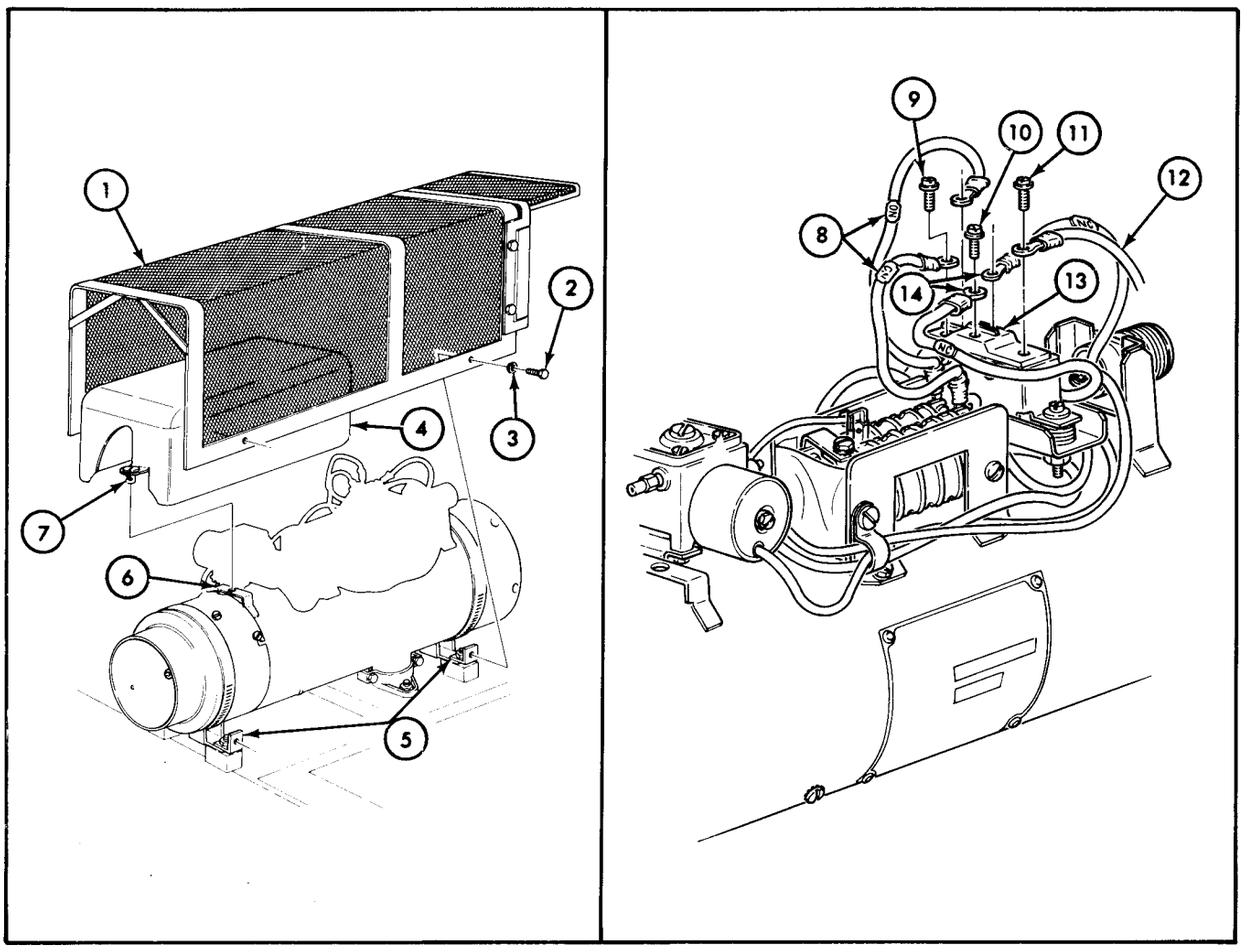

TA 156866

16-16. Flame Detector Switch Maintenance (Cont'd)

STEP NO.	LOCATION	ITEM	ACTION	REMARKS
8.	Flame detector switch (2) to heat exchanger (3)	Nut (1)	Unscrew.	
9.		Flame detector switch (2)	Remove from heat exchanger (3).	
	b. DISASSEMBLY			
10.	Flame detector switch (2)	Adjusting screw (6), washer (5), and spring (10)	Remove.	
11.		Micro-switch (7)	Lift and tip back on bracket (9).	

CAUTION

Use extreme care when handling ceramic rod (4) to prevent breakage.

NOTE

Be sure micro-switch (7) is tipped back far enough to allow ceramic rod (4) free passage for removal.

12.		Flame detector switch (2)	Turn upside down and slide ceramic rod (4) out of expansion tube (8).	
	c. CLEANING AND INSPECTION			

WARNING

Compressed air source will not exceed 30 psi. When cleaning with compressed air, eyeshields must be worn. Failure to wear eyeshields may result in injury to the eyes and loss of sight.

13.		Flame detector switch (2)	Clean with compressed air.	
14.		Ceramic rod (4)	Inspect for cracks, chips, and breakage.	Replace if cracked, chipped or broken.

16-16. Flame Detector Switch Maintenance (Cont'd)

STEP NO.	LOCATION	ITEM	ACTION	REMARKS
d. REASSEMBLY				
15.		Ceramic rod (4)	Insert in expansion tube (8).	
16.		Micro-switch (7)	Tip back into position on bracket (9).	
17.		Spring (10), washer (5), and adjusting screw (6)	Install in flame detector switch (2).	
e. ADJUSTMENT				
18.		Adjusting screw (6)	*a.* Turn clockwise until "click" is heard.	Mark this position.
			b. Make an additional 1/2 turn from "click" position.	
			c. Seal in place.	Use insulating varnish.

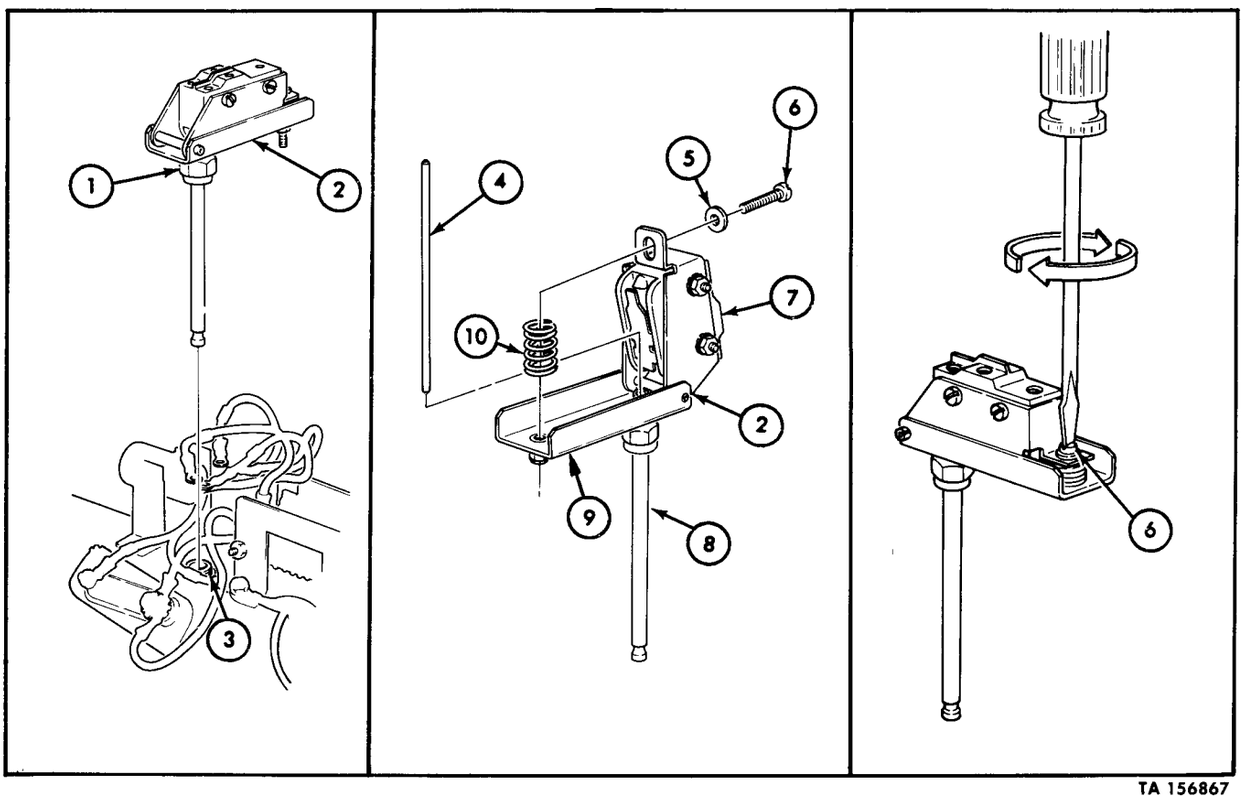

TA 156867

16-16. Flame Detector Switch Maintenance (Cont'd)

STEP NO.	LOCATION	ITEM	ACTION	REMARKS
f. INSTALLATION				
19.		Flame detector switch expansion tube (3)	Insert in heat exchanger (4).	
20.		Flame detector switch (2)	Secure to heat exchanger (4) with nut (1).	
21.		Two receptacle "NC" wires (10)	Secure to flame detector switch (2) with two screw-assembled lock-washers (7).	
22.		Two ignition control "NO" wires (5)	Secure to flame detector switch (2) with two screw-assembled lock-washers (6).	
23.		Blower motor lead wire (9)	Secure to flame detector switch (2) with screw-assembled lockwasher (8).	

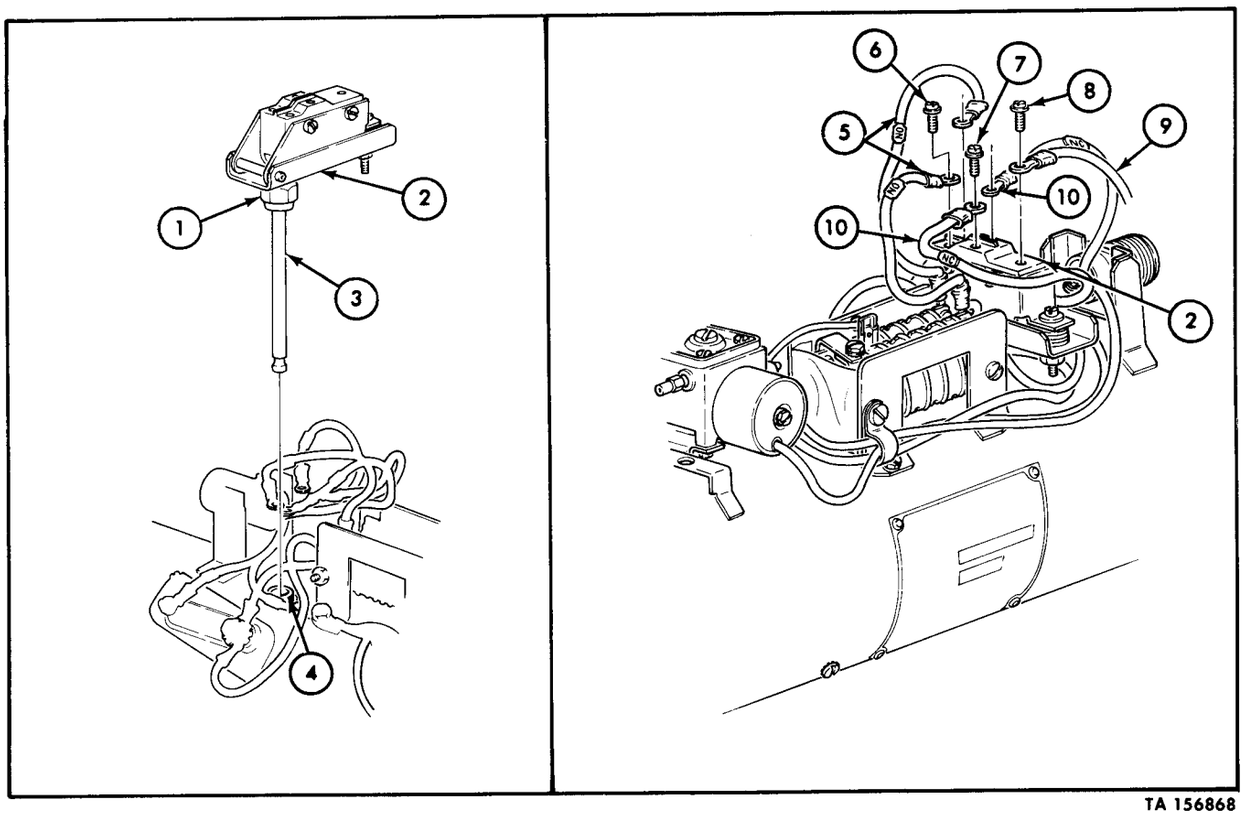

TA 156868

16-16. Flame Detector Switch Maintenance (Cont'd)

STEP NO.	LOCATION	ITEM	ACTION	REMARKS
24.		Heater cover assembly (14)	Position on heater casing (16) and secure by turning two duzs fasteners (17) clockwise.	
25.		Heater guard (11)	Secure to heater guard brackets (15) with four new lockwashers (13) and capscrews (12).	

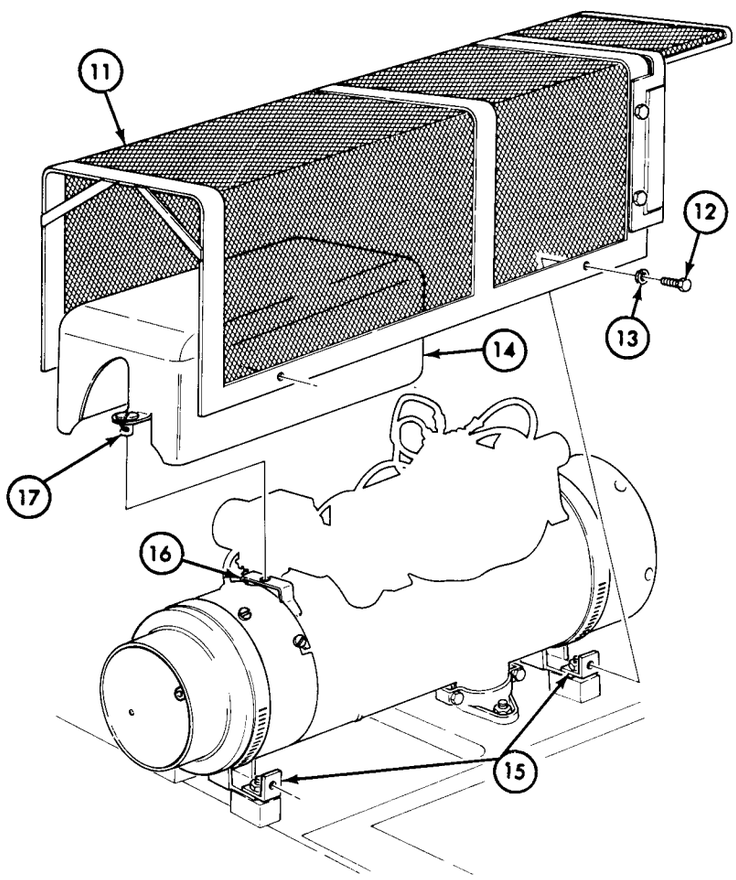

END OF TASK!

TA 156869

16-17. Heater Fuel Pump Maintenance

This task covers:

a. Disassembly
b. Cleaning and Inspection
c. Assembly

INITIAL SETUP:

Applicable Models
M151A2

Test Equipment
None

Special Tools
None

Materials/Parts
Drycleaning solvent

Personnel Required
One mechanic

Manual References
TM 9-2320-218-34P

Equipment Condition Reference	Condition Description
	None

Special Environmental Conditions
Well-ventilated work area.

General Safety Instructions
Keep fire extinguisher nearby when using drycleaning solvent.

STEP NO.	LOCATION	ITEM	ACTION	REMARKS
	a. DISASSEMBLY			
1.	Cover and plunger assembly (1)	Bottom cover (6) and cover gasket (5)	Twist clockwise and remove.	
2.	Bottom cover (6)	Magnet (4) and filter (3)	Remove.	
	b. CLEANING AND INSPECTION			

WARNING

Drycleaning solvent is highly flammable and will not be used near an open flame. A fire extinguisher will be kept nearby when solvent is used Use only in well-ventilated places. Faiure to do this will result in injury to personnel and/or damage to equipment.

16-17. Heater Fuel Pump Maintenance (Cont'd)

STEP NO.	LOCATION	ITEM	ACTION	REMARKS
3.		Fuel filter (3)	*a.* Clean with drycleaning solvent.	
			b. Inspect for distorted or collapsed screen.	Replace if screen is distorted or collapsed.
4.		Cover and plunger assembly (1)	Clean with drycleaning solvent.	
5.		Fuel lines (2)	Inspect for cracks and leaks.	Replace if cracked or leaking.
c. ASSEMBLY				
6.		Bottom cover (6), cover gasket (5), magnet (4) and filter (3)	*a.* Assemble and position to cover and plunger assembly (1).	
			b. Twist bottom cover (6) counterclockwise to secure.	

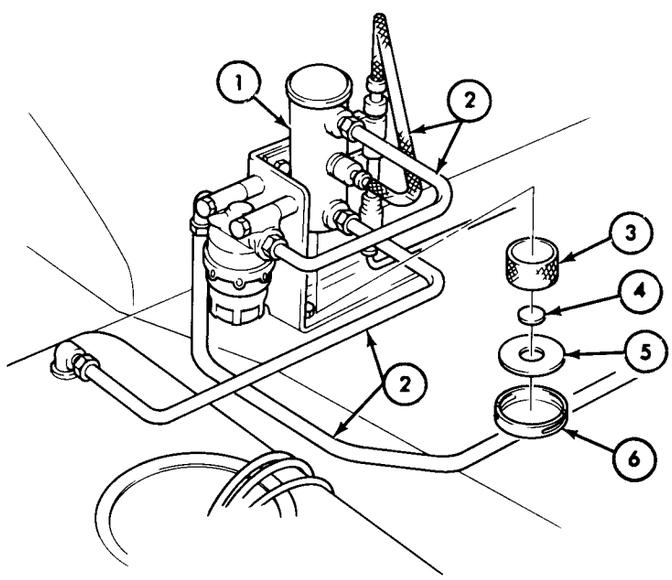

END OF TASK!

FOLLOW-ON TASK: Start heater (TM 9-2320-218-10) and check for leaks at fuel line connections.

TA 156870

16-18. Heater Assembly Bench Test and Adjustments

This task covers:

a. Testing *b. Adjustment*

INITIAL SETUP:

Applicable Models	Equipment Condition Reference	Condition Description
M151A2		None

Test Equipment

24-volt dc power source
Fuel container (1 gallon)
Graduated beaker (50 cc)
Ammeter (50 amp)
Stopwatch

Special Tools

None

Special Environmental Conditions

Well-ventilated work area.

Materials/Parts

Insulating varnish (NSN 5970-00-296-1198)

Personnel Required

One mechanic

General Safety Instructions

- Do not perform this procedure near open flames or sparks.
- Exhaust fumes must be routed away from work area.

Manual References

TM 9-2320-218-34P

STEP NO.	LOCATION	ITEM	ACTION	REMARKS

a. TESTING

WARNING

- Fuel must be kept away from open flame or sparks. Fire and severe injury will result.
- Exhaust fumes can kill. Testing will be performed in a well ventilated work area and exhaust fumes must be routed away from test area.

16-18. Heater Assembly Bench Test and Adjustment (Cont'd0

STEP NO.	LOCATION	ITEM	ACTION	REMARKS

NOTE

- Bench test equipment consists of 1 gallon (3.785 liters) fuel container (1), 50 cc graduated beaker (2), two shutoff valves (10), 50 amp ammeter (8), and 24 volt DC power source (7).
- Fuel pump (3), fuel filter (4), heater assembly (5), control box (9), and wiring harness (6) will be the same as those used in vehicle.
- Prior to starting test, bleed air from fuel lines.
- Make sure heater (5) is placed in its normal operating position in holding fixture.

1.		Heater assembly (5)	Connect to testing equipment as shown in illustration below.	

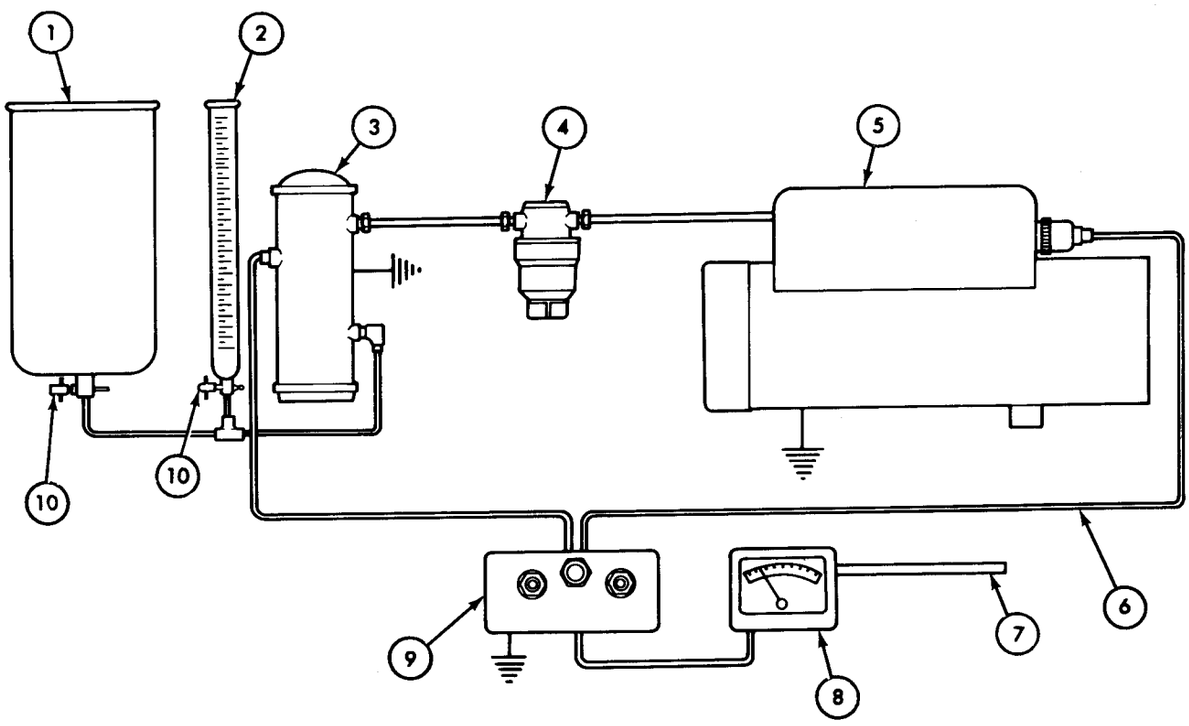

TA 156871

16-18. Heater Assembly Bench Test and Adjustment (Cont'd)

STEP NO.	LOCATION	ITEM	ACTION	REMARKS
2.		Graduated beaker shut-off valve (9)	Close.	
3.		Fuel container shutoff valve (10)	Open.	
4.		Control box HI-LO switch (7)	Place in LO position.	
5.		START-OFF-RUN switch (5)	Hold in START position and record ignition time.	Ignition time should not exceed 3 minutes.
		NOTE		
		Ignition time is time lapsed from positioning switch (5) in START position until lamp (6) on control box (8) illuminates.		
6.		Ammeter (4)	Record ignition amperage.	Ignition amperage should not exceed 15 amperes.
7.		START-OFF-RUN switch (5)	When lamp (6) illuminates, position to RUN.	
8.		Fuel container shutoff valve (10)	Close.	
9.		Graduated beaker shut-off valve (9)	Open and fill with fuel.	
10.		Heater (2)	Allow to operate for 30 seconds.	
11.		Graduated beaker (1)	Check fuel consumption for one minute with stop-watch.	Fuel consumption should be 14 to 16 cc per minute.
12.		HI-LO switch (7)	Position to HI and allow heater (2) to stabilize at this output level.	
13.		Exhaust outlet (3)	Observe for smoke.	
		NOTE		
		Any visible smoke after three minutes of operation is not acceptable. Observe for low voltage, a slow-running motor, or an uncalibrated fuel control valve. Visible smoke up to three minutes after switch (7) is positioned on HI is normal.		

16-18. Heater Assembly Bench Test and Adjustment (Cont'd)

STEP NO.	LOCATION	ITEM	ACTION	REMARKS
14.		Graduated beaker (1)	*a.* Fill with fuel.	
			b. Check fuel consumption with stopwatch.	Fuel consumption should be 21 to 23 cc per minute.
15.		Graduated beaker shutoff valve (9)	Close.	
16.		Fuel container shutoff valve (10)	Open.	

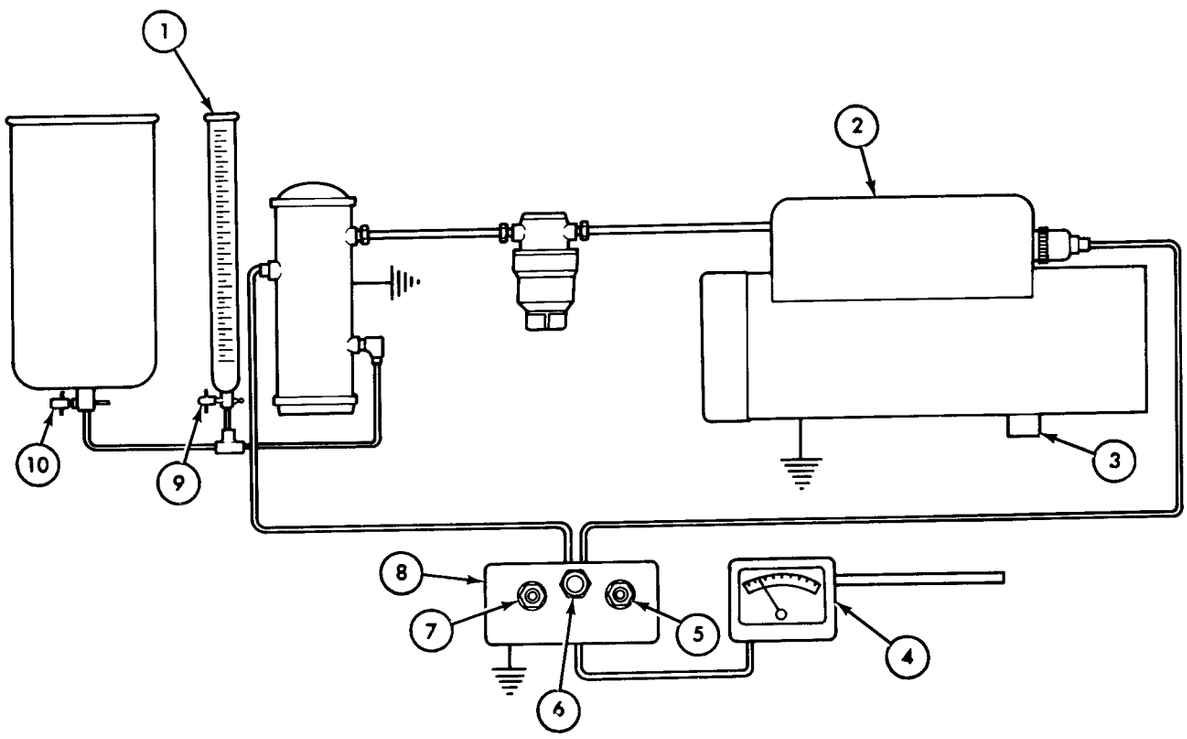

TA 156872

16-18. Heater Assembly Bench Test and Adjustment (Cont'd)

STEP NO.	LOCATION	ITEM	ACTION	REMARKS
17.		Ammeter (3)	Record operating amperage.	Operating amperage should not exceed 5.5 amperes.
18.		START-OFF-RUN switch (4)	Position to OFF.	
19.		Control box lamp (5)	Observe and record purge time.	Purge time should not exceed four minutes.
			NOTE Purge time is the time lapsed from positioning switch (4) in OFF position until lamp (5) on control box (6) goes out.	
20.		Heater (1)	*a.* Start.	
			b. Partially restrict fresh air inlet (2) with piece of cardboard or sheet metal.	Overheat switch on heater (1) should actuate and shut down heater in less than five minutes.

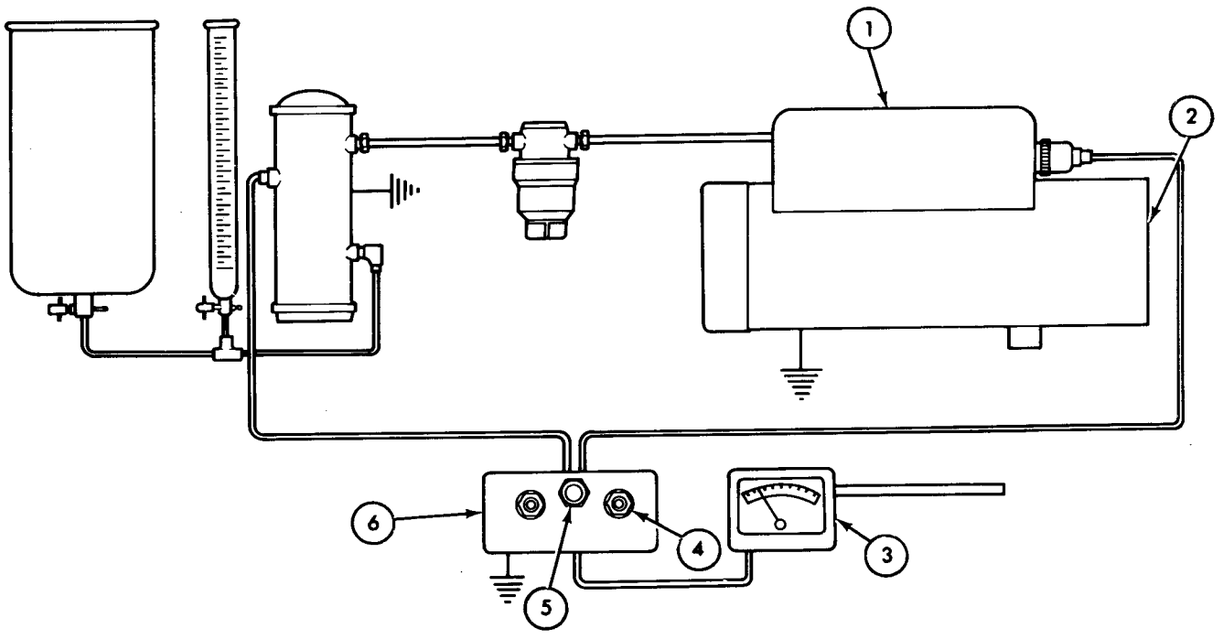

TA 156873

16-18. Heater Assembly Bench Test and Adjustment (Cont'd)

STEP NO.	LOCATION	ITEM	ACTION	REMARKS
	b. ADJUSTMENT			

NOTE

If heater (1) does not operate properly, check flame detector switch (7) for proper adjustment.

CAUTION

Flame detector switch (7) adjustment must be done with heater (1) and switch (7) cold.

21.	Flame detector switch (7)	*a.* Turn adjusting screw (8) counterclockwise several turns.	
		b. Turn adjusting screw (8) clockwise until "click" is heard.	Mark exact screw slot position where this happens.
		c. Make an additional ½ turn from "click" position.	
		d. Seal in place.	Use insulating varnish.

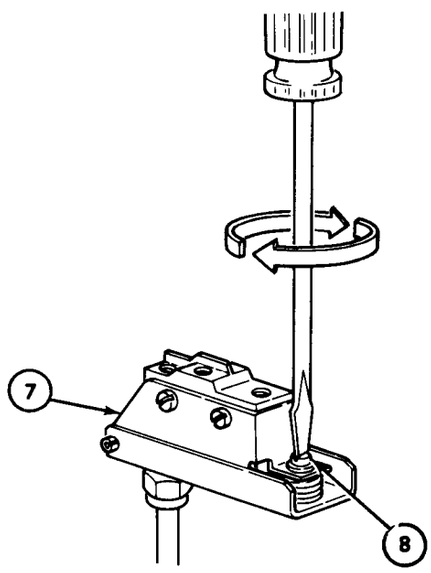

END OF TASK!

TA 156874

Section II. HOT WATER HEATER KIT -25°F (-32°C) MAINTENANCE

16-19. General

The hot water heater kit -25°F (-32°C) installation consists of three subassembly installations: slave receptacle, brush guard cover, and heater and diverter. This section provides maintenance procedures assigned to the direct and general support levels for this kit. To find a specific procedure, see the maintenance task summary.

NOTE

It is necessary to follow the sequence of paragraph subassembly installation procedures to accomplish complete installation of kit.

16-20. Description and Data

a. Description. The hot water kit -25°F (-32°C) includes a crew compartment heater with defroster, a slave receptacle, and a brush guard cover. The kit is for use on vehicles operated in areas where the normal temperature during the coldest part of the year is above -25°F (-32° C). Vehicles with a canvas passenger compartment enclosure may be equipped with this heater. Vehicles equipped with this kit may be used for deep water fording when the deep water fording kit is installed.

b. Tabulated Data. Hot water heater -25°F (-32°C) assembly data is found in table 16-2.

Table 16-2. Tabulated Data — Hot Water Heater Kit -25° F (-32° C)

	STANDARD	METRIC
Heater model number	MS51326-1	
Blower motor electrical requirements:		
Maximum volts	28	
Minimum volts	18	
Amperes at 24 volts	4.5 amperes	
Blower motor resistor	5 ohm	
Switch type	SPDT (center off)	
Water capacity	1 qt	0.946 l
Weight of kit	105 lb	47.670 kg
Free air delivery	200 cfm	94.400 cu cms/second
Air temperature, rise	100°F	37.7°C
Core size	5-13/16 x 6-1/2 x 8-7/16 in.	147.64 x 165.10 x 203.64 mm
Hot water hose:		
Inside diameter	5/8 in.	0.625 mm
Length	55 in.	1397.0 mm
Defroster and drive heat air hose lengths:		
Diverter to left defroster	39 in.	990.58 mm
Diverter to right defroster	7.5 in.	190.0 mm
Diverter to driver heat discharge	36 in.	914.38 mm

16-21. Preventive Maintenance

See TM 9-2320-218-20-1.

16-22. Troubleshooting

See TM 9-2320-218-10 and TM 9-2320-218-20-1.

NOTE

If a required new part is not available, reconditioning of the old part is permissable. Parts should be examined carefully after reconditioning to determine useability. When disassembling a unit, remove the major subassemblies whenever possible. Subassemblies may then be disassembled as necessary for repair. Unserviceable and unrepairable assemblies will be broken down into items of issue, and serviceable parts will be returned to stock.

16-23. Hot Water Heater Kit -25°(-32°C) Maintenance Task Summary

TASK PARA	PROCEDURES	PAGE NO.
16-24.	Heater Kit Installation a. Vehicle Preparation b. Drilling Instructions c. Electrical Wiring Assembly Installation d. Slave Cable Installation e. Defroster Nozzles and Hoses Installation f. Hot Water Hoses and Shutoff Cocks Installation g. Heater, Diverter, and Intake Duct Assembly and Installation	16-62
16-25.	Operating Test of Heater a. Operation of Heater b. Operation of Blower Motor	16-92

16-24. Heater Kit Installation

This task covers:

a. Vehicle Preparation
b. Drilling Instructions
c. Electrical Wiring Assembly Installation
d. Slave Cable Installation
e. Defroster Nozzles and Hoses Installation
f. Hot Water Hoses and Shutoff Cocks Installation
g. Heater, Diverter, and Intake Duct Assembly and Installation

INITIAL SETUP:

Applicable Models
All

Test Equipment
None

Special Tools
None

Materials/Parts
Sealer (NSN 8030-00-209-8010)

Personnel Required
One mechanic

Manual References
TM 9-2320-218-10
TM 9-2320-218-20-1
TM 9-2320-218-34P

Equipment Condition Reference	Condition Description
TM 9-2320-218-10	Parking brake set.
TM 9-2320-218-20-1	Cooling system drained.
TM 9-2320-218-20-1	Front seats removed.
TM 9-2320-218-20-1	Batteries removed.

Special Environmental Conditions
None

General Safety Instructions
Protective eye gear will be worn during all drilling operations.

STEP NO.	LOCATION	ITEM	ACTION	REMARKS

WARNING

Protective eye gear will be worn during all drilling operations.

a. VEHICLE PREPARATION

1.	Water pump (3) and cylinder head (1)	Two pipe plugs (2)	Remove.	

16-24. Heater Kit Installation (Cont'd)

STEP NO.	LOCATION	ITEM	ACTION	REMARKS

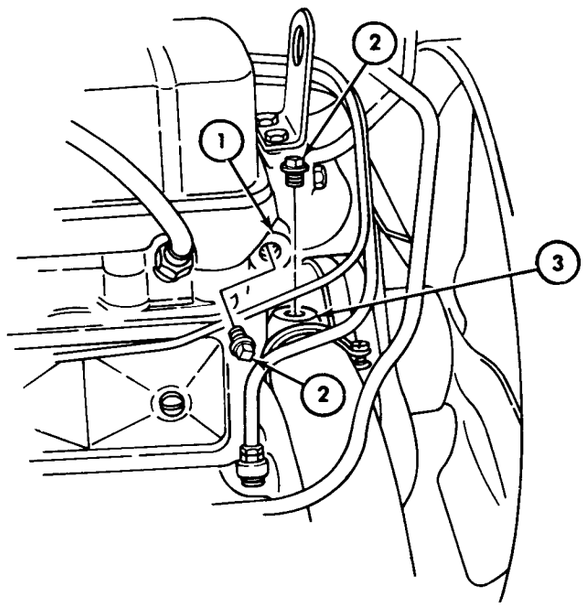

2.	Instrument cluster (6) to dash panel (7)	Four screws (4) and lockwashers (5)	Remove.
3.		Instrument cluster (6)	Pull away from dash panel (7).

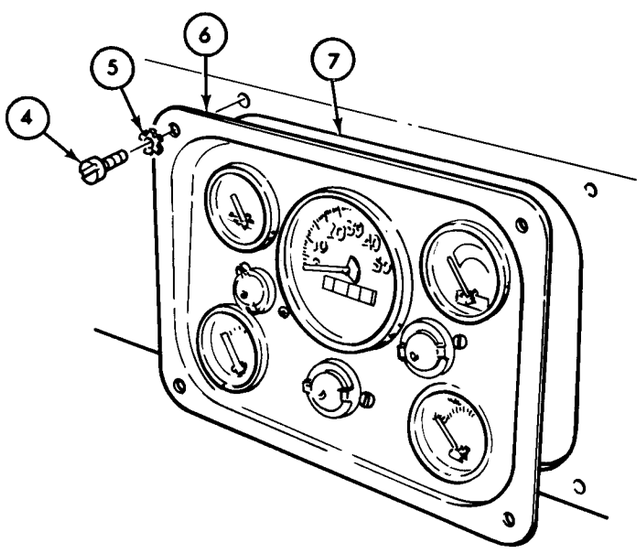

TA 156875

16-24. Heater Kit Installation (Cont'd)

STEP NO.	LOCATION	ITEM	ACTION	REMARKS
		CAUTION While disconnecting speedometer shaft assembly (5) from speedometer (2), make sure core cable (3) is not pulled away from shaft (5). This can cause core separation from transmission transfer.		
4.	Speedometer drive shaft assembly (5) to speedometer (2)	Speedometer drive shaft assembly nut (4)	Unscrew.	
5.		Speedometer drive shaft assembly (5)	Remove from speedometer (2).	
6.		Instrument cluster (1)	Pull down.	
7.	Top of dash panel (6)	Tape (7)	Remove from two defroster openings (8).	

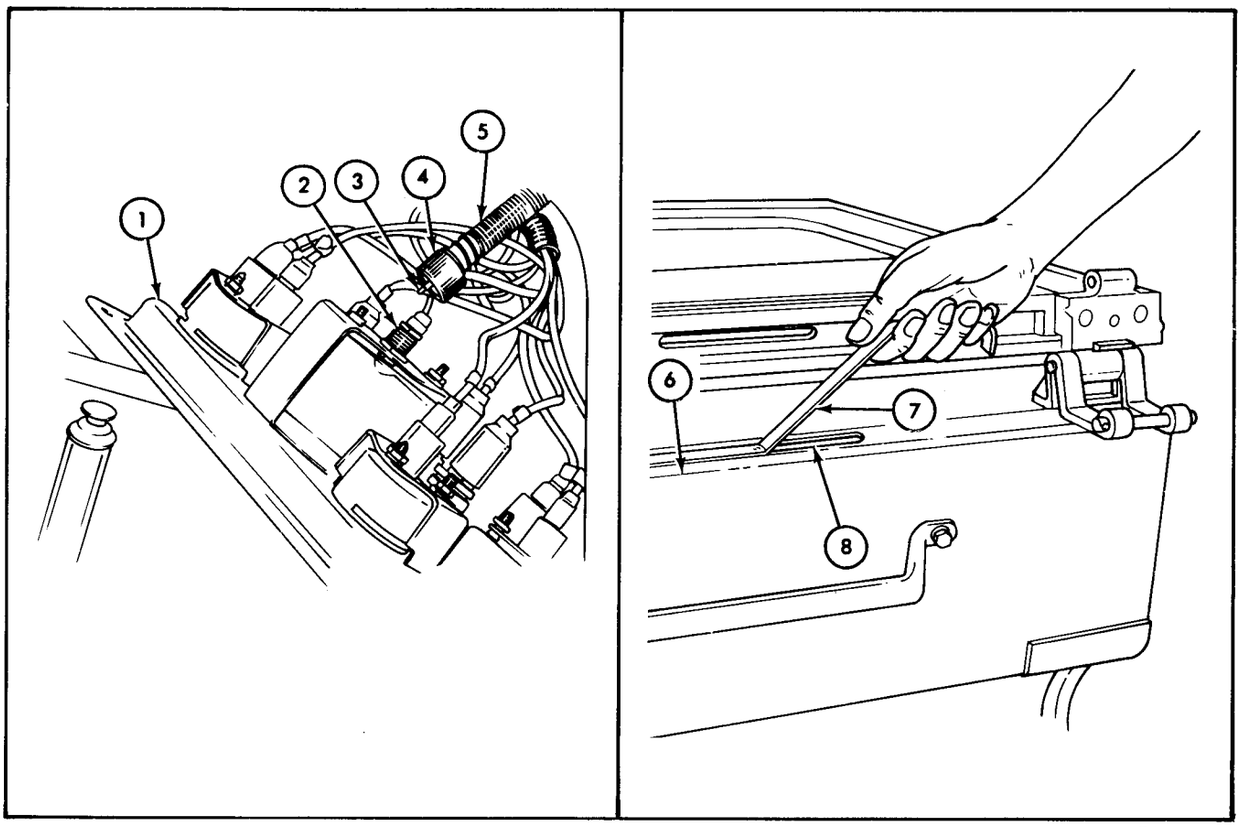

TA 156876

16-24. Heater Kit Installation (Cont'd)

STEP NO.	LOCATION	ITEM	ACTION	REMARKS

b. DRILLING INSTRUCTIONS

WARNING

Metal drilling creates small flying metal particles. Protective eye gear will be worn during all drilling operations.

8. Drill four 9/32 in. (7.14 mm) intake duct mounting holes as follows:

a. Measure 3-9/16 in. (90.49 mm) left from cowl right side sheet metal edge (11) and 2-1/2 in. (63.50 mm) forward from dash panel top edge (13).

b. Scribe one hole location (12).

c. Measure 2-45/64 in. (68.66 mm) forward from first hole location (12) and scribe second hole location (10).

d. Measure 6 in. (152.40 mm) left from first hole location (12) and scribe third hole location (14).

e. Measure 2-45/64 in. (68.66 mm) forward from third hole location (14) and scribe fourth hole location (9).

f. Drill four 9/32 in. (7.14 mm) holes at locations (9), (10), (12), and (14).

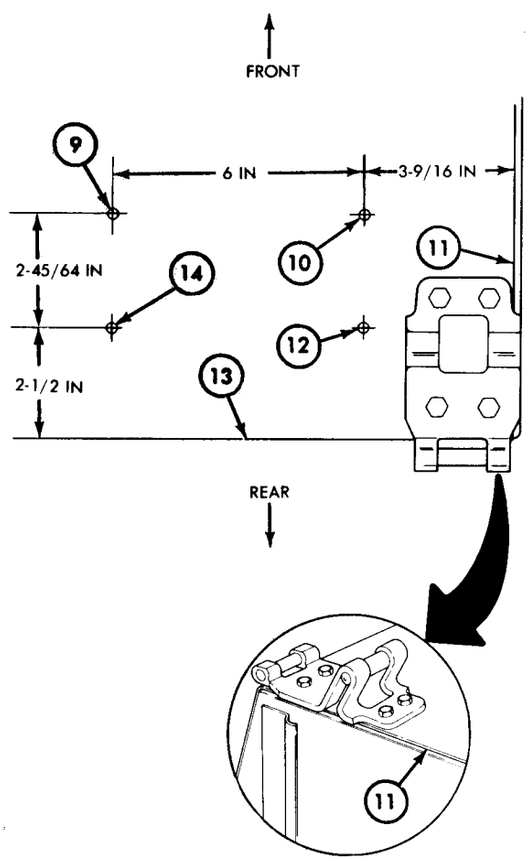

TA 156877

16-24. Heater Kit Installation (Cont'd)

STEP NO.	LOCATION	ITEM	ACTION	REMARKS
9.			Cut intake duct opening in cowl as follows: *a.* Measure 1/2 in. (12.70 mm) right from two left mounting holes (7) and (8), and 1/2 in. (12.70 mm) left from from two right mounting holes (2) and (3). *b.* Scribe two vertical lines (6) and (4). *c.* Measure 2-17/64 in. (63.50 mm) forward from dash panel top edge (5) and scribe horizontal line (9). *d.* Measure 3-25/32 in. (97.24 mm) forward from first horizontal line (9) and scribe second horizontal line (1). *e.* Cut out 5 x 3-25/32 in. (127.00 x 90.49 mm) opening in cowl.	

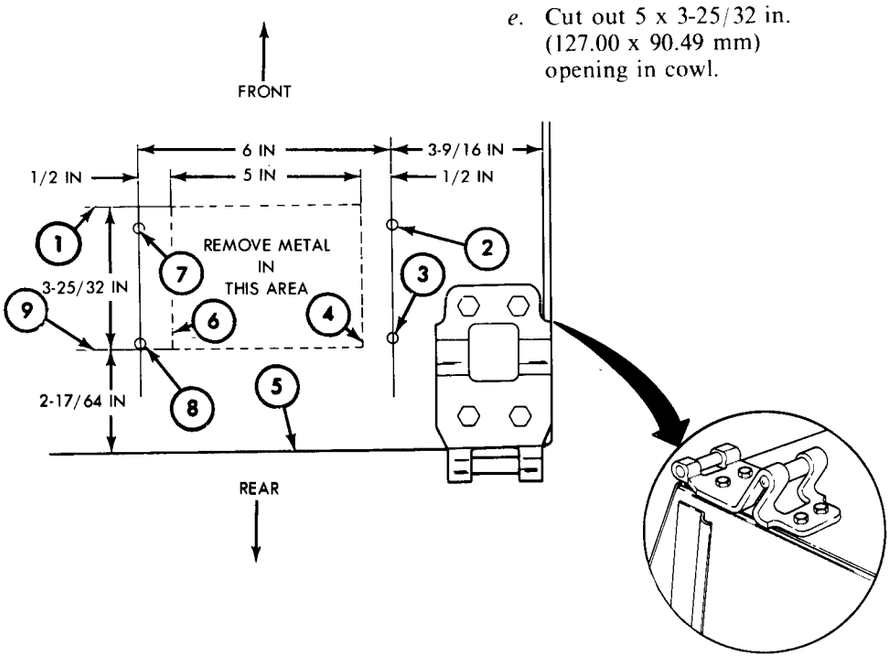

TA 156878

16-24. Heater Kit Installation (Cont'd)

STEP NO.	LOCATION	ITEM	ACTION	REMARKS
10.			Drill one 9/32 in. (7.19 mm) retainer clamp hole as follows: *a.* Measure 16 in. (406.39 mm) back from forward edge of right fender apron (11) and 10-1/2 in. (266.70 mm) left from outboard edge of apron (10). *b.* Drill hole at this location.	

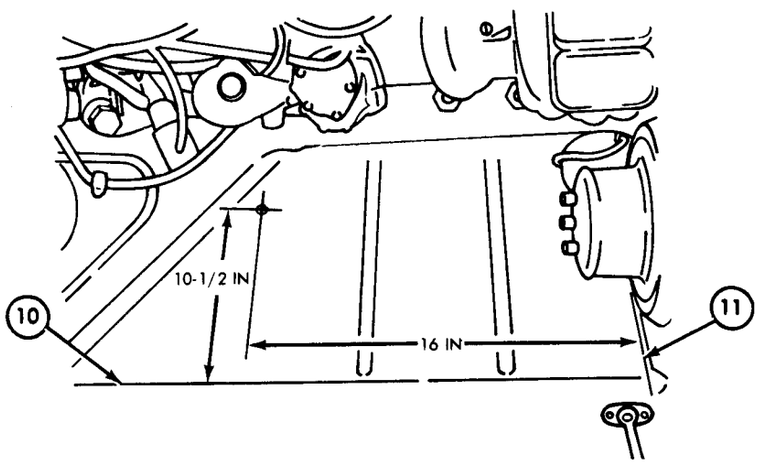

TA 156879

16-24. Heater Kit Installation (Cont'd)

STEP NO.	LOCATION	ITEM	ACTION	REMARKS
11.			Cut two 1-3/8 in. (34.93 mm) hot water heater hose holes as follows: *a.* Measure 6-9/16 in. (166.69 mm) forward from forward edge of transmission cover (1) and 1-7/16 in. (36.51 mm) up from top edge of reinforcement ridge (2). *b.* Cut hole at this location. *c.* Measure 6-1/4 in. (158.75 mm) back from firewall (3) and 2-5/8 in. (66.67 mm) down from lower edge of reinforcement ridge (2). *d.* Cut hole at this location.	

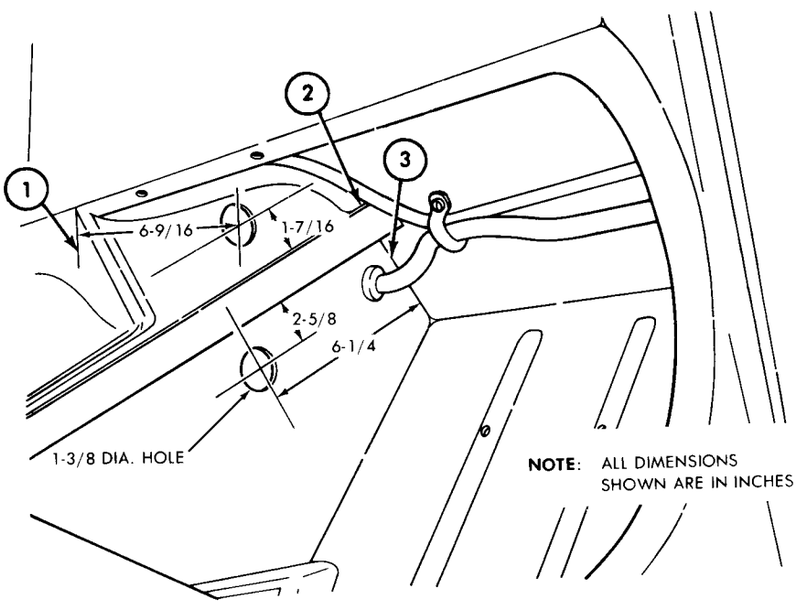

TA 156880

16-24. Heater Kit Installation (Cont'd)

STEP NO.	LOCATION	ITEM	ACTION	REMARKS
12.			Drill one 9/32 in. (7.19 mm) heater support bracket hole as follows:	
			a. Position intake duct (5) behind dash panel (4) to cowl opening (6).	
			b. Measure 11/16 in. (17.46 mm) left from heater motor mounting bracket (7) on dash panel lip (9) and 11/16 in. (17.46 mm) forward from facing edge of dash panel lip (9).	Remove intake duct (5) after measurement has been taken.
			c. Drill hole (8).	

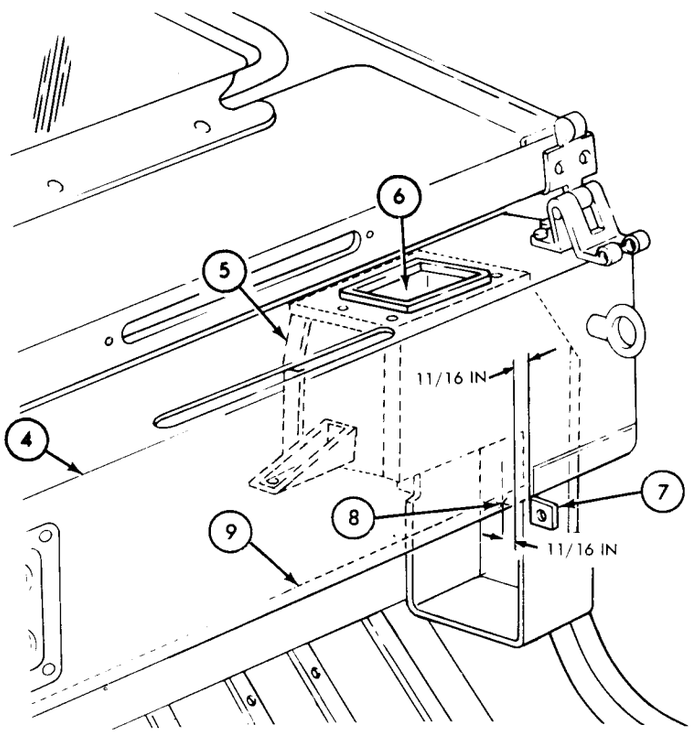

TA 156881

16-24. Heater Kit Installation (Cont'd)

STEP NO.	LOCATION	ITEM	ACTION	REMARKS
13.			Drill two 5/16 in. (10 mm) heater mounting bracket holes as follows: *a.* Measure 9-13/16 in. (248.64 mm) left from side panel (2) on right toeboard (3) and 11-13/16 in. (300.03 mm) up from forward edge of floor panel (4). *b.* Drill hole (1). *c.* Measure 5 in. (127 mm) left from first hole location (1) and drill second hole.	

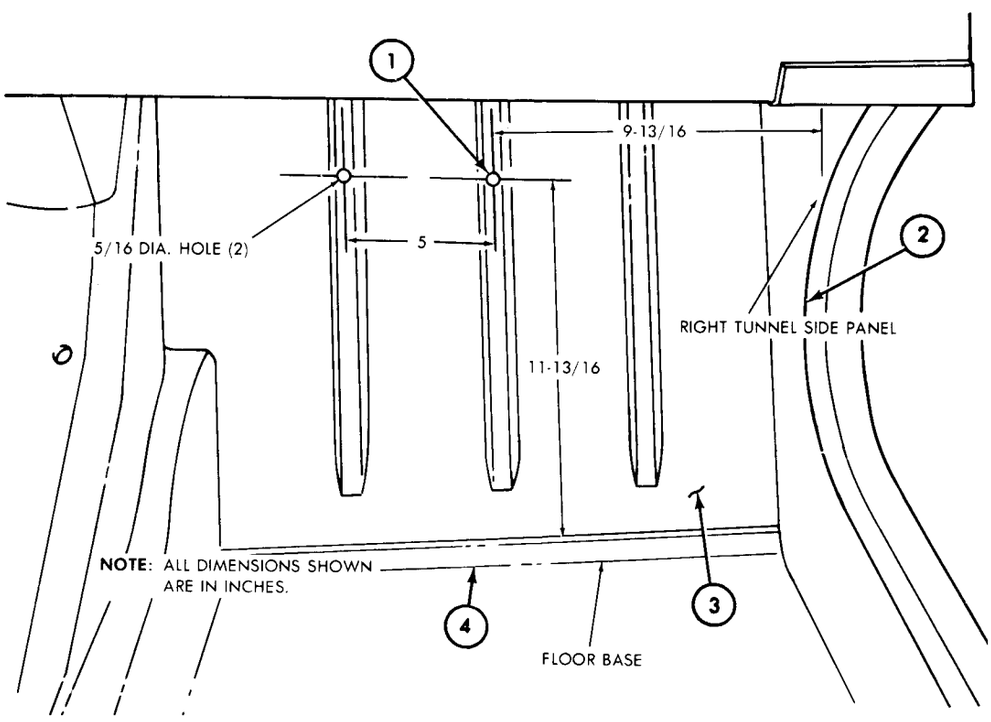

TA 156882

16-24. Heater Kit Installation (Cont'd)

STEP NO.	LOCATION	ITEM	ACTION	REMARKS
14.			Drill two 5/32 in. (3.95 mm) resistor mounting holes as follows: *a.* Measure 5-3/16 in. (131.76 mm) forward from bottom edge of dash panel (6) on left front side panel (5) and 3-13/16 in. (96.84 mm) down. *b.* Drill hole (7) at this location. *c.* Measure 3-7/8 in. (98.42 mm) up from hole (7) and 2-3/4 in. (69.85 mm) forward. *d.* Drill second hole (8) at this location.	

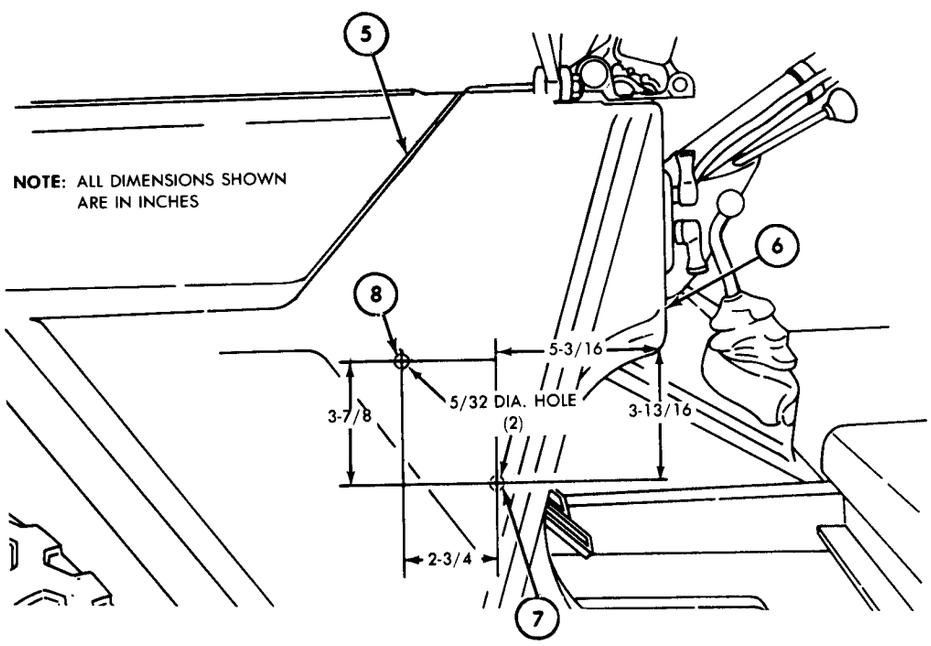

TA 156883

16-24. Heater Kit Installation (Cont'd)

STEP NO.	LOCATION	ITEM	ACTION	REMARKS
15.			Drill two 3/16 in. (4.76 mm) circuit breaker mounting holes as follows: *a.* Measure 3-3/16 inches (80.96 mm) up from upper hole (3) and 7/16 in. (11.11 mm) back. *b.* Drill hole (1) at this location. *c.* Measure 1-1/8 in. (28.56 mm) up from first circuit breaker hole (1) and 7/16 in. (11.11 mm) back. *d.* Drill second hole (2) at this location.	

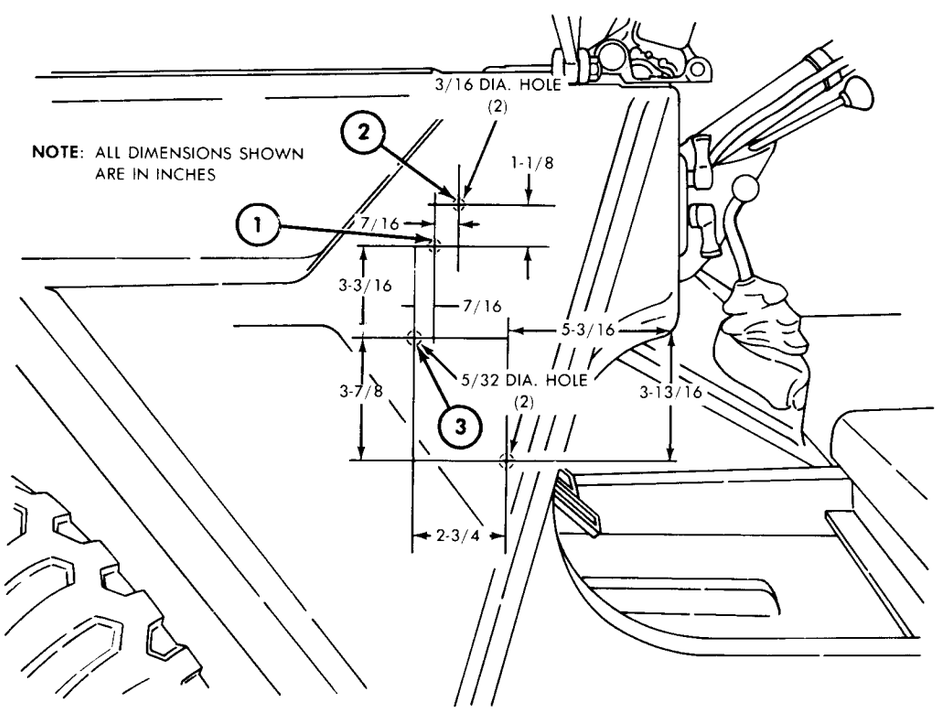

TA 156884

16-24. Heater Kit Installation (Cont'd)

STEP NO.	LOCATION	ITEM	ACTION	REMARKS
16.			Drill one 21/32 in. (16.65 mm) and two 3/16 inch (4.76 mm) heater switch mounting holes as follows: *a.* Measure 2-1/4 in. (57.05 mm) up from center of ignition switch hole (4) and 1-3/4 in. (44.45 mm) left. *b.* Drill 21/32 in. hole at this location. Use heater switch instruction plate (5) for a template to locate position of two 3/16 in. holes. *c.* Scribe two hole locations and drill holes.	

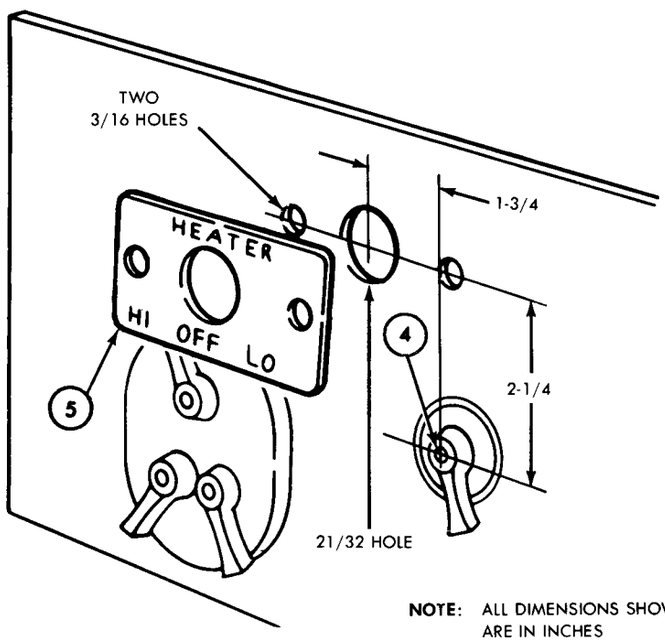

NOTE: ALL DIMENSIONS SHOWN ARE IN INCHES

TA 156885

16-24. Heater Kit Installation (Cont'd)

STEP NO.	LOCATION	ITEM	ACTION	REMARKS
17.			Drill four 3/32 in. (2.38 mm) instruction plate holes as follows: *a.* Measure 2-1/2 in. (63.50 mm) right from heater switch center hole (3) and 6-15/16 in. (176.21 mm) up from bottom edge of windshield panel (1). *b.* Use instruction plate (2) for a template and aline upper right hole at this location. *c.* Scribe four hole locations and drill holes.	

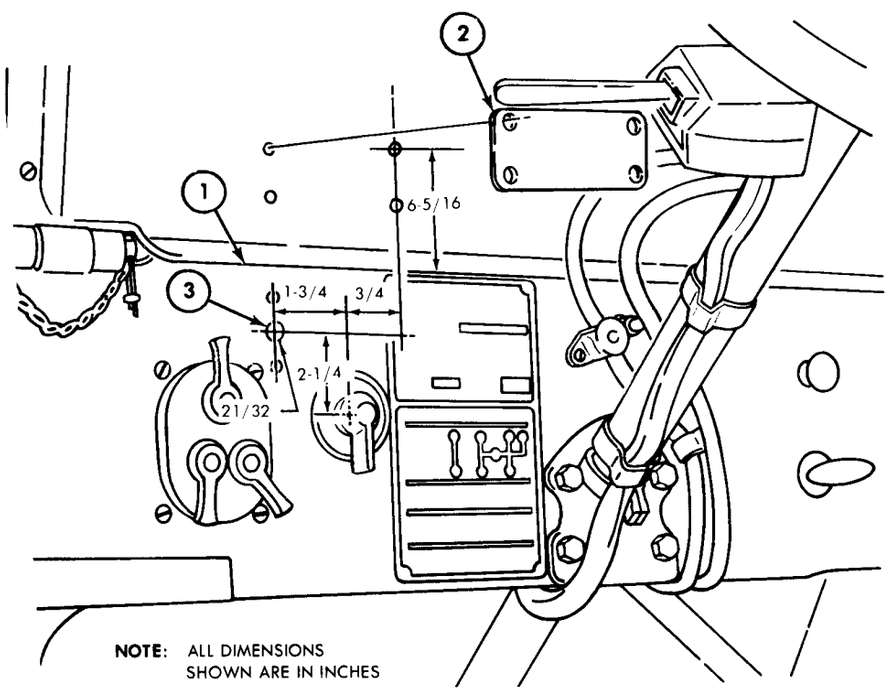

TA 156886

16-24. Heater Kit Installation (Cont'd)

STEP NO.	LOCATION	ITEM	ACTION	REMARKS
18.			Cut 2 in. (50.80 mm) slave receptacle hole as follows: *a.* Measure 4 in. (101.6 mm) left from right outboard edge of cowl (4) and 1-1/2 in. (38.1 mm) up on inclined surface of cowl (5). *b.* Cut hole at this location.	

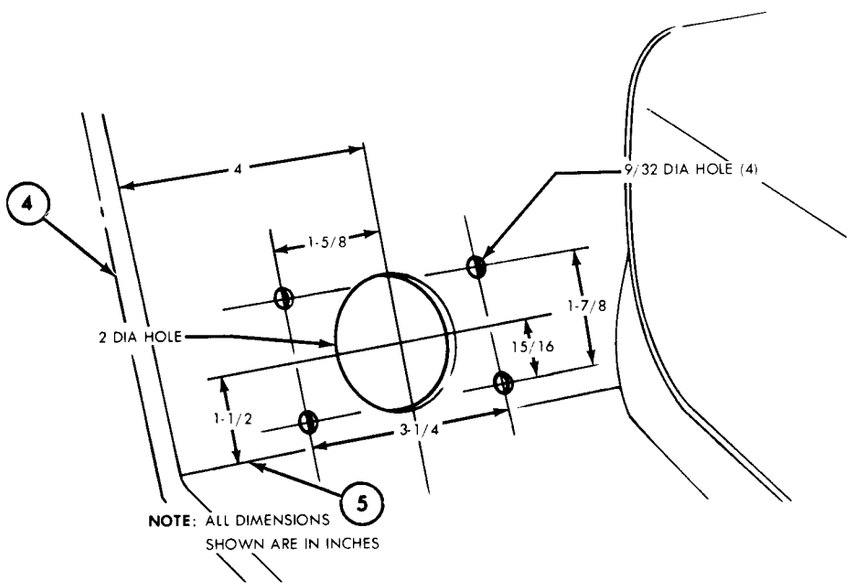

TA 156887

16-24. Heater Kit Installation (Cont'd)

STEP NO.	LOCATION	ITEM	ACTION	REMARKS
19.			Drill four 9/32 in. (7.14 mm) slave receptacle mounting plate holes as follows: *a.* Measure 1-5/8 in. (41.28 mm) left and 1-5/8 in (41.28 mm) right from center of receptacle hole (1). *b.* Scribe vertical line (2). *c.* Measure 15/16 in. (23.81 mm) up and 15/16 in. (23.81 mm) down from line (2) on both sides of receptacle hole (1). *d.* Scribe four hole locations and drill holes.	

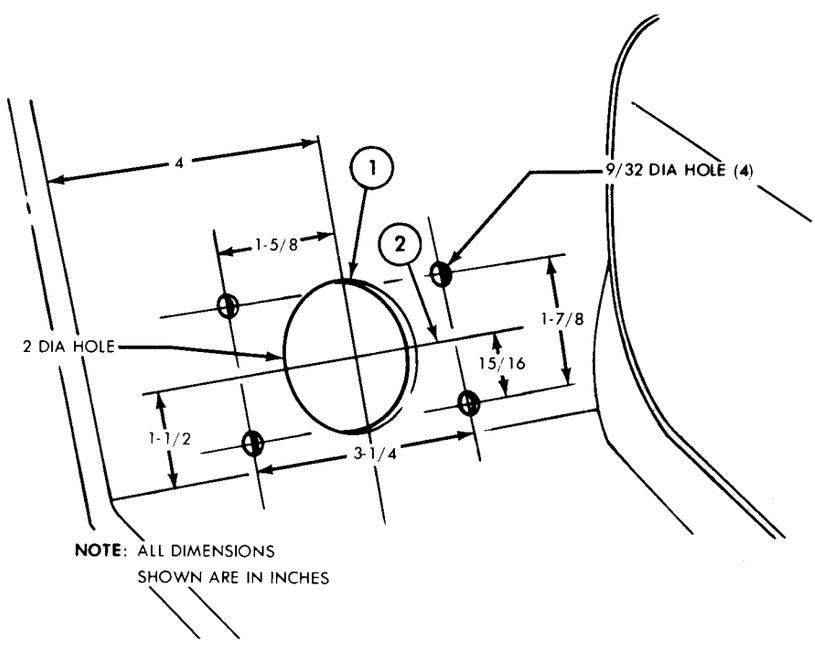

TA 156888

16-24. Heater Kit Installation (Cont'd)

STEP NO.	LOCATION	ITEM	ACTION	REMARKS
20.			Drill 7/8 in. (22.23 mm) slave receptacle hole in seat riser (4) right side as follows: *a.* Measure 1-5/8 in. (41.28 mm) left from right side panel (5) and 1-9/16 in. (39.69 mm) up from bottom of battery compartment (3). *b.* Scribe hole location and drill hole.	

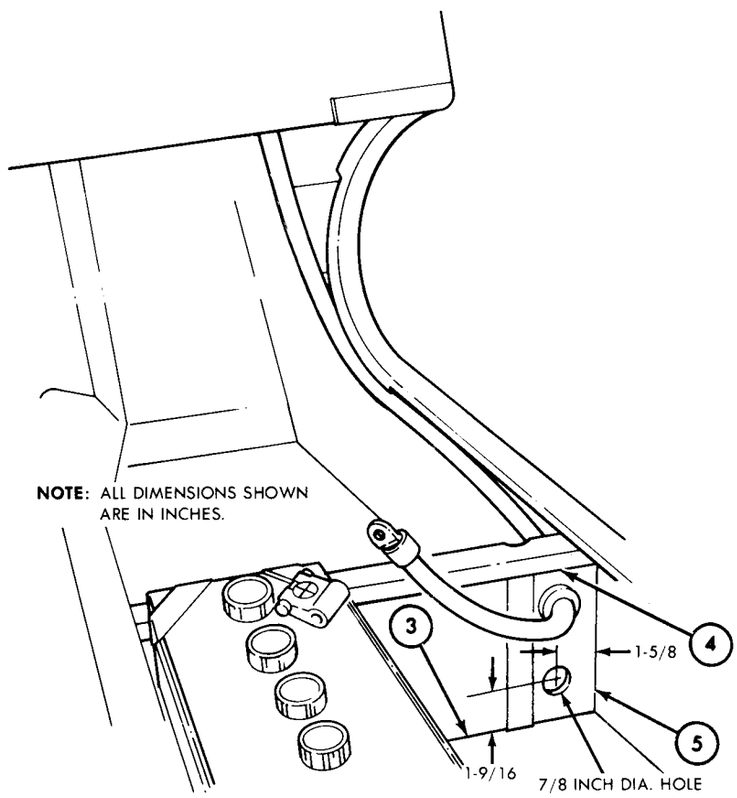

TA 156889

16-24. Heater Kit Installation (Cont'd)

STEP NO.	LOCATION	ITEM	ACTION	REMARKS
c. ELECTRICAL WIRING ASSEMBLY INSTALLATION				
21.		Circuit breaker (3)	Secure to left body side panel (4) with two screws (5), lock-washers (2), and nuts (1).	

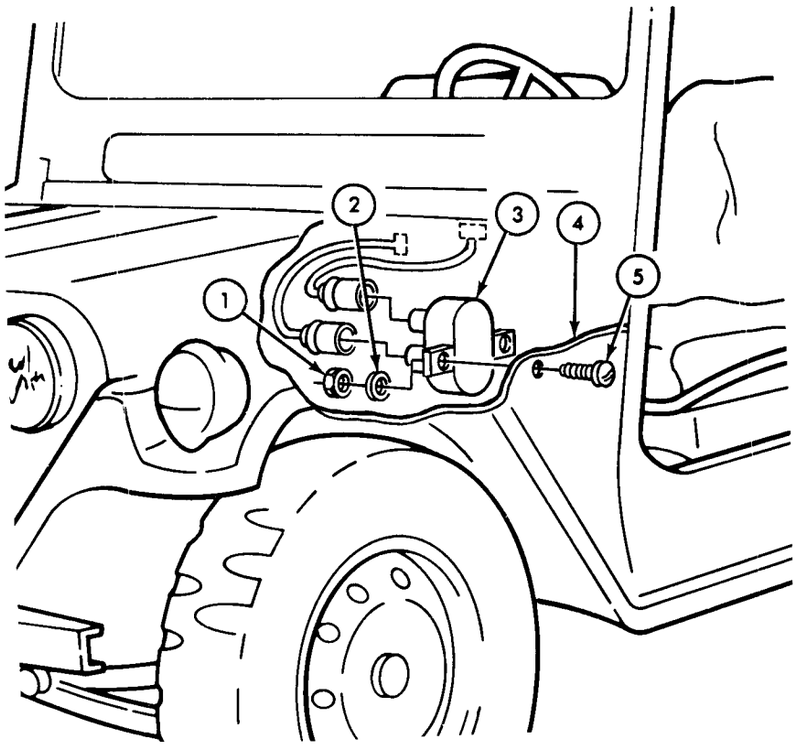

TA 156890

16-24. Heater Kit Installation (Cont'd)

STEP NO.	LOCATION	ITEM	ACTION	REMARKS
22.		Resistor (8)	Secure to left body side panel (4) with two screws (9), lock-washers (7), and nuts (6).	

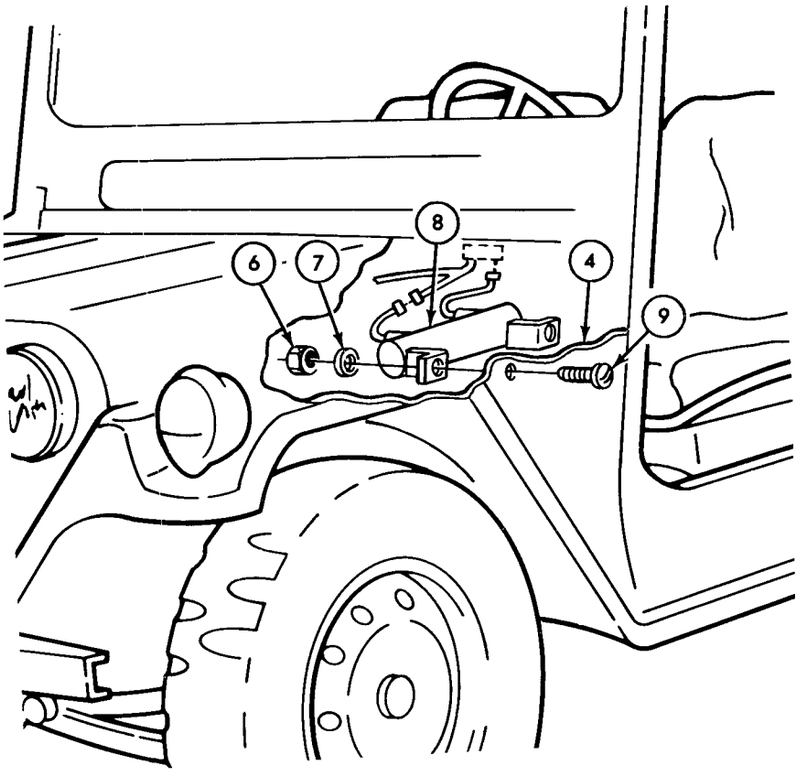

TA 156891

16-24. Heater Kit Installation (Cont'd)

STEP NO.	LOCATION	ITEM	ACTION	REMARKS
23.		Resistor cable connector (8)	Connect to left terminal (17) of heater switch (2).	
24.		Resistor cable (10) to blower motor cable connector (11)	Secure halves together.	
25.		Circuit 12 connector (14)	*a.* Remove from ignition switch (16). *b.* Install in double opening of connector adapter (20).	
26.		Ignition switch cable (15)	Connect one end to ignition switch (16) and one end to double opening of connector adapter (20).	
27.		Circuit breaker to connector adapter cable (7)	*a.* Connect one end to single opening of connector adapter (20). *b.* Connect one end to circuit breaker (6).	
28.		Circuit breaker to heater switch cable (5)	*a.* Connect one end to center terminal (18) of heater switch (2). *b.* Connect one end to circuit breaker (6).	
29.		Blower motor cable (9)	*a.* Connect to right terminal (19) of heater switch (2). *b.* Route cable (12) along lower lip of dash panel (13) toward right side.	
30.		Heater switch (2)	Place through dash panel opening from behind panel (1) and secure with instruction plate (3) and two screws (4).	Make sure HI-LO position on switch (2) matches instruction plate (3).

16-24. Heater Kit Installation (Cont'd)

STEP NO.	LOCATION	ITEM	ACTION	REMARKS

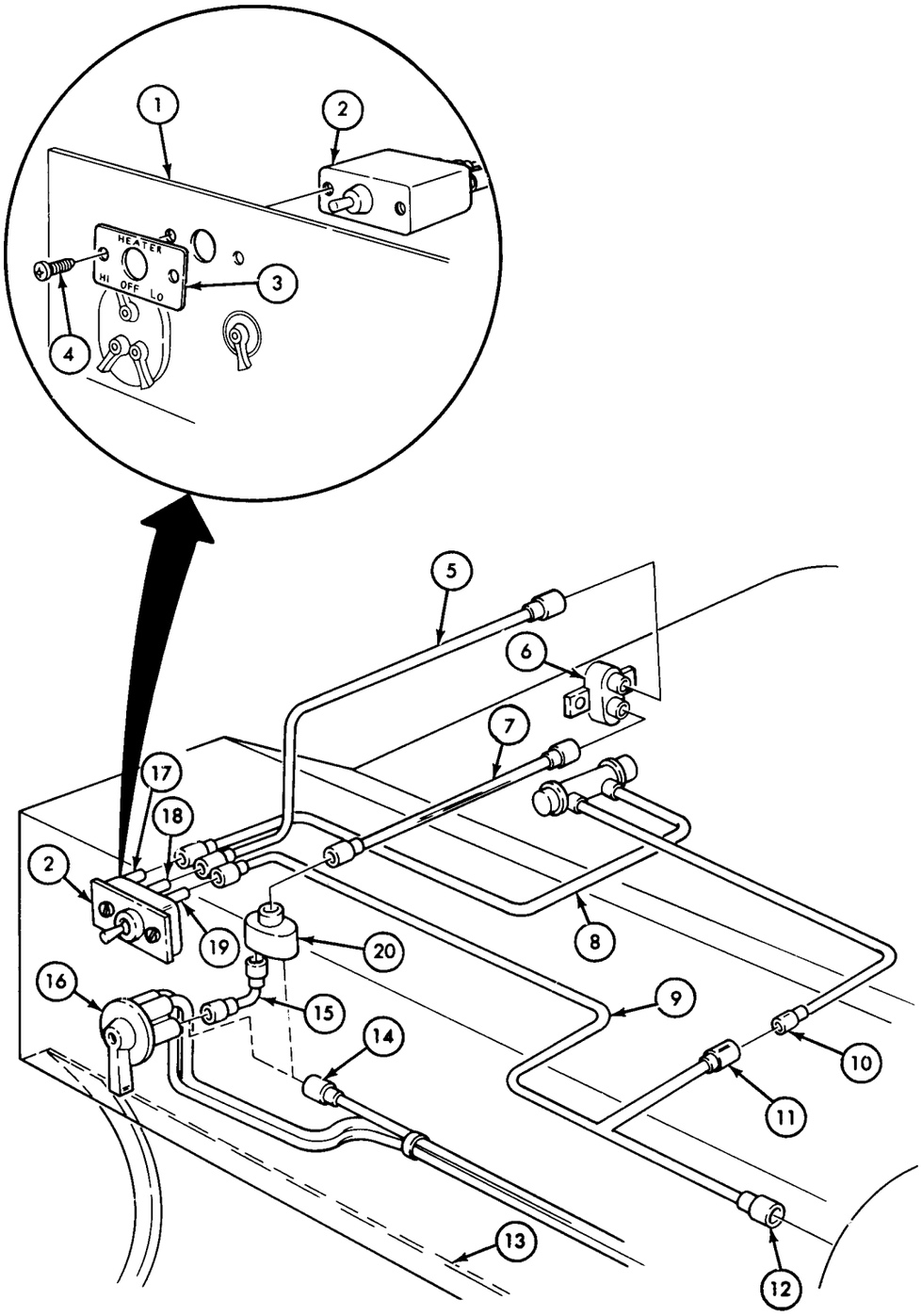

TA 156892

16-24. Heater Kit Installation (Cont'd)

STEP NO.	LOCATION	ITEM	ACTION	REMARKS
		d. SLAVE CABLE INSTALLATION		
31.	The slave cable assembly installation procedure is found in paragraph 16-11.			
		e. DEFROSTER NOZZLES AND HOSES INSTALLATION		
		NOTE		
		Access for installation of ducting hose (4) and left defroster hose (15) is through instrument cluster opening in dash panel (6). Ratchet wrench is recommended for installation of hose and duct clamps.		
32.		Two ducting hose clamps (2) and (26)	Install on ends of ducting hose (4).	
33.		Ducting hose (4)	Position behind dash panel (6).	
34.		Two right defroster hose clamps (8) and (11)	Install on ends of right defroster hose (10).	
35.		Defroster hose (10) and clamp (8)	Place on right defroster nozzle (7), and tighten clamp screw (9).	
36.		Right defroster nozzle (7)	Secure to top of dash panel (6) with two screws (5).	
37.		Two left defroster hose clamps (16) and (14)	Install on ends of defroster hose (15).	
38.		Defroster hose (15) and clamp (16)	Place on left defroster nozzle (23) and tighten clamp screw (17).	
39.		Left defroster nozzle (23)	Secure to top of dash panel (6) with two screws (1).	
40.		Defroster diverter (28)	*a.* Place on steering column (20) and position two clamps (19) and (27) over mounting legs (21) and (22).	Make sure shorter mounting leg (22) is facing rear of vehicle and longer mounting leg (21) is facing toeboard (12).
			b. Tighten clamp screws (18) to secure.	

16-24. Heater Kit Installation (Cont'd)

STEP NO.	LOCATION	ITEM	ACTION	REMARKS
41.		Left defroster hose (15) and clamp (14)	Place on diverter flange (24) and tighten clamp screw (13).	
42.		Ducting hose (4) and clamp (2)	Place on diverter flange (25) and tighten clamp screw (3).	

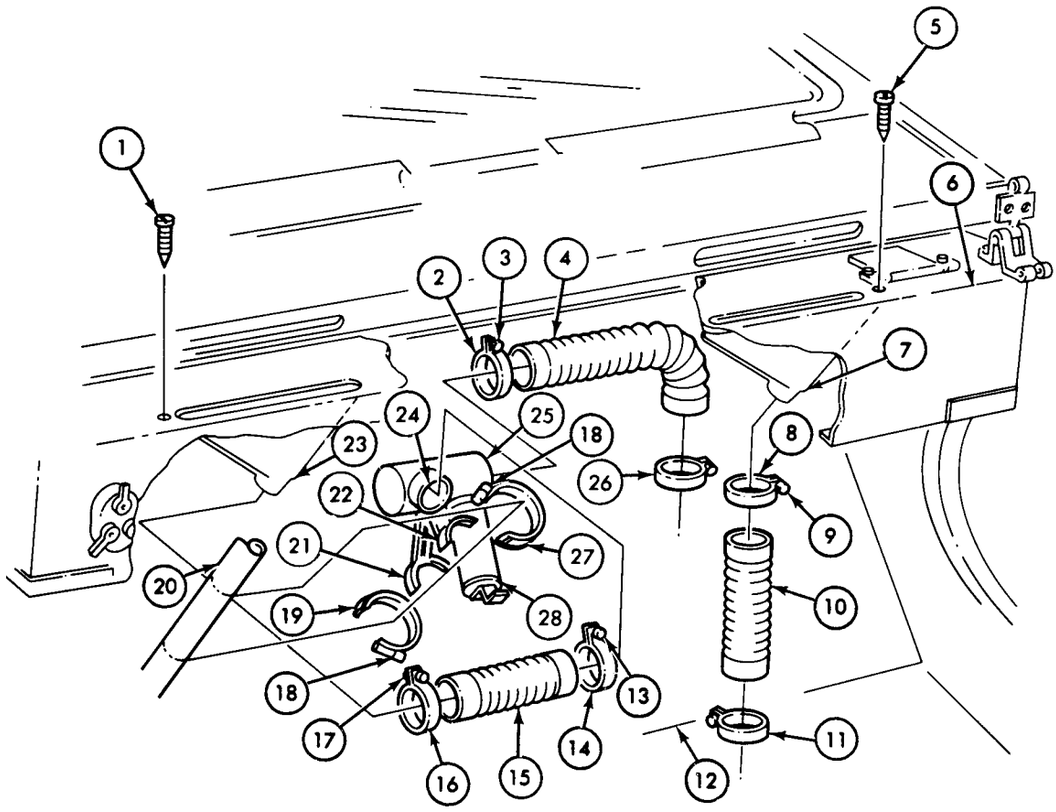

TA 156893

16-24. Heater Kit Installation (Cont'd)

STEP NO.	LOCATION	ITEM	ACTION	REMARKS
43.		Speedometer shaft assembly (3)	Secure to speedometer (1) and tighten shaft nut (2).	
44.		Instrument cluster (6)	Secure to dash panel (7) with four lock-washers (5) and screws (4).	

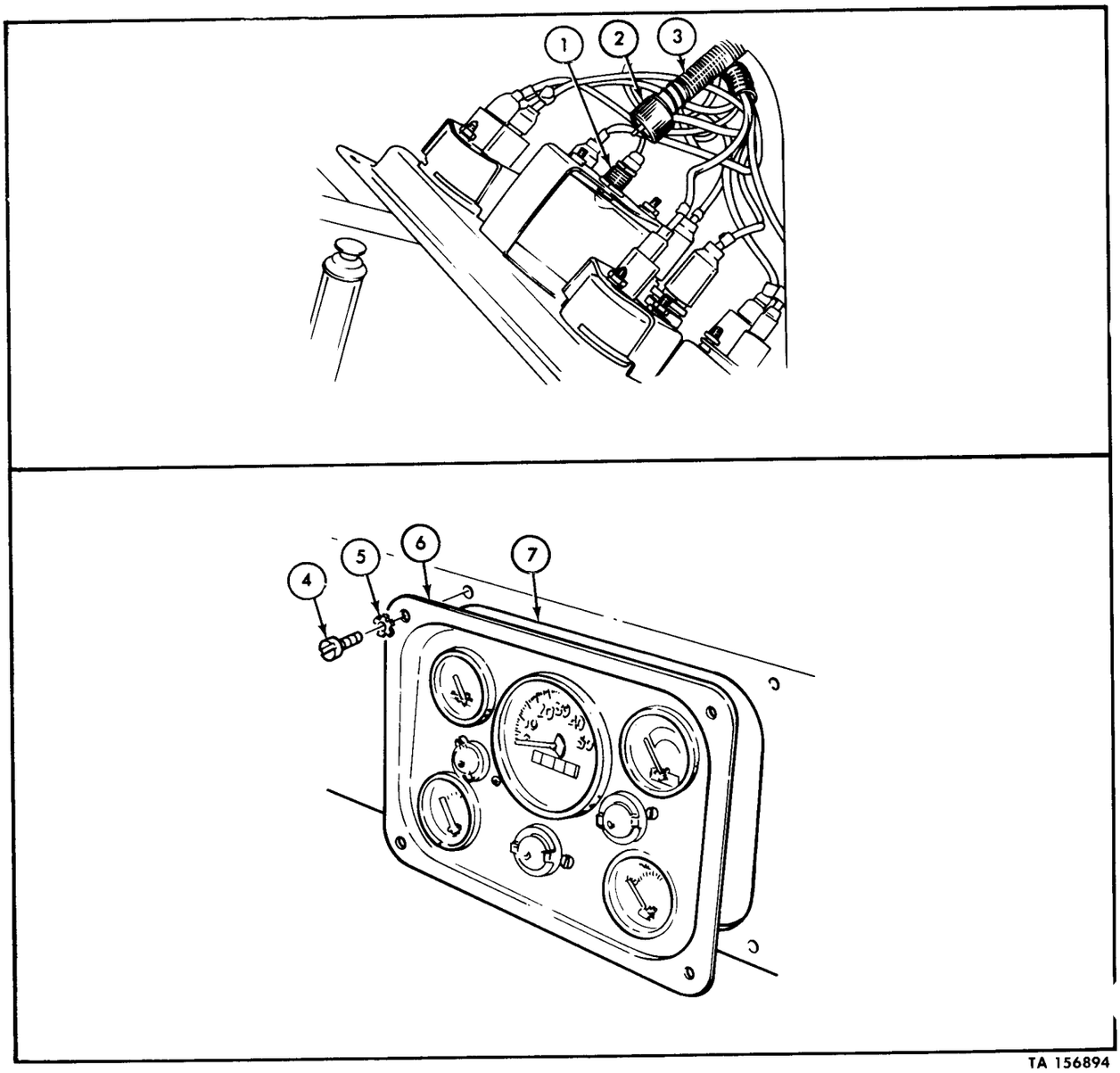

TA 156894

16-24. Heater Kit Installation (Cont'd)

STEP NO.	LOCATION	ITEM	ACTION	REMARKS
f. HOT WATER HOSES AND SHUTOFF COCKS INSTALLATION				
45.		Elbow pipe (14)	Screw into water pump (13).	
46.		Pipe coupling (11)	Screw into elbow pipe (14).	
47.		Shutoff cock (10)	Screw into pipe coupling (11).	
48.		Pipe coupling (15)	Screw into cylinder head (12).	
49.		Shutoff cock (16)	Screw into pipe coupling (15).	
50.		Clamp (9)	Install on end of 48 in. (1219.2 mm) hose (8).	
51.		48 in. (1219.2 mm) hose (8) and clamp (9)	Connect to water pump shutoff cock (10) and tighten clamp (9).	
52.		Clamp (17)	Install on end of 44 in. (1117.6 mm) hose (18).	
53.		44 in. (1117.6 mm) hose (18) and clamp (17)	Connect to cylinder head shutoff cock (16) and tighten clamp (17).	

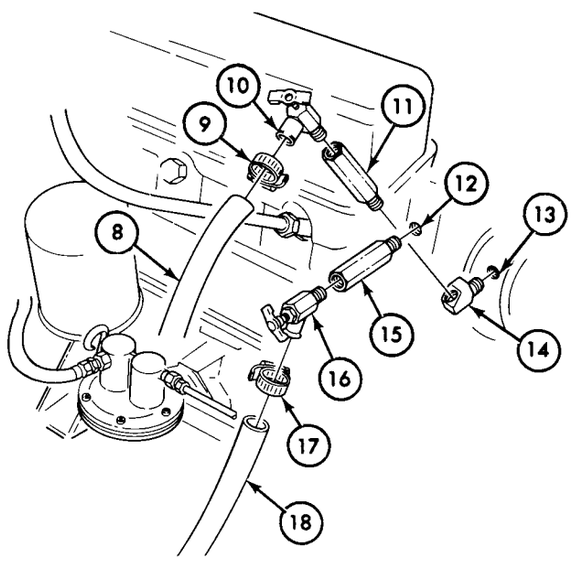

TA 156895

16-24. Heater Kit Installation (Cont'd)

STEP NO.	LOCATION	ITEM	ACTION	REMARKS
54.		Two grommets (8)	Install in holes in tunnel panel (7).	
55.		Two hoses (1)	Route from engine compartment through two grommets (8) in tunnel panel (7) and into crew compartment (9).	
56.		Retainer clamp (2)	Install on two hoses (1) and secure to right front fender apron (10) with screw (3), lockwasher (4), and nut (5).	
57.		Hose support clamp (6)	Secure to two hoses (1).	

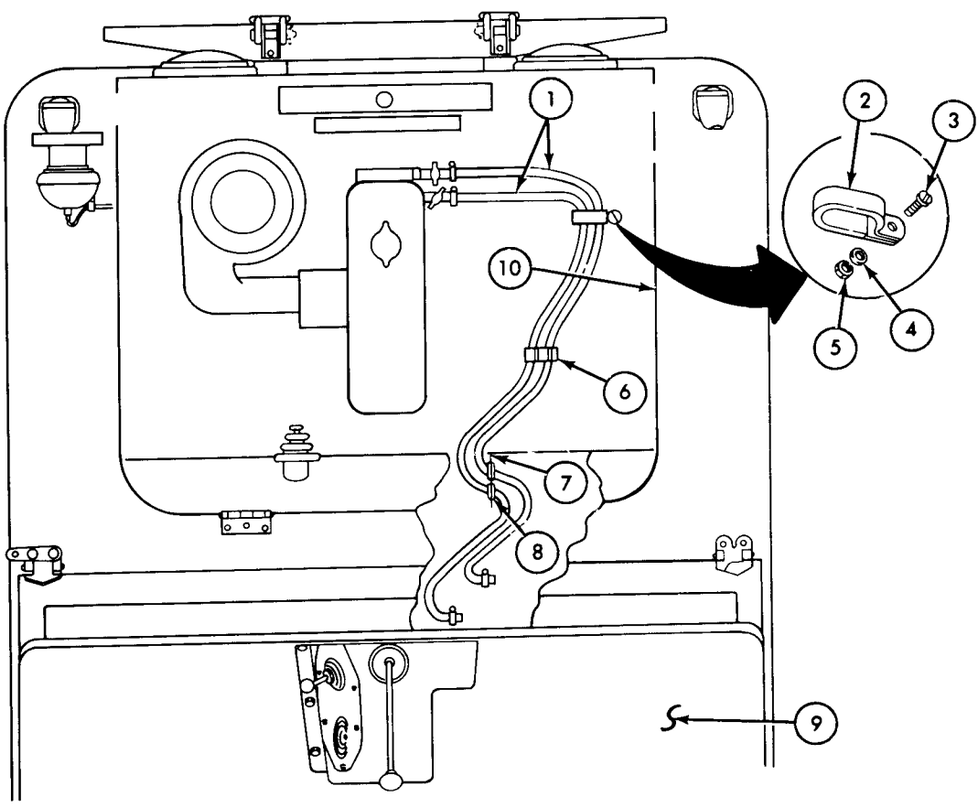

TA 156896

16-24. Heater Kit Installation (Cont'd)

STEP NO.	LOCATION	ITEM	ACTION	REMARKS
g. HEATER, DIVERTER, AND INTAKE DUCT ASSEMBLY AND INSTALLATION				
58.		Intake duct (13)	*a.* Place on heater assembly (25). *b.* Secure duct bracket (15) to heater bracket (21) with bolt (22), heater support bracket (20), lockwasher (16), and nut (17). *c.* Secure duct support bracket (19) to upper heater bracket (23) with capscrew (24), lockwasher (11), and nut (12).	
59.		Heater assembly (25) and intake duct (13)	Raise beneath dash panel (14), and support from floor (18).	

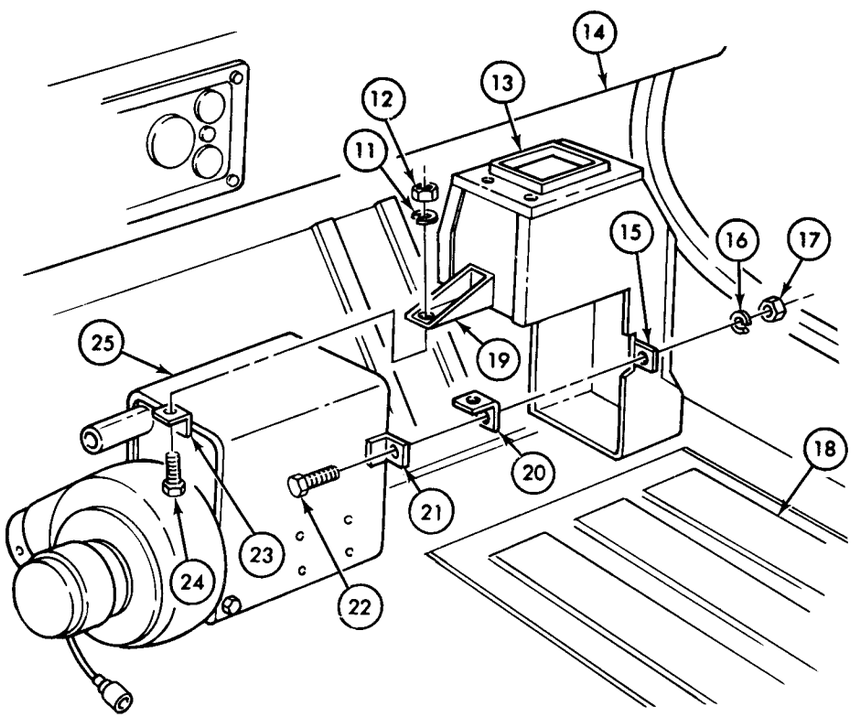

TA 156897

16-24. Heater Kit Installation (Cont'd)

STEP NO.	LOCATION	ITEM	ACTION	REMARKS
60.		Intake duct (5), and cover (1)	*a.* Apply sealer on intake duct (5) around opening and aline with holes in cowl (6). *b.* Place cover (1) on opening in cowl (6) and secure hinge to cowl (6) and intake duct (5) with two flat washers (4), lockwashers (3), and capscrews (2. *c.* Secure at remaining holes with two flat washers (4), lock-washers (3), and capscrews (2).	
61.		Two clamps (16)	Install on ends of two hot water hoses (17).	
62.		Two hot water hoses (17) and clamps (16)	Connect to two heater core tubes (15) and tighten clamp screws (18).	
63.		Plate (12)	Secure to heater core jacket (14) with four screws (13).	
64.		Diverter box flange (20)	Attach to heater blower (27) with two lockwashers (21) and screws (22).	
65.		Diverter box retainer (19)	Secure to heater blower (27) with lockwasher (25) and screw (26).	
66.		Ducting hose (30), and clamp (29)	Connect to diverter box flange (23) and tighten clamp screw (28).	
67.		Right defroster hose (33) and clamp (31)	Connect to diverter box flange (24) and tighten clamp screw (32).	
68.		Heater support bracket (10)	Secure to dash panel (7) with screw (11), lock-washer (9), and nut (8).	

16-24. Heater Kit Installation (Cont'd)

STEP NO.	LOCATION	ITEM	ACTION	REMARKS

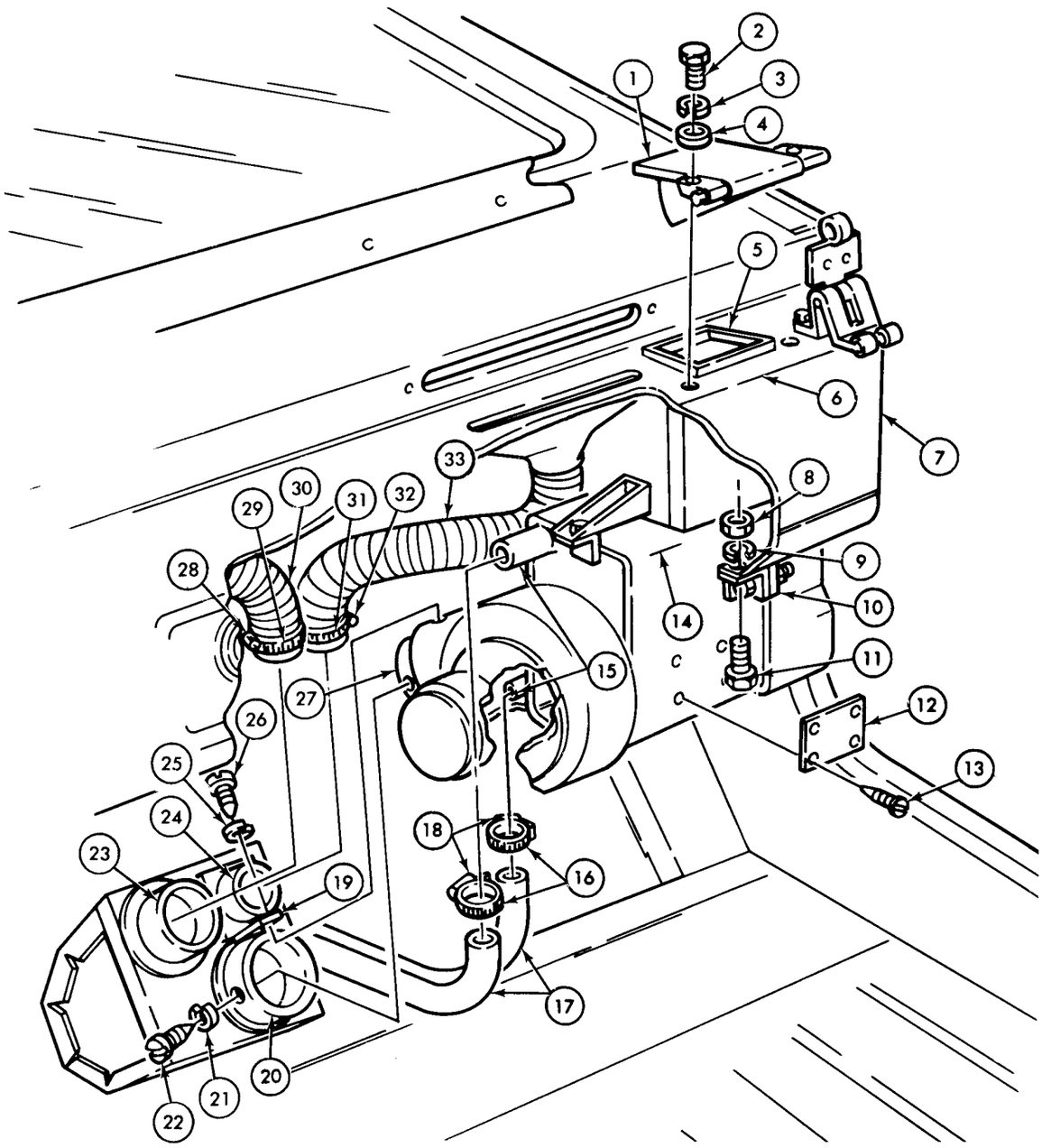

TA 156898

16-24. Heater Kit Installation (Cont'd)

STEP NO.	LOCATION	ITEM	ACTION	REMARKS
69.		Heater mounting bracket (10)	Secure to floor panel (12) with two flat washers (14), lockwashers (13), and capscrews (11).	
70.		Heater assembly bracket (1)	Secure to mounting bracket (10) with bolt (9), lockwasher (2), and nut (3).	
71.		Heater assembly (6)	Secure to mounting bracket (10) with lock-washer (7) and bolt (8).	
72.		Blower motor cable connector (4)	Connect to blower motor electrical lead (5).	

16-24. Heater Kit Installation (Cont'd)

STEP NO.	LOCATION	ITEM	ACTION	REMARKS

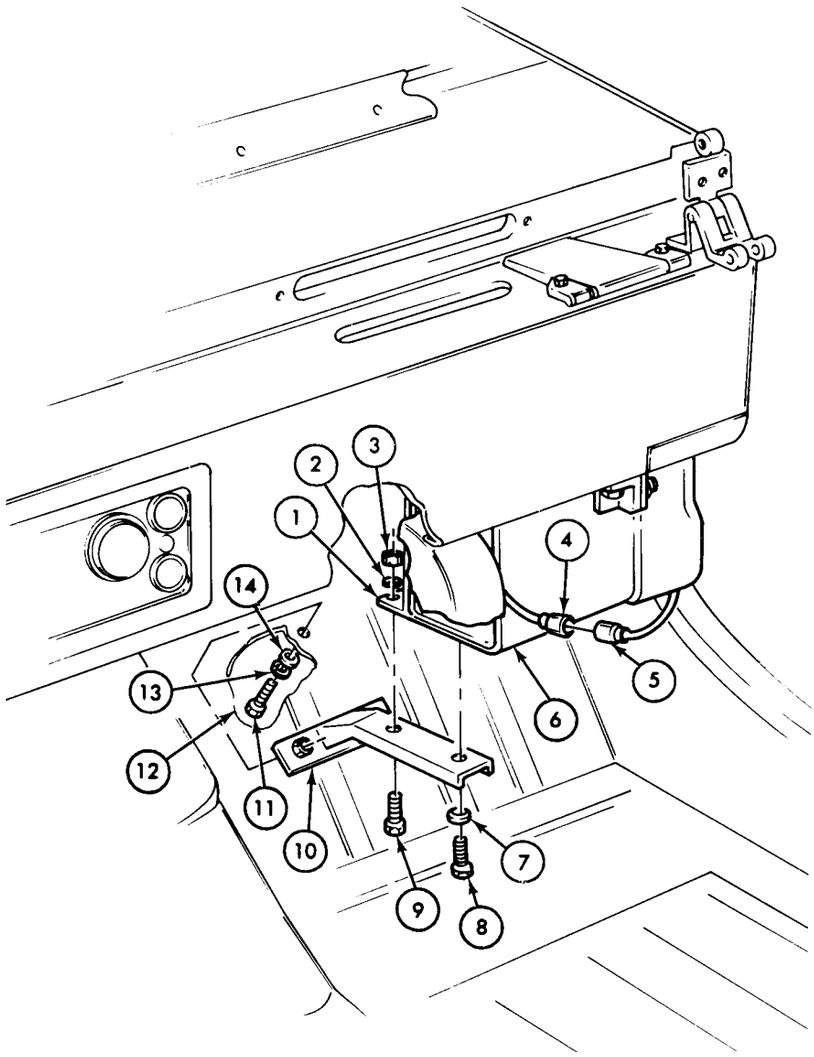

END OF TASK!

FOLLOW-ON TASKS:
- Fill cooling system (TM 9-2320-218-20-1).
- Install batteries (TM 9-2320-218-20-1).
- Install front seats (TM 9-2320-218-20-1).
- Check operation of heater kit (para 16-7).

TA 156899

16-25. Operating Test of Heater

a. Operation of Heater. For operation of heater controls, see TM 9-2320-218-10.

b. Operation of Blower Motor. Open cowl ventilator. Check operation of blower motor at high and low speeds for flow of air at defrosters and heat outlets.

Section III. HARDTOP KIT ASSEMBLY AND INSTALLATION

16-26. General

This section provides assembly and installation procedures assigned to the direct and general support levels for hardtop kits. To find a specific assembly or installation procedure, see the task summary.

16-27. Service Upon Receipt of Material

See TM 9-2320-218-20-1-2.

16-28. Preventive Maintenance

See TM 9-2320-218-10.

16-29. Troubleshooting

See TM 9-2320-218-20-1-2.

16-30. Hardtop Kit Assembly and Installation Task Summary

16-31. Hardtop Kit Assembly and Installation

This task covers:

a. Vehicle Preparation
b. Roof, Rear, and Side Panels Assembly
c. Door and Pillar Assembly
d. Door Handle, Latch, and Related Parts Assembly
e. Drilling Instructions
f. Hardtop Kit Installation

INITIAL SETUP:

Applicable Models
M151A2

Test Equipment
None

Special Tools
Drill bits: 7/32, 9/32, 1/4, 3/8 in.
Three C-clamps

Materials/Parts
Adhesive (NSN 8040-00-262-9031)
Caulking compound
(NSN 8030-00-682-6745)
Drycleaning solvent

Personnel Required
One mechanic
One assistant

Manual References
TM 9-2320-218-10
TM 9-2320-218-20-1-2
TM 9-2320-218-34P

Equipment Condition Reference	Condition Description
TM 9-2320-218-10	Parking brake set.
TM 9-2320-218-10	Soft top, doors, and curtains removed.
TM 9-2320-218-20-1-2	Roof bows and bracket assemblies removed.

Special Environmental Conditions
Well-ventilated work area.

General Safety Instructions
- Keep fire extinguisher nearby when using drycleaning solvent.
- Eye protection will be worn during all drilling operations.

STEP NO.	LOCATION	ITEM	ACTION	REMARKS
	a. VEHICLE PREPARATION			
1.	Two windshield horizontal top rod brackets (1) to windshield panel (2)	Four screw-assembled lockwashers (3)	Remove.	
2.		Two top rod brackets (1)	Remove from windshield panel (2).	
3.	Footman loop (5) to rear body panel (6)	Two screws (4)	Remove.	
4.		Footman loop (5)	Remove from rear body panel (6).	

16-31. Hardtop Kit Assembly and Installation (Cont'd)

STEP NO.	LOCATION	ITEM	ACTION	REMARKS
5.	Safety strap eyebolt (7) to right side of dash panel (10)	Nut (8) and lockwasher (9)	Remove.	
6.		Safety strap eyebolt (7)	Remove from dash panel (10).	

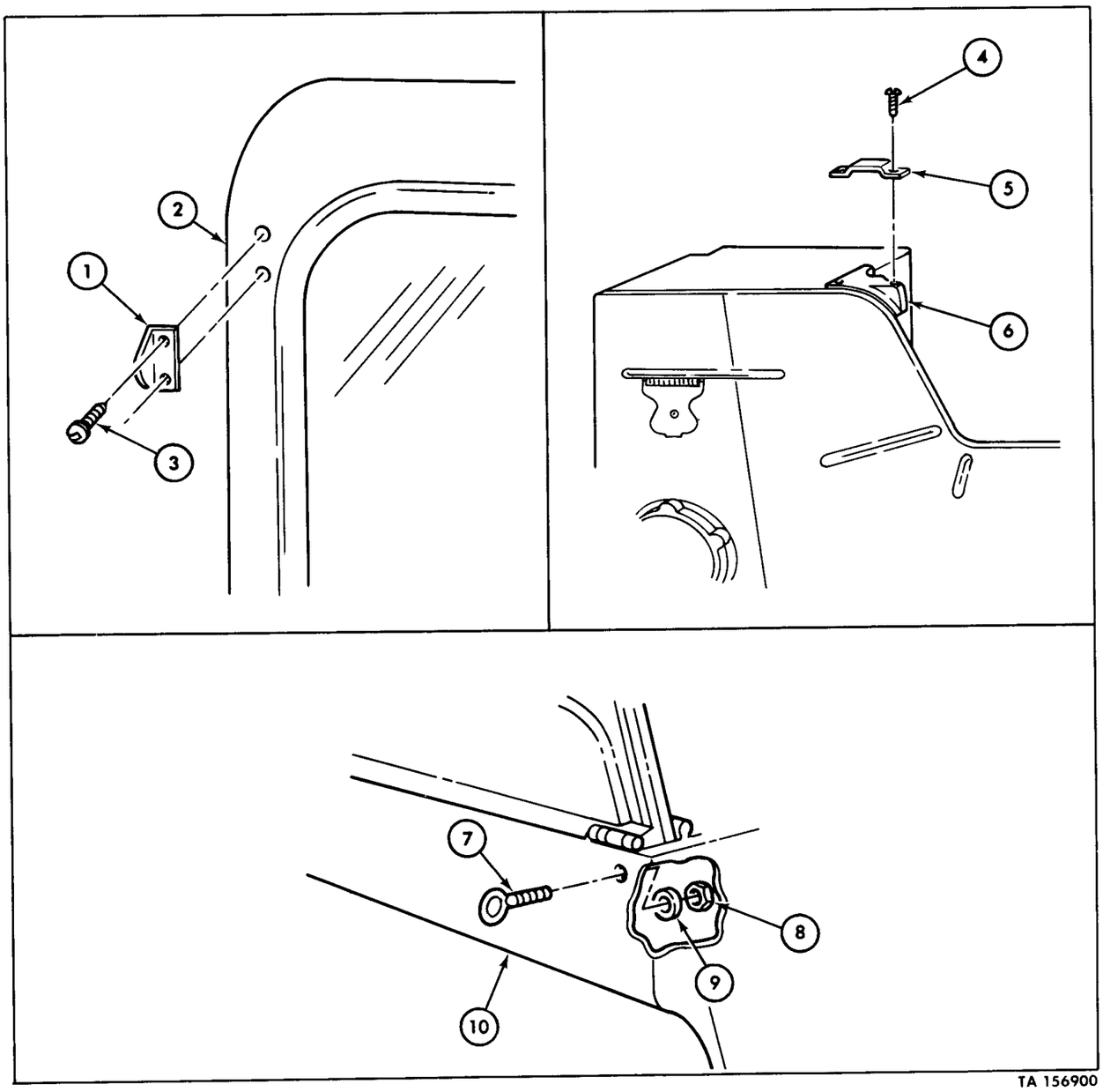

TA 156900

16-31. Hardtop Kit Assembly and Installation (Cont'd)

STEP NO.	LOCATION	ITEM	ACTION	REMARKS
	b. ROOF, REAR, AND SIDE PANELS ASSEMBLY			
		NOTE • When assembling panels, select a clean, level area. Do not allow panels to come in contact with floor and become soiled or damaged. An assistant will position panels during assembly procedures. • The right and left side panels are installed identically.		
7.		Adhesive	*a.* Apply light coat to side panel weatherstrip contact surfaces (3). *b.* Apply light coat to mating surfaces of upper (2) and lower (4) weatherstrips. *c.* Allow to dry until tacky.	
8.		Upper (2) and lower (4) weatherstrip seals	*a.* Place on side panel (1).	Work from one end using care not to stretch seals.
		WARNING Drycleaning solvent is flammable and will not be used near an open flame. A fire extinguisher will be kept nearby when solvent is used. Use only in well-ventilated places. Failure to do this may result in injury to personnel and/or damage to equipment.		
			b. Remove excess adhesive with dry-cleaning solvent. *c.* Punch holes in weatherstrip (2) and (4), after cementing, to match holes in panel (1).	

16-31. Hardtop Kit Assembly and Installation (Cont'd)

STEP NO.	LOCATION	ITEM	ACTION	REMARKS

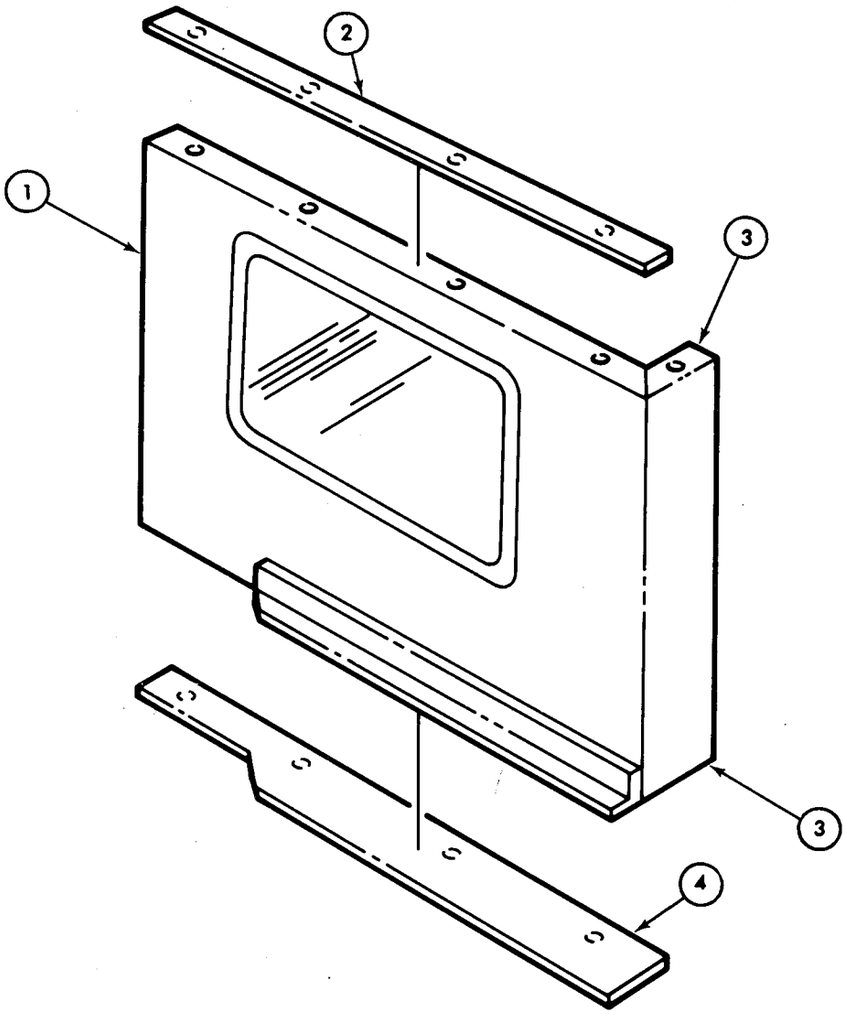

TA 156901

16-31. Hardtop Kit Assembly and Installation (Cont'd)

STEP NO.	LOCATION	ITEM	ACTION	REMARKS
		NOTE		
		Roof panel to windshield seal (1), roof panel to rear panel seal (2), two rear panel to side panel seals (3), and five rear panel to body seals (4), are installed identically. Steps 9 and 10 apply to all seals.		
9.		Adhesive	*a.* Apply light coat to panel weatherstrip contact surface.	
			b. Apply light coat to weatherstrip mating surface.	
			c. Allow to dry until tacky.	
10.		Weatherstrip seal	Apply to panel.	Work from one end using care not to stretch seal.
		WARNING		
		Drycleaning solvent is flammable and will not be used near an open flame. A fire extinguisher will be kept nearby when solvent is used. Use only in well-ventilated places. Failure to do this may result in injury to personnel and/or damage to equipment.		
			d. Punch holes in weatherstrip, after cementing, to match holes in panel.	

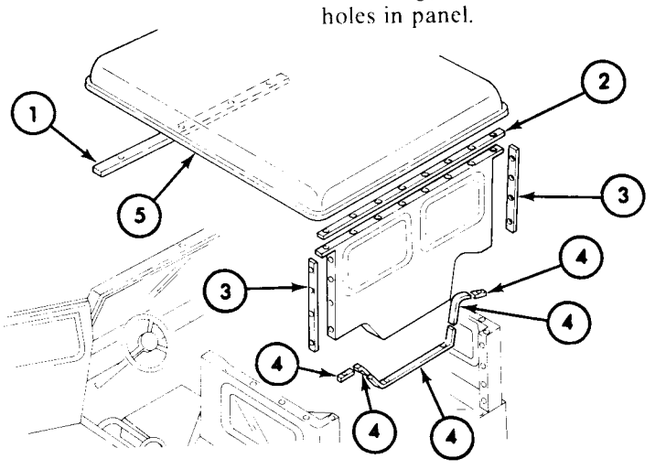

TA 156902

16-31. Hardtop Kit Assembly and Installation (Cont'd)

STEP NO.	LOCATION	ITEM	ACTION	REMARKS
		NOTE • Left and right side panels (6) are installed on rear panel (7) the same way. • Assistant will be required for steps 11 through 37.		
11.		Two side panels (6)	*a.* Position to rear panel (7) and aline holes. *b.* Secure with eight bolts (11), sixteen flat washers (10), eight lockwashers (9), and eight nuts (8).	
12.		Rear panel (7) and side panels (6) assembly	*a.* Position to roof panel (5) and aline holes. *b.* Secure with sixteen bolts (15), thirty-two flat washers (14), sixteen lockwashers (13), and sixteen nuts (12).	

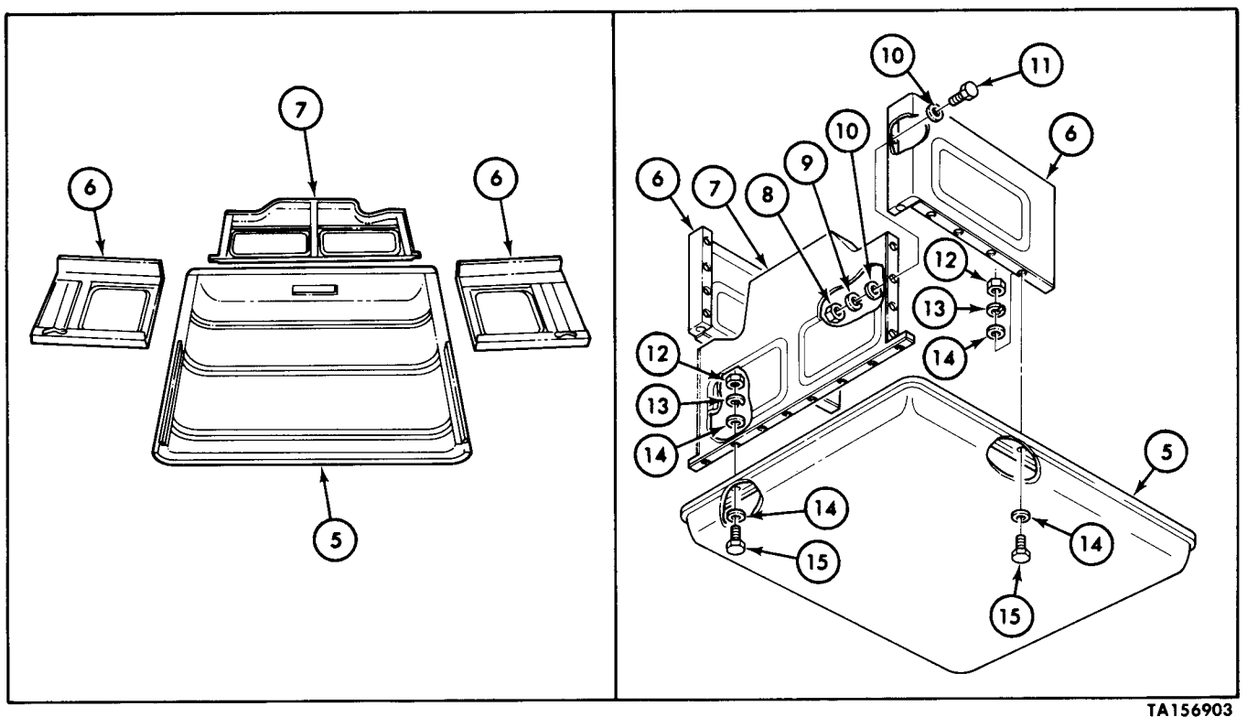

TA156903

16-31. Hardtop Kit Assembly and Installation (Cont'd)

STEP NO.	LOCATION	ITEM	ACTION	REMARKS
	c. DOOR AND PILLAR ASSEMBLY			
		NOTE		
		Assembly procedure for left and right doors (6) and pillars (5) is identical.		
13.		Two door hinges (1)	*a.* Position to pillar (5) and aline mounting holes.	
			b. Secure with four capscrews (2), lockwashers (3), and flat washers (4).	
14.		Door anchor (11)	*a.* Position to pillar (5) and aline mounting holes.	When mounted, the slotted portion of anchor should be angled toward rear of vehicle.
			b. Secure with two capscrews (10), flat washers (9), lockwashers (8), and nuts (7).	

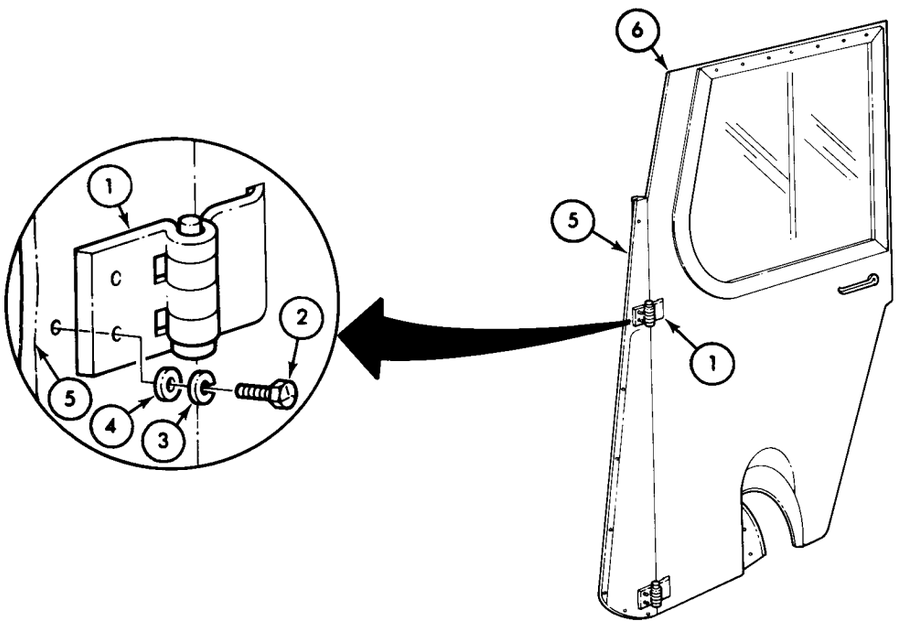

TA 156904

16-31. Hardtop Kit Assembly and Installation (Cont'd)

STEP NO.	LOCATION	ITEM	ACTION	REMARKS
				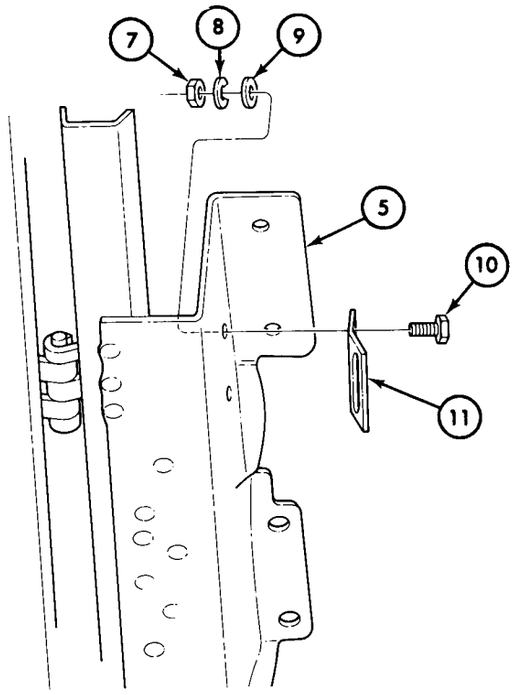
15.		Strap assembly (13)	*a.* Feed through slotted portion of both anchors (11) and (12). *b.* Tighten.	Action required to simulate a closed door.

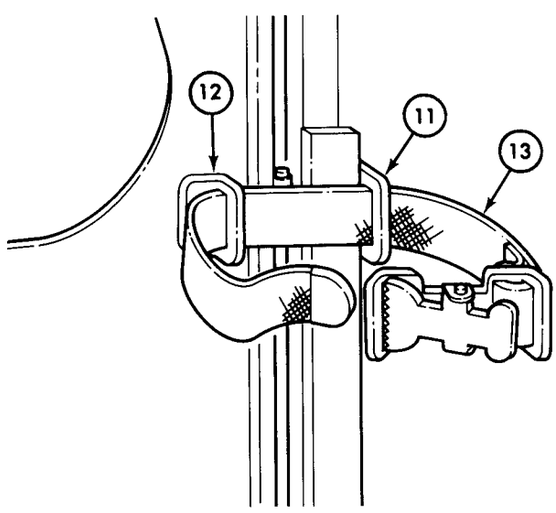

TA 156905

16-31. Hardtop Kit Assembly and Installation (Cont'd)

STEP NO.	LOCATION	ITEM	ACTION	REMARKS
d. DOOR HANDLE, LATCH, AND RELATED PARTS ASSEMBLY				
		NOTE Assembly procedure for door handle, latch, and related parts on left and right doors is identical.		
16.		Two bushings (3)	Insert in handle shaft hole (2) on both sides of door panel (9).	
17.		Outside door handle (1) and two flat washers (10) and (4)	*a.* Slide washer (10) on shaft (11) and insert through bushings (3). *b.* Slide second washer (4) on shaft (11) at interior door panel (9).	
18.		Interior door handle (5)	*a.* Place on outside door handle shaft (11) and secure with lock-washer (8), slotted nut (7), and cotter pin (6). *b.* Bend ends of cotter pin (6).	
19.		Door latch stop (12) and door latch spring (13)	*a.* Position to interior door panel (9) below door handle (5). *b.* Secure with two lock-washers (14) and cap-screws (15).	
20.		Door handle spring (17) and door handle stop (18)	*a.* Position on interior side panel (16). *b.* Secure with two lock-washers (19) and screws (20).	
21.		Door support (21)	*a.* Aline with mounting holes in interior bottom door panel (9). *b.* Secure with two lock-washers (22) and screws (23).	

16-31. Hardtop Kit Assembly and Installation (Cont'd)

STEP NO.	LOCATION	ITEM	ACTION	REMARKS

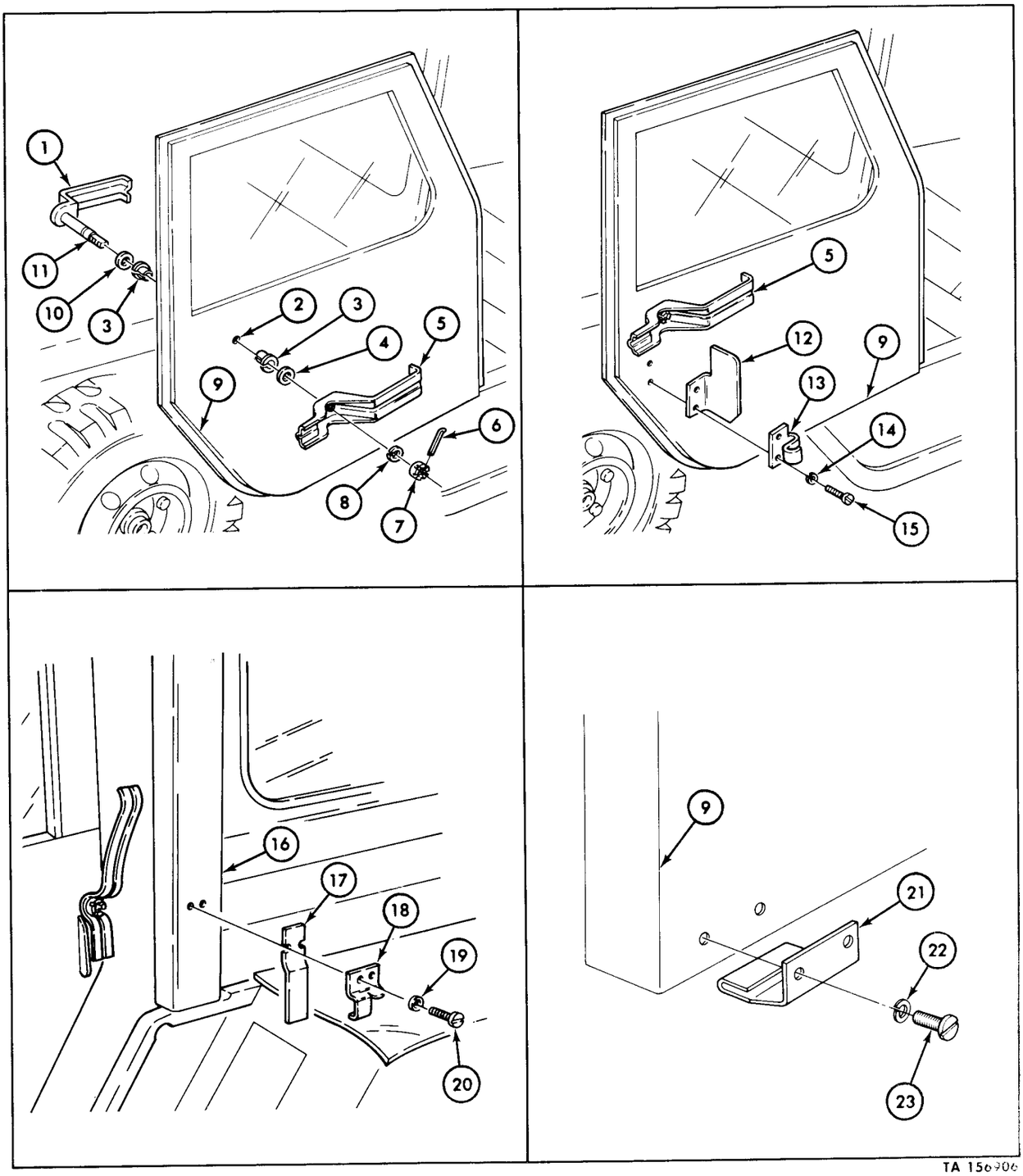

TA 156906

16-31. Hardtop Kit Assembly and Installation (Cont'd)

STEP NO.	LOCATION	ITEM	ACTION	REMARKS
e. DRILLING INSTRUCTIONS				
		CAUTION		
		Use extreme care while positioning roof, rear, and side panels assembly to body. Very little adjustment is possible after holes are drilled and installation is completed. Critical areas at this point in the installation are door fit and door latching. Inspect enclosure to body fit at all contact points, paying particular attention to door latch and door fit.		
22.		Roof, side, and rear panels assembly (1)	Position on vehicle (2) and clamp in place.	
23.		Door and pillar assembly (6)	*a.* Position on side panel (7) and windshield frame (5).	
			b. Carefully check handle and latch alinement and general fit of door assembly.	
			c. Loosen clamps (4) securing panels (3) and adjust as necessary.	
			d. Remove door and side pillar assembly (6).	
24.			Drill two 7/32 in. (5.551 mm) door pad mounting holes as follows:	
			a. Position door pad (8) on top of vehicle side panel (7).	Door pad mounting holes should be on outboard side of side panel (7).
			b. Use pad (8) for a template and mark two hole locations.	
			c. Drill holes.	
			d. Repeat operation for opposite side.	

16-31. Hardtop Kit Assembly and Installation (Cont'd)

STEP NO.	LOCATION	ITEM	ACTION	REMARKS

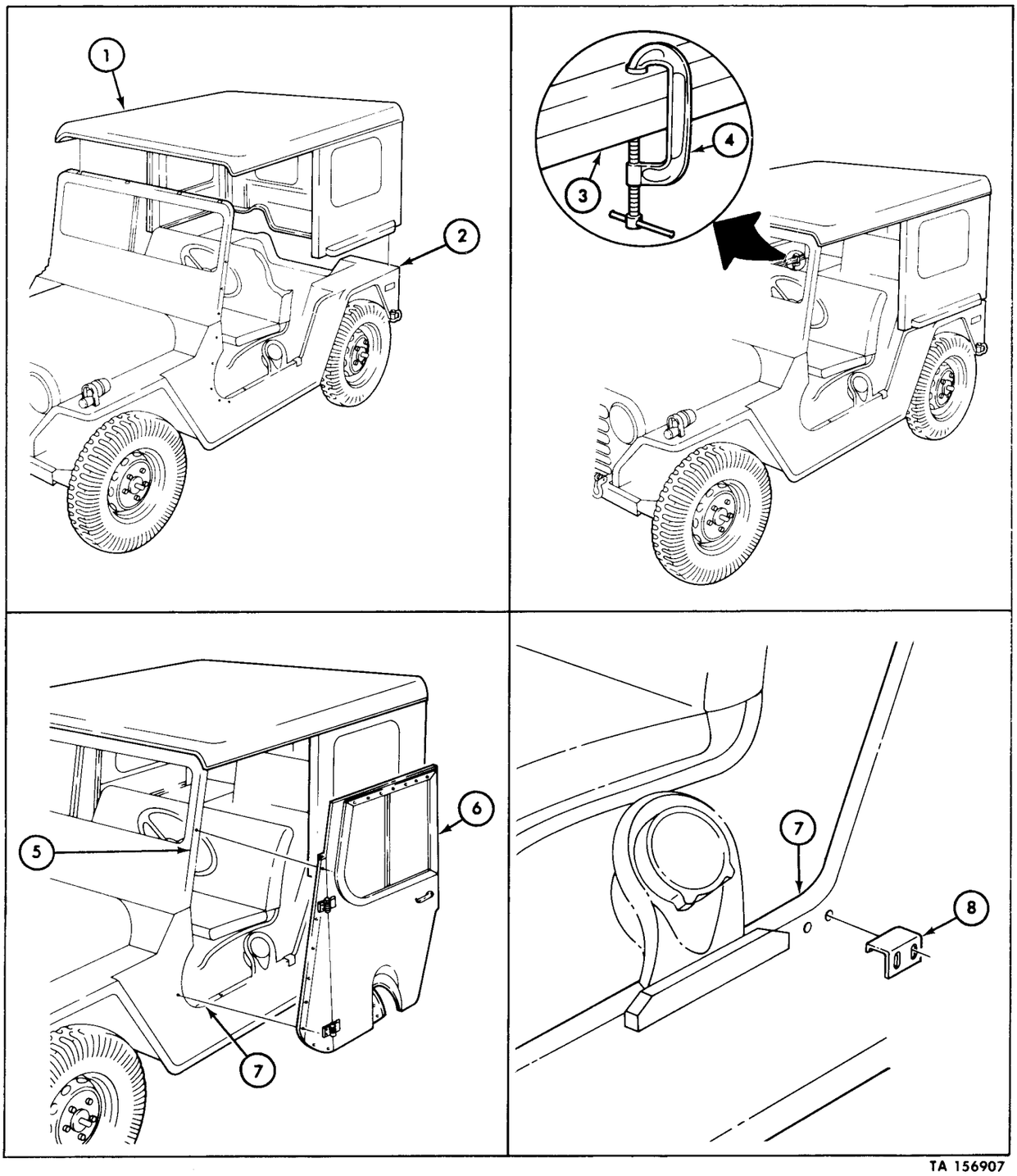

TA 156907

16-31. Hardtop Kit Assembly and Installation (Cont'd)

STEP NO.	LOCATION	ITEM	ACTION	REMARKS
25.			Drill eight 9/32 in. (7.137 mm) door and pillar assembly holes as follows: *a.* Position door and pillar assembly (2) to side panel (3) and windshield frame (1). *b.* Use door and pillar assembly (2) for a template and mark six hole locations on side panel (3), and two hole locations on windshield frame (1). *c.* Drill eight holes. *d.* Repeat operation for opposite side.	
26.			Drill one 1/4 in. (6.356 mm) door check link hole as follows: *a.* Measure 5-1/2 inches (139.700 mm) back from rear edge of door pillar (4) and 19/32 in. (15.067 mm) right from top outboard edge of side panel (3). *b.* Drill hole at this location. *c.* Repeat operation for opposite side.	
27.			Drill four door pillar mounting holes as follows: *a.* Use pillar (4) for a template and mark two hole locations on windshield panel (5) and two hole locations on dash panel (6).	

16-31. Hardtop Kit Assembly and Installation (Cont'd)

STEP NO.	LOCATION	ITEM	ACTION	REMARKS
			b. Drill two 7/32 in. (5.551 mm) holes in windshield panel (5) and two 3/8 in. (9.525 mm) holes in dash panel (6).	
			c. Repeat operation for opposite side.	

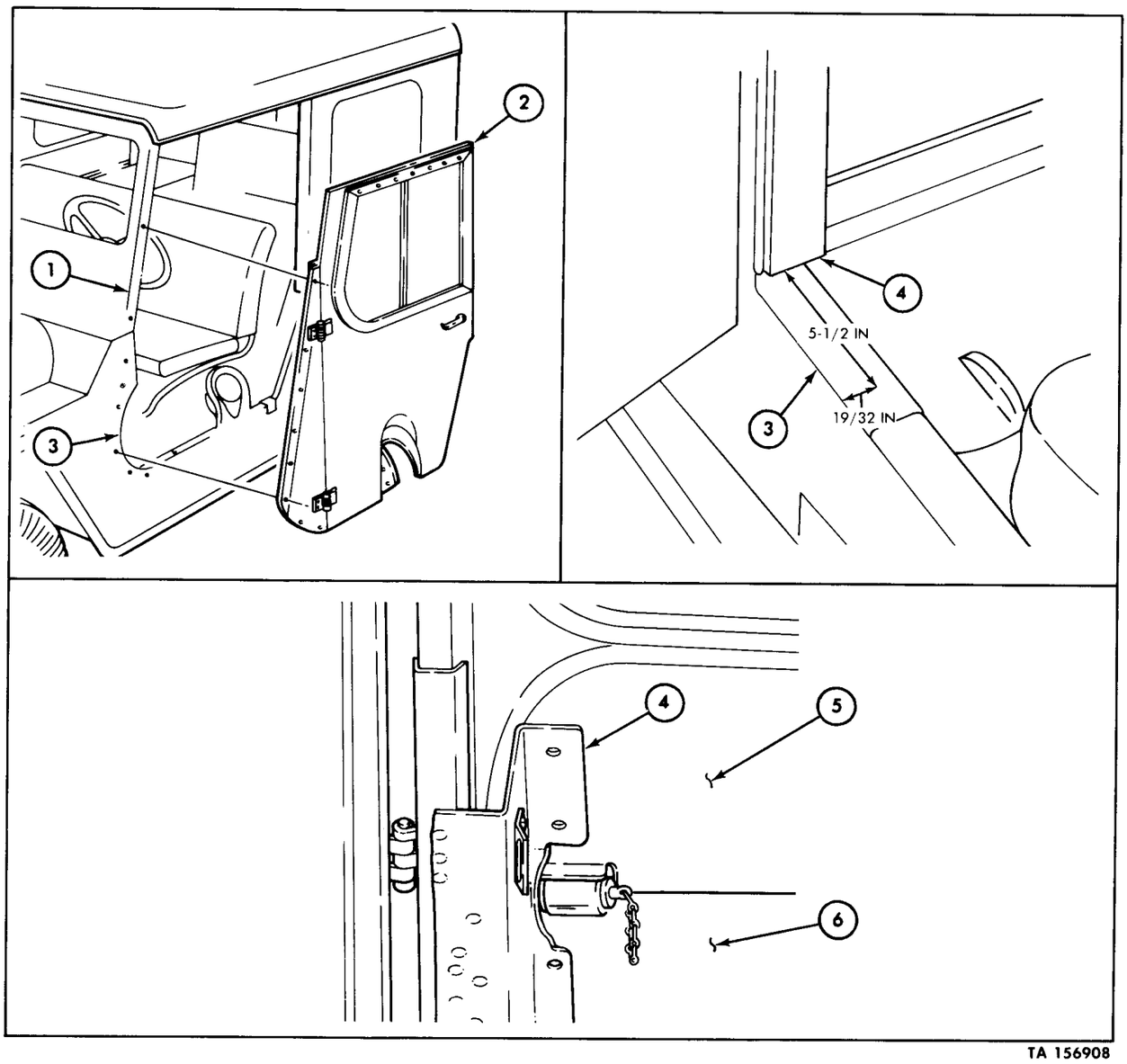

TA 156908

16-31. Hardtop Kit Assembly and Installation (Cont'd)

STEP NO.	LOCATION	ITEM	ACTION	REMARKS
28.			Drill fourteen 3/8 in. (9.525 mm) side and rear panels mounting holes as follows:	
			a. Use side, rear, and top panel assembly (3) for a template and mark ten hole locations on rear quarter panels (5), and four hole locations on rear end panel (4).	
			b. Drill ten holes in rear quarter panels (5) and four holes in rear end panel (4).	
29.			Drill four 9/32 in. (7.137 mm) roof panel mounting holes as follows:	
			a. Use roof panel (2) for a template and mark four hole locations on windshield frame (1).	
			b. Drill four holes in windshield frame (1).	

16-31. Hardtop Kit Assembly and Installation (Cont'd)

STEP NO.	LOCATION	ITEM	ACTION	REMARKS

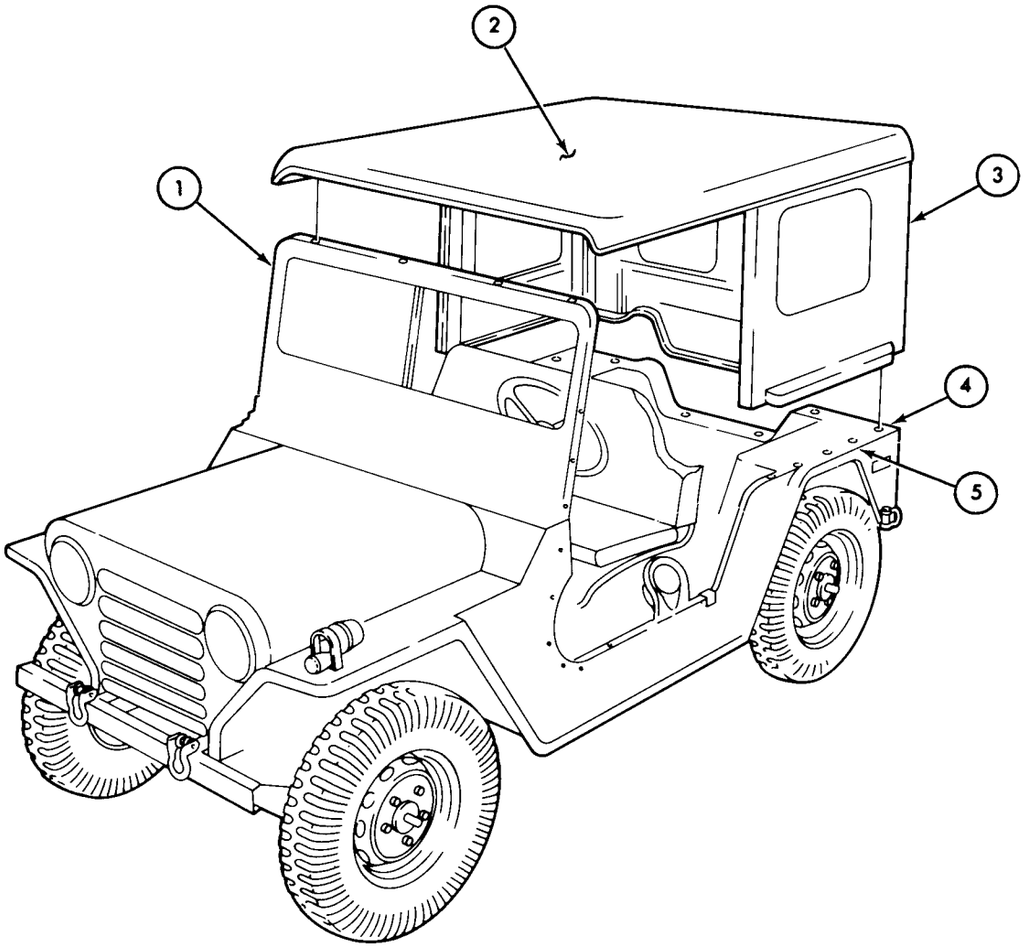

TA 156909

16-31. Hardtop Kit Assembly and Installation (Cont'd)

STEP NO.	LOCATION	ITEM	ACTION	REMARKS
f. HARDTOP KIT INSTALLATION				
30.		Door pad (2)	*a.* Position on side panel (1) and aline holes. *b.* Secure with two lockwashers (3) and tapping screws (4). *c.* Repeat operation for opposite side.	
31.		Two side panels (10)	Secure on body rear quarter panels (11) with ten capscrews (19), flat washers (18), lockwashers (17), and nuts (16).	Finger tighten only.
		NOTE Flat washers are to be positioned to prevent contact between screw head and aluminum panel.		
32.		Rear panel (12)	Secure on vehicle rear end panel (15) with four bolts (8), flat washers (9), lockwashers (13), and nuts (14).	Finger tighten only.
33.		Roof panel (7)	Secure on windshield frame (20) with four capscrews (6), flat washers (5), lockwashers (22), and nuts (21).	
34.		All rear and side panel nuts	Tighten.	

16-31. Hardtop Kit Assembly and Installation (Cont'd)

STEP NO.	LOCATION	ITEM	ACTION	REMARKS

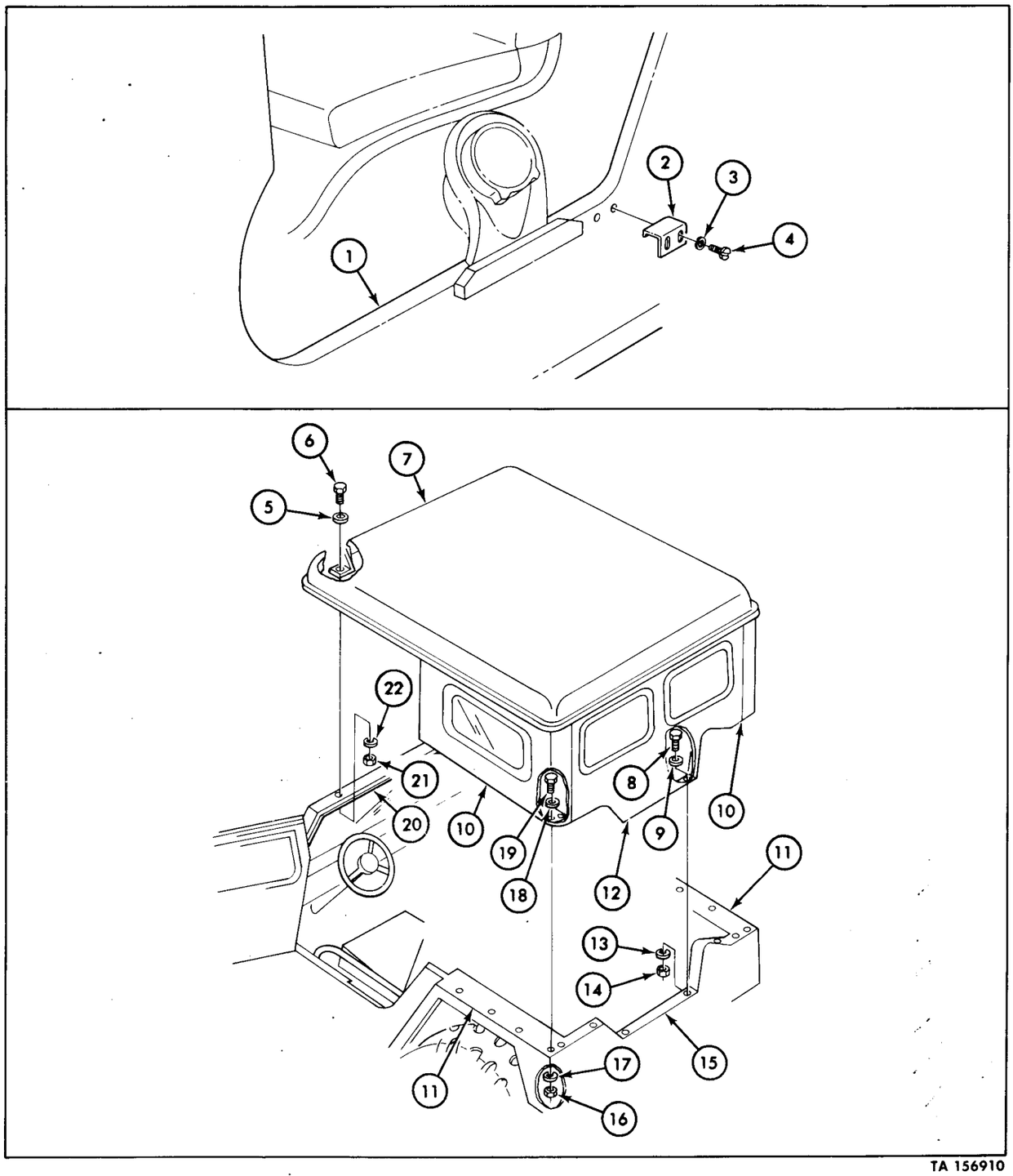

TA 156910

16-31. Hardtop Kit Assembly and Installation (Cont'd)

STEP NO.	LOCATION	ITEM	ACTION	REMARKS
35.		Door and pillar assembly (6)	*a.* Secure on body side panel (10) with six flat washers (9), lockwashers (8), screws (7), and nuts (2). *b.* Secure on dash panel (12) and windshield panel (11) with four screws (15), flat washers (14), and nuts (13). *c.* Secure on windshield frame (1) with two flat washers (3), lockwashers (4), and self-tapping screws (5).	

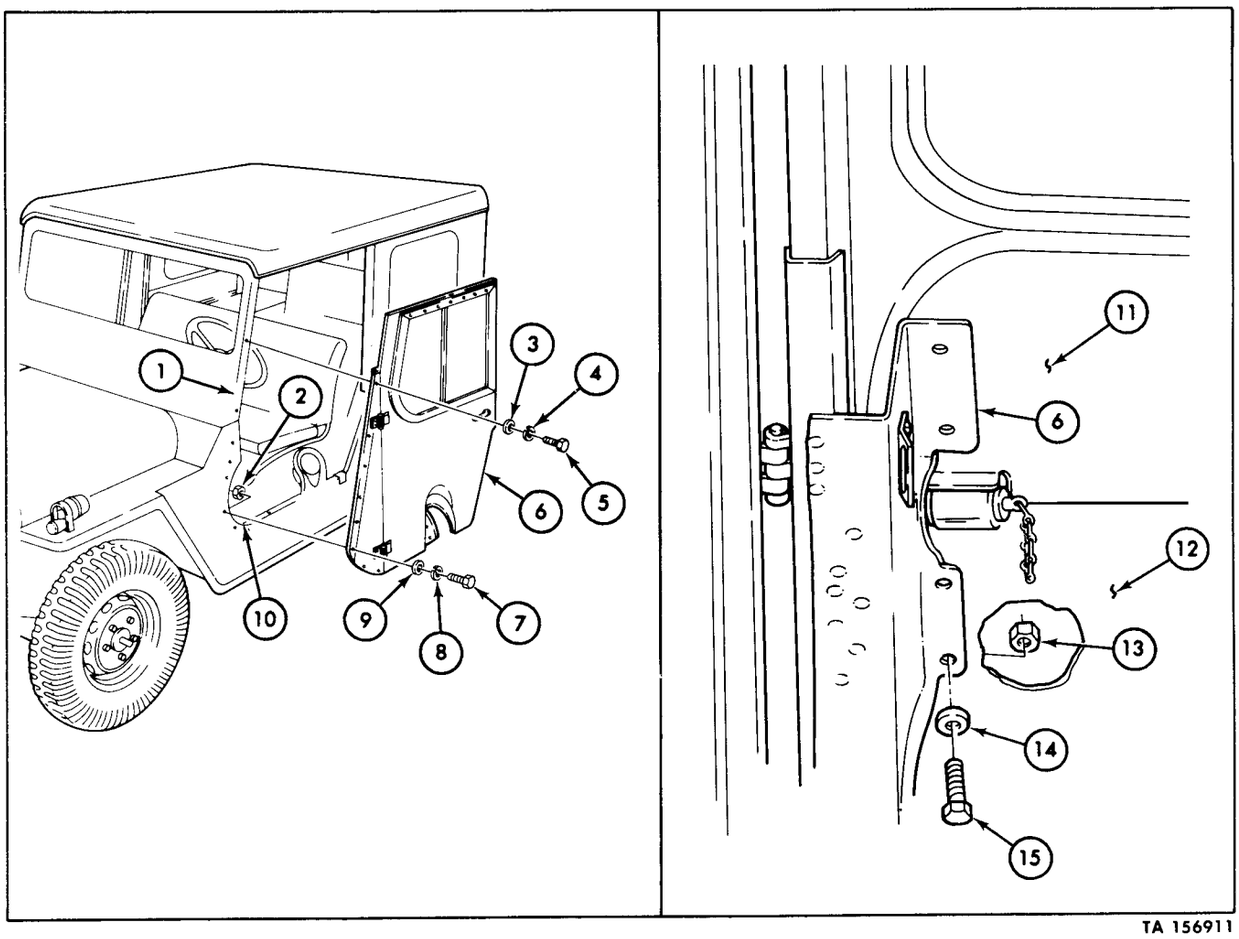

TA 156911

16-31. Hardtop Kit Assembly and Installation (Cont'd)

STEP NO.	LOCATION	ITEM	ACTION	REMARKS
36.		Door check link (18)	Secure on vehicle side panel (10) with one screw (16), two flat washers (17), one lockwasher (20), and one nut (19).	
37.		Retainer strap (21)	Loosen and adjust to tight when door is in maximum open position.	

NOTE

- Repeat steps 35, 36, and 37 for installation of opposite door.
- Carefully close doors and check fit from inside vehicle to determine if doors are centered in opening. If door does not fit flush and square with body side panel, adjust door hinge position to bring into alinement. Door fit can be varied by moving hinge pillar and hinges.

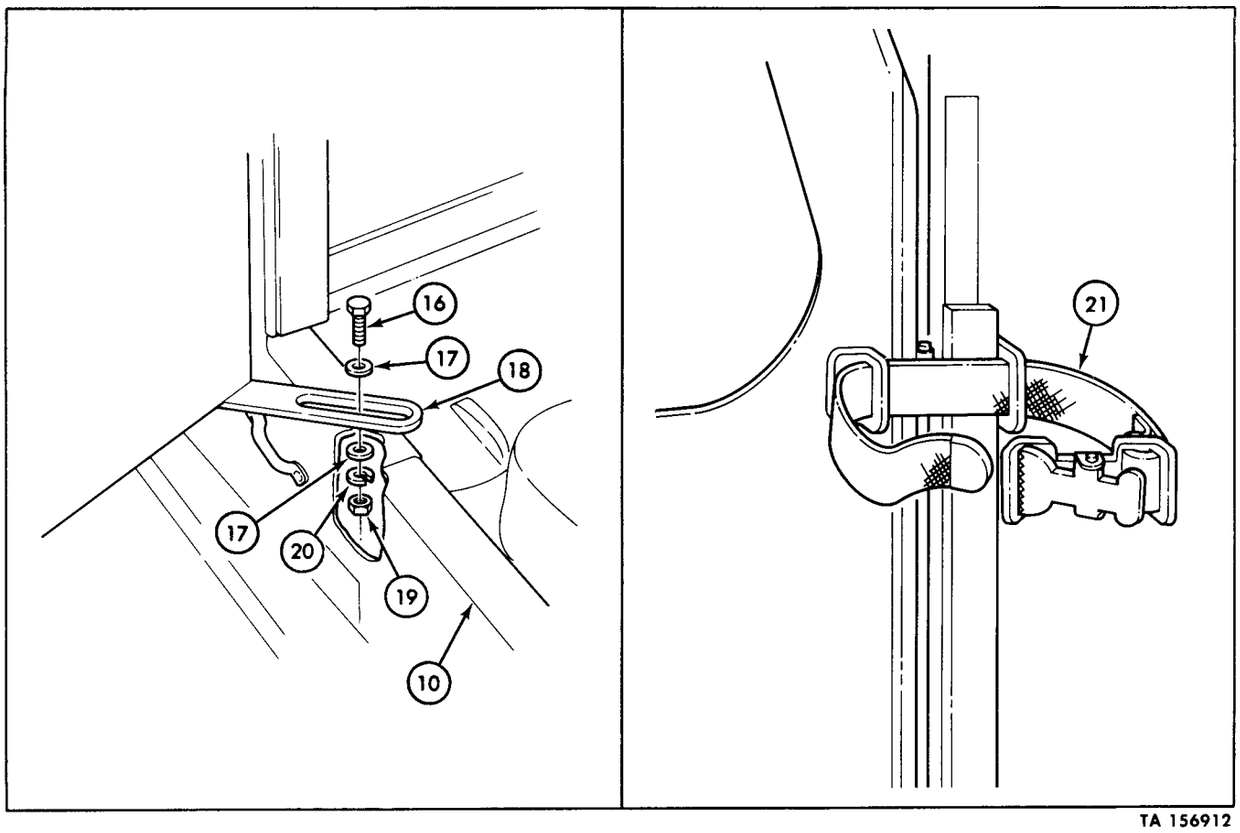

TA 156912

16-31. Hardtop Kit Assembly and Installation (Cont'd)

STEP NO.	LOCATION	ITEM	ACTION	REMARKS
38.	Hood catch (2) to windshield (3)	Two screws (1)	Remove and detach hood catch (2).	Discard screws (1).
39.		Hood catch (2)	Secure on windshield (3) with two spacers (5), and new screw and washer assemblies (4).	
40.		Splash guard seal (7)	Apply adhesive and install on vehicle left side panel (6).	

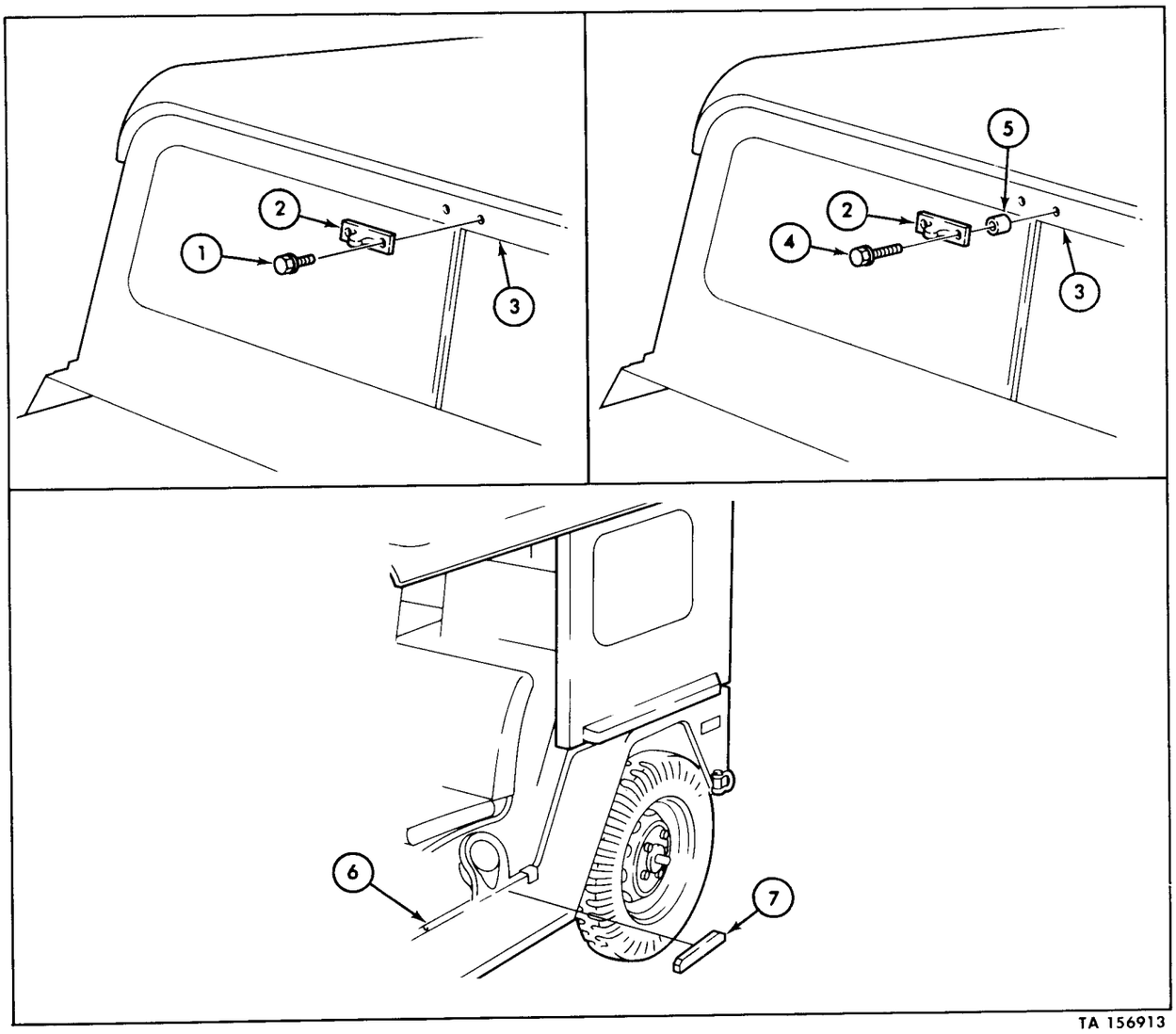

TA 156913

16-31. Hardtop Kit Assembly and Installation (Cont'd)

STEP NO.	LOCATION	ITEM	ACTION	REMARKS
41.		Caulking compound (8)	Apply on contacting surfaces of roof panel (9), side panels (10), rear panel (11), and windshield (3).	
42.	Left door panel (13)	One hardtop panel (14) and three door panel weatherstrip seals (12), (15), and (16)	Install.	See TM 9-2320-218-20-1-2.

NOTE

Right door panel takes two weatherstrip seals.

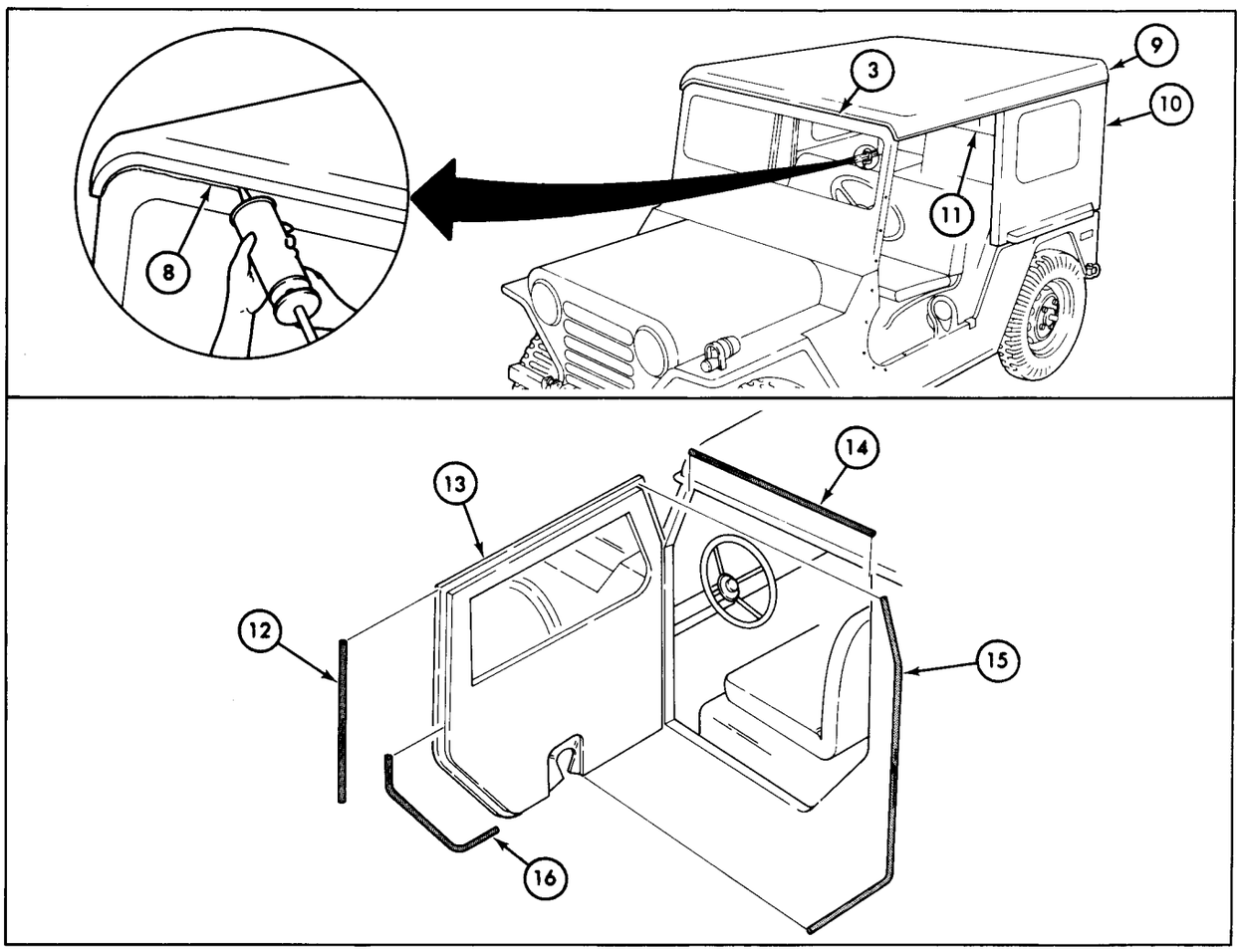

END OF TASK!

FOLLOW-ON TASK: Restore protective coating (primer) to areas where removed (TT-P-636).

TA 156914

16-32. Body Sides and Rear Glass Maintenance

This task covers:

a. Removal
b. Cleaning and Inspection
c. Installation

INITIAL SETUP:

Applicable Models
M151A2

Equipment Condition Reference
TM 9-2320-218-10

Condition Description
Parking brake set.

Test Equipment
None

Special Tools
None

Special Environmental Conditions
Heated and well-ventilated work area.

Materials/Parts
Cord
Liquid soap
Drycleaning solvent
Hand pressure oiler (NSN 8040-00-985-2604)
Adhesive (NSN 8040-00-262-9031)

Personnel Required
One mechanic
One assistant

General Safety Instructions
Drycleaning solvent is flammable and will not be used near and open flame.

Manual References
TM 9-2320-218-10
TM 9-2320-218-34P

STEP NO.	LOCATION	ITEM	ACTION	REMARKS

NOTE

- The procedure for removing and installing glass in the panel enclosure is similar to windshield removal and installation outlined in paragraph 15-19. Replace glass in a heated area, if possible, to ensure flexibility of the mounting rubber.
- Body sides and rear glass assemblies are removed and installed the same way.

16-32. Body Sides and Rear Glass Maintenance (Cont'd)

STEP NO.	LOCATION	ITEM	ACTION	REMARKS
a. REMOVAL				
1.	Inside vehicle enclosure (1)	Glass (3) and rubber seal (2) assembly	*a.* Use fingers to peel top of rubber seal (2) downward and away from metal fence (5) while forcing outward on glass (3). *b.* Gradually work along top and sides of seal (2) until free on three sides.	
		NOTE Assistant will be required during step 2.		
2.	Outside vehicle enclosure (4)	Glass (3) and rubber seal (2) assembly	Gradually pull outward until removed from enclosure (4).	

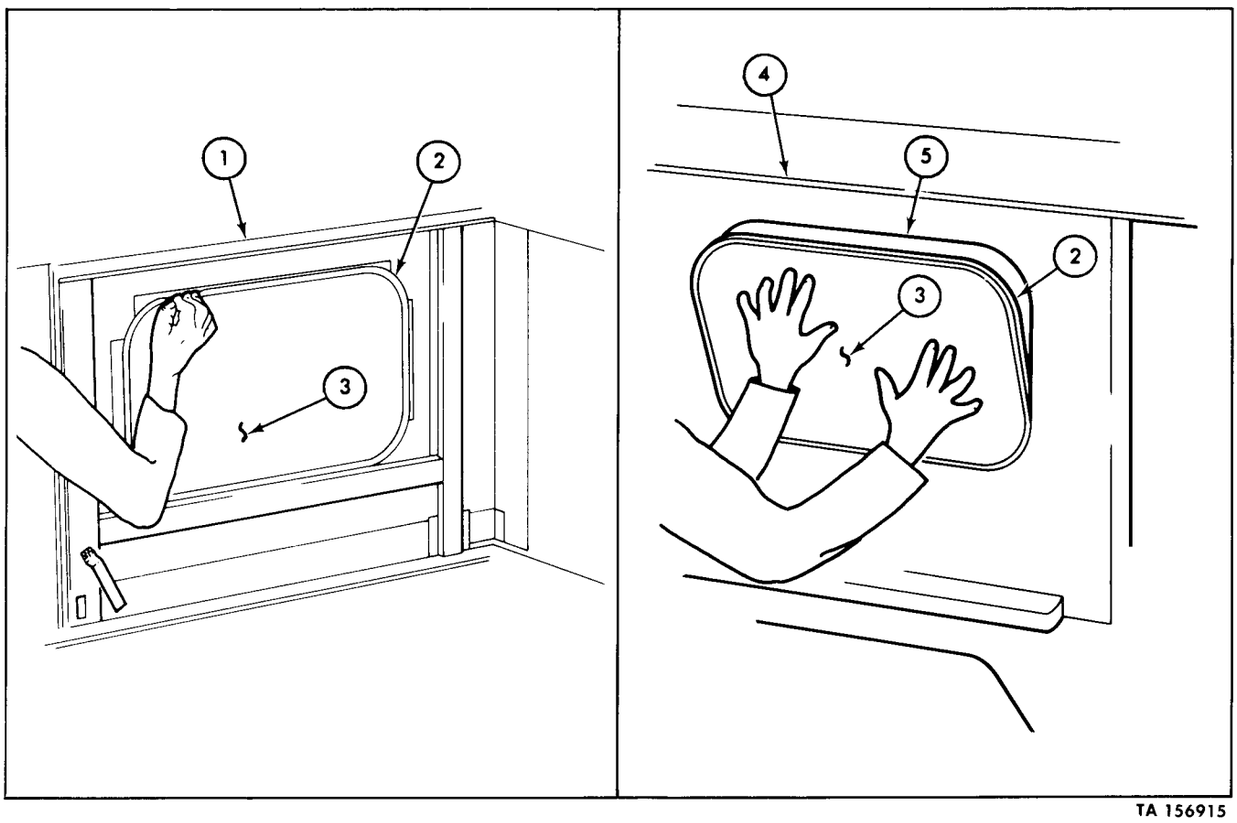

TA 156915

16-32. Body Sides and Rear Glass Maintenance (Cont'd)

STEP NO.	LOCATION	ITEM	ACTION	REMARKS
		b. CLEANING AND INSPECTION		
3.		Rubber seal (2)	*a.* Inspect for deterioration, weathering, cracking, tearing, and glass chips.	Replace as necessary.
			b. Clean glass chips from channel (3).	
		WARNING Drycleaning solvent is flammable and will not be used near an open flame. A fire extinguisher will be kept nearby when solvent is used. Use only in well-ventilated places. Failure to do this may result in injury to personnel and/or damage to equipment.		
			c. Clean hardened adhesive from channel (3) with drycleaning solvent.	
4.		Glass (1)	Inspect for scratches, cracks, and milky, foggy, or stained conditions.	Replace if scratched, cracked, milky, foggy, or stained.

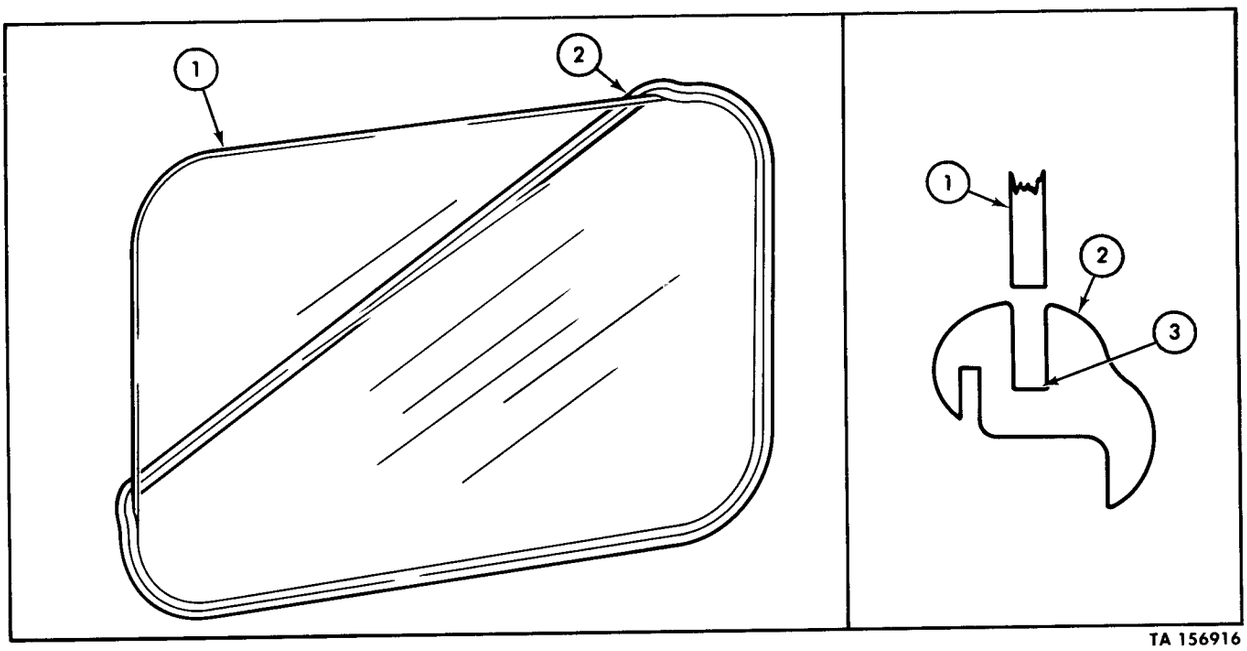

TA 156916

16-32. Body Sides and Rear Glass Maintenance (Cont'd)

STEP NO.	LOCATION	ITEM	ACTION	REMARKS
c. INSTALLATION				
5.		Rubber seal (2)	*a.* Install on glass (1).	Make sure glass (1) is seated fully into channel (3).
			b. Coat mounting groove (4) with liquid soap.	Soap will serve as a lubricant.
6.		Cord (5)	Install in rubber seal mounting groove (4), crossing in center top position.	Allow 12 inches (304.8 mm) on each end of cord (5) for pulling.

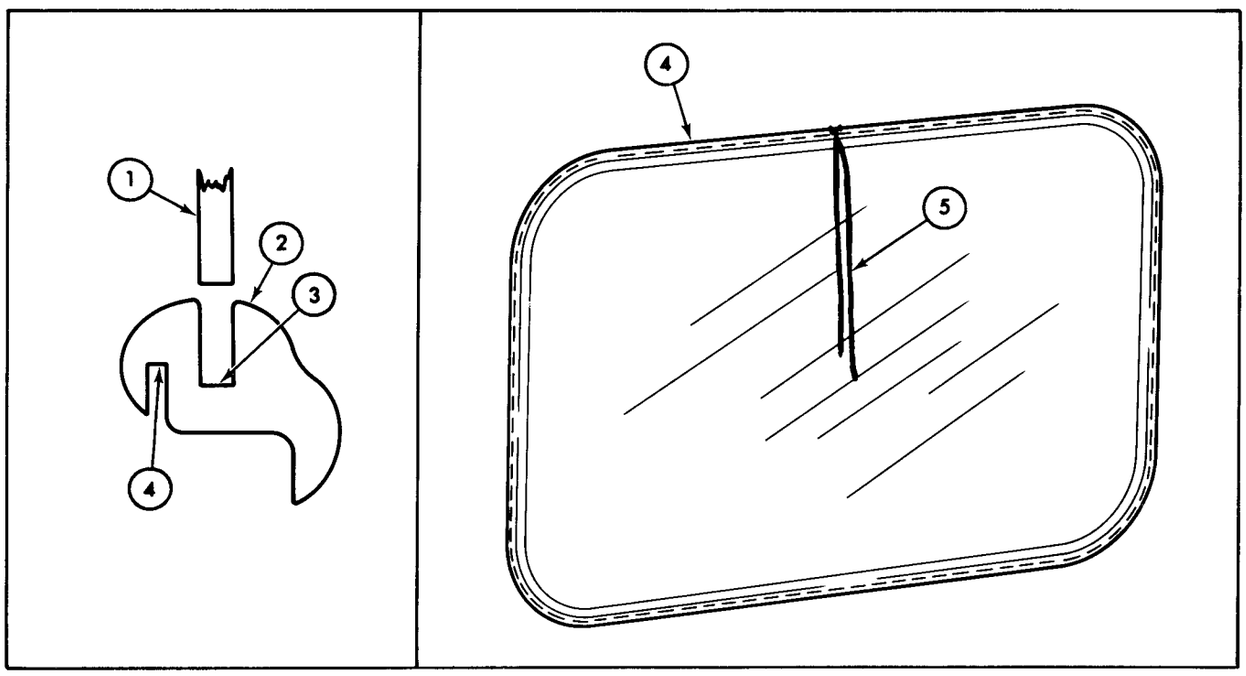

TA 156917

16-32. Body Sides and Rear Glass Maintenance (Cont'd)

STEP NO.	LOCATION	ITEM	ACTION	REMARKS
		NOTE An assistant will be required during step 7.		
7.		Glass and seal assembly (1)	*a.* Insert top edge against enclosure fence (5).	
			b. Push inward and upward on assembly (1) from outside enclosure (2), while pulling steadily on one end of cord (3) from inside enclosure (2).	
			c. Continue pulling on cord (3) and working assembly into opening until mounting lip (4) is entirely engaged on inside of fence (5).	
			d. Clean assembly (1) and enclosure (2) of excess soap.	

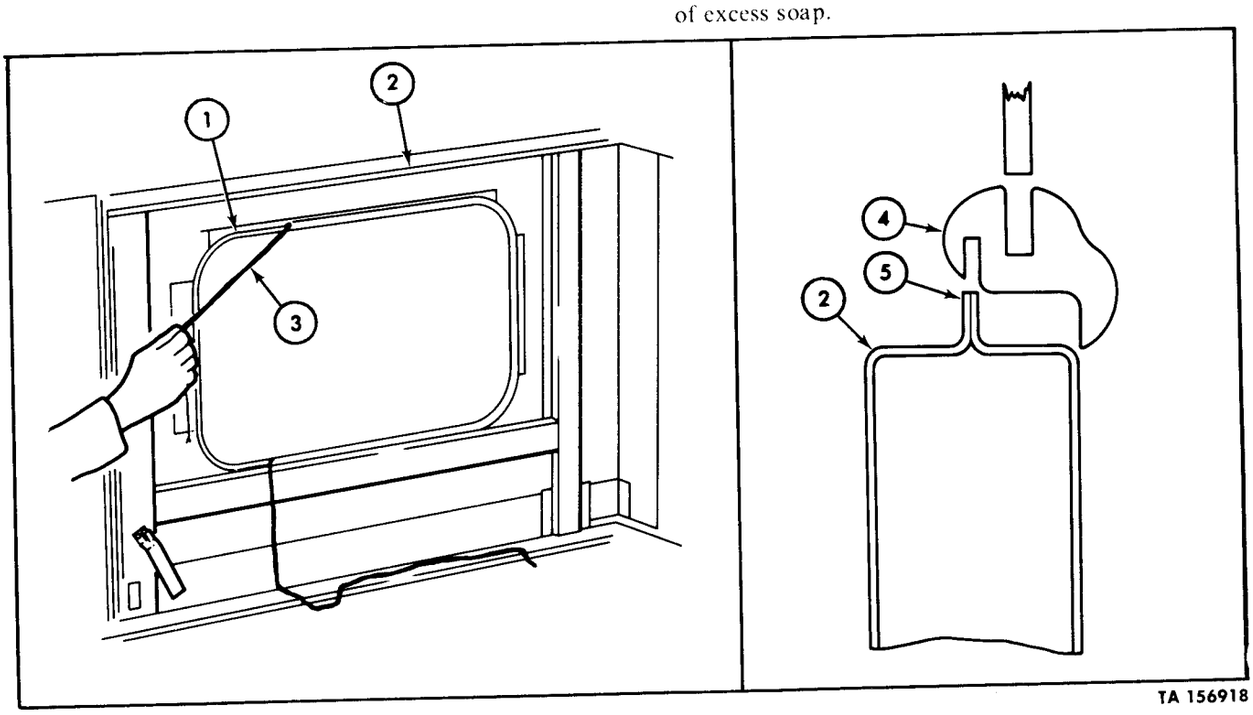

TA 156918

16-32. Body Sides and Rear Glass Maintenance (Cont'd)

STEP NO.	LOCATION	ITEM	ACTION	REMARKS
		NOTE Apply adhesive with small spout hand pressure oiler.		
8.	Outside of enclosure (2)	Adhesive	*a.* Insert tip of oiler (6) between glass (1) and seal (4). *b.* Move clockwise during application to cover entire mating surface. *c.* Insert tip of oiler (6) between rubber seal (4) and enclosure (2). *d.* Move clockwise during application to cover entire mating surface.	
		WARNING Drycleaning solvent is flammable and will not be used near an open flame. A fire extinguisher will be kept nearby when solvent is used. Use only in well-ventilated places. Failure to do this may result in injury to personnel and/or damage to equipment.		
9.		Drycleaning solvent	Apply to clean excess adhesive from glass assembly (5) and enclosure (2).	

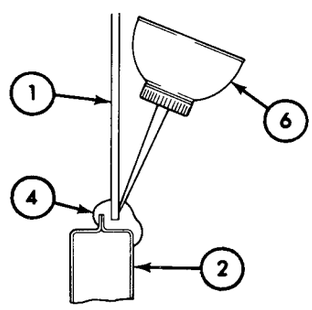

END OF TASK!

FOLLOW-ON TASK: Apply water under pressure and check for leaks.

TA 156919

Section IV. DEEPWATER FORDING KIT MAINTENANCE

16-33. General

This section provides installation procedures assigned to the direct and general support levels for the deepwater fording kit. To find a specific procedure, see the maintenance task summary.

16-34. Description

The deepwater fording kit consists of air intake and exhaust extensions which allow the vehicle to ford hardbottom water crossings up to five feet (1.5 m) in depth. The kit also contains necessary parts to couple all atmospheric, master cylinder, and fuel tank ventilation lines into the air intake system by way of a four-way fitting, fording valve, and control.

16-35. Tabulated Data — Deepwater Fording Kit

Tabulated data for the deepwater fording kit is found in table 16-3.

Table 16-3. Tabulated Data — Deepwater Fording Kit

	STANDARD	METRIC
Shipping weight of kit	71.5 lbs	32.5 kg
Fording depth w/kit installed	5 ft	1.52 m
Vehicle height w/kit installed	80 in.	2.03 m
Shipping cubage	7.67 cu ft	22 cu m

16-36. Preventive Maintenance and Troubleshooting

For information regarding preventive maintenance and troubleshooting see TM 9-2320-218-20-1-1.

16-37. Deepwater Fording Kit Task Summary

TASK PARA	PROCEDURES	PAGE NO.
16-38.	Preliminary Operations a. Vehicle Preparation b. Drilling Instructions	16-124
16-39.	Four-Way Ventilation Fitting Installation Installation	16-134
16-40.	Fording Valve Installation Installation	16-136

16-37. Deepwater Fording Kit Task Summary (Cont'd)

16-38. Preliminary Operations

This task covers:

a. Vehicle Preparation *b. Drilling Instructions*

INITIAL SETUP:

Applicable Models
M718A1, M151A2

Equipment Condition Reference
TM 9-2320-218-10

Condition Description
Parking brake set.

Test Equipment
None

Special Tools
Drill bits: 11/32, 3/8, 25/64 in.

Special Environmental Conditions
None

Materials/Parts
None

Personnel Required
One mechanic

General Safety Instructions
Eye protection will be worn during all drilling operations.

Manual References
TM 9-2320-218-20-1-2
TM 9-2320-218-34P

STEP NO.	LOCATION	ITEM	ACTION	REMARKS
	a. VEHICLE PREPARATION			
1.	Left side of windshield (1) to cowl panel (2)	Hinge pin (3)	Remove.	Discard hinge pin (3).
2.	Steering column bracket (4) to dash panel (5)	Lower left side screw-assembled lockwasher (7) and flat washer (6)	Remove.	Stow screw-assembled lockwasher (7).
3.	Master cylinder (10)	Plug (8) and spacer ring (9)	Remove.	Discard plug (8) and stow spacer ring (9).
4.	Intake manifold (14)	Screw (13), lockwasher (12), and flat washer (11)	Remove.	Stow screw (13) and lockwasher (12). Discard flat washer (11).

16-38. Preliminary Operations (Cont'd)

STEP NO.	LOCATION	ITEM	ACTION	REMARKS

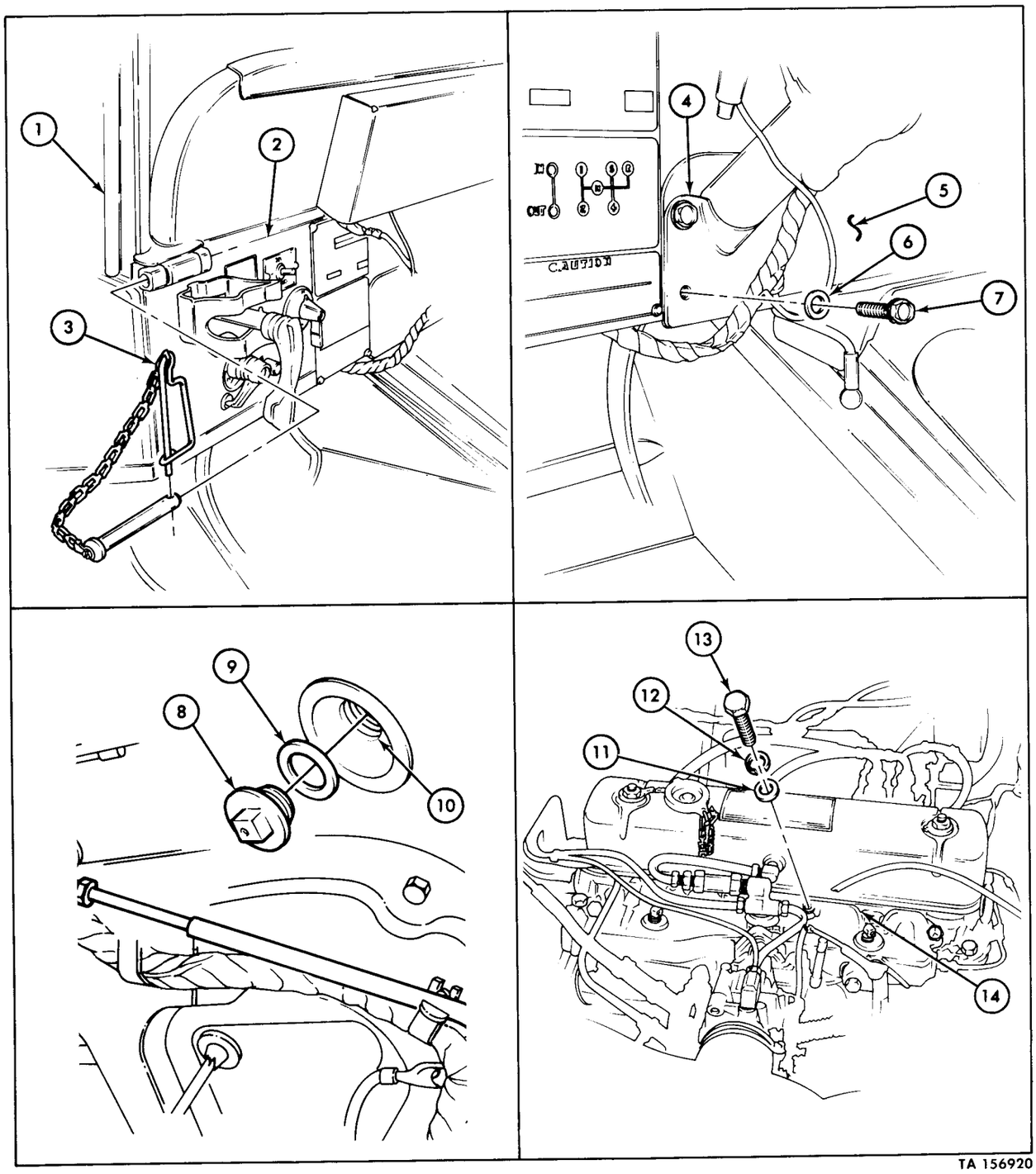

TA 156920

16-38. Preliminary Operations (Cont'd)

STEP NO.	LOCATION	ITEM	ACTION	REMARKS
5.	Carburetor ventilation tube (4) to tee assembly (1)	Nut (3)	Loosen and disconnect.	
6.	Fuel tank ventilation tube (2)	Tee assembly (1)	Unscrew and remove.	
7.	Rocker cover ventilation tube (11) to valve adapter (5)	Nut (12)	Loosen and disconnect.	
8.	Cylinder block ventilation tube (10) to intake manifold fitting (6)	Nut (9)	Loosen and disconnect.	
9.	Carburetor ventilation tube (4) to intake manifold fitting (6)	Nut (7)	Loosen and disconnect.	
10.	Intake manifold (8)	Intake manifold fitting (6)	Remove.	

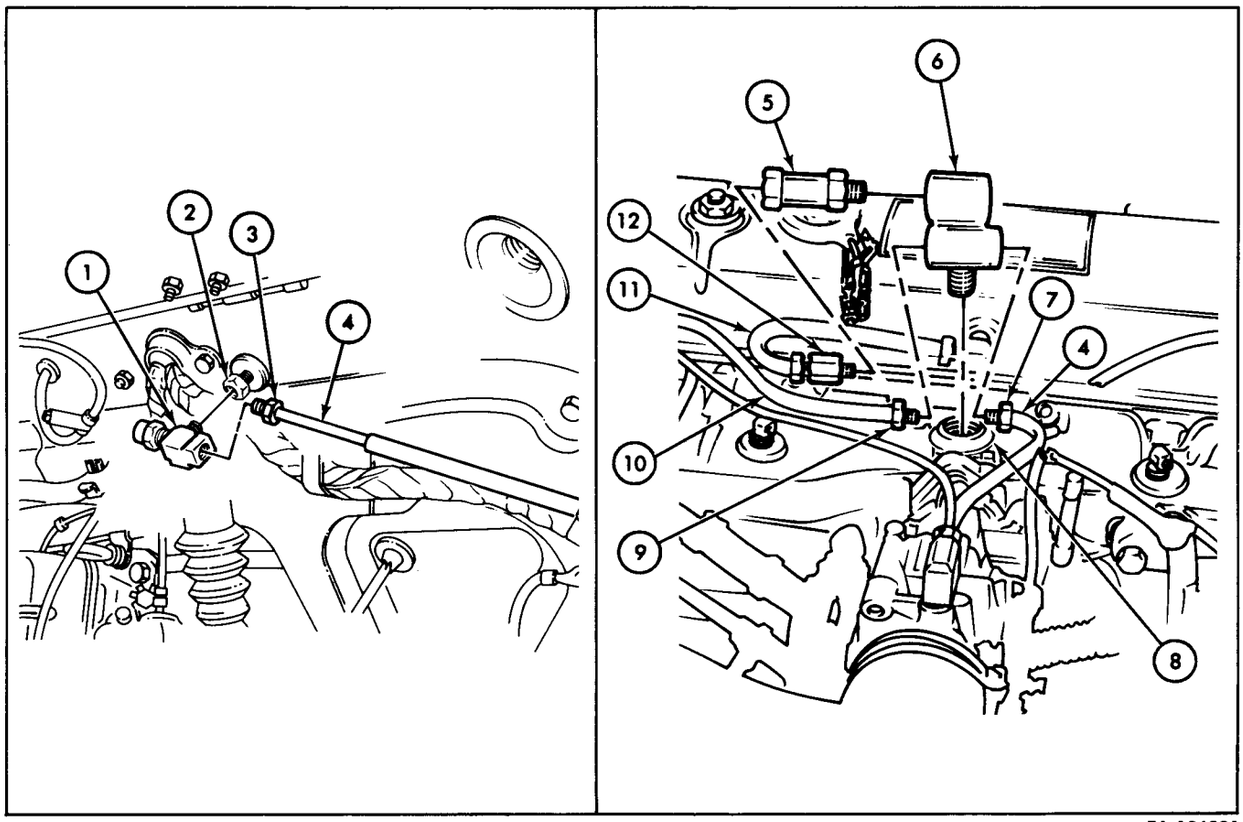

TA 156921

16-38. Preliminary Operations (Cont'd)

STEP NO.	LOCATION	ITEM	ACTION	REMARKS
11.	Cap clamp (15) to air cleaner cap (16)	Screw (14)	Loosen.	
12.	Air cleaner assembly (13)	Cap (16)	Pull and remove.	Stow cap (16).
13.	Battery compartment (19)	Battery compartment cover (18)	Loosen two latches (17) and remove.	Stow battery compartment cover (18).
14.	Tailpipe (23) to rear outlet pipe (21)	Two locknuts (20) and bolts (24)	Remove.	
15.		Tailpipe (23) and gasket (22)	Remove.	Discard gasket (22).

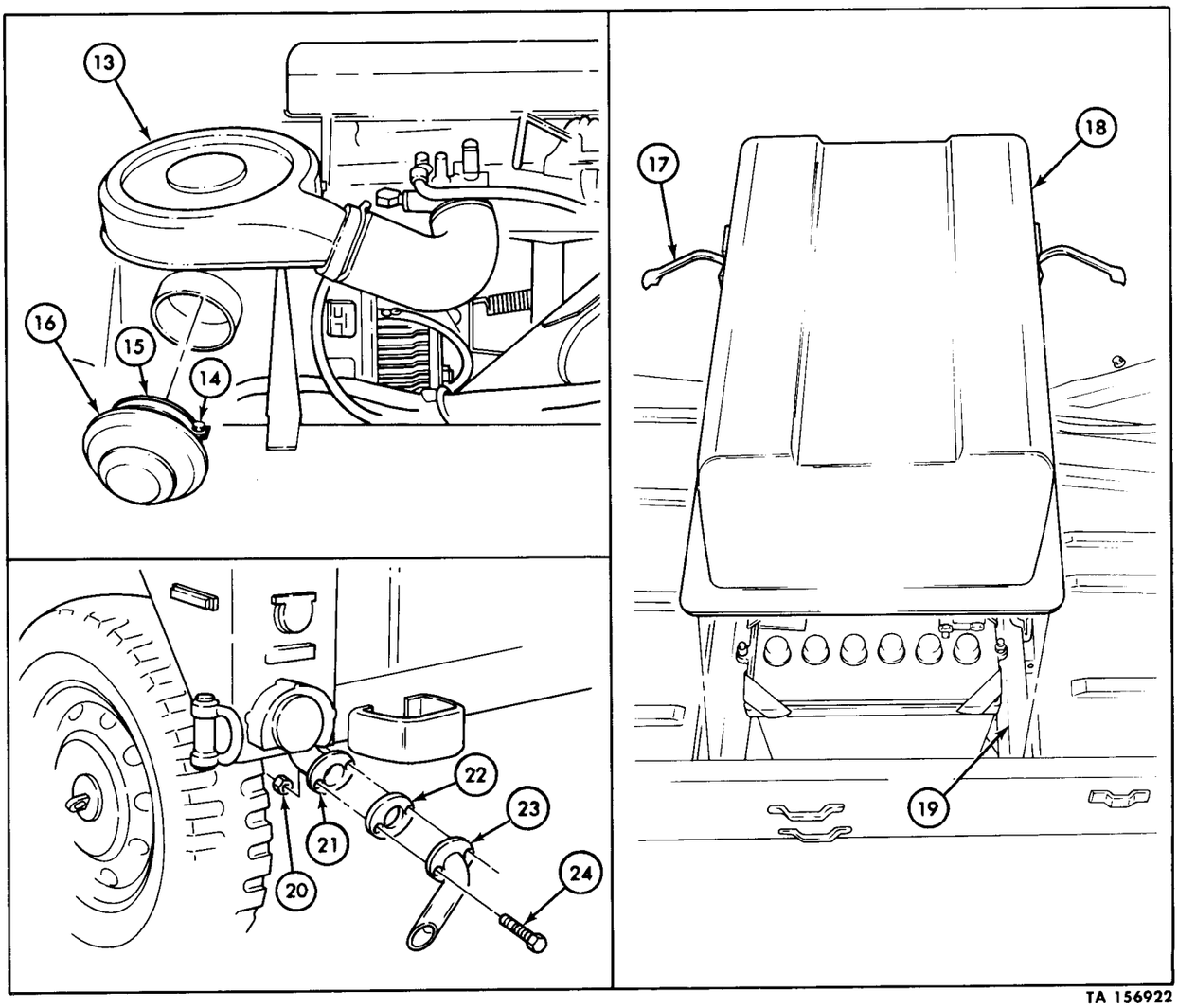

TA 156922

16-38. Preliminary Operations (Cont'd)

STEP NO.	LOCATION	ITEM	ACTION	REMARKS

b. DRILLING INSTRUCTIONS

WARNING

Metal hole drilling creates flying metal particles. Eye protection will be worn during all drilling operations.

16. Drill two 11/32 in. (8.723 mm) air cleaner hose bracket holes as follows:

a. Measure 24-1/8 in. (612.8 mm) forward from dash panel face (2) to fender top (5) and 6-3/16 in. (157.2 mm) right from outboard edge of fender (6).

b. Mark location and drill 11/32 in. (8.723 mm) hole.

c. Measure 1-23/64 in. (34.5 mm) forward from first hole location (7) and 15/16 in. (23.812 mm) right from outboard edge of fender (6).

d. Mark location and drill 11/32 in. (8.723 mm) hole.

17. Drill two 11/32 in. (8.723 mm) air cleaner tube bracket holes as follows:

16-38. Preliminary Operations (Cont'd)

STEP NO.	LOCATION	ITEM	ACTION	REMARKS
			a. Measure 4-9/16 in. (115.9 mm) forward from dash panel face (2) to left side panel (3), and 5-27/32 in. (148.4 mm) down from cowl top edge (1).	
			b. Mark hole location and drill 11/32 in. (8.723 mm) hole.	
			c. Measure 1-1/4 in. (31.8 mm) forward from first hole location (4), and 1-1/4 in. (31.8 mm) down from cowl top edge (1).	
			d. Mark hole location and drill 11/32 in. (8.73 mm) hole.	

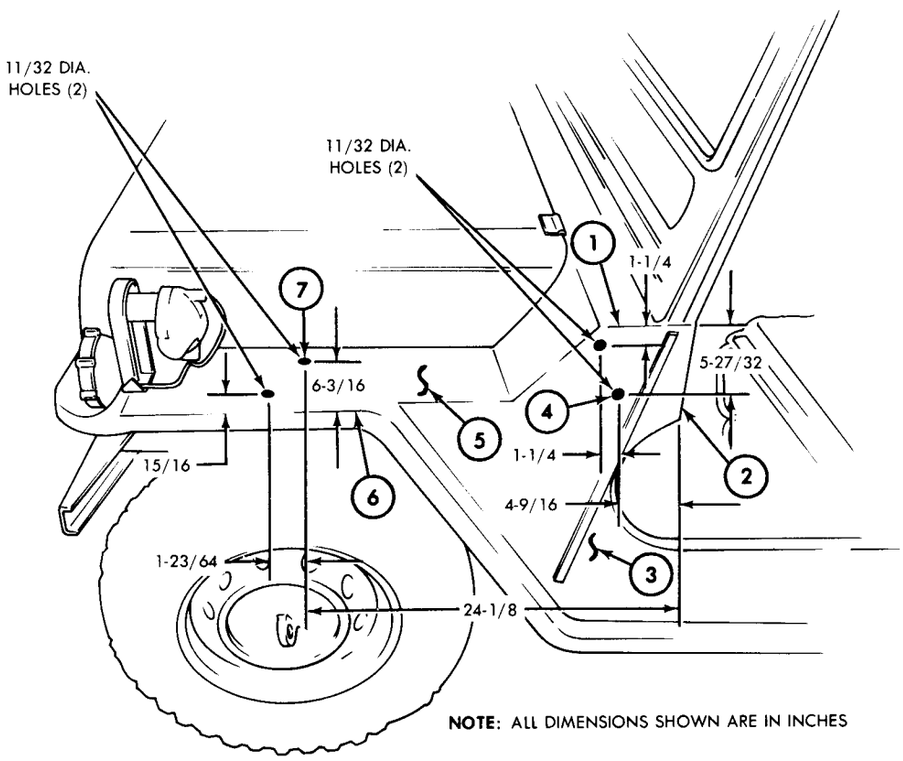

TA 156923

16-38. Preliminary Operations (Cont'd)

STEP NO.	LOCATION	ITEM	ACTION	REMARKS
18.			Drill fording valve control cable assembly hole as follows: *a.* Measure 2 in. (50.8 mm) left from choke control handle (2), and 5-11/32 in. (135.72 mm) up from dash panel bottom edge (1). *b.* Mark location and drill 3/8 in. (9.53 mm) hole.	
			NOTE Steps 19 and 29 will be performed on M151A2 vehicles only. Steps 19 and 20 will not be performed on M151A2 vehicles equipped with door and side curtain kit.	
19.			Drill 11/32 in. (8.723 mm) exhaust pipe support assembly hole as follows: *a.* Measure 5/8 in. (15.9 mm) forward from left rear quarter panel edge (4), and 5-13/16 in. (147.64) down from top of left side quarter panel (5). *b.* Mark location. *c.* Position support assembly (3) to vehicle side (5) and rear (4) panels with right lower hole (6) at marked location. *d.* Use support assembly (3) for a template to mark upper left side panel hole location (7). *e.* Drill 11/32 in. (8.723 mm) hole at this location (7).	

16-38. Preliminary Operations (Cont'd)

STEP NO.	LOCATION	ITEM	ACTION	REMARKS
20.			Drill seven support assembly holes as follows: *a.* Use support assembly (3) for a template to mark three side panel (5) and four rear panel (4) hole locations. *b.* Drill seven 11/32 in. (8.723 mm) holes at these locations.	

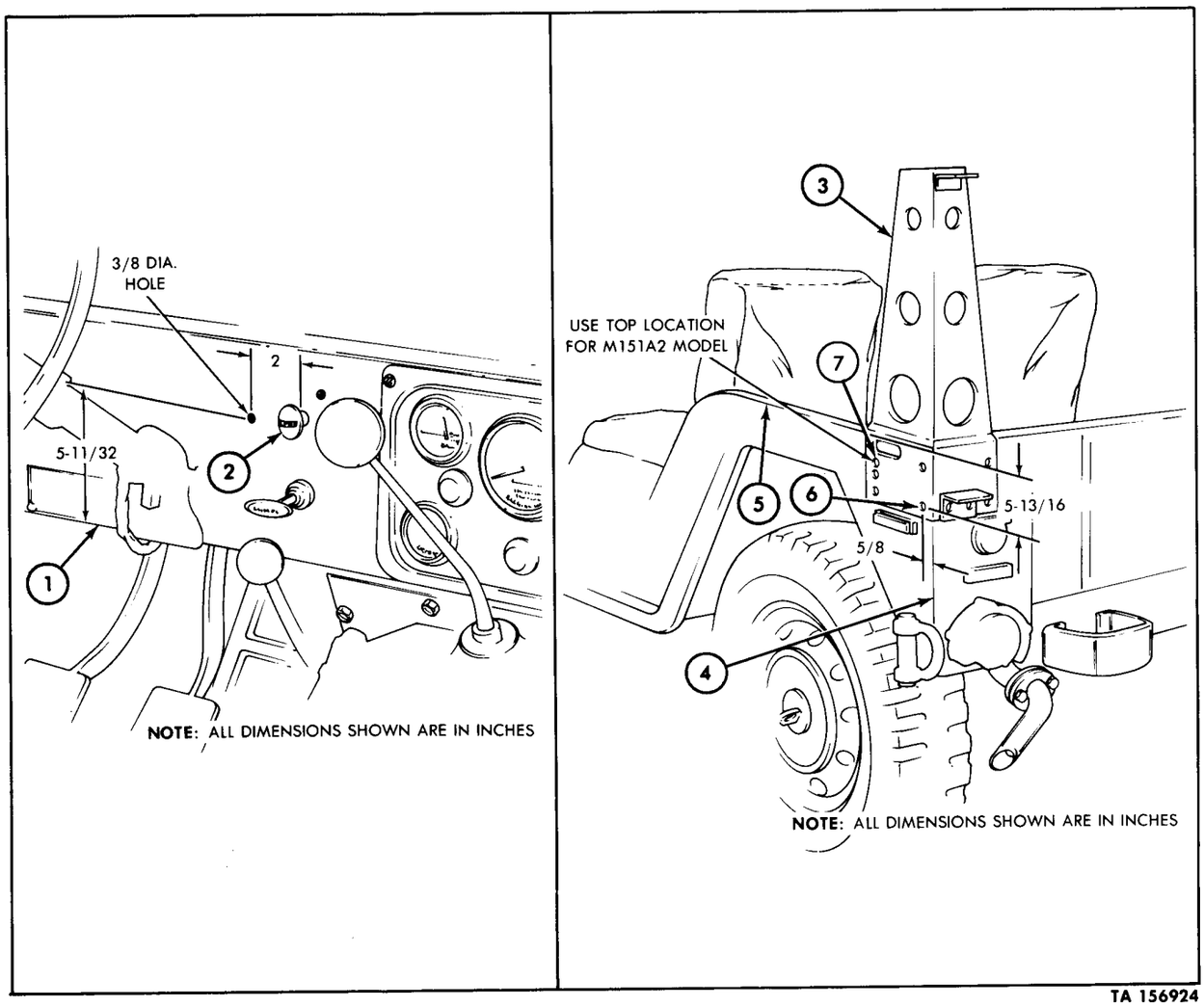

TA 156924

16-38. Preliminary Operations (Cont'd)

STEP NO.	LOCATION	ITEM	ACTION	REMARKS
		NOTE		
		Steps 21 and 22 will be performed on M718A1 vehicles only.		
21.		Tailpipe extension mating flange (7)	Secure to rear outlet pipe mating flange (9) with two screws (6), one gasket (8), and two locknuts (1).	
22.		Tailpipe extension support bracket (4) and gasket (5)	*a.* Position to tailpipe extension outer mating flange (3) and to ambulance extension flange (2).	
			b. Use for a template to scribe two hole locations on ambulance extension flange (2).	
			c. Drill two 25 64 in. (9.92 mm) holes at these locations.	

16-38. Preliminary Operations (Cont'd)

STEP NO.	LOCATION	ITEM	ACTION	REMARKS

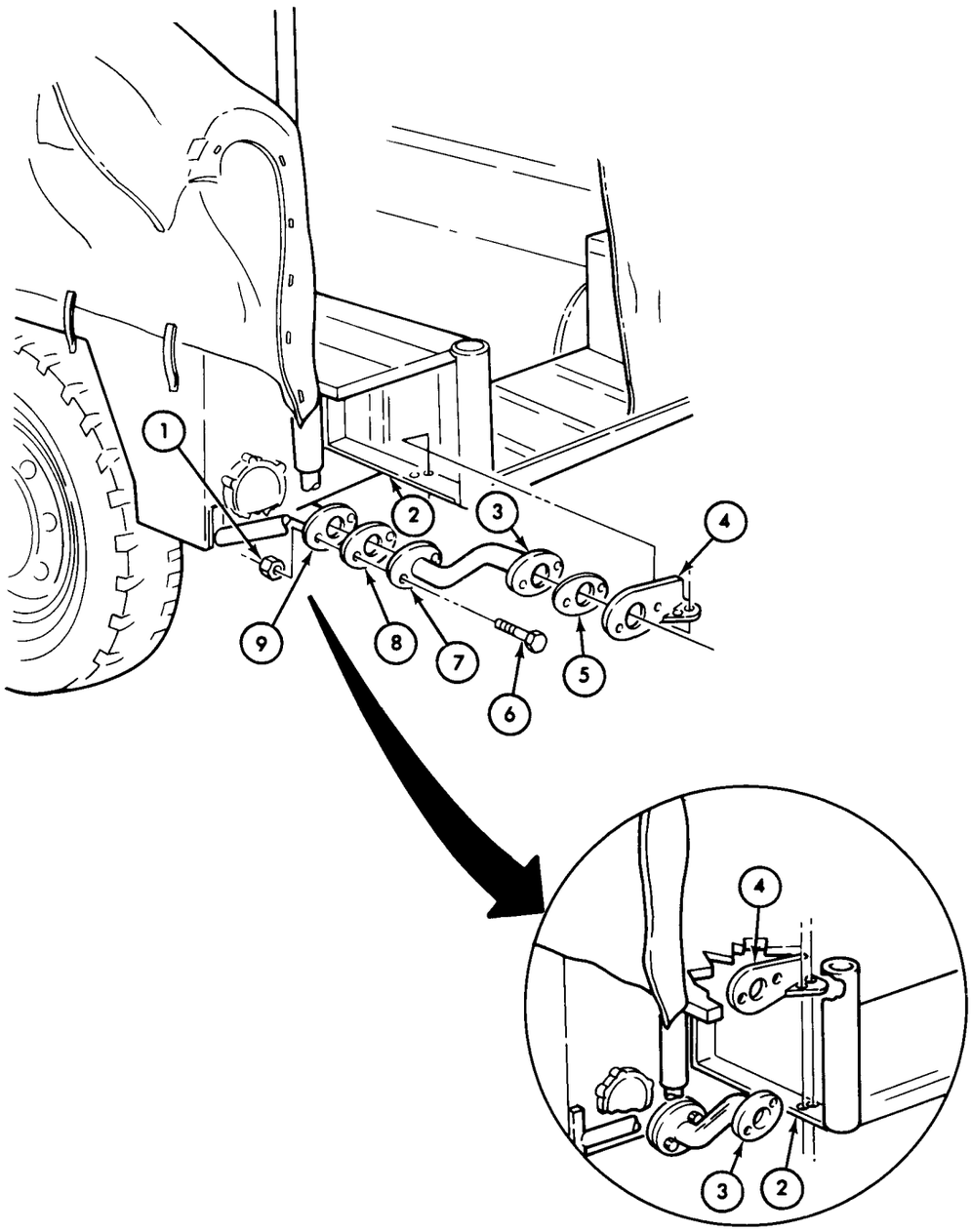

END OF TASK!

TA 156925

16-39. Four-Way Ventilation Fitting Installation

This task covers:

Installation

INITIAL SETUP:

Applicable Models
M151A2, M718A1

Equipment Condition Reference
TM 9-2320-218-10

Condition Description
Hood raised and secured.

Test Equipment
None

Special Tools
None

Special Environmental Conditions
None

Materials/Parts
None

Personnel Required
One mechanic

General Safety Instructions
None

Manual References
TM 9-2320-218-10
TM 9-2320-218-34P

STEP NO.	LOCATION	ITEM	ACTION	REMARKS
INSTALLATION				
1.		Four-way ventilation fitting (3)	Install in fuel tank ventilation tube (5).	Finger tighten only.
2.		Spacer ring (9) and master cylinder vent plug (8)	Install in master cylinder (10).	Use spacer ring (9) removed in para 16-38.
3.		Master cylinder vent tube (7)	*a.* Install in master vent plug (8).	
			b. Install in four-way ventilation fitting (3).	Finger tighten only.
4.		Carburetor vent tube (11)	Install in four-way ventilation fitting (3).	Finger tighten only.
5.		Setscrew (2)	Install in fourth opening of ventilation fitting (3).	

16-39. Four-Way Ventilation Fitting Installation (Cont'd)

STEP NO.	LOCATION	ITEM	ACTION	REMARKS
6.		Setscrew (2) and three vent tube nuts (1), (4), and (6)	Tighten securely.	

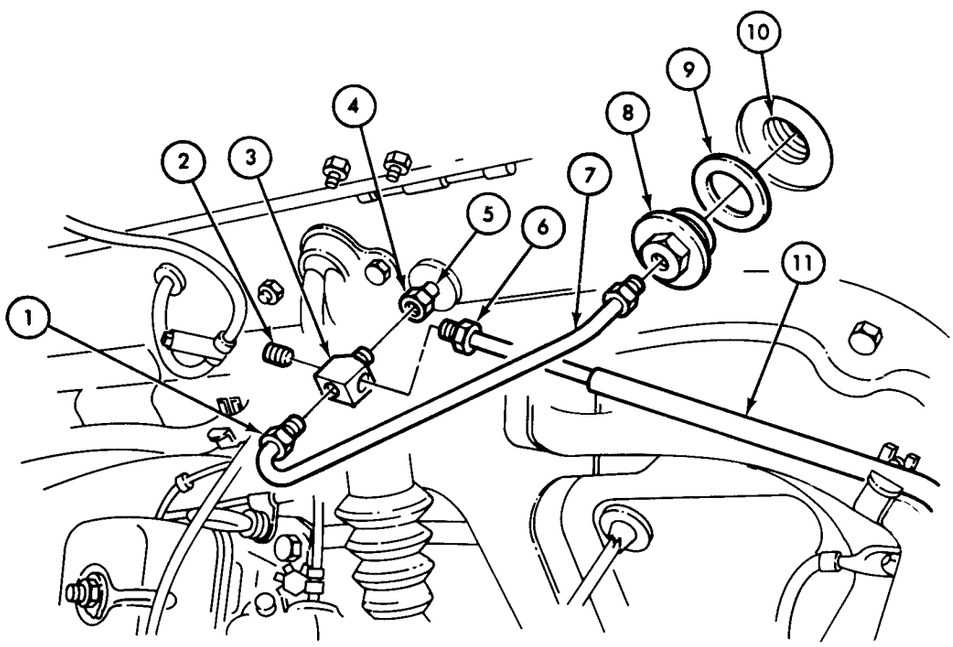

END OF TASK!

TA 156926

16-40. Fording Valve Installation

This task covers:

Installation

INITIAL SETUP:

Applicable Models	Equipment Condition Reference	Condition Description
M151A2, M178A1	TM 9-2320-218-10	Hood raised and secured.

Test Equipment
None

Special Tools
None

Special Environmental Conditions
None

Materials/Parts
None

Personnel Required
One mechanic

General Safety Instructions
None

Manual References
TM 9-2320-218-10
TM 9-2320-218-34P

STEP NO.	LOCATION	ITEM	ACTION	REMARKS
INSTALLATION				
1.		Fording valve (4)	Install in intake manifold (6).	
2.		Carburetor vent tube (5)	Install in fording valve (4).	
3.		Cylinder block vent tube (7)	Install in fording valve (4).	
		CAUTION The crankcase ventilation valve (3) must be properly installed to avoid damaging internal crimp. Always position wrench at point closest to connection being turned. Damage to ventilating system will result if valve (3) is overtightened.		
4.		Crankcase ventilation valve (3) and adapter (2) assembly	Install in fording valve (4).	

16-40. Fording Valve Installation (Cont'd)

STEP NO.	LOCATION	ITEM	ACTION	REMARKS
5.		Rocker arm cover ventilation tube (1)	Install in ventilation valve adapter (2).	

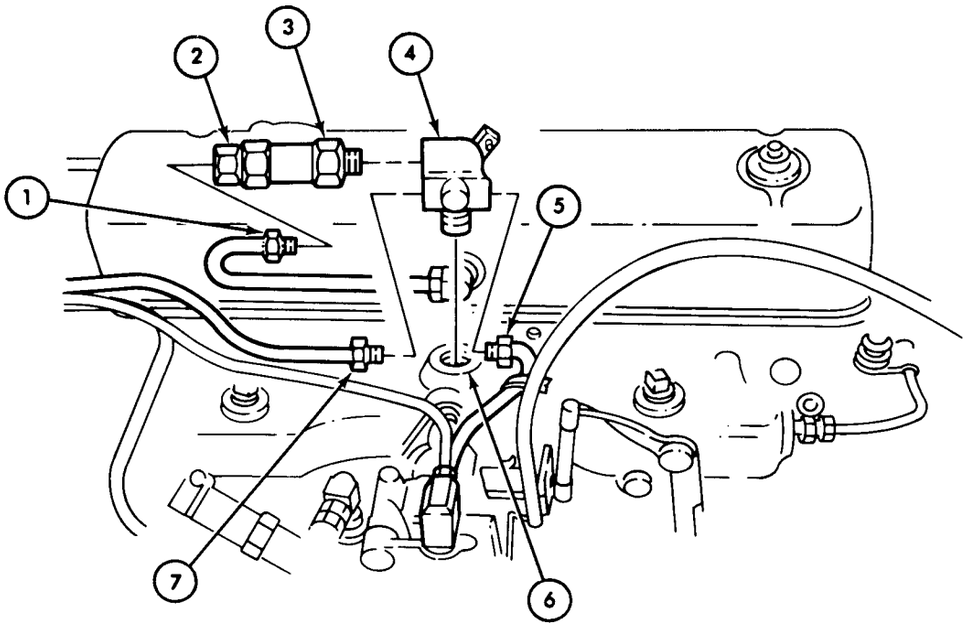

END OF TASK!

TA 156927

16-41. Fording Valve Control Installation

This task covers:

Installation

INITIAL SETUP:

Applicable Models
M151A2, M178A1

Equipment Condition Reference
TM 9-2320-218-10

Condition Description
Hood raised and secured.

Test Equipment
None

Special Tools
None

Special Environmental Conditions
None

Materials/Parts
None

Personnel Required
One mechanic

General Safety Instructions
None

Manual References
TM 9-2320-218-10
TM 9-2320-218-34P

STEP NO.	LOCATION	ITEM	ACTION	REMARKS
INSTALLATION				
1.		Retaining bracket (12)	Install in intake manifold (10) with lockwasher (15) and screw (14).	Use mounting screw (14) and lockwasher (15) removed in para 16-38.
2.		Grommet (1)	Install in firewall (3).	
3.		Instruction plate (7)	Position on valve control cable handle (8).	
4.		Valve control cable assembly (2)	*a.* Route through opening in instrument panel (5) until cable handle (8) and instruction plate (7) are tight against panel (5). *b.* Install lockwasher (6) and nut (4).	

16-41. Fording Valve Control Installation (Cont'd)

STEP NO.	LOCATION	ITEM	ACTION	REMARKS
			c. Route through grommet (1) in firewall (3).	
			d. Connect to fording valve lever (9).	
5.		Valve control assembly (2)	Secure on dash panel (5) with lockwasher (6) and nut (4).	

NOTE

Be sure fording valve lever (9) is pushed completely forward to closed position.

6.		Valve control cable (11)	*a.* Place in retaining bracket (12).	
			b. Place loop on control valve lever pivot (16).	
			c. Tighten retaining bracket screw (13).	

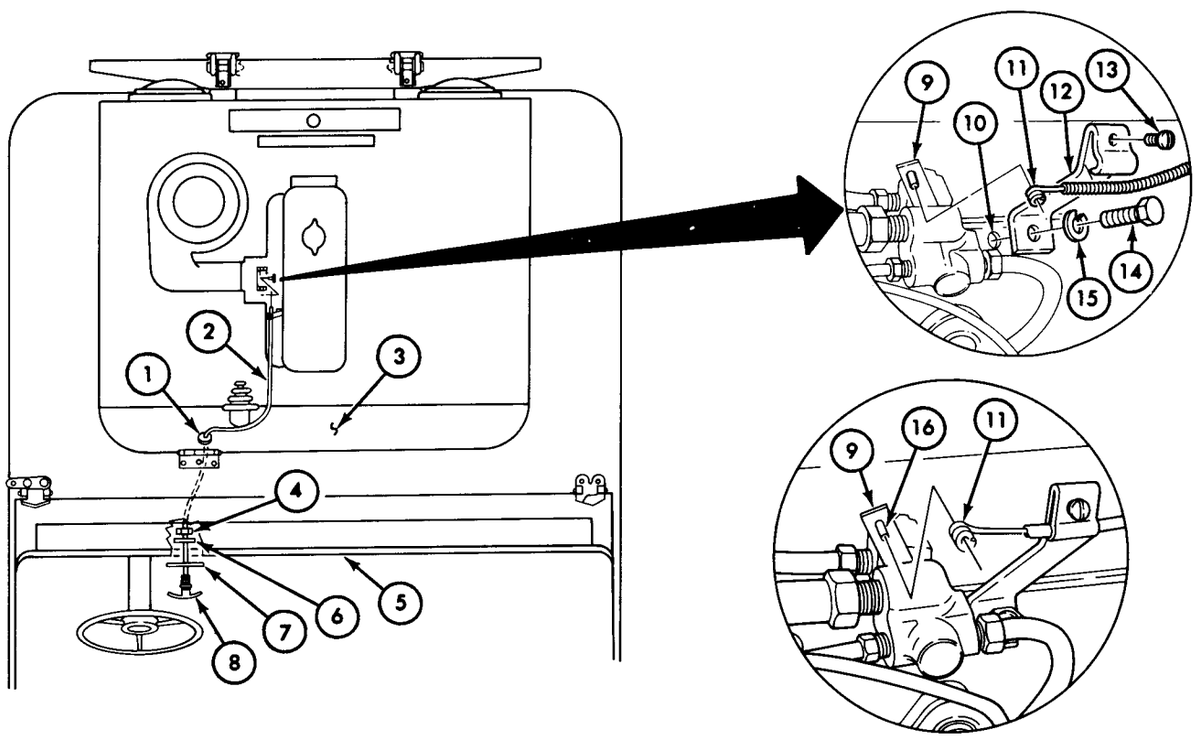

END OF TASK!

TA 156928

16-42. Air Intake Extension Hose and Tube Installation

This task covers:

Installation

INITIAL SETUP:

Applicable Models	Equipment Condition Reference	Condition Description
M151A2, M718A1	TM 9-2320-218-10	Hood raised and secured.

Test Equipment
None

Special Tools
None

Special Environmental Conditions
None

Materials/Parts
None

Personnel Required
One mechanic

General Safety Instructions
None

Manual References
TM 9-2320-218-10
TM 9-2320-218-34P

STEP NO.	LOCATION	ITEM	ACTION	REMARKS
INSTALLATION				
1.		New windshield hinge pin (2)	Install in left windshield hinge (1).	
2.		Support clamp (9)	Slide over long section of air intake tube (3).	Position approximately 20 in. (507.99 mm) from upper end of tube (3).
3.		Intake tube support (8)	Attach on clamp (9) with screw (7) and locknut (10).	Finger tighten only.
		NOTE On vehicles with door and side curtain kit, it will be necessary to delay attachment of support to tube as a final operation since support will be on inside of vehicle and a hole must be located and cut in canvas for attaching screw.		
4.		Cap clamp (6)	Slide over upper end of tube (3).	Use cap clamp (6) removed from air cleaner in para 16-38.

16-42. Air Intake Extension Hose and Tube Installation (Cont'd)

STEP NO.	LOCATION	ITEM	ACTION	REMARKS
5.		Cap (5)	Position over upper end of tube (3).	Use cap (5) removed from air cleaner in para 16-38.
6.		Clamp (6)	*a.* Slide up tube (3) and over lip of deflector cap (5). *b.* Tighten clamp screw (4).	

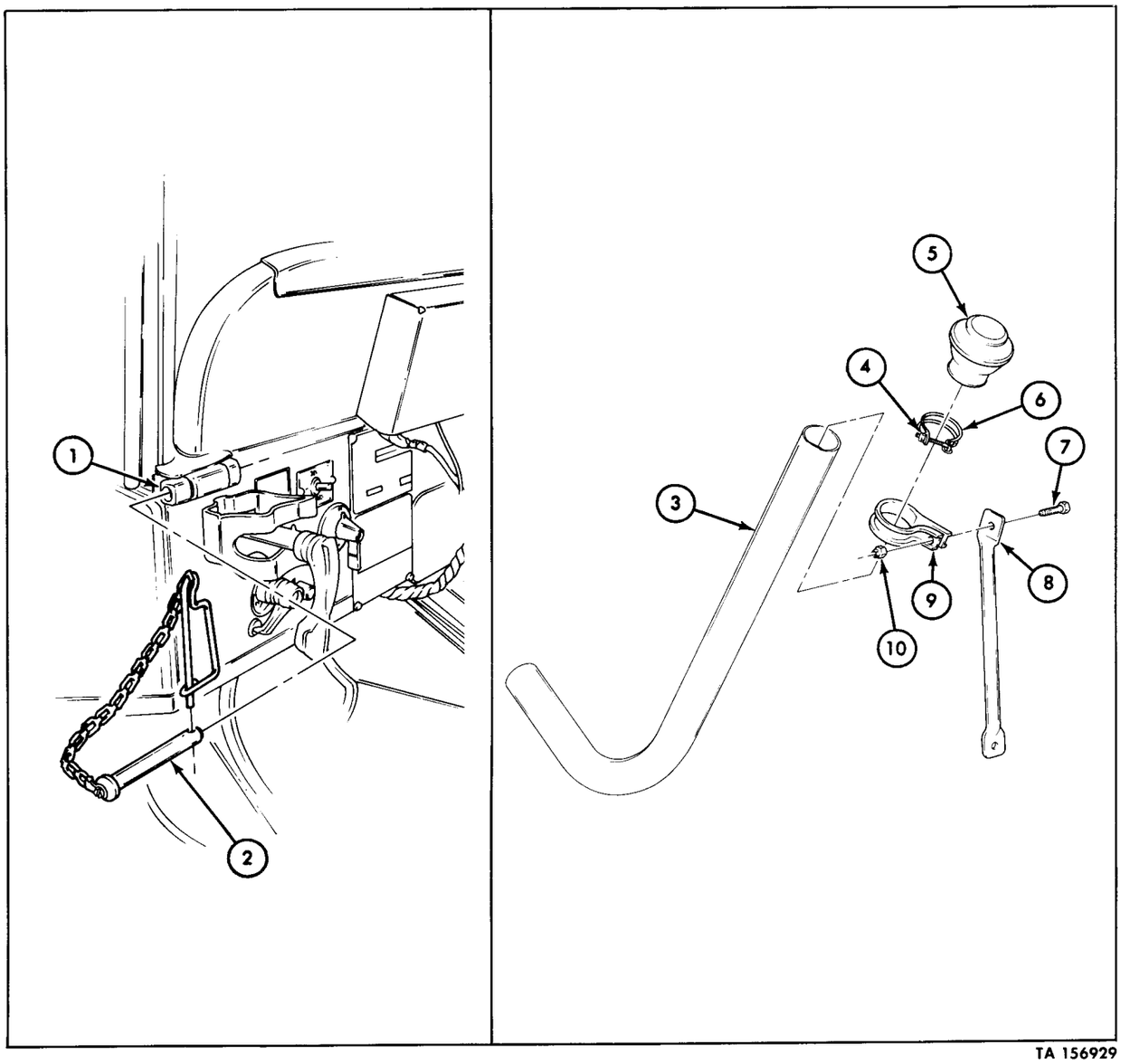

TA 156929

16-42. Air Intake Extension Hose and Tube Installation (Cont'd)

STEP NO.	LOCATION	ITEM	ACTION	REMARKS
7.		Tube bracket (9)	Attach to side panel (7) with two bolts (8), flat washers (6), and lock-nuts (5).	Finger tighten only.
8.		Intake tube (1)	Position on side panel (7) and aline with tube bracket (9).	
9.		Intake tube support (2)	Attach on steering column bracket (3) with screw-assembled lockwasher (4).	Use screw-assembled lockwasher (4) removed in para 16-38. Finger tighten only.
10.		Two clamps (16)	Place over ends of extension hose (17).	
			NOTE Compress extension hose (17) at both ends while installing on air cleaner (11) and intake tube (1). Make sure hose (17) is curving freely and is equally spaced on attaching ends.	
11.		Extension hose (17) and two clamps (16)	*a.* Install on air cleaner (11) and intake tube (1). *b.* Tighten clamp screws (18).	
12.		Intake tube (1)	Install on fender (14) with retaining bracket (13), two bolts (12), and locknuts (15).	Finger tighten only.
13.		Intake tube side panel (9) and fender (13) retaining brackets	Tighten locknuts (5) and (15).	
14.		Intake tube support (2)	*a.* Check alinement. *b.* Tighten clamp locknut (10). *c.* Tighten screw-assembled lockwasher (4).	

16-42. Air Intake Extension Hose and Tube Installation (Cont'd)

STEP NO.	LOCATION	ITEM	ACTION	REMARKS

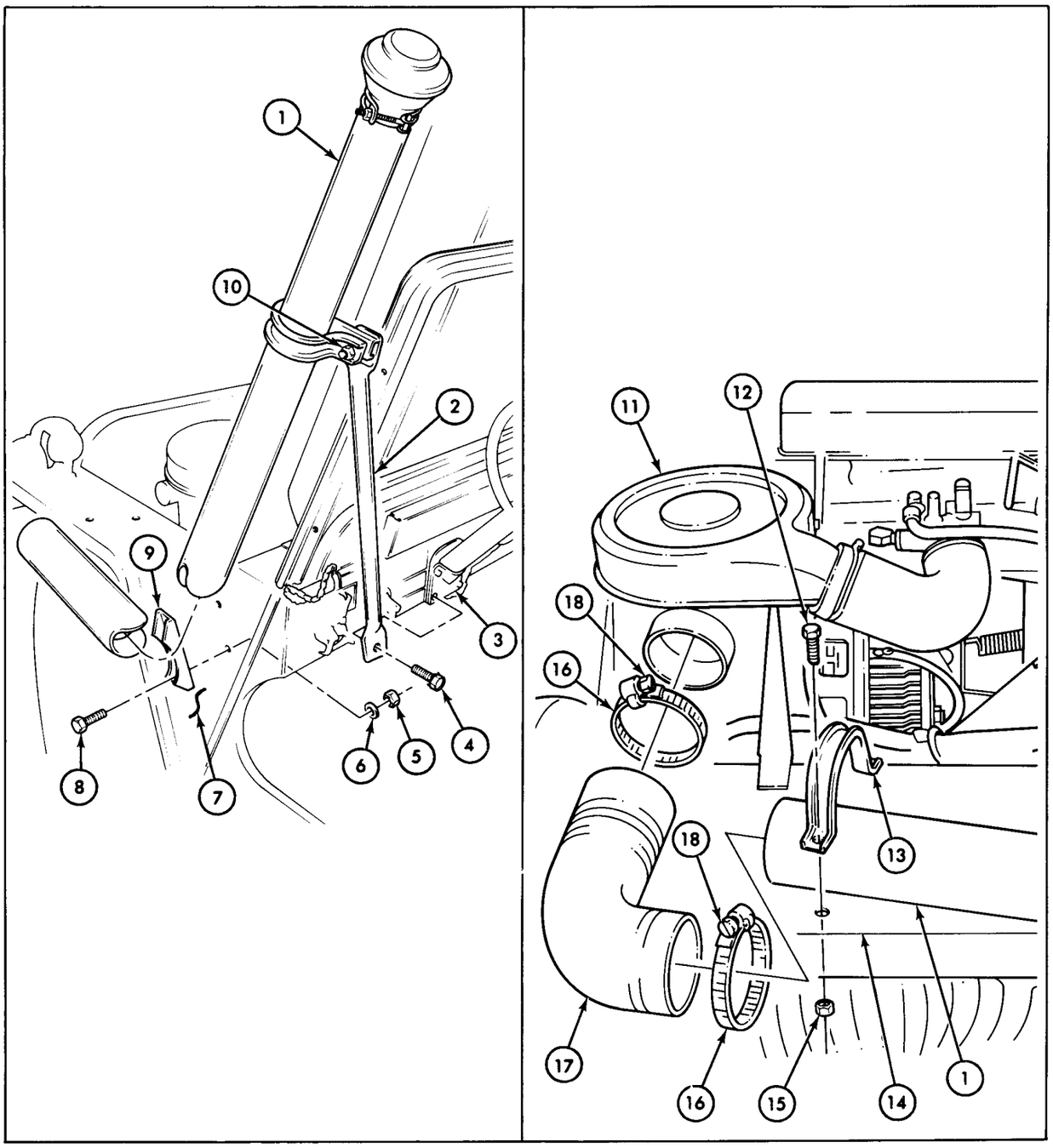

END OF TASK!

TA 156930

16-43. Exhaust Pipe Installation

This task covers:

a. Installation, M151A2 Vehicles *b. Installation, M718A1 Vehicles*

INITIAL SETUP:

Applicable Models	Equipment Condition Reference	Condition Description
M151A2, M718A1	TM 9-2320-218-10	Parking brake set.

Test Equipment
None

Special Tools
Torque wrench (0-175 lb-ft)

Special Environmental Conditions
None

Materials/Parts
None

Personnel Required
One mechanic

General Safety Instructions
None

Manual References
TM 9-2320-218-10
TM 9-2320-218-34P

STEP NO.	LOCATION	ITEM	ACTION	REMARKS
		a. INSTALLATION, M151A2 VEHICLES		
1.		Support assembly (1)	Secure on vehicle left corner panel (12) with eight bolts (13) and locknuts (14).	
2.		Lower vertical mounting clamp (8)	Attach on lower mounting bracket (9) with two bolts (11), flat washers (10), and locknuts (7).	Finger tighten only.
3.		Upper vertical mounting clamp (3)	Attach on upper mounting bracket (4) with two bolts (6), flat washers (5), and locknuts (2).	Finger tighten only.

16-43. Exhaust Pipe Installation (Cont'd)

STEP NO.	LOCATION	ITEM	ACTION	REMARKS

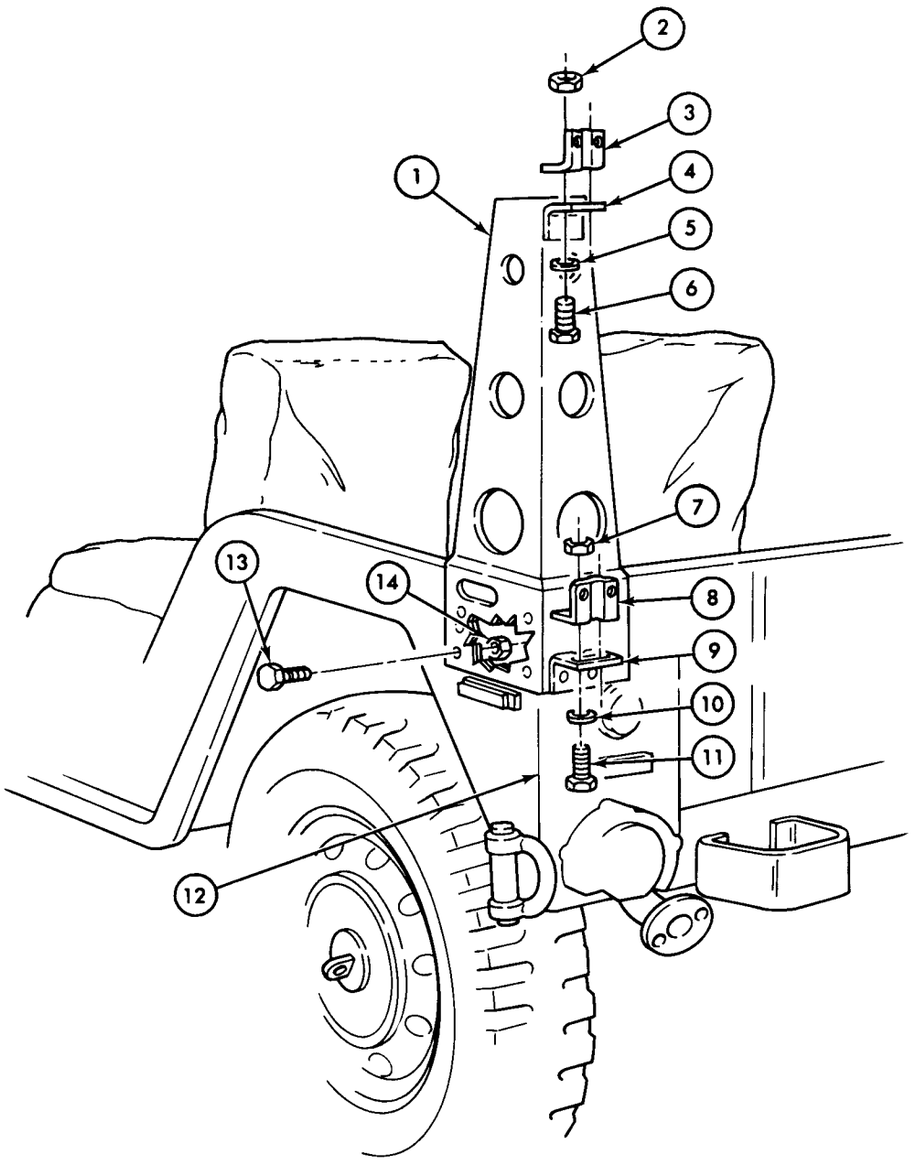

TA 156931

16-43. Exhaust Pipe Installation (Cont'd)

STEP NO.	LOCATION	ITEM	ACTION	REMARKS
4.		Guard assembly (15)	*a.* Slide over long end of exhaust pipe (4) and position about 5 in. (127 mm) above bend.	Opening in guard (15) should face same way as short portion of pipe (4).
			b. Attach on exhaust pipe (4) upper and lower ends with two U-bolts (14), clamps (13), four lockwashers (12), and four nuts (11).	Finger tighten only.
5.		Tailpipe (7)	*a.* Install on long end of exhaust pipe (4).	Position away from vehicle.
			b. Secure with U-bolt (6), clamp (8), two lockwashers (9), and two nuts (10).	
6.		Exhaust pipe (4) and guard (15) assembly	*a.* Position on two mounting clamps (3) and (22).	
			b. Attach with two U-bolts (5), four lockwashers (2), and four nuts (1).	Finger tighten only.
7.		Gasket (18) and exhaust pipe mating flange (17)	*a.* Aline with rear outlet pipe mating flange (19) holes.	
			b. Secure with two screws (16) and locknuts (20).	Tighten 12-15 lb-ft (16-20 N•m).

NOTE

Guard (15) must be positioned to clear top of tail light assembly (21).

8.		Exhaust pipe (4) and guard (15) assembly	*a.* Adjust position on mounting clamps (3) and (22), and tighten clamp nuts (11).	
			b. Tighten all U-bolt nuts.	

16-43. Exhaust Pipe Installation (Cont'd)

STEP NO.	LOCATION	ITEM	ACTION	REMARKS

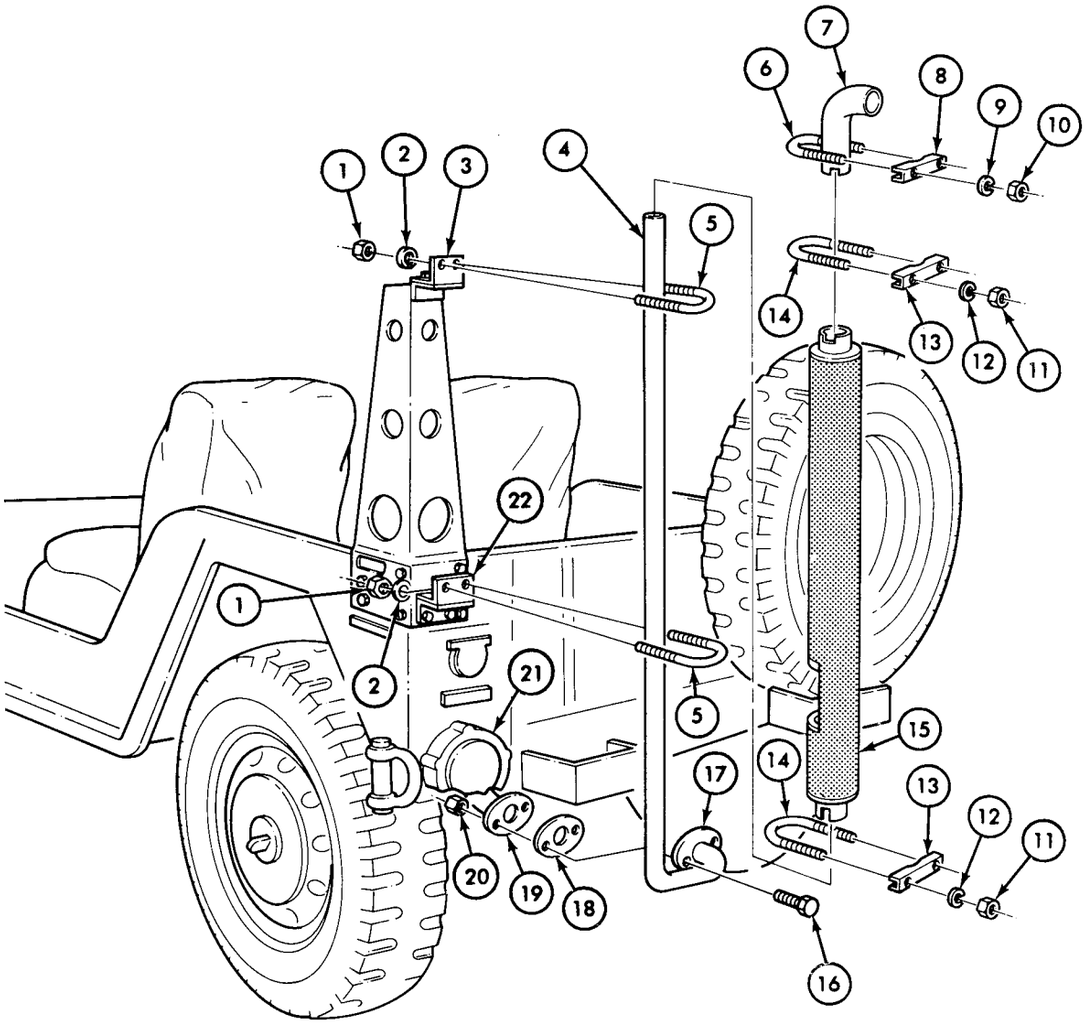

TA 156932

16-43. Exhaust Pipe Installation (Cont'd)

STEP NO.	LOCATION	ITEM	ACTION	REMARKS
b. INSTALLATION, M718A1 VEHICLES				
9.		Gasket (18) and tailpipe extension (16)	*a.* Aline mating flange (17) and gasket (18) with rear outlet pipe mating flange (19).	
			b. Secure with two screws (15) and locknuts (20).	Tighten 12-15 lb-ft (16-20 N•m).
10.		Tailpipe extension support (14)	Attach on ambulance extension flange (22) with two screws (13) and locknuts (21).	Finger tighten only.
11.		Guard assembly (11)	*a.* Slide over long end of exhaust pipe (12) and position about 5 in. (127 mm) above bend.	Opening in guard (11) should face same way as short portion of pipe (12).
			b. Attach upper and lower ends to exhaust pipe (12) with two U-bolts (7), clamps (10), four lock-washers (9), and four nuts (8).	Finger tighten only.
12.		Pipe support clamp (6)	Slide over long end of exhaust pipe (12).	
13.		Tailpipe (2)	*a.* Install on long end of exhaust pipe (12).	
			b. Secure with U-bolt (1), clamp (3), two lockwashers (4), and two nuts (5).	

16-43. Exhaust Pipe Installation (Cont'd)

STEP NO.	LOCATION	ITEM	ACTION	REMARKS

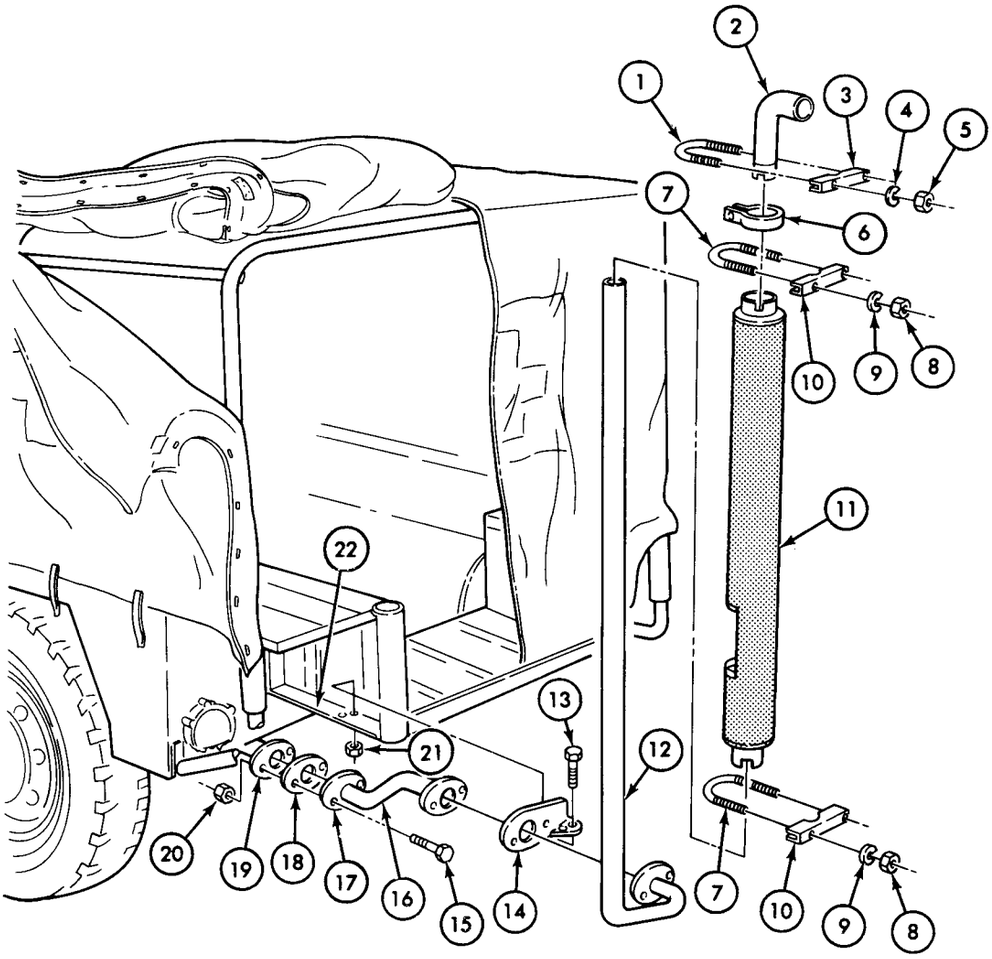

TA 156933

16-43. Exhaust Pipe Installation (Cont'd)

STEP NO.	LOCATION	ITEM	ACTION	REMARKS
14.		Top bow clamps (2) and link (4) assembly	Secure on rear top bow (21) with bolt (1), flat washer (5), and locknut (6).	Link (4) should face away from vehicle rear.
15.		Canvas top (3)	Slit at clamp (2) location and extend link (4) through slit.	
16.		Exhaust pipe and guard assembly (9)	Position on rear of vehicle and aline pipe support clamp (8) with top bow link (4).	
17.		Top bow link (4)	Attach to pipe support clamp (8) with bolt (20) and locknut (7).	Finger tighten only.
18.		Exhaust pipe (12) and two gaskets (14) and (19)	*a.* Position gasket (19) between tailpipe extension mating flange (17) and extension support bracket (15).	
			b. Aline exhaust pipe mating flange (12) and gasket (14) with support bracket (15), gasket (19), and extension pipe mating flange (17) holes.	
			c. Secure with two screws (13) and locknuts (16).	Tighten 12-15 lb-ft (16-20 N•m).
19.		Guard assembly (11)	*a.* Adjust to clear tail light assembly (18).	
			b. Tighten upper and lower U-bolt nuts (10).	
20.		Pipe support clamp (8) and link (4)	Tighten locknut (7).	
21.		Two tailpipe extension support bracket (15) locknuts	Tighten.	

16-43. Exhaust Pipe Installation (Cont'd)

STEP NO.	LOCATION	ITEM	ACTION	REMARKS

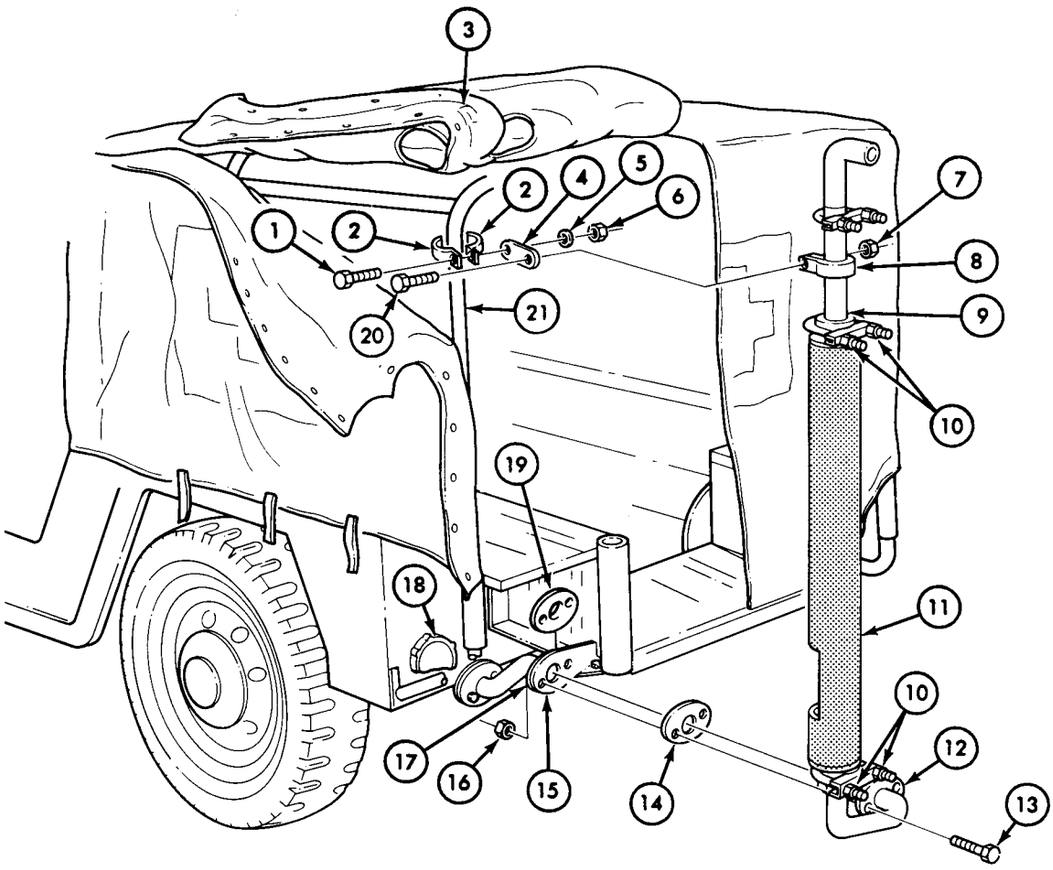

END OF TASK!

FOLLOW-ON TASK: Start engine (TM 9-2320-218-10) and check exhaust pipe connections for leaks.

TA 156934

16-44. Sealing System

This task covers:

Application

INITIAL SETUP:

Applicable Models	Equipment Condition Reference	Condition Description
M151A2, M718A1	TM 9-2320-218-10	Battery compartment cover removed.

Test Equipment
None

Special Tools
None

Special Environmental Conditions
None

Materials/Parts
Sealer, type II, (NSN 8030-00-159-8177)

Personnel Required
One mechanic

General Safety Instructions
None

Manual References
TM 9-2320-218-10

STEP NO.	LOCATION	ITEM	ACTION	REMARKS
APPLICATION				
1.	Battery ground cable (6) to right battery negative terminal clamp (4)	Ground cable terminal (3)	*a.* Remove nut (5) and bolt (2). *b.* Remove from clamp (4).	Cable removed to prevent accidental shorting.
2.		Sealer	Apply on three battery terminal clamps (1).	Do not apply sealer on battery negative terminal clamp (4) at this time.
3.		Battery ground cable terminal (3)	*a.* Position on battery negative terminal clamp (4). *b.* Secure with bolt (2) and nut (5).	
4.		Sealer	Apply on battery negative terminal clamp (4).	
5.		Starter motor assembly (7)	Apply sealer to terminal post (6).	

16-44. Sealing System (Cont'd)

STEP NO.	LOCATION	ITEM	ACTION	REMARKS

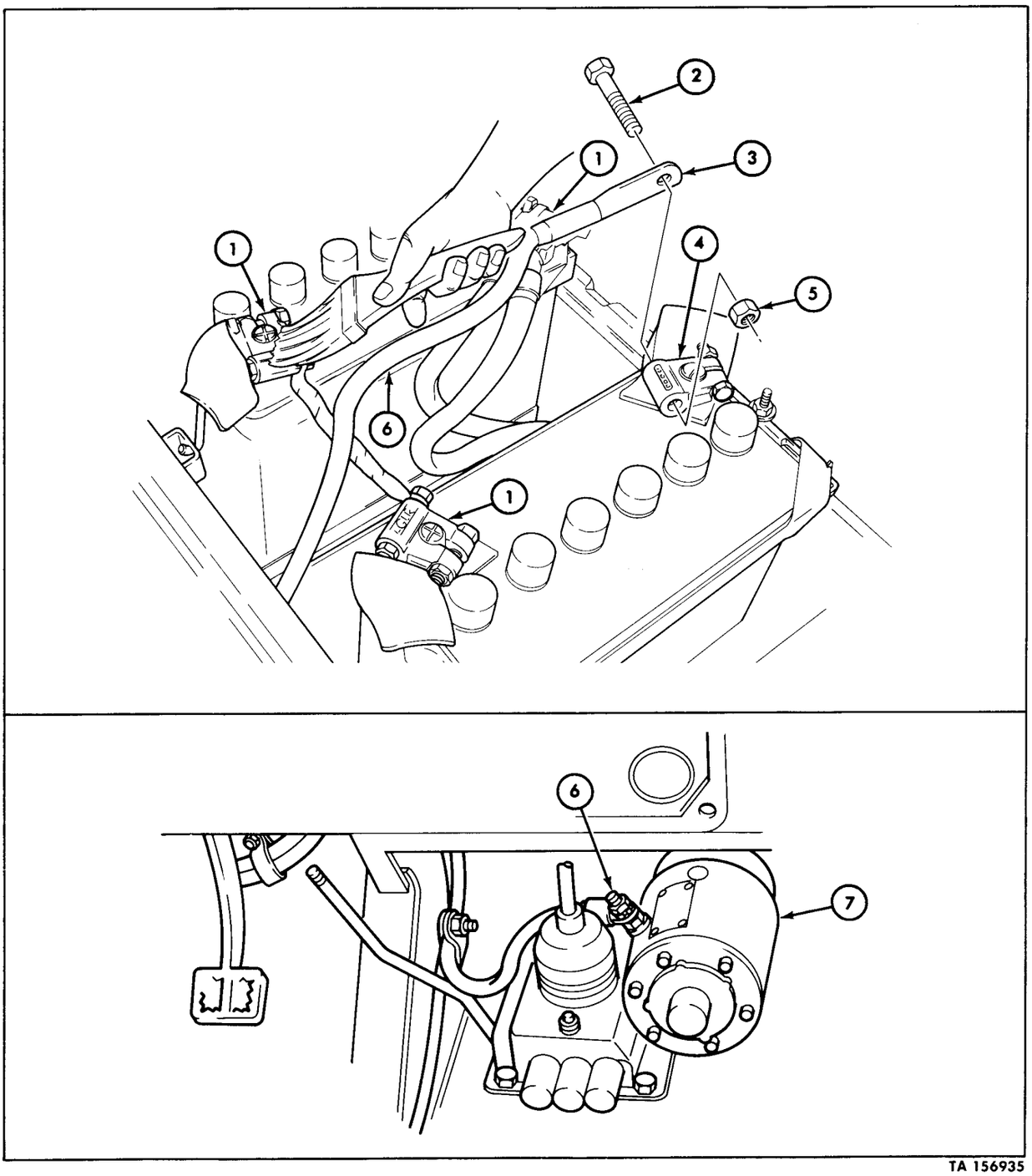

TA 156935

16-44. Sealing System (Cont'd)

STEP NO.	LOCATION	ITEM	ACTION	REMARKS
6.	Starting switch bracket and cover assembly (4) to firewall (3)	Four screws (1), lockwashers (6), and flat washers (5)	Remove.	
7.		Starting switch assembly (4)	*a.* Remove from firewall (3) and turn over to expose switch terminals (2).	
			b. Apply sealer to terminals (2).	
			c. Secure bracket and cover assembly (4) to firewall (3) with four flat washers (5), lockwashers (6), and screws (1).	

NOTE

Non-vented cap is used on vehicles with evaporative emission control system. No adjustment is necessary.

8.		Fuel tank filler cap (7)	*a.* Remove from fuel tank (9).	
			b. Turn valve (8) to closed position.	
			c. Reinstall.	

16-44. Sealing System (Cont'd)

STEP NO.	LOCATION	ITEM	ACTION	REMARKS

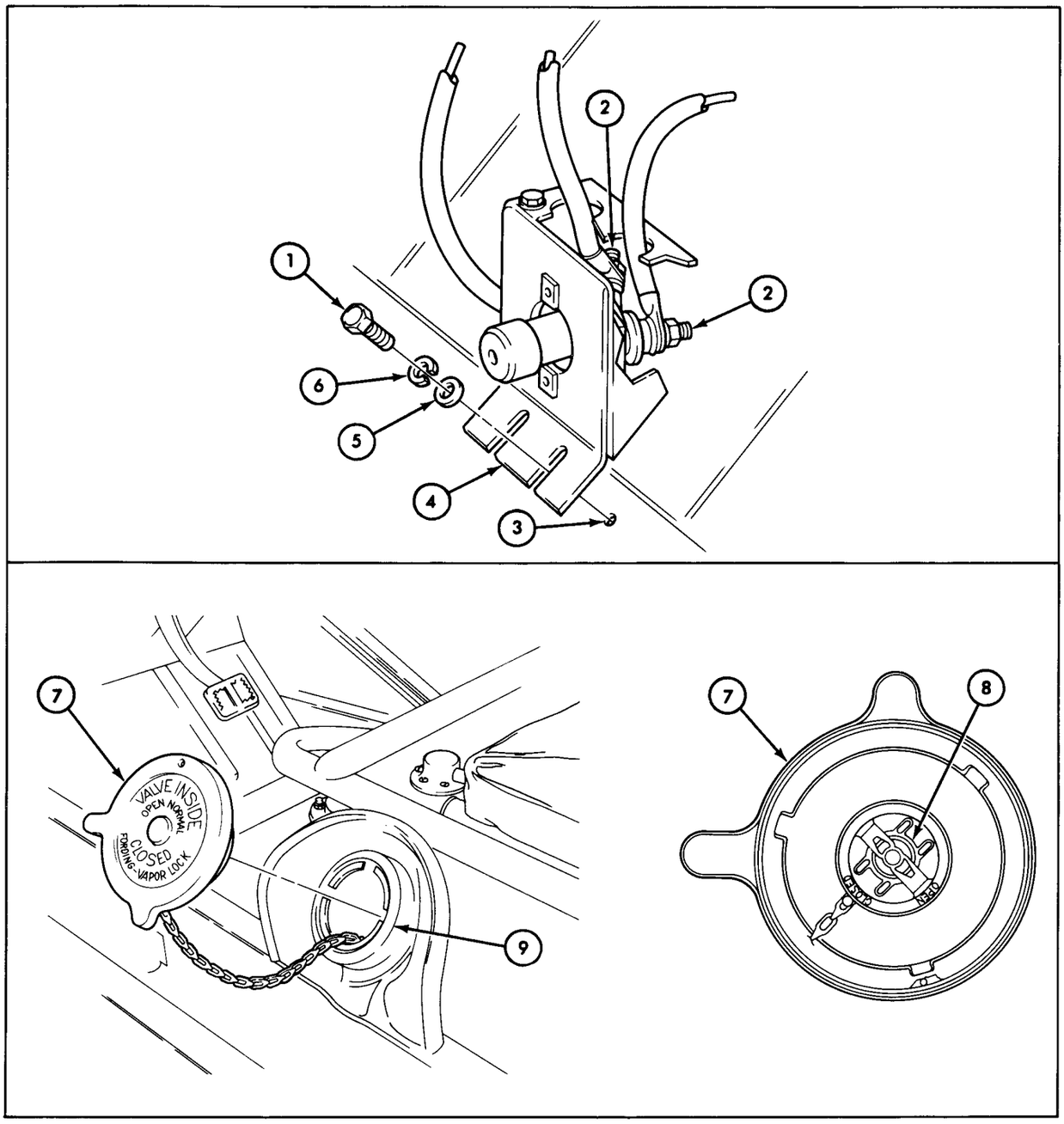

END OF TASK!

FOLLOW-ON TASK: Install battery compartment cover (TM 9-2320-218-10).

TA 156936

16-45. Fording Kit Operations Test

This task covers:

Testing

INITIAL SETUP:

Applicable Models	Equipment Condition Reference	Condition Description
M151A2, M718A1	TM 9-2320-218-10	Engine started.

Test Equipment
None

Special Tools
None

Special Environmental Conditions
None

Materials/Parts
None

Personnel Required
One mechanic

General Safety Instructions
None

Manual References
TM 9-2320-218-10
TM 9-2320-218-34P

STEP NO.	LOCATION	ITEM	ACTION	REMARKS
	TESTING			
		NOTE • Before fording, make sure pipe plug (2) is installed in flywheel housing cover (1) drain pipe. • Refer to TM 9-2320-218-10 for description of fording characteristics and operation procedure when vehicle is equipped with deepwater fording kit. Operating tests will ensure adequate performance.		
1.		Intake tube (5)	*a.* Loosen screw (7) and remove cap (3) and clamp (4).	
			b. Hold piece of sheet metal (6) over tube (5) opening.	Engine should start to stall.
2.		Flexible intake hose (8)	Check for suction leak at intake tube (5) connection.	Correct if leaks are found.

16-45. Fording Operation Test (Cont'd)

STEP NO.	LOCATION	ITEM	ACTION	REMARKS
3.		Cap (3) and clamp (4)	*a.* Install on intake tube (5). *b.* Tighten clamp screw (7).	

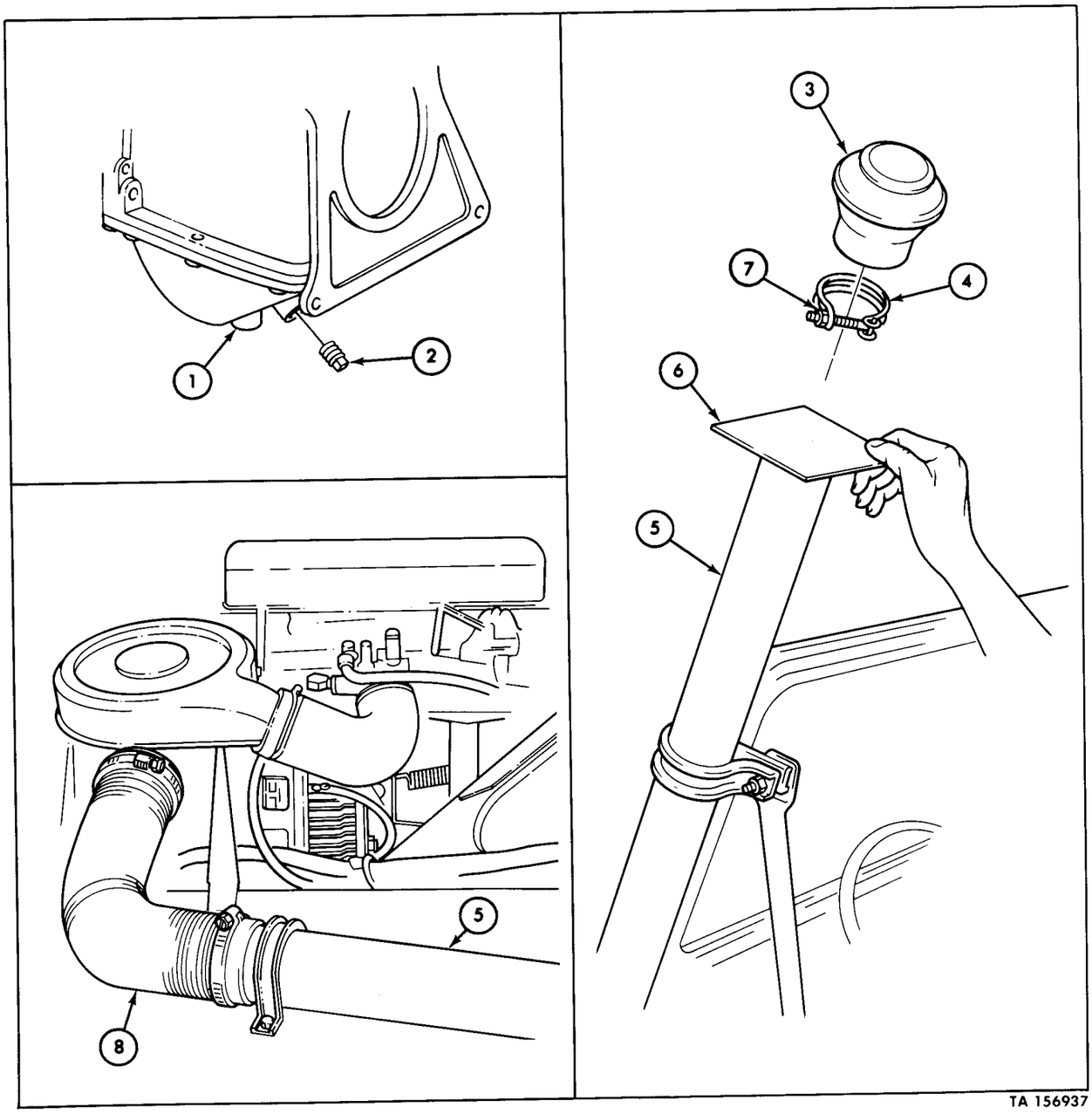

TA 156937

16-45. Fording Operation Test (Cont'd)

STEP NO.	LOCATION	ITEM	ACTION	REMARKS
4.		Exhaust pipe (2)	*a.* Cover outlet with piece of sheet metal (1).	Engine should start to stall.
			b. Check gasket for leaks at pipe (2) connection.	Correct if leaks are found.
5.	Fuel tank (5)	Fuel tank filler cap (3)	*a.* Remove.	
			b. Turn valve (4) to closed position.	
			c. Reinstall.	

NOTE

Non-vented cap (3) is used on vehicles with evaporative emission control system. No adjustment is necessary.

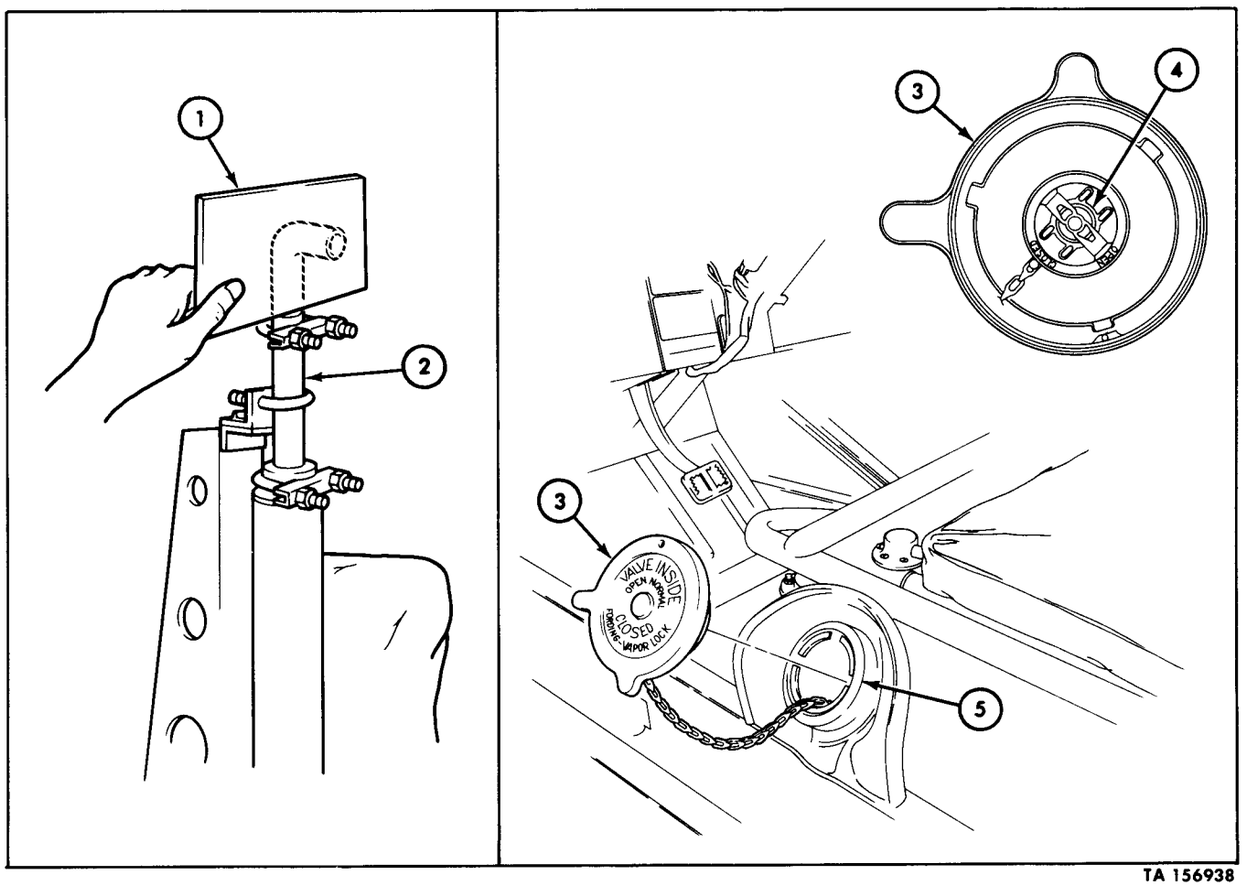

TA 156938

16-45. Fording Operation Test (Cont'd)

STEP NO.	LOCATION	ITEM	ACTION	REMARKS
6.	Dash panel (7)	Fording valve control handle (6)	*a.* Pull out to open. *b.* Push in to close.	Continue running engine to determine if venting system is operating.
7.	Fuel tank (5)	Fuel tank filler cap (3)	*a.* Remove. *b.* Turn valve (4) to open position. *c.* Reinstall.	

NOTE

When fording test is concluded, make sure pipe plug (10) is removed from flywheel cover drain pipe (8) and secured in storage boss (9).

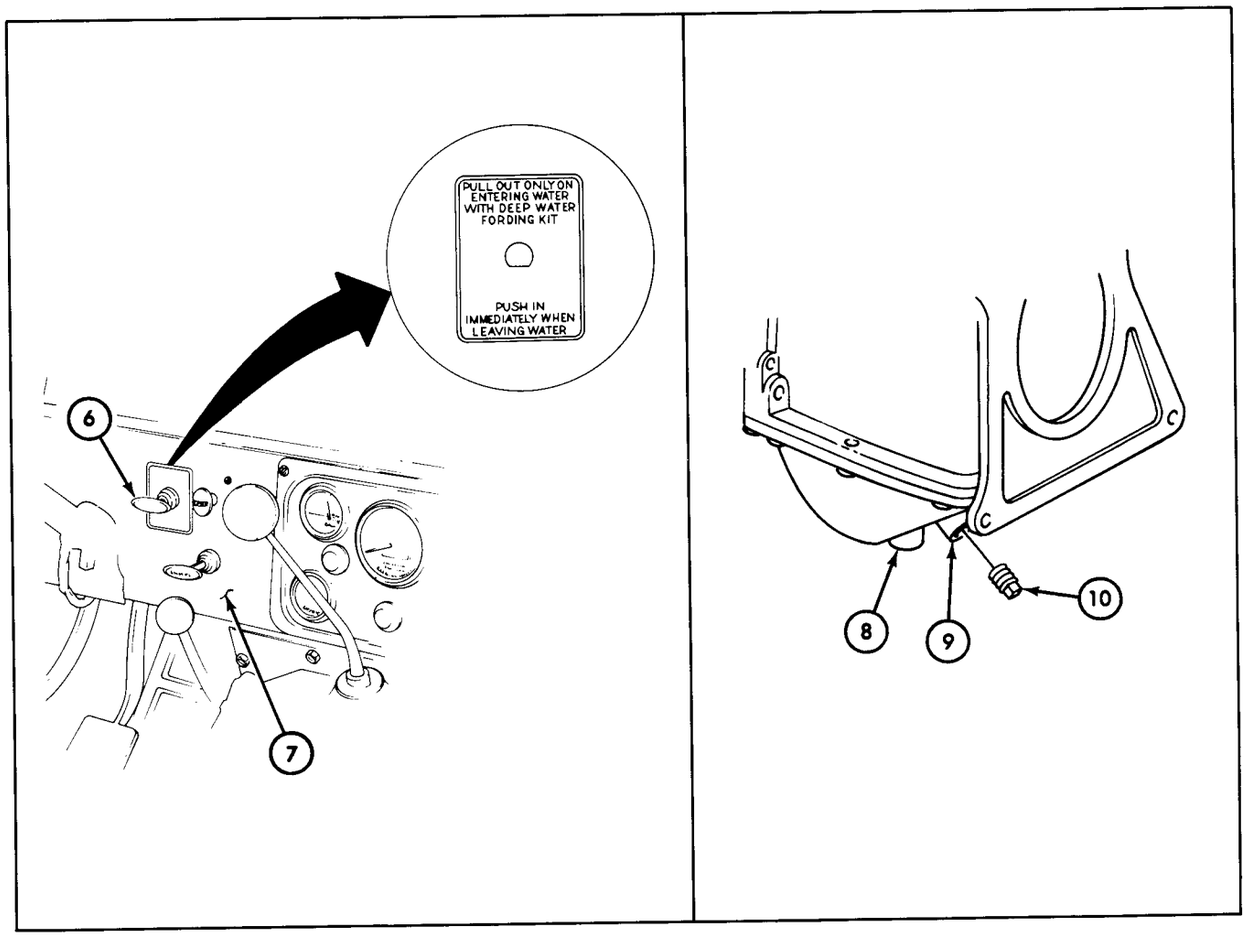

END OF TASK!

TA 156939

Section V. 100-AMPERE ALTERNATOR KIT MAINTENANCE

16-46. 100-Ampere Alternator Kit Installation and Maintenance

Preliminary operations, drilling instructions, installation of subassemblies, and installation of wiring harness cables are found in "Installation Instructions, 100-Ampere Alternator Kit (11660540)." These instructions are provisioned with each 100-ampere alternator kit. Troubleshooting, testing, and adjusting are found in TM 9-2320-218-20-1-1.

Section VI. 180-AMPERE ALTERNATOR KIT

16-47. 180-Ampere Alternator Kit

The 180-ampere alternator kit provides power to operate the 2.2 km Xenon searchlight. Complete information regarding this kit can be found in TM 9-2300-351-15-3.

Section VII. DOORS AND SIDE CURTAINS MAINTENANCE

16-48. Doors and Side Curtains Installation

Doors and side panels installation procedure is found in TM 9-2320-218-10.

16-49. Doors and Side Curtains Repair

Doors and side curtain panels repair procedure is found in paragraph 15-25.

Section VIII. M16/14 RIFLE MOUNT KIT INSTALLATION

16-50. General

This section provides installation procedures assigned to the direct and general support level for the M16/14 rifle mount kit used in soft top and hardtop vehicles. To find a specific installation procedure, see the installation task summary.

16-51. Description

The M16/14 rifle mount kit contains a reinforcement plate, bracket mounting catch assembly, catch, and a floor mounting support assembly. With kit installed, the vehicle provides a readily accessible location for storage of the M16/14 rifle.

16-52. M16/14 Rifle Mount Kit Installation Task Summary

16-53. Drilling Instructions

This task covers:

Location and Drilling of Mounting Holes

INITIAL SETUP:

Applicable Models	Equipment Condition Reference	Condition Description
M151A2, M825	TM 9-2320-218-20-1-1	Main light switch removed.

Test Equipment

None

Special Tools

C-clamp
Drill bits: 5/16, 7/32 in.

Special Environmental Conditions

None

Materials/Parts

None

Personnel Required

One mechanic

General Safety Instructions

None

Manual References

TM 9-2320-218-20-1-1
TM 9-2320-218-34P

STEP NO.	LOCATION	ITEM	ACTION	REMARKS
	LOCATION AND DRILLING OF MOUNTING HOLES			
		NOTE Step 1 applies to vehicles equipped with hardtop kit.		
1.			Drill two 5/16 in. (7.94 mm) left side catch mounting bracket holes as follows: *a.* Position reinforcement panel (2) on dash panel (1) and aline with light switch mounting holes (5). *b.* Secure in place with C-clamp (4).	

16-53. Drilling Instructions (Cont'd)

STEP NO.	LOCATION	ITEM	ACTION	REMARKS
			c. Use reinforcement panel (2) as template and mark two hole locations (3).	
			d. Remove C-clamp (4) and reinforcement panel (2) from dash panel (1).	
			e. Drill two holes.	

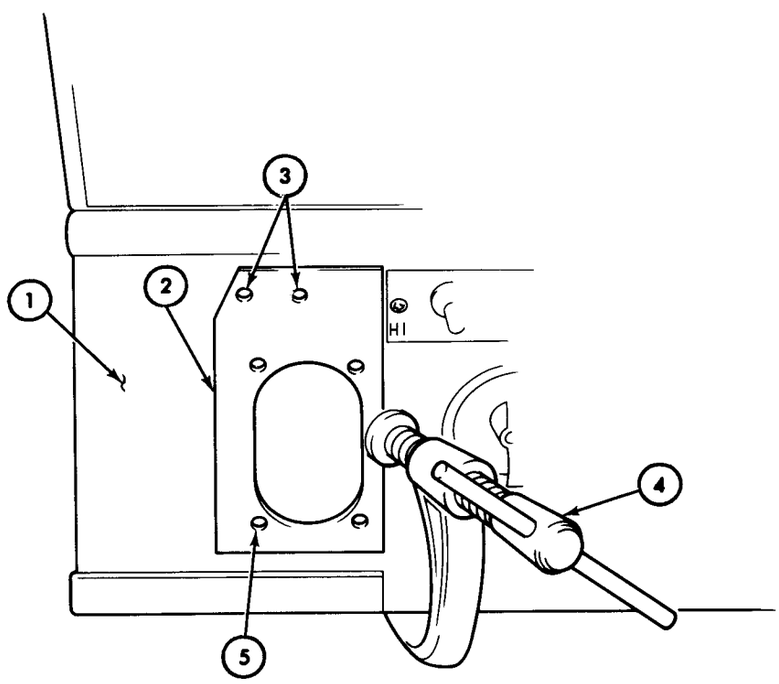

TA 156940

16-53. Drilling Instructions (Cont'd)

STEP NO.	LOCATION	ITEM	ACTION	REMARKS
		NOTE Step 2 applies to vehicles equipped with canvas top.		
2.			Drill two left side 5/16 in. (7.94 mm) catch mounting bracket holes as follows: *a.* Position reinforcement panel (5) on dash panel (1) and aline with light switch mounting holes (7). *b.* Secure in place with C-clamp (6). *c.* Use reinforcement panel (5) for a template and mark left top hole A (3) location. *d.* Release C-clamp (6) and move reinforcement panel (5) left. *e.* Position right top panel hole (4) over marked location A (3) and use for a template to mark left top hole B (2) location. *f.* Remove reinforcement panel (5) and drill two holes.	

16-53. Drilling Instructions (Cont'd)

STEP NO.	LOCATION	ITEM	ACTION	REMARKS

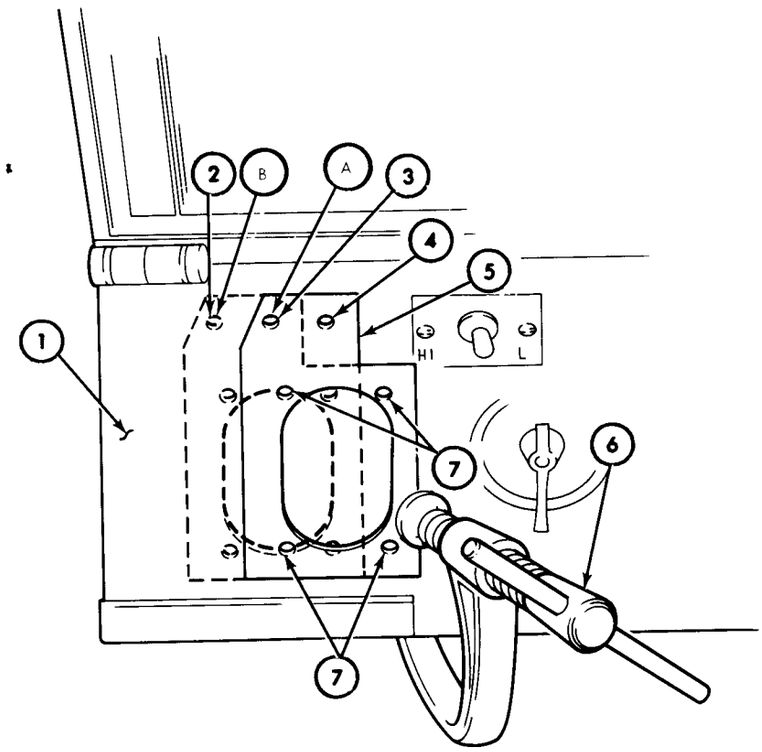

TA 156941

16-53. Drilling Instructions (Cont'd)

STEP NO.	LOCATION	ITEM	ACTION	REMARKS
3.			Drill two 5/16 in. (7.94 mm) and four 7/32 in. (5.56 mm) right reinforcement panel (2) holes as follows: *a.* Measure 3-1/4 in. (82.55 mm) left from dash panel right edge (5) and 1-1/16 in. (26.99 mm) down from dash panel top edge (1). *b.* Mark location. *c.* Position reinforcement panel (2) to dash panel (6) and aline right upper panel hole (4) with marked location. *d.* Secure in place with C-clamp (7). *e.* Use reinforcement panel (2) as a template and mark upper left hole (3) and four lower hole (8) locations. *f.* Remove C-clamp (7) and reinforcement panel (2) from dash panel (6). *g.* Drill two upper 5/16 in. (7.94 mm) holes (3) and (4) and four lower 7/32 in. (5.56 mm) holes (8).	

53. Drilling Instructions (Cont'd)

STEP NO.	LOCATION	ITEM	ACTION	REMARKS

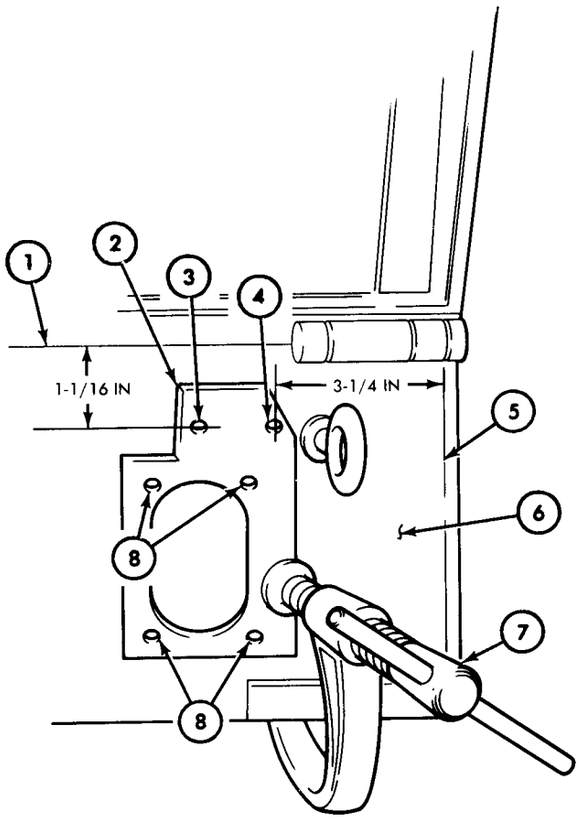

TA 156942

16-53. Drilling Instructions (Cont'd)

STEP NO.	LOCATION	ITEM	ACTION	REMARKS
4.			Drill two 5/16 in. (7.94 mm) left side floor bracket (6) mounting holes as follows: *a.* Measure 3-13/16 in. (96.84 mm) right from left side panel (1), and 5-1/2 in. (139.70 mm) forward from seat bulkhead panel (4). *b.* Mark location on floor panel (3). *c.* Position left mounting bracket (6) on floor panel (3) and aline rear hole with marked location (5). *d.* Use mounting bracket (6) as a template and mark forward hole location (2). *e.* Remove bracket (6) and drill two holes.	

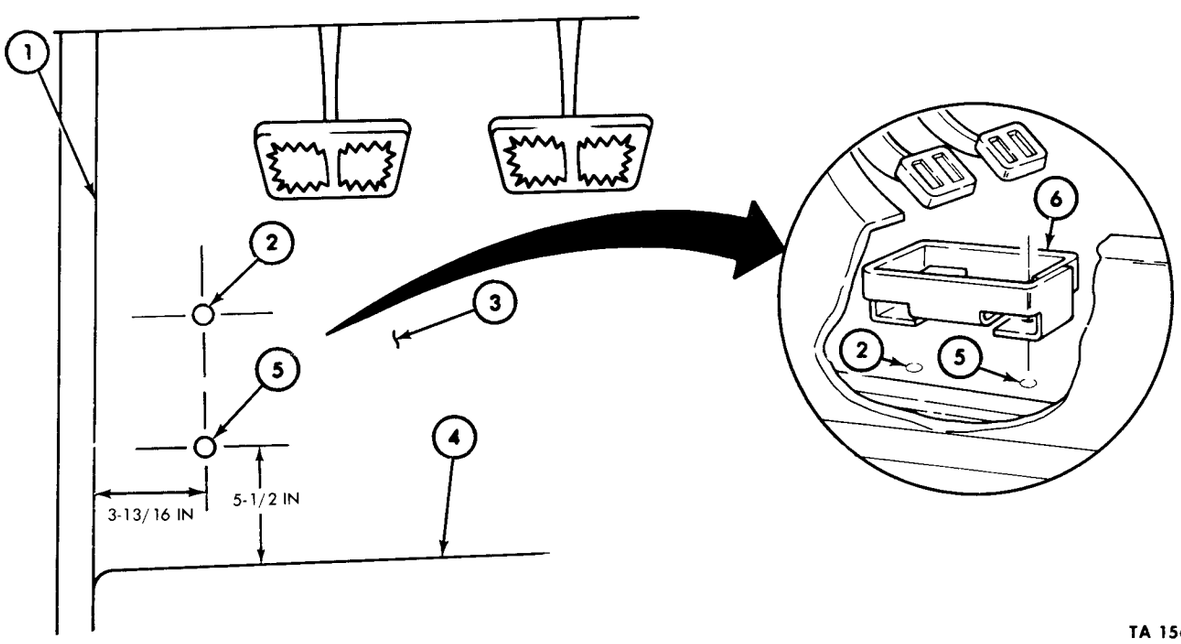

TA 156943

16-53. Drilling Instructions (Cont'd)

STEP NO.	LOCATION	ITEM	ACTION	REMARKS
5.			Drill two 5/16 in. (7.94 mm) right side floor bracket (10) mounting holes as follows: *a.* Measure 3-13/16 in. (96.84 mm) left from right side panel (8), and 5-1/2 in. (139.70 mm) forward from seat bulkhead panel (4). *b.* Mark location on floor panel (3). *c.* Position right mounting bracket (10) on floor panel (3) and aline rear hole with marked location (9). *d.* Use mounting bracket (10) as a template and mark forward hole location (7). *e.* Remove bracket (10) and drill two holes.	

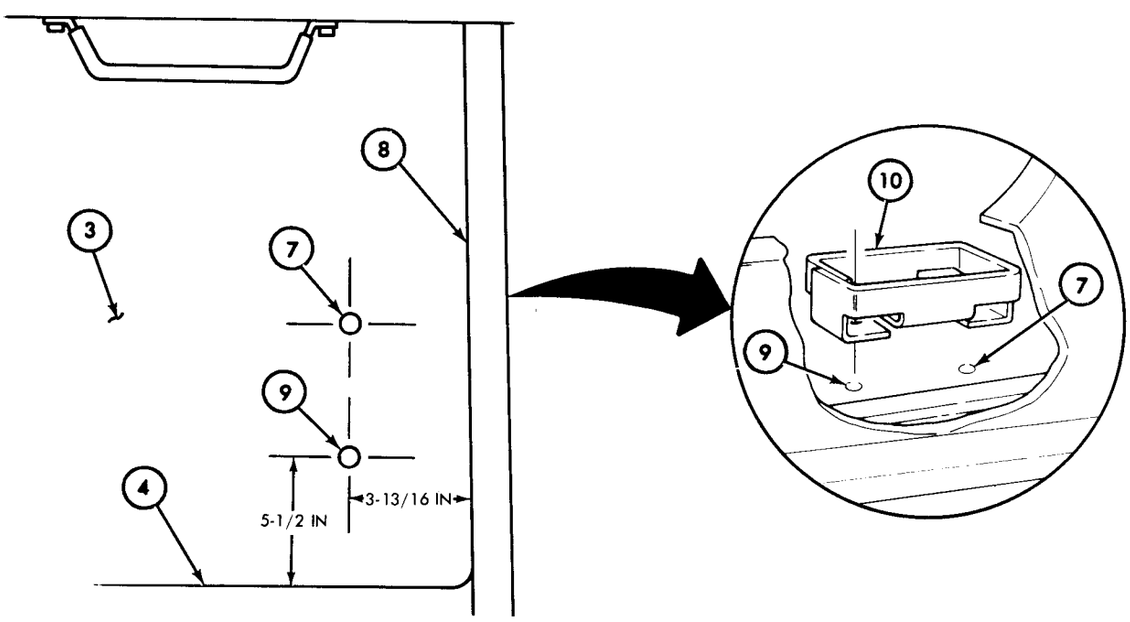

END OF TASK!

TA 156944

16-54. Rifle Mounting Catch (Left Side)

This task covers:

a. Installation, Hardtop and Non-Hardtop Vehicles *b. Installation, Soft Top Vehicles*

INITIAL SETUP:

Applicable Models	Equipment Condition Reference	Condition Description
M151A2, M825	TM 9-2320-218-10	Parking brake set.

Test Equipment
None

Special Tools
None

Special Environmental Conditions
None

Materials/Parts
None

Personnel Required
One mechanic

General Safety Instructions
None

Manual References
TM 9-2320-218-10
TM 9-2320-218-34P

STEP NO.	LOCATION	ITEM	ACTION	REMARKS
a. INSTALLATION, HARDTOP AND NON-HARDTOP VEHICLES				
1.		Reinforcement panel (9)	Position on left back side of dash panel (3), with beveled corner to upper left, and aline holes.	
2.		Screw (12) and lockwasher (13)	Insert through upper left light switch mounting hole in front of dash panel (3) and upper left hole in reinforcement panel (9).	
3.		Sleeve spacer (8)	Slide on screw (12) and hold in place.	
4.		Main light switch (4)	*a.* Place through hole from back side of dash panel (3) and start screw (12) into switch (4).	

16-54. Rifle Mounting Catch (Left Side) (Cont'd)

STEP NO.	LOCATION	ITEM	ACTION	REMARKS
			b. Install three remaining screws (12), lockwashers (13), and sleeve spacers (8).	
			c. Tighten four screws (12).	
5.		Upper light switch lever (5)	Secure on main light switch (4) with lockwasher (6) and screw (7).	
6.		Catch bracket spacer (1), catch bracket (15), and catch assembly (14)	Secure on upper left dash panel (3) with two screws (10), lockwashers (11), and nuts (2).	

b. INSTALLATION, SOFT TOP VEHICLES

Installation procedure for left side rifle mounting catch on soft top vehicles is the same as for hardtop vehicles with the exception that mounting catch is installed at a position farther left on dash panel.

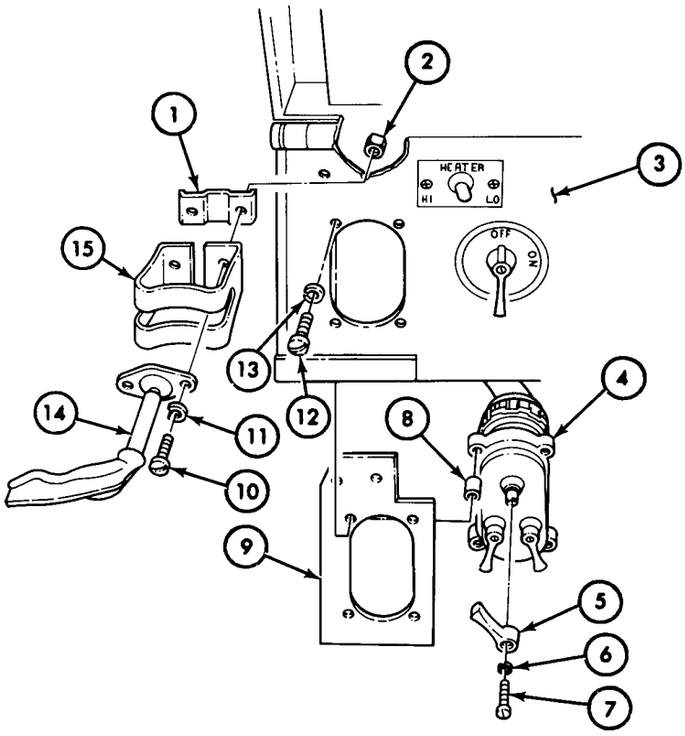

END OF TASK!

TA 156945

16-55. Rifle Mounting Catch (Right Side)

This task covers:

Installation

INITIAL SETUP:

Applicable Models
M151A2, M825

Equipment Condition Reference
TM 9-2320-218-10

Condition Description
Parking brake set.

Test Equipment
None

Special Tools
None

Special Environmental Conditions
None

Materials/Parts
None

Personnel Required
One mechanic

General Safety Instructions
None

Manual References
TM 9-2320-218-10
TM 9-2320-218-34P

STEP NO.	LOCATION	ITEM	ACTION	REMARKS
INSTALLATION				
1.		Reinforcement panel (10)	*a.* Position on back side of right dash panel (1), with beveled corner to upper right. *b.* Aline holes. *c.* Secure with four screws (7), lockwashers (8), and nuts (9).	
2.		Catch bracket spacer (2), catch bracket (3), and catch assembly (4)	Secure on upper right dash panel (1) with two screws (5), lockwashers (6), and nuts (11).	

16-55. Rifle Mounting Catch (Right Side) (Cont'd)				
STEP NO.	LOCATION	ITEM	ACTION	REMARKS

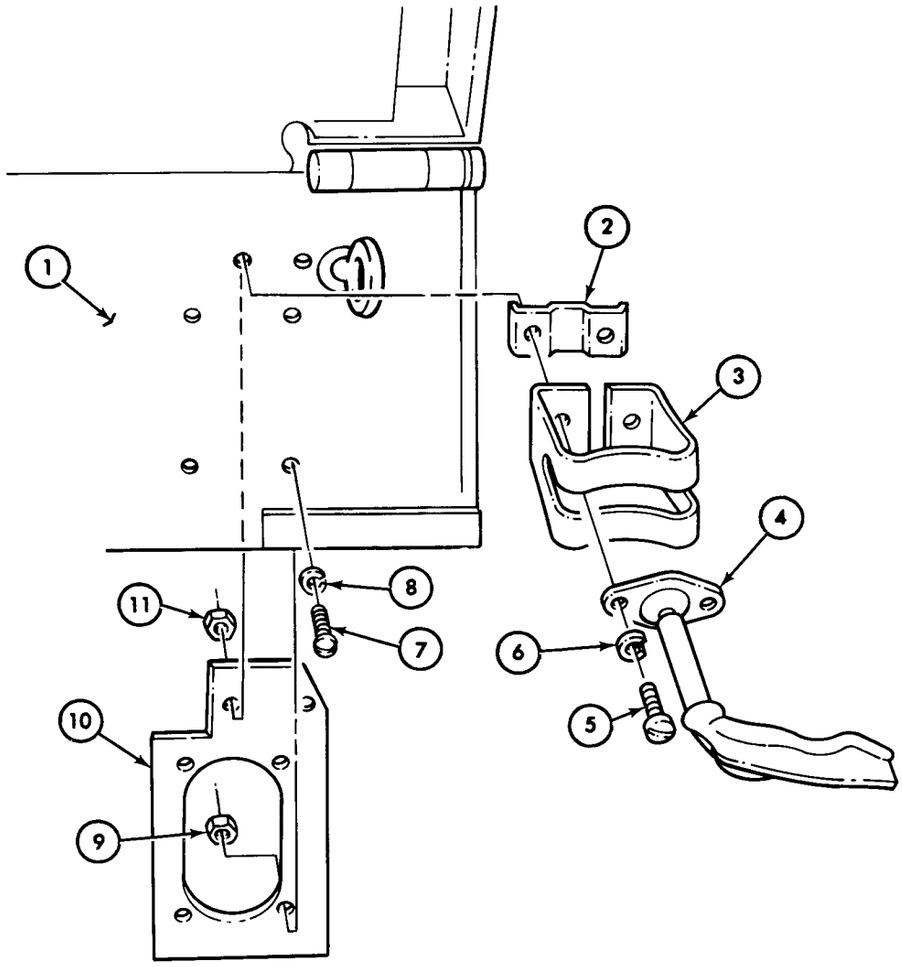

END OF TASK!

TA 156946

16-56. Rifle Mounting Floor Bracket (Left Side)

This task covers:

Installation

INITIAL SETUP:

Applicable Models
M151A2, M825

Equipment Condition Reference
TM 9-2320-218-10

Condition Description
Parking brake set.

Test Equipment
None

Special Tools
Torque wrench (0-175 lb-ft)

Special Environmental Conditions
None

Materials/Parts
None

Personnel Required
One mechanic

General Safety Instructions
None

Manual References
TM 9-2320-218-10
TM 9-2320-218-34P

STEP NO.	LOCATION	ITEM	ACTION	REMARKS
INSTALLATION				
1.		Rifle mounting floor bracket (1)	Secure on left floor panel (5) with two capscrews (2), lockwashers (3), and nuts (4).	Tighten 6-7 lb-ft (8-10 N•m).

16-56. Rifle Mounting Floor Bracket (Left Side) (Cont'd)				
STEP NO.	LOCATION	ITEM	ACTION	REMARKS

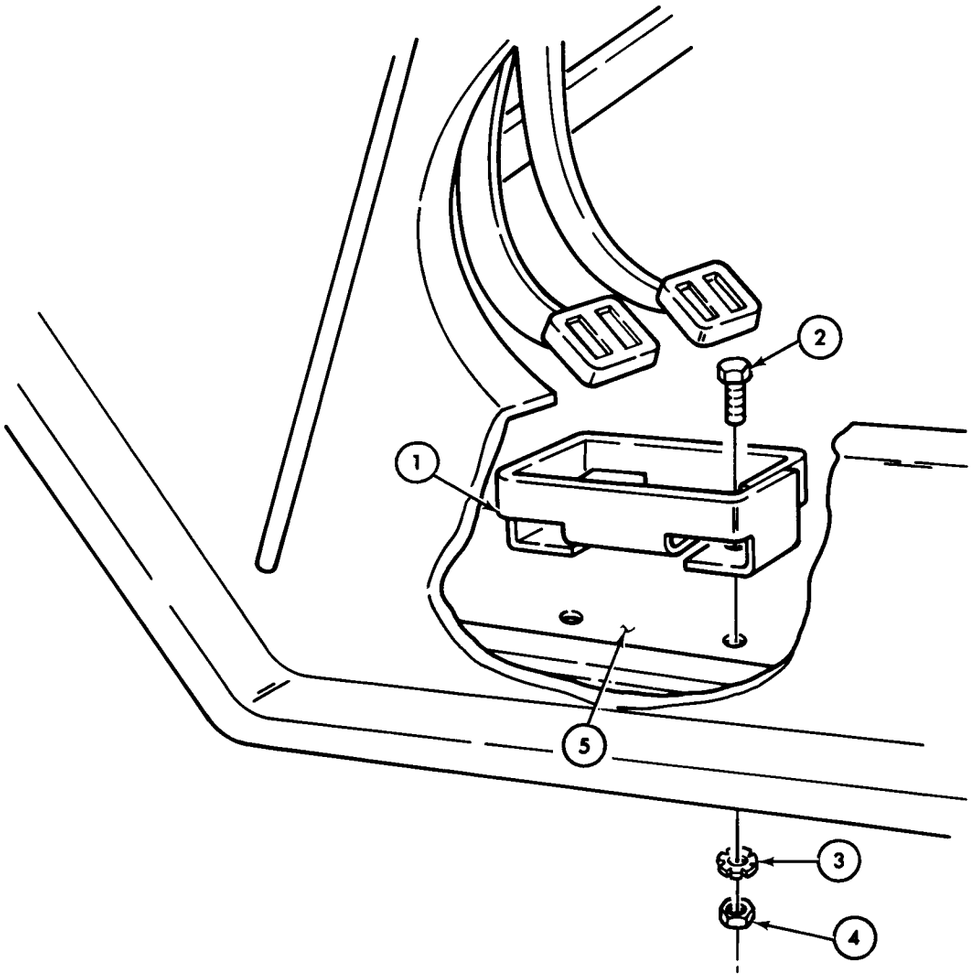

END OF TASK!

TA 156947

16-57. Rifle Mounting Floor Bracket (Right Side)

This task covers:

Installation

INITIAL SETUP:

Applicable Models
M151A2, M825

Equipment Condition Reference
TM 9-2320-218-10

Condition Description
Parking brake set.

Test Equipment
None

Special Tools
Torque wrench (0-175 lb-ft)

Special Environmental Conditions
None

Materials/Parts
None

Personnel Required
One mechanic

General Safety Instructions
None

Manual References
TM 9-2320-218-10
TM 9-2320-218-34P

STEP NO.	LOCATION	ITEM	ACTION	REMARKS
INSTALLATION				
1.		Rifle mounting floor bracket (2)	Secure on right floor panel (3) with two cap-screws (1), lockwashers (5), and nuts (4).	Tighten 6-7 lb-ft (8-10 N•m).

16-57. Rifle Mounting Floor Bracket (Right Side) (Cont'd)

STEP NO.	LOCATION	ITEM	ACTION	REMARKS

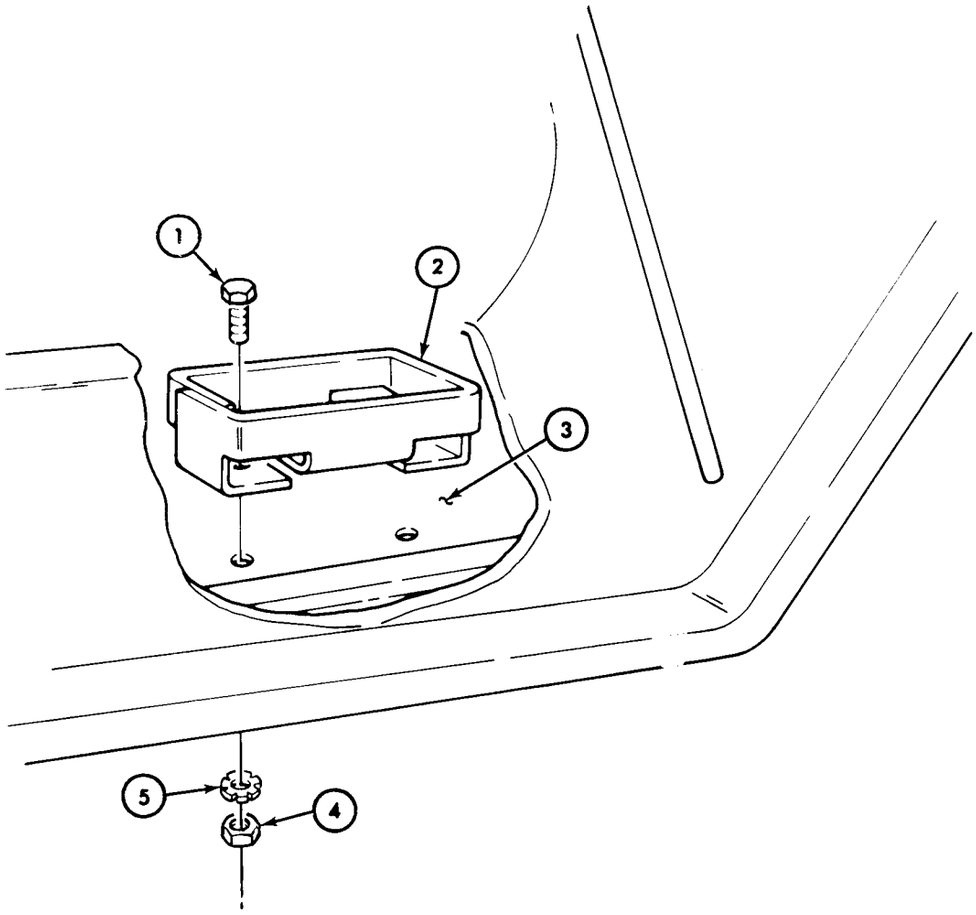

END OF TASK!

TA 156948

Section IX. M4 GUN MOUNT PEDESTAL KIT

16-58. General

This section provides maintenance procedures assigned to the direct and general support level for the M4 gun mount pedestal kit. To find a specific maintenance procedure, see the maintenance task summary.

16-59. Preventive Maintenance

Preventive maintenance instructions for the M4 gun mount pedestal can be found in TM 9-1000-205-12 and TM 9-2320-218-20-1-1.

16-60. Troubleshooting

Troubleshooting instructions for the M4 gun mount pedestal can be found in TM 9-1000-205-12.

16-61. M4 Gun Mount Pedestal Kit Task Summary

TASK PARA	PROCEDURES	PAGE NO.
16-62.	M4 Gun Mount Pedestal Kit Installation a. Assembly b. Drilling Instructions c. Installation d. Lubrication	16-180

16-62. M4 Gun Mount Pedestal Kit Installation

This task covers:

a. Assembly
b. Drilling Instructions
c. Installation
d. Lubrication

INITIAL SETUP:

Applicable Models
M151A2

Test Equipment
None

Special Tools
Torque wrench (0-175 lb-ft)
Drill bit, 15/32 in.

Materials/Parts
None

Personnel Required
One mechanic

Manual References
TM 9-2320-218-10
TM 9-2320-218-20-1-2
TM 9-1000-205-12

Equipment Condition Reference	Condition Description
TM 9-2320-218-10	Parking brake set.
TM 9-2320-218-20-1-2	Canvas top assembly removed.
TM 9-2320-218-20-1-2	Front seats removed.
TM 9-2320-218-20-1-2	Rear seats removed.

Special Environmental Conditions
None

General Safety Instructions
None

STEP NO.	LOCATION	ITEM	ACTION	REMARKS
a. ASSEMBLY				
1.		Two mounting braces (6)	*a.* Position on pedestal mounting bracket (3) and aline holes.	
			b. Secure with two screws (1), lock-washers (4), and nuts (5).	Tighten 55-65 lb-ft (75-88 N•m).
2.		Gun mount pedestal (2)	*a.* Position on pedestal mounting base brackets (8).	
			b. Secure with four screws (7), flat washers (9), lock-washers (10), and nuts (11).	Tighten 55-65 lb-ft (75-88 N•m).

16-62. Gun Mount Pedestal Kit Installation (Cont'd)

STEP NO.	LOCATION	ITEM	ACTION	REMARKS

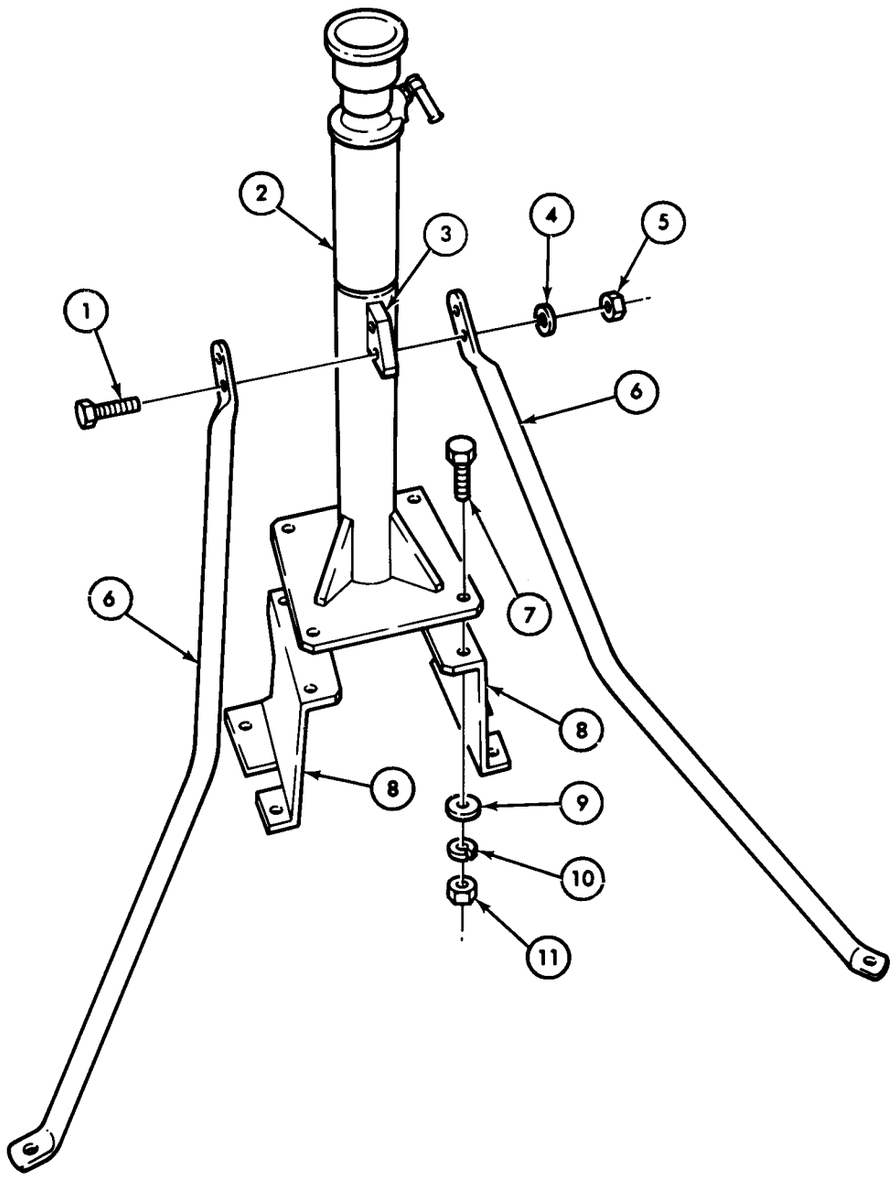

TA 156949

16-62. Gun Mount Pedestal Kit Installation (Cont'd)

STEP NO.	LOCATION	ITEM	ACTION	REMARKS
b. DRILLING INSTRUCTIONS				
3.			Drill six 15/32 in. (11.90 mm) gun mount pedestal holes as follows: *a.* Locate two 1/8 in. (3.18 mm) pilot holes (2) in rear floor panel (3). *b.* Drill two 15/32 in. (11.90 mm) at these locations. *c.* Locate four 1/8 in. (3.18 mm) pilot holes (1) in tunnel floor (4). *d.* Drill four 15/32 in. (11.90 mm) holes at these locations.	

16-62. Gun Mount Pedestal Kit Installation (Cont'd)

STEP NO.	LOCATION	ITEM	ACTION	REMARKS

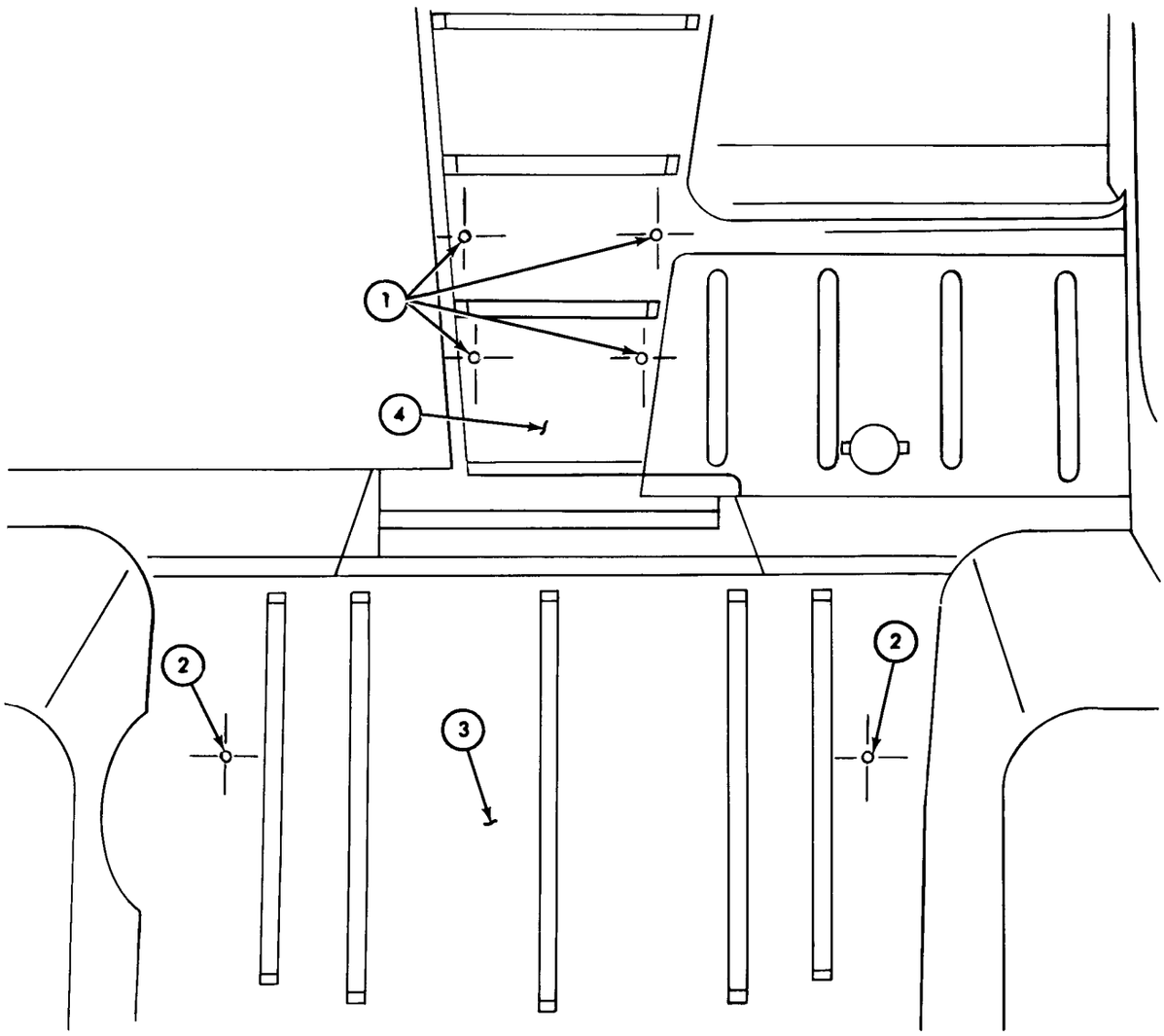

TA 156950

16-62. Gun Mount Pedestal Kit Installation (Cont'd)

STEP NO.	LOCATION	ITEM	ACTION	REMARKS
c. INSTALLATION				
4.		Two screws (10), lockwashers (9), and nuts (6)	*a.* Place lockwashers (9) on screws (10).	
			b. Insert screws (10) through floor panel mounting brace holes (7) from floor panel (8) underside.	
			c. Secure with nuts (6).	Tighten 60-65 lb-ft (81-88 N•m).
5.		Gun mount pedestal assembly (1)	*a.* Position on floor panel (8) and aline mounting brace (5) holes with screw studs (10).	
			b. Install two flat washers (4), lockwashers (3), and nuts (2).	Tighten 55-60 lb-ft (75-81 N•m).
			c. Position pedestal mounting base brackets (14) on tunnel floor (13) and aline holes.	
			d. Secure with four screws (15), lockwashers (12), and nuts (11).	Tighten 55-65 lb-ft (75-88 N•m).

d. LUBRICATION

NOTE

Lubrication instructions for the M4 gun mount pedestal can be found in TM 9-1000-205-12.

16-62. Gun Mount Pedestal Kit Installation (Cont'd)

STEP NO.	LOCATION	ITEM	ACTION	REMARKS

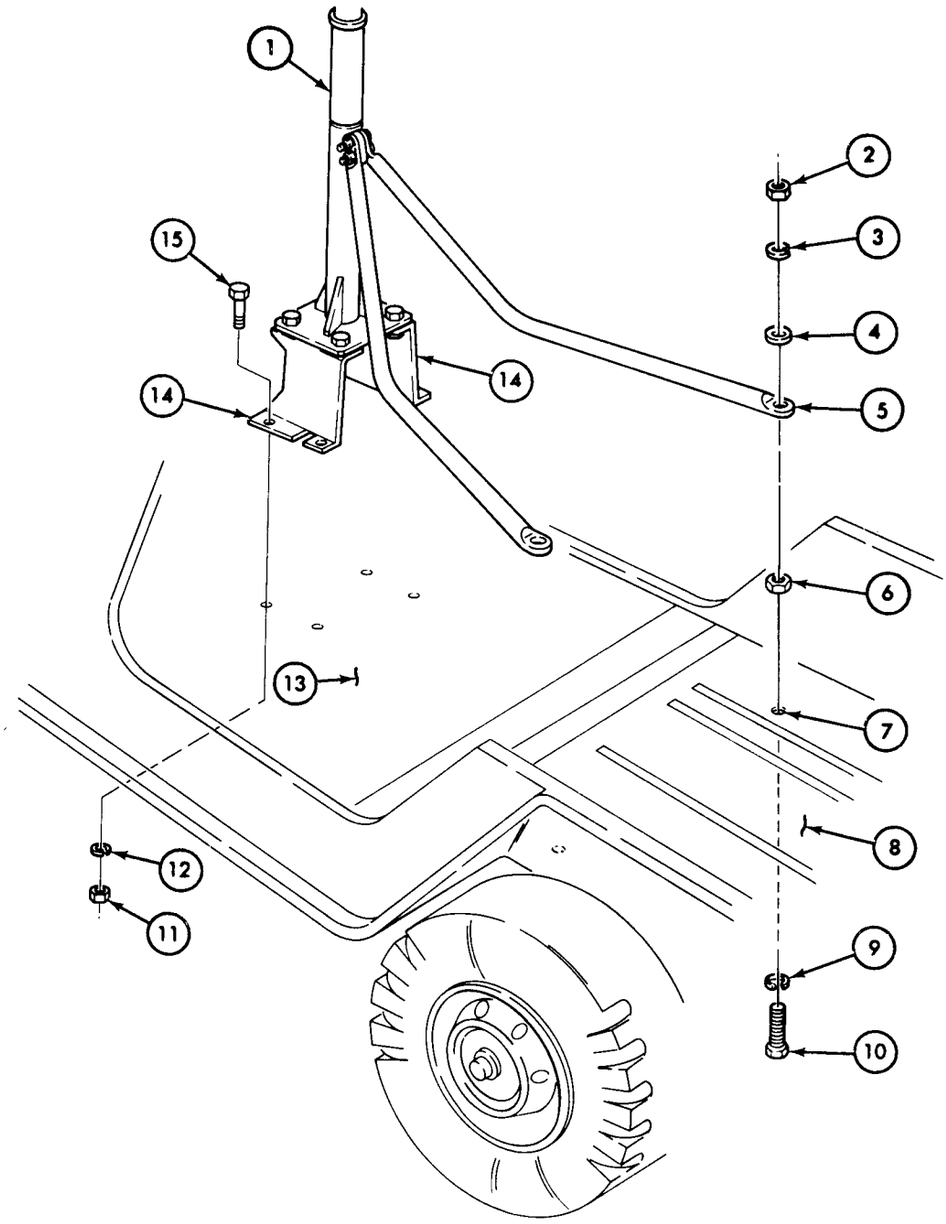

END OF TASK!

FOLLOW-ON TASK: Install front seats (TM 9-2320-218-20-1-2).

TA 156951

APPENDIX A

REFERENCES

A-1. Indexes

The following indexes should be consulted frequently for latest changes to or revisions of references given in this appendix and for new publications or instructions relating to material covered in this manual.

a. Military Publication Indexes.

Index of Army Motion Pictures and Related Audio-Visual Aids ..... DA Pam 108-1
Index of Administrative Publications ..... DA Pam 310-1
Index of Blank Forms ..... DA Pam 310-2
Index of Technical Manuals, Supply Manuals, (type 7, 8,and 9), Technical Bulletins, Supply Bulletins, and Lubrication Orders ..... DA Pam 310-4
Index of Doctrinal, Training, and Organization Publications ..... DA Pam 310-3

b. General References.

Authorized Abbreviations and Brevity Codes ..... AR 310-50
Dictionary of United States Army Terms ..... AR 310-25
Military Symbols ..... FM 21-30
How to Prepare and Conduct Military Training ..... FM 21-6

A-2. Supply Manuals

The following Department of the Army Supply Manuals pertain to this material:

a. Demolition of Materiel to Prevent Enemy Use.

Explosives, Bulk, Propellants, and Explosive Devices ..... SM 9-5-1375
Land Mines and Components ..... SM 9-5-1345
Pyrotechnics, Military, All Types ..... SM 9-5-1370

b. Maintenance and Repair.

Tool Kit, Automotive, Maintenance, Organizational:
(2d echelon), Set No. 2, Common (NSN 4910-00-754-0650) ..... SC 4910-95-CL-A72
Tool Kit, Automotive Maintenance, Organizational:
(2d echelon), Set No. 2, Supplemental (NSN 4940-00-754-0743)
(line item W65747) ..... SC 4940-95-CL-A08
Tool Kit, Organizational Maintenance:
(2d echelon), No. 1., Common (NSN 4910-00-754-0654), Hard Receipt ..... SC 4910-95-CL-A74HR

A-3. Forms

Refer to DA pamphlet 310-2 for index of blank forms. Refer to TM 38-750 for pertinent maintenance forms and for an explanation on use.

APPENDIX A (Cont'd)

A-3. Forms Cont'd)

DA Form 2028, Recommended Changes to Publications
DA Form 2400, Equipment Utilization Record
DA Form 2401, Organizational Control Record for Equipment
DA Form 2402, Exchange Tag
DA Form 2404, Equipment Inspection and Maintenance Worksheet
DA Form 2405, Maintenance Request Register
DA Form 2406, Materiel Readiness Report
DA Form 2407, Maintenance Request
DA Form 2407-1, Maintenance Request—Continuation Sheet
DA Form 2408, Equipment Log Assembly (Records)
DA Form 2408-1, Equipment Daily or Monthly Log
DA Form 2408-9, Equipment Transfer Record
DA Form 2408-10, Equipment Component Register
DA Form 2409, Equipment Control Record
DA Form 348, Driver Qualification Record
DA Form 285, Accident Report
DA Form 1089, Claim for Personal Property
DD Form 6, Packaging and Improvement Report
DD Form 314, Preventive Maintenance Schedule and Record
DD Form 518, Accident—Identification Card
Standard Form 46, U. S. Government Motor Vehicle Operator's Identification Card
Standard Form 91, Operator Report on Motor Vehicle Accidents

A-4. Other Publications

The following publications contain information pertinent to major items, materiel, and associated equipment.

a. Vehicle.

Lubrication—Truck, Utility, 1/4 Ton, 4x4, M151 Series ..... LO 9-2320-218-12
Operation—Truck,Utility, 1/4 Ton, 4x4, M151 Series ..... TM 9-2320-218-10
Organizational Parts—Truck, Utility, 1/4 Ton, 4x4, M151 Series ..... TM 9-2320-218-20P
DS—GS Parts + Tools ..... TM 9-2320-218-34P

b. Camouflage.

Camouflage, Basic Principles, and Field Camouflage ..... FM 5-20
Camouflage of Vehicles ..... FM 5-20B

c. Decontamination.

Chemical, Biological, and Radiological (CBR) Decontamination ..... TM 3-220
Defense Against CBR Attack ..... FM 21-40

d. General.

Cooling Systems: Tactical Vehicles ..... TM 750-254
Accident Reporting and Records ..... AR 385-40
Basic Cold-Weather Manual ..... FM 31-70
Operation and Maintenance of Ordnance Materiel in Cold Weather (0° to -65°F) ..... FM 9-207
Cooling Systems: Vehicles and Powered Ground Equipment ..... TM 9-2858
Driver Selection and Training (Wheeled Vehicles) ..... TM 21-300
Deep-Water Fording or Ordnance Materiel ..... TM 9-238
Command Maintenance Management Inspections ..... AR 750-8
Mountain Operations ..... FM 31-72
Northern Operations ..... FM 31-71

APPENDIX A (Cont'd)

A-4. Other Publications (Cont'd)

Petroleum Handling Equipment & Operations ..... FM 10-69
Preservation, Methods of MIL-P-116
Principles of Automotive Vehicles ..... TM 9-8000
Prevention of Motor Vehicle Accidents ..... AR 385-55
Procedures for Destruction of Tank-Automotive Equipment to Prevent Enemy Use ..... TM 750-244-6

e. Maintenance and Repair.

Care and Maintenance of Pneumatic Tires ..... TM 9-2610-200-20
Description, Use, Bonding Techniques, and Properties of Adhesives ..... TB ORD 1032
General Supply:
  Winterization Kits for Army Tank-Automotive Materiel ..... SB 9-16
  Inspection, Care, and Maintenance of Antifriction Bearings ..... TM 9-214
Operation and Organizational, Field and Depot Maintenance:
  Storage Batteries, Lead-Acid Type ..... TM 9-6140-200-14
Use of Antifreeze Solutions and Cleaning Compounds in Engine Cooling Systems ..... TB 750-651

Organizational, DS,GS, and Depot Maintenance:
  Installation of Searchlight, Visible-Infrared AN/GSS-14 ..... TM 11-2320-351-15-3
Operator's and Organizational Maintenance:
  Rifle, Recoilless, 106-MM ..... TM 9-1000-205-12
Operator's Manual:
  Welding Theory and Application ..... TM 9-237
Metal Body Repair and Related Operations ..... FM 43-2
Rustproofing Procedures ..... TB 43-0213

f. Shipment and Limited Storage.

Color and Marking of Army Materiel ..... TB 43-0209
Preservation, Packaging, and Packing of Military Supplies and Equipment ..... TM 38-230-1
Standards for Overseas Shipment and Domestic Issue of Combat, Tactical,
  and Special Purpose Vehicles ..... TB 9-2300-281-35
Preservation, Packaging and Packing Materials, Supplies and Equipment Used by the Army ..... SB 38-100
The Army Maintenance Management System (TAMMS) ..... TM 38-750
Packaging of Materiel ..... AR 700-15
Rail Car Loading Procedures ..... TM 55-601 (paras 6-1/6-4)
Marking for Shipping and Storage MIL-STD-129
Security of Tactical Wheeled Vehicles ..... TB 9-2300-422-20
Decontamination Apparatus, Portable, DS2 ..... TM 3-4230-204-12 & P

APPENDIX B

REPAIR PARTS AND SPECIAL TOOLS LIST

Repair parts and special tools for direct support and general support maintenance levels are listed in TM 9-2320-218-34P, which is the authority for requesting replacements.

APPENDIX C

EXPENDABLE SUPPLIES AND MATERIALS LIST

Expendable supplies and materials designated for the direct support and general support maintenance levels for the vehicles covered in this manual can be found in TM 9-2320-218-10.

APPENDIX D
ILLUSTRATED LIST OF MANUFACTURED ITEMS

This appendix includes complete instructions for making items authorized to be manufactured or fabricated at direct and general support maintenance levels.

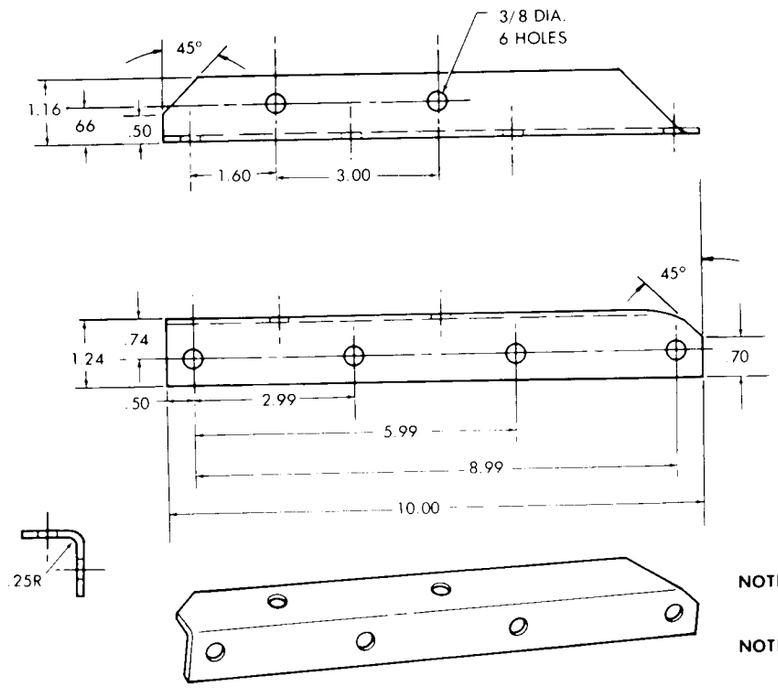

NOTE: ALL DIMENSIONS SHOWN ARE IN INCHES

NOTE: MATERIAL:
STEEL, LOW CARBON
HR P&O OR CR
COMMERCIAL QUALITY
TEMPER 3-5
SPEC. QQ-S-698
0.0897 IN. THICK

NOTE: FABRICATE ONE

REINFORCEMENT BRACKET (LEFT) — AMBULANCE EXTENSION REPAIR

TA 156202

APPENDIX D (Cont'd)

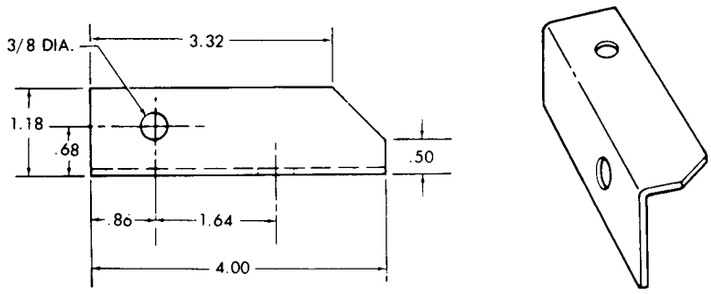

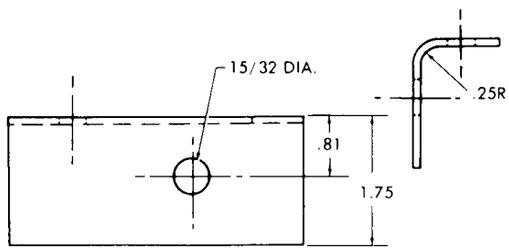

NOTE: ALL DIMENSIONS SHOWN ARE IN INCHES

NOTE: MATERIAL:
STEEL, LOW CARBON
HR P & O OR CR
COMMERCIAL QUALITY
TEMPER 3-5
SPEC. QQ-S-698
0.0897 IN. THICK

NOTE: FABRICATE ONE

REINFORCEMENT BRACKET — AMBULANCE EXTENSION REPAIR

TA 156203

APPENDIX D (Cont'd)

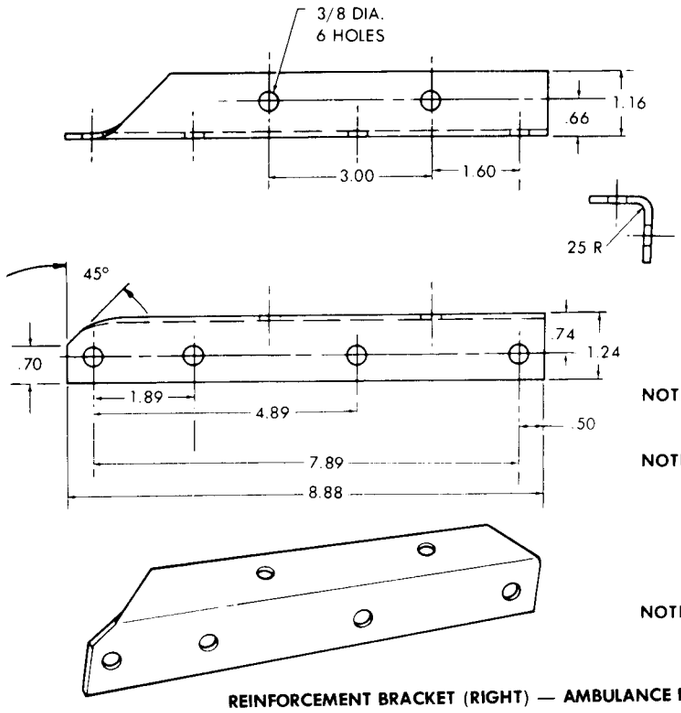

NOTE: ALL DIMENSIONS SHOWN ARE IN INCHES

NOTE: MATERIAL:
STEEL, LOW CARBON
HR P&O OR CR
COMMERCIAL QUALITY
TEMPER 3-5
SPEC. QQ-S-698
0.0897 IN. THICK

NOTE: FABRICATE ONE

REINFORCEMENT BRACKET (RIGHT) — AMBULANCE EXTENSION REPAIR

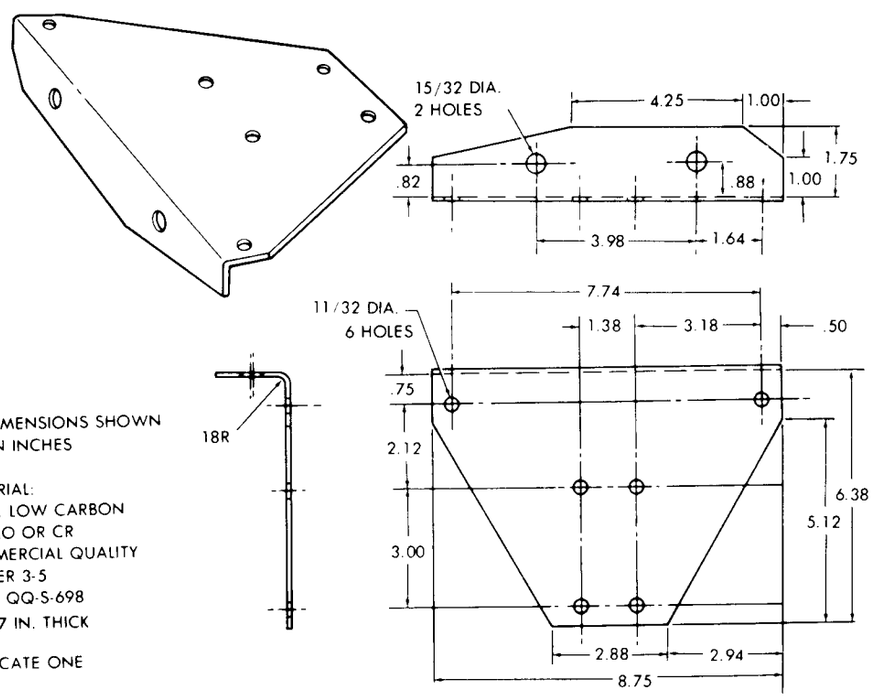

NOTE: ALL DIMENSIONS SHOWN ARE IN INCHES

NOTE: MATERIAL:
STEEL, LOW CARBON
HR P&O OR CR
COMMERCIAL QUALITY
TEMPER 3-5
SPEC. QQ-S-698
0.0897 IN. THICK

NOTE: FABRICATE ONE

EXTENSION SUPPORT BRACKET — AMBULANCE EXTENSION REPAIR

TA 156204

APPENDIX D (Cont'd)

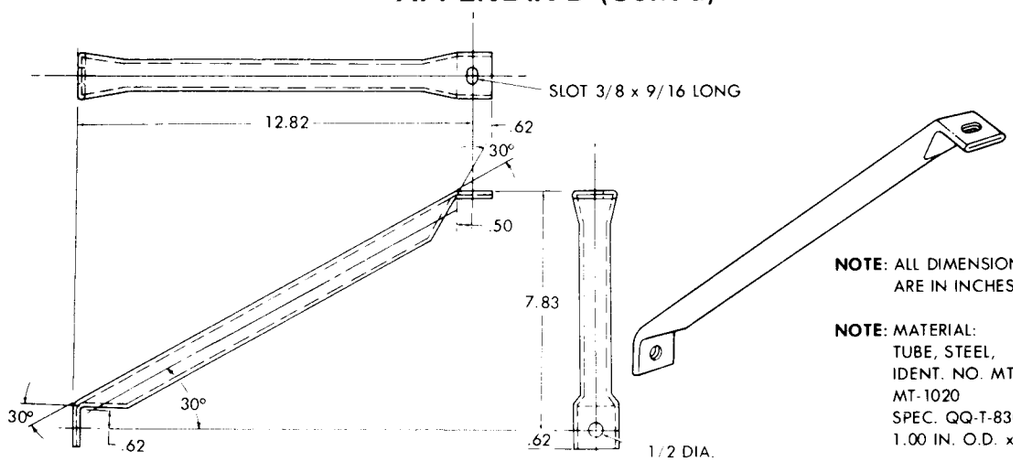

NOTE: ALL DIMENSIONS SHOWN ARE IN INCHES

NOTE: MATERIAL:
TUBE, STEEL,
IDENT. NO. MT-1010 TO MT-1020
SPEC. QQ-T-830
1.00 IN. O.D. x 0.120 IN. WALL

NOTE: FABRICATE TWO

INNER BRACE — AMBULANCE EXTENSION REPAIR

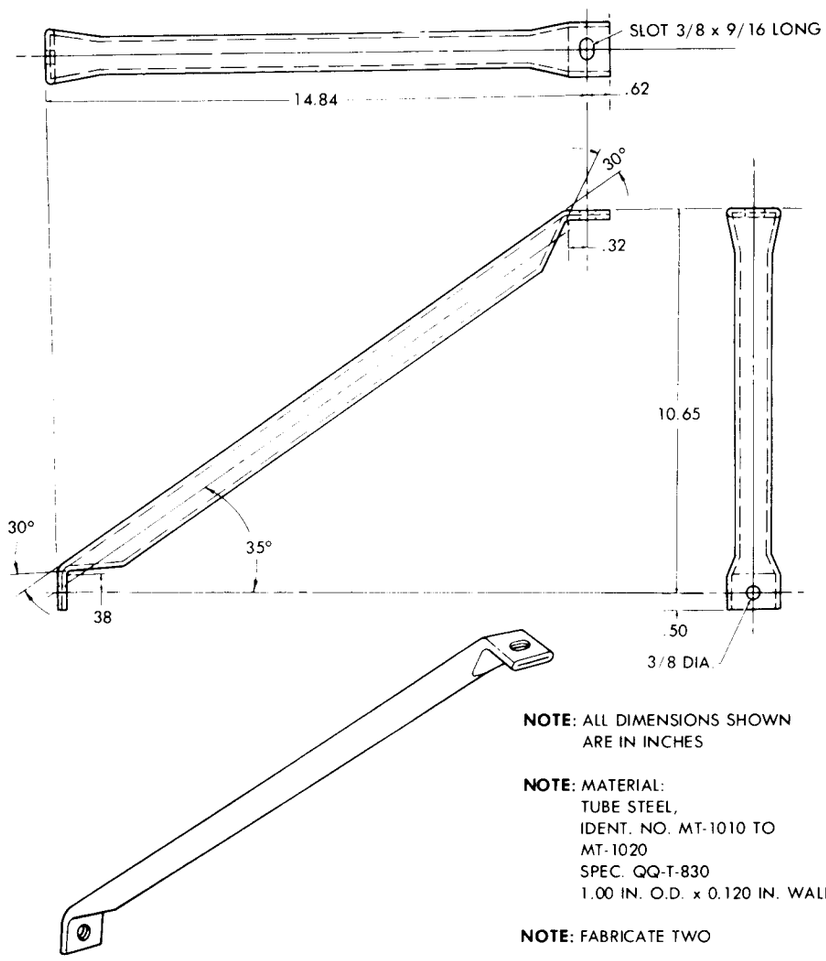

NOTE: ALL DIMENSIONS SHOWN ARE IN INCHES

NOTE: MATERIAL:
TUBE STEEL,
IDENT. NO. MT-1010 TO MT-1020
SPEC. QQ-T-830
1.00 IN. O.D. x 0.120 IN. WALL

NOTE: FABRICATE TWO

OUTER BRACE — AMBULANCE EXTENSION REPAIR

TA 156205

APPENDIX D (Cont'd)

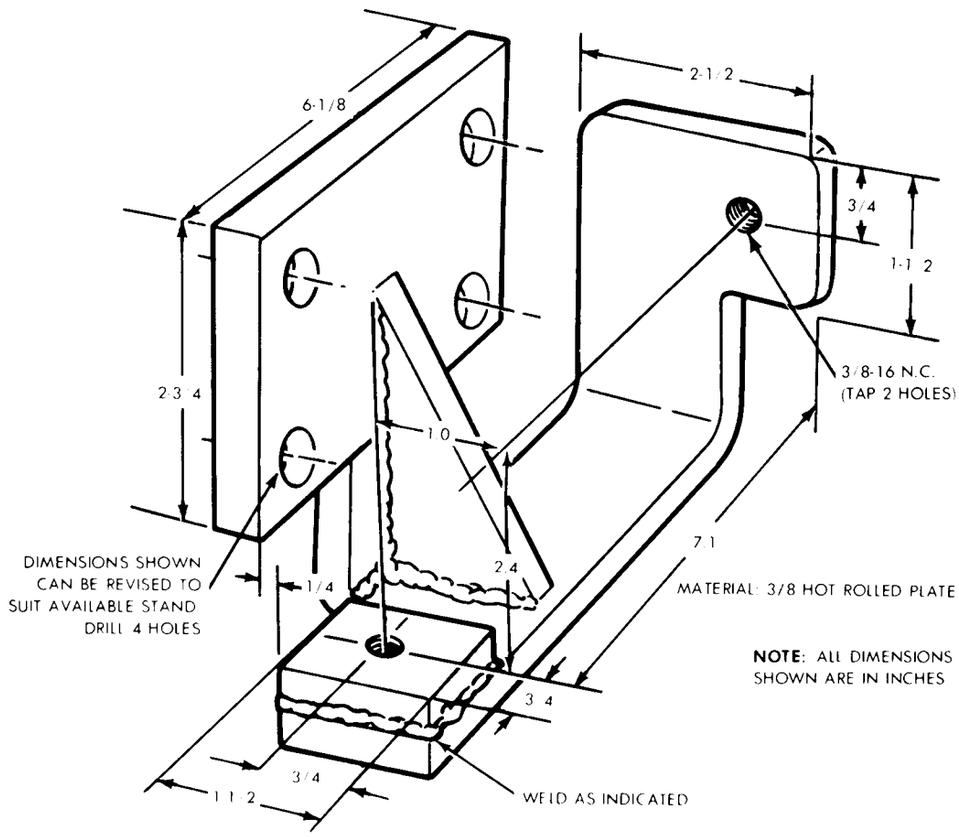

IMPROVISED TRANSMISSION HOLDING FIXTURE

TA 156206

APPENDIX D (Cont'd)

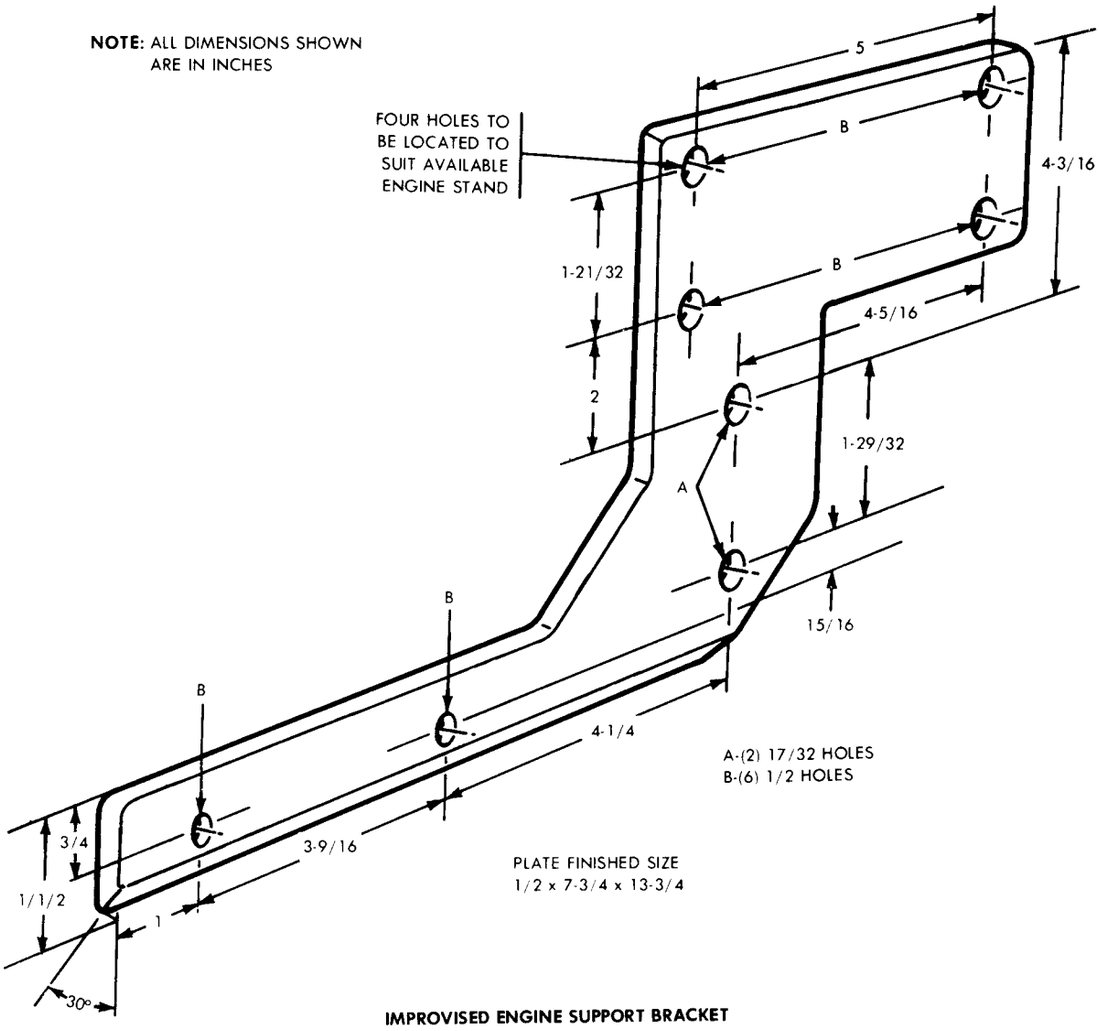

IMPROVISED ENGINE SUPPORT BRACKET

TA 156207

APPENDIX D (Cont'd)

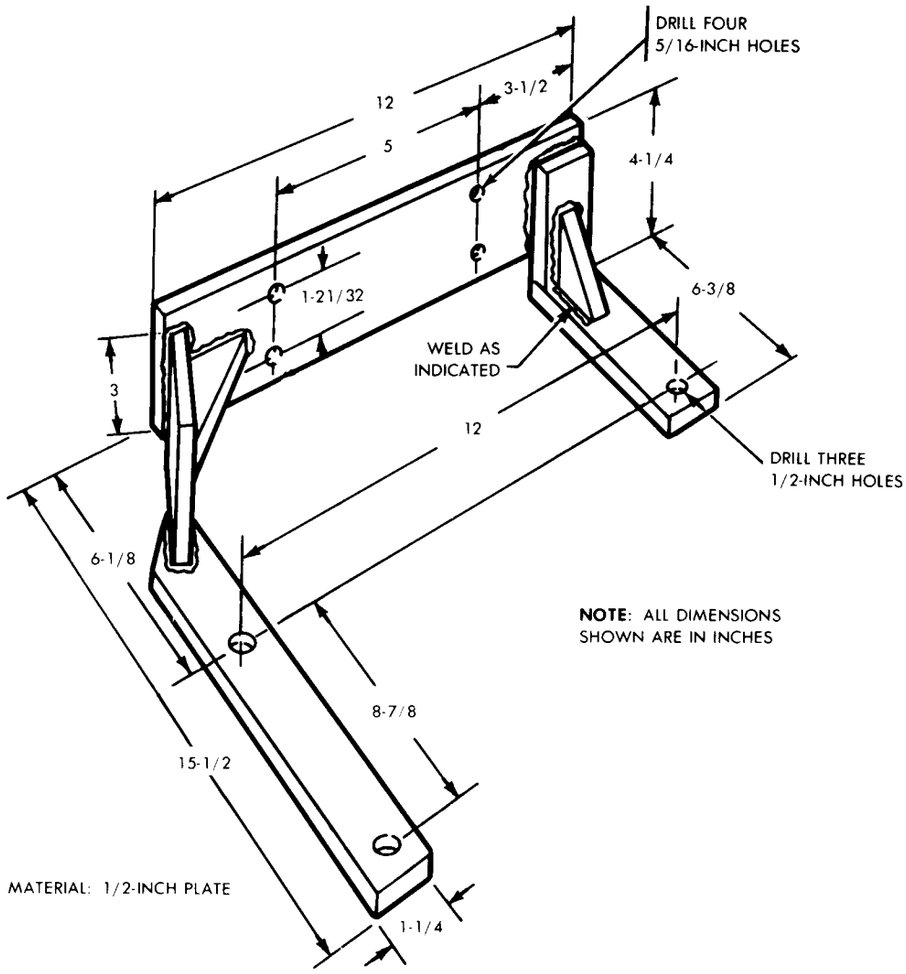

IMPROVISED DIFFERENTIAL HOLDING FIXTURE

NOTE: ALL DIMENSIONS SHOWN ARE IN INCHES

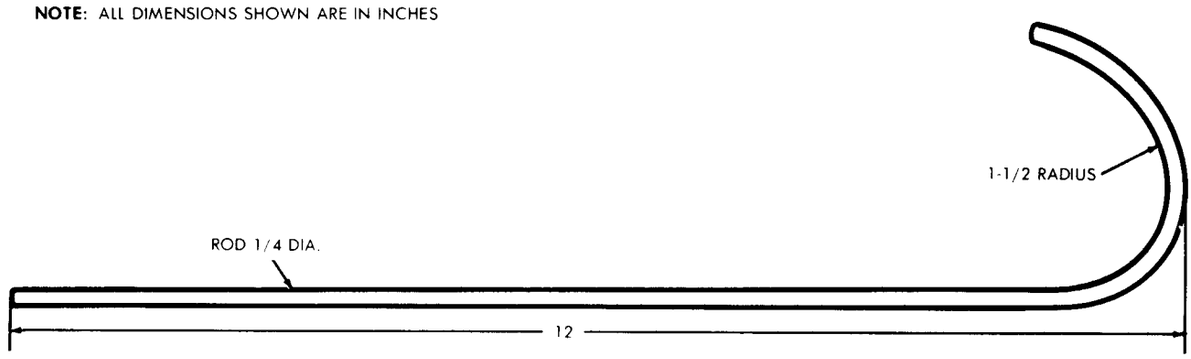

IMPROVISED CLUSTER GEAR HOOK

TA 156208

APPENDIX D (Cont'd)

NOTE: MATERIAL:
TWO 2 X 4 X .0598 IN. THICK STEEL; HIGH STRENGTH; LOW ALLOY; HOT ROLLED PICKLED IN OIL (HRPO); SHEET OR STRIP; MINIMUM YIELD STRENGTH 50,000 PSI SPECIFICATION A.S.T.M. A-606 OR QQS-698. THE MATERIAL SHOULD BE PURCHASED LOCALLY IF NOT READILY AVAILABLE THROUGH THE SUPPLY SYSTEM.

NOTE: ALL DIMENSIONS SHOWN ARE IN INCHES

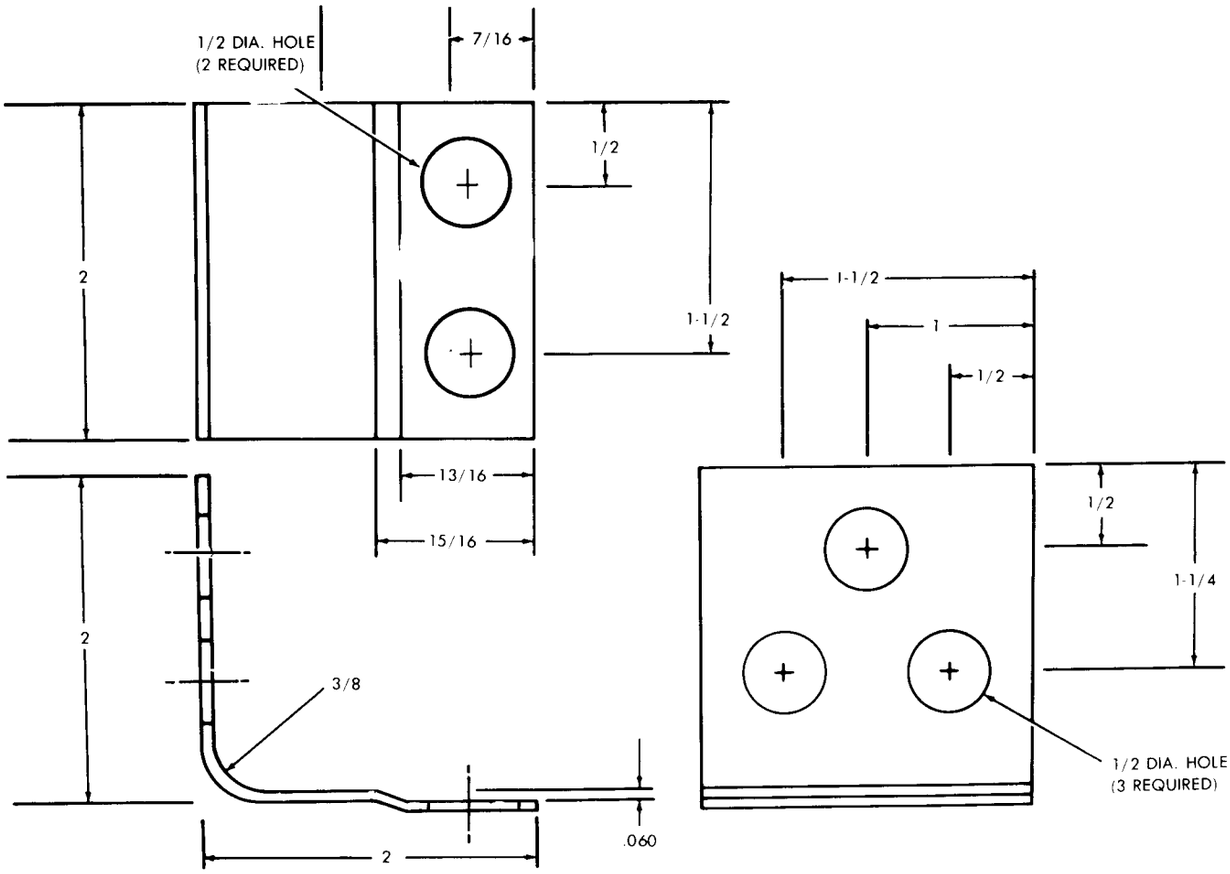

SUPPORT BRACKET — M151A2 REAR DIFFERENTIAL AND SHOCK CROSSMEMBER ASSEMBLY (11639762)

TA 156209

APPENDIX D (Cont'd)

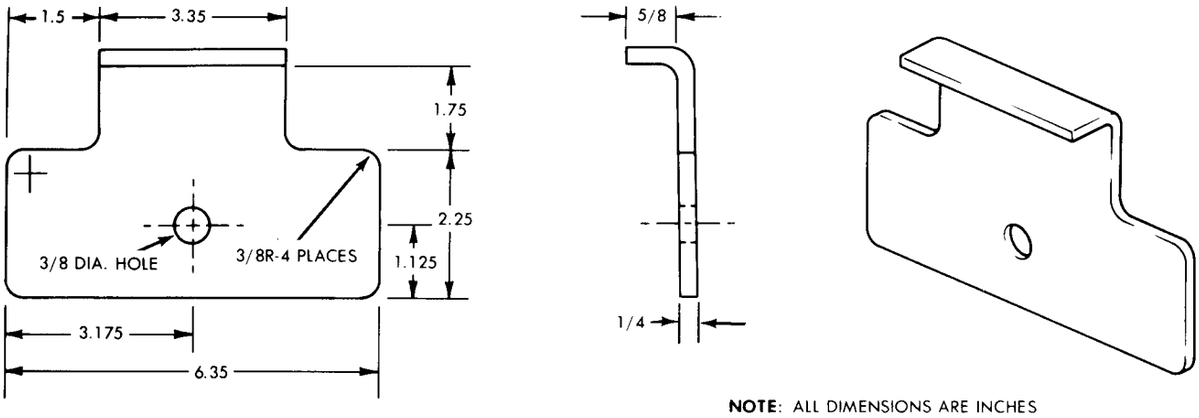

NOTE: ALL DIMENSIONS ARE INCHES

NOTE MATERIAL:
STEEL, HIGH STRENGTH, LOW ALLOY, HOT ROLLED, PICKLED IN OIL (HRPO), SHEET OR STRIP, MINIMUM YIELD STRENGTH 50,000 psi

NOTE: FABRICATE ONE

UPPER PLATE — M151A2 REAR DIFFERENTIAL AND SHOCK CROSSMEMBER ASSEMBLY REPAIR

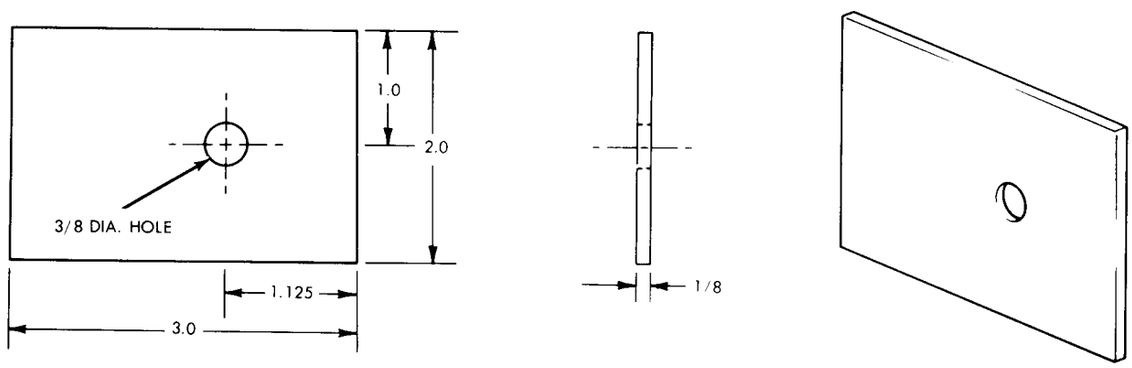

NOTE: ALL DIMENSIONS ARE INCHES

NOTE: MATERIAL:
STEEL, HIGH STRENGTH, LOW ALLOY, HOT ROLLED, PICKLED IN OIL (HRPO), SHEET OR STRIP, MINIMUM YIELD STRENGTH 50,000 psi

NOTE: FABRICATE ONE

LOWER PLATE — M151A2 REAR DIFFERENTIAL AND SHOCK CROSSMEMBER ASSEMBLY REPAIR

TA 156210

APPENDIX D (Cont'd)

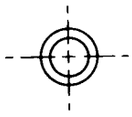

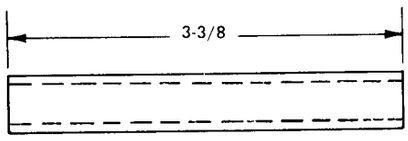

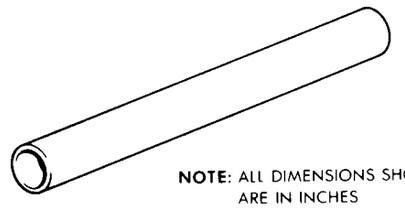

NOTE: 3/8" ID
0.060 THICK WALL
1020 STEEL

NOTE: ALL DIMENSIONS SHOWN ARE IN INCHES

NOTE: MATERIAL:
STEEL TUBE, 3/8 IN. ID,
0.060 IN WALL THICKNESS

NOTE: FABRICATE ONE

SPACER — M151A2 REAR DIFFERENTIAL AND SHOCK CROSSMEMBER ASSEMBLY REPAIR

TA 156211

APPENDIX E

TORQUE LIMITS

Unless otherwise specified in the individual installation procedures, all tightening operations should be performed with sufficient wrench torque (force on the wrench handle) to tighten a unit according to good mechanical practice. Use a torque indicating wrench where specified. Do not overtighten; this may strip threads or cause distortion. Tightening will always be understood to include the correct installation of lockwashers, locknuts, lock wire, or cotter pins to secure the tightened nut.

Standard Torque Specifications

USAGE	MUCH USED	MUCH USED	USED AT TIMES	USED AT TIMES
CAPSCREW DIAMETER AND MINIMUM TENSILE STRENGTH psi (kPa)	To 1/2-69,000 (475,755) To 3/4-64,000 (441,280) To 1-55,000 (379,225)	To 3/4-120,000 (527,400) To 1-115,000 (792,925)	To 5/8-140,000 (965,300) To 3/4-133,000 (917,035)	150,000 (1,034,250)

QUALITY OF MATERIAL	INDETERMINATE	MINIMUM COMMERCIAL	MEDIUM COMMERCIAL	BEST COMMERCIAL
SAE GRADE NUMBER	1 or 2	5	6 or 7	8
CAPSCREW HEAD MARKINGS: Manufacturer's marks may vary. These are all SAE Grade 5 (3-line). 	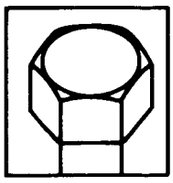	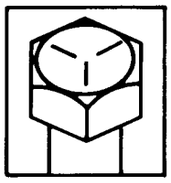	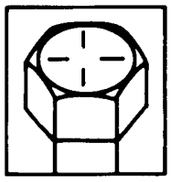	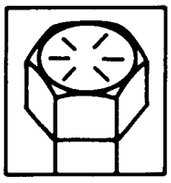

TA 156149

APPENDIX E (Cont'd)

Standard Torque Specifications (Cont'd)

CAPSCREW BODY SIZE (INCHES)—(THREAD)	TORQUE lb-ft	TORQUE (N•m)	TORQUE lb-ft	TORQUE (N•m)	TORQUE lb-ft	TORQUE (N•m)	TORQUE lb-ft	TORQUE (N•m)
1/4—20	5	6.78	8	10.8	10	13.6	12	16.3
—28	6	8.13	10	13.6			14	18.9
5/16—18	11	14.9	17	23.1	19	25.8	24	32.5
—24	13	17.6	19	25.8			27	36.6
3/8—16	18	24.5	31	42.0	34	46.1	44	59.7
—24	20	27.1	35	47.5			49	66.4
7/16—14	28	37.9	49	66.4	55	74.6	70	94.9
—20	30	40.7	55	74.6			78	105.8
1/2—13	39	52.9	75	101.7	85	115.3	105	142.3
—20	41	55.6	85	115.3			120	162.7
9/16—12	51	69.2	110	149.1	120	162.7	155	210.0
—18	55	74.6	120	162.7			170	230.5
5/8—11	83	112.5	150	203.4	167	226.4	210	284.7
—18	95	128.8	170	230.5			240	325.4
3/4—10	105	142.3	270	366.1	280	379.6	375	508.5
—16	115	155.9	295	400.1			420	569.5
7/8—9	160	216.9	395	535.6	440	596.6	605	820.3
—14	175	237.3	435	589.8			675	915.3
1—8	235	318.6	590	800.0	660	894.9	910	1233.9
—14	250	339.1	660	894.9			990	1342.4

1. Always use the torque values listed above when specific specifications are not available.

NOTE

Do not use above values in place of those specified in the engine groups of this manual; special attention should be observed in case of SAE Grade 6, 7 and 8 capscrews.

2. The above is based on use of clean and dry threads.
3. Reduce torque by 10% when engine oil is used as a lubricant.
4. Reduce torque by 20% if new plated capscrews are used.

CAUTION

Capscrews threaded into aluminum may require reductions in torque of 30% or more, unless inserts are used.

Tubing Application Tightening Assembly Instructions

Slide tubing over barbed insert until bottomed on fitting.

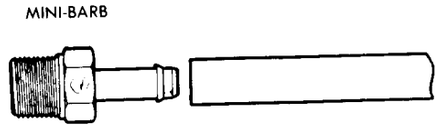

TA 156148

APPENDIX E (Cont'd)

Tubing Application Tightening Assembly Instructions (Cont'd)

KNURL-ON

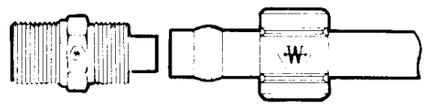

1. Slide nut and then sleeve on tubing.
2. Slide I.D. of tubing onto fitting insert until it bottoms.
3. Assemble nut to fitting body.
4. Tighten assembly finger tight to cover body threads.

SELF-ALINE-PTF

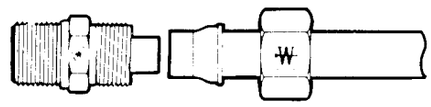

1. Slide nut and then sleeve on tubing.
2. Slide I.D. of tubing onto fitting insert until it bottoms.
3. Assemble nut to fitting body.
4. Tighten nut finger tight. From that point, tighten with a wrench two complete turns.

BRASS PIPE

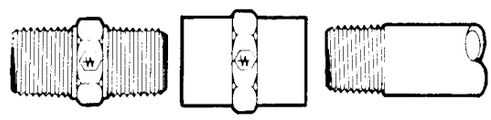

It is recommended that all pipe threads be tightened a minimum of 2-1/2 full turns past hand tight.

NYLON TUBING
FOR AIR BRAKE

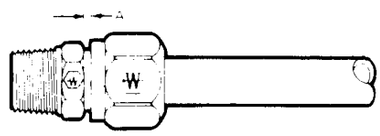

1. Cut tubing to desired length. Make sure that the ends are cut reasonably square.
2. Slide tubing into the preassembled fitting and push until tube bottoms.
3. Tighten nut as indicated in chart. Another check on proper assembly is dimension "A" when nut is fully tightened.

DISASSEMBLY — Remove nut and pull tubing out of fitting body. Insert will remain in tubing.
REASSEMBLY — Push tubing and insert into fitting body until it bottoms. Thread nut onto fitting body and tighten as in step 3.

TUBE O.D.	TIGHTEN NUT TO:	A	
1/4	85 - 115 lb-in (9.6-12.9 N•m)	.085	.105
3/8	12 - 17 lb-ft (16.3-23.1 N•m)	.125	.145
1/2	25 - 33 lb-ft (33.9-44.7 N•m)	.100	.120
5/8	26 - 35 lb-ft (35.3-47.5 N•m)	.115	.135
3/4	38 - 50 lb-ft (51.5-67.8 N•m)	.180	.200

COPPER TUBING
FOR AIR BRAKE

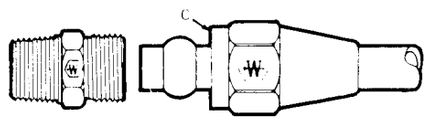

1. Slide nut and then sleeve on tubing. Threaded end of nut (C) must face out.
2. Insert tubing into fitting. Be sure tubing is bottomed on fitting shoulder.
3. Thread nut onto fitting body until it is hard tight.
4. From that point, tighten with a wrench the number of turns indicated right.

TUBE SIZE	ADDITIONAL NUMBER OF TURNS FROM HAND TIGHT
1/4, 3/8	1-3/4
1/2, 5/8, 3/4	3-1/4

TA 156147

INDEX

INDEX (Cont'd)

INDEX (Cont'd)

INDEX (Cont'd)

INDEX (Cont'd)

INDEX (Cont'd)

INDEX (Cont'd)

INDEX (Cont'd)

INDEX (Cont'd)

INDEX (Cont'd)

INDEX (Cont'd)

N

O

INDEX (Cont'd)

INDEX (Cont'd)

INDEX (Cont'd)

S

INDEX (Cont'd)

INDEX (Cont'd)

INDEX (Cont'd)

INDEX (Cont'd)

By Order of the Secretary of the Army:

E.C. MEYER
General, United States Army
Chief of Staff

Official:

ROBERT M. JOYCE
Brigadier General, United States Army
The Adjutant General

Distribution:
To be distributed in accordance with DA Form 12-38, (qty blk no. 148), Direct Support and General Support Maintenance requirements for Truck, 1/4 Ton, 4 X 4, M151A2 Series.

☆ U.S. GOVERNMENT PRINTING OFFICE : 1985 O - 461-421 (20969)

RECOMMENDED CHANGES TO EQUIPMENT TECHNICAL PUBLICATIONS

THEN. . .JOT DOWN THE DOPE ABOUT IT ON THIS FORM, CAREFULLY TEAR IT OUT, FOLD IT AND DROP IT IN THE MAIL!

SOMETHING WRONG WITH THIS PUBLICATION?

FROM: (PRINT YOUR UNIT'S COMPLETE ADDRESS)
Your mailing address

DATE SENT Day you fill out Form

PUBLICATION NUMBER	PUBLICATION DATE	PUBLICATION TITLE
TM 9-2320-218-34-1	Date of TM	DIRECT AND GENERAL SUPPORT MAINTENANCE

BE EXACT . . PIN-POINT WHERE IT IS — IN THIS SPACE TELL WHAT IS WRONG AND WHAT SHOULD BE DONE ABOUT IT:

PAGE NO.	PARA-GRAPH	FIGURE NO.	TABLE NO.	
2-22	2-11			Step 45 Item reads: Two shutoff draincocks (2)... Should read: Two shutoff draincocks (1)
4-13	4-7			Illustration callout number (6) shows a capscrew. Show a slotted screw-assembled lockwasher.
11-32	11-10			Special tools list in Initial setup does not mention spanner wrench. Should list spanner wrench
11-54	11-14		11-3	Reference number 4 reads: Outside diameter, side bearing bore ... Should read: inside diameter, side bearing bore.

SAMPLE

TA 157114

PRINTED NAME, GRADE OR TITLE, AND TELEPHONE NUMBERS
Type your name, rank and Phone

SIGN HERE:
PFC John Q. Doe

DA FORM 1 JUL 79 2028-2 PREVIOUS EDITIONS ARE OBSOLETE.

P.S.—IF YOUR OUTFIT WANTS TO KNOW ABOUT YOUR RECOMMENDATION MAKE A CARBON COPY OF THIS AND GIVE IT TO YOUR HEADQUARTERS.

REVERSE OF DA FORM 2028-2

FILL IN YOUR
UNIT'S ADDRESS

FOLD BACK

TEAR ALONG PERFORATED LINE

DEPARTMENT OF THE ARMY

OFFICIAL BUSINESS
PENALTY FOR PRIVATE USE $300

POSTAGE AND FEES PAID
DEPARTMENT OF THE ARMY
DOD 314

U.S. MAIL

COMMANDER
U.S. ARMY TANK-AUTOMOTIVE COMMAND
ATTN: DRSTA-MB
WARREN, MI 48090

RECOMMENDED CHANGES TO EQUIPMENT TECHNICAL PUBLICATIONS

SOMETHING WRONG WITH THIS PUBLICATION?

THEN. . .JOT DOWN THE DOPE ABOUT IT ON THIS FORM, CAREFULLY TEAR IT OUT, FOLD IT AND DROP IT IN THE MAIL!

FROM: (PRINT YOUR UNIT'S COMPLETE ADDRESS)

DATE SENT

PUBLICATION NUMBER	PUBLICATION DATE	PUBLICATION TITLE
TM 9-2320-218-34-1		DIRECT AND GENERAL SUPPORT MAINTENANCE

BE EXACT . . PIN-POINT WHERE IT IS

PAGE NO.	PARA-GRAPH	FIGURE NO.	TABLE NO.

IN THIS SPACE TELL WHAT IS WRONG AND WHAT SHOULD BE DONE ABOUT IT:

PRINTED NAME, GRADE OR TITLE, AND TELEPHONE NUMBERS

SIGN HERE:

DA FORM 1 JUL 79 2028-2

PREVIOUS EDITIONS ARE OBSOLETE.

P.S.—IF YOUR OUTFIT WANTS TO KNOW ABOUT YOUR RECOMMENDATION MAKE A CARBON COPY OF THIS AND GIVE IT TO YOUR HEADQUARTERS.

REVERSE OF DA FORM 2028-2

FILL IN YOUR
UNIT'S ADDRESS

FOLD BACK

TEAR ALONG PERFORATED LINE

DEPARTMENT OF THE ARMY

OFFICIAL BUSINESS
PENALTY FOR PRIVATE USE $300

POSTAGE AND FEES PAID
DEPARTMENT OF THE ARMY
DOD 314

U.S. MAIL

COMMANDER
U.S. ARMY TANK-AUTOMOTIVE COMMAND
ATTN: DRSTA-MB
WARREN, MI 48090

RECOMMENDED CHANGES TO EQUIPMENT TECHNICAL PUBLICATIONS

SOMETHING WRONG WITH THIS PUBLICATION?

THEN. . .JOT DOWN THE DOPE ABOUT IT ON THIS FORM, CAREFULLY TEAR IT OUT, FOLD IT AND DROP IT IN THE MAIL!

FROM: (PRINT YOUR UNIT'S COMPLETE ADDRESS)

DATE SENT

PUBLICATION NUMBER	PUBLICATION DATE	PUBLICATION TITLE
TM 9-2320-218-34-1		DIRECT AND GENERAL SUPPORT MAINTENANCE

BE EXACT . . PIN-POINT WHERE IT IS

PAGE NO.	PARA-GRAPH	FIGURE NO.	TABLE NO.

IN THIS SPACE TELL WHAT IS WRONG AND WHAT SHOULD BE DONE ABOUT IT:

PRINTED NAME, GRADE OR TITLE, AND TELEPHONE NUMBERS

SIGN HERE:

DA FORM 1 JUL 79 2028-2

PREVIOUS EDITIONS ARE OBSOLETE.

P.S.—IF YOUR OUTFIT WANTS TO KNOW ABOUT YOUR RECOMMENDATION MAKE A CARBON COPY OF THIS AND GIVE IT TO YOUR HEADQUARTERS.

REVERSE OF DA FORM 2028-2

FILL IN YOUR
UNIT'S ADDRESS

FOLD BACK

TEAR ALONG PERFORATED LINE

DEPARTMENT OF THE ARMY

OFFICIAL BUSINESS
PENALTY FOR PRIVATE USE $300

POSTAGE AND FEES PAID
DEPARTMENT OF THE ARMY
DOD 314

U.S. MAIL

COMMANDER
U.S. ARMY TANK-AUTOMOTIVE COMMAND
ATTN: DRSTA-MB
WARREN, MI 48090

RECOMMENDED CHANGES TO EQUIPMENT TECHNICAL PUBLICATIONS

SOMETHING WRONG WITH THIS PUBLICATION?

FROM: (PRINT YOUR UNIT'S COMPLETE ADDRESS)

DATE SENT

PUBLICATION NUMBER	PUBLICATION DATE	PUBLICATION TITLE
TM 9-2320-218-34-1		DIRECT AND GENERAL SUPPORT MAINTENANCE

BE EXACT . . PIN-POINT WHERE IT IS

PAGE NO.	PARA-GRAPH	FIGURE NO.	TABLE NO.

IN THIS SPACE TELL WHAT IS WRONG AND WHAT SHOULD BE DONE ABOUT IT:

PRINTED NAME, GRADE OR TITLE, AND TELEPHONE NUMBERS

SIGN HERE:

DA FORM 1 JUL 79 2028-2

PREVIOUS EDITIONS ARE OBSOLETE.

P.S.—IF YOUR OUTFIT WANTS TO KNOW ABOUT YOUR RECOMMENDATION MAKE A CARBON COPY OF THIS AND GIVE IT TO YOUR HEADQUARTERS.

REVERSE OF DA FORM 2028-2

FILL IN YOUR
UNIT'S ADDRESS

FOLD BACK

TEAR ALONG PERFORATED LINE

DEPARTMENT OF THE ARMY

OFFICIAL BUSINESS
PENALTY FOR PRIVATE USE $300

POSTAGE AND FEES PAID
DEPARTMENT OF THE ARMY
DOD 314

U.S. MAIL

COMMANDER
U.S. ARMY TANK-AUTOMOTIVE COMMAND
ATTN: DRSTA-MB
WARREN, MI 48090

THE METRIC SYSTEM AND EQUIVALENTS

LINEAR MEASURE
1 Centimeter = 10 Millimeters = 0.01 Meters = 0.3937 Inches
1 Meter = 100 Centimeters = 1,000 Millimeters = 39.37 Inches
1 Kilometer = 1,000 Meters = 0.621 Miles

WEIGHTS
1 Gram = 0.001 Kilograms = 1,000 Milligrams = 0.035 Ounces
1 Kilogram = 1,000 Grams = 2.2 Lb
1 Metric Ton = 1,000 Kilograms = 1 Megagram = 1.1 Short Tons

LIQUID MEASURE
1 Milliliter = 0.001 Liters = 0.0338 Fluid Ounces
1 Liter = 1,000 Milliliters = 33.82 Fluid Ounces

SQUARE MEASURE
1 Sq Centimeter = 100 Sq Millimeters = 0.155 Sq Inches
1 Sq Meter = 10,000 Sq Centimeters = 10.76 Sq Feet
1 Sq Kilometer = 1,000,000 Sq Meters = 0.386 Sq Miles

CUBIC MEASURE
1 Cu Centimeter = 1,000 Cu Millimeters = 0.06 Cu Inches
1 Cu Meter = 1,000,000 Cu Centimeters = 35.31 Cu Feet

TEMPERATURE
5/9 (°F -32) = °C
212° Fahrenheit is equivalent to 100° Celsius
90° Fahrenheit is equivalent to 32.2° Cesius
32° Fahrenheit is equivalent to 0° Celsius
9 5 C° +32 = F°

APPROXIMATE CONVERSION FACTORS

TO CHANGE	TO	MULTIPLY BY
Inches	Centimeters	2.540
Feet	Meters	0.305
Yards	Meters	0.914
Miles	Kilometers	1.609
Square Inches	Square Centimeters	6.451
Square Feet	Square Meters	0.093
Square Yards	Square Meters	0.836
Square Miles	Square Kilometers	2.590
Acres	Square Hectometers	0.405
Cubic Feet	Cubic Meters	0.028
Cubic Yards	Cubic Meters	0.765
Fluid Ounces	Milliliters	29.573
Pints	Liters	0.473
Quarts	Liters	0.946
Gallons	Liters	3.785
Ounces	Grams	28.349
Pounds	Kilograms	0.454
Short Tons	Metric Tons	0.907
Pound-Feet	Newton-Meters	1.356
Pounds Per Square Inch	Kilopascals	6.895
Miles Per Gallon	Kilometers Per Liter	0.425
Miles Per Hour	Kilometers Per Hour	1.609

TO CHANGE	TO	MULTIPLY BY
Centimeters	Inches	0.394
Meters	Feet	3.280
Meters	Yards	1.094
Kilometers	Miles	0.621
Square Centimeters	Square Inches	0.155
Square Meters	Square Feet	10.764
Square Meters	Square Yards	1.196
Square Kilometers	Square Miles	0.386
Square Hectometers	Acres	2.471
Cubic Meters	Cubic Feet	35.315
Cubic Meters	Cubic Yards	1.308
Milliliters	Fluid Ounces	0.034
Liters	Pints	2.113
Liters	Quarts	1.057
Liters	Gallons	0.264
Grams	Ounces	0.035
Kilograms	Pounds	2.205
Metric Tons	Short Tons	1.102
Newton-Meters	Pound-Feet	0.738
Kilopascals	Pounds Per Square Inch	0.145
Kilometers Per Liter	Miles Per Gallon	2.354
Kilometers Per Hour	Miles Per Hour	0.621

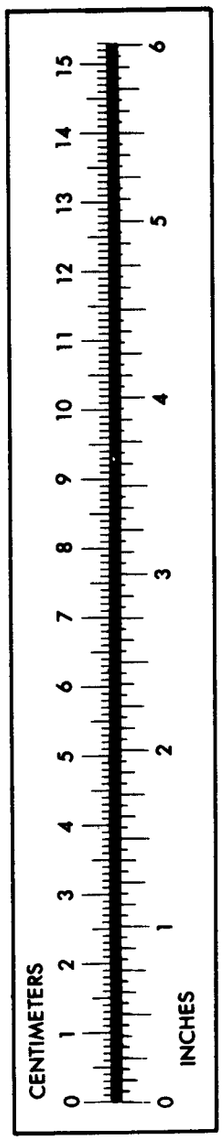

TA 089991