TM 9-2330-227-14&P

TECHNICAL MANUAL

OPERATOR'S, ORGANIZATIONAL, DIRECT SUPPORT, AND GENERAL SUPPORT MAINTENANCE (INCLUDING REPAIR PARTS AND SPECIAL TOOLS LISTS)

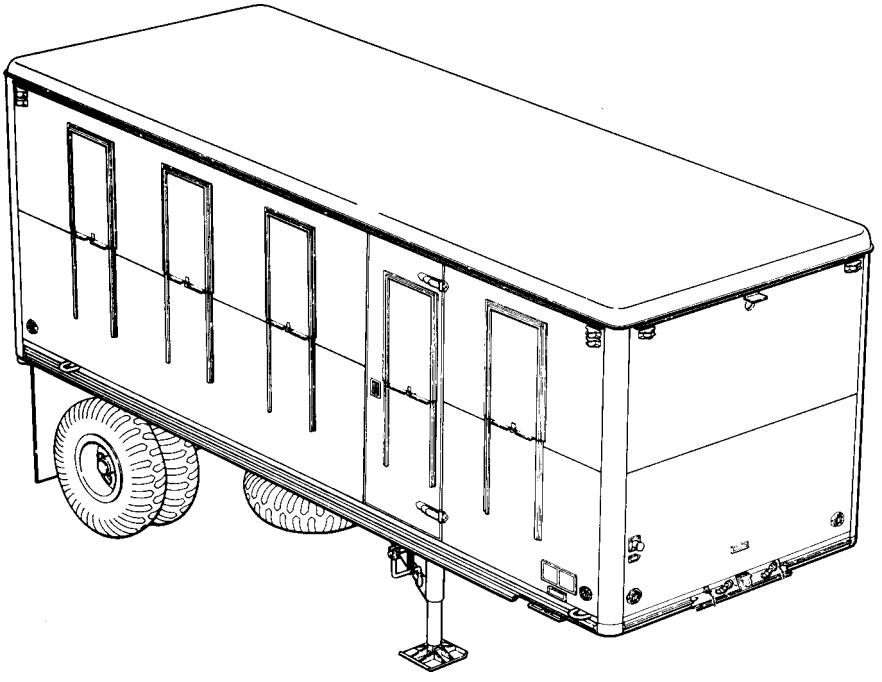

SEMITRAILER, VAN: SHOP, 6-TON, SINGLE AXLE, M146 (NSN 2330-00-569-9372)

HEADQUARTERS, DEPARTMENT OF THE ARMY

JUNE 1985

WARNING

USING DRYCLEANING SOLVENT

Drycleaning solvent PD-680 is both toxic and flammable. Avoid prolonged breathing of vapors and avoid skin contact. Use only in well-ventilated area, and keep away from open flame or excessive heat. Injury to personnel could occur.

WARNING

FUEL

Fuel burns easily. Fumes are explosive. Do not smoke or allow open flame nearby when working. Failure to observe these precautions could cause serious injury or death.

WARNING

COUPLING

All persons not involved in coupling operation must stand clear of truck tractor and semitrailer to prevent possible injury.

WARNING

NONOPERATIONAL LIGHTS

Do not operate semitrailer with burned out, missing, or damaged lights. Failure to be seen could result in injury to personnel.

WARNING

COMPRESSED AIR

Particles blown by compressed air are hazardous. Make certain air stream is directed away from user and other personnel in area. To prevent injury, user must wear protective goggles or face shield when using compressed air.

WARNING

BALANCE LANDING LEGS

Semitrailer may tip over causing injury to personnel if landing legs are not balanced. Make sure legs are balanced.

For first aid information, refer to FM 21-11.

WARNING

SPARE TIRE PAWL

Make sure pawl is engaged in ratchet teeth. If pawl is not engaged, spare tire and wheel assembly may fall and cause serious injury.

WARNING

SPARE TIRE WEIGHT

Weight of spare tire and wheel assembly will cause lug wrench to spin freely if not held securely after pawl has been taken off ratchet teeth. Freely spinning lug wrench may cause injury to personnel. Allow spare tire and wheel assembly to lower slowly.

WARNING

ELECTRICAL POWER DISCONNECT

Contact with live 110-volt electrical wires could result in serious injury or death. Make sure power source is disconnected before performing maintenance on the electrical system.

WARNING

SUPPORT HEAVY PARTS

When lifting heavy parts, have someone help you. Make sure lifting/jacking equipment is working properly, is suitable for the task assigned, and is secured against slipping to avoid injury to personnel.

WARNING

COMPRESSED AIR FOR CLEANING

Compressed air used for cleaning purposes will not exceed 30 psi. Use only with effective chip guarding and personnel equipment (goggles/shield/gloves, etc) to prevent injury.

WARNING

OVERHEATED BRAKEDRUMS AND HUBS

When touched, overheated brakedrums and hubs can cause severe burns to personnel.

WARNING

BRAKESHOE ADJUSTMENT

Do not adjust brakeshoes when brakedrums are hot. When touched, overheated brakedrums can cause severe burns to personnel.

WARNING

ASBESTOS FIBERS

Brake linings contain asbestos fibers. Protective mask must be worn while performing maintenance on brake linings. Failure to do so could result in injury or death to personnel.

WARNING

BRAKE LININGS

Worn brake linings could result in injury or death to personnel. When brake linings are worn to within 0.0625-inch (1.59 mm) of rivets, they must be replaced.

WARNING

AIR RESERVOIR

Failure to wear protective eye goggles when opening air reservoir draincock could cause serious eye injury.

WARNING

POWER TOOLS

Always use power tools carefully to prevent injury to personnel.

WARNING

WELDING

Heat, sparks, and flash from welding can cause serious damage to your eyes and skin. Be sure to wear proper protective clothing and protective eye gear when using acetylene torch.

WARNING

GRINDING

Sparks and debris caused by grinding can cause serious damage to your eyes and skin. Be sure to wear proper protective clothing and protective face shield when using grinder.

WARNING

KINGPIN

Be sure assistant, that holds kingpin in place, wears insulated gloves. Transfer of heat or popping of weldment can cause serious burns.

WARNING

LIFTING SEMITRAILER

As semitrailer body is lifted, the bogie assembly will tend to tip either forward or backward. Be ready with dolly jacks and blocks to prevent unwanted movement. Failure to heed this warning could result in personnel injury.

Observe all WARNINGS and CAUTIONS

CHANGE

NO. 1

HEADQUARTERS
DEPARTMENT OF THE ARMY
WASHINGTON, D. C., **22 May 1992**

OPERATOR'S, ORGANIZATIONAL, DIRECT SUPPORT, AND GENERAL SUPPORT MAINTENANCE MANUAL (INCLUDING REPAIR PARTS AND SPECIAL TOOLS LISTS)

SEMITRAILER, VAN: SHOP, 6-TON, SINGLE AXLE M146 (NSN 2330-00-569-9372) M146F (NSN 2330-00-015-6620)

Current as of 5 November 1991

TM 9-2330-227-14&P, 11 June 1985, is changed as follows:

1. Cover. The manual title is changed to read as shown above.

2. Remove old pages and insert new pages.

3. New or changed material is indicated by a vertical bar in the margin and by a vertical bar adjacent to the TA number.

Remove Pages	Insert Pages
i through v/(vi blank)	*i through v/(vi blank)*
1-1 and 1-2	*1-1 and 1-2*
3-7 and 3-8	*3-7 and 3-8*
3-13 through 3-20	*3-13 through 3-20*
4-1 and 4-2	*4-1 and 4-2*
4-5 through 4-8	*4-5 through 4-8*
4-71 and 4-72	*4-71 and 4-72*
4-79 through 4-84	*4-79 through 4-84*
4-143 and 4-144	*4-143 and 4-144*
4-147 through 4-152	*4-147 through 4-152*
5-49 and 5-50	*5-49 and 5-50*
A-1 and A-2	*A-1 and A-2*
C-1 through C-3/(C-4 blank)	*C-1 through C-3/(C-4 blank)*
E-1 and E-2	*E-1 and E-2*
Appendix F (in its entirety)	*Appendix F (in its entirety)*
Index-7 and Index-8	*Index-7 and Index-8*
Index-11 and Index-12	*Index-11 and Index-12*
Index-15 through Index-18	*Index-15 through Index-18*

4. File this change sheet in front of the publication for reference purposes.

Approved for public release; distribution unlimited.

By Order of the Secretary of the Army

GORDON R. SULLIVAN
General, United States Army
Chief of Staff

Official:

MILTON H. HAMILTON
Administrative Assistant to the
Secretary of the Army
01506

Distribution

To be distributed in accordance with DA Form 12-39-E (Block 0776) Operator, Unit, Direct Support and General Support maintenance requirements for TM9-2330-227-14&P.

TECHNICAL MANUAL
NO. 9-2330-227-14&P

HEADQUARTERS
DEPARTMENT OF THE ARMY
WASHINGTON, D.C. *11 June 1985*

OPERATOR'S, ORGANIZATIONAL, DIRECT SUPPORT, AND GENERAL SUPPORT MAINTENANCE MANUAL (INCLUDING REPAIR PARTS AND SPECIAL TOOLS LISTS)

SEMITRAILER, VAN: SHOP
6-TON, SINGLE AXLE
M146 (NSN 2330-00-569-9372)
M146F (NSN 2330-00-015-6620)

Current as of 26 October 1984

REPORTING ERRORS AND RECOMMENDING IMPROVEMENTS

You can help improve this manual. If you find any mistakes or if you know of a way to improve the procedures, please let us know. Mail your letter, DA Form 2028 (Recommended Changes to Publications and Blank Forms), or DA Form 2028-2 located in the back of this manual directly to: Commander, US Army Tank-Automotive Command, ATTN: AMSTA-MB, Warren, MI 48397-5000. A reply will be sent to you.

TABLE OF CONTENTS

*This manual supersedes TM 9-2330-227-14, 1 November 1972, with all changes.

TABLE OF CONTENTS - CONTINUED

TABLE OF CONTENTS - CONTINUED

TABLE OF CONTENTS - CONTINUED

TABLE OF CONTENTS – CONTINUED

CHAPTER 1

INTRODUCTION

OVERVIEW

The purpose of this chapter is to acquaint you with the M146 shop van semitrailer's equipment, size, shape, and how the semitrailer system works.

Section I. GENERAL INFORMATION

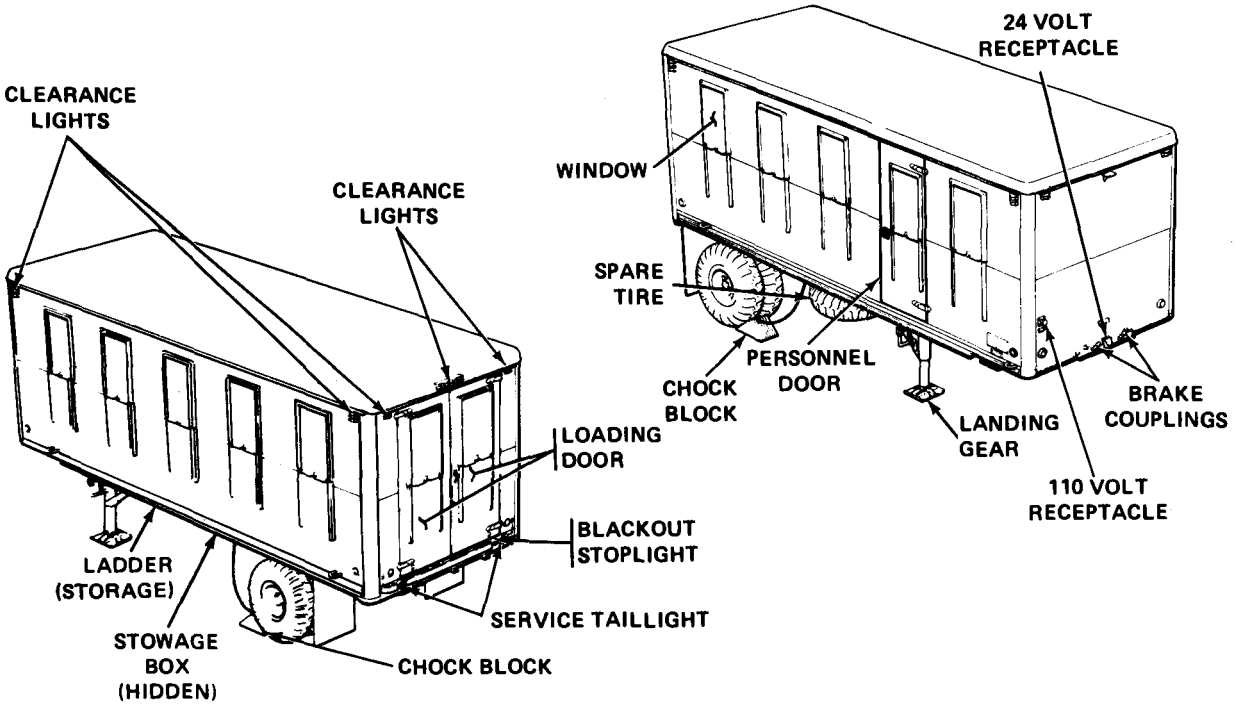

TA231187

SCOPE

Type of Manual: Operator's, Organizational, Direct Support, and General Support Maintenance (including Repair Parts and Special Tools Lists).

Model Number and Equipment Name: M146 Shop Van Semitrailer. Early and late models.

Purpose of Equipment: To provide quarters for field shop equipment.

MAINTENANCE FORMS AND RECORDS

Department of the Army forms and procedures used for equipment maintenance will be those prescribed by DA PAM 738-750, The Army Maintenance Management System (TAMMS).

EQUIPMENT IMPROVEMENT REPORT AND MAINTENANCE DIGEST (EIR MD)

The quarterly Equipment Improvement Report and Maintenance Digest, TB 43-0001-39 series, contains valuable field information on the equipment covered in this manual. The information in the TB 43-0001-39 series is compiled from some of the Equipment Improvement Reports that you prepared on the vehicle covered in this manual. Many of these articles result from comments, suggestions, and improvement recommendations that you submitted to the EIR program. The TB 43-0001-39 series contains information on equipment improvements, minor alterations, proposed Modification Work Orders (MWO;s), warranties (if applicable), actions taken on some of your DA Form 2028's (Recommended Changes to Publications), and advance information on proposed changes that may affect this manual. The information will help you in doing your job better and will help in keeping you advised of the latest changes to this manual. Also refer to DA PAM 310-1 Consolidated Index of Army Publications and Blank Forms, and Appendix A, References, of this manual.

DESTRUCTION OF ARMY MATERIEL TO PREVENT ENEMY USE

Refer to TM 750-244-6, Procedures for Destruction of Tank-Automotive Equipment to Prevent Enemy Use.

PREPARATION FOR STORAGE OR SHIPMENT

Requirements for packaging and administrative storage are contained in Chapter 4.

REPORTING EQUIPMENT IMPROVEMENT RECOMMENDATIONS (EIR'S)

If your trailer needs improvement, let us know. Send us an EIR. You, the user, are the only one who can tell us what you don't like about your equipment. Let us know why you don't like the design. Put it on an SF 368 (Product Quality Deficiency Report). Mail it to us at: Commander, U.S. Army Tank-Automotive Command, ATTN: AMSTA-MP, Warren, MI 48397-5000. We'll send you a reply.

Section II. EQUIPMENT DESCRIPTION AND DATA

EQUIPMENT CHARACTERISTICS, CAPABILITIES, AND FEATURES

CHARACTERISTICS

The M146 semitrailer is designed to be pulled by a truck tractor equipped with a fifth wheel and to provide quarters for shop equipment.

The semitrailer has four wheels mounted on a single axle with two landing gear legs for parking.

There is an air over hydraulic service brake system for this semitrailer.

CAPABILITIES AND FEATURES

The semitrailer is designed to haul equipment of up to 6 tons (5.44 metric tons (mton)) cross-country and 8 tons (7.26 mton) on the highway.

There is a van-type body attached to the frame of this semitrailer with both a 24-volt and 110-volt electrical system. There are electrical receptacles inside the van body which run off the 110-volt system. The 110-volt system receives its power from an outside source.

LOCATION AND DESCRIPTION OF MAJOR COMPONENTS

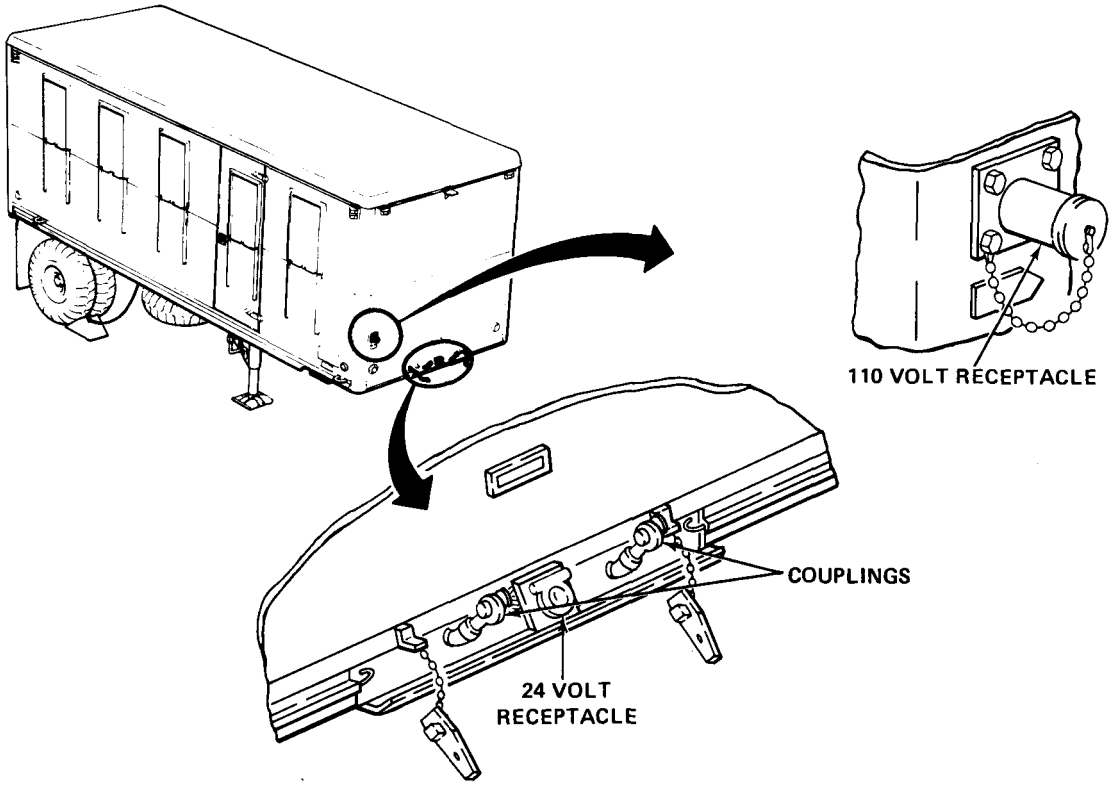

Combinations of 24 volts direct current (vdc) and 110 volts alternating current (vac) systems may vary on the early and late model M146 semitrailer.

The M146 semitrailer is equipped with a van body which has the 110-volt and 24-volt electrical receptacles located at the front along with the airbrake couplings. The 110-voit receptacle receives power from an outside source for inside lights and wall receptacles. The 24-volt receptacle receives power from the towing vehicle for outside and inside lighting. The airbrake couplings connect the semitrailer and the towing vehicle's brake systems. TA231188

LOCATION AND DESCRIPTION OF MAJOR COMPONENTS - CONTINUED

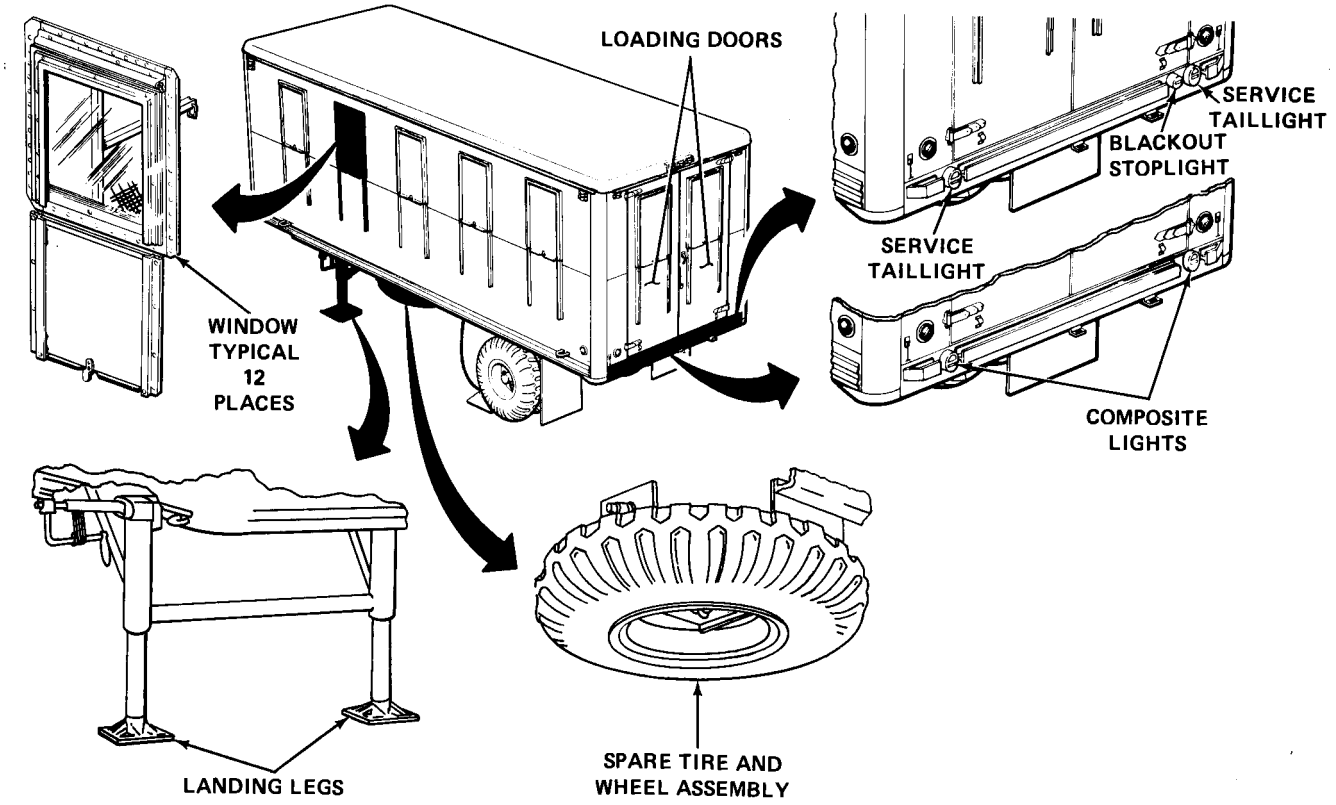

The two-speed manual landing gear legs are operated separately. They are used to support and level the front end of the semitrailer when not coupled.

The spare tire and wheel assembly is located under the right rear portion of the frame. It is mounted to a winch designed so that the spare wheel does not have to be lifted by hand.

There are two loading doors at the rear of the semitrailer. The van body is equipped with twelve windows, five on either side and two in the back. The windows have blackout panels and screens.

There are two service taillights located at each lower rear corner with a blackout stoplight on the lower right rear corner. Some semitrailers may have two composite lights in place of the service taillights and blackout stoplight.

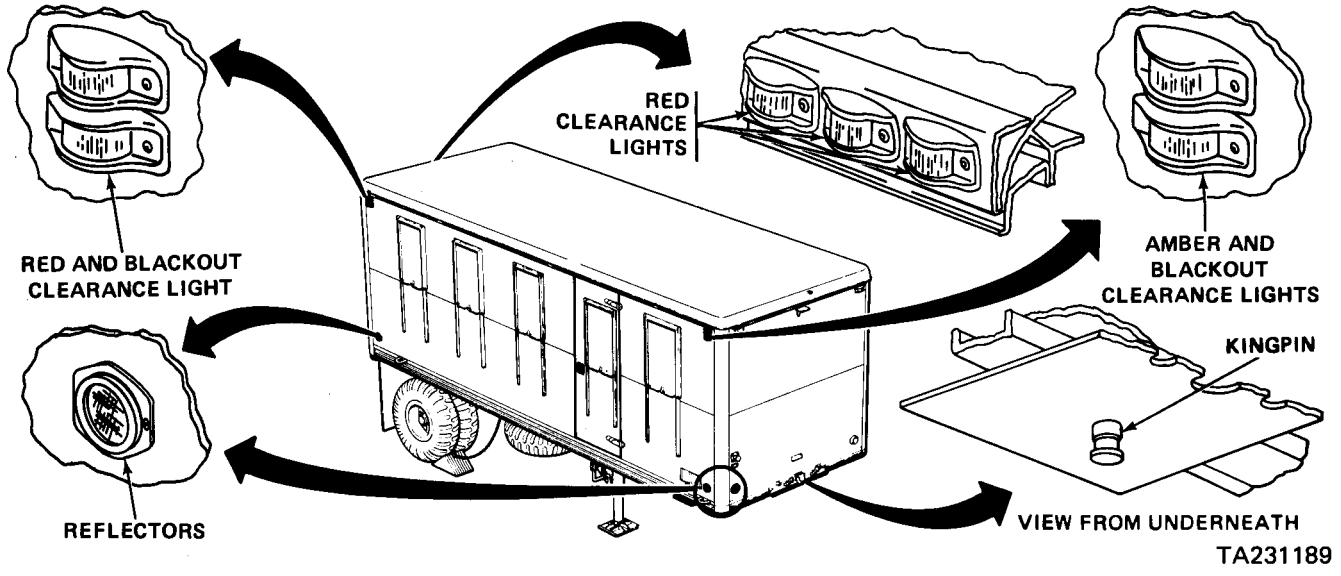

TA231189

LOCATION AND DESCRIPTION OF MAJOR COMPONENTS – CONTINUED

A kingpin extends below the bolster plate. It fits into the truck tractor fifth wheel lower plate for towing the semitrailer.

An amber service clearance light is located on the upper front corner of each side of the semitrailer body with a blackout clearance light directly below it.

A red service clearance light is located on the upper rear corner of each side of the semitrailer body with a blackout clearance light directly below it.

A red reflector is located at each lower front and rear corner of the semitrailer. An amber reflector is located at each lower side corner of the semitrailer.

With the late model, three red clearance lights appear at the top rear middle of the van body.

Combinations of 24 volt dc and 110 volt ac systems may vary on the early and late model M146 semitrailer.

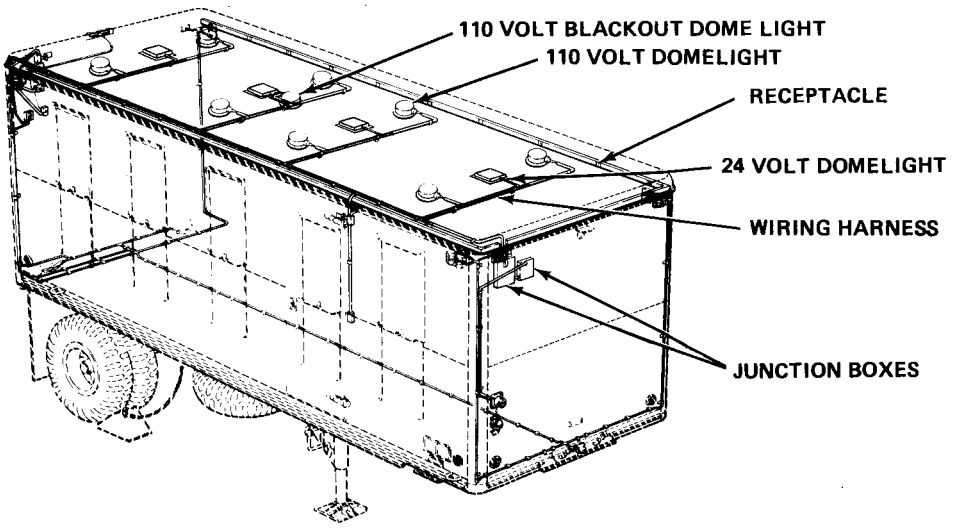

The early model has seven domelights, one blackout domelight and sixteen receptacles that run off a 110-volt system inside the semitrailer. The late model has eight domelights, one blackout domelight, and twenty receptacles that run off a 110-volt system inside the semitrailer. The semitrailer wiring harness for the 110-volt system lies behind the paneling in the front and top of the van body. Two junction boxes inside the body control the flow of 110-volt current into the system.

The inside has four 24-volt domelights with both blackout and regular lights.

TA231190

LOCATION AND DESCRIPTION OF MAJOR COMPONENTS - CONTINUED

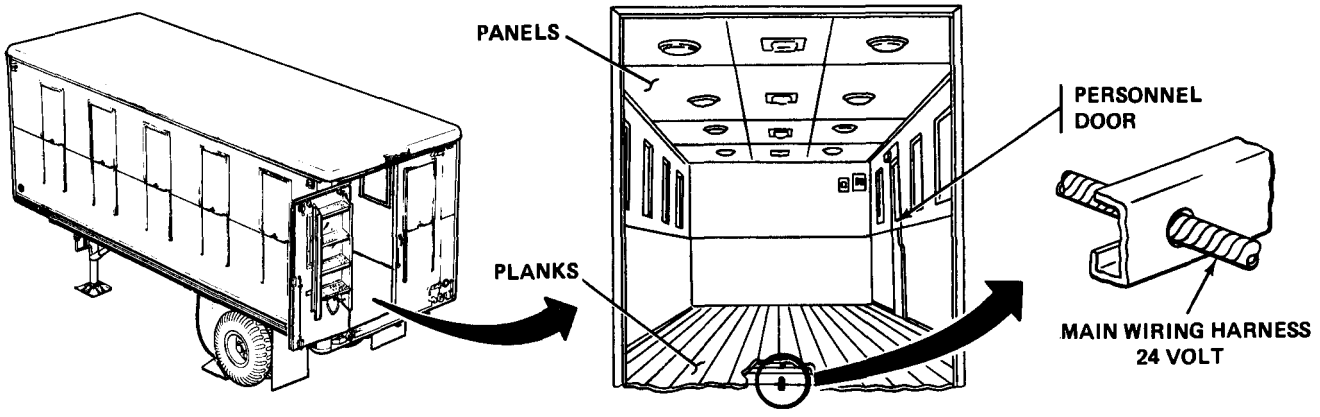

The deck is made up of slotted wood planks screwed into the crossbeams of the chassis.

The inside of the van body is lined with plywood panels screwed into metal brackets.

A personnel door is located on the right side of the semitrailer body.

The 24-volt wiring harness is located below the deck running through the chassis crossbeams.

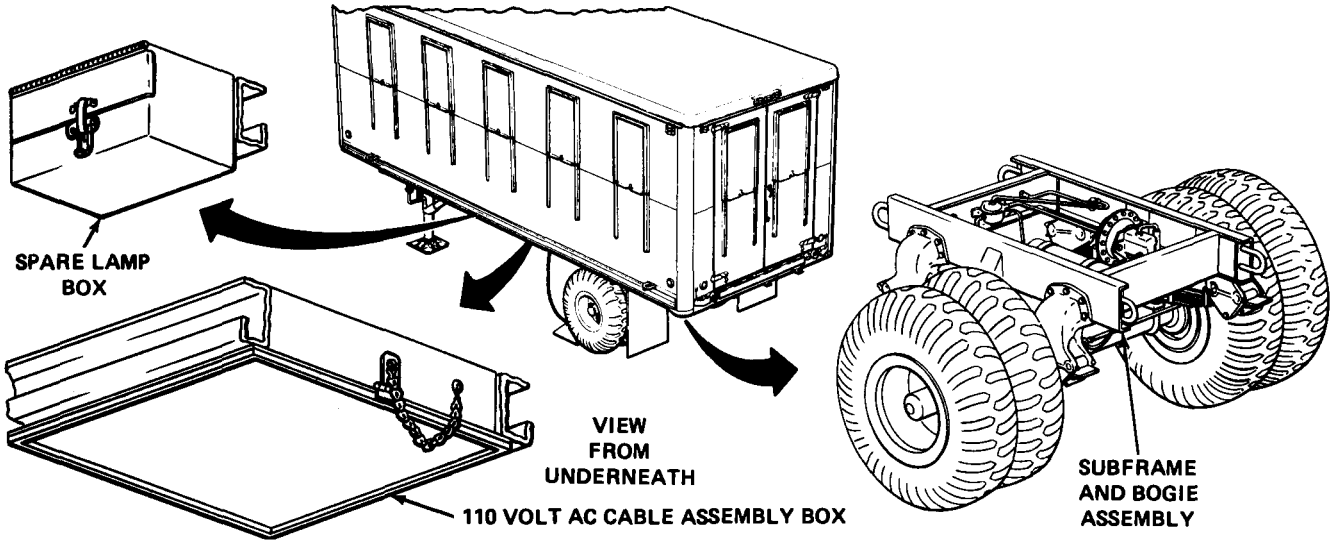

The rear of the semitrailer is mounted on a removable subframe and bogie assembly. The subframe has four wheels on a single axle with a leaf spring suspension.

Stowage boxes for spare lamps and the 110-volt cable assembly are mounted to the bottom of the frame on the left side of the semitrailer.

TA231191

LOCATION AND DESCRIPTION OF MAJOR COMPONENTS - CONTINUED

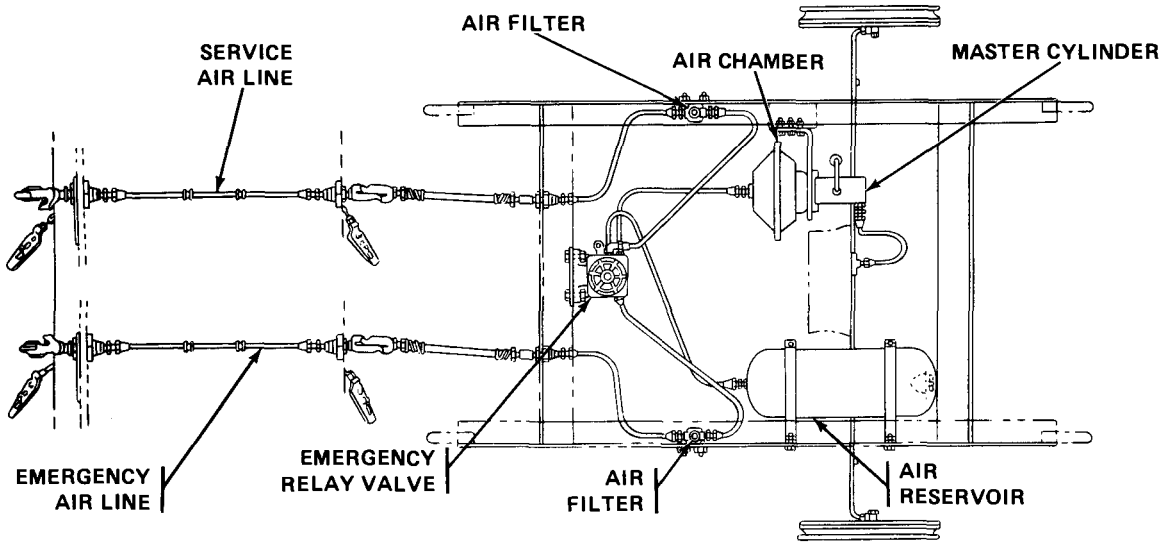

The brake system is mounted to the bottom of the semitrailer through the frame. The air filters, emergency relay valve, air chamber, master cylinder, and air reservoir are located to the rear of the semitrailer within the subframe. Service air lines and emergency air line carry air to the brake system from the towing vehicle.

LOCATION OF DATA PLATES

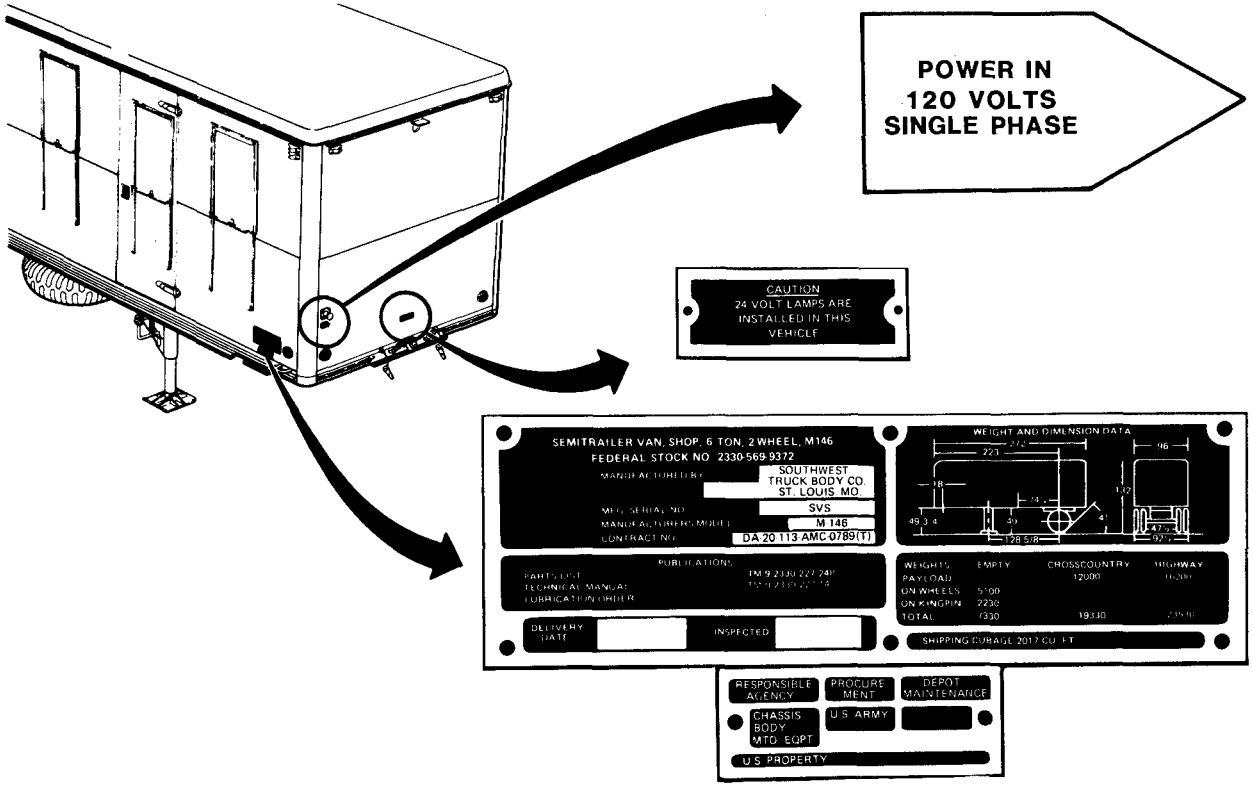

TA231192

EQUIPMENT DATA

Tabulated Data

Dimensions	
Overall length	
Early M146	275 inches (in) 699 centimeters (cm))
Late M146	268-13/1 6 in (683 cm)
Overall width (travel)	96 in (244 cm)
Overall width (loading position)	
Early M146	132 in (335 cm)
Late M146	131 in (333 cm)
Overall height	
Early M146	132 in (335 cm)
Late M146	131 in (333 cm)
Inside length	264 in (671 cm)
Inside width	90 in (229 cm)
Inside height	76 in (193 cm)
Platform to ground height	
Early M146	54 in (137 cm)
Late M146	56 in (142 cm)
Fifth wheel to ground height	
Early M146	49 1/2 in (126 cm)
Late M146	48 3/4 in (124 cm)
Ground clearance (midship)	
Early M146	14 in (36 cm)
Late M146	12 in (30 cm)
Ground clearance (under axle)	
Early M146	14 in (36 cm)
Late M146	16 1/2 in (42 cm)
Tread	70 in (178 cm)
Fording depth	56 in (142 cm)
Angle of departure	
Early M146	450
Late M146	490
Weights	
Maximum payload	
Cross country	6 tons (5.4 mton)
Highway	8 tons (7.3 mton)
On wheels	
Highway	
Early M146	14,000 pounds (lb) maximum (max) (6,356 kilograms (kg))
Late M146	14,824 lb max. (6,730 kg)
On kingpin	
Early M146	8,000 lb max. (3,632 kg)
Late M146	8,706 lb max. (3,953 kg)
Total empty	7,330 lb (3,328 kg)
Total cross-country with maximum payload M146	19,330 lb (8,776 kg)
Total highway with maximum payload M146	23,530 lb (10,683 kg)

EQUIPMENT DATA - CONTINUED

Tabulated Data - Continued

Shipping Cubage	2021.7 cubic feet (cu ft) (56.6 cubicmeters (m^3))
Towing Vehicle	2 1/2 ton, 6x6 (2.27 mtons)
Maximum Towing Speed	
Cross country M146	30 miles per hour (mph) (48 kilometers per hour (km/h))
Highway	50 mph (80 km/h)
Tire Pressure	
Highway driving	50 pounds per square inch (psi) (345 kilopascals (kPa))
Cross country driving	35 psi (241 kPa)
Sand driving	15 psi (103 kPa)

Section III. PRINCIPLES OF OPERATION

AIR OVER HYDRAULIC BRAKE SYSTEM

Towing vehicle air pressure is sent through the emergency air line to the emergency relay valve and then to the air reservoir. When towing vehicle brakes are applied, air is sent through the service air line to the emergency relay valve. The relay valve then releases air from the reservoir to the air chamber. Air pressure behind the chamber diaphragm pushes the piston in the master cylinder which forces hydraulic fluid through the lines to the brake cylinders. The cylinders force the brakeshoes against the brakedrum. Brakeshoe and drum friction slows, stops, and holds the semitrailer until the brake pedal is released, allowing applied air to vent.

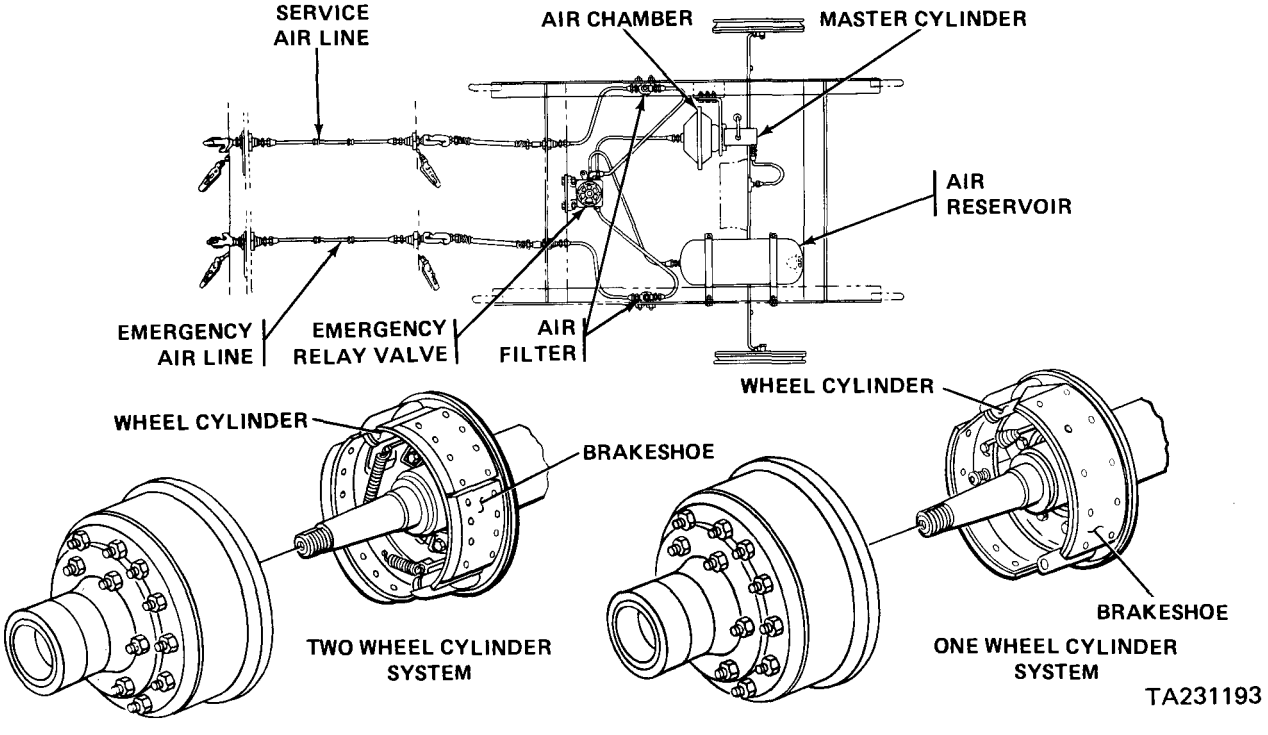

AIR OVER HYDRAULIC BRAKE SYSTEM - CONTINUED

EMERGENCY RELAY VALVE controls the flow of air from the towing vehicle to the different parts of the semitrailer braking system. It speeds brake application by releasing air from the air reservoir on the semitrailer directly to the brake air chamber. This valve controls the flow of air to and from the semitrailer air reservoir and automatically applies the brakes if the semitrailer breaks away from the truck tractor or if there is a serious leak in the emergency air line. The emergency relay valve allows applied air to vent through its exhaust port.

WHEEL BRAKE MECHANISM involves an air chamber attached to a hydraulic master cylinder which provides the means of converting the energy of compressed air into the hydraulic pressure necessary to operate the semitrailer wheel brakes. The wheel brake mechanism is located within the brakedrum. When the brakes are applied, the wheel cylinder pistons apply equal pressure against each brakeshoe. As the shoe linings come into contact with the drum, friction develops. The rotation of the drum pulls the shoes against the drum surface to add to the hydraulic force acting on the shoes and produces additional braking action. Springs pull shoes away from the drum when pressure is released.

ELECTRICAL SYSTEM

This shop van semitrailer is equipped with two separate electrical systems. One is a 24-volt system, the other is a 110-volt system. The 24-volt system receives its power from the towing vehicle through an intervehicular connector which attaches to a receptacle at the front of the semitrailer. The 110-volt system receives its power from an outside source, and its receptacle is located at the right front of the semitrailer.

24-VOLT SYSTEM - EARLY AND LATE M146

The 24-volt system has a single wire harness which leads from the receptacle to the lights.

SERVICE CLEARANCE LIGHTS are located on the upper corners of the right and left sides of the van body for the early M146. The late M146 has additional clearance lights located on the upper front and rear corners, with three mounted on the top middle of the rear of the van body. They go on when either the towing vehicle clearance lights or service lights are turned on. They go off automatically when the blackout lights are turned on.

CLEARANCE BLACKOUT LIGHTS are directly below the service clearance lights. They goon only when the blackout light switch in towing vehicle is turned on.

TAIL, TURN, STOP, AND BLACKOUT LIGHTS appear at the rear of the semitrailer. There are two service taillights at each rear corner of the semitrailer containing three lamps. One lamp functions as a taillight when the service lights are turned on, and one lamp functions as both turn and stoplight.

One lamp functions as a blackout light when the blackout light switch is turned on. The blackout stop light is located on the right rear corner of the semitrailer. The blackout lights automatically turn off the tail, stop, turn, and clearance lights if both switches are on at the same time.

Some semitrailers may have composite light assemblies which control stop, tail, turn, blackout tail, and blackout stop with four lamps in one housing.

ELECTRICAL SYSTEM - CONTINUED

INSIDE DOMELIGHTS appear on the ceiling inside the van body. A master switch controls power to all of them, and each domelight has its own independent switch. The lights can be either on, off, or in a blackout condition.

NOTE

The diagrams for each 24-volt system configuration of the M146 model can be found on page 4-78.

110-VOLT SYSTEM - EARLY M146

The 110-volt system has a single wire harness which leads from the outside receptacle through two junction boxes to the lights and inside receptacles.

JUNCTION BOXES on the front wall contain two main circuit breakers and four branch circuit breakers. There is a separate circuit for each group of wall receptacles and one for the lights. There is one circuit not used.

WALL RECEPTACLES are located on the right and left wall of the van body at the top. Eight receptacles appear on each side. Separate circuit breakers control the right and left side receptacles.

DOMELIGHTS are mounted to the ceiling. There are two rows of four lights including one blackout light for a total of eight domelights. The lights automatically come on when the power source is connected. When either blackout switch is on, the door switches automatically shut off the domelights and turn on the blackout domelight when any door is opened.

110-VOLT SYSTEM - LATE M146

JUNCTION BOXES on the front wall contain two main circuit breakers and four branch circuit breakers. There is a separate circuit for each group of wall receptacles and one for the lights. There is one circuit not used.

WALL RECEPTACLES are located on the right and left wall of the van body at the top. Ten receptacles appear on each side. Separate circuit breakers control the right and left side receptacles.

DOMELIGHTS are mounted to the ceiling. There are two rows of four lights with a blackout light in the middle for a total of nine domelights. The lights are controlled by on/off switches and blackout wall and door switches. When the blackout switch is on, the door switches automatically shut off the domelights and turn on the blackout domelight when either door is opened.

NOTE

The diagrams for each 110-volt system configuration of the M146 Model can be found on page 4-79.

CHAPTER 2

OPERATING INSTRUCTIONS

OVERVIEW

This chapter shows and describes the semitrailer controls and contains operator/crew level preventive maintenance procedures. There are instructions for coupling, driving, stopping and backing in both usual and unusual conditions. Other information is also provided to help you understand and better operate the vehicle.

Section I. DESCRIPTION AND USE OF OPERATOR'S CONTROLS AND INDICATORS

KINGPIN

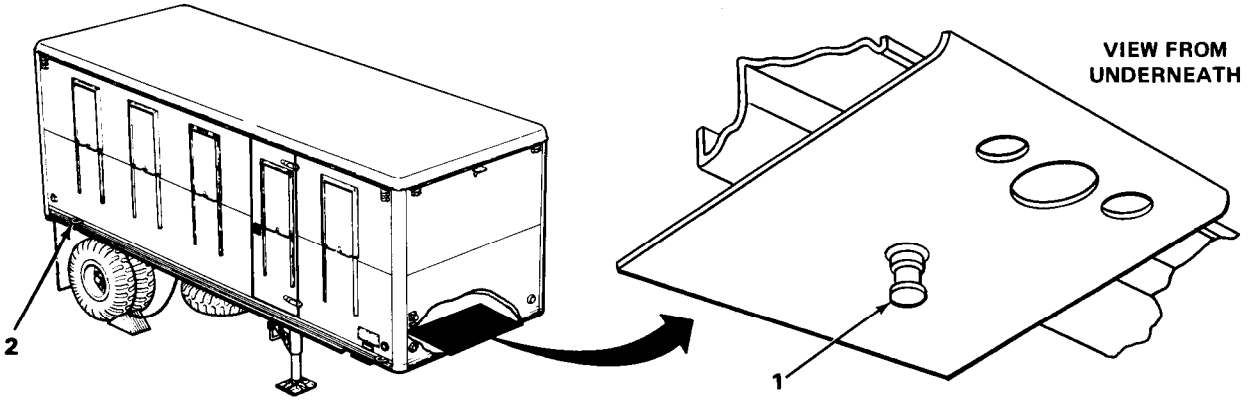

KEY	CONTROL OR INDICATOR	FUNCTION OR USE
1	Kingpin	Used to connect the semitrailer to the towing vehicle by attaching to the fifth wheel.
2.	Lifting/tiedown eyes (8)	Used to lift and tie down semitrailer when shipped.

TA231194

DESCRIPTION AND USE OF OPERATOR'S CONTROLS AND INDICATORS - CONTINUED

SPARE TIRE AND WHEEL CARRIER

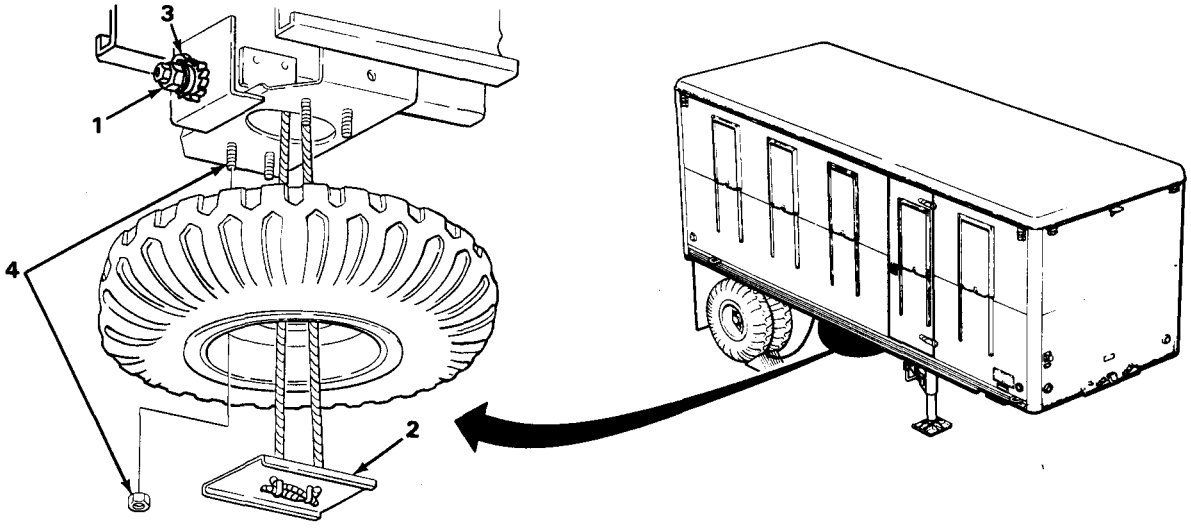

KEY	CONTROL OR INDICATOR	FUNCTION OR USE
1	Rachet wheel	Raises or lowers spare tire and wheel assembly depending on which way it is turned. Located under right side, center of the semitrailer.
2	Lifting plate	Attaches to the spare wheel and cable for lifting.
3	Pawl	Latches in ratchet to prevent shaft from spinning.
4	Four bracket studs and nuts	Spare tire and wheel assembly mounting hardware.

LANDING GEAR

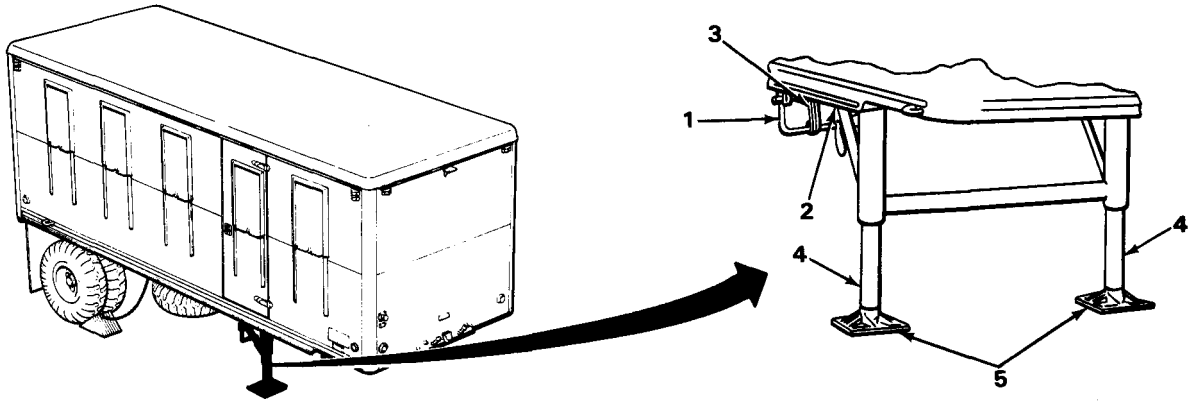

TA231195

DESCRIPTION AND USE OF OPERATOR'S CONTROLS AND INDICATORS - CONTINUED

LANDING GEAR - CONTINUED

KEY	CONTROL OR INDICATOR	FUNCTION OR USE
1	Two cranks	Operate the landing gear. Turning the crank clockwise lowers the landing gear; counterclockwise raises the landing gear. Push in for high speed, and pull out for low speed. Located under the front of the semitrailer right and left sides.
2	Two gearboxes	Operated by the crank. Moves legs up or down, levels off the front of the semitrailer.
3	Two crank stowage brackets	Stow cranks when cranks are not in use.
4	Two legs	Legs support weight and level off front of semitrailer when extended.
5	Two landing gear shoes	Keep legs from sinking into the ground.

CHOCK BLOCKS

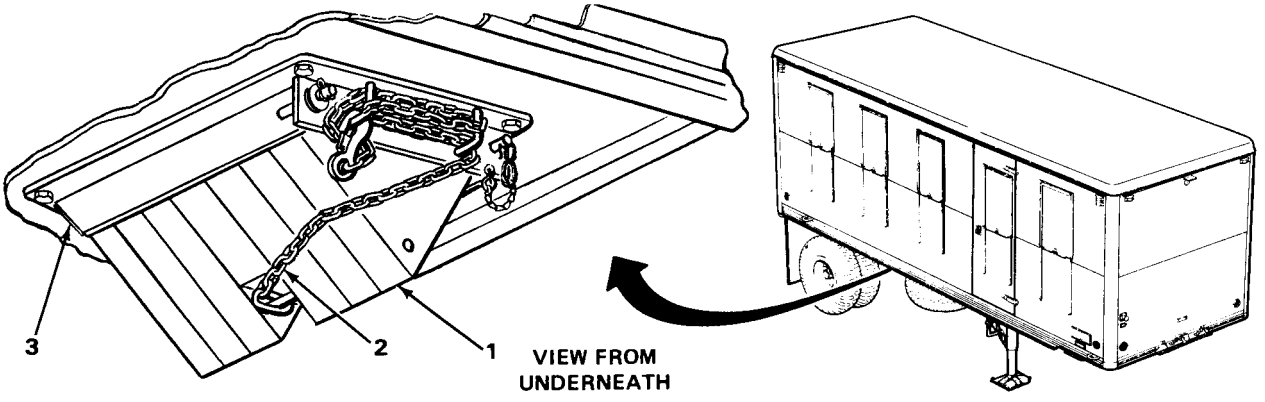

KEY	CONTROL OR INDICATOR	FUNCTION OR USE
1	Two chock blocks	One placed behind or in front of rear tire and wheel assembly on each side of semitrailer to keep it from moving, page 2-25, positioning chock blocks.
2	Two chains	Fasten chock blocks to semitrailer to keep them from being misplaced.
3	Two stowage brackets	Stow the chock blocks when not in use. There is one on each side of semitrailer.

TA231196

DESCRIPTION AND USE OF OPERATOR'S CONTROLS AND INDICATORS - CONTINUED

TRACTOR-TO-SEMITRAILER COUPLINGS AND CONNECTORS

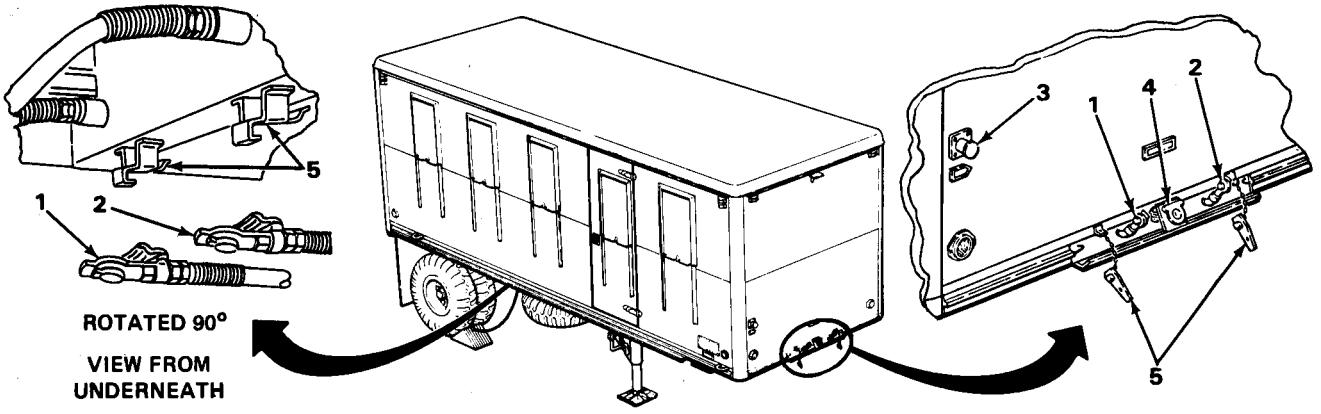

KEY	CONTROL OR INDICATOR	FUNCTION OR USE
1	Three service couplings	Provide the connection between the semitrailer service brake system and the towing vehicle air supply system.
2	Three emergency couplings	Provide the connection between the semitrailer emergency brake system and the towing vehicle air supply system.
3	Electrical connector, 110-volt	Provides connection between the 110-volt semitrailer system and an outside power source. A cover keeps out dirt when the power is disconnected.
4	Electrical connector, 24-volt (Intervehicular cable)	Provides connection between the 24-volt semitrailer system and the towing vehicle's electrical system. A cover keeps out dirt when the cable is disconnected.
5	Six dummy couplings	Cover semitrailer couplings when not coupled to towing vehicle. Keep dirt out of semitrailer lines.

STOWAGE BOXES

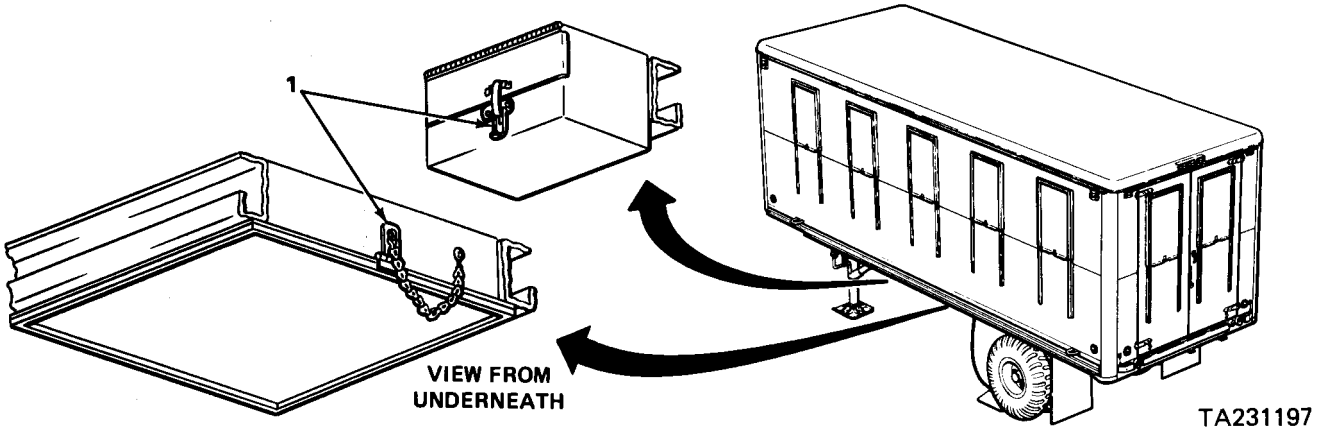

DESCRIPTION AND USE OF OPERATOR'S CONTROLS AND INDICATORS - CONTINUED

STOWAGE BOXES- CONTINUED

KEY	CONTROL OR INDICATOR	FUNCTION OR USE
1	Two door latches	Bracket on each box flips over eye latch to hold door closed.

AIR RESERVOIR

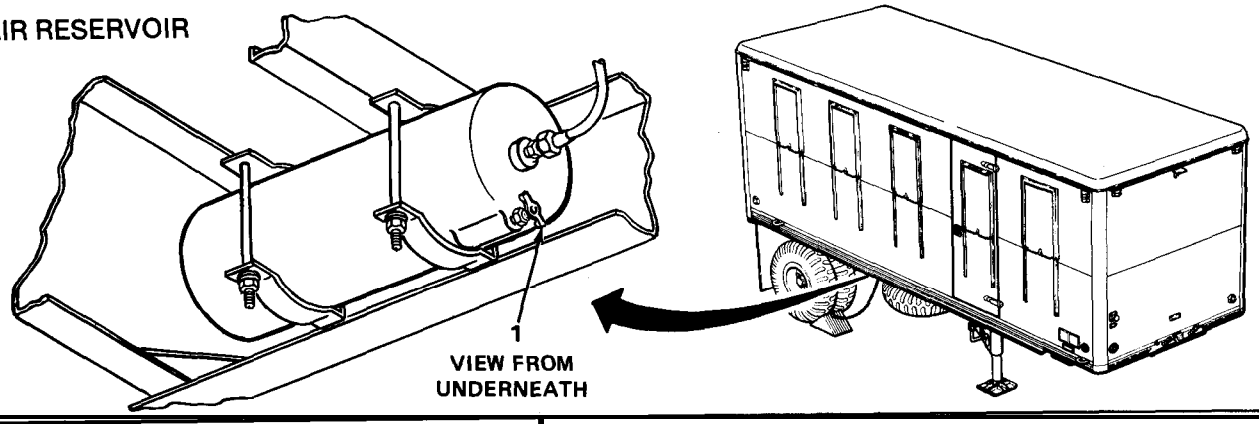

KEY	CONTROL OR INDICATOR	FUNCTION OR USE
1	Reservoir draincock	Used to drain moisture and/or air from semitrailer brake system. Located near right rear tire.

MUD PLATES

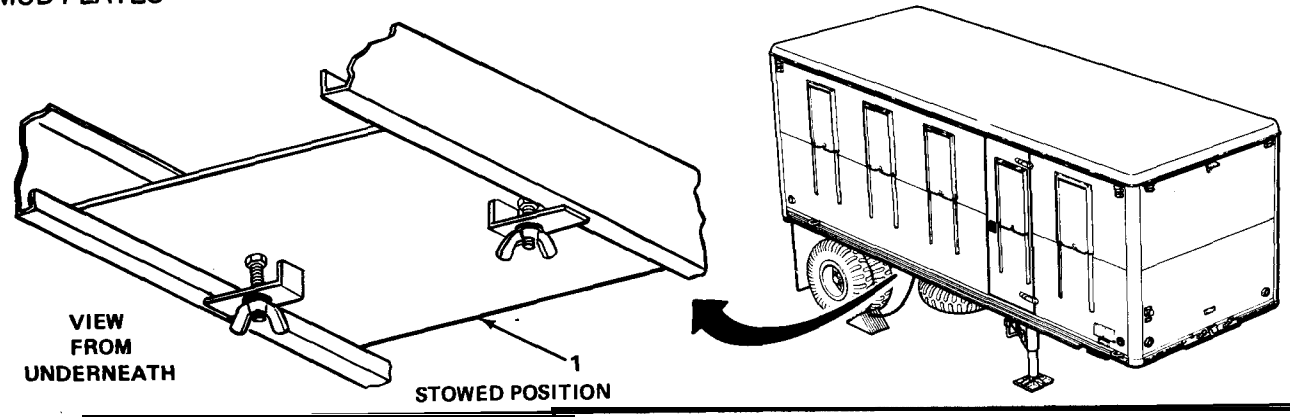

KEY	CONTROL OR INDICATOR	FUNCTION OR USE
1	Two mud plates	Attach to landing gear shoes to prevent sinking in muddy or sandy ground. Located under semitrailer left and right side.

TA231198

DESCRIPTION AND USE OF OPERATOR'S CONTROLS AND INDICATORS - CONTINUED

SIDE AND REAR DOORS AND DOOR LADDERS

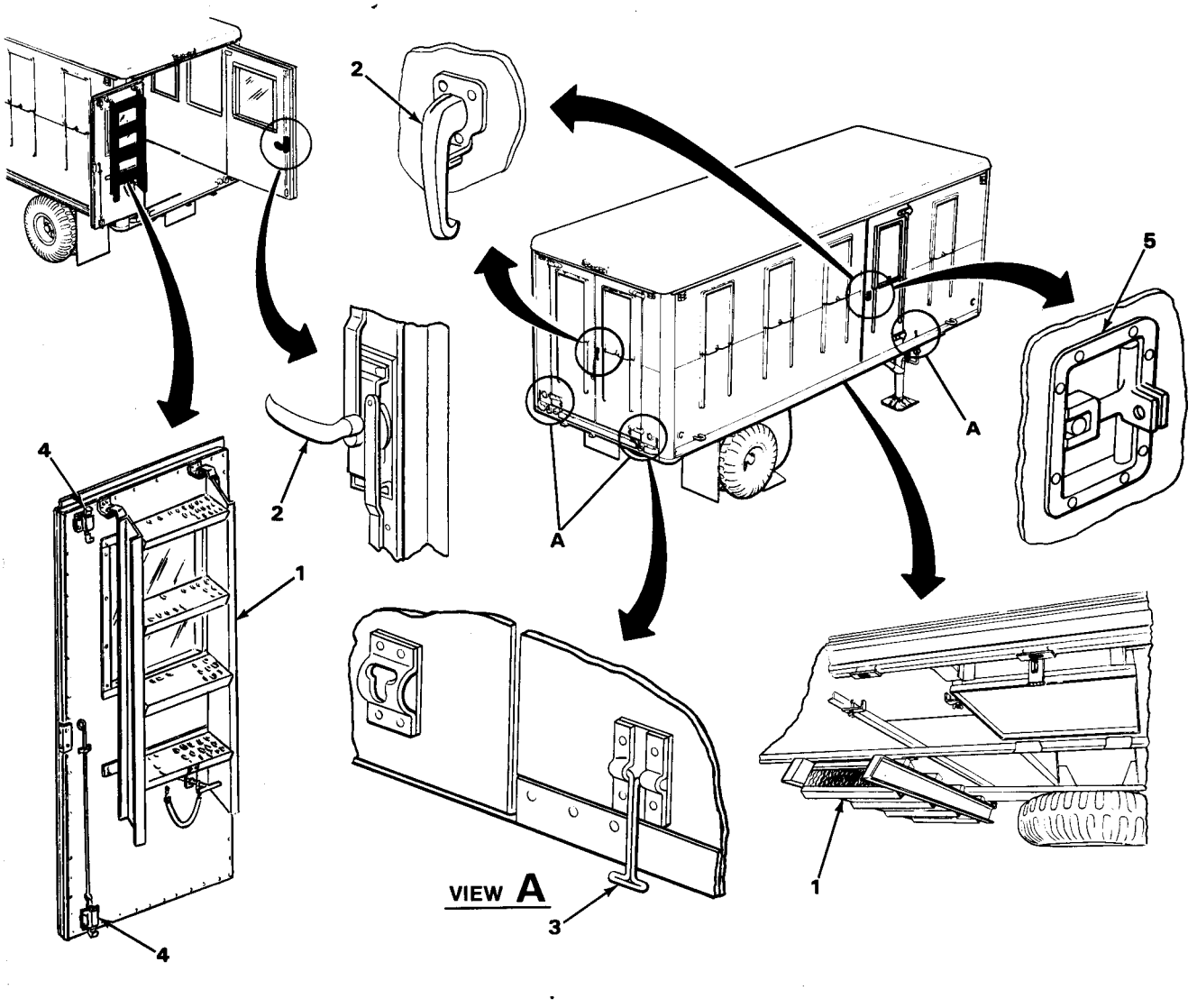

KEY	CONTROL OR INDICATOR	FUNCTION OR USE
1	Two door ladders	Used to climb in and out of van body, open and close blackout window panels. One is under right side of semitrailer, the other is mounted on inside of left loading door.
2	Two door handles	When turned, they release inside latches which allow the door to open. Personnel door handle is pulled out before turning.

TA231199

DESCRIPTION AND USE OF OPERATOR'S CONTROLS AND INDICATORS - CONTINUED

SIDE AND REAR DOORS AND DOOR LADDERS - CONTINUED

KEY	CONTROL OR INDICATOR	FUNCTION OR USE
3	Three tee latches	Fit in bracket on van body to hold doors open.
4	Two inside latches	When pulled up and down, left rear loading door is allowed to open. Located inside left rear loading door only.
5.	Tee handle	Open personnel door from outside.

WALL AND DOOR WINDOWS

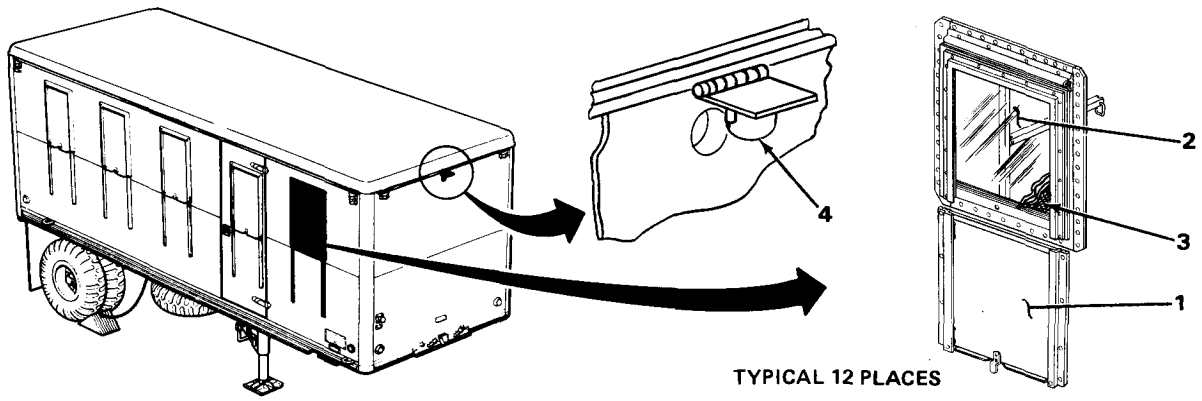

KEY	CONTROL OR INDICATOR	FUNCTION OR USE
1	Twelve blackout panels	Slide over windows to prevent light from escaping. Located on van body.
2	Twelve windows	Allow light to enter semitrailer, swing open so air can flow through van body. Controlled by inside latch located on van body. Door windows do not open.
3	Nine screens	One at every window except for door windows. Allow air to flow through van body and keep unwanted materials out when windows are opened.
4	Air vent	Vents air through the van body top. Located at the front, top middle of the van body. Controlled by a hinged door on the outside and a metal plate on the inside.

TA231200

DESCRIPTION AND USE OF OPERATOR'S CONTROLS AND INDICATORS - CONTINUED

ELECTRICAL SYSTEMS CONTROLS

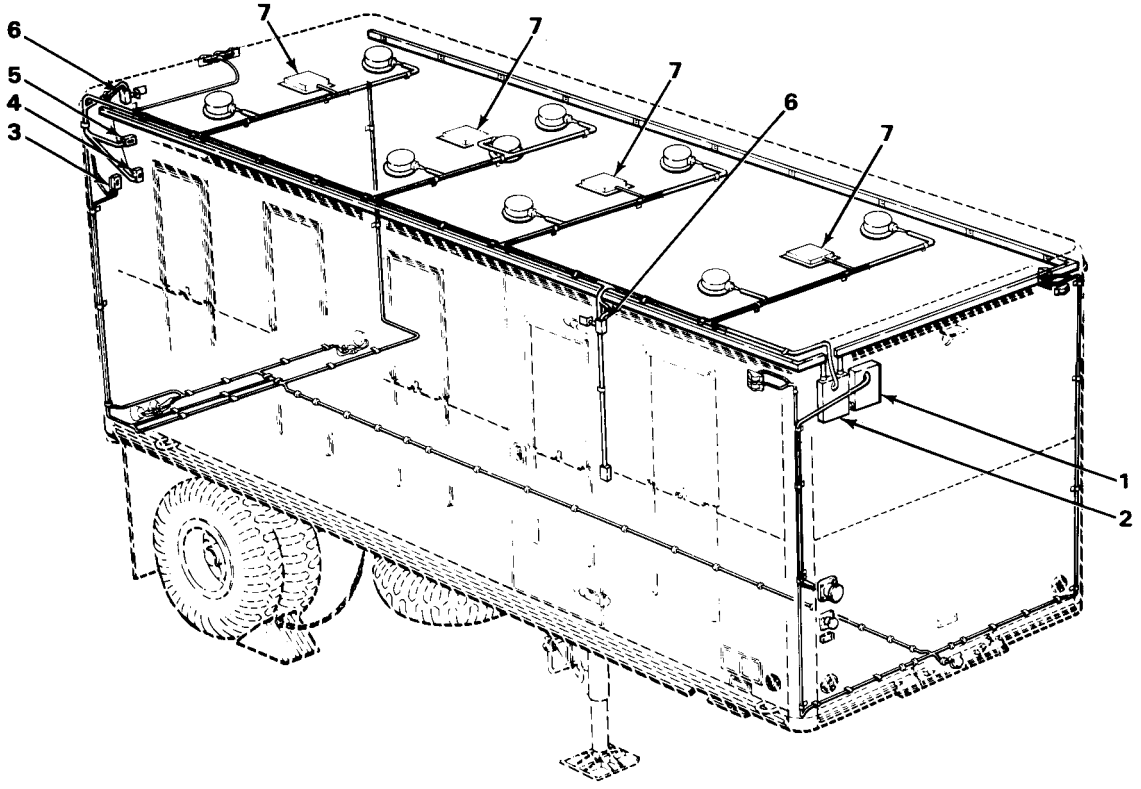

KEY	CONTROL OR INDICATOR	FUNCTION OR USE
1	MAIN junction box	Used to control the electricity to the 110-volt branch junction box circuits. Pushing in the two circuit breakers will turn them on or off.
2	Branch junction box	Used to control the electricity to the individual 110-volt circuits. Pushing in the four circuit breakers will turn them on or off.
3	AC LIGHTS Switch	Controls the power to the late model 110-volt lights.
4	DC LIGHTS Switch	Controls the power to the 24-volt lights.
5	BLACKOUT switch	Overrides the 110-volt system to turn on blackout light when doors are opened.
6	Two door switches	Switches lights to blackout light when doors are open and blackout switch is on.
7	Four 24-volt domelight switches	Operate each 24-volt domelight independently. Have ON, OFF, or blackout positions.

TA231201

Section II. OPERATOR/CREW PREVENTIVE MAINTENANCE CHECKS AND SERVICES (PMCS)

GENERAL

This section contains instructions for performing Operator/Crew PMCS on the M146 semitrailer shop van. The procedures list checks, services, and criteria to ensure that the shop van is prepared for operation. Perform all checks and services at the specified intervals, keeping in mind the following guidelines:

Before (B) PMCS is done before you operate the vehicle.

During (D) PMCS is done while the equipment and/or its component systems are in operation.

After (A) PMCS is done right after operating the vehicle.

Do your Weekly (W) PMCS weekly.

Always pay attention to the WARNINGS and CAUTIONS.

SPECIAL INSTRUCTIONS

If something doesn't work, troubleshoot it with the instructions in this manual.

Always do your preventive maintenance in the same order so it gets to be a habit. Once you've had some practice, you'll spot anything wrong in a hurry. When you do your preventive maintenance, take along a rag or two.

While performing PMCS, observe WARNING and CAUTION paragraphs preceding those operations which could endanger your safety or result in damage to the equipment.

If anything looks wrong and you can't fix it, write it on your DA Form 2404 and report it to Organizational Maintenance RIGHT AWAY.

WARNING

Drycleaning solvent PD-680 is both toxic and flammable. Avoid prolonged breathing of vapors, and avoid skin contact. Use only in well-ventilated area, and keep away from open flame or excessive heat. Injury to personnel could occur.

Keep the equipment clean. Dirt, grease, oil, and debris only get in the way and may cover up a serious problem. Clean as you work and as needed. Use drycleaning solvent PD-680 to clean metal surfaces. Use soap and water when you clean rubber or plastic material.

SPECIAL INSTRUCTIONS - CONTINUED

Bolts, Nuts, and Screws. Check that they are not loose, missing, bent, or broken. You can't try them all with a tool, of course, but look for chipped paint, bare metal, or rust around boltheads. Tighten any that you find loose.

Welds. Look for gaps where parts are welded together. If you find a bad weld, report it to Organizational Maintenance.

Electric Wires and Connectors. Look for cracked or broken insulation, bare wires, and loose or broken connectors. Tighten loose connectors, and make sure the wires are in good condition.

Hoses and Fluid Lines. Look for wear, damage, and leaks. Make sure clamps and fittings are tight. Wet spots or stains around a fitting or connector can mean a leak. If a leak comes from a loose fitting or connector, tighten it. If something is broken or worn out, either correct it or report it to Organizational Maintenance (refer to Maintenance Allocation Chart, appendix B).

Fluid leaks affect the status of your equipment. The following are definitions of the types/classes of leakage you need to know to be able to determine the status of your equipment. Learn and be familiar with them.

LEAKAGE DEFINITIONS FOR OPERATOR/CREW PREVENTIVE MAINTENANCE CHECKS AND SERVICES (PMCS)

Class I	Seepage of fluid (indicated by wetness or discoloration) not great enough to form drops.
Class II	Leakage of fluid great enough to form drops, but not enough to cause drops to drip from the item being checked/inspected.
Class Ill	Leakage of fluid great enough to form drops that fall from being checked/inspected.

CAUTION

Equipment operation is allowable with minor leakages (Class I or II). Consideration must be given to the fluid capacity in the item/system being checked/inspected. When operating with Class I or II leaks, continue to check fluid levels as required on your PMCS. Class Ill leaks should be reported to Organizational Maintenance.

PMCS COLUMN DESCRIPTION

ITEM NO. - The order that PMCS should be performed, and also used as a source of item numbers for the TM number column on DA Form 2404 Equipment Inspection and Maintenance worksheet when recording results of PMCS.

INTERVAL - Tells when each check is to be performed,

ITEM TO BE INSPECTED - Lists the checks to be performed.

EQUIPMENT IS NOT READY/AVAILABLE IF - Has an entry only when the semitrailer should not be operated or accepted with that problem.

OPERATOR/CREW PREVENTIVE MAINTENANCE CHECKS AND SERVICES (PMCS)

B - BEFORE D - DURING A - AFTER W - WEEKLY

ITEM NO.	INTERVAL B	D	A	W	ITEM TO BE INSPECTED PROCEDURE: CHECK FOR AND HAVE REPAIRED, FILLED, OR ADJUSTED AS NEEDED	EQUIPMENT IS NOT READY/AVAILABLE IF:
					NOTE Perform weekly(W) as well as before (B) PMCS if: a. You are the assigned operator but have not operated the vehicle since the last weekly inspection. b. You are operating the vehicle for the first time.	
					GENERAL	
	•				a. Check for damage or broken parts around and inside the semitrailer (1).	
		●			b. Be alert for unusual noises or abnormal conditions that might indicate load shifting or defective performance.	Any unusual noises or abnormal operation.

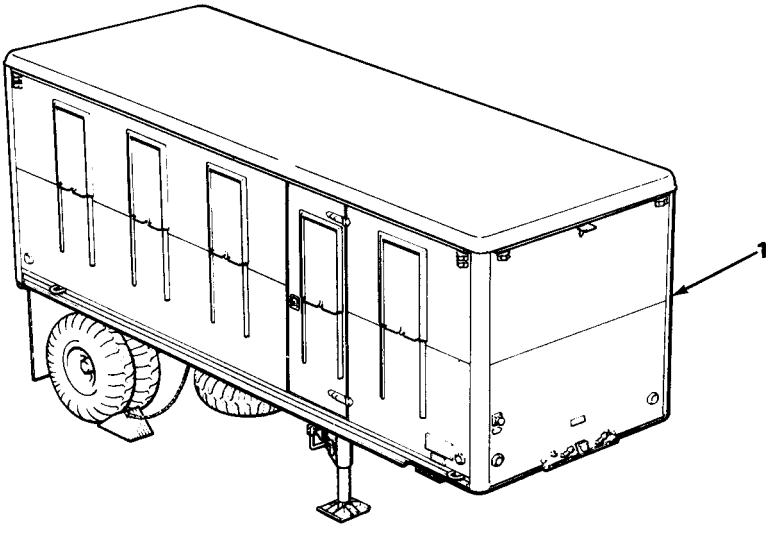

TA231202

OPERATOR/CREW PREVENTIVE MAINTENANCE CHECKS AND SERVICES (PMCS) - CONTINUED

B - BEFORE D - DURING A - AFTER W – WEEKLY

ITEM NO.	INTERVAL B	D	A	W	ITEM TO BE INSPECTED PROCEDURE: CHECK FOR AND HAVE REPAIRED, FILLED, OR ADJUSTED AS NEEDED	EQUIPMENT IS NOT READY/AVAILABLE IF:
2					LIGHTS AND REFLECTORS	
					NOTE	
					An assistant is required while checking the brake lights. If the tactical situation permits, connect the truck tractor electrical cable and brake lines to the semitrailer (page 2-18).	
	Ž				a. Operate the light switches to check lights (page 2-22).	Light assemblies do not work.
				●	b. Check for damaged or missing reflectors (1) and light assemblies (2).	Light assemblies are damaged or missing.
				•	c. Visually inspect electrical wiring for cuts, breaks, or other damage.	

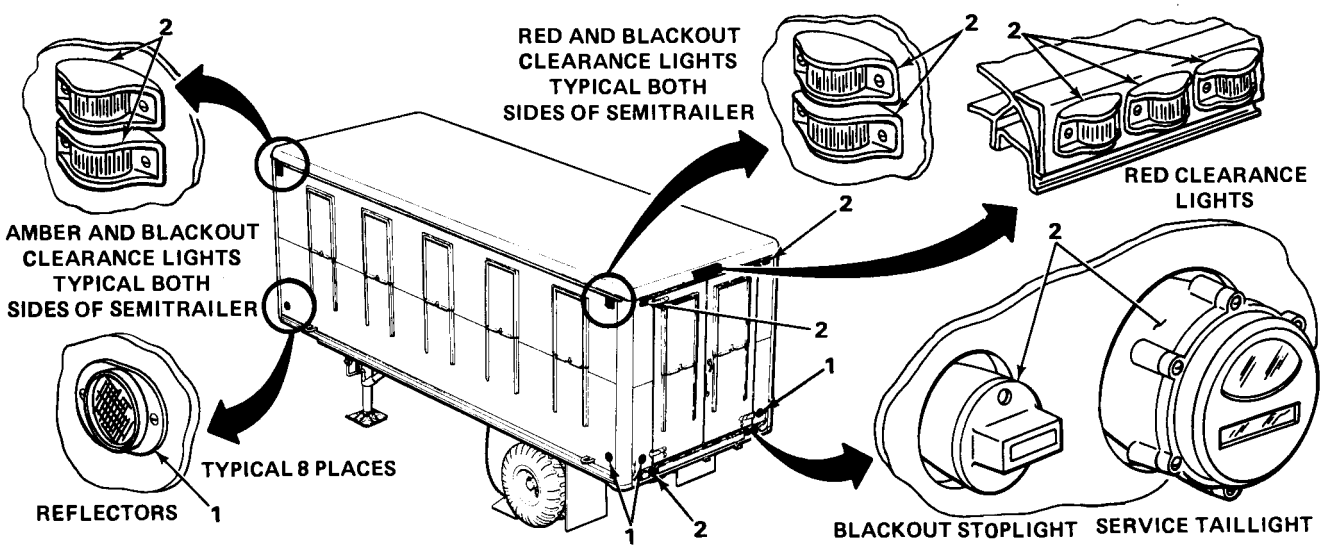

TA231203

OPERATOR/CREW PREVENTIVE MAINTENANCE CHECKS AND SERVICES (PMCS) - CONTINUED

B - BEFORE D - DURING A - AFTER W - WEEKLY

ITEM NO.	INTERVAL B	D	A	W	ITEM TO BE INSPECTED PROCEDURE: CHECK FOR AND HAVE REPAIRED, FILLED, OR ADJUSTED AS NEEDED	EQUIPMENT IS NOT READY/AVAILABLE IF:
3					AIR RESERVOIR	
	●				a. Visually inspect air reservoir (3) for damage or leaks.	Air reservoir leaking or damaged.
					WARNING Failure to wear protective goggles when opening air reservoir draincock could cause serious eye injury.	
			●		b. Open draincock (4) to drain accumulated moisture. Close draincock (4) before operation.	
4					AIR PRESSURE	
	●				Inspect for leaks in the airbrake system by stopping the engine in towing vehicle when air pressure is fully charged, and note any change on the air pressure gage within one minute.	Airbrake system leaking, pressure is low.

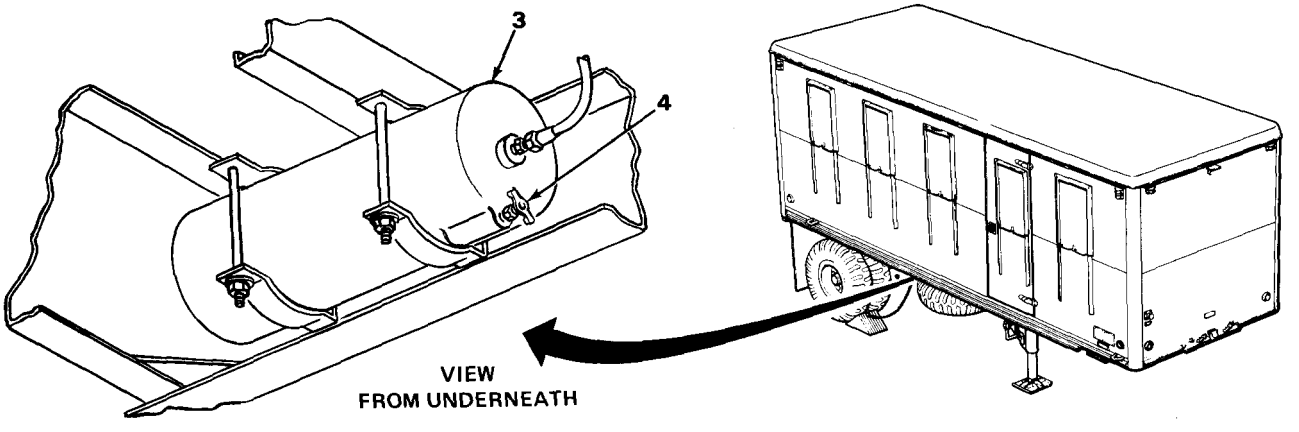

TA231204

OPERATOR/CREW PREVENTIVE MAINTENANCE CHECKS AND SERVICES (PMCS) - CONTINUED

B - BEFORE D - DURING A - AFTER W - WEEKLY

ITEM NO.	INTERVAL B	D	A	W	ITEM TO BE INSPECTED PROCEDURE: CHECK FOR AND HAVE REPAIRED, FILLED, OR ADJUSTED AS NEEDED	EQUIPMENT IS NOT READY/AVAILABLE IF:
	●				a. Check for evidence of leakage of brake fluid on or under semitrailer.	Class Ill leakage is evident.
	●				b. Check airhoses (1) and connections (2) for obvious damage.	Airhose(s) broken or missing.
		•			c. Watch for unusual brake reaction during operation, such as one or more wheels grabbing before others, Listen for air leaks.	Service brakes fail to operate. Air is leaking.
				●	d. Have Organizational Maintenance drain moisture from air filters (3).	

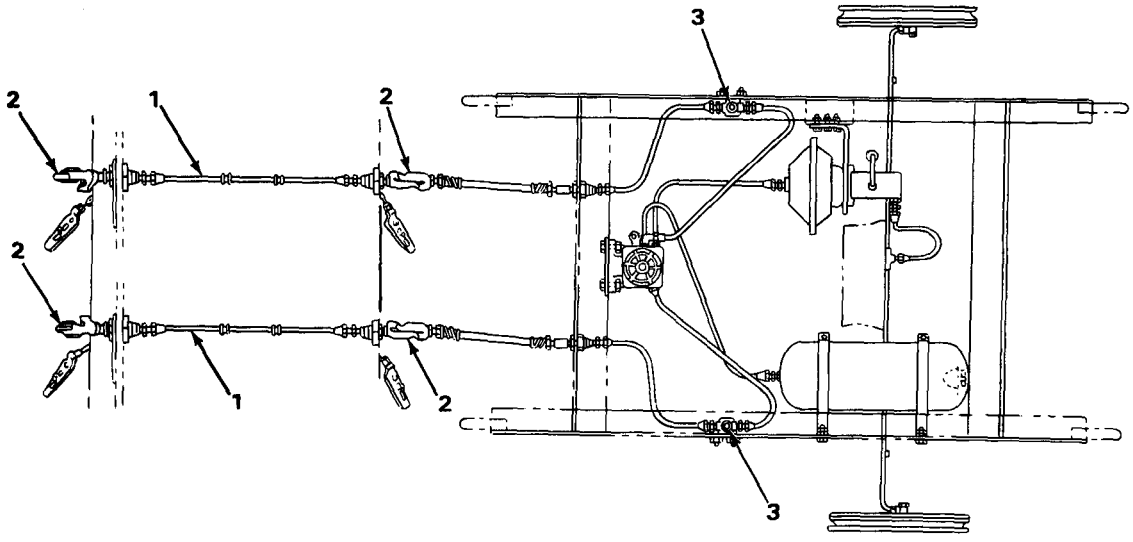

TA231205

OPERATOR/CREW Preventive Maintenance CHECKS AND SERVICES (PMCS) - CONTINUED

B - BEFORE D - DURING A - AFTER W - WEEKLY

ITEM NO.	INTERVAL B	D	A	W	ITEM TO BE INSPECTED PROCEDURE: CHECK FOR AND HAVE REPAIRED, FILLED, OR ADJUSTED AS NEEDED	EQUIPMENT IS NOT READY/AVAILABLE IF:
5					BRAKEDRUM AND HUB **WARNING** When touched, overheated brake drums and hubs can cause severe burns to personnel.	
			•		After operation, cautiously feel brakedrums (4) and hubs (5) for excess heat. **NOTE** Overheated brakedrums or hubs indicate improperly adjusted, defective, or dry wheel bearings, or dragging brakes.	Overheated brakedrum (4) is evident.

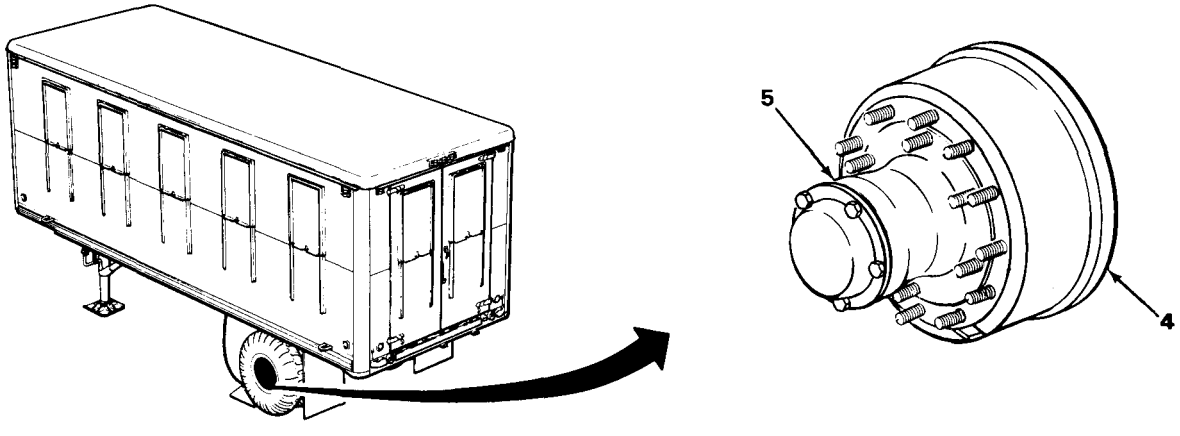

TA231206

OPERATOR/CREW Preventive Maintenance CHECKS AND SERVICES (PMCS) - CONTINUED

B - BEFORE D - DURING A - AFTER W - WEEKLY

ITEM NO.	INTERVAL B	D	A	W	ITEM TO BE INSPECTED PROCEDURE: CHECK FOR AND HAVE REPAIRED, FILLED, OR ADJUSTED AS NEEDED	EQUIPMENT IS NOT READY/AVAILABLE IF:
6					WHEELS	
	Ž				Check wheels (1) for damage and wheel nuts for loose condition and presence.	One or more wheel nuts missing.
7					TIRES	
	Ž				a. Check tires (2) for correct air pressure, Highway 50 pounds per square inch (psi) (345 kilopascals (kPa)) Off road 35 psi (241 kPa) Sand 15 psi (103 kPa)	
	Ž				b. Check tires (2) for deep cuts, foreign objects, or unusual tread wear. Remove stones from between duals and treads.	One or more tires (2) have cuts or abrasions that would result in tire failure during operation.

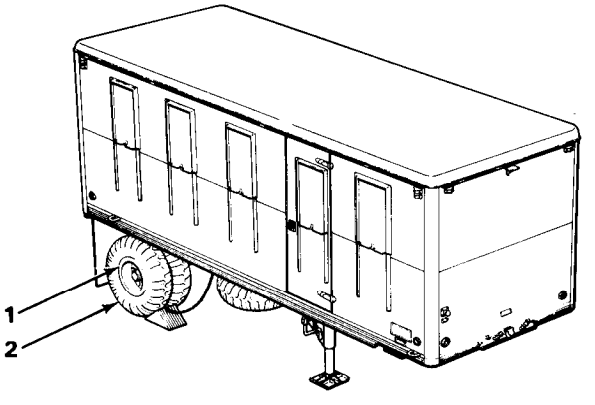

TA231207

OPERATOR/CREW Preventive Maintenance CHECKS AND SERVICES (PMCS) - CONTINUED

B - BEFORE D - DURING A - AFTER W - WEEKLY

ITEM NO.	INTERVAL B	D	A	W	ITEM TO BE INSPECTED PROCEDURE: CHECK FOR AND HAVE REPAIRED, FILLED, OR ADJUSTED AS NEEDED	EQUIPMENT IS NOT READY/AVAILABLE IF:
8					LANDING GEAR	
	•				a. Couple semitrailer to towing vehicle, and inspect crank gear-box (3) and shoes (4) for secure mounting or damage.	Damage is evident that would affect safe operation.
	•				b. Check that crank stow bracket (5) holds crank (6) securely.	
		Ž			c. When cranking landing gear, check both sides to make sure right and left legs (7) move. Check at both high and low speed cranking. Pull out for low speed, and push in for high.	Landing gear does not operate.

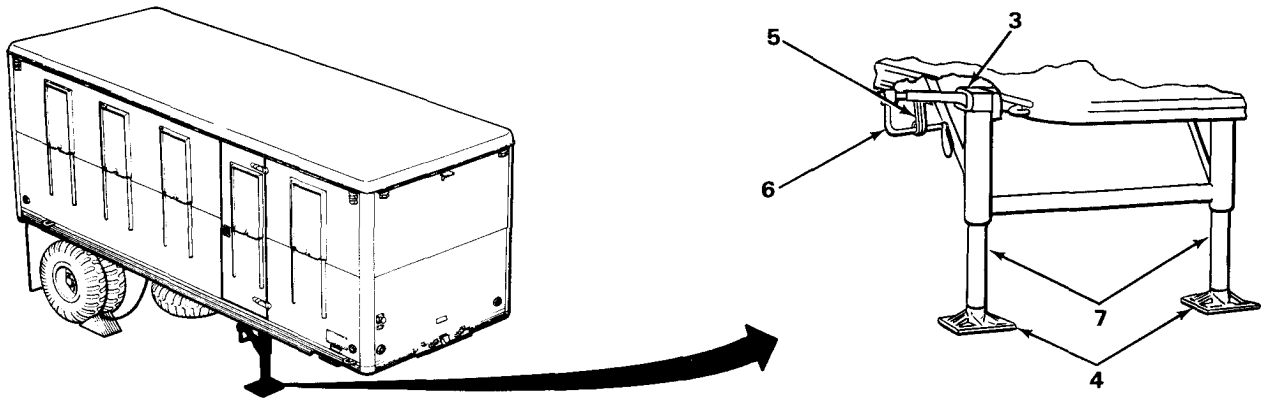

TA231208

Section III. OPERATION UNDER USUAL CONDITIONS

PREPARATION FOR USE

Perform the operator/crew preventive maintenance checks and services in the “Before” column before doing the procedures below.

COUPLING TRUCK TRACTOR AND SEMITRAILER

WARNING

All persons not involved in coupling operation must stand clear of truck tractor and semitrailer to prevent possible injury.

1. Line up truck tractor with semitrailer.

2. Review and perform truck tractor operating procedures to prepare truck tractor for coupling.

3. Slowly back truck tractor into position. Be sure kingpin (1) is in line with fifth wheel jaws (2).

4. Before fifth wheel approach ramps (3) make contact with bolster plate (4), do the following:

   a. Check that bolster plate (4) is above approach ramps (3).

   b. Adjust kingpin (1) height as needed by raising landing gear (5) (page 2-20), or lowering landing gear (5) (page 2-25).

   c. Make sure fifth wheel jaws (2) are open.

   d. Make sure chock blocks (6) are in place (page 2-25).

   e. Remove dummy couplings (7) from semitrailer couplings (8) and (9), and stow on hooks (10).

   f. Connect service air line (11) to right semitrailer couplings (8).

   g. Connect emergency air line (12) to left semitrailer couplings (9).

   h. Check air lines (11) and (12) and electrical cable (13) to be sure they are supported and will not catch or chafe.

   i. Check air reservoir to make sure draincock is closed (page 2-13).

   j. Turn on truck tractor air supply; see Operator’s Manual for towing vehicle.

   k. Apply semitrailer brakes from towing vehicle; see Operator’s Manual for towing vehicle.

5. Slowly back truck tractor until fifth wheel jaws (2) engage kingpin (1).

PREPARATION FOR USE - CONTINUED

COUPLING TRUCK TRACTOR AND SEMITRAILER - CONTINUED

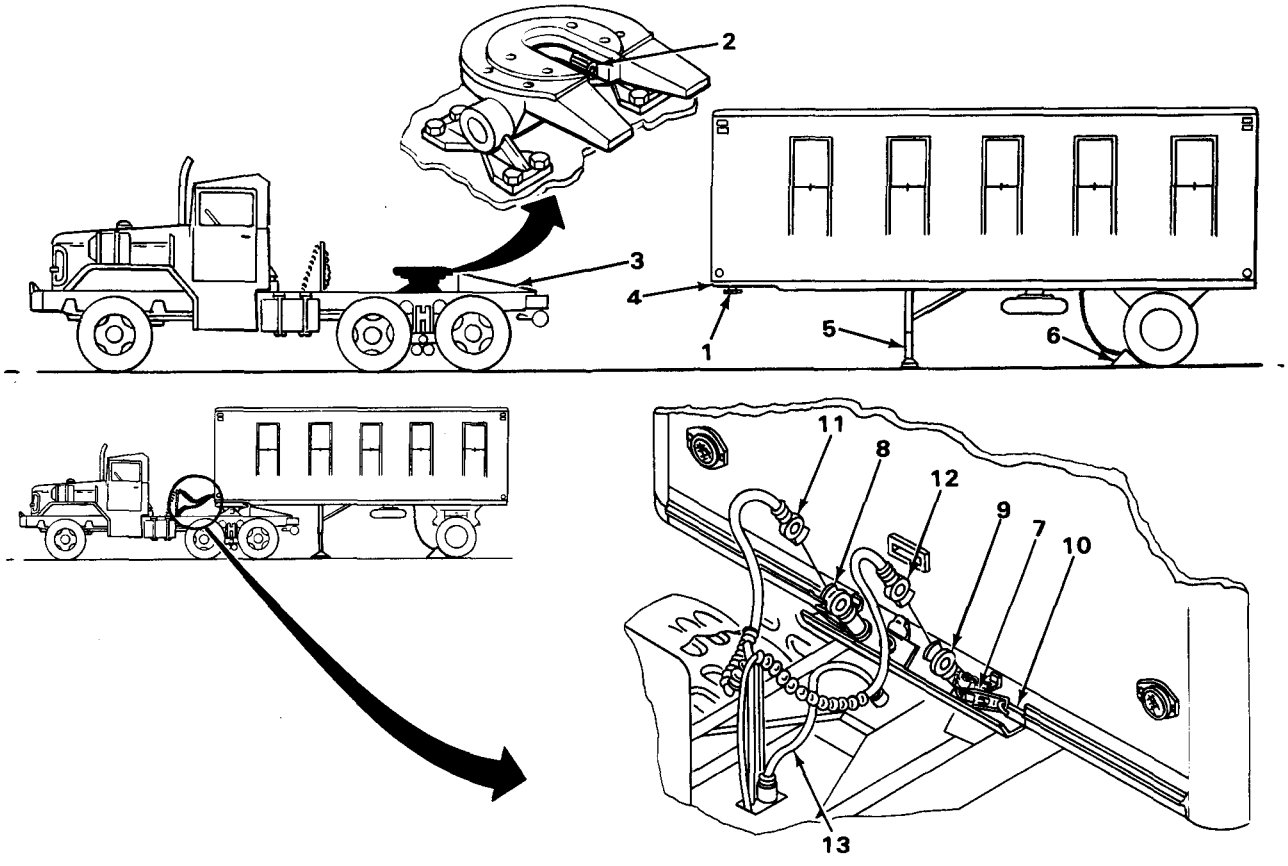

6. Visually check coupling.

   a. There must be no daylight between bolster plate (4) and fifth wheel (14).

   b. Kingpin (1) must not be hooked over front of fifth wheel (14).

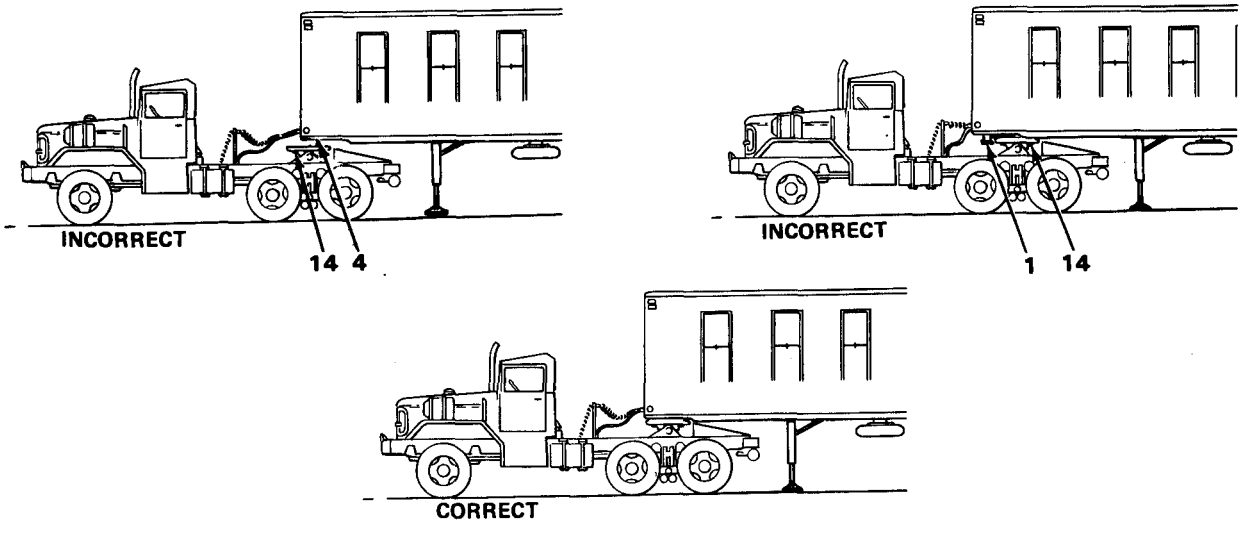

TA231209

PREPARATION FOR USE - CONTINUED

COUPLING TRUCK TRACTOR AND SEMITRAILER - CONTINUED

7. Ease truck tractor forward to check coupling with the semitrailer brakes set. If coupling is not locked, rock truck tractor back and forth slowly until kingpin is locked.

8. If hookup failed, pull towing vehicle forward carefully and within the limits of the air lines. Repeat steps 5 thru 7.

9. Raise cover on tractor-to-semitrailer electrical socket (1), and push electrical cable (2) straight in.

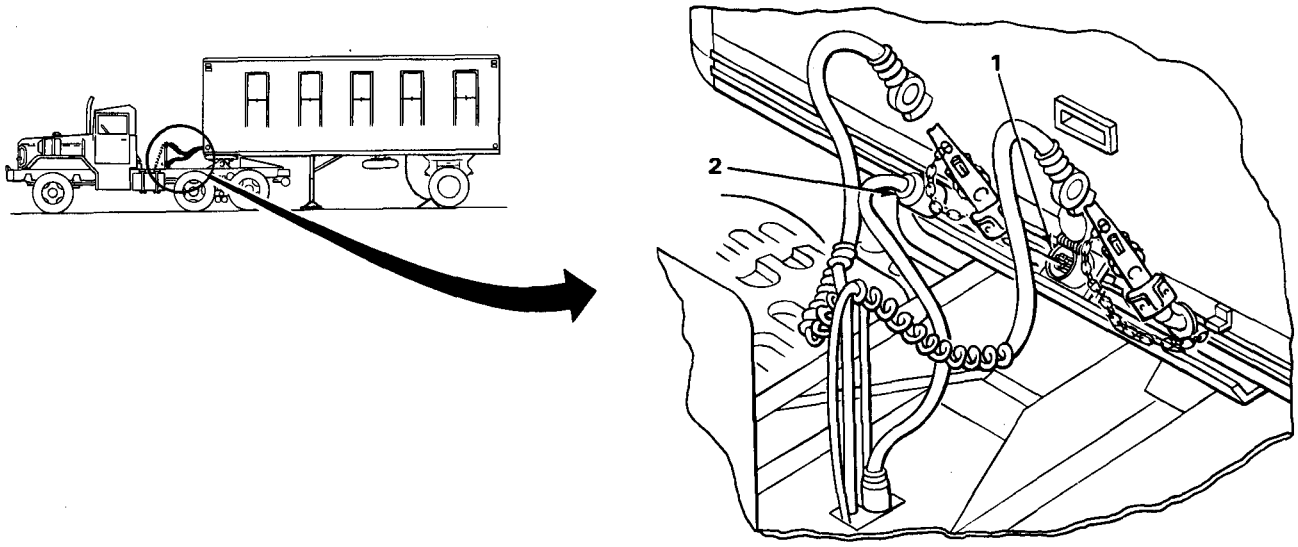

RAISING LANDING GEAR

1. Recheck coupling lock by trying to ease truck tractor and semitrailer forward. If properly coupled, go to step 2. If not properly coupled, repeat coupling procedure.

2. Unhook landing gear crank (3) from stowage bracket (4).

3. Pull landing gear crank outward approximately 2 inches (5 cm) for low speed, and turn it counterclockwise until landing gear leg (5) leaves the ground. Push in crank (3) for high speed and continue cranking until leg (5) is all the way up. Repeat steps 2 and 3 for other landing gear leg (6).

4. Lower landing gear crank (3), and put in stowage bracket (4).

TA231210

PREPARATION FOR USE - CONTINUED

RAISING LANDING GEAR - CONTINUED

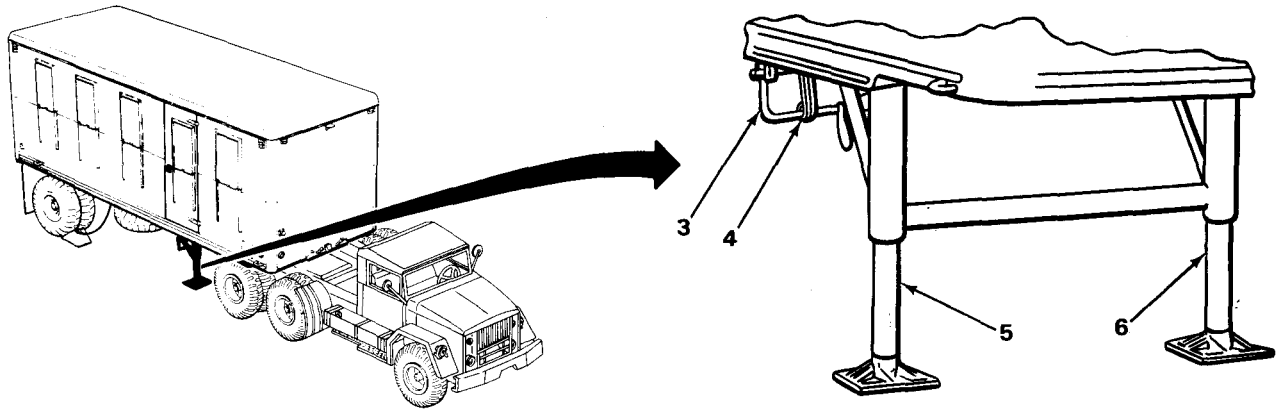

5. Remove chock blocks (7) from behind or in front of tire and wheel assembly (8). Put chock blocks (7) in stowage bracket (9) on both sides of semitrailer, and loop chain (10) onto brackets (11).

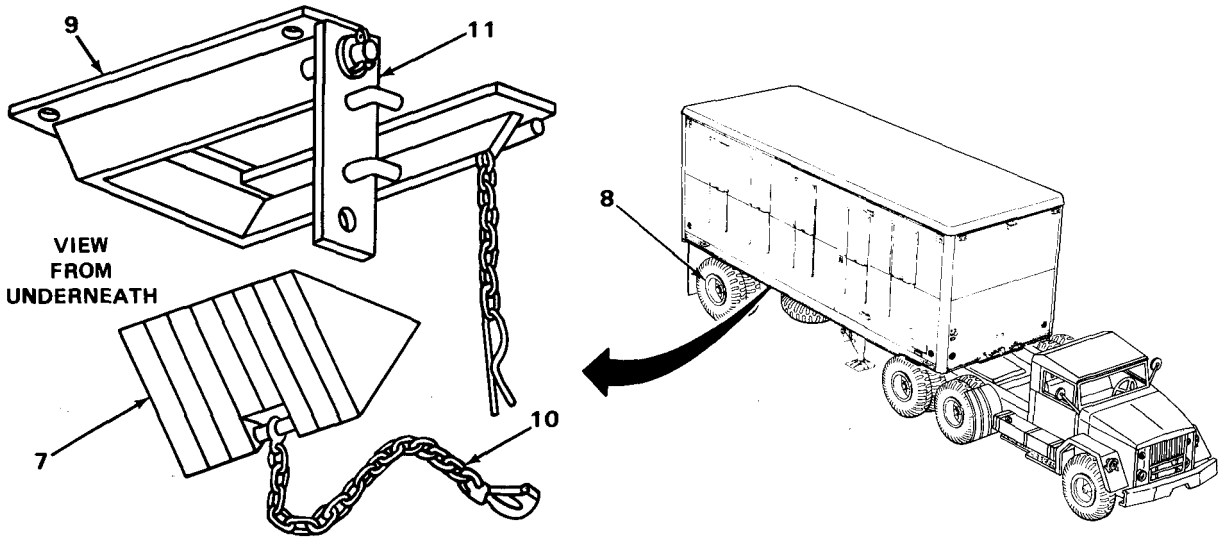

TA231211

PREPARATION FOR USE - CONTINUED

CHECKING LIGHTS

WARNING

Do not operate semitrailer with burned out, missing, or damaged lights. Failure to be seen could result in injury to personnel.

1. Turn on service drive lights in towing vehicle, and check that amber and red clearance lights (1) and (2) are lit.

2. Have an assistant apply service brakes while you check that both brake lights (3) are lit. Check that both brake lights (3) go off when brakes are released.

3. Operate left turn signal, and check that left turn signal light (4) flashes. Operate right turn signal, and check that right turn signal light (5) flashes.

4. Select blackout lights in towing vehicle. Check that amber and red clearance lights (1) and (2) go out and blackout marker lights (6), (7), and (8) go on.

5. Have assistant apply service brakes while you check that blackout stop light (9) becomes lit and goes out when brake pedal is released.

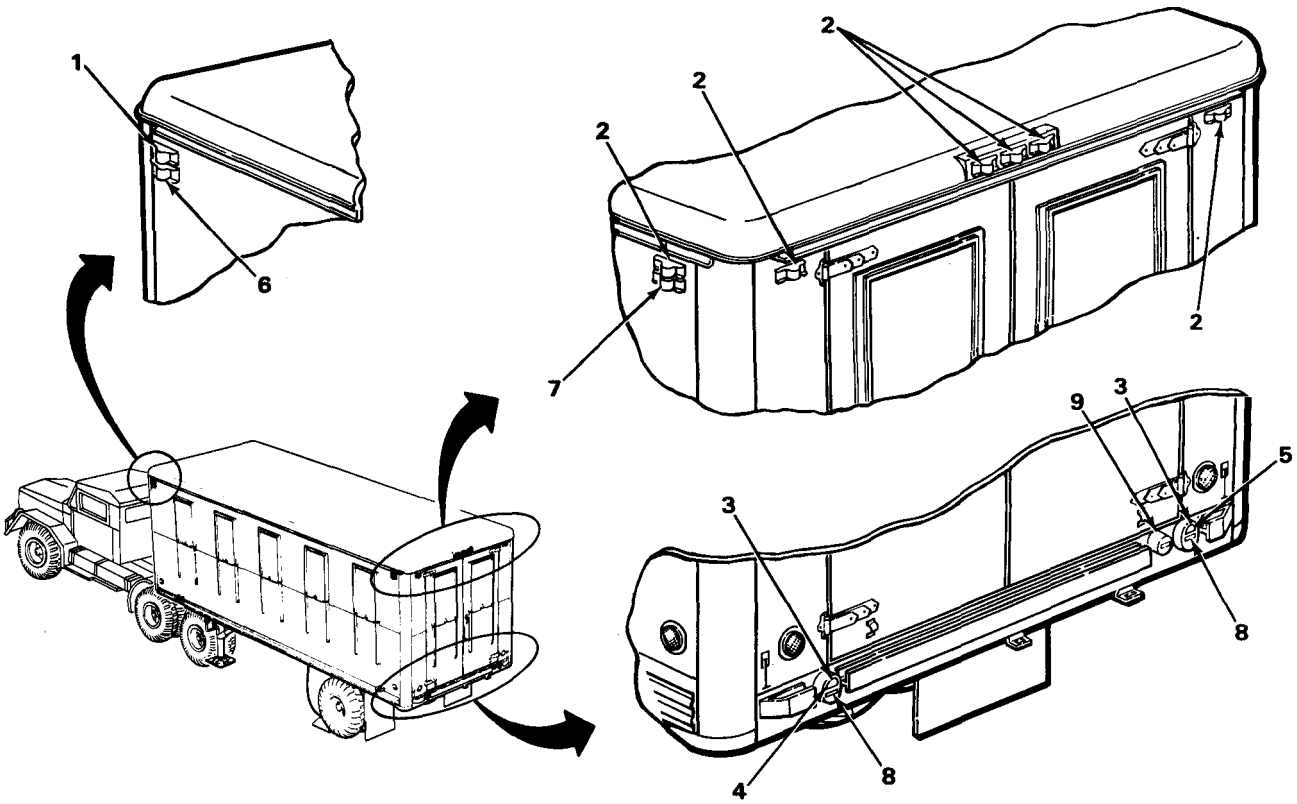

TA231212

PREPARATION FOR USE - CONTINUED

CHECKING BRAKES

1. Apply towing vehicle semitrailer handbrake control.

2. Have assistant watch semitrailer tire and wheel assemblies as you move semitrailer forward. Semitrailer tire and wheel assemblies should not move. If they move, recheck truck tractor-to-semitrailer airhose connections.

OPERATION

DRIVING

When driving truck tractor and semitrailer, the overall length of unit must be kept in mind when passing other vehicles and when turning. Because unit is hinged in the middle, backing is also affected.

TURNING

When turning corners, allow for fact that semitrailer tires and wheels turn inside turning radius of the truck tractor. Make right turn at road intersection by driving towing vehicle about half way into intersection, then cut sharply to the right. This will keep semitrailer off curb.

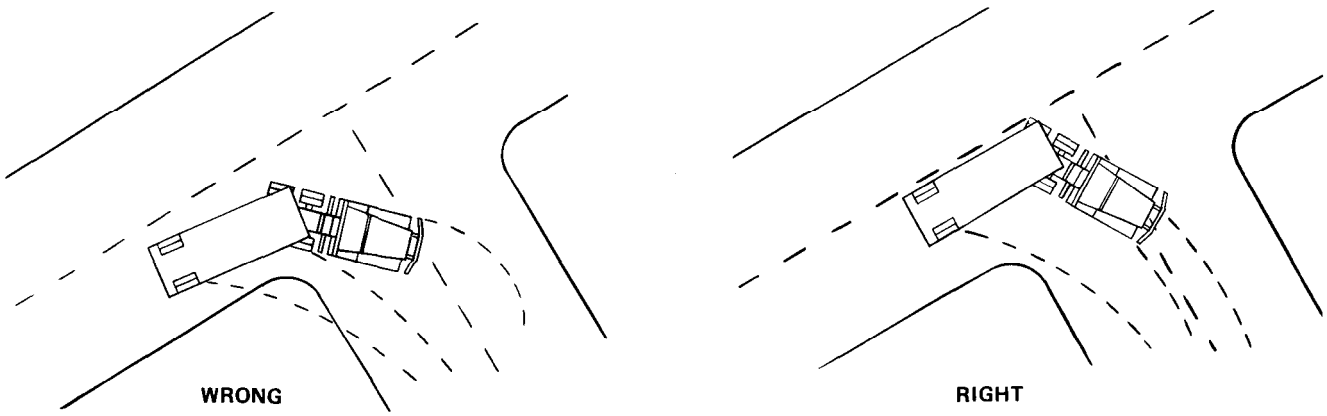

STOPPING

Brakes of truck tractor and semitrailer are applied at the same time in normal operation when driver steps on brake pedal. Brake pressure must be applied gradually and smoothly. Semitrailer brakes may be applied separately by using semitrailer handbrake control lever on steering column. On steep downgrades or slippery surfaces, semitrailer brakes must be applied before tractor brakes. This will reduce the possibility of jackknifing semitrailer.

TA231213

OPERATION - CONTINUED

PARKING

When parking truck tractor and semitrailer that will be unattended, set parking brake on truck tractor, apply semitrailer handbrake control, and turn off engine before leaving cab. Block semitrailer wheels with chock blocks (1). Block behind tires on uphill grade and in front of tires on downhill grade. If parked on soft surface, place mud plates (2) under landing gear leg shoes (3) (page 2-3).

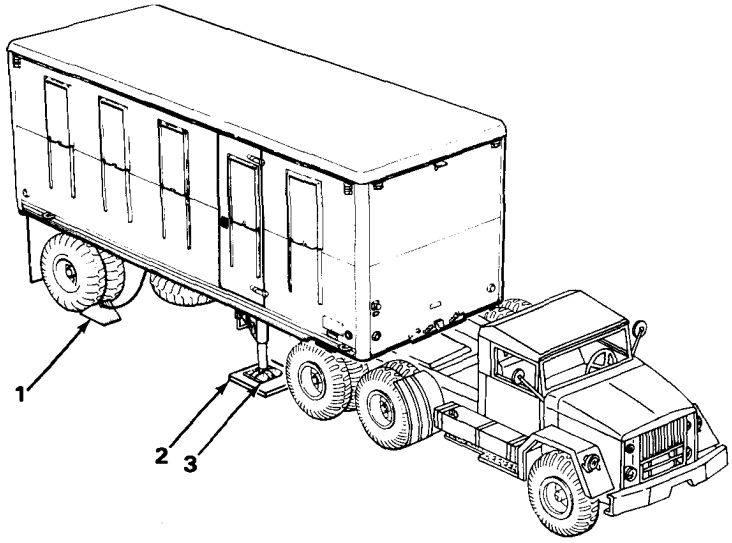

BACKING

When possible, use an assistant as a ground guide to direct you while backing. Adjust rear view mirrors before backing. When backing, the rear of semitrailer will move in opposite direction from which front truck tractor wheels are turned. If wheels are turned to right, semitrailer will go left. If wheels are turned to left, semitrailer will go right. If possible, and if room permits, always try to back the semitrailer to the left by turning wheels to the right. This method is known as backing "sight" side and should be used whenever possible (FM 21-305).

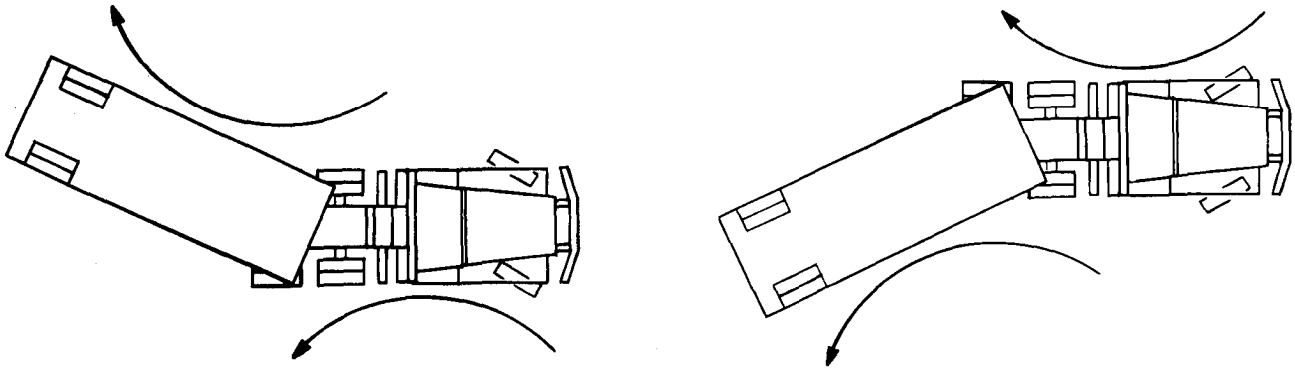

TA231214

AFTER USE

LOWERING LANDING GEAR

1. Unhook crank (1) from stowage bracket (2).

2. Turn crank (1) clockwise in high gear until leg (3) is extended, and put crank back in stowage bracket (2). Repeat steps 1 and 2 for other leg (4).

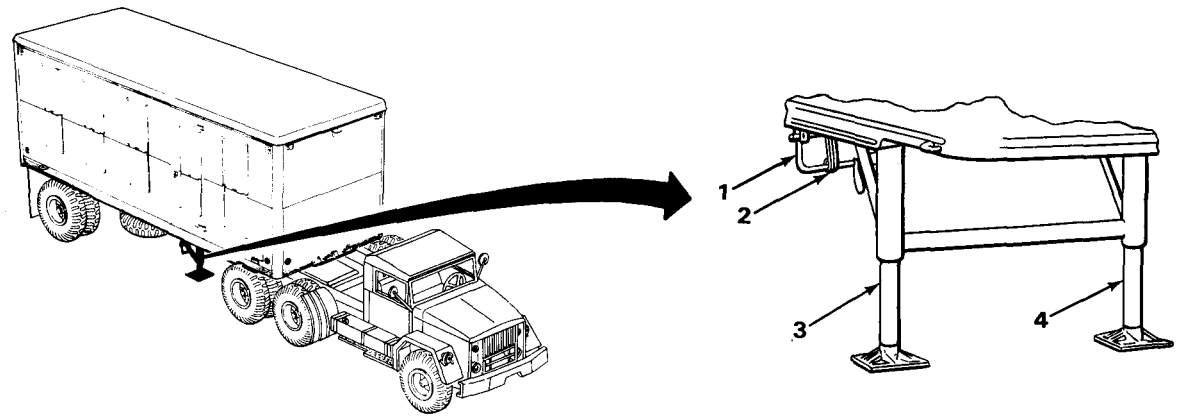

POSITIONING CHOCK BLOCKS

1. Take chock blocks (5) out of stowage racks (6), one for each side of semitrailer.

2. Place chock blocks (5) as follows:

   a. On downgrades, place chock blocks (5) in front of outside tire and wheel assemblies (7).

   b. On upgrades, place chock blocks (5) behind outside tire and wheel assemblies (7).

   c. On level ground, place one chock block (5) in front of one outside tire and wheel assembly (7), and place the other chock block (5) behind the opposite outside tire and wheel assembly (7).

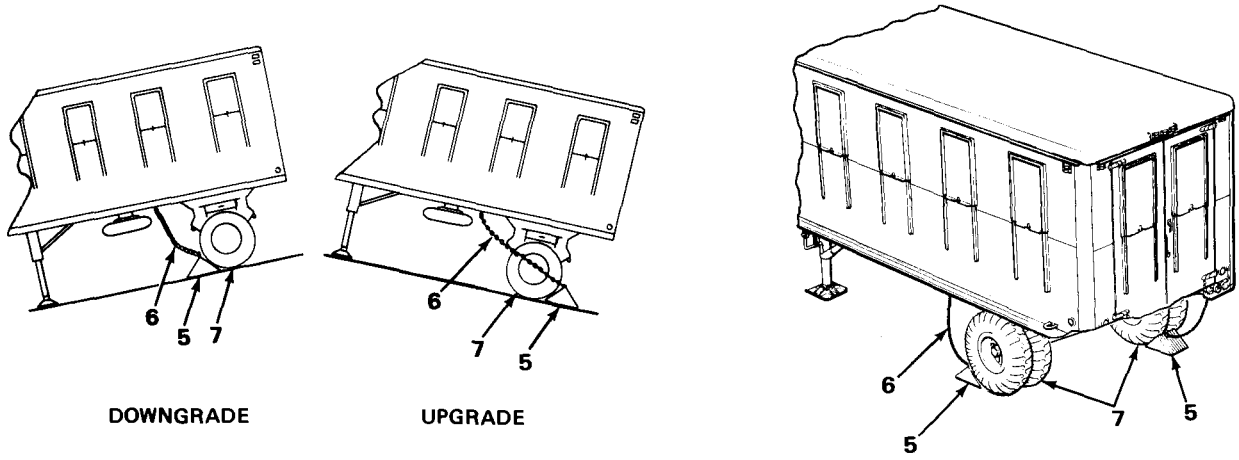

TA231215

AFTER USE - CONTINUED

UNCOUPLING

1. Shut off tractor-to-semitrailer air supply.
2. Disconnect service air line (1) and emergency air line (2) from couplings (3) and (4).
3. Place dummy couplings (5) and (6) on semitrailer couplings (3) and (4) for protection.
4. Disconnect electrical cable (7) from semitrailer by pulling straight out from socket (8).
5. Be sure socket cover (9) is closed.
6. Stow electrical cable (7) with tractor.

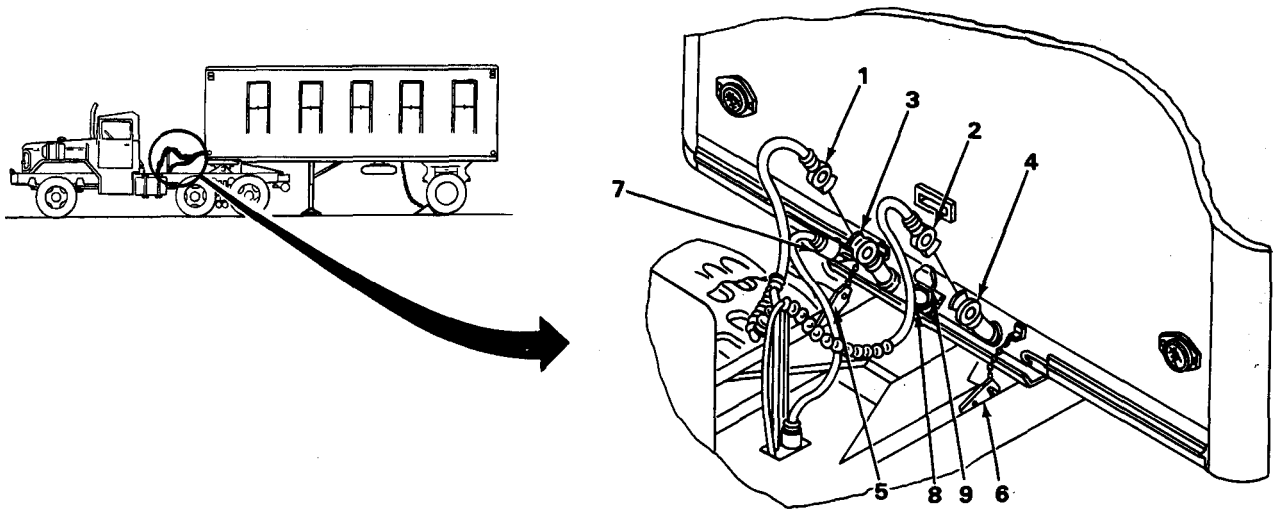

7. Release semitrailer kingpin (10) from truck tractor fifth wheel (11). See Truck Tractor Operator's Manual for instructions.

WARNING

Semitrailer may tip over causing injury to personnel if landing legs are not balanced. Make certain legs are balanced.

8. Slowly move truck tractor forward until semitrailer is clear of approach ramps (12).
9. Unhook crank (13) from stowage bracket (14).
10. Adjust both legs (15) and (16) until semitrailer is level.

TA231216

AFTER USE - CONTINUED

UNCOUPLING - CONTINUED

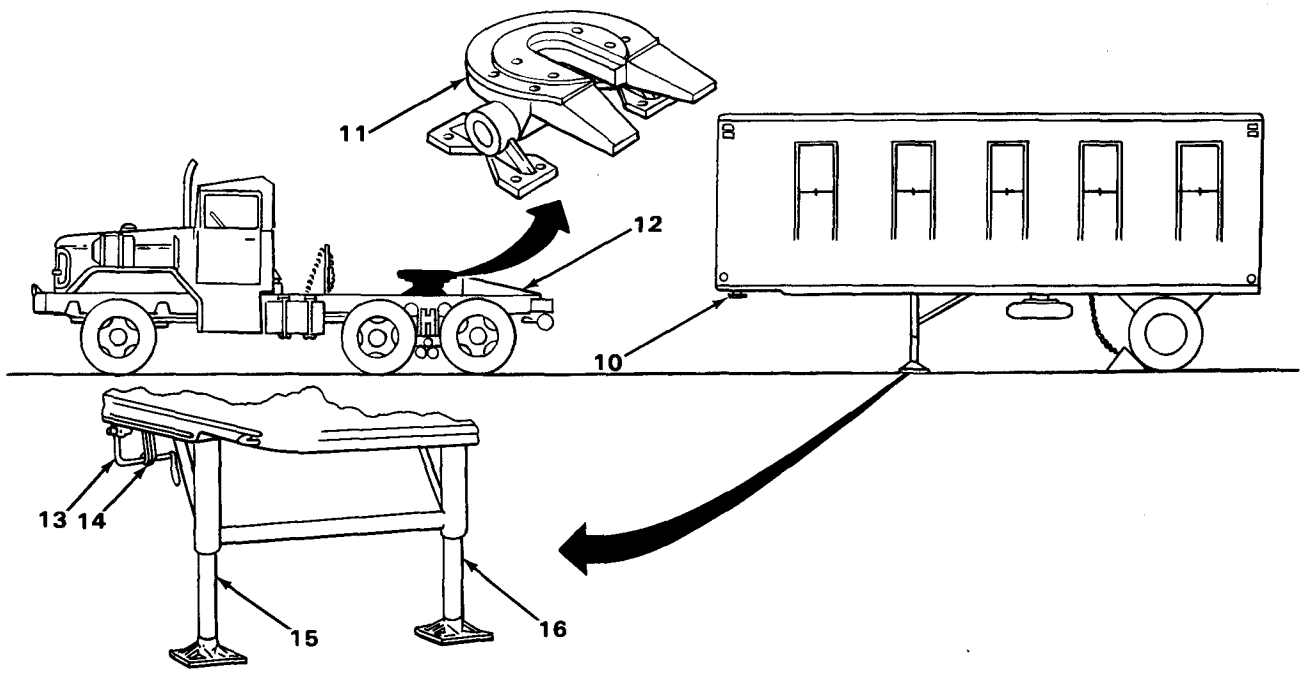

Section IV. OPERATION UNDER UNUSUAL CONDITIONS

OPERATION IN EXTREME HEAT

Do not park the semitrailer in sunlight for long Periods of time. Heat and sunlight shorten the life of tires. If possible, shelter or cover semitrailer and tires.

OPERATION IN EXTREME COLD

1. Extreme cold can cause lubricants to thicken or congeal, insulation to crack and cause electrical short circuits, and construction materials to become hard, brittle, and easily damaged or broken. Cover, and shield the semitrailer with canvas covers if available. Keep ends of covers off of ground to keep them from freezing to the ground.

2. Tires may freeze to the ground or have a flat spot if underinflated.

3. Brakeshoes may freeze to brakedrums and need to be heated to prevent damage to mating surfaces.

TA231217

OPERATION IN EXTREME COLD - CONTINUED

4. Refer to FM 9-207 and FM 21-305 for special instructions on driving hazards in extreme cold (0° to – 65° Fahrenheit (F)), (-18° to – 54° Celsius (C)).

5. When parking short term, park in a sheltered area out of wind.

6. For parking long term, if high, dry ground is not available, place a footing of planks or brush under semitrailer wheels and landing gear.

7. Remove all built up ice, snow, and mud as soon as possible after shutdown.

OPERATION IN RAINY OR HUMID CONDITIONS

Inspect, clean, and lubricate inactive equipment often to stop rust and fungus.

OPERATION IN SANDY OR DUSTY AREAS

CAUTION

Do not tow, pull, or push semitrailer by rear bumper. Damage maybe caused.

1. Clean, inspect, and lubricate more often in dusty or sandy areas.

2. Reduce tire inflation to 15 psi (103 kPa) for operation in beach and desert sand.

3. Be sure to return tire air pressure to 50 psi (345 kPa) after operation in sand.

OPERATION IN SNOW

See FM 21-305 for special instructions on operations in snow.

OPERATION IN MUD

CAUTION

Do not tow, pull, or push semitrailer by rear bumper. Damage maybe caused.

1. If practical, reduce tire inflation to 15 psi (103 kPa) while operating in soft mud.

2. If one or more wheels sink into mud, you may need to jack up mired wheel and put planking or matting under it.

3. Clean off all mud after operation.

4. Be sure to return tire air pressure to 50 psi (345 kPa) after operation in mud.

OPERATION IN SALT WATER AREAS

Salt water will cause early rust and corrosion. Clean, inspect, and lubricate often.

OPERATION ON ROCKY TERRAIN

1. Tires must be inflated to 50 psi (345 kPa) when moving on rough or rocky terrain. Underinflated tires will cause internal ruptures of the tires and damage to tubes.

2. Before driving over stumps or rocks, make sure semitrailer can clear them. Such objects can damage components on underside of semitrailer. Beware of low hanging tree limbs that can cause damage to van body.

3. Be sure you have a serviceable spare tire and wheel assembly because there is a greater chance of tire puncture.

FORDING

Before Fording

1. Before entering water, check the bottom surface condition. If bottom surface is too soft, do not ford.

After Fording

2. After coming out of water, apply brakes a few times to help dry out brake linings. Make sure semitrailer brakes are working properly before driving at normal speeds.

3. Drain or dry all areas where water is lying.

4. Lubricate all unpainted surfaces.

5. Dry all lubricating points, and lubricate them. See Lubrication Instructions, page 4-5.

CHAPTER 3

OPERATOR MAINTENANCE

OVERVIEW

This chapter contains the lubrication, troubleshooting, and maintenance instructions and procedures authorized at operator level.

Section I. LUBRICATION INSTRUCTIONS

Lubrication under usual and unusual conditions and the semitrailer lubrication chart are contained in Organizational Maintenance, Chapter 4.

Section II. OPERATOR TROUBLESHOOTING PROCEDURES

INTRODUCTION

This section lists the common malfunctions which you may find during operation of the semitrailer or its components. Perform the tests/inspections and corrective maintenance in the order listed.

This manual cannot list all malfunctions that may occur, nor all tests or inspections and corrective actions. If malfunction is not listed or corrected, notify Organizational Maintenance.

EXPLANATION OF COLUMNS

MALFUNCTION	Visual or operational indication that something is wrong with the semitrailer.
TEST/Inspection	Procedure to isolate the problem to a component or system.
CORRECTIVE ACTION	Procedure to correct problem.

SYMPTOM INDEX

This symptom index is provided as a quick way to get you to the part of the troubleshooting table that will help you solve the problem you are having. It lists all of the malfunctions covered in Operator Troubleshooting.

OPERATOR TROUBLESHOOTING

The following table provides procedures that the operator can use to find and fix semitrailer malfunctions. The semitrailer must be hooked up to truck tractor for electrical and brake system checks.

OPERATOR TROUBLESHOOTING

MALFUNCTION
TEST OR INSPECTION
CORRECTIVE ACTION

ELECTRICAL SYSTEM - 24-VOLT

1. ALL LIGHTS DO NOT WORK

Step 1. Turn on truck tractor lights and check their operation. See Truck Tractor Operator's Manual.

If truck tractor lights do not work, notify Organizational Maintenance.

Step 2. Check tractor-to-semitrailer electrical cable for proper connection.

If cable is not properly connected, connect (page 2-19).

Step 3. Check truck tractor, semitrailer, and cable connectors for bent and broken pins and dirty and corroded pins and sockets.

a. If pins or sockets are dirty or corroded, clean them (page 3-8).

b. If pins are broken or there is any evidence of damage, notify Organizational Maintenance.

c. If all lights still do not work, notify Organizational Maintenance.

2. ONE OR MORE, BUT NOT ALL, LIGHTS WILL NOT WORK

Step 1. Turn on truck tractor lights and check their operation. See Truck Tractor Operator's Manual.

If any truck tractor lights do not work, notify Organizational Maintenance.

Step 2. Check tractor-to-semitrailer electrical cable for proper connection.

If cable is not properly connected, connect (page 2-19).

Step 3. Check semitrailer connector receptacle for bent, broken, dirty, or corroded pins and sockets.

a. If pins or sockets are dirty or corroded, clean them (page 3-8).

b. If pins are broken or there is any evidence of damage, notify Organizational Maintenance.

OPERATOR TROUBLESHOOTING - CONTINUED

MALFUNCTION
TEST OR INSPECTION
CORRECTIVE ACTION

2. ONE OR MORE, BUT NOT ALL, LIGHTS WILL NOT WORK - CONTINUED

Step 4. Check for broken lead wires or loose connections at inoperative lights.

a. If connections are loose, push together.

b. If lead wires are broken, notify Organizational Maintenance.

Step 5. Check lens and light assembly for damage at inoperative lights.

a. If lens or light assembly is damaged, notify Organizational Maintenance.

b. If lights still do not work, notify Organizational Maintenance.

ELECTRICAL SYSTEM - 110-VOLT

3. ALL LIGHTS DO NOT WORK

Step 1. Check the connection from the power source to the semitrailer.

If cable is not properly connected, connect.

Step 2. Check the junction boxes to make sure all the circuit breakers are on.

a. If breakers are off, turn on (page 2-8).

b. If breakers are damaged, notify Organizational Maintenance,

Step 3. Check the light switches to make sure they are on.

a. If switches are off, turn on (page 2-8).

b. If all the lights still do not work, notify Organizational Maintenance.

4. ONE OR MORE, BUT NOT ALL, LIGHTS WILL NOT WORK

Step 1. Check the junction boxes to make sure all the circuit breakers are on.

a. If breakers are off, turn on (page 2-8).

b. If breakers are damaged, notify Organizational Maintenance.

OPERATOR TROUBLESHOOTING - CONTINUED

MALFUNCTION
TEST OR INSPECTION
CORRECTIVE ACTION

4. ONE OR MORE, BUT NOT ALL, LIGHTS WILL NOT WORK - CONTINUED

Step 2. Check to make sure the proper switches are on.

a. If switches are off, turn on (page 2-8).

b. If lights still do not work, notify Organizational Maintenance.

5. ALL RECEPTACLES DO NOT WORK

Step 1. Check the connection from the power source to the semitrailer.

If cable is not properly connected, reconnect.

Step 2. Check the junction boxes to make sure all the circuit breakers are on.

a. If circuit breakers are off, turn on (page 2-8).

b. If all receptacles still do not work, notify Organizational Maintenance.

6. ONE OR MORE, BUT NOT ALL, RECEPTACLES WILL NOT WORK

Check the junction boxes to make sure all the circuit breakers are on.

a. If circuit breakers are off, turn on (page 2-8).

b. If one or more receptacles still do not work, notify Organizational Maintenance.

BRAKES

7. BRAKES WILL NOT APPLY OR RELEASE

Step 1. Check that tractor-to-semitrailer air supply is turned on.

If air is shut off, turn on air supply (see Truck Tractor Operator's Manual).

OPERATOR TROUBLESHOOTING - CONTINUED

MALFUNCTION
TEST OR INSPECTION
CORRECTIVE ACTION

7. BRAKES WILL NOT APPLY OR RELEASE - CONTINUED

WARNING

Failure to wear protective goggles when opening air reservoir draincock could cause serious eye injury.

Step 2. Check semitrailer air reservoir for open draincock.

a. If draincock is open, close it (page 2-13).

b. If draincock is closed and brakes still will not apply, or apply slowly, notify Organizational Maintenance.

Step 3. Check air pressure of truck tractor.

If pressure is low, build up air pressure to normal level (see Truck Tractor Operator's Manual).

Step 4. Check connections of air lines to couplings.

If air lines are not properly connected (Emergency-to-Emergency, and Service-to-Service), connect air lines (page 2-20).

Step 5. Check for dirty or leaking coupling connection.

a. If coupling is dirty, clean (page 3-10).

b. If coupling is leaking, notify Organizational Maintenance.

Step 6. Inspect brake air hoses and hydraulic lines and connectors for leaks.

If hoses or connectors are leaking, notify Organizational Maintenance.

Step 7. Check for damaged or missing preformed packing in coupling.

If preformed packing is damaged or missing, notify Organizational Maintenance.

8. BRAKES GRAB

Notify Organizational Maintenance.

OPERATOR TROUBLESHOOTING - CONTINUED

MALFUNCTION
TEST OR INSPECTION
CORRECTIVE ACTION

9. LANDING GEAR IS DIFFICULT TO LOWER OR RAISE

Step 1. Check to see if landing gear needs lubrication.

If landing gear needs lubrication, lubricate it (page 4-5).

Step 2. Check for dirt on lower landing gear leg.

If lower landing gear leg is dirty, clean it (page 3-20).

Step 3. Check for misalined or broken crank handle.

If crank handle is misalined or broken, notify Organizational Maintenance.

Step 4. Check for misalined, damaged, or bent landing gear legs.

a. If landing gear legs are damaged, notify Organizational Maintenance.

b. If landing gear legs are not damaged, and the landing gear remains difficult to raise or lower, notify Organizational Maintenance.

TIRES

10. EXCESSIVELY WORN, SCUFFED, OR CUPPED TIRES

Step 1. Check tire pressure.

If tire pressure is not 50 pounds per square inch (psi) (345 kilopascals (kPa)), inflate tires to 50 psi (345 kPa).

Step 2. Check for loose, cracked, or broken wheels.

a. If wheels are loose, tighten. Have Organizational Maintenance tighten nuts to 400 to 425 foot pounds (ft-lb) (540 to 560 Newton-meters (N m)) of torque as soon as possible.

b. If wheel is cracked or broken, notify Organizational Maintenance.

OPERATOR TROUBLESHOOTING - CONTINUED

MALFUNCTION
TEST OR INSPECTION
CORRECTIVE ACTION

10. EXCESSIVELY WORN, SCUFFED, OR CUPPED TIRES-CONTINUED

Step 3. Check suspension system for damaged springs and loose or missing bolts and nuts.

If suspension system is damaged or has loose or missing bolts and nuts, notify Organizational Maintenance.

Step 4. Check tracking for indication of axle misalinement.

a. If axle appears to be misalined, notify Organizational Maintenance.

b. If the above steps do not correct the malfunction, notify Organizational Maintenance.

Section III. OPERATOR MAINTENANCE PROCEDURES

ELECTRICAL CONNECTORS

This task covers:

Cleaning (page 3-9)

INITIAL SETUP

Materials/Parts

Brush, acid swabbing, (item 4, apppendix E)
Rags, wiping (item 16, appendix E)
Solvent, drycleaning PD-680 (Item 18, appendix E)

Personnel Required

One

Equipment Condition

Remove 110 volts alternating current (vat) cable from stowage (page 2-4).

ELECTRICAL CONNECTORS - CONTINUED

LOCATION	ITEM	ACTION **REMARKS**
CLEANING		
Front of semitrailer (1)	Semitrailer electrical receptacle connectors (2) and (3), and semitrailer electrical cable connector (4)	a. Using rags, wipe off any buildup of grease and dirt.

WARNING

Drycleaning solvent PD-680 is both toxic and flammable. Avoid prolonged breathing of vapors, and avoid skin contact. Use only in well-ventilated area, and keep away from open flame or excessive heat. Injury to personnel could occur.

b. Using brush and drycleaning solvent PD-680, clean metal parts only.
c. Allow to dry.

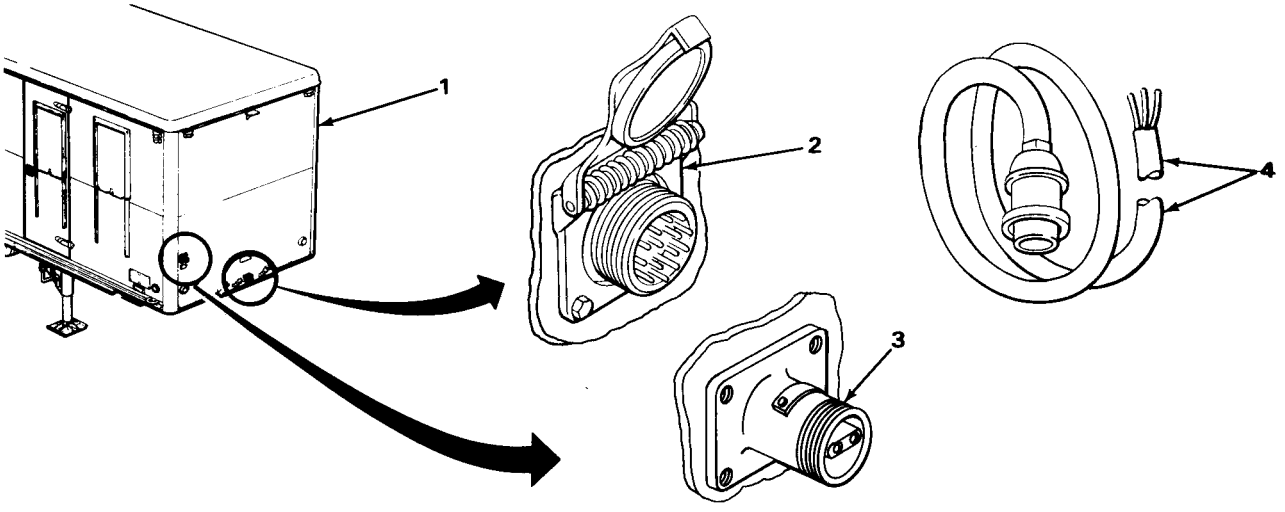

NOTE

FOLLOW-ON MAINTENANCE: Stow 110 vac electrical cable (page 2-4).

TASK ENDS HERE

TA231218

COUPLINGS

This task covers:

Cleaning (page 3-10)

INITIAL SETUP

Materials/Parts	Personnel Required
Rags, wiping (item 16, appendix E)	One
Solvent, drycleaning PD-680 (item 18, appendix E)	

LOCATION	ITEM	ACTION **REMARKS**
CLEANING		
Semitrailer(1)	Six couplings (2)	a. Using rags, wipe off any buildup of grease and dirt.

WARNING

Drycleaning solvent PD-680 is both toxic and flammable. Avoid prolonged breathing of vapors, and avoid skin contact. Use only in well-ventilated area, and keep away from open flame or excessive heat. Injury to personnel could occur.

b. Using rag moistened with drycleaning solvent, clean metal parts only.
c. Allow to dry.

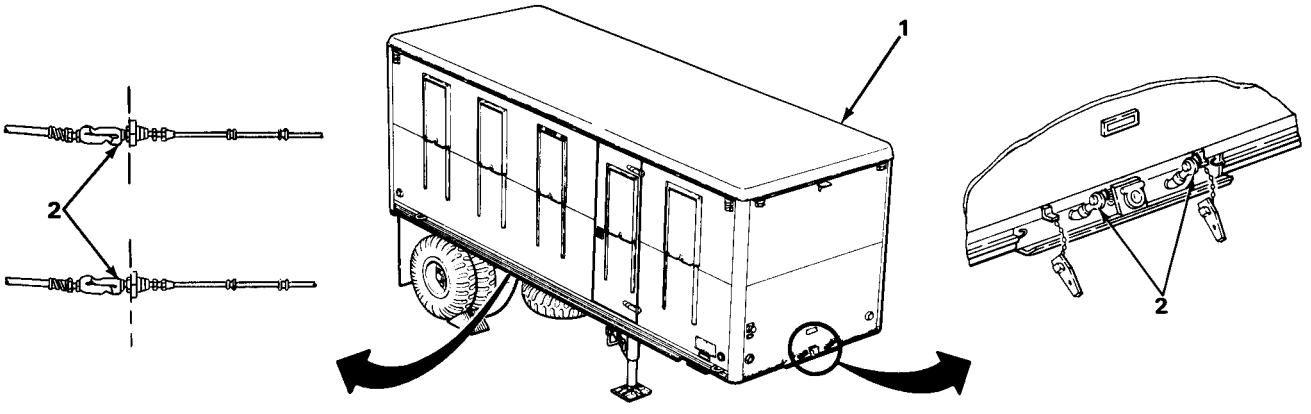

TASK ENDS HERE

TA231219

AIR RESERVOIR

This task covers:

Servicing (page 3-11)

INITIAL SETUP

Tools	Personnel Required
Goggles, protective	One
	Equipment Condition
	Truck tractor coupled to semitrailer (page 2-18).

LOCATION	ITEM	ACTION	REMARKS
SERVICING			
1. Truck tractor (1)	Trailer air supply	Turn off.	**Refer to Truck Tractor Operator's Manual.**
2. Front of semitrailer (2)	Tractor-to-semi-trailer air lines (3)	Disconnect from couplings (4).	

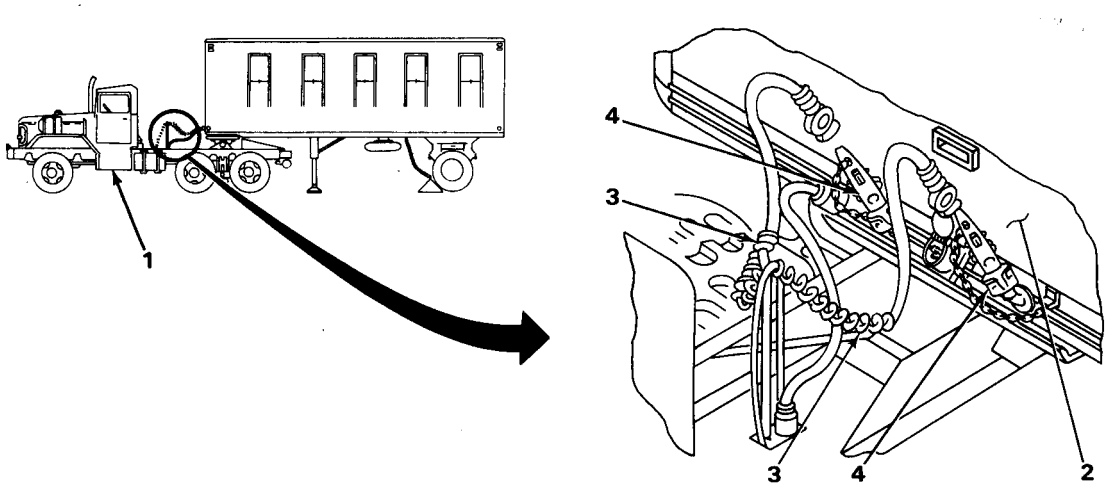

TA231220

AIR RESERVOIR - CONTINUED

LOCATION	ITEM	ACTION **REMARKS**
SERVICING - CONTINUED		
	WARNING Failure to wear protective goggles when opening air reservoir draincock could cause serious eye injury.	
3. Air reservoir (1), left rear of semi-trailer mounted to the inside of frame (2) on left side	Air reservoir draincock (3)	a. Open, and allow to fully drain. b. Close.
4. Front of semitrailer (4)	Tractor-to-semi-trailer air lines (5)	Connect to semitrailer couplings (6).
5. Truck tractor(7)	Trailer air supply	Turn on. **Refer to Truck Tractor Operator's Manual.**
6. Air reservoir(1), left rear of semi-trailer mounted to the inside of frame (2) on left side	Air reservoir draincock (3)	Check for leaks.

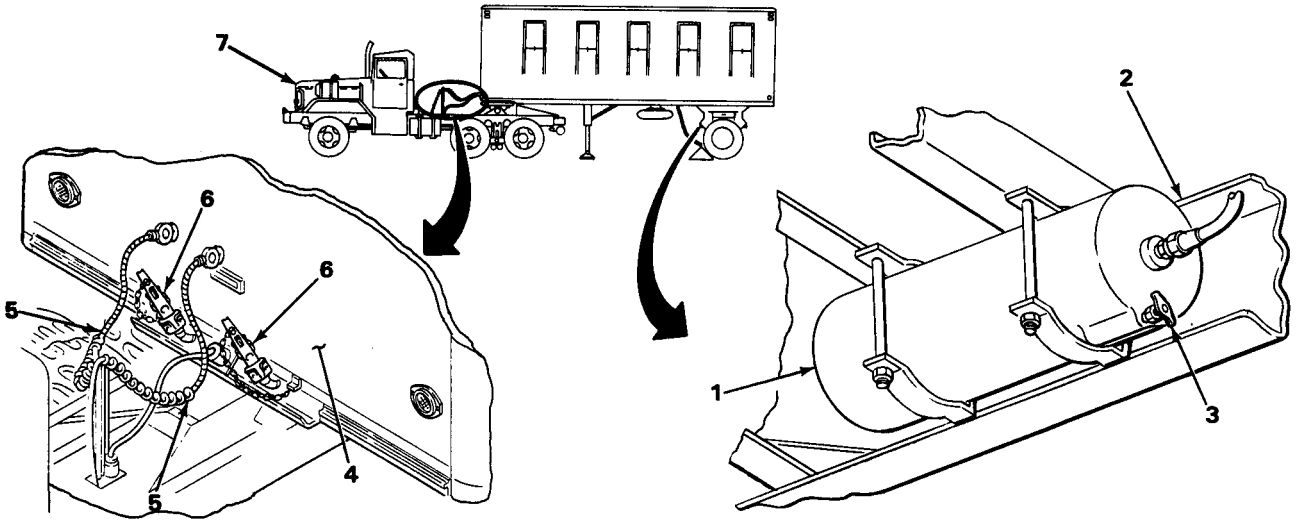

TA231221

AIR RESERVOIR - CONTINUED

SERVICING - CONTINUED

NOTE

FOLLOW-ON MAINTENANCE: Disconnect truck tractor from semitrailer (page 2-26).

TASK ENDS HERE

"Tire and Wheel Assembly" and "Spare Tire and Wheel Assembly", pages 3-13 through 3-19, have been rescinded.

TIRE AND WHEEL ASSEMBLY- CONTINUED

LOCATION	ITEM	ACTION **REMARKS**
INSTALLATION - CONTINUED		

NOTE

Lugbolts (7) are marked R. or L. in direction of forward wheel rotation. To tighten stud nuts (6) on right side, turn clockwise. To tighten stud nuts (6) on left side, turn counterclockwise.

9.	Six stud nuts (6)	Screw onto lugbolts (7), and tighten in the sequence shown using stud nut wrench.
10. Side of frame (3) where tire and wheel assembly is being removed	Axle (4)	a. Take trestles out from under axle (4). b. Lower jack until inner tire and wheel assembly (5) rests on the ground.
11. Lugbolts (7)	Six stud nuts (6)	Using stud nut wrench, tighten as much as possible in sequence shown below.

NOTE

Have Organizational Maintenance tighten stud nuts to 400 to 425 ft-lb (540-560 Nm) of torque as soon as possible, with outer tire and wheel assembly removed.

12.	Axle (4)	Raise jack until inner tire and wheel assembly (5) is off of ground.

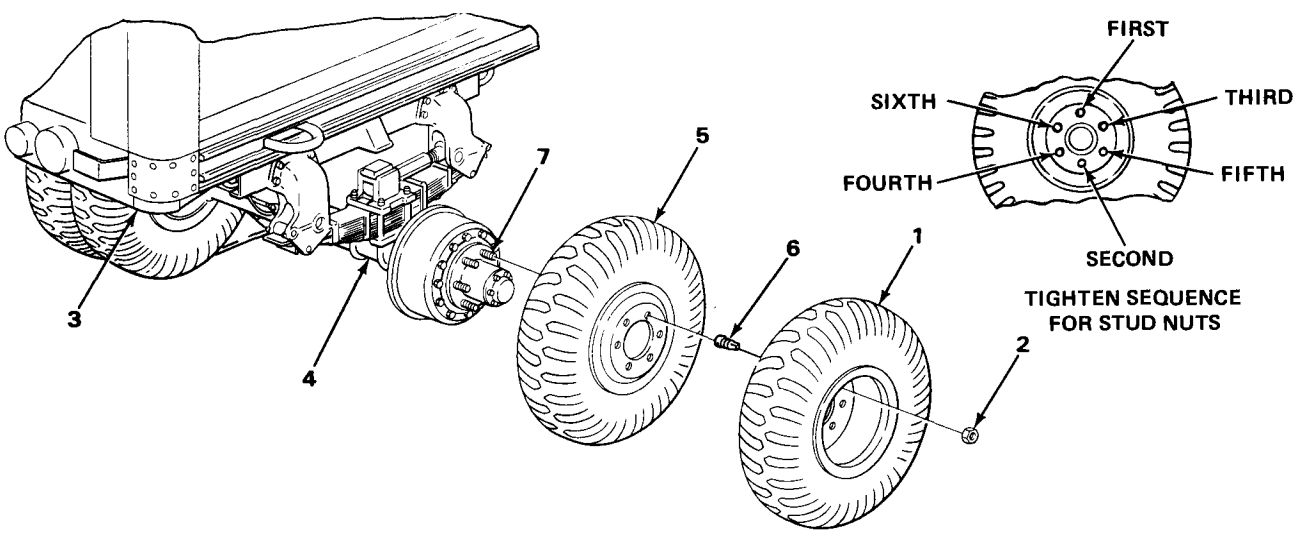

TA231223

TIRE AND WHEEL ASSEMBLY - CONTINUED

LOCATION	ITEM	ACTION **REMARKS**
INSTALLATION - CONTINUED		
13. Six stud nuts (1)	Outer tire and wheel assembly (2)	Place on stud nuts (1).

NOTE

Stud nuts (1) are threaded R. or L. in direction of forward wheel rotation. To tighten lug nuts (3) on right side, turn clockwise. To tighten lug nuts (3) on left side, turn counterclockwise.

14. Stud nuts (1)	Six lug nuts (3)	Screw onto stud nuts (1), and tighten in the sequence shown below using lug nut wrench.
15. Side of frame (4) where tire and wheel assembly is being removed	Axle (5)	Lower jack, take out from under axle (5), and stow.
16. Six stud nuts (1)	Six lug nuts (3)	a. Using lug nut wrench, tighten as much as possible in sequence shown below. b. Put chock blocks in place for tire and wheel assembly installed (page 2-24).

NOTE

Have Organizational Maintenance tighten lug nuts to 400 to 425 ft-lb (540-560 Nm) of torque as soon as possible.

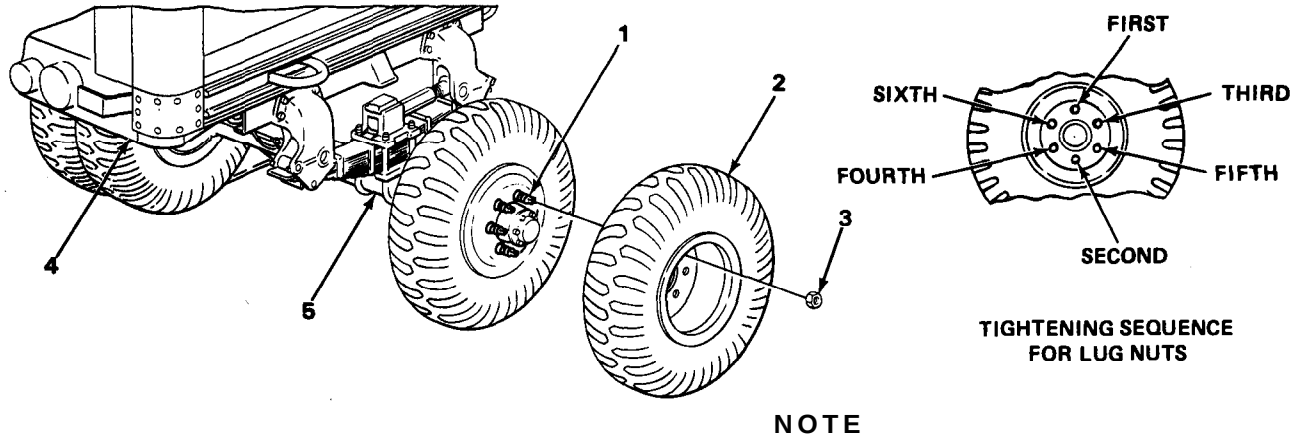

NOTE

FOLLOW-ON MAINTENANCE: Install spare tire and wheel assembly (page 3-17).

TASK ENDS HERE

TA231224

SPARE TIRE AND WHEEL ASSEMBLY

This task covers:

a. Removal (page 3-17)
b. Installation (page 3-18)

INITIAL SETUP

Tools	Personnel Required
Wrench, lug/stud nut	One

LOCATION	ITEM	ACTION	REMARKS

REMOVAL

WARNING

Make sure pawl is engaged in ratchet teeth. If pawl is not engaged, spare tire and wheel assembly will fall and cause serious injury.

1.	Spare wheel carrier (1) and studs (2)	Four nuts (3)	Using lug wrench, unscrew and take off.

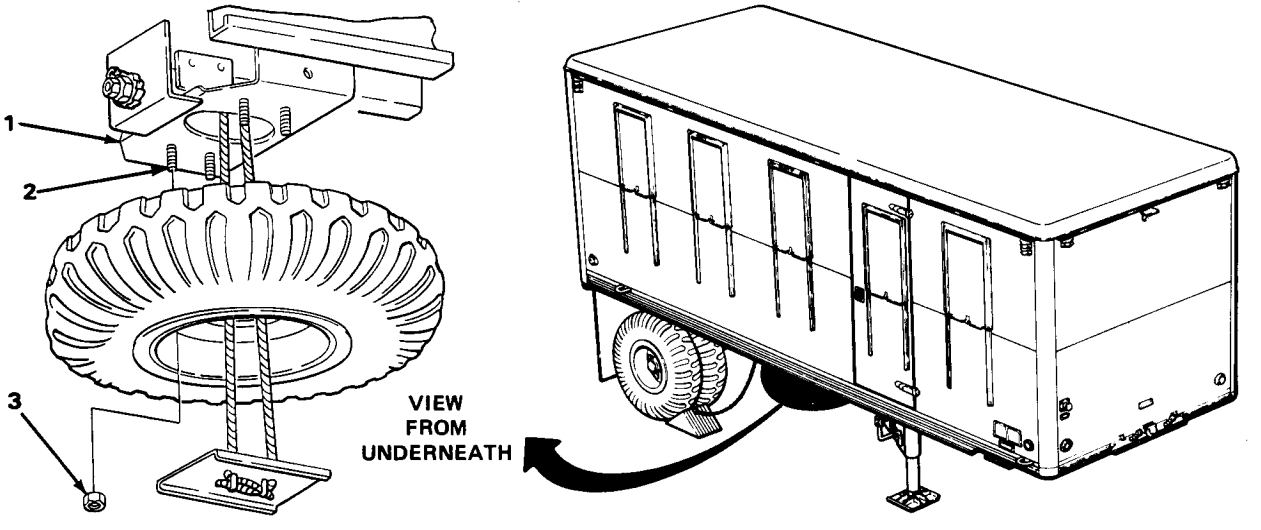

TA231225

SPARE TIRE AND WHEEL ASSEMBLY - CONTINUED

LOCATION	ITEM	ACTION **REMARKS**
REMOVAL- CONTINUED		
	WARNING Weight of spare tire and wheel assembly will cause lug nut wrench to spin freely if not held securely after pawl has been taken off ratchet teeth. Freely spinning lug wrench may cause injury to personnel. Allow spare tire and wheel assembly to lower slowly.	
2. Spare tire and wheel assembly carrier (1)	Ratchet wheel (2)	Using lug nut wrench, turn clockwise enough to free pawl (3).
3.	Pawl (3)	Lift off of ratchet wheel (2).
4.	Ratchet wheel (2)	Using lug nut wrench, turn counterclockwise to lower spare tire and wheel assembly (4).
5.	Support assembly (5)	a. Drop down and angle one end up center hole in spare tire and wheel assembly (4). b. Lift out of spare tire and wheel assembly (4).
INSTALLATION		
6.	Spare tire and wheel assembly (4)	Place under spare tire and wheel assembly carrier (1) with wheel dish (6) down.
7.	Support assembly (5)	Put one end down through center hole in spare tire and wheel assembly (4), and have support assembly (5) lie flat. Support assembly (5) must not block any holes in spare tire and wheel assembly (4).
8. Spare tire and wheel assembly carrier (1)	Pawl (3)	Put on ratchet wheel (2).

SPARE TIRE AND WHEEL ASSEMBLY - CONTINUED

	LOCATION	ITEM	ACTION REMARKS
INSTALLATION – CONTINUED			
9.		Ratchet wheel (2)	Turn clockwise to raise spare tire and wheel assembly (4) using lug nut wrench.
10.		Spare tire and wheel assembly (4)	Guide up so studs (7) on spare tire and wheel assembly carrier (1) fit into holes in spare tire and wheel assembly (4).
11.	Inside of spare tire wheel assembly carrier (1)	Four lug nuts (8)	Screw in, and tighten using lug nut wrench.

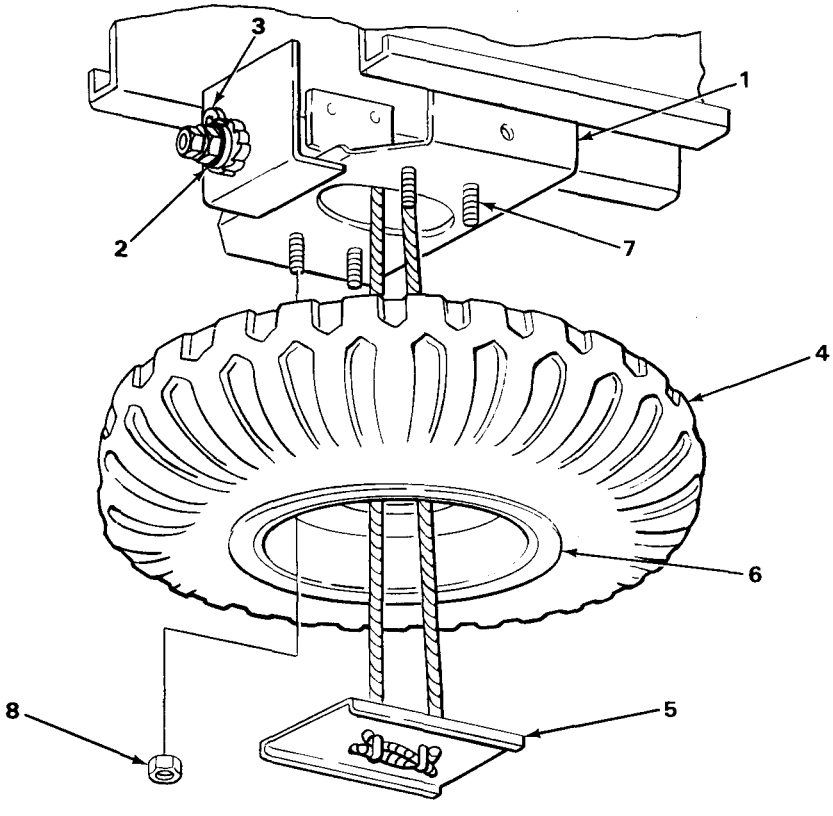

NOTE

FOLLOW-ON MAINTENANCE: Notify Organizational Maintenance of bad tire and wheel assembly.

TASK ENDS HERE

TA231226

LANDING GEAR LEGS

This task covers:

Cleaning (page 3-20)

INITIAL SETUP

Materials/Parts	Personnel Required
Brush, acid swabbing (item 4, appendix E) Rags, wiping (item 16, appendix E) Solvent, drycleaning PD-680 (item 18, appendix E)	One

LOCATION	ITEM	ACTION **REMARKS**
CLEANING		
Lower portion of landing gear leg (1) above shoe (2)	Landing gear leg (1)	a. Using rags, wipe off any buildup of grease and dirt.

WARNING

Drycleaning solvent PD-680 is both toxic and flammable. Avoid prolonged breathing of vapors, and avoid skin contact. Use only in well-ventilated area, and keep away from open flame or excessive heat. Injury to personnel could occur.

b. Using brush and drycleaning solvent, clean.
C. Allow to dry.
d. Lubricate in accordance with Lubrication Chart (page 4-5).

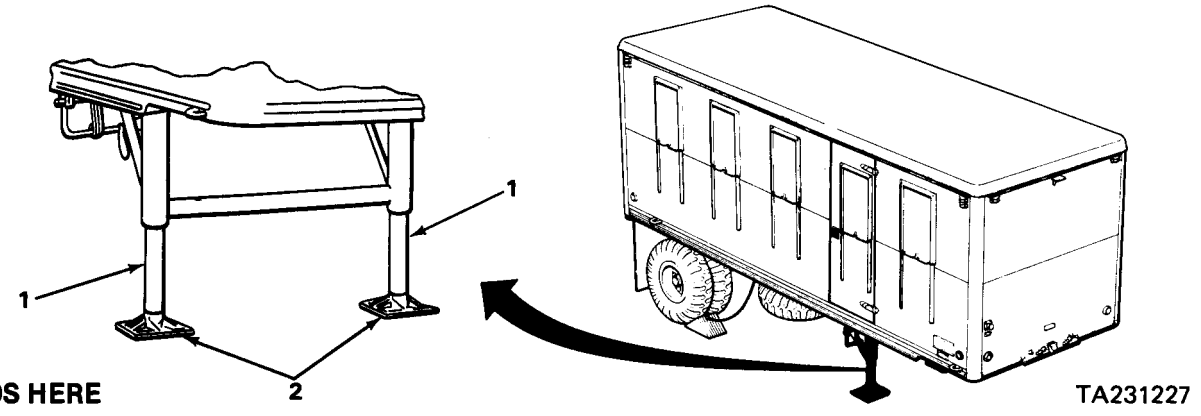

TASK ENDS HERE

LANDING GEAR LEGS

This task covers:

Cleaning (page 3-20)

INITIAL SETUP

Materials/Parts	Personnel Required
Brush, acid swabbing (item 4, appendix E) Rags, wiping (item 16, appendix E) Solvent, drycleaning PD-680 (item 18, appendix E)	One

LOCATION	ITEM	ACTION	REMARKS
CLEANING			
Lower portion of landing gear leg (1) above shoe (2).	Landing gear leg (1)	a. Using rags, wipe off any buildup of grease and dirt.	

WARNING

Drycleaning solvent PD-680 is both toxic and flammable. Avoid prolonged breathing of vapors, and avoid skin contact. Use only in well-ventilated area, and keep away from open flame or excessive heat. Injury to personnel could occur.

b. Using brush and drycleaning solvent, clean.
c. Allow to dry.
d. Lubricate in accordance with Lubrication Chart (page 4-5).

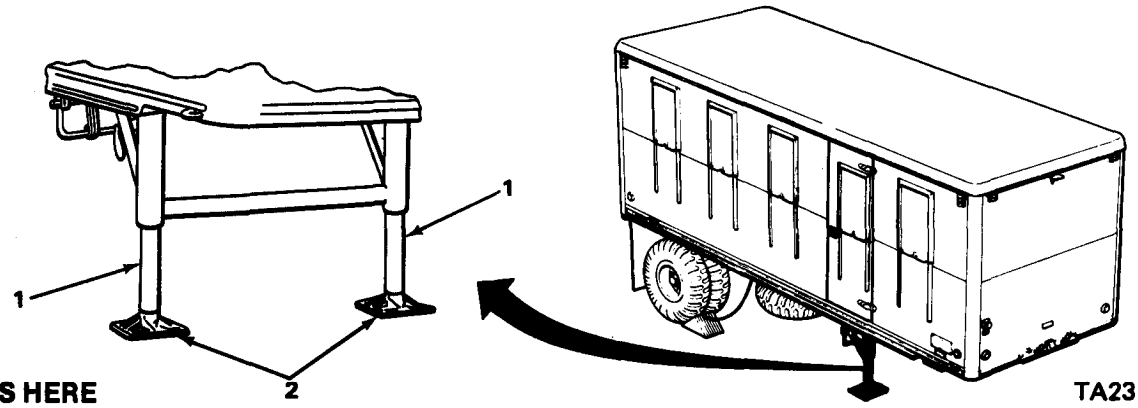

TASK ENDS HERE

TA231227

CHAPTER 4

ORGANIZATIONAL MAINTENANCE

OVERVIEW

This chapter contains all the maintenance authorized to be performed by Organizational Maintenance. Included are lubrication instructions, service upon receipt, preventive maintenance checks and services, troubleshooting, and maintenance procedures.

Section I. GENERAL MAINTENANCE INSTRUCTIONS

SCOPE

These General Maintenance instructions contain general shop practices and specific methods you must be familiar with to properly maintain the semitrailer. You should read and understand these practices and methods before starting organizational tasks on the semitrailer.

WORK SAFETY

Before starting a task, think about the risks and hazards to your safety as well as others. Wear protective gear such as safety goggles or lenses, safety shoes, rubber apron, or gloves.

WARNING

When lifting heavy parts, have someone help you. Make sure lifting/jacking equipment is working properly, is suitable for the task assigned, and is secured against slipping to avoid injury to personnel.

WORK SAFETY - CONTINUED

WARNING

Always use power tools carefully to prevent injury to personnel.

Observe all warnings and cautions.

GENERAL INFORMATION

Before beginning a task, find out how much repair, modification, or replacement is needed to fix the equipment as described in this manual. Sometimes the reason for equipment failure can be seen right away, and complete teardown is not necessary. Disassemble equipment only as far as necessary to repair or replace damaged or broken parts.

All tags and forms attached to the equipment must be checked to learn the reason for removal from service. Also, check Technical Bulletins (TB) for equipment changes and updates.

In some cases a part maybe damaged by removal. If the part appears to be good, and other parts behind it are not defective, leave it on and continue the procedure.

Here are some simple rules:

a. Don't take out dowel pins or studs unless loose, bent, broken, or otherwise damaged.

b. Don't pull bearings or bushings unless damaged. If you must get at parts behind them, pull out bearings or bushings carefully.

c. Replace all gaskets, seals, and preformed packings.

CLEANING INSTRUCTIONS

GENERAL

Cleaning instructions will be the same for the majority of parts and components which make up the semitrailer.

The importance of cleaning must be thoroughly understood by maintenance personnel. Great care and effort are required in cleaning. Dirt and foreign material are a constant threat to satisfactory maintenance, The following should apply to all cleaning, inspection repair, and assembly operations.

a. Clean all parts before inspection, after repair, and before assembly.

b. Hands should be kept free of any accumulation of grease, which can collect dust, dirt, or grit.

c. After cleaning, all parts should be covered or wrapped to protect them from dust and dirt. Parts which are subject to rust should be lightly oiled.

STEAM CLEANING

a. Protect all electrical equipment which could be damaged by steam or moisture before steam cleaning the exterior of the semitrailer.

CLEANING INSTRUCTIONS - CONTINUED

STEAM CLEANING - CONTINUED

b. Place disassembled parts in a suitable container to steam clean.

c. After cleaning, dry and cover (or lightly oil) all parts subject to rust.

CASTINGS, FORGINGS, AND MACHINED METAL PARTS

WARNING

Drycleaning solvent PD-680 is both toxic and flammable. Avoid prolonged breathing of vapors, and avoid skin contact. Use only in well-ventilated area, and keep away from open flame or excessive heat. Injury to personnel could occur.

a. Clean inner and outer surfaces with drycleaning solvent.

b. Remove grease and accumulated deposits with a stiff bristle brush.

WARNING

Particles blown by compressed air are hazardous. Make sure airstream is directed away from user and other personnel in the area. To prevent injury, user must wear protective goggles or face shield when using compressed air.

c. Blow out all tapped (threaded) holes with compressed air to remove dirt and cleaning fluids.

ELECTRICAL CABLES, FLEXIBLE HOSES, AND OIL SEALS

CAUTION

Washing oil seals, electrical cables, and flexible hoses with drycleaning solvents or mineral spirits will cause serious damage or destroy the material.

NOTE

Wash electrical cables and flexible hose with water and mild soap solution, and wipe dry. Oil seals are generally damaged during removal, so cleaning will not be necessary since new seals will be used in assembly.

BEARINGS

Refer to TM 9-214 for instructions and procedures covering care and maintenance of bearings.

INSPECTION INSTRUCTIONS

All components and parts must be carefully checked to determine:

a. If they are serviceable for reuse.

b. If they can be repaired.

c. If they must be replaced.

INSPECTION INSTRUCTIONS - CONTINUED

DRILLED AND TAPPED (THREADED) HOLES

a. Inspect for wear, distortion, cracks, or any other damage in or around holes.

b. Inspect threaded areas for wear, distortion (stretching), or evidence of cross-threading.

c. Mark all damaged areas for repair or replacement.

METAL LINES, FLEXIBLE LINES (HOSES), AND METAL FITTINGS

a. Inspect metal lines for sharp kinks, cracks, bad bends, or dents.

b. Inspect flexible lines for fraying, evidence of leakage, or loose metal fittings or connectors.

c. Check all metal fittings and connectors for thread damage, and check for hex heads that are worn or “rounded” by poorly fitting wrenches.

d. Mark all damaged material for repair or replacement.

CASTINGS, FORGINGS, AND MACHINED METAL PARTS

a. Inspect machined surfaces for nicks, burrs, raised metal, wear, or other damage.

b. Check all inner and outer surfaces for breaks or cracks.

c. Mark all damaged material for repair or replacement.

BEARINGS

Refer to TM 9-214 for inspection instructions and defect analysis.

TAGGING WIRES AND HOSES

a. As soon as first wire or hose is disconnected, write number 1 on two tags. Secure one tag to the wire or hose and the other tag to the terminal, nipple, or fitting. After disconnecting the second wire or hose, write number 2 on two tags. Secure one tag to wire or hose, and second tag to terminal, nipple, or fitting. Do the same for all the rest of the hoses and fittings.

b. Note what numbers you used, in pencil on a pad. This will help you to retag in the proper order when you remove the tags from some parts to perform cleaning and maintenance work Remove tags when finished.

REPAIR INSTRUCTIONS

NOTE

For accuracy, refer to Source, Maintenance, and Recoverability codes (SMR) assigned to support items listed in the Maintenance Repair Parts and Special Tools Lists (RPSTL) appendix F contained in this manual.

REPAIR INSTRUCTIONS - CONTINUED

Any repair procedure peculiar to a specific part or component is covered in the section or paragraph relating to that item. After repair, clean all parts throughly to prevent dirt, metal chips, or other foreign material from entering working parts.

CASTINGS, FORGINGS, AND MACHINED METAL PARTS

a. Minor cracked castings or forgings may possibly be repaired. Refer to TM 9-247.

b. Repair minor damage to machined surfaces with a fine mill file or crocus cloth dipped in dry-cleaning solvent.

c. Machined surfaces which are deeply nicked could affect the assembly operation and should be replaced.

d. Minor damage to threaded capscrew holes should be repaired with thread tap of same size, to prevent cutting oversize.

METAL LINES, FLEXIBLE LINES (HOSES), AND METAL FITTINGS

Refer to air line and airhose maintenance (page 4-117).

Section II. LUBRICATION INSTRUCTIONS

LUBRICATION INSTRUCTIONS

GENERAL. Keep all lubricants in closed containers, and store in a clean, dry place away from external heat. Keep container covers clean, and allow no dust, dirt, or other foreign material to mix with the lubricants. Keep all lubrication equipment clean and ready for use.

CLEANING. Keep all external parts not requiring lubrication free of lubricants. Before lubricating equipment, wipe all lubrication points free of dirt and grease. Clean all lubrication points after servicing to prevent accumulation of foreign matter.

LUBRICATION INTERVAL. Service the lubrication points at proper intervals as specified in the Lubrication Chart. The intervals specified are based on operation under usual conditions. Modification of the recommended intervals maybe required under unusual operating conditions.

LUBRICATION CHART

a. For lubrication under usual conditions, refer to the following chart.

b. For instructions on lubrication in weather below 0° Fahrenheit (F) (-18° Celsius (C)), refer to TM 9-207.

d. After operation in mud, dust, sand, or other unusual conditions, clean and inspect all lubrication points. Lubricate semitrailer in accordance with the Lubrication Chart.

LUBRICATION CHART

SEMITRAILER, VAN: SHOP, 6-TON, SINGLE AXLE M146 (NSN 2330-00-569-9372)

Hard-time intervals and the related man-hours are based on normal operation. The man-hour time specified is the time you need to do all the services prescribed for a particular interval. Change the interval if your lubricants are contaminated or if you are operating the equipment under adverse conditions, including longer-than-usual operating hours. The interval may be extended during periods of low activity. If extended, adequate preservation precautions must be taken.

Clean fittings before lubricating. Dotted arrow shafts indicate lubrication on both sides of equipment. Clean parts with drycleaning solvent PD-680. Type II, SD11. Dry before lubricating. The lowest level of maintenance authorized to lubricate a point is indicated by one of the following: (C) Operator/crew or (O) Organizational Maintenance.

WARNING

Drycleaning solvent is extremely flammable. Do not use near open flame. Use only in well-ventilated area and do not breathe vapors.

NOTE

LV is Localized View.

LUBRICANT • INTERVAL

INTERVAL • LUBRICANT

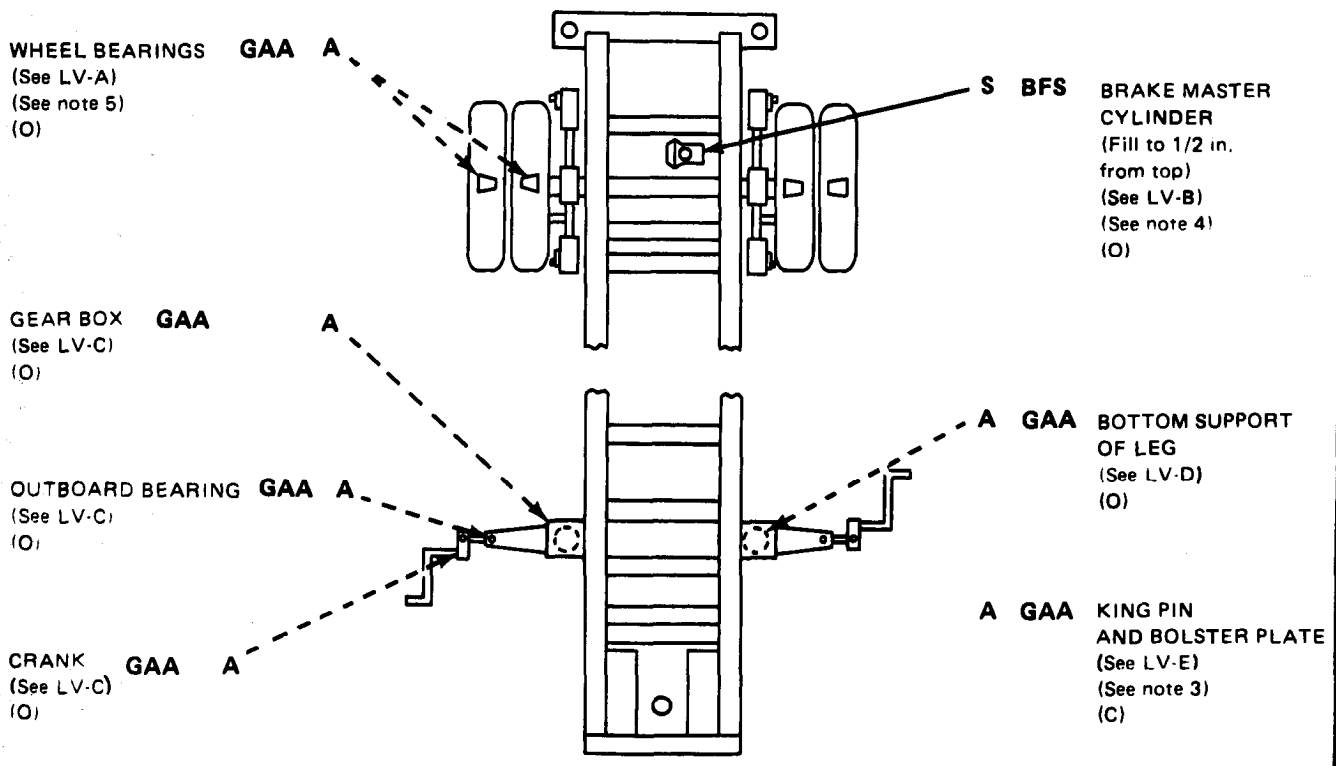

TOTAL MAN-HR		TOTAL MAN-HR	
INTERVAL	MAN-HR	INTERVAL	MAN-HR
W	0.5	S	0.2
M	0.6	A	7.3
Q	0.5		

TA231228

LUBRICATION CHART

–KEY–

LUBRICANTS		CAPACITIE	EXPECTED TEMPERA JRES: ABOVE +32° F (ABOVE 0°)	+40° TO-10° (-5° TO -23° C)	0° F TO -65° F (-18° C TO -54° C)	For arctic operations, refer to FM9-207	INTERVALS
GAA	Grease lubr. automotive and artillery		GAA	GAA	GAA		Intervals given in weekly,, monthly, quarterly,, semi-annually,, and annually.
BFS	Hydraulic Cylinder Fluid		BFS	BFS	BFS		
OE/HDO	Lubricating oil		OE/HDO 30	OE/HDO 10	OEA/AP6-PD-1		

WARNING

Drycleaning solvent is extremely flammable. Do not use near open flame. Use only in well-ventilated area and do not breathe vapors.

Notes:

1. For operation of semitrailer in protracted cold temperatures below -10° F (-23° C), remove lubricants prescribed in the key for temperatures above -10° F (-23° C). Clean parts with drycleaning solvent. Relubricate with lubricants specified in the key for temperatures 0° F to -65° F (-18° to -54° C).

2. OIL CAN POINTS. Every 1000 miles (1600 km) or monthly, lubricate hinges, springs, and wheel lugs with OE/HDO.

3. In sandy areas, halve lubrication intervals.

4. For information on converting brake system to silicon brake fluid (BFS), see TB 43-0002-87.

5. Annually remove, clean, dry, and repack wheel bearings.

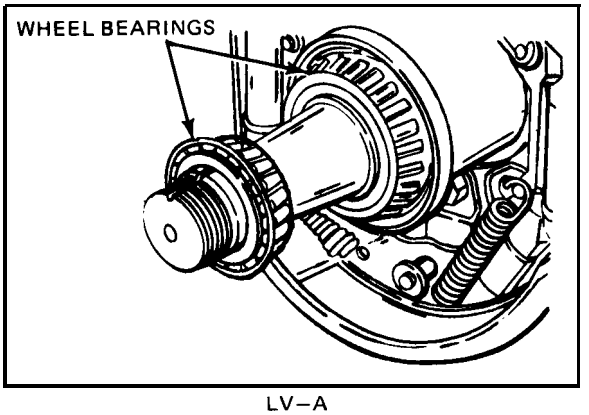

LV–A

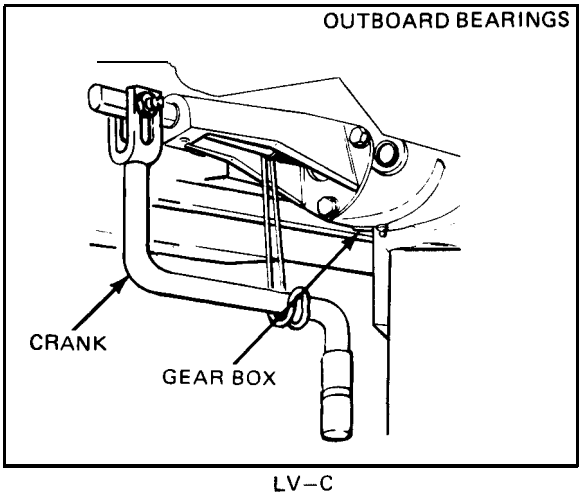

LV–C

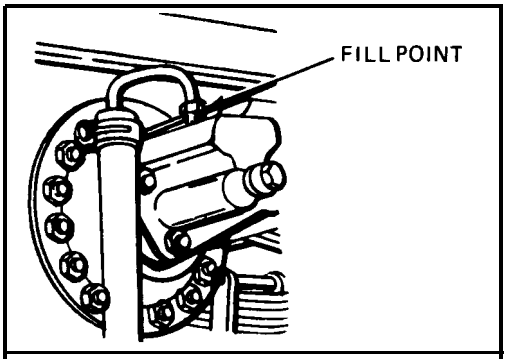

LV–B

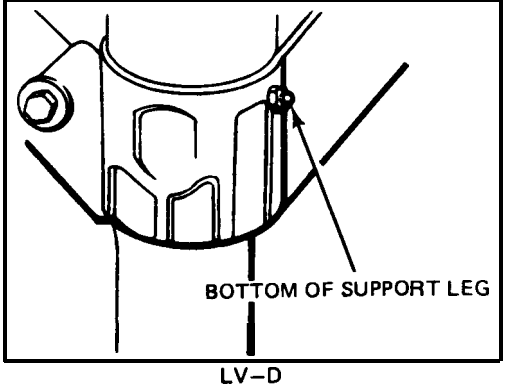

LV–D

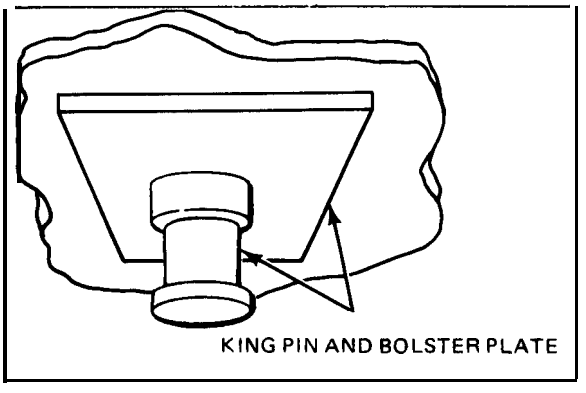

LV–E

Section III. REPAIR PARTS; SPECIAL TOOLS; TEST, MEASUREMENT AND DIAGNOSTIC EQUIPMENT (TMDE); AND SUPPORT EQUIPMENT

COMMON TOOLS AND EQUIPMENT

For authorized common tools and equipment, refer to Modified Table of Organization and Equipment (MTOE) applicable to your unit.

SPECIAL TOOLS, TMDE, AND SUPPORT EQUIPMENT

No special tools or test, measurement, and diagnostic equipment (TMDE) are required to maintain the semitrailer.

REPAIR PARTS

Repair parts are listed and illustrated in appendix F of this manual.

Section IV. SERVICE UPON RECEIPT

SERVICE UPON RECEIPT OF MATERIEL

LOCATION	ITEM	ACTION **REMARKS**
1. Attached to conspicuous part of semitrailer	DD Form 1397	Read, and follow all instructions.
2.	Metal strapping, plywood, tapes, seals, and wrappings	Remove.

SERVICE UPON RECEIPT OF MATERIEL - CONTINUED

LOCATION	ITEM	ACTION **REMARKS**

WARNING

Drycleaning solvent PD-680 is both toxic and flammable. Avoid prolonged breathing of vapors, and avoid skin contact. Use only in well-ventilated area, and keep away from open flame or excessive heat. Injury to personnel could occur.

3.	Coated exterior parts	Remove rust preventive compound with dry-cleaning solvent.
4.	Semitrailer	a. Inspect for damage received during shipping. b. If damage is found, submit DD Form 6, Package Improvement Report.
5.	Equipment packing slip	a. Check against equipment to see if shipment is complete. b. Report all discrepancies in accordance with instructions in DA PAM 738-750.

PRELIMINARY SERVICING AND ADJUSTMENT OF EQUIPMENT

Perform the Operator and Organizational Preventive Maintenance Checks and Services contained in chapters 3 and 4.

Lubricate all points as shown in the Lubrication Chart (page 4-5) regardless of interval.

Schedule the next Preventive Maintenance Checks and Services on DD Form 314, Preventive Maintenance Schedule and Record.

Report all deficiencies on DA Form 2407 if the deficiencies appear to involve unsatisfactory design.

Perform a break-in road test of 25 miles (40 kilometer (km)) at a maximum speed of 55 miles per hour (mph) (88.5 kilometers per hour (km/h)).

Section V. ORGANIZATIONAL PREVENTIVE MAINTENANCE CHECKS AND SERVICES (PMCS)

GENERAL

To make sure that your vehicle is ready for operation at all times, inspect it systematically so you can discover any defects and have them corrected before they result in serious damage or failure. The charts on the next few pages contain your organizational PMCS. The item numbers indicate the sequence of minimum inspection requirements. If you're operating the vehicle and notice something wrong that could damage the equipment if you continue operation, stop operation immediately.

Record all deficiencies and shortcomings, along with the corrective action taken, on DA Form 2404.

a. Do your(Q) PMCS once each 3 months.

b. Do your(S) PMCS once each 6 months.

If something doesn't work, troubleshoot it with the instructions in this manual

Always do your preventive maintenance in the same order, so it gets to be a habit. Once you've had some practice, you'll spot anything wrong in a hurry.

SPECIAL INSTRUCTIONS

If anything looks wrong and you can't fix it, write it down on your DA Form 2404 and report it to your supervisor.

WARNING

Drycleaning solvent PD-680 is both toxic and flammable. Avoid prolonged breathing of vapors, and avoid skin contact. Use only in well-ventilated area, and keep away from open flame or excessive heat. Injury to personnel could occur.

Particles blown by compressed air are hazardous. Make sure air stream is directed away from user and other personnel in the area. To prevent injury, user must wear protective goggles or face shield when using compressed air.

Keep the equipment clean. Dirt, grease, oil, and debris only get in the way and may cover up a serious problem. Clean as you work and as needed. Use drycleaning solvent PD-680 to clean metal surfaces. Use soap and water when you clean rubber or plastic material.

SPECIAL INSTRUCTIONS – CONTINUED

Bolts, nuts, and screws. Check that they are not loose, missing, bent, or broken. Tighten any that you find loose.

Welds. Look for gaps where parts are welded together. If you find a bad weld, repair it or report it to Direct Support Maintenance.

Electric wires and connectors. Look for cracked or broken insulation, bare wires, and loose or broken connectors. Tighten loose connections, and make sure the wires are in good condition.

Hoses and fluid lines. Look for wear, damage, and leaks. Make sure clamps and fittings are tight. Wet spots or stains around a fitting or connector can mean a leak. If a leak comes from a loose fitting or connector, tighten it. If something is broken or worn out, either correct it or report it to Direct Support Maintenance (see MAC, appendix B).

Fluid leaks affect the status of your equipment. The following are definitions of the types/classes of leakage you need to know to be able to determine the status of your equipment. Learn and be familiar with them.

LEAKAGE DEFINITIONS

Class 1	Seepage of fluid (indicated by wetness or discoloration) not great enough to form drops.
Class II	Leakage of fluid great enough to form drops, but not enough to cause drops to drip from the item being checked/inspected,
Class Ill	Leakage of fluid great enough to form drops that fall from the item being checked/inspected.

PMCS COLUMN DESCRIPTION

ITEM – The order that PMCS should be performed, and also used as a source of item numbers for the TM number column on DA Form 2404 Equipment Inspection and Maintenance Worksheet when recording results of PMCS.

INTERVAL – Tells when each check should be performed.

ITEM TO BE INSPECTED – Lists the checks to be performed.

ORGANIZATIONAL PREVENTIVE MAINTENANCE CHECKS AND SERVICES (PMCS)

Q – QUARTERLY S- SEMIANNUALLY

ITEM NO.	INTERVAL Q	INTERVAL S	ITEM TO BE INSPECTED PROCEDURE: CHECK FOR AND HAVE REPAIRED, FILLED, REPLACED, OR ADJUSTED AS NEEDED
			NOTE Perform Operator/Crew PMCS prior to or in conjunction with Organizational PMCS if: There is a delay between the daily operation of the equipment and the Organizational PMCS. Regular operator is not assisting or participating.
1			AIR OVER HYDRAULIC BRAKE SYSTEM a. Check all lines for leaks, kinks, cracks, and presence of mounting clamps. b. Check master cylinder (1) for secure mounting and leaks.
			NOTE Master cylinder (1) must be filled to within l/2-inch of top. See Lubrication Chart (page 4-5).

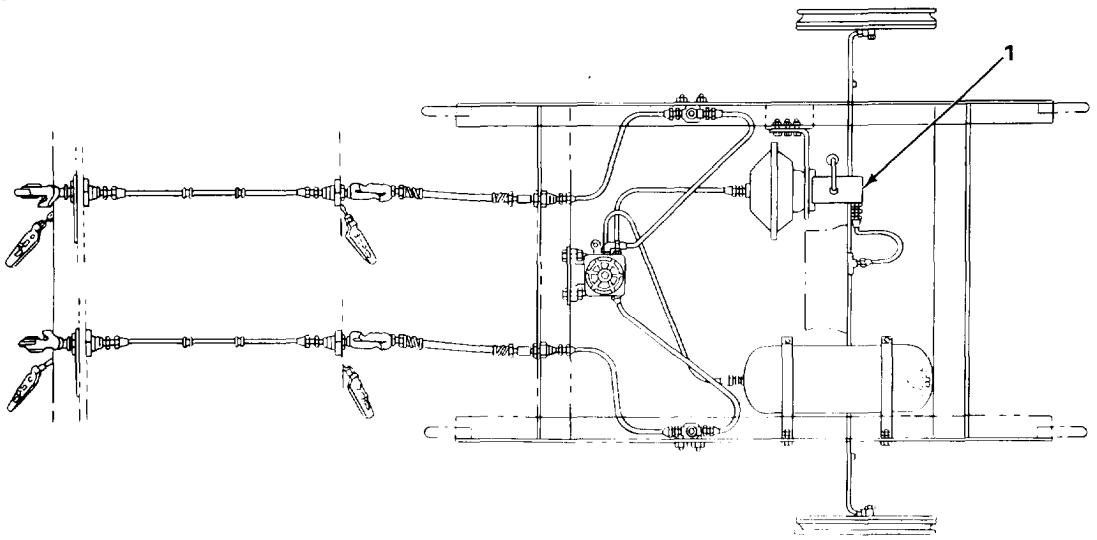

TA231230

ORGANIZATIONAL PREVENTIVE MAINTENANCE CHECKS AND SERVICES (PMCS) - CONTINUED

Q - QUARTERLY S - SEMIANNUALLY

ITEM NO.	INTERVAL Q	INTERVAL S	ITEM TO BE INSPECTED PROCEDURE: CHECK FOR AND HAVE REPAIRED, FILLED, REPLACED, OR ADJUSTED AS NEEDED
2			BRAKES AND WHEEL BEARINGS
	•		a. Check chamber (2) and lines (3) for dents, cracks, leaks, and corrosion.
		Ž	b. Inspect brake lining (4) thickness. Replace brakeshoe assembly if lining is within 0.0625 inch (1.59 millimeter (mm)) of rivet heads. Check drum (5) for evidence of overheating.
		Ž	c. Check for cracked hubs (6) and missing or loose wheel studs (7).
		Ž	d. Disassemble hub (6) and drum (5). Clean and repack wheel bearings (8) (page 4-143 and page 4-5).

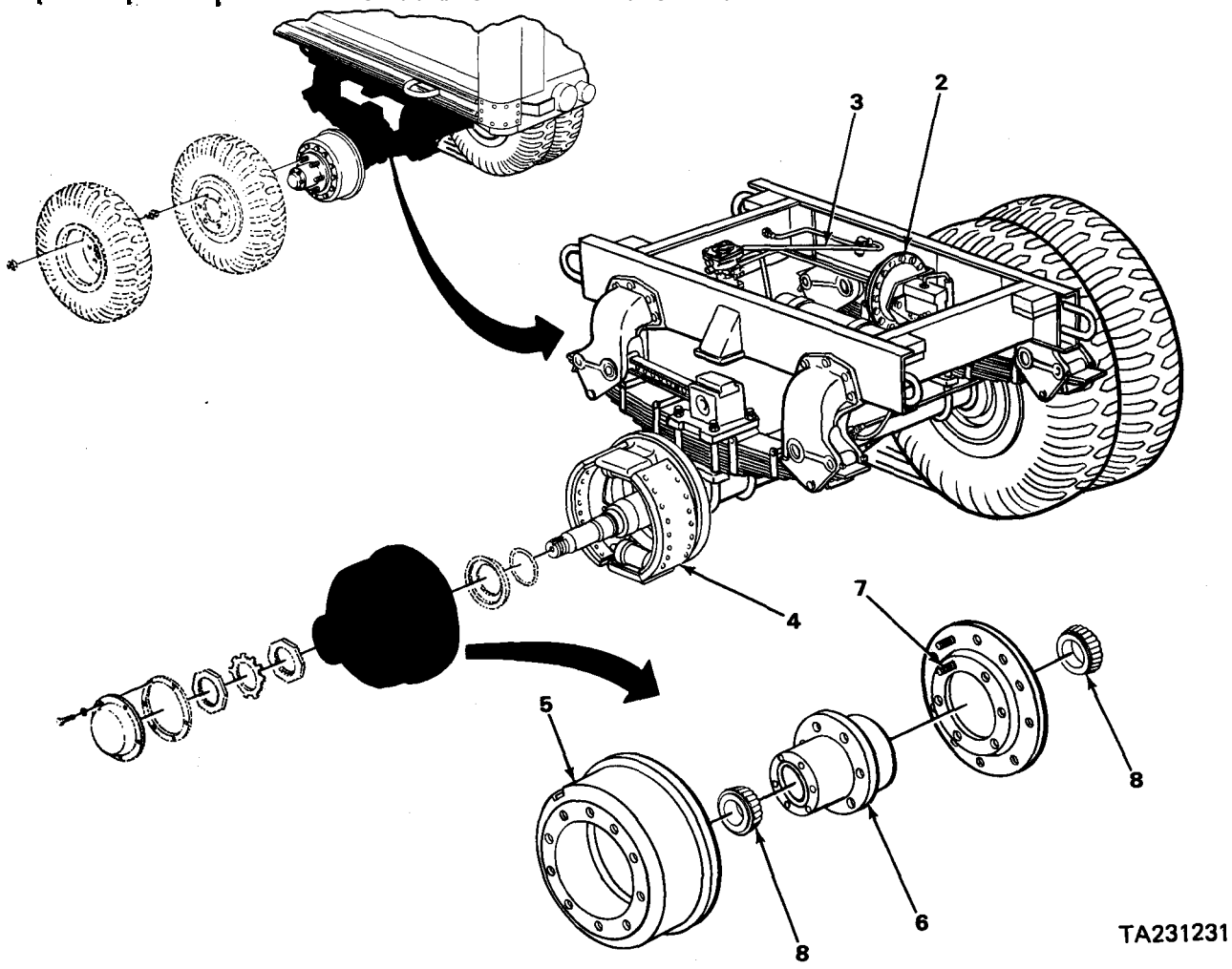

ORGANIZATIONAL PREVENTIVE MAINTENANCE CHECKS AND SERVICES (PMCS) - CONTINUED

Q - QUARTERLY S - SEMIANNUALLY

ITEM NO.	INTERVAL Q	INTERVAL S	ITEM TO BE INSPECTED PROCEDURE: CHECK FOR AND HAVE REPAIRED, FILLED, REPLACED, OR ADJUSTED AS NEEDED
3			KINGPIN
	Ž		a. Check kingpin(1) for cracks, nicks, or gouges deeper than 1/8-inch (3.175 mm). Make sure kingpin is securely mounted to kingpin plate (2). Check for any wear which decreases the diameter by 1/16-inch (1 .587 mm) or more.
	Ž		b. Check kingpin plate (2) for cracks and lubrication.

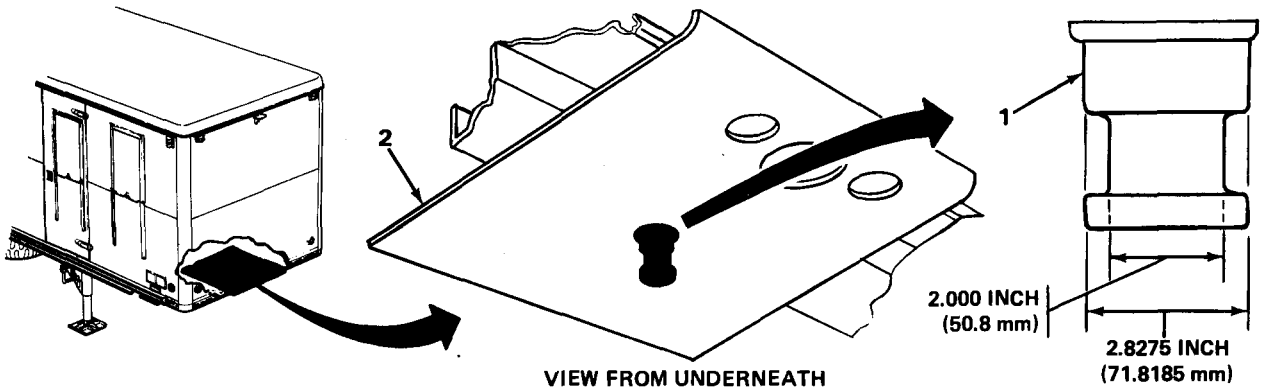

4			SPRINGS AND SUSPENSION
	Ž		a. Check for weak or sagging springs (3) and broken leaves (4).
	Ž		b. Check for loose or missing clips (5) or shifted leaves (4).
	Ž		c. Check radius rods (6) for damage.
	Ž		d. Check for broken U-bolts (7).
	Ž		e. Tighten U-bolts, clip assemblies, and all mounting bolts.

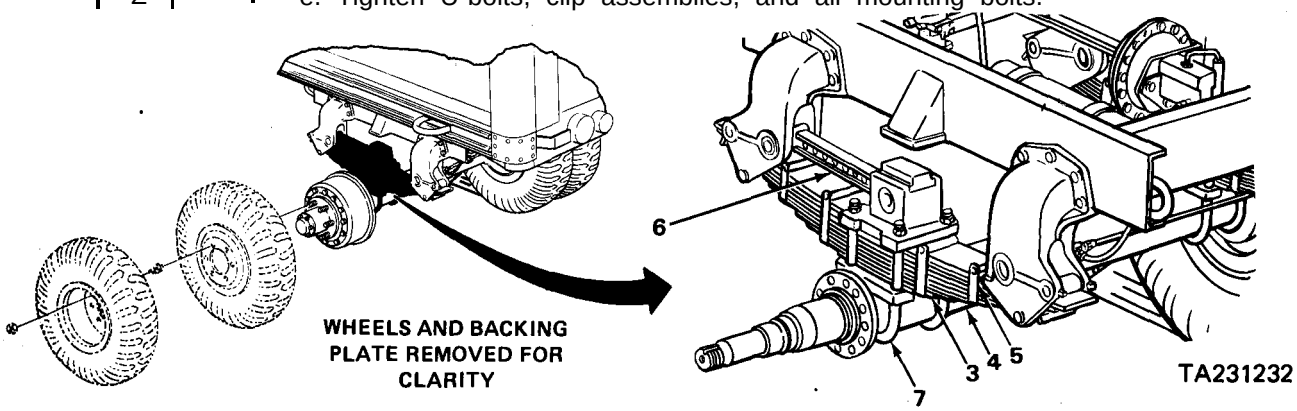

ORGANIZATIONAL PREVENTIVE MAINTENANCE CHECKS AND SERVICES (PMCS) - CONTINUED

Q - QUARTERLY S - SEMIANNUALLY

ITEM NO.	INTERVAL Q	INTERVAL S	ITEM TO BE INSPECTED PROCEDURE: CHECK FOR AND HAVE REPAIRED, FILLED, REPLACED, OR ADJUSTED AS NEEDED
5			WHEELS AND TIRES
	●		a. Inspect tires (8) for signs of uneven wear.
		Ž	b. Rotate and match tires (8) according to tread design and degree of wear to ensure safety and extended tire life.
		Ž	c. Inspect wheels (9) for worn studs (10) and nuts (11), and for breaks and corrosion.

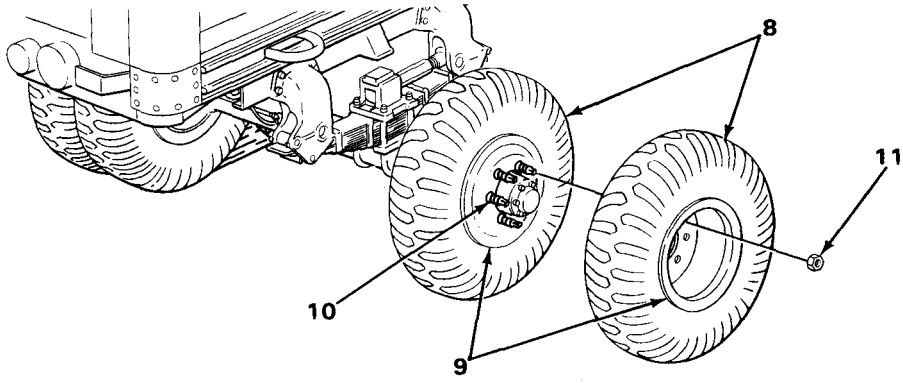

6			GENERAL OPERATION
			a. Refer to Lubrication Chart (page 4-5), and perform lubrication at suggested intervals.
	Ž		b. Perform a road test of semitrailer. Be alert at all times during the test for unusual or excessive noises that may indicate damage, looseness, defects, or deficient lubrication. Give special attention to items that were repaired or adjusted. Make several stops noting side pull, noise, chatter, or other unusual conditions.
	Ž		c. Disconnect airhoses from towing vehicle, and note if semitrailer brakes apply (page 2-26). Semitrailer brakes will set automatically when emergency airhose coupling is disconnected.

TA231233

Section VI. ORGANIZATIONAL TROUBLESHOOTING PROCEDURES

INTRODUCTION

The table in this section lists common malfunctions that maybe found during operation or maintenance of semitrailer or components. You should perform test/inspections and corrective actions in the order listed.

This manual cannot list all malfunctions that may occur, nor all tests or inspections and corrective actions. If a malfunction is not listed or it is not corrected by the listed corrective actions, notify your supervisor.

EXPLANATION OF COLUMNS

MALFUNCTION	Visual or operational indication that something is wrong with the trailer.
TEST/INSPECTION	Procedure to isolate the problem to a component or system.
CORRECTIVE ACTION	Procedure to correct problem.

SYMPTOM INDEX

This symptom index is provided as a quick way to get you to the part of the troubleshooting table that will help you solve the problem you are having. It lists all the malfunctions covered in the Organizational Troubleshooting table.

SYMPTOM INDEX - CONTINUED

TIRES

LANDING GEAR

ORGANIZATIONAL TROUBLESHOOTING

The following table provides procedures the organizational mechanic can use to locate and correct semitrailer malfunctions. Semitrailer must be hooked up with towing vehicle or power source when electrical or brake system tests are performed. For electrical tests, towing vehicle lights must be turned on.

ORGANIZATIONAL TROUBLESHOOTING

MALFUNCTION TEST OR INSPECTION CORRECTIVE ACTION
ELECTRICAL SYSTEM, 24-VOLT
1. ALL LIGHTS DO NOT WORK
Step 1. Check the tractor-to-semitrailer cable. Using multimeter set to read voltage, put black probe on ground contact and red probe on other contacts.
If multimeter measurement is not approximately 24-volts direct current (vdc), perform towing vehicle troubleshooting.
Step 2. Check ground wire end from connector receptacle.
a. If ground is loose, clean and tighten.
b. If ground is broken, notify Direct Support Maintenance.
Step 3. Check ground wire on connector receptacle using multimeter set to read continuity. Put red probe on ground contact D and black probe on ground wire end.
a. If multimeter shows no continuity, notify Direct Support Maintenance.
b. If ground wire is good and the lights do not work, wire harness needs replacing. Notify Direct Support Maintenance.

ORGANIZATIONAL TROUBLESHOOTING - CONTINUED

MALFUNCTION
TEST OR INSPECTION
CORRECTIVE ACTION

2. ONE OR MORE, BUT NOT ALL LIGHTS WILL NOT WORK

Step 1. Check tractor-to-semitrailer cable. Using multimeter set to read voltage, put black probe on ground contact and red probe on other contacts.

If multimeter measurement is not approximately 24-vdc on all contacts, perform truck tractor troubleshooting.

Step 2. Check semitrailer connector receptacle for bent, broken, or dirty or corroded pins.

a. If pins are dirty or corroded, clean (page 3-8).

b. If pins are broken or there is any evidence of damage, notify Direct Support Maintenance.

Step 3. Check which lights do not work, and compare to Electrical Schematic Diagram (page 4-78).

a. For inside domelights, notify Direct Support Maintenance.

b. If all lights on the same circuit are out, circuit needs replacement. Notify Direct Support Maintenance.

Step 4. Take door assembly off light assembly, pull lamp out of socket, and check for corroded or damaged socket.

If lamp socket is corroded, clean; if damaged, replace (page 4-31).

Step 5. Using multimeter set to read voltage, put red probe on socket contact and black probe to good ground.

If multimeter measurement is approximately 24-vdc, replace lamp (page 4-31).

Step 6. Put door assembly back on light assembly. Light assembly may have to be removed (page 4-31). Pull apart wire harness connector at inoperative lamp noting band marker number. Using multimeter set to read voltage, put red probe on wire harness terminal and black probe to good ground.

ORGANIZATIONAL TROUBLESHOOTING - CONTINUED

MALFUNCTION
TEST OR INSPECTION
CORRECTIVE ACTION

2. ONE OR MORE, BUT NOT ALL LIGHTS WILL NOT WORK - CONTINUED

Step 6. Continued

a. If multimeter measurement is approximately 24-vdc, pull back light assembly shell. If connector is damaged, repair (page 4-31). If terminal is not damaged, replace light assembly (page 4-31).

b. If multimeter measurement is not approximately 24-vdc, notify Direct Support Maintenance.

3. DIM OR FLICKERING LIGHTS

Check for loose or damaged ground coming off connector receptacle.

a. If ground is loose, clean and tighten.

b. If ground is damaged, notify Direct Support Maintenance.

ELECTRICAL SYSTEM 110-VOLT (EARLY AND LATE M146)

4. ALL LIGHTS DO NOT WORK, EARLY M146

Step 1. Using multimeter set to read voltage, check power source to make sure there is approximately 110-Volts alternating current (vac) coming to the semitrailer.

If multimeter measurement is not approximately 110-vac, troubleshoot power source.

Step 2. Check connector receptacle for damage.

If receptacle is damaged, replace (page 4-76).

Step 3. Check junction boxes to make sure all circuit breakers are on.

If circuit breakers are off, turn on (page 2-8).

Step 4. Check switches to make sure they are on.

If switches are off, turn on (page 2-8).

ORGANIZATIONAL TROUBLESHOOTING - CONTINUED

MALFUNCTION TEST OR INSPECTION	CORRECTIVE ACTION

4. ALL LIGHTS DO NOT WORK, EARLY M146 - CONTINUED

Step 5. Using multimeter set to read voltage, put red probe on one contact for outside receptacle and black probe on the other.

If multimeter measurement is not approximately 110-Vac, replace receptacle (page 4-76).

Step 6. Unplug power source. Using multimeter set to read continuity, put red probe on one end of wire leading from left side of connector receptacle to left main circuit breaker and black probe on other end.

If multimeter reads no continuity, notify Direct Support Maintenance.

Step 7. Repeat step 6 for wire leading from right side of connector receptacle to right main circuit breaker.

Step 8. Using multimeter set to read continuity, put red probe on one contact of left main circuit breaker and black probe on the other.

If multimeter reads no continuity, replace circuit breaker (page 4-40).

Step 9. Repeat step 8 for right main circuit breaker.

Step 10. Repeat step 8 for branch circuit breaker number 1.

Step 11. Using multimeter set to read continuity, put red probe on one end of wire leading from right main circuit breaker to number 1 breaker in branch circuit breaker box and black probe on the other end.

If multimeter reads no continuity, notify Direct Support Maintenance.

Step 12. Using multimeter set to read continuity, put red probe on one end of wire leading from number 1 circuit breaker to front blackout switch and black probe on the other end.

ORGANIZATIONAL TROUBLESHOOTING - CONTINUED

MALFUNCTION
TEST OR INSPECTION
CORRECTIVE ACTION

4. ALL LIGHTS DO NOT WORK, EARLY M146 - CONTINUED

Step 12. Continued

If multimeter reads no continuity, notify Direct Support Maintenance.

Step 13. a. Remove front blackout switch (page 4-35). Using multimeter set to read continuity, put red probe in contact on side with just one contact. Put black probe in one of the contacts on other side. Check reading on multimeter. Flip switch, and check reading again.

b. Repeat step 13a, putting black probe in the other contact on that side.

If multimeter reads no continuity in either step 13a or 13b, replace switch (page 4-35).

Step 14. Install front blackout switch (page 4-35). Repeat steps 13a and 13b for rear blackout switch.

Install rear blackout switch (page 4-35).

Step 15. Using multimeter set to read continuity, put red probe on one end of wire leading from rear blackout switch to far side of right rear light (ground side) and black probe on other end.

If multimeter reads no continuity, notify Direct Support Maintenance.

Step 16. Using multimeter set for continuity, put red probe on one end of wire leading from rear blackout switch to left main circuit breaker and black probe on the other end.

If multimeter reads no continuity, notify Direct Support Maintenance.

5. ALL LIGHTS DO NOT WORK, LATE M146

Step 1. Using multimeter set to read voltage, check power source to make sure there is approximately 110-vac coming to the semitrailer.

If multimeter measurement is not approximately 110-vac, troubleshoot power source.

ORGANIZATIONAL TROUBLESHOOTING - CONTINUED

MALFUNCTION
TEST OR INSPECTION
CORRECTIVE ACTION

5. ALL LIGHTS DO NOT WORK, LATE M146 - CONTINUED

Step 2. Check connector receptacle for damage.

If receptacle is damaged, replace (page 4-76).

Step 3. Check junction boxes to make sure all circuit breakers are on.

If circuit breakers are off, turn on (page 2-8).

Step 4. Check switches to make sure they are on.

If switches are off, turn on (page 2-8).

Step 5. Using multimeter set to read voltage, put red probe on one contact for outside receptacle and black probe on the other.

If multimeter measurement is not approximately 110-vac, replace receptacle (page 4-76).

Step 6. Unplug power source, Using multimeter set to read continuity, put red probe on one end of wire leading from left side of connector receptacle to left main circuit breaker and black probe on other end.

If multimeter reads no continuity, notify Direct Support Maintenance.

Step 7. Repeat step 6 for wire leading from right side of connector receptacle to right main circuit breaker.

Step 8. Using multimeter set to read continuity, put red probe on one side of left main circuit breaker and black probe on the other.

If multimeter reads no continuity, replace circuit breaker (page 4-40).

Step 9. Repeat step 8 for right main circuit breaker.

ORGANIZATIONAL TROUBLESHOOTING - CONTINUED

MALFUNCTION
TEST OR INSPECTION
CORRECTIVE ACTION

5. ALL LIGHTS DO NOT WORK, LATE M146 - CONTINUED

Step 10. Repeat step 8 for branch circuit breaker number 3.

Step 11. Using multimeter set to read continuity, put red probe on one end of wire leading from right main circuit breaker to number 3 breaker in branch circuit breaker box and black probe on the other end.

If multimeter reads no continuity, notify Direct Support Maintenance.

Step 12. Using multimeter set to read continuity, put red probe on one end of wire leading from number 3 circuit breaker to front ON/OFF switch and black probe on the other end.

If multimeter reads no continuity, notify Direct Support Maintenance.

Step 13. a. Remove front ON/OFF switch (page 4-35). Using multimeter set to read continuity, put red probe in contact on side with just one contact. Put black probe in one of the contacts on other side. Check reading on multi meter. Flip switch, and check the reading again.

b. Repeat step 13a, putting black probe in the other contact on that side.

If multimeter reads no continuity with either step 13a or 13b, replace switch (page 4-35).

Step 14. Install front ON/OFF switch (page 4-35). Repeat steps 13a and 13b for rear ON/OFF switch.

Step 15. Install rear ON/OFF switch (page 4-35). Repeat steps 13a and 13b for ON/OFF blackout switch.

Step 16. Install ON/OFF blackout switch (page 4-35). Using multimeter set to read continuity, put red probe on one end of wires leading from front ON/OFF to back ON/OFF switch and black probe on the other.

If multimeter reads no continuity, notify Direct Support Maintenance.

ORGANIZATIONAL TROUBLESHOOTING - CONTINUED

MALFUNCTION
TEST OR INSPECTION
CORRECTIVE ACTION

5. ALL LIGHTS DO NOT WORK (LATE M146) - CONTINUED

Step 17. Repeat step 16 for the other wire leading from front ON/OFF switch to back ON/OFF switch.

Step 18. Using multimeter set to read continuity, put red probe on one end of wire leading from rear ON/OFF switch to blackout ON/OFF switch and black probe on the other end.

If multimeter shows no continuity, notify Direct Support Maintenance.

Step 19. Using multimeter set to read continuity, put red probe on one end of wire leading from blackout ON/OFF switch to right rear light and black probe on the other end.

If multimeter shows no continuity, notify Direct Support Maintenance.

Step 20. Using multimeter set to read continuity, put red probe on one end of wire leading from right front light to bus bar in right junction box and black probe on the other end.

If multimeter shows no continuity, notify Direct Support Maintenance.

Step 21. Remove wires from bus bar in right junction box. Using multimeter set to read continuity, put red probe on one end of bus bar and black probe on the other end.

a. If multimeter shows no continuity, replace junction box (page 4-42).

b. If multimeter shows continuity, replace wire leading from bus bar in right junction box to left main circuit breaker. If circuit breaker needs replacement, notify Direct Support Maintenance.

ORGANIZATIONAL TROUBLESHOOTING - CONTINUED

MALFUNCTION
TEST OR INSPECTION
CORRECTIVE ACTION

6. ONE OR MORE, BUT NOT ALL LIGHTS WILL NOT WORK

Step 1. Check switches to make sure they are on. If switches are off, turn on (page 2-8).

NOTE

Perform troubleshooting steps 2 thru 4 for all lights not working.

Step 2. Go to light not working and pull cover off lens. Take out lamp.

If there are obvious signs of damage to lamp or sockets, disconnect power supply and notify Direct Support Maintenance.

Step 3. Using multimeter set to read voltage, put red probe on contact for lamp socket and black probe on ground.

If multimeter does not read approximately 110-vac, replace lamp (page 4-31).

Step 4. Using multimeter set to read voltage, put red probe on power wire coming into light assembly and black probe on ground wire.

If multimeter does not read approximately 110-vac, replace light assembly (page 4-31).

Step 5. Disconnect power source. Using multimeter set to read continuity, put red probe on one end of wire for light closest to rear and black probe on the other end of wire on the same side where it connects to closest working light in that row.

a. If multimeter shows no continuity, wire needs replacement. Notify Direct Support Maintenance.

b. If multimeter shows continuity, wire on other side needs replacement. Notify Direct Support Maintenance.

Step 6. Repeat step 5 for lights in the other row.

ORGANIZATIONAL TROUBLESHOOTING - CONTINUED

MALFUNCTION
TEST OR INSPECTION
CORRECTIVE ACTION

7. DIM OR FLICKERING LIGHTS

Check for loose or damaged ground coming off connector receptacle.

a. If ground is loose, clean and tighten.

b. If ground is broken, notify Direct Support Maintenance.

8. ALL RECEPTACLES DO NOT WORK

Step 1. Using multimeter set to read voltage, check power source to make sure there is approximately 110-vac coming to the semitrailer.

If multimeter measurement is not approximately 110-vac, troubleshoot power source.

Step 2. Check connector receptacle for damage.

If damaged, replace receptacle (page 4-31).

Step 3. Check junction boxes to make sure all circuit breakers are on.

If circuit breakers are off, turn on (page 2-8).

Step 4. Using multimeter set to read voltage, put red probe on one contact for the outside receptacle and black probe on the other.

If multi meter measurement is not approximately 110-vac, replace receptacle (page 4-31).

Step 5. Unplug power source. Using multimeter set to read continuity, put red probe on one end of wire leading from left side of connector receptacle to left main circuit breaker and black probe on the other end.

If muitimeter reads no continuity, notify Direct Support Maintenance.

Step 6. Repeat step 5 for wire leading from right side of connector receptacle to right main circuit breaker.

ORGANIZATIONAL TROUBLESHOOTING - CONTINUED

MALFUNCTION
TEST OR INSPECTION
CORRECTIVE ACTION

8. ALL RECEPTACLES DO NOT WORK - CONTINUED

Step 7. Using multimeter set to read continuity, put red probe on one contact of left main circuit breaker and black probe on the other.

If multimeter reads no continuity, replace circuit breaker (page 4-40).

Step 8. Repeat step 7 for right main circuit breaker.

If receptacles still do not work, wire leading from left main circuit breaker, to place where wall receptacles splice in, needs to be replaced. Notify Direct Support Maintenance.

9. ONE OR MORE, BUT NOT ALL RECEPTACLES WILL NOT WORK

Step 1. Check junction boxes to make sure all circuit breakers are on.

If circuit breakers are off, turn on (page 2-8).

NOTE

If all receptacles are out on one side, do the following steps. If not, go to step 4.

Unplug power source.

Step 2. Using multimeter set to read continuity, put red probe on one contact of branch circuit breaker which controls receptacles and black probe on the other contact.

If multimeter reads no continuity, replace circuit breaker (page 4-40).

Step 3. Using multimeter set to read continuity, put red probe on one end of wire leading from branch circuit breaker which controls receptacles to the first receptacle and black probe on the other end.

If multimeter reads no continuity, notify Direct Support Maintenance.

ORGANIZATIONAL TROUBLESHOOTING - CONTINUED

MALFUNCTION
TEST OR INSPECTION
CORRECTIVE ACTION

9. ONE OR MORE, BUT NOT ALL RECEPTACLES WILL NOT WORK - CONTINUED

Step 3. Continued

If receptacles still do not work, the wire leading from receptacles to ground wire needs replacement. Notify Direct Support Maintenance.

NOTE

Perform the following steps to all receptacles which do not work.

Step 4. Using multimeter set to read continuity, put red probe in one contact and black probe in the other.

If multimeter shows continuity, replace receptacle (page 4-32).

Step 5. Using multimeter set to read continuity, put red probe on one end of wire for receptacle closest to rear and black probe on other end of wire on the same side where it connects to the closest working receptacle in that row.

a. If multimeter shows no continuity, wire needs replacement. Notify Direct Support Maintenance.

b. If multimeter shows continuity, wire on other side needs replacement. Notify Direct Support Maintenance.

AIR OVER HYDRAULIC BRAKE SYSTEM

10. BRAKES WILL NOT APPLY OR RELEASE

Step 1. Check towing vehicle brake system to make sure it is operating correctly.

If brake system is not operating correctly, troubleshoot towing vehicle.

Step 2. Check intervehicular air connectors to make sure they are hooked up correctly to towing vehicle.

If intervehicular air connectors are not hooked up correctly, hook them up correctly (page 2-19).

ORGANIZATIONAL TROUBLESHOOTING - CONTINUED

MALFUNCTION
TEST OR INSPECTION
CORRECTIVE ACTION

10. BRAKES WILL NOT APPLY OR RELEASE - CONTINUED

Step 3. Check draincock on air reservoir.

If it is open, close (page 2-13).

If it is damaged, replace (page 4-133).

Step 4. Check for damaged or leaking air reservoir. Use soap solution, and coat seams.

If air reservoir is leaking, replace (page 4-131).

Step 5. Check master cylinder for damage or leaks.

If master cylinder is damaged or leaking, replace (page 4-100).

Step 6. Check fluid level in master cylinder (page 4-12).

If fluid level in master cylinder is low, fill to proper level (page 4-5).

Step 7. Check air lines and fittings for breaks, damage, or leaking air pressure. Use visual checks and soap solution.

a. If fittings are loose, tighten

b. If air lines and fittings are damaged or leaking, replace or repair (page 4-117).

Step 8. Check for damaged air filters.

If air filters are damaged, replace (page 4-135).

Step 9. Have assistant apply and release towing vehicle brakes. Emergency relay valve should vent air through exhaust port when towing vehicle brakes are released.

If air is not vented from relay valve when tractor brakes are released, replace relay valve (page 4-140).

ORGANIZATIONAL TROUBLESHOOTING - CONTINUED

MALFUNCTION
TEST OR INSPECTION
CORRECTIVE ACTION

10. BRAKES WILL NOT APPLY OR RELEASE - CONTINUED

Step 10. Check airbrake chamber for damage.

If airbrake chamber is damaged, replace (page 4-114).

Step 11. Have assistant apply towing brakes. Stand by airbrake chamber, and check for leaks by listening for hissing sound.

If airbrake chamber leaks, notify Direct Support Maintenance.

Step 12. Check hydraulic brake lines and fittings for breaks, damage or leaks.

a. If fittings are loose, tighten

b. If hydraulic tubes and fittings are damaged, replace (page 4-108).

Step 13. Remove hub and drum. Check brake mechanism for damaged or broken parts (page 4-143).

If parts are broken or damaged, replace (page 4-143).

11. BRAKES GRAB

Step 1. Check brake adjustment.

If brakes are out of adjustment, adjust brakes (page 4-80).

Step 2. Remove hub and drum, and check for grease or dirt on brake linings (page 4-143).

If grease or dirt is present, replace brakeshoes (page 4-80).

Step 3. Check for worn or loose brake linings.

If linings are worn to within 0.0625-inch (1 .587 mm) above rivets or linings are loose, notify Direct Support Maintenance.

Step 4. Check brakedrum for damage and signs of warpage.

If brakedrum is damaged, replace (page 4-143).

ORGANIZATIONAL TROUBLESHOOTING - CONTINUED

MALFUNCTION
TEST OR INSPECTION
CORRECTIVE ACTION

TIRES

12. EXCESSIVELY WORN, SCUFFED, OR CUPPED TIRES

Step 1. Check tire pressure.

If tire pressure is low, inflate tire to proper pressure (page 2-16).

Step 2. Check if wheel lugs are tight.

If wheel lugs are loose, tighten (page 4-148).

Step 3. Check for bent axle.

If axle is bent, notify Direct Support Maintenance.

LANDING GEAR

13. LANDING GEAR IS DIFFICULT TO RAISE OR LOWER

Check if landing gear is lubricated.

a. If landing gear is not lubricated, lubricate (page 4-5).

b. If landing gear is still difficult to raise or lower, notify Direct Support Maintenance.

Section VII. ELECTRICAL SYSTEM MAINTENANCE

WALL RECEPTACLES AND BASE, 11O-VOLT

This task covers:

a. Removal (page 4-32)
b. Installation (page 4-33)

INITIAL SETUP

Tools

Drill, electric, portable, 1/2-inch
Drill, twist, 3/16-inch
Hacksaw, hand
Hammer, hand, ball-peen
Pliers, diagonal cutting

Tools - Continued

Screwdriver, cross-tip, number two
Screwdriver, flat-tip, 3/16-inch

Personnel Required

One

LOCATION	ITEM	ACTION REMARKS

WARNING

Contact with live 110-volt electrical wires could result in serious injury or death. Make sure power source is disconnected before performing maintenance on the electrical system.

NOTE

All wall receptacles and bases are removed and installed the same way. This task is for one section; repeat for the others.

REMOVAL

1.	Base (1)	Two covers (2)	Using 3/16-inch flat-tip screwdriver, pry off.

NOTE

Tag wires to aid in installation (page 4-4). If circuit marker bands are missing or not readable, replace (page 4-73).

2.	Wall receptacle (3)	Screw (4)	Using 3/16-inch flat-tip screwdriver, unscrew one-quarter turn.
3.		Wall receptacle (3) and two wires (5)	Take off.
4.	Wall receptacle (3)	Two contact screws (6) and two wires (5)	a. Using 3/16-inch flat-tip screwdriver unscrew screws (6) part way b. Pull wires (5) off screws (6).

WALL RECEPTACLES AND BASE, 110-VOLT - CONTINUED

LOCATION	ITEM	ACTION **REMARKS**
REMOVAL - CONTINUED		
	NOTE	
	If replacing only one wall receptacle, go to step 15. If replacing a section of wall receptacles, repeat steps 1 thru 4 for each wall receptacle being replaced.	
5.	Elbow cover (7)	Using 3/16-inch flat-tip screwdriver, pry off.
6. Elbow (8) and base (1)	Two screws (9)	Using 3/16-inch flat-tip screwdriver, unscrew and take out.
7. Base (1)	Three screws (10)	Using number two cross-tip screwdriver, unscrew and take off.
8. Van body (11)	Base (1)	a. Using diagonal cutting pliers, cut damaged section. b. Take off.
9. Base (1) and van body (11)	Elbow (8)	Take off.
INSTALLATION		
10. Van body (11)	Base (1)	a. Measure section to be replaced. b. Using hand hacksaw, cut base (1). c. Measure position of screw holes on van body (11), and mark base (1). d. Using portable drill and 3/16-inch twist drill, drill holes in base (1) at guide marks. e. Put in place.

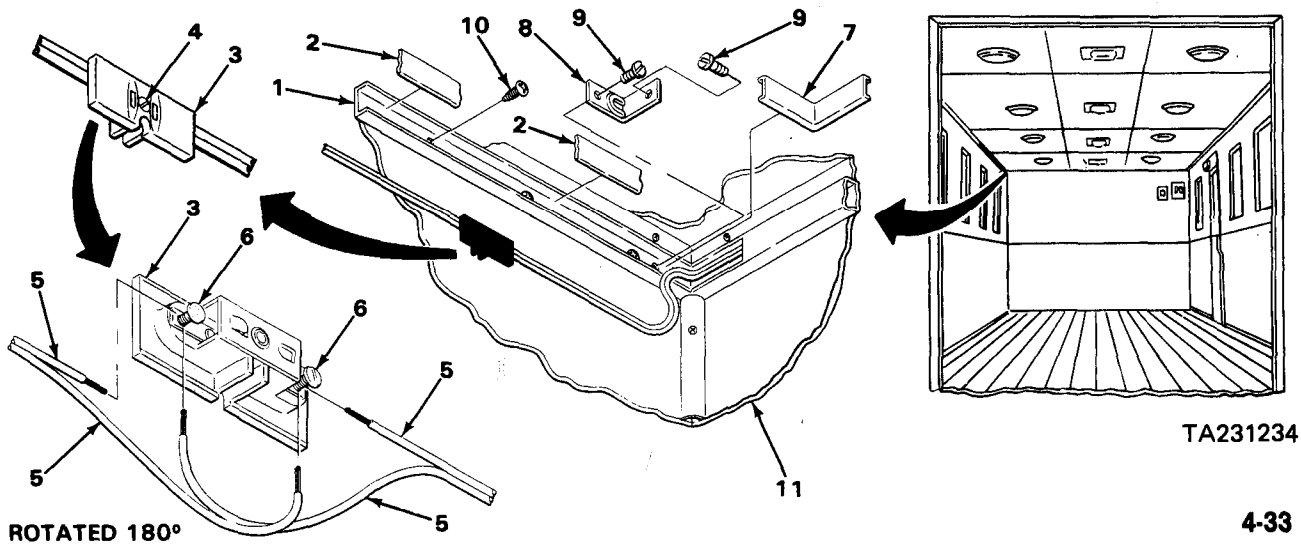

WALL RECEPTACLES AND BASE, 110-VOLT - CONTINUED

	LOCATION	ITEM	ACTION REMARKS
INSTALLATION - CONTINUED			
11.	Base (1) and van body (2)	Elbow (3)	Put in place.
12.		Three screws (4)	Screw in, and tighten using number two cross-tip screwdriver.
13.	Elbow (4) and base (1)	Two screws (5)	Screw in, and tighten using 3/16-inch flat-tip screwdriver.
14.	Base (1)	Elbow cover (6)	Using ball-peen hammer, tap in place.
15.	Wall receptacle (7)	Two contact screws (8) and two wires (9)	a. Wrap wires (9) around screws (8). b. Screw in, and tighten screws (8) using 3/16-inch flat-tip screwdriver.
16.	Base (1)	Wall receptacle (7) and two wires (9)	Put in place.
17.	Wall receptacle (7)	Screw (10)	Screw in one-quarter turn using 3/16-inch flat-tip screwdriver.
18.		Two covers (11)	Tap in place using ball-peen hammer.

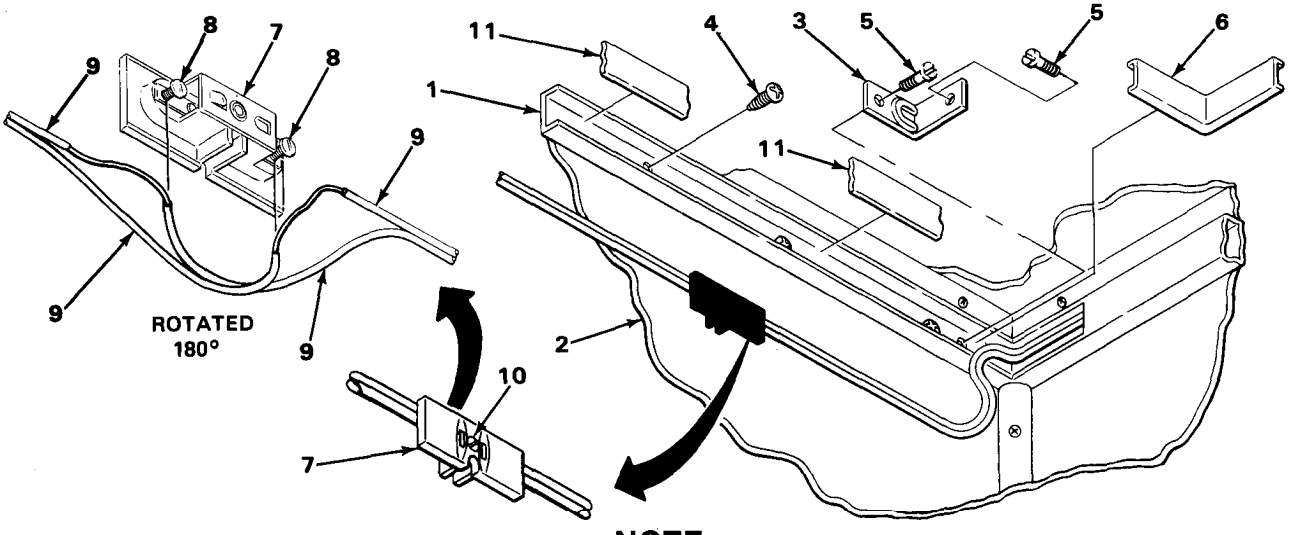

NOTE

FOLLOW-ON MAINTENANCE: Check operation of lights (page 2-22).

TASK ENDS HERE

TA231235

LIGHT SWITCHES, 24-AND 110-VOLT

This task covers:

a. Removal (page 4-35)
b. Installation (page 4-36)

INITIAL SETUP

Tools	Personnel Required
Pliers, long round-nose	One
Screwdriver, cross-tip, number two	
Screwdriver, flat-tip, 3/16-inch	

LOCATION	ITEM	ACTION	REMARKS

WARNING

Contact with live 110-volt electrical wires could result in serious injury or death. Make sure power source is disconnected before performing maintenance on the electrical system.

NOTE

Tag wires to aid in installation (page 4-4). All light switches are removed and installed the same way. This task is for one; repeat for the others.

REMOVAL

1.	Plate (1)	Two screws (2)	Using 3/16-inch flat-tip screwdriver, unscrew and take off.

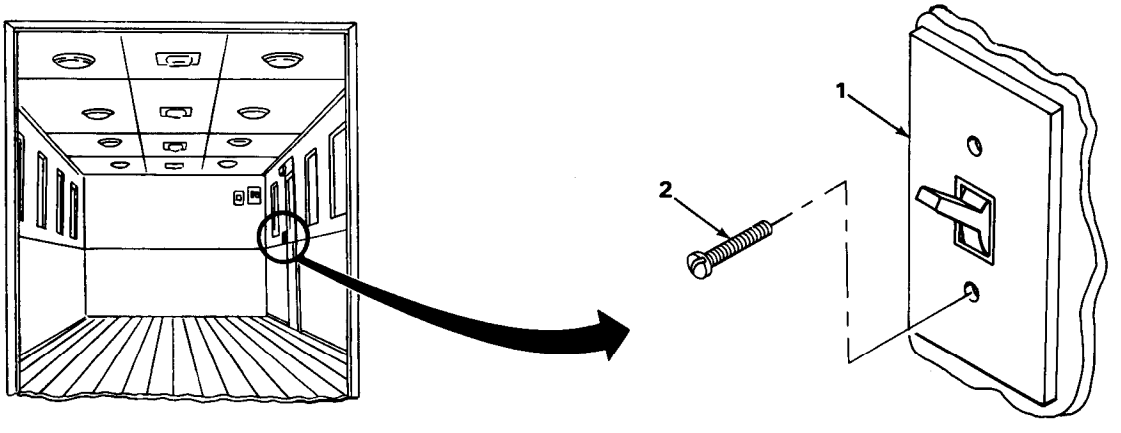

TA231236

LIGHT SWITCHES, 24-AND 11O-VOLT - CONTINUED

LOCATION	ITEM	ACTION REMARKS
REMOVAL – CONTINUED		
2. Box (1)	Plate (2)	Take off.
3. Switch (3) and box (1)	Two screws (4)	Using 3/16-inch flat-tip screwdriver, unscrew and take off.
4. Box (1)	Switch (3) and three wires (5)	Pull out from box.

NOTE

Tag wires to aid in installation (page 4-4). If circuit marker bands are missing or not readable, replace (page 4-73).

5. Switch (3)	Three screws (6)	Using 3/16-inch flat-tip screwdriver, unscrew part way.
6.	Three wires (5)	Pull out.
7. Box (1)	Switch (3)	Take out.
8. Van body (7) and box (1)	Four screws (8)	Using number two cross-tip screwdriver, unscrew and take off.
9. Van body (7)	Box (1)	Take off.
10. Box (1)	Grommet (9)	Using long round-nose pliers, pull off.
INSTALLATION		
11.	Grommet (9)	Push in place.
12. Van body (7)	Box (1)	Put in place, lining up holes.
13. Van body (7) and box (1)	Four screws (8)	Screw in, and tighten using number two cross-tip screwdriver.
14. Switch (3)	Three wires (5)	Put in place.
15.	Three screws (6)	Screw in, and tighten using 3/16-inch flat-tip screwdriver.
16. Box (1)	Switch (3) and wires (5)	Put in place.

LIGHT SWITCHES, 24-AND 110-VOLT - CONTINUED

LOCATION	ITEM	ACTION REMARKS
INSTALLATION - CONTINUED		
17. Switch (3) and box (1)	Two screws (4)	Screw in, and tighten using 3/16-inch flat-tip screwdriver.
18. Box (1)	Plate (2)	Put in place.
19. Plate (2)	Two screws (10)	Screw in, and tighten using 3/16-inch flat-tip screwdriver.

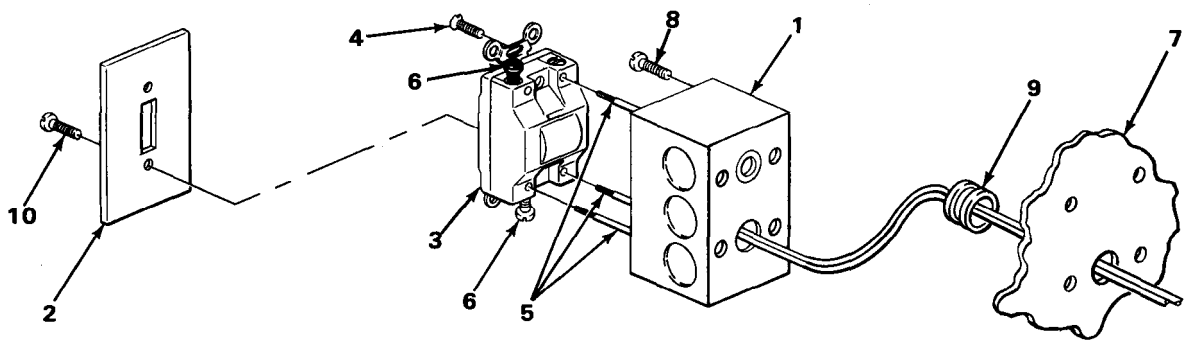

NOTE

FOLLOW-ON MAINTENANCE: Check operation of lights (page 2-22).

TASK ENDS HERE

DOOR SWITCHES, 110-VOLT

This task covers:

a. Removal (page 4-38)
b. Installation (page 4-38)

INITIAL SETUP

Tools	Personnel Required
Screwdriver, cross-tip, number two Screwdriver, flat-tip, 3/16-inch	One

TA231237

DOOR SWITCHES, 110-VOLT - CONTINUED

LOCATION	ITEM	ACTION REMARKS

WARNING

Contact with live 110-volt electrical wires could result in serious injury or death. Make sure power source is disconnected before performing maintenance on the electrical system.

NOTE

Tag wires to aid in installation (page 4-4). Both door switches are removed and installed the same way. This task is for one; repeat for the other.

REMOVAL

1.	Cover (1) and switch body (2)	Four captive screws (3)	Using 3/16-inch flat-tip screwdriver, unscrew.
2.	Switch body (2)	Cover (1) and four captive screws (3)	Take off. **Screws will stay with cover.**

NOTE

Tag wires to aid in installation (page 4-4). If circuit marker bands are missing or not readable, replace (page 4-73).

3.	Three contacts (4)	Three contact screws (5) and washers (6)	a. Move insulator flap (7) aside. b. Using 3/16-inch flat-tip screwdriver, unscrew and take off.
4.		Three wires (8)	Pull off.
5.	Switch body (2) and van body (9)	Three screws (10)	Using number two cross-tip screwdriver, unscrew and take off.
6.	Van body (9)	Switch body (2) and plate (11)	Take off, and separate.
7.	Actuator and van body (9)	Two screws (13) and lockwashers (14)	a. Mark actuator (12) location for installation. b. Using number two cross-tip screwdriver, unscrew and take off.
8.	Van body (9)	Actuator (12)	Take off.

INSTALLATION

9.		Actuator (12)	Put in place.

DOOR SWITCHES, 110-VOLT - CONTINUED

LOCATION	ITEM	ACTION **REMARKS**
INSTALLATION - CONTINUED		
10. Actuator (12) and van body (9)	Two lockwashers (14) and screws (13)	Screw in, and tighten using number two cross-tip screwdriver.
11. Van body (9)	Plate (11) and switch body (2)	Put in place.
12. Switch body (2) and van body (9)	Three screws (10)	Screw in, and tighten using number two cross-tip screwdriver.
13. Switch body (2)	Three wires (8)	Feed wires (8) through switch body hole.
14. Three contacts (4)	Three contact screws (5), three washers (6), and three wires (8)	a. Wrap ends of wires (8) around screws (5) under washers (6). b. Screw in, and tighten screws (5) using 3/16-inch flat-tip screwdriver. c. Push insulator (7) over contact screws (5).
15. Switch body (2)	Cover (1) and four captive screws (3)	Put in place.
16. Cover (1) and switch body (2)	Four captive screws (3)	Screw in, and tighten using 3/16-inch flat-tip screwdriver.

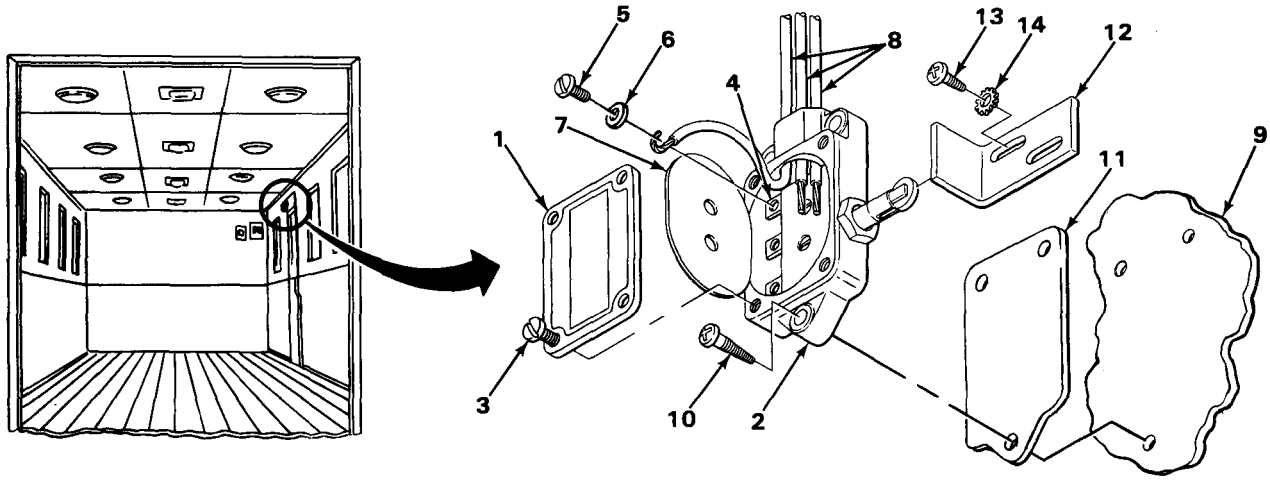

NOTE

FOLLOW-ON MAINTENANCE: Check operation of lights (page 2-22).

TASK ENDS HERE

TA231238

CIRCUIT BREAKER, 110-VOLT

This task covers:

a. Removal (page 4-40)
b. Installation (page 4-41)

INITIAL SETUP

Tools	Personnel Required
Screwdriver, flat-tip, 3/16-inch	One

LOCATION	ITEM	ACTION **REMARKS**

WARNING

Contact with live 110-volt electrical wires could result in serious injury or death. Make sure power source is disconnected before performing maintenance on the electrical system.

NOTE

All circuit breakers are removed and installed the same way. This task is for one; repeat for the others.

REMOVAL

1. Cover(1) and box (2)	Four screws (3)	Using 3/16-inch flat-tip screwdriver, unscrew and take off.
2. Box (2)	Cover (1)	Take off.

NOTE

Tag wires to aid in installation (page 4-4). If circuit marker bands are missing or not readable, replace (page 4-73).

3. Contact (4) and wire (5)	Screw (6)	Using 3/16-inch flat-tip screwdriver, unscrew part way.
4. Contact (4)	Wire (5)	Pull out.
5. Ground tab (7) and ground plate (8)	Screw (9)	Using 3/16-inch flat-tip screwdriver, unscrew and take off.
6. Plate (10)	Circuit breaker (11)	a. Pull circuit breaker (11) out as far as it will go.

CIRCUIT BREAKER, 110-VOLT - CONTINUED

LOCATION	ITEM	ACTION **REMARKS**
INSTALLATION		
6. Continued		b. Pull circuit breaker (11) away from plate (10) and take out.
7.	Circuit breaker (11)	a. Lineup prongs on circuit breaker (11) with slots in plate (10). b. Put circuit breaker prongs in slots on plate (10). c. Push in until seated.
8. Ground tab (7) and ground plate (8)	Screw (9)	Screw in, and tighten using 3/16-inch flat-tip screwdriver.
9. Contact (4)	Wire (5)	Put in place.
10. Contact (4) and wire (5)	Screw (6)	Screw in, and tighten using 3/16-inch flat-tip screwdriver.
11. Box (2)	Cover (1)	Put in place.
12. Cover (1) and box (2)	Four screws (3)	Screw in, and tighten using 3/16-inch flat-tip screwdriver.

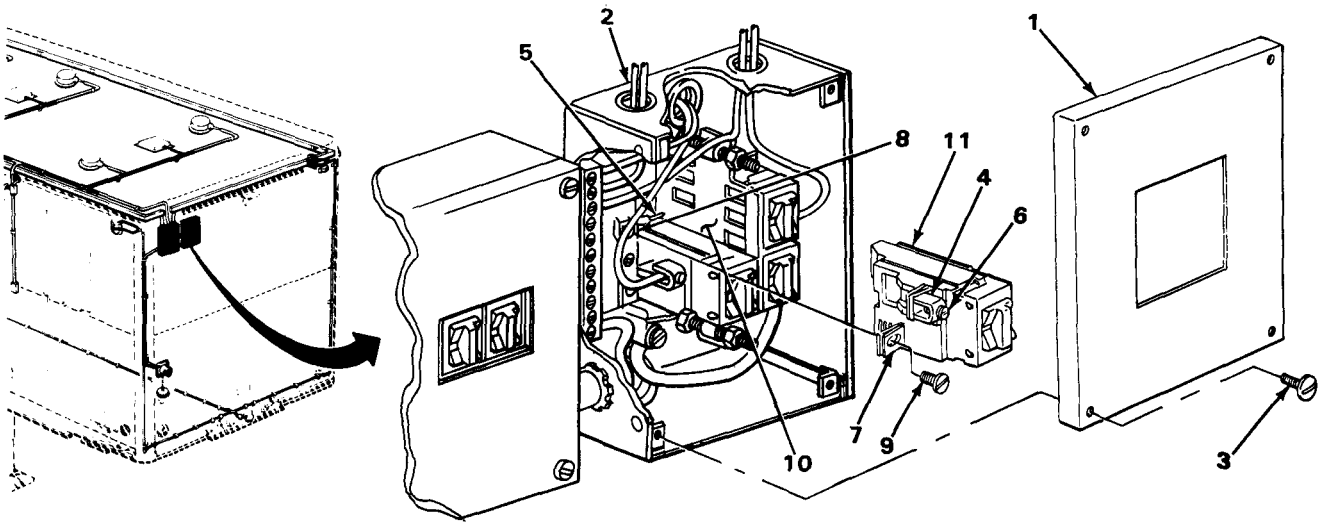

NOTE

FOLLOW-ON MAINTENANCE: Check operation of circuit breaker (page 2-8).

TASK ENDS HERE

TA231239

JUNCTION BOXES, 110-VOLT

This task covers:

a. Removal (page 4-42)
b. Installation (page 4-45)

INITIAL SETUP

Tools

Drill, electric, portable, l/2-inch
Drill, twist, 3/16-inch
Hammer, hand, ball-peen, 2-lb
Pliers, long round-nose
Punch, drive pin, 3/16-inch
Screwdriver, cross-tip, number two
Screwdriver, flat-tip, 3/16-inch

Personnel Required

One

Equipment Condition

Circuit breakers removed (page 4-40),

LOCATION	ITEM	ACTION **REMARKS**

WARNING

Contact with live 110-volt electrical wires could result in serious injury or death. Make sure power source is disconnected before performing maintenance on the electrical system.

NOTE

Both junction boxes are removed and installed the same way. This task is for one; repeat for the other.

Tag wires to aid in installation (page 4-4). If circuit marker bands are missing or not readable, replace (page 4-73).

REMOVAL

1. Bus bar (1) and two ground contacts (2)	Six screws (3)	Using 3/16-inch flat-tip screwdriver, unscrew part way.
2.	Seven wire ends (4)	Pull out.
3. Box (5) and nipple pipe (6)	Bushing (7) and nut (8)	a. Using 3/16-inch drive pin punch and ball-peen hammer, tap bottom of nut (8) toward van body (9) until loose. b. Unscrew nut (8), and take off.

JUNCTION BOXES, 110-VOLT - CONTINUED

LOCATION	ITEM	ACTION **REMARKS**
REMOVAL - CONTINUED		
4. Coupling (10) and box (5)	Bushing (11)	a. Using 3/16-inch drive pin punch and ball-peen hammer, tap left side of bushing (11) toward van body (9) until loose. b. Unscrew bushing (11), and take off. c. Repeat steps 4a and b for other bushing (11).
5. Box (5)	Coupling (10)	a. Take off. b. Repeat step 5a for other coupling.
6. Box (5) and van body (9)	Four screws (12)	Using number two cross-tip screwdriver, unscrew and take off.
7. Van body (9) and nipple pipe (6)	Box (5)	Take off.
8. Box(5) and van body (9)	Two grommets (13)	Using long round-nose pliers, take off.

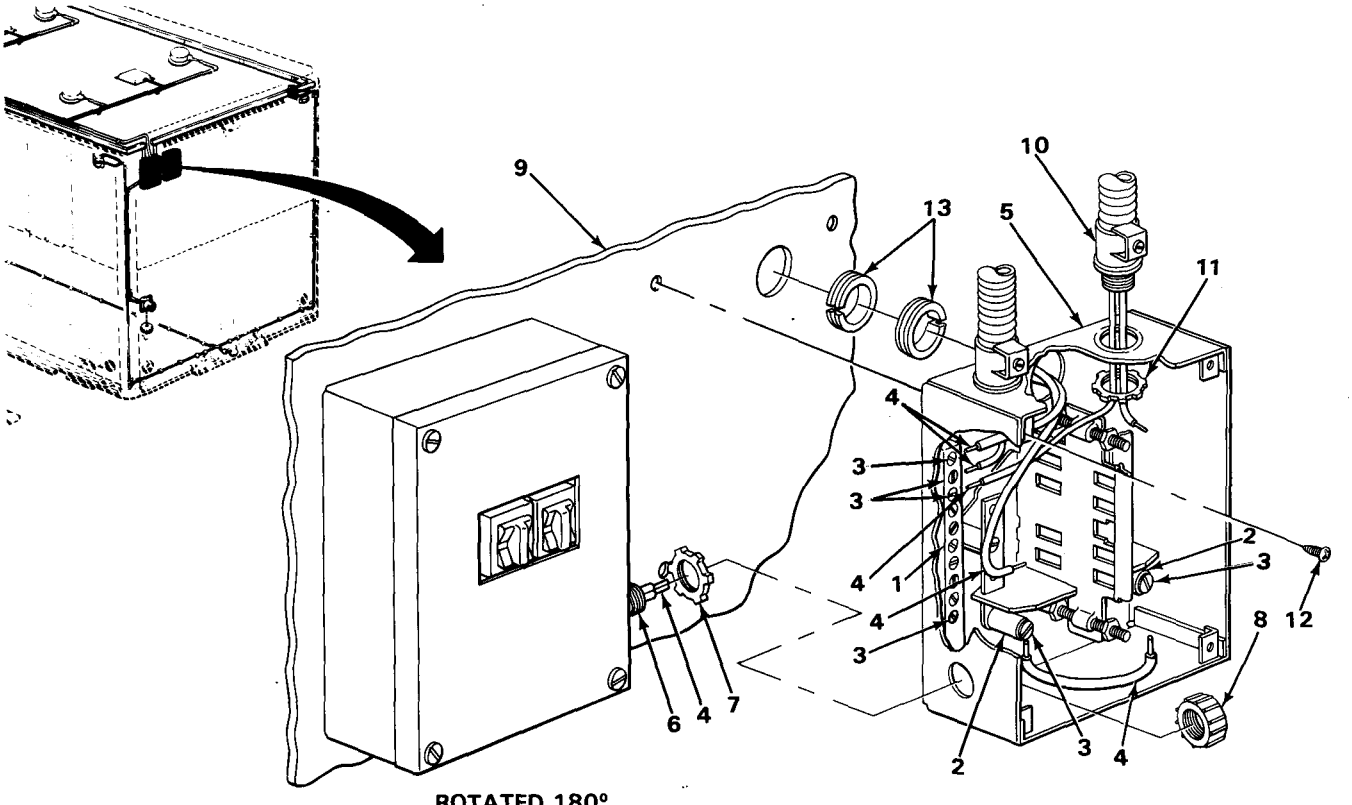

TA231240

JUNCTION BOXES, 110-VOLT - CONTINUED

LOCATION	ITEM	ACTION **REMARKS**
REMOVAL - CONTINUED		
9. Nipple pipe(1)	Bushing (2)	Unscrew, and take off.
10. Cover (3) and box (4)	Four screws (5)	Using 3/16-inch flat-tip screwdriver, unscrew and take off.
11. Box (4)	Cover (3)	Take off.
12. Box (4) and nipple pipe (1)	Bushing (6) and nut (7)	a. Using 3/16-inch drive pin punch and ball-peen hammer, tap top of bushing (6) toward van body (8) until loose. b. Unscrew nipple pipe (1) from nut (7).
13. Nipple pipe (1)	Bushing (6)	Unscrew, and take off.
14. Fitting (9)	Cover (10) and screw (11)	a. Using 3/16-inch flat-tip screwdriver, unscrew screw (11) and take off. b. Take off cover (10).
15. Elbow (12)	Two covers (13)	Using 3/16-inch flat-tip screwdriver, pry off.
16. Coupling (14) and fitting (9)	Nut (15)	a. Using 3/16-inch drive pin punch and ball-peen hammer, tap right side of nut (15) toward van body (8) until loose. b. Unscrew all the way.
17. Fitting (9)	Conduit assembly (16)	Take off.
18. Fitting (9) and nut (15)	Two wires (17)	Pull out from fitting (9) and nut (15).
19. Fitting (9)	Nut (15)	Take off.
20. Fitting (9) and elbow (12)	Screw (18)	Using 3/16-inch flat-tip screwdriver, unscrew and take off.
21. Fitting (9), coupling (19), and van body (8)	Two screws (20)	Using number two cross-tip screwdriver, unscrew and take off.
22. Van body (8)	Fitting (9), elbow (12), and coupling (19)	a. Take off, and separate. b. Repeat steps 14 thru 22a for the other side.

JUNCTION BOXES, 110-VOLT - CONTINUED

LOCATION	ITEM	ACTION **REMARKS**
INSTALLATION		
23.	Fitting (9), elbow (12), and coupling (19)	a. Measure position of screw holes on van body (8), and mark fitting (9) and elbow (12) accordingly. b. Using guide marks, portable drill, and 3/16-inch twist drill, drill holes in fitting (9) and elbow (12). c. Put in place.
24. Fitting (9), elbow (12), and van body (8)	Two screws (20)	Screw in, and tighten using number two cross-tip screwdriver.
25. Fitting (9) and elbow (12)	Screw (18)	Screw in, and tighten using 3/16-inch flat-tip screwdriver.
26. Fitting (9)	Nut (15)	Put in place.
27. Fitting (9) and nut (15)	Two wires (17)	Feed through.

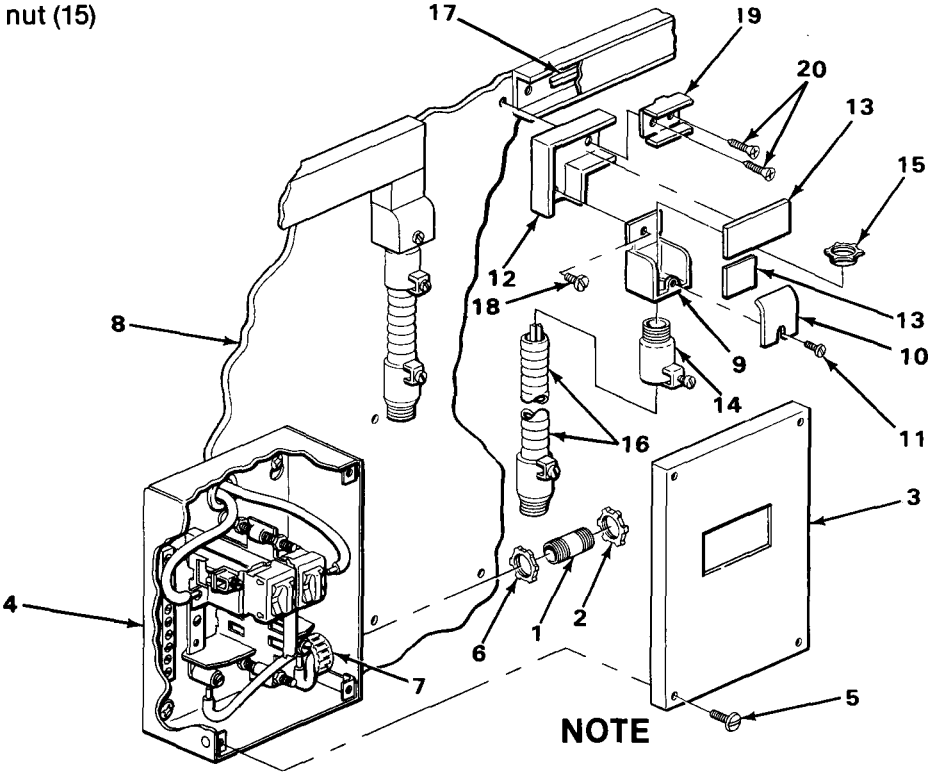

NOTE

Conduit assembly is a manufactured item from bulk materials. For new assembly, see appendix G.

TA23124

JUNCTION BOXES, 110-VOLT - CONTINUED

LOCATION	ITEM	ACTION **REMARKS**
INSTALLATION - CONTINUED		
28. Fitting (1)	Conduit assembly (2)	a. Feed wires through conduit assembly. b. Put in place.
29. Coupling (3) and fitting (1)	Nut (4)	a. Screw in. b. Tap left side of nut (4) toward van body (5) using 3/16-inch drive pin punch and ball-peen hammer.
30. Elbow (6)	Two covers (7)	Using ball-peen hammer, tap in place.
31. Fitting (1)	Cover (8) and screw (9)	a. Put cover (8) in place. b. Screw in screw (9), and tighten using 3/16-inch flat-tip screwdriver. c. Repeat steps 23 thru 31 b for other side.
32. Nipple pipe (10)	Bushing (11)	Screw in all the way.
33. Box (12), nut (13), and two wires (14)	Nipple pipe (10) with bushing (11)	a. Slip over two wires (14). b. Screw pipe (10) into nut (13) until tight.
34. Nipple pipe (10) and box (12)	Bushing(n)	a. Screw in toward box (12). b. Using 3/16-inch drive pin punch and ball-peen hammer. tap top of bushing (11) toward van body (5) until tight.
35. Box (12)	Cover (15)	Put in place.
36. Cover (15) and box (12)	Four screws (16)	Screw in, and tighten using 3/16-inch flat-tip screwdriver.
37. Nipple pipe (10)	Bushing (17)	Screw in all the way.
36. Box (18)	Grommet (19)	Push in place.
39. Van body (5)	Grommet (20)	Push in place.
40. Van body (5) and nipple pipe (10)	Box (18)	While feeding wires through hole, put in place.
41. Box (18) and van body (5)	Four screws (21)	Screw in, and tighten using number two cross-tip screwdriver.
42. Box (18)	Two wires (22)	Feed through hole in top of box (18).

JUNCTION BOXES, 110-VOLT - CONTINUED

LOCATION	ITEM	ACTION **REMARKS**
INSTALLATION - CONTINUED		
43.	Coupling (23)	a. Put in place. b. Repeat step 43a for other coupling.
44. Coupling (23), two wires (22), and box (18)	Bushing (24)	a. Slip over wires (22), and screw in using 3/16-inch flat-tip screwdriver. b. Screw into coupling (23). c. Using ball-peen hammer and 3/16-inch drive pin punch, tap right side of bushing (24) toward van (5) until tight.
45. Box (18), nipple pipe (10), and wires (14)	Bushing (17) and nut (25)	a. Slip nut (25) over wires (14). b. Screw nut (25) in pipe (10). c. Screw bushing (17) toward box (18), and using hammer and 3/16-inch drive pin punch, tap until tight.

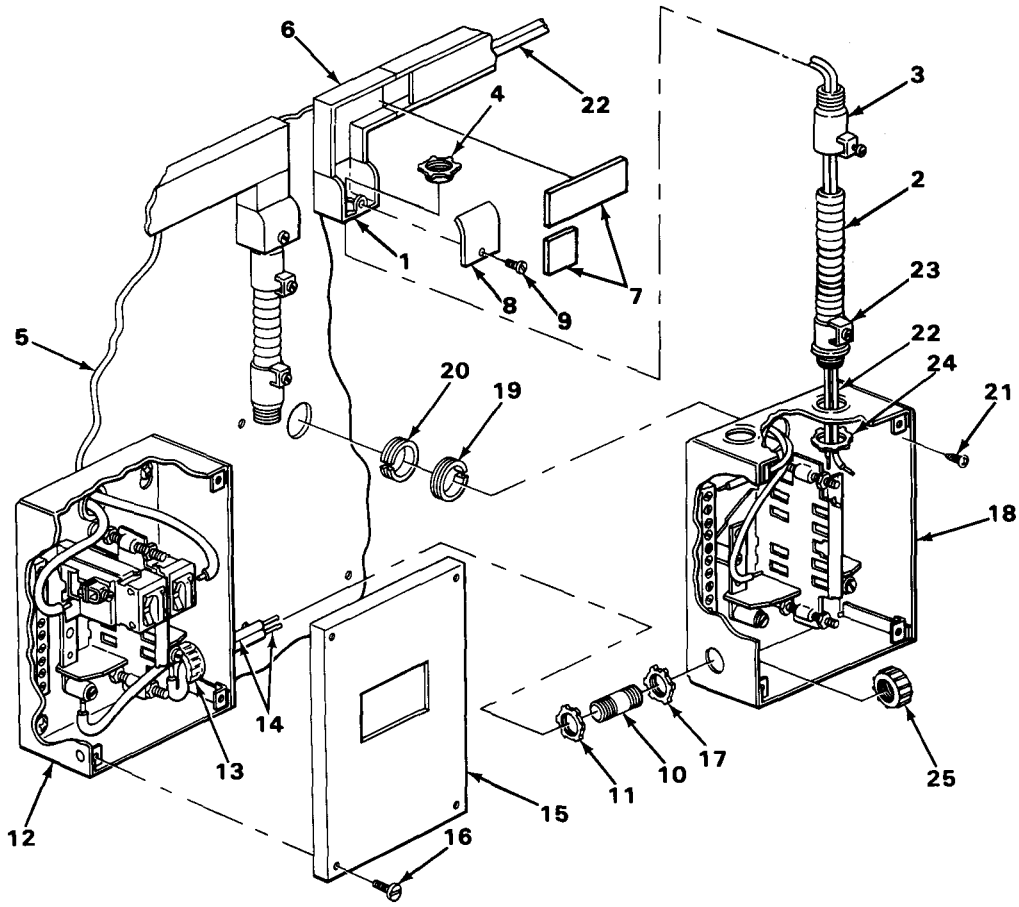

TA231242

JUNCTION BOXES, 110-VOLT - CONTINUED

LOCATION	ITEM	ACTION **REMARKS**
INSTALLATION - CONTINUED		
46. Bus bar (1) and two ground contacts (2)	Seven wire ends (3)	Put in place.
47.	Six screws (4)	Screw in, and tighten using 3/16-inch flat-tip screwdriver.

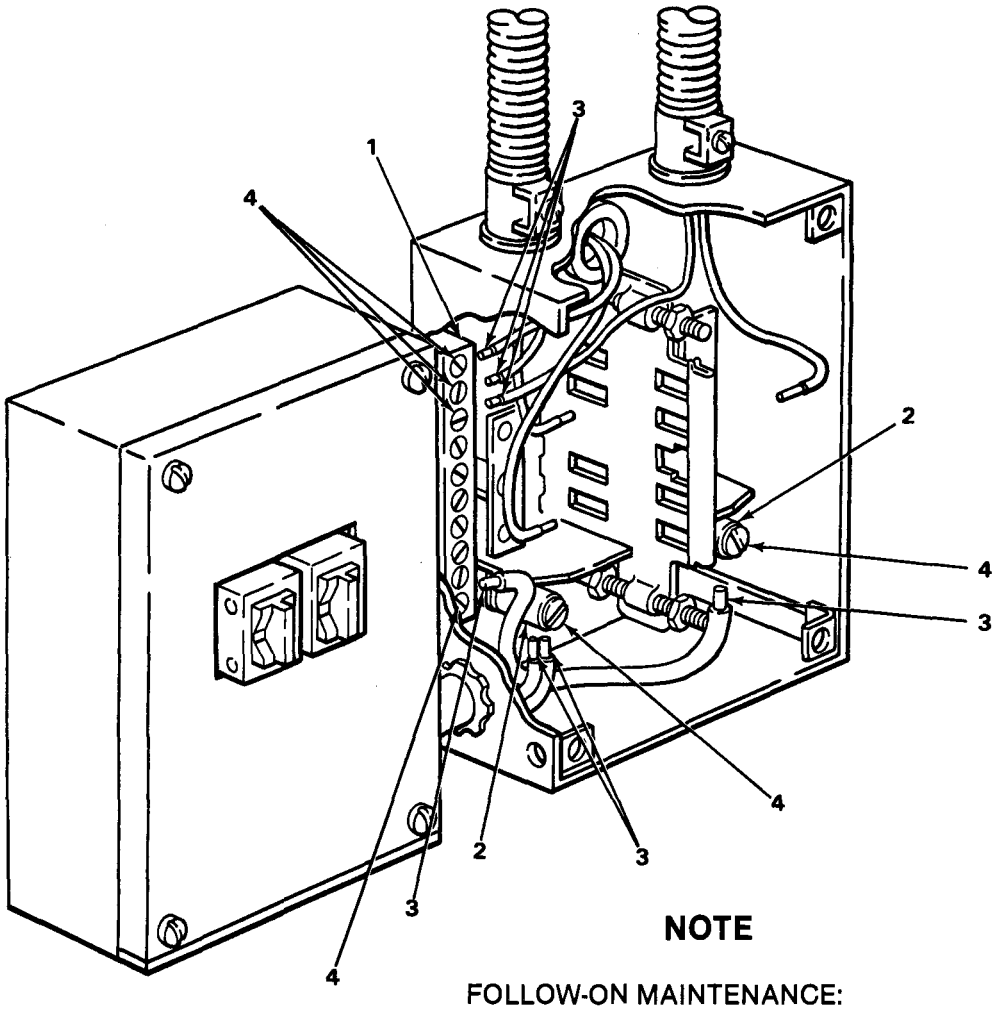

NOTE

FOLLOW-ON MAINTENANCE:

1. Install circuit breakers (page 4-40).
2. Check operation of lights (page 2-22).
3. Check operation of wall receptacles (page 1-12).

TASK ENDS HERE

TA231243

COMPOSITE LIGHT ASSEMBLY

This task covers:

a. Removal (page 4-49)
b. Lamps, Lens, and Door Assembly Replacement (page 4-50)
c. Installation (page 4-51)

INITIAL SETUP

Tools	Personnel Required
Handle, ratchet, 3/8-inch drive Screwdriver, flat-tip, 3/16-inch Socket, 3/8-inch drive, 9/16-inch	One

LOCATION	ITEM	ACTION **REMARKS**

NOTE

Both composite light assemblies are removed and installed, and lamp, lens, and door assemblies are replaced in the same way. These procedures are for one. Repeat for the other.

REMOVAL

NOTE

Tag wires to aid in installation (page 4-4). If wire connectors are to be repaired or replaced, go to wire connector procedure (page 4-71).

Removal is not necessary for lamp, lens, or door assembly replacement. If replacing lamp, lens, or door assembly only, go to step 4. If circuit marker bands are missing or not readable, replace (page 4-73).

COMPOSITE LIGHT ASSEMBLY - CONTINUED

LOCATION	ITEM	ACTION **REMARKS**
REMOVAL - CONTINUED		
	CAUTION	
	Do not pull on wires, only pull connectors apart. Pulling on wires could damage them.	
1. Frame (1)	Eight connectors (2)	Pull apart.
2. Frame (1) and composite light assembly (3)	Two screws (4) and lockwashers (5)	Using 9/16-inch socket and ratchet handle with 3/8-inch drive, unscrew and take out.
3. Frame (1)	Composite light assembly (3)	Take off.
LAMP, LENS, AND DOOR ASSEMBLY REPLACEMENT		
4. Composite light assembly (3)	Six captive screws (6)	Using 3/16-inch flat-tip screwdriver, unscrew and take out. **Door and lens assembly (7) will come off with screws (6).**
	NOTE	
	Do not remove preformed packing unless damaged, deteriorated, and replacement is necessary.	
5.	Preformed packing (8)	Using 3/16-inch flat-tip screwdriver, pry out of groove.
6. Composite light body (9)	Four lamps (10)	Push in, turn one-quarter turn counterclockwise, and take out.
	NOTE	
	Top lamp in light assembly is taillight, second lamp is stop-turn lamp, third down is blackout taillight, and bottom lamp is blackout stoplight.	
7.	Four lamps (10)	Place in proper socket (11), push in, and turn one-quarter turn clockwise.
8.	New preformed packing (8)	If removed, place in groove.
9. Composite light body (9)	Door and lens assembly (7)	Place in position.

COMPOSITE LIGHT ASSEMBLY - CONTINUED

LOCATION	ITEM	ACTION **REMARKS**
LAMP, LENS, AND DOOR ASSEMBLY REPLACEMENT - CONTINUED		
10.	Six captive screws (6)	Using 3/16-inch flat-tip screwdriver, screw in. **If repairing lamp, lens, or door assembly only, go to FOLLOW - ON MAINTENANCE.**
INSTALLATION		
11. Frame (1)	Composite light assembly (3)	Place in position, and aline with screw holes.
12. Frame (1) and composite light assembly (3)	Two screws (4) and lockwashers (5)	Put in, and tighten using 9/16-inch socket and ratchet handle with 3/8-inch drive.
13. Wire harness (12) and composite light assembly (3)	Eight connectors (2)	Push together.

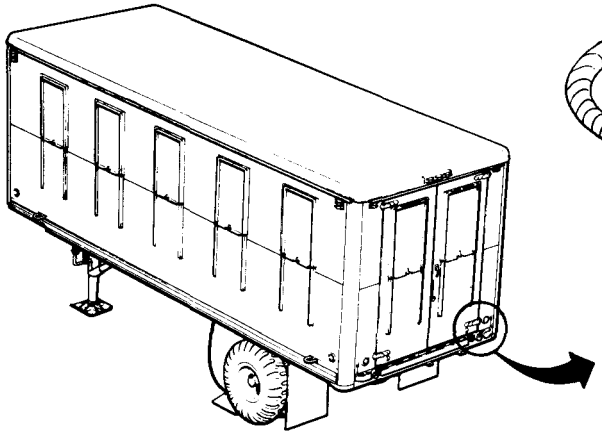

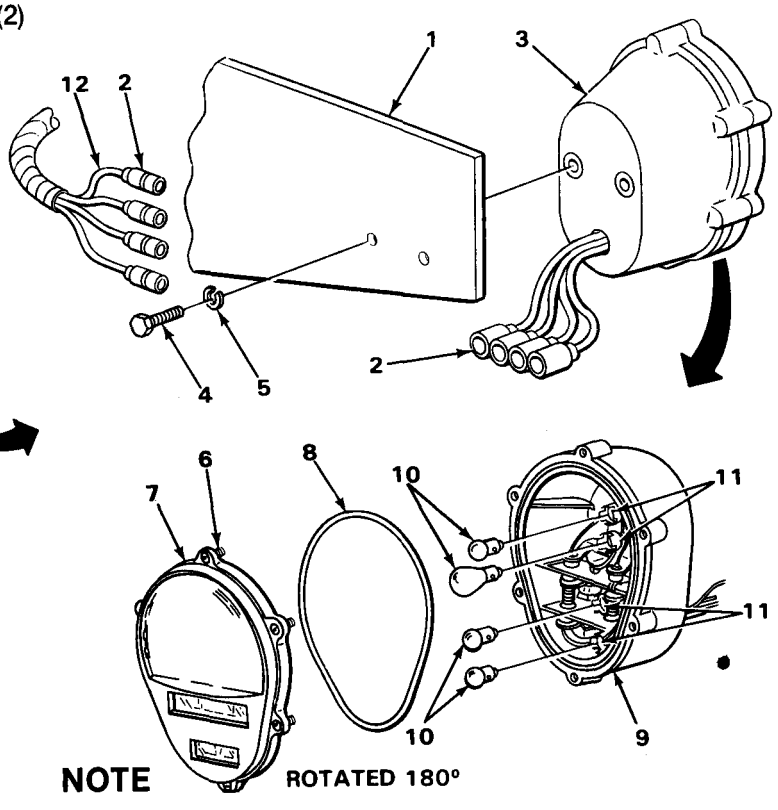

FOLLOW-ON MAINTENANCE: Check operation of lights (page 2-22).

TASK ENDS HERE

TA231244

SERVICE TAILLIGHT ASSEMBLIES

This task covers:

a. Removal (page 4-52)
b. Lamp, Lens, and Door Assembly Replacement (page 4-53)
c. Installation (page 4-54)

INITIAL SETUP

Tools	Personnel Required
Handle, ratchet, 3/8-inch drive Screwdriver, flat-tip, 3/16-inch Socket, 3/8-inch drive, 9/16-inch	One

LOCATION	ITEM	ACTION **REMARKS**

NOTE

Both service taillight assemblies are removed and installed, and lamp, lens and door assemblies are replaced in the same way. These procedures are for one; repeat for the other.

Tag wires to aid in installation page (4-4). If wire connectors are to be repaired or replaced, go to wire connector procedure (page 4-71).

Removal is not necessary for lamp, lens, or door assembly replacement. If repairing lamp, lens, or door assembly, go to step 4. If circuit marker bands are missing or not readable, replace (page 4-73).

REMOVAL

CAUTION

Do not pull on wires, only pull connectors apart. Pulling on wires could damage them.

1. Frame (1)	Six connectors (2)	Pull apart.
2. Frame (1) and service taillight assembly (3)	Two screws (4) and lockwashers (5)	Using 9/16-inch socket and ratchet handle with 3/8-inch drive, unscrew and take out.
3. Frame (1)	Service taillight assembly (3)	Take off.

SERVICE TAILLIGHT ASSEMBLIES – CONTINUED

LOCATION	ITEM	ACTION **REMARKS**
LAMP, LENS, AND DOOR ASSEMBLY REPLACEMENT		
4. Service taillight body (6)	Six captive screws (7)	Using 3/16-inch flat-tip screwdriver, unscrew. **Door and lens assembly (8) will come off with screws (7).**
	NOTE Do not remove preformed packing unless damaged, deteriorated, and replacement is necessary,	
5.	Preformed packing (9)	Using 3/16-inch flat-tip screwdriver, pry out.
6.	Three lamps (10)	Push in, turn one-quarter turn counterclockwise, and take out.
7.	Three lamps (10)	Place in proper socket (11), push in, and turn one-quarter turn clockwise.
8.	New preformed packing (9)	If removed, place in groove.

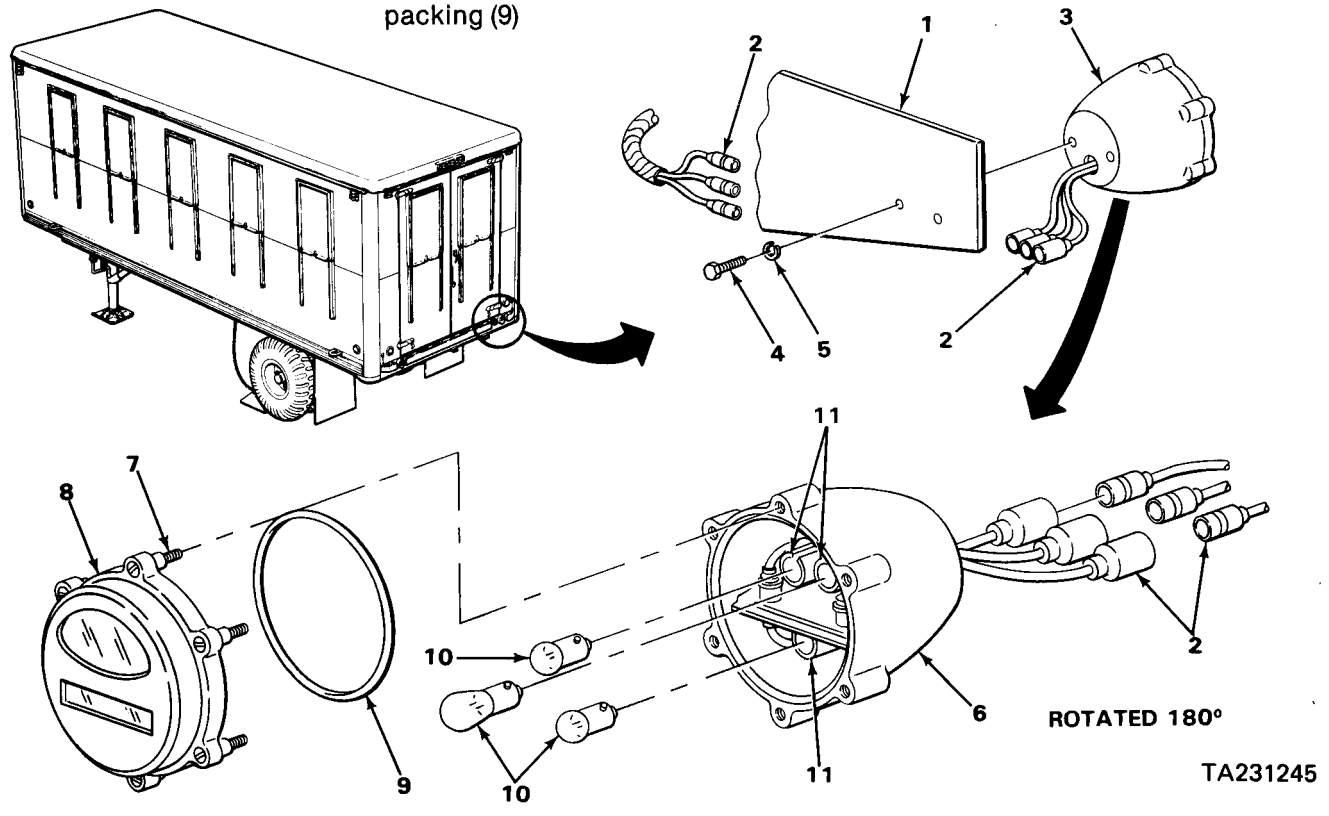

SERVICE TAILLIGHT ASSEMBLIES - CONTINUED

LOCATION	ITEM	ACTION **REMARKS**
LAMP, LENS, AND DOOR ASSEMBLY REPLACEMENT - CONTINUED		
9. Service taillight body (1)	Door and lens assembly (2)	Place in position on service taillight body (1).
10.	Six captive screws (3)	Using 3/16-inch flat-tip screwdriver, screw in. **If only repairing lamp, lens, or door assembly, go to FOLLOW - ON MAINTENANCE.**
INSTALLATION		
11. Frame (4)	Service taillight assembly (5)	Place in position, and aline with screw holes.
12. Frame (4) and service taillight assembly (5)	Two screws (6) and lockwashers (7)	Put in, and tighten using 9/16-inch socket and ratchet handle with 3/8-inch drive.
13. Wire harness (8) service taillight assembly (5)	Six connectors (9)	Push together.

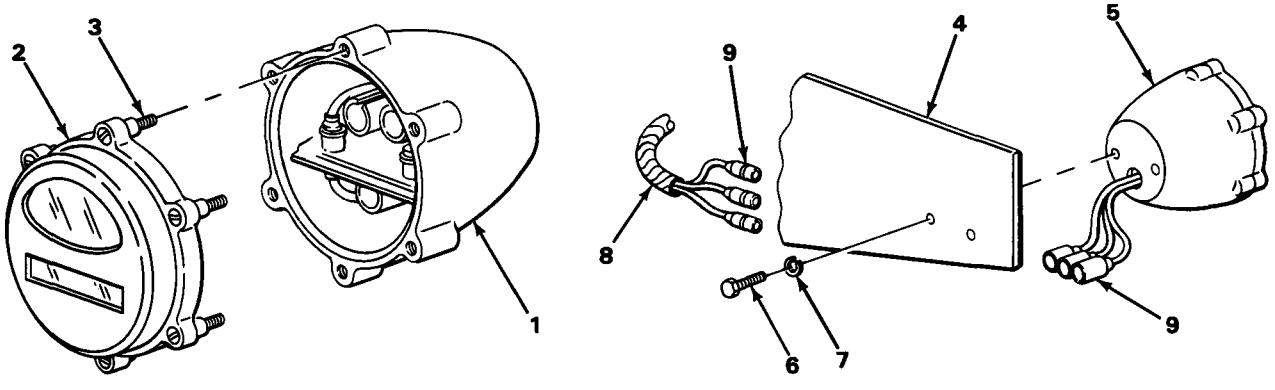

NOTE

FOLLOW-ON MAINTENANCE: Check operation of lights (page 2-22).

TASK ENDS HERE

TA231246

BLACKOUT STOPLIGHT ASSEMBLY

This task covers:

a. Removal (page 4-55)
b. Lamps, Lens, and Door assembly Replacement (page 4-56)
c. Installation (page 4-56)

INITIAL SETUP

Tools	Personnel Required
Handle, ratchet, 3/8-inch drive Screwdriver, flat-tip, 3/16-inch Socket, 3/8-inch drive, 1/2-inch	One

LOCATION	ITEM	ACTION	REMARKS

REMOVAL

NOTE

If wire connectors are to be repaired or replaced, go to wire connector procedure (page 4-71).

Removal is not necessary for lamp, lens, or door assembly. For replacement, go to step 4.

If circuit marker bands are missing or not readable, replace (page 4-73).

CAUTION

Do not pull on wires, only pull connectors apart. Pulling on wires could damage them.

1.	Blackout stoplight assembly (1)	End connector (2)	Pull out.

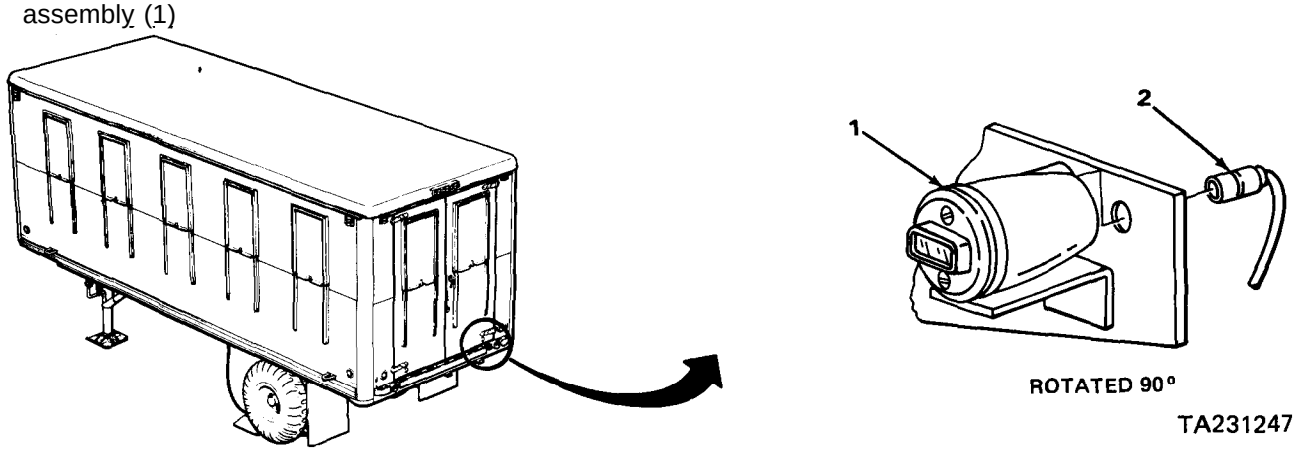

BLACKOUT STOPLIGHT ASSEMBLY - CONTINUED

LOCATION	ITEM	ACTION **REMARKS**
REMOVAL - CONTINUED		
2. Bracket (1)and blackout stoplight assembly (2)	Screw (3) and lockwasher (4)	Using 1/2-inch socket and ratchet handle with 3/8-inch drive, unscrew and take out.
3. Bracket (1)	Blackout stoplight assembly (2)	Lift up, and take off.
LAMP, LENS, AND DOOR ASSEMBLY REPLACEMENT		
4. Blackout stoplight body (5)	Two screws (6)	a. Using 3/16-inch flat-tip screwdriver, unscrew and take out. b. Using 3/16-inch flat-tip screwdriver, pry off door and lens asembly (6).
5. Door and lens assembly (7)	Gasket (8)	Using 3/16-inch flat-tip screwdriver, pry out.
6. Blackout stoplight body (5)	Lamp (9)	Push in, turn one-quarter turn counterclockwise, and take out.
7.	Lamp (9)	Place in socket (10), push in, and turn one-quarter turn clockwise.
8. Door and lens assembly (7)	Gasket (8)	Place in groove.
9. Blackout stoplight body (5)	Door and lens assembly (7)	Place in position on blackout stoplight body (2).
10.	Two screws (6)	Screw in and tighten, using 3/16-inch flat-tip screw driver. **If only repairing lamp, lens or door assembly, go to FOLLOW-ON MAINTENANCE.**
INSTALLATION		
11. Bracket (1)	Blackout stoplight assembly (2)	Line up bracket stud (11) with small hole on blackout stoplight body, and place onto bracket.
12. Wire harness lead (12)	End connector (13)	Feed through frame hole (14), and push into blackout light assembly body (2).

BLACKOUT STOPLIGHT ASSEMBLY - CONTINUED

LOCATION	ITEM	ACTION REMARKS
INSTALLATION - CONTINUED		
13. Bracket (1) and blackout stoplight assembly (2)	Screw (3) and lockwasher (4)	a. Aline blackout stoplight body (2) with bolt hole. b. Screw in, and tighten using 1/2-inch socket and ratchet handle with 3/8-inch drive.

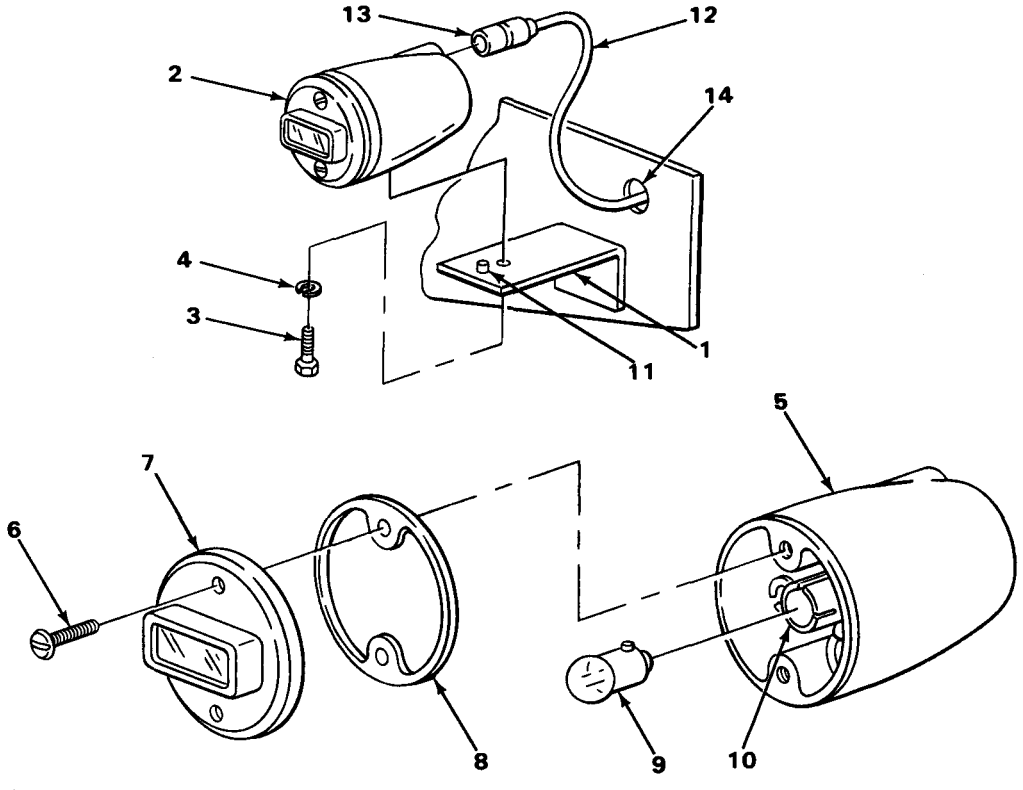

NOTE

FOLLOW-ON MAINTENANCE: Check operation of lights (page 2-22).

TASK ENDS HERE

TA231248

CLEARANCE LIGHT ASSEMBLY

This task covers:

a. Removal (page 4-58)
b. Installation (page 4-60)

INITIAL SETUP

Tools

Knife, putty
Ladder, extension
Screwdriver, cross-tip, number two
Screwdriver, flat-tip, 3/16-inch

Materials/Parts

Cloth, crocus (item 5, appendix E)

Personnel Required

One

LOCATION	ITEM	ACTION **REMARKS**

NOTE

All clearance and blackout lights are removed and installed the same way. This task is for one; repeat for the others.

If wire connectors are to be replaced or repaired, go to wire connector procedure (page 4-71).

REMOVAL

1. Lens housing (1) and light body (2)	Two screws (3)	Using 3/16-inch flat-tip screwdriver, unscrew and take out.
2. Light body (2)	Lens housing (1)	Take off.
3. Lens housing (1)	Speed nut (4)	Using 3/16-inch flat-tip screwdriver, pry off.
4.	Lens (5)	Pull out.
5. Light body (2)	Lamp (6)	a. Push in, turn one-quarter turn counterclockwise, and take out. b. Inspect for broken filament and corrosion. **If corroded, clean with crocus cloth.**
6.	Socket (7)	Check for corrosion. **If corroded, clean with crocus cloth.**

CLEARANCE LIGHT ASSEMBLY - CONTINUED

LOCATION	ITEM	ACTION **REMARKS**
REMOVAL - CONTINUED		
	NOTE If circuit marker bands are missing or not readable, replace (page 4-73).	
7. Light body (2) and outside wall (8)	Four screws (9) and lockwashers (10)	Using number two cross-tip screwdriver, unscrew and take out.
8. Outside wall (8)	Light body (2), gasket (11), and connector halves (12)	Pull light body out from wall (8) until connector halves (12) are outside of wall (8).
9. Wire harness (13) and light body (2)	Connector halves (12)	Take apart. **Make sure connector half to wire harness stays outside of wall (8).**
10. Light body (2)	Gasket (11)	Using putty knife, scrape off.

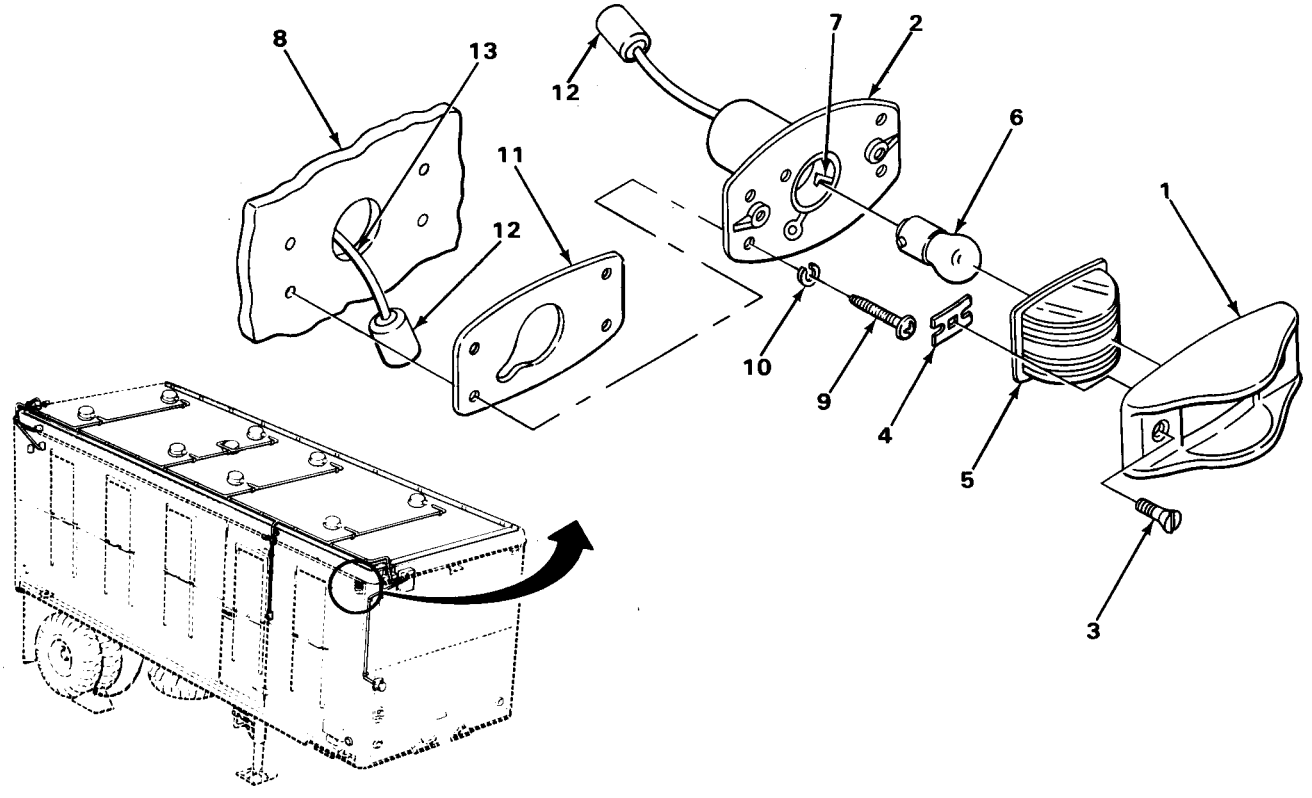

TA231249

CLEARANCE LIGHT ASSEMBLY - CONTINUED

	LOCATION	ITEM	ACTION **REMARKS**
INSTALLATION			
11.	Light body (1)	Gasket (2)	Put in place.
12.	Wire harness (3) and light body (1)	Connector halves (4)	Put together.
13.	Outside wall (5)	Light body (1) with gasket (2) and connector halves (4)	Put in place.
14.	Light body (1) and outside wall (5)	Four screws (6) and lockwashers (7)	Screw in, and tighten using number two cross-tip screwdriver.
15.	Light body (1)	Lamp (8)	Push in, and turn one-quarter turn clockwise.
16.	Lens housing (9)	Lens (10)	Put in place.
17.		Speed nuts (11)	Put in place.
18.	Light body (1)	Lens housing (9)	Put in place.
19.	Lens housing (9) and light body (1)	Two screws (12)	Screw in, and tighten using 3/16-inch flat-tip screwdriver.

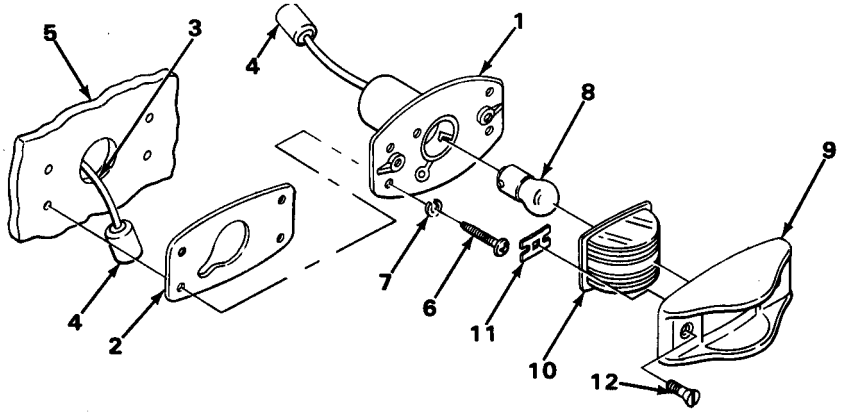

TA231250

CLEARANCE LIGHT ASSEMBLY - CONTINUED

INSTALLATION - CONTINUED

NOTE

FOLLOW-ON MAINTENANCE: Check operation of lights (page 2-22).

TASK ENDS HERE

INSIDE DOMELIGHT, 24-VOLT

This task covers:

a. Removal (page 4-62)
b. Repair (page 4-62)
c. Installation (page 4-66)

INITIAL SETUP

Tools	Personnel Required
Pliers, long round-nose Screwdriver, cross-tip, number two Screwdriver, flat-tip, 3/16-inch Wrench, box-end, 7/16-inch Wrench, box-end, 7/8-inch	One

LOCATION	ITEM	ACTION	**REMARKS**

NOTE

All 24-volt inside domelights are removed, repaired, and installed the same way. This task is for one; repeat for the others.

If circuit marker bands are missing or not readable, replace (page 4-73).

INSIDE DOMELIGHT, 24-VOLT - CONTINUED

LOCATION	ITEM	ACTION **REMARKS**
REMOVAL		
1. Van ceiling (1) and plate (2)	Seven screws (3) and lockwashers (4)	Using number two cross-tip screwdriver, unscrew and take off.
2. Van ceiling (1)	Light assembly (5) and plate (2)	Take off.
3. Wire harness lead (6) and connector (7)	Connector half (8)	Pull apart.
4. Light assembly (5) and plate (2)	Four screws (9), lockwashers (10), and nuts (11)	Using 7/16-inch box-end wrench and number two cross-tip screwdriver, unscrew and take off.
5. Plate (2)	Light assembly (5)	Take off.

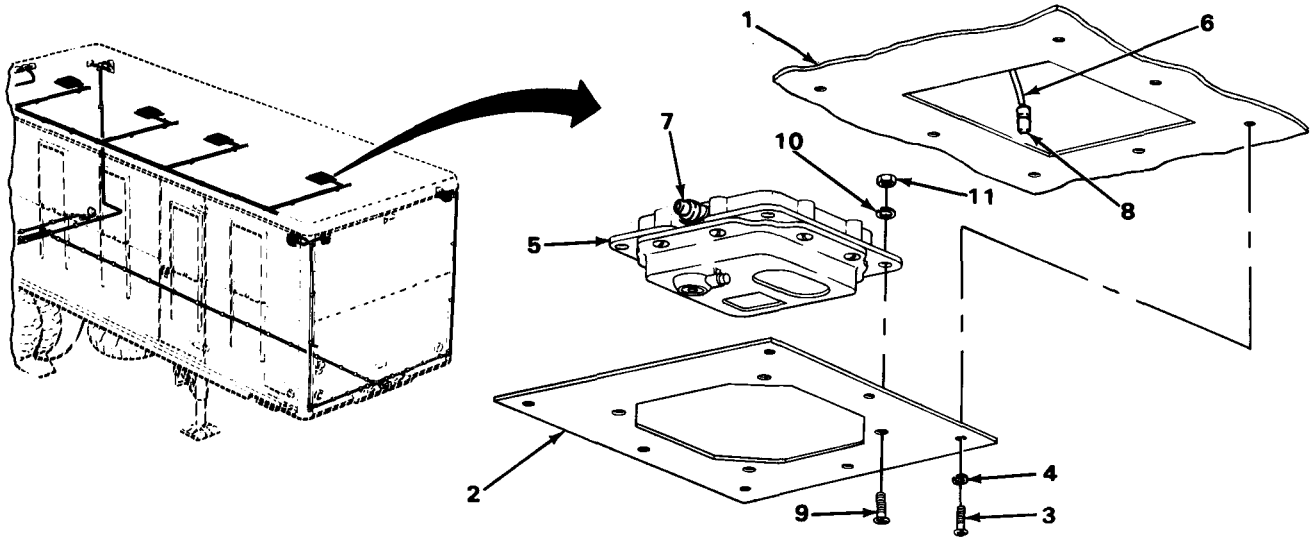

REPAIR

6. Door assembly (12)	Eight captive screws with washers (13)	Using 3/16-inch flat-tip screwdriver, all unscrew screws (13) until they are loose. Screws will remain in door assembly.

TA231251

INSIDE DOMELIGHT, 24-VOLT - CONTINUED

LOCATION	ITEM	ACTION **REMARKS**
REPAIR - CONTINUED		
7. Body (14)	Door assembly (12)	Lift off, and turn upside down. **Wire (15) will still be connected between connector (10) and rotary switch (16). Rubber seal may remain in door assembly.**
8.	Wire (15)	Using long round-nose pliers, pull out.

NOTE

When removing wires from rotary switch , tag wires and terminals so wires can be connected correctly (page 4-4).

9. Wire (15)	Screw (17)	Using 3/16-inch flat-tip screwdriver, unscrew and take off.
10. Terminal (18)	Wire (15)	Lift off.
11. Wire (19)	Screw (20)	Using 3/16-inch flat-tip screwdriver, loosen.
12. Terminal (21)	Wire (19)	Using long round-nose pliers, pull off.
13. Wire (22)	Screw (23)	Using 3/16-inch flat-tip screwdriver, loosen.
14. Terminal (24)	Wire (22)	Using long round-nose pliers, pull off.

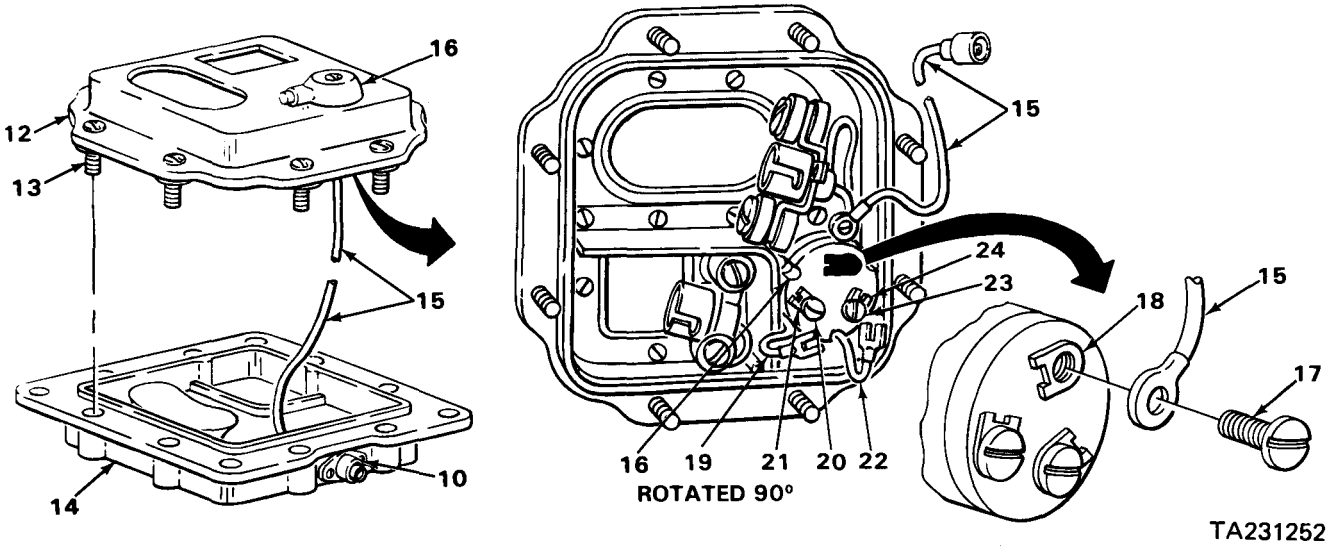

INSIDE DOMELIGHT, 24-VOLT - CONTINUED

LOCATION	ITEM	ACTION **REMARKS**
REPAIR - CONTINUED		
15. Knob (1)	Screw (2) and lockwasher (3)	Using 3/16-inch flat-tip screwdriver, unscrew and take off.
16. Rotary switch (4)	Knob (1)	Lift off.
17.	Nut assembly (5)	Using 7/8-inch box-end wrench, unscrew and take off.
16. Door assembly (6)	Rotary switch (4), gasket (7), and washer (8)	Using 3/16-inch flat-tip screwdriver, pry out.
19. Sockets (9) and (10)	Lamps (11) and (12)	Push in, turn one-quarter turn counterclockwise, and take out.
20. Door assembly (6)	Rubber seal (13)	Lift off.
21. Connector (14)	Two screws (15)	Using 3/16-inch flat-tip screwdriver, unscrew and take out.
22. Body (16)	Connector	Pull off.
23.	Gasket (17)	a. Using 3/16-inch flat-tip screwdriver, pry out. b. Check for damaged parts. c. Replace defective parts.
24.	Gasket (17)	Place in position.
25.	Connector	Place in position.
26. Connector (14)	Two screws (15)	Screw in, and tighten using 3/16-inch flat-tip screwdriver.
27. Sockets (9) and (10)	Lamps (11) and (12)	Place in proper socket, push in, and turn one-quarter turn clockwise.
28. Door assembly (6)	Gasket (7) and washer (8)	Place in position.
29.	Rotary switch (4)	Place in position.
30. Rotary switch (4)	Nut assembly (5)	Screw on, and tighten using 7/8-inch box-end wrench.

INSIDE DOMELIGHT, 24-VOLT - CONTINUED

LOCATION	ITEM	ACTION **REMARKS**
REPAIR - CONTINUED		
31.	Knob (1)	Put in position.
32. Knob (1)	Screw (2) and lockwasher (3)	Screw in, and tighten using 3/16-inch flat-tip screwdriver.
33. Terminal (18) and screw (19)	Wire (20)	Slide under screw-head onto terminal (18).
34. Wire (20)	Screw (19)	Tighten using 3/16-inch flat-tip screwdriver.
35. Terminal (21) and screw (22)	Wire (23)	Slide under screw-head onto terminal (21).
36. Wire (23)	Screw (22)	Tighten using 3/16-inch flat-tip screwdriver.
37. Terminal (24)	Wire (25)	Position on terminal (24).
38. Wire (25)	Screw (26)	Screw in, and tighten using 3/16-inch flat-tip screwdriver.
39. Door assembly (6)	Rubber seal (13)	Put in.
40. Connector (14)	Wire (25)	Push wire into connector (14).

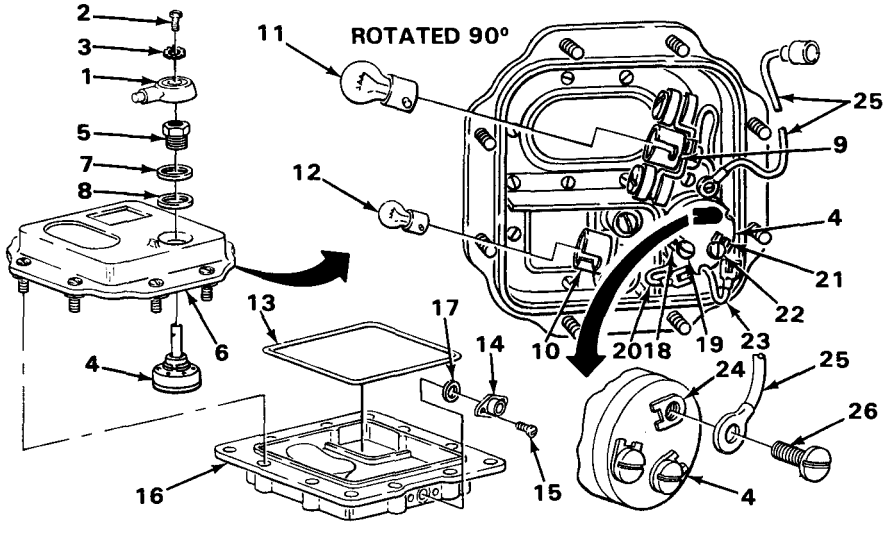

TA231253

INSIDE DOMELIGHT, 24-VOLT - CONTINUED

LOCATION	ITEM	ACTION **REMARKS**
REPAIR - CONTINUED		
41. Body (1)	Door assembly (2)	Place in position.
42. Door assembly (2)	Eight captive screws with washers (3)	Screw in, and tighten using 3/16-inch fiat-tip screwdriver.

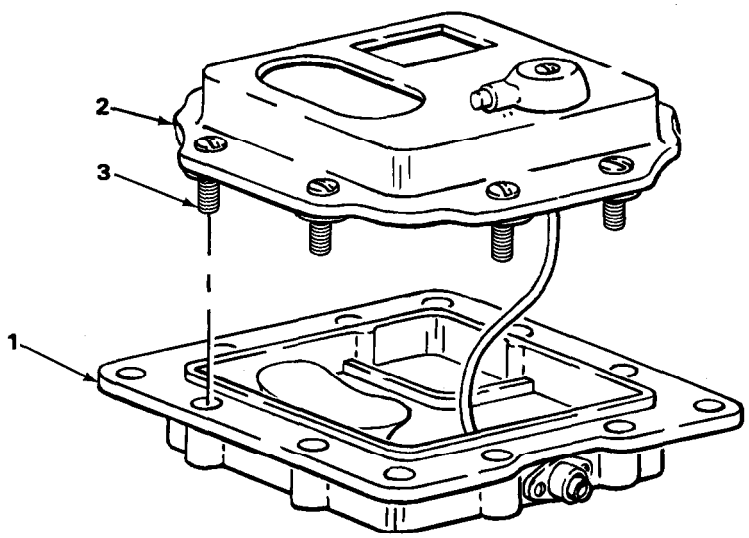

INSTALLATION		
43. Plate (4)	Light assembly (5)	Put in place.
44. Light assembly (5) and plate (4)	Four lock-washers (6), screws (7), and nuts (8)	Screw in, and tighten using 7/16-inch box-end wrench and number two cross-tip screwdriver.
45. Wire harness lead (9) and connector (10)	Connector half (11)	Push together.
46. Van ceiling (12)	Light assembly (5) and plate (4)	Put in place.
47. Van ceiling (12) and plate (4)	Seven lock-washers (13) and screws (14)	Screw in, and tighten using number two cross-tip screwdriver.

TA231254

INSIDE DOMELIGHT, 24-VOLT - CONTINUED

INSTALLATION - CONTINUED

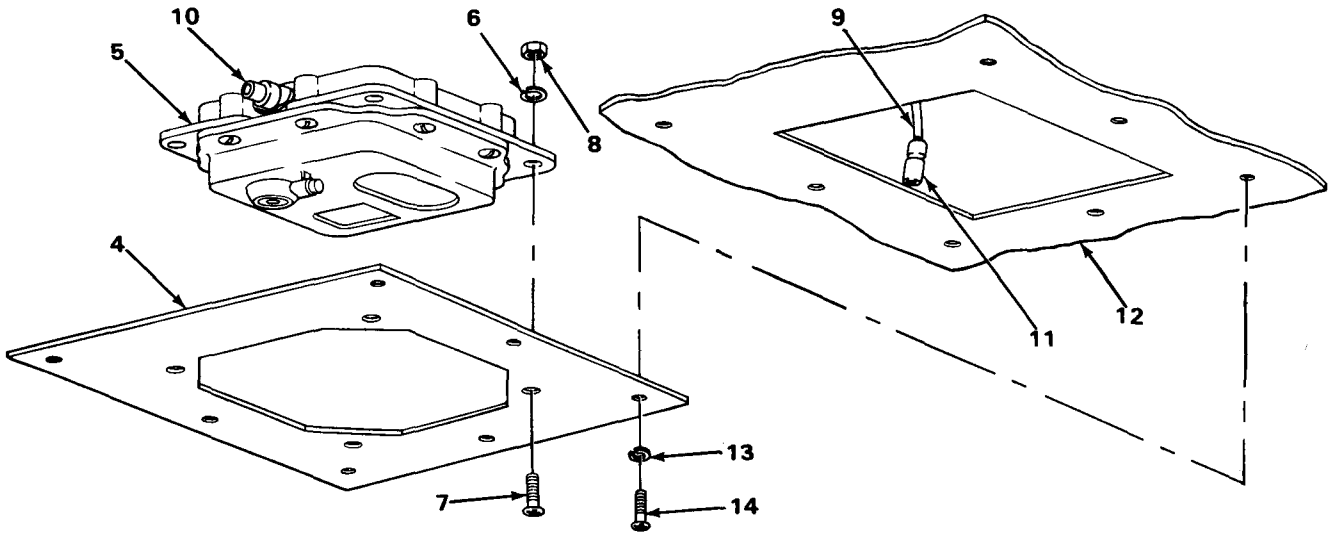

NOTE

FOLLOW-ON MAINTENANCE: Check operation of lights (page 2-22).

TASK ENDS HERE

INSIDE DOMELIGHT, 110-VOLT

This task covers:

a. Removal (page 4-68)
b. Repair (page 4-68)
c. Installation (page 4-70)

INITIAL SETUP

Tools

Pliers, long round-nose
Screwdriver, cross-tip, number two
Screwdriver, flat-tip, 3/16-inch

Materials/Parts

Adhesive (item 1, appendix E)
Brush, acid swabbing (item 4, appendix E)
Solvent, drycleaning (item 18, appendix E)
Gasket, box assembly (as required)

Personnel Required

One

TA231255

INSIDE DOMELIGHT, 110-VOLT - CONTINUED

LOCATION	ITEM	ACTION **REMARKS**

WARNING

Contact with live 110-volt electrical wires could result in serious injury or death. Make sure power source is disconnected before performing maintenance on the electrical system.

NOTE

All 110-volt inside domelights are removed, repaired, and installed the same way. This task is for one; repeat for the others. Tag wires to aid in installation page 4-4).

REMOVAL

1. Door assembly (1)	Captive screw (2)	a. Using 3/16-inch flat-tip screwdriver unscrew all the way. b. Open door(1).
2. Socket assembly (3)	Lamp (4)	Unscrew, and take off.
3. Box assembly (5) and van ceiling (6)	Four screws (7)	a. Using number two cross-tip screwdriver, unscrew and take off. b. Take off assembly (5).
4. Socket assembly (3)	Two screws (8) and wires (9)	a. Using 3/16-inch flat-tip screwdriver, unscrew screws (8) part way. b. Take off wire (9).

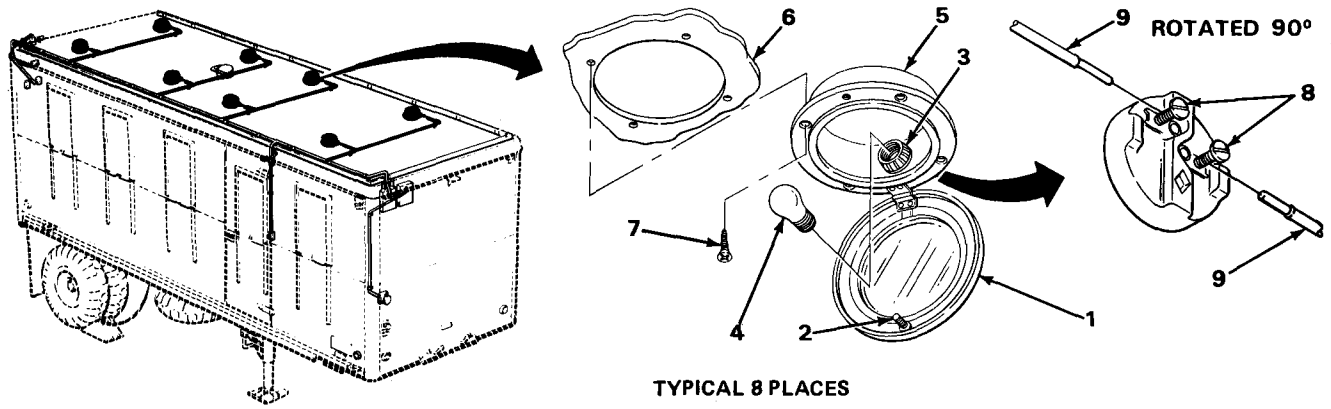

REPAIR

5. Socket assembly (3)	Collar (10) and gasket (11)	Unscrew, and take off.
6. Box assembly (5)	Socket assembly (3)	Lift out.

TA231256

INSIDE DOMELIGHT, 110-VOLT - CONTINUED

LOCATION	ITEM	ACTION **REMARKS**
REPAIR - CONTINUED		
7. Lens (12)	Retaining clip (13)	Using long round-nose pliers, turn so lens (12) can be removed.
8. Door assembly (1)	Lens (12)	Lift out.

WARNING

Drycleaning solvent is both toxic and flammable. Avoid prolonged breathing of vapors, and avoid skin contact. Use only in well-ventilated area, and keep away from open flame or excessive heat. Injury to personnel could result.

9. Box assembly (5)	Gasket (14)	a. Pull off. **Gasket is cemented in place and should be removed only if damaged.** b. Using drycleaning solvent and brush, remove dirt from metal parts.
10.	Gasket (14)	If removed, cement new gasket in position.
11. Door assembly (1)	Lens (12)	Place in position.
12. Lens (12)	Retaining clip (13)	Turn to lock lens in place using long round-nose nose pliers.
13. Box assembly (5)	Socket assembly (3)	Place in position.
14. Socket assembly (3)	Collar (10) and gasket (11)	Screw on, and tighten.

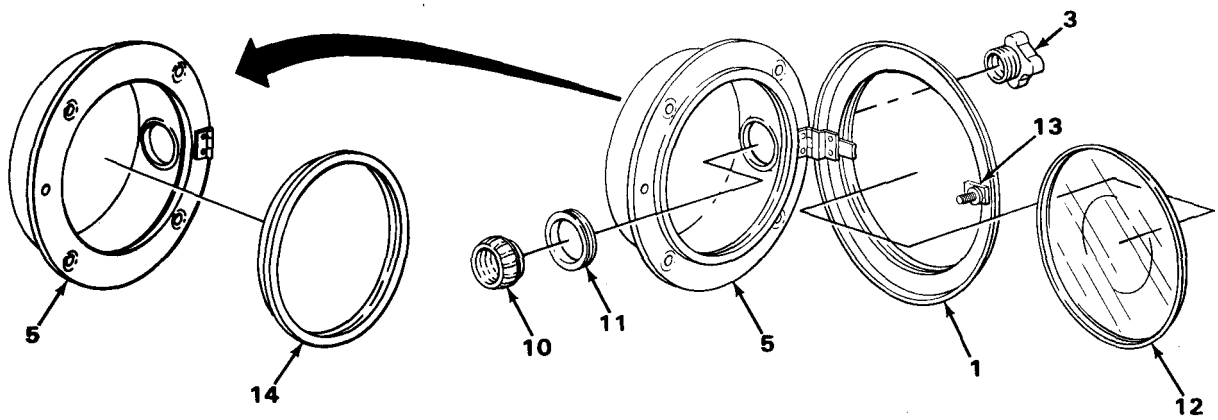

TA231257

INSIDE DOMELIGHT, 110-VOLT - CONTINUED

LOCATION	ITEM	ACTION **REMARKS**
INSTALLATION		
15. Socket assembly (1)	Two screws (2) and wires (3)	a. Wrap wires (3) around screws (2). b. Screw in, and tighten screws (2) using 3/16-inch flat-tip screwdriver.
16. Box assembly (4) and van ceiling (5)	Four screws (6)	a. Put box assembly (4) in place. b. Screw in, and tighten using number two cross-tip screwdriver.
17. Socket assembly (1)	Lamp (7)	Screw in.
18. Door assembly (8)	Captive screw (9)	a. Close door (8). b. Screw in, and tighten using 3/16-inch flat-tip screwdriver.

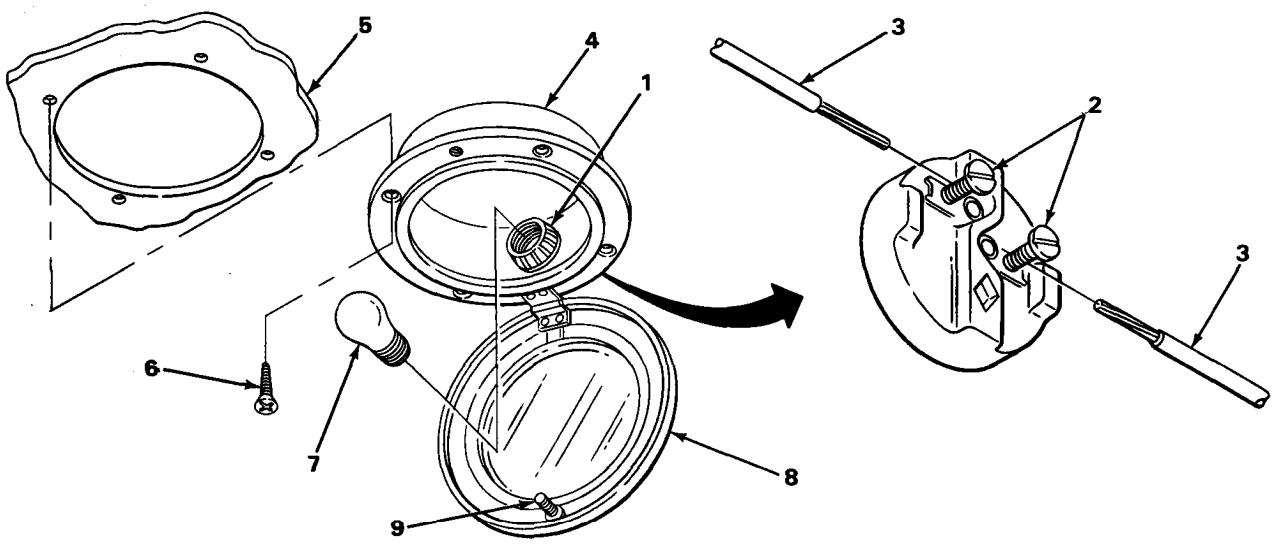

NOTE

FOLLOW-ON MAINTENANCE: Check operation of lights (page 2-22).

TASK ENDS HERE

TA231258

WIRE CONNECTOR

This task covers:

a. Male Connector Repair (page 4-71)
b. Female Connector Repair (page 4-72)
c. Circuit Marker Band Replacement (page 4-73)

INITIAL SETUP

Tools

Pliers, diagonal cutting
Screwdriver, flat-tip, 3/16-inch
Tool, crimping
Tool, etching
Wire stripper, hand

Materials/Parts

Band, marker (appendix G)
Compound, Insulating (item 6, appendix E)
Contact (appendix G)
Shell (appendix G)
Sleeve (appendix G)
Terminal (appendix G)

LOCATION	ITEM	ACTION **REMARKS**
MALE CONNECTOR REPAIR		
1. Wire lead (1)	Connector (2)	Separate halves.
2. Connector to be repaired	Shell (3)	Slide wire lead (1) up until clear of contact (4) and retaining washer (5).
3.	Retaining washer (5)	Take off.
4. Wire lead (1)	Shell (3)	Slide off over contact (4).

NOTE

If only replacing connector (2), skip steps 5, 6a, and 6c.

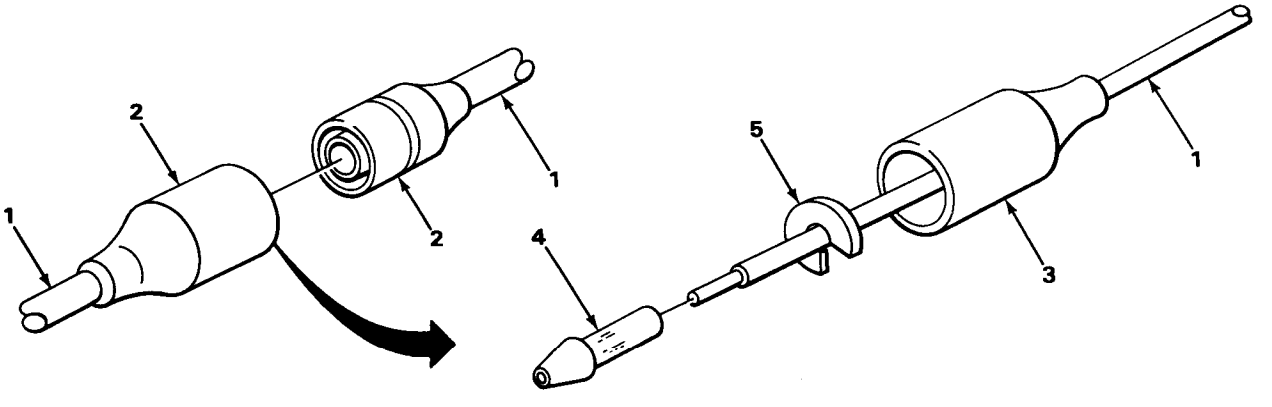

TA231259

WIRE CONNECTOR - CONTINUED

LOCATION	ITEM	ACTION **REMARKS**
MALE CONNECTOR REPAIR - CONTINUED		
5. Wire lead (1)	Contact (2)	a. Cut off lead (1) using cutting pliers. **Be sure enough wire remains to make connection after repair.** b. Get rid of contact (2).
6.	Wire lead (1), contact (2), and shell (3)	a. Using wire stripper, strip insulation at end equal to depth of new contact (2). b. Slide on new shell, and apply compound to wire lead (1). c. Slide end into new contact (2), and using crimping tool, crimp.
7.	Retaining washer (4)	Place on lead (1) at contact (2).
8.	Shell (3)	Slide down wire lead (1) until washer (4) seats.
9.	Connector halves (5) and (6)	Apply compound to outside of female connector, and push together until seated.
10.	Semitrailer lights	Apply power, turn on, and check operation.
FEMALE CONNECTOR REPAIR		
11. Wire lead (7)	Connector halves (5) and (6)	Separate halves.
12. Connector half (5)	Shell (8)	Slide up wire lead (7) until clear of terminal (9).
13.	Wire lead (7)	Using diagonal cutting pliers, cut off terminal (9). **Be sure to leave enough lead for connection after repair.**
14. Wire lead (7)	Shell (8) and sleeve (10)	a. Slide off wire lead (7). b. Get rid of shell (8) and sleeve (10).
15.	Wire lead (7), shell (8), and sleeve (10)	a. Using wire stripper, strip insulation 1/84-inch (3.18 mm) from end, b. Slide on new shell (8) and sleeve (10), and apply compound to wire end lead (7).

WIRE CONNECTOR - CONTINUED

LOCATION	ITEM	ACTION **REMARKS**
FEMALE CONNECTOR REPAIR - CONTINUED		
16.	New terminal (9)	Slide onto wire lead (7), and using crimping tool, crimp end.
17.	Shell (8) and sleeve (10)	Slide down over terminal (9) until seated.
18.	Connector halves (5) and (6)	Apply compound to outside of female connector, and push together until seated.
19.	Semitrailer lights	Apply power, turn on, and check operation (page 2-22).
CIRCUIT MARKER BAND REPLACEMENT		
20.	Marker band (11)	a. Using 3/16-inch flat-tip screwdriver, open tab ends (11) and take off. **Note number on band (11).** b. Get rid of band (11).
21.	New marker band (11)	a. Using etching tool, etch proper number. **See Electrical Schematic on pages 4-78 and 4-79.** b. Place on wire lead, and using crimping tool, bend tab ends (12) over-wire.

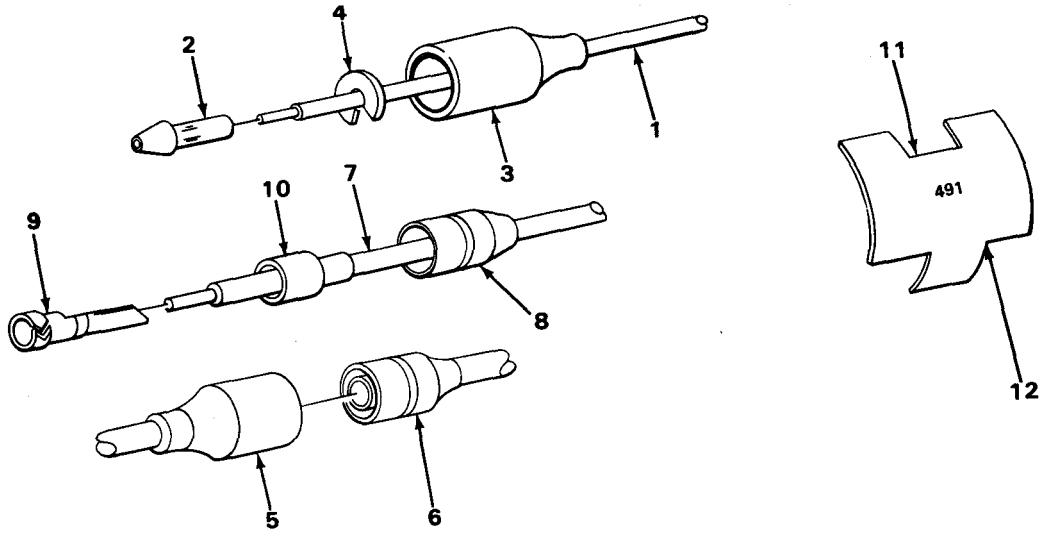

TA231260

CIRCUIT MARKER BAND REPLACEMENT - CONTINUED

NOTE

FOLLOW-ON MAINTENANCE: Check operation of lights (page 2-22).

TASK ENDS HERE

CONNECTOR RECEPTACLE, 24-VOLT

This task covers:

a. Removal (page 4-74)
b. Installation (page 4-75)

INITIAL SETUP

Tools

Pliers, diagonal cutting
Tool, crimping
Wire stripper, hand
Wrench, open-end, 7/16-inch (two required)

Materials/Parts

Connectors, electrical (eight required)
Tape, electrical (item 21, appendix E)

Personnel Required

One

LOCATION	ITEM	ACTION	REMARKS
REMOVAL			
		NOTE	
		Tag wires to aid in installation (page 4-4). if circuit marker bands are missing or not readable, replace (page 4-73).	
1. Cover assembly (1), connector receptacle (2), and frame (3)	Four screws (4) and nuts (5)	Using two 7/16-inch open-end wrenches, unscrew and take off.	
2. Connector receptacle (2)	Cover assembly (1)	Take off.	
3. Connector receptacle (2) and wire harness (6)	Eight wires (7)	Using diagonal cutting pliers, cut where wires enter receptacle (2).	
4. Frame (3)	Connector receptacle (2)	Take off.	

CONNECTOR RECEPTACLE, 24-VOLT - CONTINUED

LOCATION	ITEM	ACTION **REMARKS**
INSTALLATION		
5.	Connector receptacle (2)	Put in place.
6. Connector receptacle (2) and wire harness (6)	Eight harness wires (7), connector receptacle leads (8), and connectors (9)	a. Using wire strippers, strip insulation from ends of wires (7) and leads (8), equal to depth of connectors (9). b. Slide one end of one connector (9) onto one of wires (7). c. Slide other ends of connectors (9) onto corresponding leads (8). d. Using crimping tool, crimp connectors (9) at both ends. c. Tape each connector (9).
7. Connector receptacle (2)	Cover assembly (1)	Put in place.
8. Cover assembly (1), connector receptacle (2), and frame (3)	Two screws (4) and nuts (5)	Screw in, and tighten using two 7/16-inch openend wrenches, leaving bottom holes open.
9.	Remaining screws (4), two ground wires (10), and nuts (5)	a. Put remaining screw (4) in place. b. Put ground wires (10) in place over screw (4). c. Screw on nut (5), and tighten using two 7/16-inch open-end wrenches.

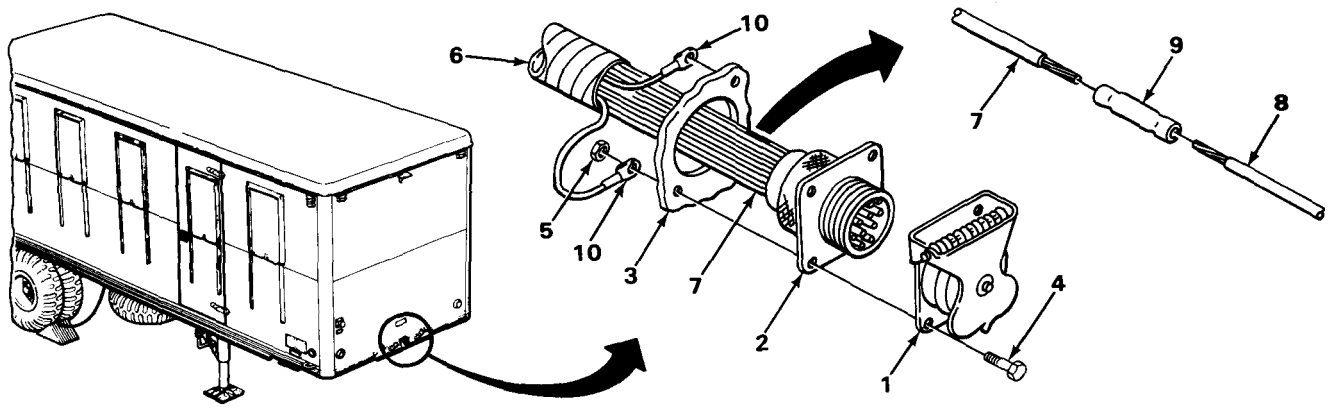

NOTE

FOLLOW-ON MAINTENANCE: Check operation of lights (page 2-22).

TA231261

CONNECTOR RECEPTACLE, 24-VOLT - CONTINUED

INSTALLATION - CONTINUED

TASK ENDS HERE

CONNECTOR RECEPTACLE, 110-VOLT

This task covers:

a. Removal (page 4-76)
b. installation (page 4-77)

INITIAL SETUP

Tools	Personnel Required
Handle, ratchet, 1/2-inch drive Screwdriver, flat-tip, 3/16-inch Socket, 1/2-inch drive, 1/2-inch	One

LOCATION	ITEM	ACTION **REMARKS**

WARNING

Contact with live 110-volt electrical wires could result in serious injury or death. Make sure power source is disconnected before performing maintenance on the electrical system.

REMOVAL

1. Connector receptacle (1)	Four screws (2) and lockwashers (3)	Using 1/2-inch socket and ratchet handle, unscrew and take out.
2. Outside front wall (4)	Connector receptacle (1)	Pull away from wall just far enough to reach behind with 3/16-inch flat-tip screwdriver.

NOTE

Tag wires to aid in installation (page 4-4). If circuit marker bands are missing or not readable, replace (page 4-66).

3. Connector receptacle (1)	Two screws (5)	Using 3/16-inch flat-tip screwdriver, unscrew part way.
4. Connector recptacle (1) and wire harness (7)	Two wires (6)	a. Pull out wires (6). b. Take off receptacle (1).

CONNECTOR RECEPTACLE, 110-VOLT - CONTINUED

LOCATION	ITEM	ACTION **REMARKS**
REMOVAL - CONTINUED		
5. Connector receptacle (1)	Gasket (8)	Take off.
6.	Cover (9) with chain (10)	Unscrew, and take off.
INSTALLATION		
7.	Cover (9) with chain (10)	Screw in until tight.
8.	Gasket (8)	Put in place.
9. Connector receptacle (1) and wire harness (7)	Two wires (6)	Put in proper place.
10.	Two screws (5)	Screw in, and tighten using 3/16-inch flat-tip screwdriver.
11. Outside front wall (4)	Connector receptacle (1)	Put in place.
12. Connector receptacle (1)	Three lockwashers (3) and screws (2)	Screw in, and tighten using 1/2-inch socket and ratchet handle with 1/2-inch drive leaving lower left hole open.
13.	Remaining lockwasher (3) and screw (2)	a. Put chain (10) end on remaining screw (2). b. Put lockwasher (3) on screw (2). c. Screw in, and tighten using 1/2-inch socket and ratchet handle with 1/2-inch drive.

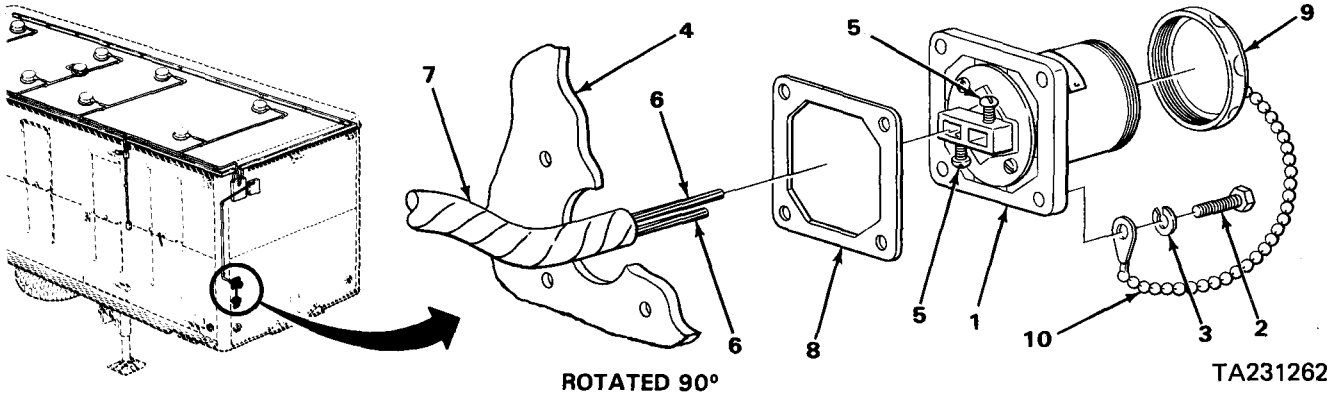

CONNECTOR RECEPTACLE, 110-VOLT - CONTINUED

INSTALLATION - CONTINUED

NOTE

FOLLOW-ON MAINTENANCE: Check operation of lights (page 2-22).

TASK ENDS HERE

ELECTRICAL SCHEMATIC, 24 - VOLT

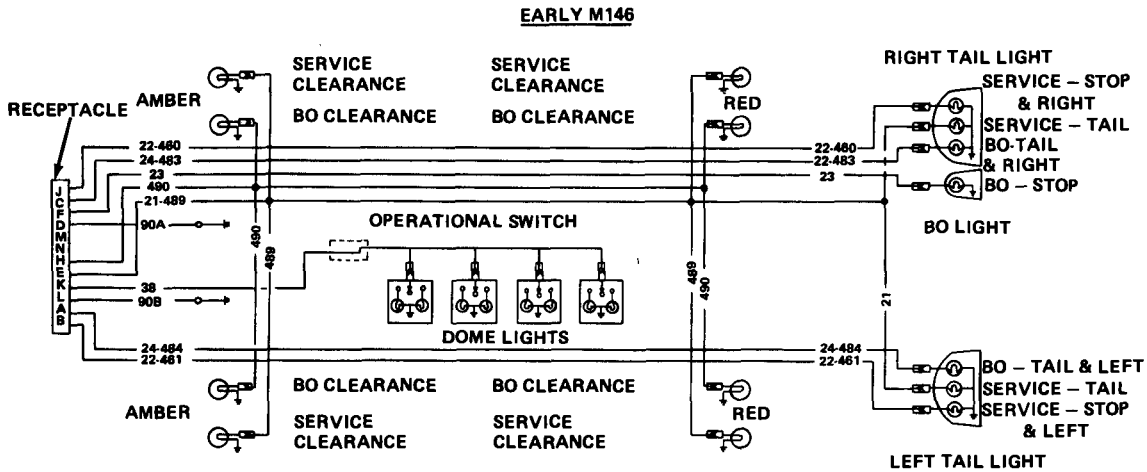

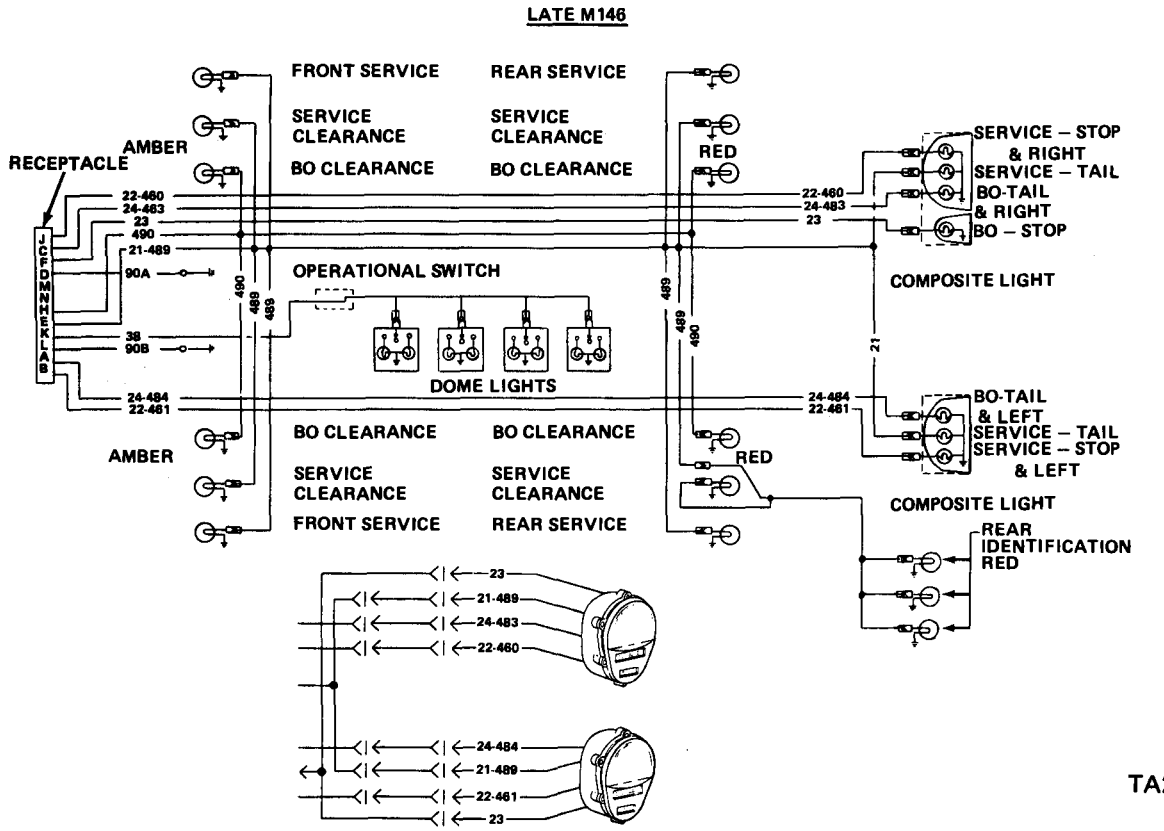

TA231263

ELECTRICAL SCHEMATIC, 110 - VOLT

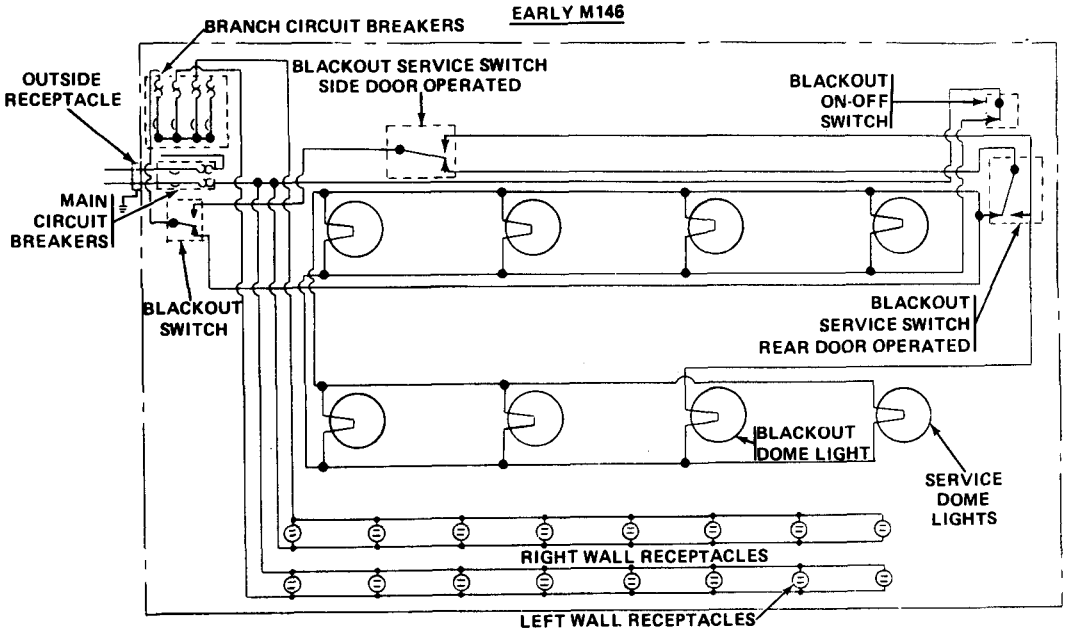

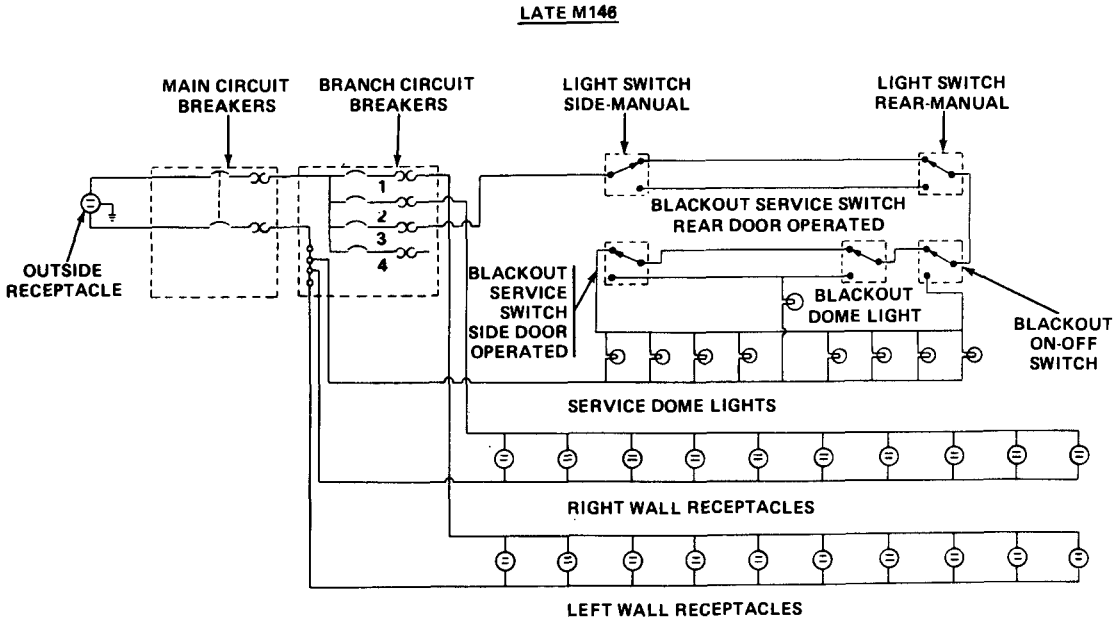

TA231264

Section VIII. BRAKE SYSTEM MAINTENANCE

SERVICE BRAKES, TWO-WHEEL CYLINDER

This task covers:

Adjustment (page 4-81)

INITIAL SETUP

Tools

Gage, thickness, 0.010-inch
Handle, ratchet, 1/4-inch drive
Handle, ratchet, 1/2-inch drive
Socket, 1/4-inch drive, 3/8-inch
Socket, 1/2-inch drive, 5/8-inch

Personnel Required

One

Equipment Condition

Tire and wheel assembly removed (page 4-148.1).

SERVICE BRAKES, TWO-WHEEL CYLINDER - CONTINUED

LOCATION	ITEM	ACTION REMARKS

ADJUSTMENT

WARNING

Do not adjust brakeshoes when brakedrums are hot. When touched, overheated brakedrums can cause severe burns to personnel.

NOTE

Both service brakes are adjusted the same way. This task is for one; repeat for the other.

1. Brakedrum (1) and stud (2)	Nut (3), lock-washer (4), and inspection hole cover (5)	a. Using 5/8-inch socket and ratchet handle with 1/2-inch drive, unscrew and take off nut (3) and lockwasher (4). b. Take off cover (5).
2. Brakedrum (1)	Inspection hole (6) and adjusting stud (7)	a. Rotate drum (1) until inspection hole (6) lines up with stud (7). b. Insert 0.010-inch thickness gage between surface of drum and brake lining. c. Using 3/8-inch socket and ratchet handle with 1/4-inch drive, turn stud (6) clockwise until there is a slight drag on the thickness gage. d. Repeat steps 2a thru c for other brakeshoe.
3. Brakedrum (1) and stud (2)	Inspection hole cover (5), lock-washer (4), and nut (3)	a. Put cover (5) in place. b. Screw in, and tighten lockwasher (4) and nut (3) using 5/8-inch socket and ratchet handle with 1/2-inch drive.

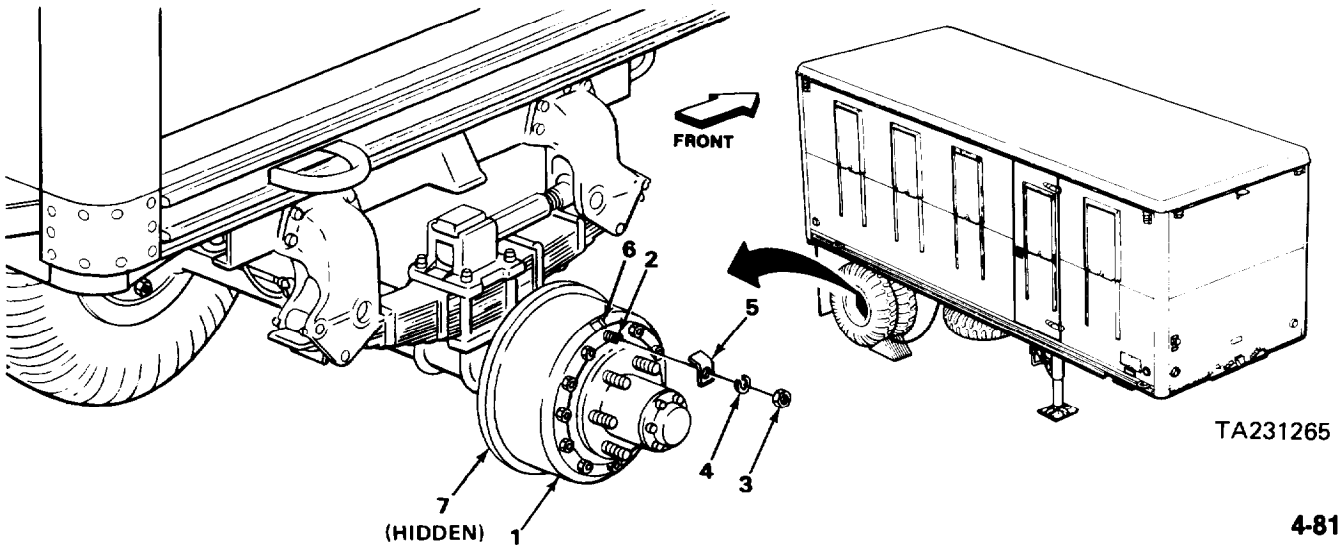

SERVICE BRAKES, TWO-WHEEL CYLINDER - CONTINUED

ADJUSTMENT - CONTINUED

NOTE

FOLLOW-ON MAINTENANCE:

1. Install tire and wheel assembly (page 4-148.1).
2. Test operation of brakes (page 2-23).

TASK ENDS HERE

SERVICE BRAKES, ONE-WHEEL CYLINDER OPTION

This task covers:

Adjustment (page 4-82)

INITIAL SETUP

Tools

Gage, thickness, 0.005-inch
Gage, thickness, 0.010-inch
Handle, ratchet, 1/2-inch drive
Socket, 1/2-inch drive, 5/8-inch
Wrench, open-end, 1/2-inch
Wrench, open-end, 11/16-inch
Wrench, open-end, 11/16-inch
Wrench, open-end, 11/8-inch

Personnel Required

One

Equipment Condition

Tire and wheel assembly removed (page 4-148.1).

LOCATION	ITEM	ACTION **REMARKS**
ADJUSTMENT		
	NOTE	
	Both service brakes are adjusted the same way. This task is for one; repeat for others.	
1. Brakedrum (1) and bolt (2)	Nut (3), lockwasher (4), and inspection hole cover (5)	Using 5/8-inch socket and ratchet handle with 1/2-inch drive, unscrew and take off.
2. Backing plate (6)	Locknut (7)	Using 11/16-inch open-end wrench, loosen.
3. Brakedrum (1)	Inspection hole (8)	a. Rotate brakedrum (1) until inspection hole (8) is 11/2-inches from end of one brake lining (9) nearest anchor pin (10).

SERVICE BRAKES, ONE-WHEEL CYLINDER OPTION - CONTINUED

LOCATION	ITEM	ACTION **REMARKS**
ADJUSTMENT - CONTINUED		
3. Continued		b. Insert 0.005-inch thickness gage between surface of drum and brake lining (9).
4. Backing plate (6)	Anchor pin (10) and locknut (7)	a. Using 1/2-inch open-end wrench, turn anchor pin until 0.005-inch clearance is obtained. b. Using 1/2-inch open-end wrench, hold anchor pin, and using 11/8-inch open-end wrench, tighten locknut.
5. Brakedrum (1)	Inspection hole (8)	a. Rotate brakedrum until inspection hole is 11/2-inch from other end of same brake lining (9). b. Insert 0.010-inch thickness gage between surface of drum and brake lining (9).
6. Backing plate (6)	Cam nut (11)	Using 11/16-inch wrench, turn until 0.010-inch clearance is obtained. **Repeat steps 2 thru 6 for other brakeshoe.**
7. Brakedrum (1) and bolt (2)	Nut (3), lockwasher (4), and inspection hole cover (5)	Put on, and tighten using 5/8-inch socket and ratchet handle with 1/2-inch drive.

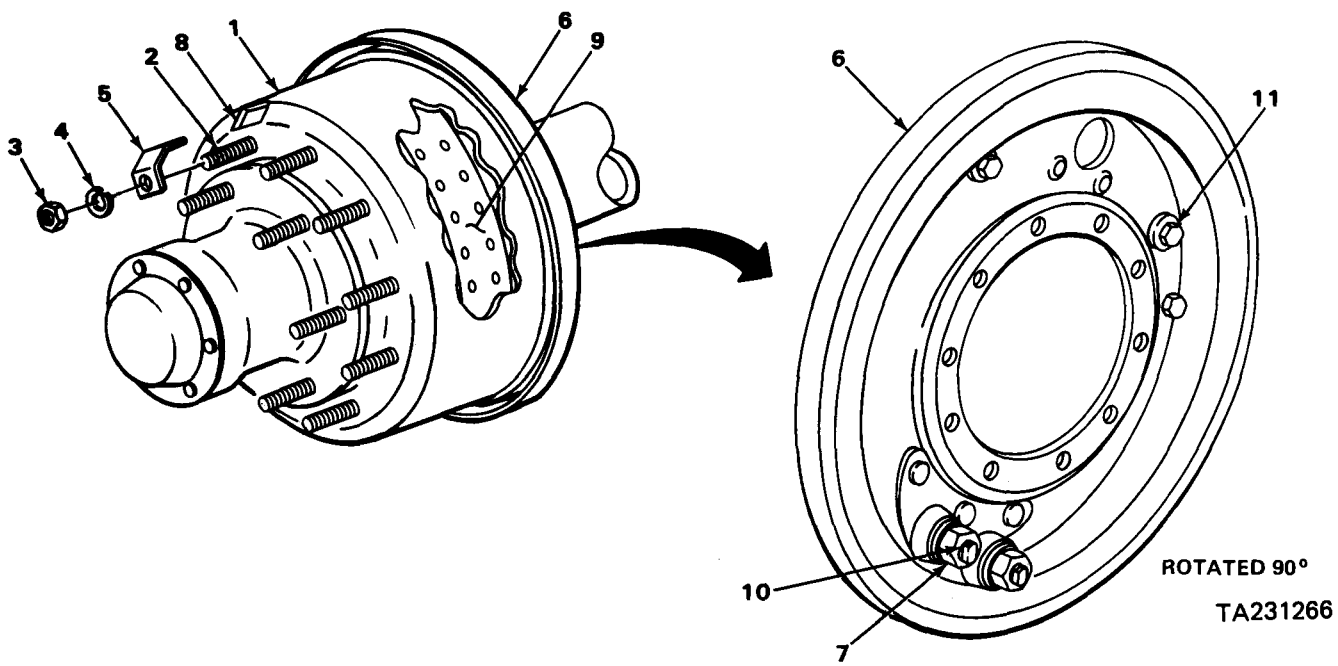

SERVICE BRAKES, ONE-WHEEL CYLINDER OPTION - CONTINUED

ADJUSTMENT - CONTINUED

NOTE

FOLLOW-ON MAINTENANCE:

1. Install tire and wheel assembly (page 4-148.1).
2. Test operation of brakes (page 2-23).

TASK ENDS HERE

BRAKESHOE ASSEMBLIES, TWO-WHEEL CYLINDER

This task covers

a. Removal (page 4-85)
b. Cleaning (page 4-86)
c. Inspection/Replacement (page 4-86)
d. Installation (page 4-87)

INITIAL SETUP

Tools

Brush, paint, 17/16-inch
Compressor unit, reciprocating air
Drill, electric, portable
Drill, twist, 3/16-inch
Extension, 1/2-inch drive, 6-inch
Gage, depth
Goggles, protective
Gun, air, blow
Hammer, hand, ball-peen, 2-lb
Handle, ratchet, 1/2-inch drive
Hose assembly, rubber
Mask, protective
Pliers, repair, brake
Pliers, slipjoint
Shield, face
Socket, 1/2-inch drive, 1/2-inch

Materials/Parts

Solvent, drycleaning, PD-680 (item 18, appendix E)

Personnel Required

One

Equipment Condition

Air reservoir drained (page 2-13).
Hub and drum removed (page 4-143).

LOCATION	ITEM	ACTION	REMARKS

WARNING

Brake linings contain asbestos fibers. Protective mask must be worn while performing maintenance on brake linings. Failure to do so could result in injury or death to personnel.

BRAKESHOE ASSEMBLIES, TWO-WHEEL CYLINDER - CONTINUED

LOCATION	ITEM	ACTION **REMARKS**

NOTE

Both sets of brakeshoe assemblies are removed, cleaned, inspected/replaced, and installed the same way. This task is for one set; repeat for the other.

REMOVAL

1. Two brakeshoe assemblies (1) and four pins (2) and (3)	Four springs (4)	Using brake repair pliers, take off.
2. Two brakeshoe assemblies (1) and spider (5)	Two screws (6), washers (7), and lockwashers (8)	Using 1/2-inch socket, 6-inch extension, and ratchet handle with 1/2-inch drive, unscrew and take off.
3. Spider (5) and backing plate (9)	Two brakeshoe assemblies (1)	Take off.
4. Spider (5)	Two removable pins (2)	Using slip-joint pliers, take out.

NOTE

If fixed pins are not broken, skip step 5.

5.	Two fixed pins (3)	Using portable drill and 3/16-inch twist drill, drill out.

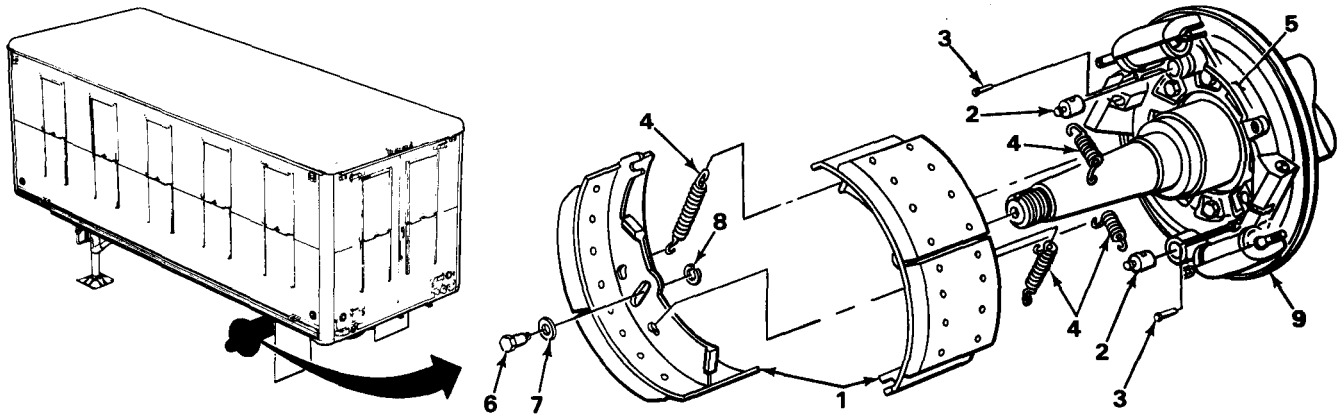

TA231267

BRAKESHOE ASSEMBLIES, TWO-WHEEL CYLINDER - CONTINUED

LOCATION	ITEM	ACTION **REMARKS**

CLEANING

WARNING

Drycleaning solvent PD-680 is both toxic and flammable, Avoid prolonged breathing of vapors, and avoid skin contact. Use only in well-ventilated area, and keep away from open flame or excessive heat. Injury to personnel could occur.

Particles blown by compressed air are hazardous. Make certain air stream is directed away from user and other personnel in the area. To prevent injury, protective goggles or face shield must be worn when using compressed air.

CAUTION

Use care in handling brakeshoe assemblies. Grease, oil, solvent, or fingerprints on lining surfaces will ruin linings.

NOTE

For more information on how to clean parts, go to General Maintenance instructions (page 4-1).

6.	All metal parts	a. Using solvent PD-680 and brush, clean. b. Using compressor unit, air gun, and rubber hose assembly, dry with low pressure air.

INSPECTION/REPLACEMENT

NOTE

For more information on how to inspect parts, go to General Maintenance Instructions (page 4-1).

7.	Springs (1)	Look for spaces between coils, extended length, and other signs of stretch.

WARNING

Worn brake linings could result in injury or death to personnel. When brake linings are worn to within 0.0625-inch (1.59 mm) of rivets, they must be replaced.

8.	Brake lining (2)	a. Look for glazed or loose condition. b. Using depth gage, measure lining thickness. c. If glazed, loose, or worn, notify Direct Support Maintenance.

BRAKESHOE ASSEMBLIES, TWO-WHEEL CYLINDER - CONTINUED

LOCATION	ITEM	ACTION **REMARKS**
INSPECTION/REPLACEMENT - CONTINUED		
9.	All parts	Look for bends, cracks, gouges, breaks, or severe signs of wear.
INSTALLATION		
10. Spider (3)	Two fixed pins (4)	Using ball-peen hammer, tap into place.
11.	Two removable pins (5)	Put in place. **Make sure slots in pins lineup with slots in spider.**
12. Two brakeshoe assemblies (6)	Two washers (7), screws (8), and lockwashers (9)	Put in place.
13. Spider (3) and backing plate (10)	Two brakeshoe assemblies (6) with screws (8), washers (7), and lockwashers (9)	a. Put in place. b. Screw in, and tighten screws (8) using 1/2-inch socket, 6-inch extension, and ratchet handle with 1/2-inch drive.
14. Two brakeshoe assemblies (6) and pins (4) and (5)	Four springs (1)	Using brake repair pliers, put in place. **Short springs goon removeable pins.**

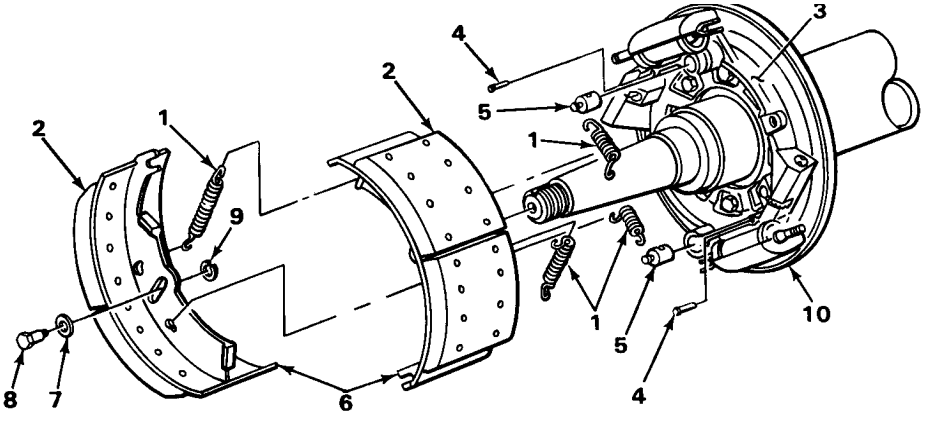

NOTE

FOLLOW-ON MAINTENANCE: Install hub and drum page 4-143).

TASK ENDS HERE

TA231268

BRAKESHOE ASSEMBLIES, ONE-WHEEL CYLINDER OPTION

This task covers:

a. Removal (page 4-88)
b. Cleaning (page 4-89)
c. Inspection/Replacement (page 4-90)
d. Installation (page 4-90)

INITIAL SETUP

Tools

Brush, paint, 17/16-inch
Compressor unit, reciprocating air
Gage, depth
Gun, blow, air
Hammer, hand, ball-peen, 24b
Handle, ratchet, 1/2-inch drive
Mask, protective
Pliers, repair, brake
Pliers, slip-joint
Pliers, straight-jaw
Screwdriver, flat-tip, 3/16-inch
Socket, deep well, 1/2-inch drive, 7/16-inch

Materials/Parts

Solvent, drycleaning, PD-680 (item 18, appendix E)

Personnel Required

One

Equipment Condition

Air reservoir drained (page 2-13).
Hub and drum removed (page 4-143).

LOCATION	ITEM	ACTION	REMARKS

WARNING

Brake linings contain asbestos fibers. Protective mask must be worn while performing maintenance on brake linings. Failure to do so could result in injury or death to personnel.

NOTE

Both sets of brakeshoes are removed, cleaned, inspected/replaced, and installed the same way. This task is for one set; repeat for the other.

REMOVAL

1.	Two anchor pins (1)	Two C-washers (2) and strap (3)	Using 3/16-inch flat-tip screwdriver and ball-peen hammer, take off washers (2) and strap (3).
2.	Two retract spring pins (4)	Brake retract spring (5)	Using brake repair pliers, take off.

BRAKESHOE ASSEMBLIES, ONE-WHEEL CYLINDER OPTION - CONTINUED

LOCATION	ITEM	ACTION **REMARKS**
REMOVAL - CONTINUED		
3. Two brake guide pins (6)	Two nuts (7), two springs (8), and four cap washers (9)	Using 7/16-inch deep well socket and ratchet handle with 1/2-inch drive, unscrew and take off.
4. Brake cylinder (10) and two anchor pins (1)	Two brakeshoes (11)	Pull apart, and slide off.
5. Two retract spring pins (4)	Two cotter keys (12)	a. Using straight-jaw pliers, take out. b. Take out spring pins (4).

WARNING

Drycleaning solvent PD-680 is both toxic and flammable. Avoid prolonged breathing of vapors, and avoid skin contact. Use only in well-ventilated area, and keep away from open flame or excessive heat. Injury to personnel could occur.

Particles blown by compressed air are hazardous. Make certain air stream is directed away from user and other personnel in the area. To prevent injury, protective goggles or face shield must be worn when using compressed air.

CAUTION

Use care in handling brakeshoe assemblies. Grease, oil, solvent, or fingerprints on lining surfaces will ruin linings.

6.	All metal parts	a. Using drycleaning solvent and brush, clean.

TA231269

BRAKESHOE ASSEMBLIES, ONE-WHEEL CYLINDER OPTION - CONTINUED

LOCATION	ITEM	ACTION **REMARKS**
CLEANING - CONTINUED		
6. Continued		b. Using compressor and air gun, dry with low pressure air.
INSPECTION/REPLACEMENT		

WARNING

Worn brake linings could result in injury or death to personnel, When brake linings are worn to within 0.0625-inch (1.59 mm) of rivets, they must be replaced.

NOTE

For more information on how to inspect parts, go to General Maintenance Instructions (page 4-1).

7.	Brakeshoe linings (1)	a. Look for glazed or loose condition. b. Using depth gage, measure lining thickness. c. If glazed, loose, or worn, notify Direct Support Maintenance.
8.	All parts	Look for bends, cracks, gouges, breaks or severe signs of wear.
INSTALLATION		
9. Two brakeshoes (2)	Two retract spring pins (3)	Put in.
10. Two retract spring pins (3)	Two cotter keys (4)	Put in, and spread using straight jaw pliers.
11. Two anchor pins (5) and brake guide pins (6)	Two brakeshoes (2)	Put on, and slide into place. **Be sure brakeshoes and brake cylinders (7) line up properly.**
12. Two anchor pins (5)	Strap (8) and two C-washers (9)	Put on using slip-joint pliers and ball-peen hammer.

BRAKESHOE ASSEMBLIES, ONE-WHEELCYLINDER OPTION - CONTINUED

LOCATION	ITEM	ACTION **REMARKS**
INSTALLATION - CONTINUED		
13. Two brake guide pins (6)	Two springs (10), four cap washers (11), and two nuts (12)	Screw on, and tighten using 7/16-inch deep well socket and ratchet handle with 1/2-inch drive.
14. Two retract spring pins (3)	Brake retract spring (13)	Put on using brake repair pliers.

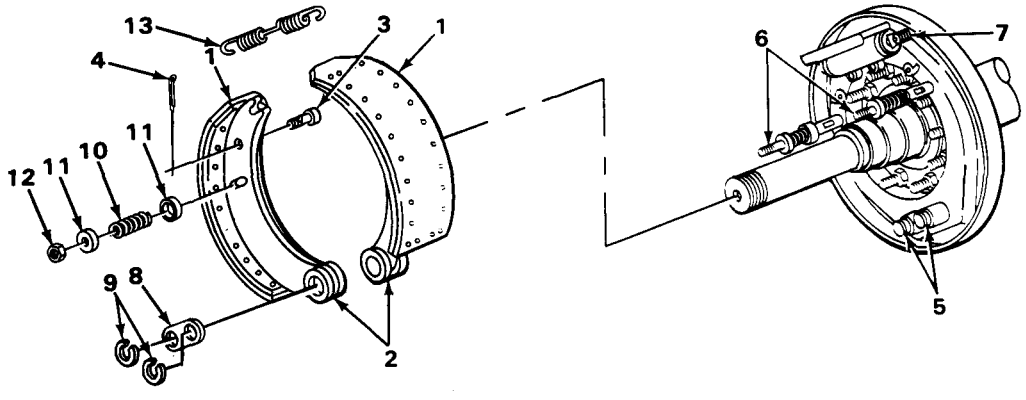

NOTE

FOLLOW-ON MAINTENANCE: Install hub and drum (page 4-143).

TASK ENDS HERE

TA231270

BACKING PLATE AND SPIDER ASSEMBLY, TWO-WHEEL CYLINDER

This task covers:

a. Removal (page 4-92)
b. Repair of Spider Assembly (page 4-93)
c. Installation (page 4-94)

INITIAL SETUP

Tools

Extension, 1/2-inch drive, 3-inch
Hammer, hand, ball-peen, 2-lb
Handle, ratchet, 1/2-inch drive
Handle, ratchet, 3/8-inch drive
Pliers, long round-nose
Pliers, snapring
Scribe, machinist's
Socket, 3/8-inch drive, 3/8-inch
Socket, 1/2-inch drive, 13/16-inch
Wrench, box-end, 7/8-inch

Personnel Required

One

Equipment Condition

Wheel cylinders removed (page 4-103).

LOCATION	ITEM	ACTION **REMARKS**

NOTE

Repair consists of replacement of adjustment assemblies in the spider assembly.

Both backing plates and spider assemblies are removed and installed the same way, Both spider assemblies are repaired the same way. This task covers one backing plate and spider assembly; repeat for the others.

REMOVAL

1. Spider(1), spindle (2), and backing plate (3)	Ten screws (4) and locknuts (5)	a. Using scribe, matchmark backing plate (3) and spindle (2). b. Using 13/16-inch socket, 3-inch extension ratchet handle with 1/2-inch drive, and 7/8-inch box-end wrench, unscrew and take off.
2. Spindle (2)	Backing plate (3) and spider (1)	Take off.
3. Spider (1)	Stud (6) and screw (7)	a. Using 3/8-inch socket and ratchet handle with 3/8-inch drive, turn stud (6) counterclockwise until screw (7) is able to come out of spider (1).

BACKING PLATE AND SPIDER ASSEMBLY, TWO-WHEEL CYLINDER - CONTINUED

LOCATION	ITEM	ACTION **REMARKS**
REMOVAL - CONTINUED		
3. Continued		b. Take screw (7) out of spider (1).
4. Spider (1) and worm (8)	Gear (9)	Take out.
5. Spider (1) and ring (10)	Washer (11)	Using snapring pliers, take off.
6. Spider (1) and worm (8)	Ring (10)	Using long round-nose pliers, take off.
7. Spider (1)	Stud (6) with worm (8) and sleeve (12)	a. Using ball-peen hammer, tap stud (6) through spider (1). b. Using long round-nose pliers, take out and separate. c. Perform steps 3 thru 7b for remaining adjustment assembly.
8. Backing plate (3)	Spider (1)	Take off.
REPAIR OF SPIDER ASSEMBLY		
9. Stud (6)	Worm (8)	Put in place.

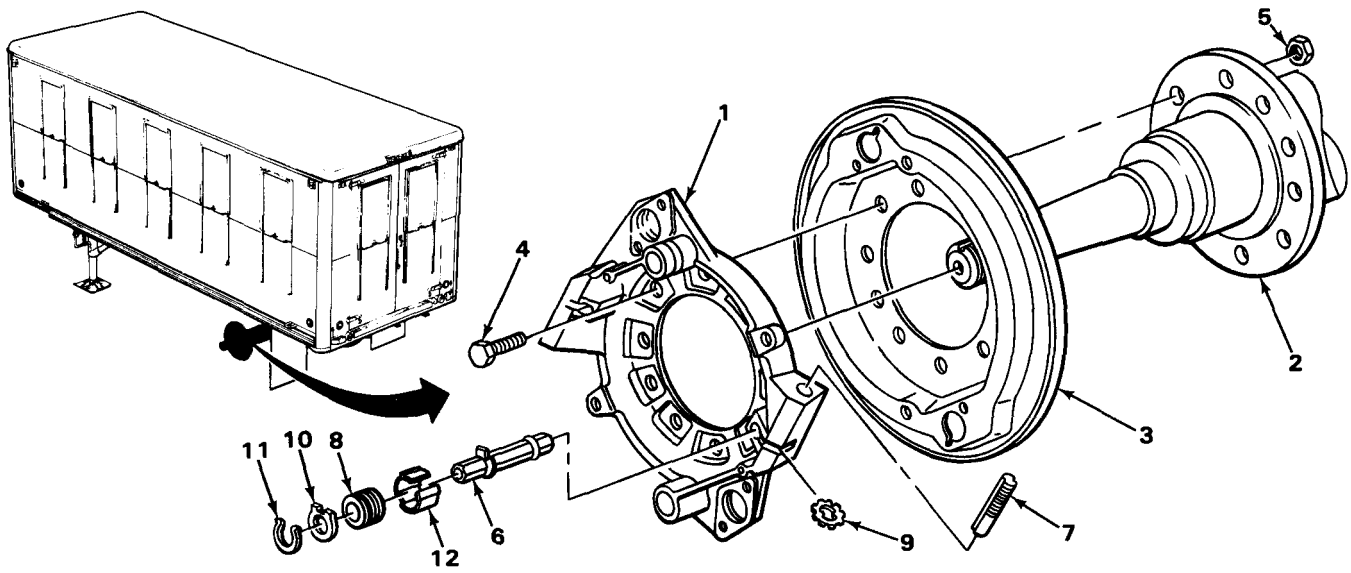

TA231271

BACKING PLATE AND SPIDER ASSEMBLY, TWO-WHEEL CYLINDER - CONTINUED

LOCATION	ITEM	ACTION **REMARKS**
REPAIR OF SPIDER ASSEMBLY - CONTINUED		
10. Worm (1)	Sleeve (2)	Put in place.
11. Spider (3)	Stud (4), with worm (1), and sleeve (2)	Using ball-peen hammer, tap in place. **Make sure sleeve opening lines up with opening in spider for gear.**
12. Spider (3) and worm (1)	Ring (5)	Put in place.
13. Spider (3) and ring (5)	Washer (6)	Using snapring pliers, put in place.
14. Spider (3) and worm (1)	Gear (7)	Put in place making sure gear (7) meshes with grooves in worm (1).
15. Spider (3)	Screw (8) and stud (4)	a. Put screw (8) in place. b. Using 3/8-inch socket and ratchet handle with 3/8-inch drive, turn stud (4) clockwise until screw (8) is completely in spider (3). c. Repeat steps 9 thru 15b for remaining adjustment assembly.
INSTALLATION		
16. Backing plate (9)	Spider (3)	Put in place.
17. Spindle (10)	Backing plate (9)	Noting matchmarks, put in place.
18. Spider (3) and spindle (10)	10 screws (11) and locknuts (12)	Screw in, and tighten using 13/16-inch socket, 3-inch extension, ratchet handle with 1/2-inch drive, and 7/8-inch box-end wrench.

BACKING PLATE AND SPIDER ASSEMBLY, TWO-WHEEL CYLINDER - CONTINUED

INSTALLATION - CONTINUED

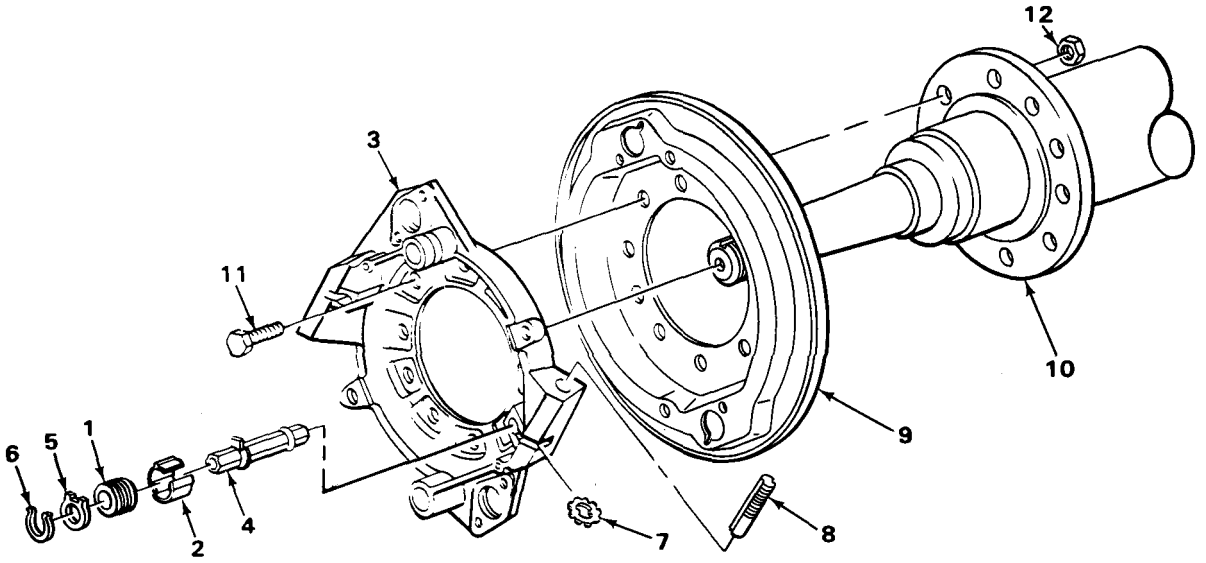

NOTE

FOLLOW-ON MAINTENANCE:

1. Install wheel cylinders (page 4-103).
2. Test operation of brakes (page 2-23).

TASK ENDS HERE

BACKING PLATE, ONE-WHEEL CYLINDER OPTION

This task covers:

a. Removal (page 4-96)
b. Installation (page 4-96)

INITIAL SETUP

Tools

Extension, 1/2-inch drive, 6-inch
Handle, ratchet, 1/2-inch drive
Scribe, machinist's
Socket, 1/2-inch drive, 3/16-inch
Wrench, box-end, 7/8-inch
Wrench, open-end, 3/8-inch
Wrench, open-end, 1/2-inch
Wrench, open-end, 9/16-inch
Wrench, open-end, 11/16-inch

Personnel Required

One

Equipment Condition

Wheel cylinder removed (page 4-106).

TA231272

BACKING PLATE, ONE-WHEEL CYLINDER OPTION - CONTINUED

LOCATION	ITEM	ACTION **REMARKS**

NOTE

Both backing plates are removed and installed the same way. This task is for one; repeat for the other.

REMOVAL

1. Brake guide pin (1)	Spring (2) and cap washer (3)	a. Take off. b. Repeat for other guide pin.
2. Backing plate (4) and spindle (5)	10 screws (6) and locknuts (7)	a. Using scribe, matchmark backing plate (4) and spindle (5). b. Using 13/16-inch socket, 6-inch extension, ratchet handle with 1/2-inch drive, and 7/8-inch box-end wrench, unscrew and take off.
3. Spindle (5)	Backing plate (4)	Take off.
4. Backing plate (4)	Brake guide pin (1), nut (8), and lockwasher (9)	a. Using 3/8-inch and 9/16-inch open-end wrenches, unscrew and take off. b. Repeat for other brake guide pin (1).
5.	Anchor pin (10), nut (11), and lockwasher (12)	a. Using 1/2-inch and 11/16-inch open-end wrenches, unscrew and take off. b. Repeat for other anchor pin.

INSTALLATION

6.	Anchor pin (10), lockwasher (12), and nut (11)	a. Screw in, and tighten using 1/2-inch and 11/16-inch open-end wrenches. b. Repeat for other anchor pin.
7.	Brake guide pin (1), lockwasher (9), and nut (8)	a. Screw in, and tighten using 3/8-inch and 9/16-inch open-end wrenches. b. Repeat for other brake guide pin.
8. Spindle (5)	Backing plate (4)	Noting matchmarks, put in place.

BACKING PLATE, ONE-WHEEL CYLINDER OPTION - CONTINUED

LOCATION	ITEM	ACTION **REMARKS**
INSTALLATION - CONTINUED		
9. Spindle (5) and backing plate (4)	10 screws (6) and locknuts (7)	Screw in, and tighten using 13/16-inch socket, 6-inch extension, ratchet handle with 1/2-inch drive, and 7/8-inch box-end wrench.
10. Brake guide pin (1)	Spring (2) and cap washer (3)	a. Put in place. b. Repeat for other guide pin.

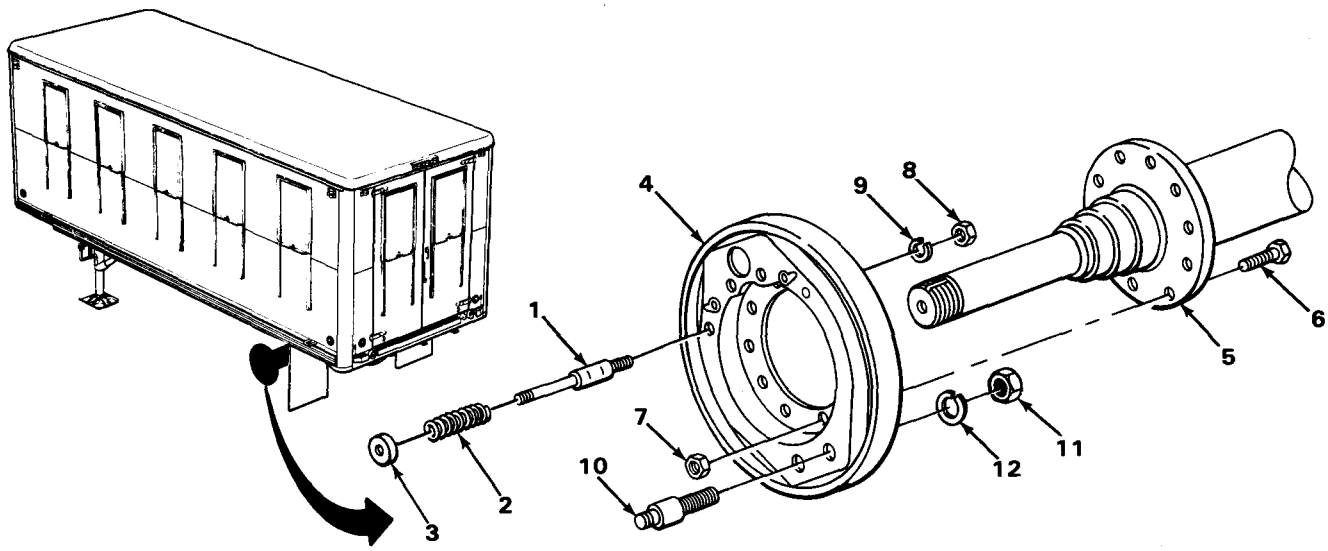

NOTE

FOLLOW-ON MAINTENANCE:

1. Install wheel cylinders (page 4-106).
2. Test operation of brakes (page 2-23).

TASK ENDS HERE

TA231273

BLEEDING BRAKE FLUID, BOTH TWO AND ONE-WHEEL CYLINDER OPTIONS

This task covers:

Bleeding (page 4-98)

INITIAL SETUP

Tools

Wrench, box-end, 7/16-inch

Materials/Parts

Container, plastic
Fluid, brake (item 3, appendix E)
Rags, wiping (item 16, appendix E)
Tube, rubber

Personnel Required

Two

Equipment Condition

Semitrailer coupled to towing vehicle (page 2-18).

LOCATION	ITEM	ACTION **REMARKS**
BLEEDING		
		CAUTION Bleeder screws are easily damaged. Be careful when loosening and tightening bleeder screws.
		NOTE Both two and one-wheel cylinder brakes are bled the same way. This task is for two-wheel cylinder brakes; repeat for one-wheel cylinder brakes.
Back of backing plate (1)	Bleeder screw (2)	a. Fill master cylinder with brake fluid (page 4-5). b. Using 7/16-inch box-end wrench, unscrew part way. **Screw is turned just enough to loosen. It may have to be re-tightened to stop brake fluid from leaking.** c. Put one end of rubber tube on screw and the other end in container partially filled with brake fluid.

BLEEDING BRAKE FLUID, BOTH TWO AND ONE-WHEEL CYLINDER OPTIONS - CONTINUED

LOCATION	ITEM	ACTION **REMARKS**
BLEEDING - CONTINUED		
		NOTE While bleeding brakes, keep checking master cylinder to make sure it has fluid in it.
Continued		d. Have assistant pump brake pedal six times, then hold pedal down. e. Using 7/16-inch box-end wrench, open bleeder screw (2). f. When fluid stops, close screw (2). **Repeat until bubbles stop.** g. Repeat steps 1a thru 1e for remaining cylinders. **For the other wheel, do top cylinder first.**

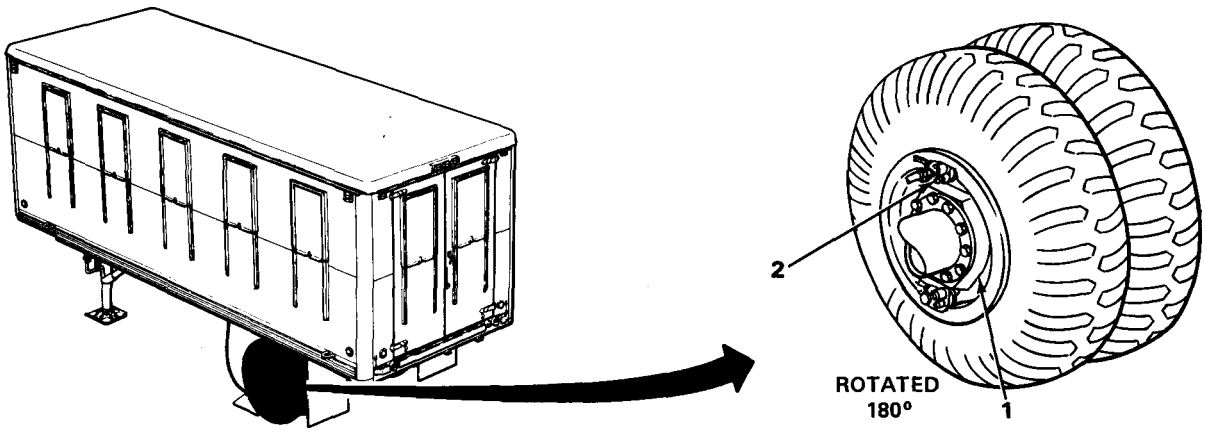

NOTE

FOLLOW-ON MAINTENANCE:

1. Check operation of brakes (page 2-23).
2. Uncouple semitrailer from towing vehicle (page 2-18).

TASK ENDS HERE

TA231274

MASTER CYLINDER

This task covers:

a. Removal (page 4-100)
b. Installation (page 4-101)

INITIAL SETUP

Tools

Caps, vise jaw
Extension, 1/2-inch drive, 5-inch
Handle, ratchet, 1/2-inch drive
Pan, drain
Screwdriver, flat-tip, 3/16-inch
Socket, 1/2-inch drive, 9/16-inch
Vise, machinist's
Wrench, open-end, 1/2-inch
Wrench, open-end, 5/8-inch
Wrench, open-end, 11/16-inch
Wrench, open-end, 3/4-inch
Wrench, open-end, 1-inch

Materials/Parts

Tape, teflon (item 20, appendix E)

Personnel Required

One

Equipment Condition

Air reservoir drained (page 2-13).

LOCATION	ITEM	ACTION **REMARKS**
REMOVAL		
1. Master cylinder body (1)	Drainplug (2) and gasket (3)	a. Place drain pan under drainplug (2). b. Using 3/4-inch open-end wrench, unscrew, take out, and let drain.
2. Adapter (4)	Nut (5)	Using 1/2-inch and 5/8-inch open-end wrenches, unscrew and take off.
3. Master cylinder body (1)	Adapter (4) and gasket (6)	Using 5/8-inch open-end wrench, unscrew and take off.
4. Master cylinder body (1) and bracket studs (7)	Three nuts (8) and lockwashers (9)	Using 9/16-inch socket, 5-inch extension, and ratchet handle with 1/2-inch drive, unscrew and take off.
5. Bracket studs (7)	Master cylinder body (1)	a. Take off. b. Put in vise equipped with jaw caps.
6. Boot (10)	Collar (11) and strap (12)	Take off.

MASTER CYLINDER - CONTINUED

LOCATION	ITEM	ACTION **REMARKS**
REMOVAL - CONTINUED		
7. Vent tube (13) and filler cap (14)	Fitting (15)	Using 5/8-inch and l-inch open-end wrenches, unscrew and take off.
8. Clamp loop (16)	Screw (17)	Using 3/16-inch flat-tip screwdriver, unscrew and take off.
9. Vent hose (18)	Clamp loop (16)	Using 3/16-inch flat-tip screwdriver, pry loose.
10. Vent tube (13)	Vent hose (18) with clamp loop (16)	Take off.
11. Vent hose (18)	Clamp loop (16)	Take off.
12. Master cylinder body (1)	Filler cap (14) and spacer ring (19)	a. Using 1-inch open-end wrench, unscrew and take off. b. Take master cylinder body (1) out of vise.
INSTALLATION		
13.	Drainplug (2) and gasket (3)	a. Put master cylinder body (1) in vise. b. Screw in, and tighten using 3/4-inch open-end wrench.

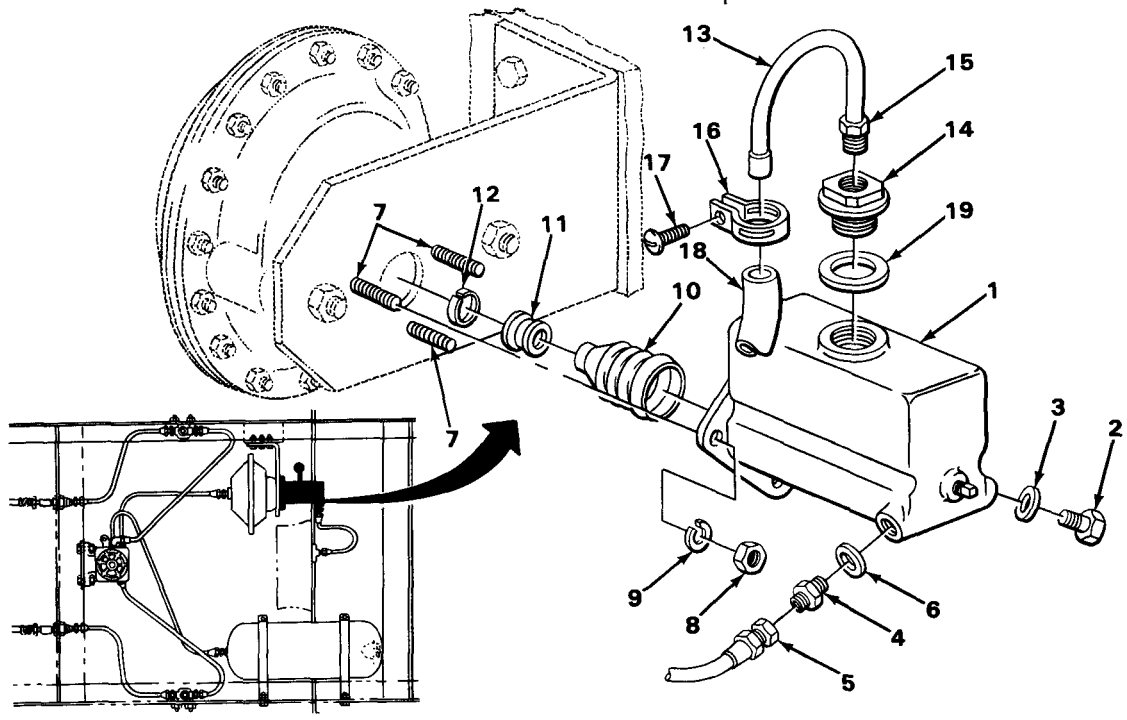

TA231275

MASTER CYLINDER - CONTINUED

LOCATION	ITEM	ACTION **REMARKS**
INSTALLATION - CONTINUED		
14. Master cylinder body (1)	Filler cap (2) and spacer ring (3)	Screw in, and tighten using 1-inch open-end wrench.
15. Vent hose (4)	Clamp loop (5)	Put in place.
16. Vent tube (6)	Vent hose (4) with clamp loop (5)	Put in place.
17. Clamp loop (5)	Screw (7)	Screw in, and tighten using 3/16-inch flat-tip screwdriver.
18. Vent tube (6) and filler cap (2)	Fitting (8)	Screw in, and tighten using 5/8-inch and 1-inch open-end wrenches.
19.	Master cylinder body (1)	Take out of vise equipped with jaw caps.
20. Master cylinder (1)	Boot (9), collar (10), and strap (11)	Put in place.
21. Bracket studs (12)	Master cylinder body (1)	Put on.
22. Master cylinder body (1) and bracket studs (12)	Three lock-washers (13) and nuts (14)	Screw in, and tighten using 9/16-inch socket, 5-inch extension, and ratchet handle with 1/2-inch drive.
23. Master cylinder body (1)	Adapter (15) and gasket (16)	a. Wrap threads clockwise two turns with teflon tape. b. Screw in, and tighten using 11/16-inch open-end wrench.
24. Adapter (15)	Nut (17)	a. Screw in, and tighten using 1/2-inch and 5/8-inch open-end wrenches. b. Take drain pan out.

MASTER CYLINDER - CONTINUED

INSTALLATION - CONTINUED

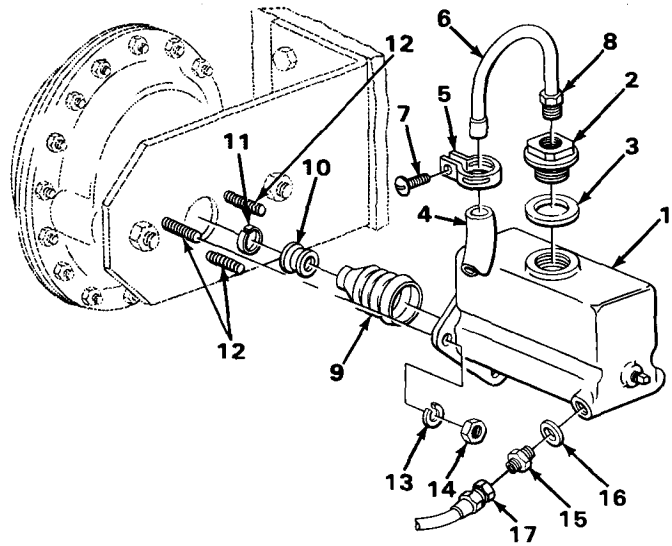

NOTE

FOLLOW-ON MAINTENANCE:

1. Bleed brake system (page 4-98).
2. Test operation of brakes (page 2-23).

TASK ENDS HERE

WHEEL CYLINDERS, TWO-WHEEL CYLINDER BRAKES

This task covers:

a. Removal (page 4-104)
b. Installation (page 4-104)

INITIAL SETUP

Tools

Handle, ratchet, 1/2-inch drive
Pan, drain
Socket, 1/2-inch drive, 1/2-inch
Wrench, box-end, 7/16-inch
Wrench, box-end, 11/16-inch
Wrench, open-end, 3/4-inch

Materials/Parts

Tape, teflon (item 20, appendix E)

Personnel Required

One

Equipment Condition

Brakeshoes removed (page 4-84).

TA231276

WHEEL CYLINDERS, TWO-WHEEL CYLINDER BRAKES - CONTINUED

LOCATION	ITEM	ACTION **REMARKS**
REMOVAL		
	NOTE Both sets of wheel cylinders are removed and installed the same way. This task is for one set; repeat for the other.	
1. Fitting (1)	Bolt (2)	a. Put drain pan under. b. Using 11/16-inch box-end wrench, unscrew part way.
2. Top wheel cylinder (3) and connection (4)	Fitting (1) with gasket (5)	Using 3/4-inch open-end wrench, unscrew and take out.
3. Bottom wheel cylinder (6) and connection (7)	Bolt (8) with gasket (9)	Using 11/16-inch box-end wrench, unscrew and take out.
4. Two wheel cylinders (6) and (3)	Two bleeder screws (10)	Using 7/16-inch box-end wrench, unscrew and take out.
5. Two wheel cylinders (6) and (3) and backing plate (11)	Four screws (12) and lockwashers (13)	Using 1/2-inch socket and ratchet handle with 1/2-inch drive, unscrew and take off.
6. Backing plate (11)	Two wheel cylinders (6) and (3) shields (14)	Take off and separate.
INSTALLATION		
7.	Two shields (14) and wheel cylinders (6) and (3)	Put in place.
8. Two wheel cylinders (6), and (3), and backing plate (11)	Four lock-washers (13) screws (12)	Screw in, and tighten using 1/2-inch socket and ratchet handle with 1/2-inch drive.
9. Two wheel cylinders (6) and (3)	Two bleeder screws (10)	Screw in, and tighten using 7/16-inch box-end wrench.

WHEEL CYLINDERS, TWO-WHEEL CYLINDER BRAKES - CONTINUED

LOCATION	ITEM	ACTION **REMARKS**
INSTALLATION - CONTINUED		
10. Wheel cylinder (6) and connection (7)	Bolt (8) with gasket (9)	a. Wrap threads clockwise two turns with teflon tape. b. Screw in, and tighten using 11/16-inch box-end wrench.
11. Top wheel cylinder (3) and connection (4)	Fitting (1) with gasket (5)	a. Wrap threads clockwise two turns with teflon tape. b. Screw in, and tighten using 3/4-inch open-end wrench.
12. Fitting (1)	Bolt (2)	a. Screw in, and tighten using 11/16-inch box-end wrench. b. Take out drain pan.

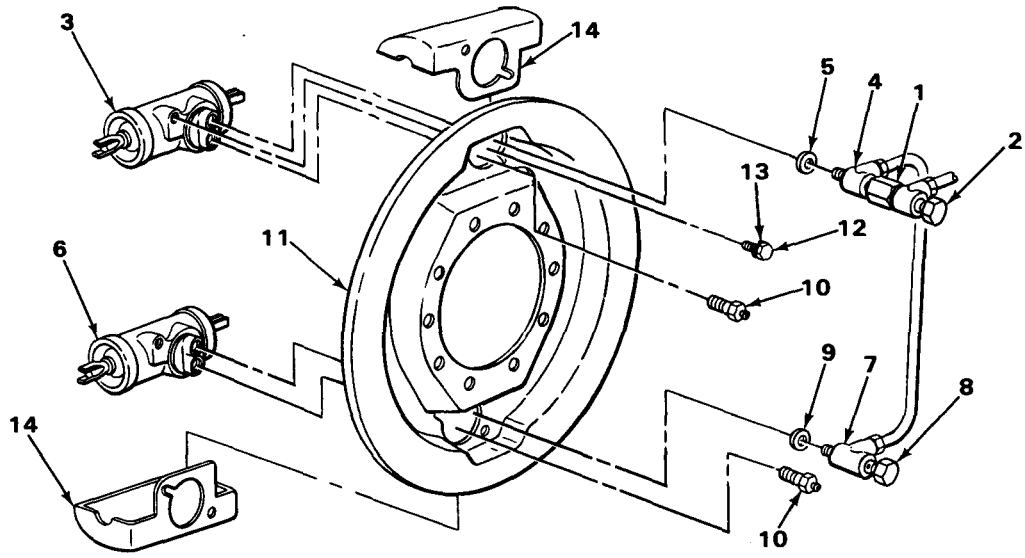

NOTE

FOLLOW-ON MAINTENANCE:

1. Install brakeshoes (page 4-84).
2. Bleed brake system (page 4-98).
3. Test operation of brakes (page 2-23).

TASK ENDS HERE

TA231277

WHEELS CYLINDERS, ONE-WHEEL CYLINDER OPTION BRAKES

This task covers:

a. Removal (page 4-106)
b. Installation (page 4-106)

INITIAL SETUP

Tools

Handle, ratchet, 1/2-inch drive
Pan, drain
Socket, 1/2-inch drive, 9/16-inch
Wrench, box-end, 7/16-inch
Wrench, box-end, 3/4-inch

Materials/Parts

Tape, teflon (item 20, appendix E)

Personnel Required

One

Equipment Condition

Brakeshoes removed (page 4-88).

LOCATION	ITEM	ACTION **REMARKS**
REMOVAL		
	NOTE	
	Both sets of wheel cylinders are removed and installed the same way. This task is for one set; repeat for the other. Have drain pan ready to catch hydraulic fluid spillage.	
1. Wheel cylinder (1)	Bolt (2) and connector (3)	a. Put drain pan under. b. Using 3/4-inch box-end wrench, unscrew and take off.
2. Wheel cylinder (1)	Bleeder screw (4)	Using 7/16-inch box-end wrench, unscrew and take out.
3. Backing plate (5) and wheel cylinder (1)	Two screws (6) and lockwashers (7)	Using 9/16-inch socket and ratchet handle with 1/2-inch drive, unscrew and take out.
4. Backing plate (5)	Wheel cylinder (1) and shield (8)	Take off.
INSTALLATION		
5.	Shield (8) and wheel cylinder (1)	Put in place

WHEEL CYLINDERS, ONE-WHEEL CYLINDER OPTION BRAKES - CONTINUED

LOCATION	ITEM	ACTION **REMARKS**
INSTALLATION - CONTINUED		
6. Backing plate (5) and wheel cylinder (1)	Two lockwashers (7) and screws (6)	Screw in, and tighten using 9/16-inch socket and ratchet handle with 1/2-inch drive.
7. Wheel cylinder (1)	Bleeder screw (4)	a. Wrap threads clockwise two turns with teflon tape. b. Screw in, and tighten using 7/16-inch box-end wrench.
8. Wheel cylinder (1)	Bolt (2) and connector (3)	a. Wrap threads clockwise two turns with teflon tape. b. Screw in, and tighten using 3/4-inch box-end wrench. c. Take drain pan out.

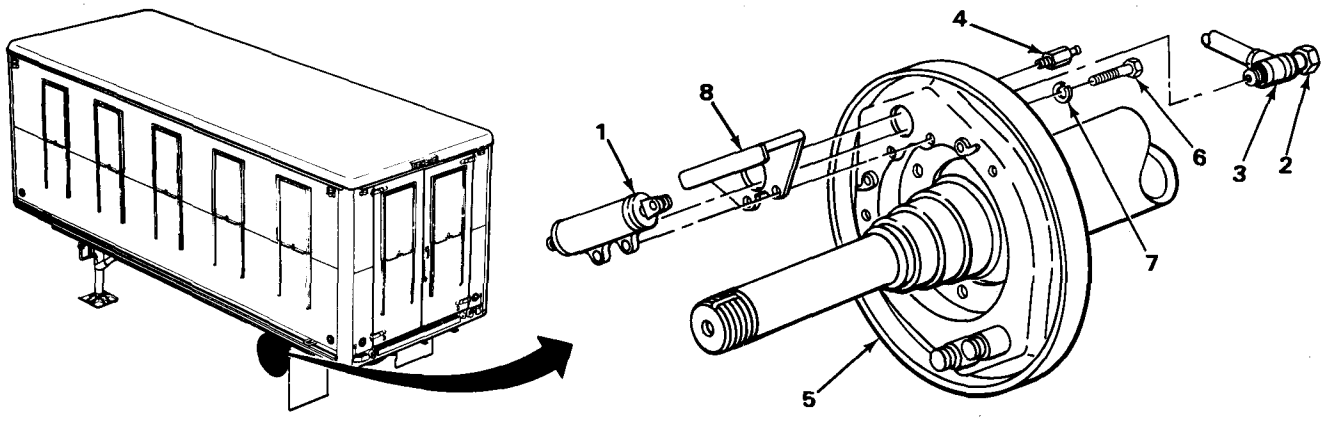

NOTE

FOLLOW-ON MAINTENANCE:

1. Install brakeshoes (page 4-88).
2. Bleed brake system (page 4-98).
3. Test operation of brakes (page 2-23).

TASK ENDS HERE

TA231278

HYDRAULIC TUBES AND FITTINGS

This task covers:

a. Removal (page 4-108)
b. Installation (page 4-111)

INITIAL SETUP

Tools

Chisel, cold, hand, 1/2-inch
Handle, ratchet, 1/2-inch drive
Socket, 1/2-inch drive, 1/2-inch
Hammer, hand, ball-peen, 2-lb
Pan, drain
Wrench, box-end, 11/16-inch
Wrench, box-end, 3/4-inch
Wrench, open-end, 9/16-inch
Wrench, open-end, 5/8-inch

Tools - Continued

Wrench, open-end box, 7/16-inch
Wrench, open-end box, 5/8-inch
Wrench, open-end box, 1/2-inch

Personnel Required
One

Equipment Condition

Air reservoir drained (page 2-13).

LOCATION	ITEM	ACTION **REMARKS**

NOTE

Hydraulic tubes and fittings for two-wheel cylinder and one-wheel cylinder options are removed and installed the same. This task is for two-wheel cylinder brakes; repeat for the one-wheel cylinder option.

REMOVAL

1. Adapter (1)	Nut (2)	a. Place drain pan underneath. b. Using 5/8-inch open-end wrench and 1/2-inch open-end box wrench, unscrew, and take off.
2. Master cylinder (3)	Adapter (1) and gasket (4)	Using 11/16-inch box-end wrench, unscrew and take off.
3. Tee (5)	Nut (6) and hose (7)	Using 5/8-inch open-end box wrench, unscrew and take off.
4.	Two nuts (8)	Using 7/16-inch open-end box wrench, unscrew and take off.

HYDRAULIC TUBES AND FITTINGS - CONTINUED

LOCATION	ITEM	ACTION **REMARKS**
REMOVAL - CONTINUED		
5. Tee (5) and stud (9)	Nut (10)	Using 1/2-inch socket and ratchet handle with 1/2-inch drive, unscrew and take off.
6. Stud (9)	Tee (5)	Take off.

NOTE

For one-wheel cylinder option, bolt (11) screws into wheel cylinder (12) on the top of backing plate.

7. Fitting (13)	Bolt (11) with gasket (14)	Using 11/16-inch box-end wrench, unscrew and take off.
8. Bolt (11) and connection (15)	Gasket (14)	Take off.
9. Connection (15)	Bolt (11) with gasket (16)	Take off.
10. Bolt (11)	Gasket (16)	Take off.

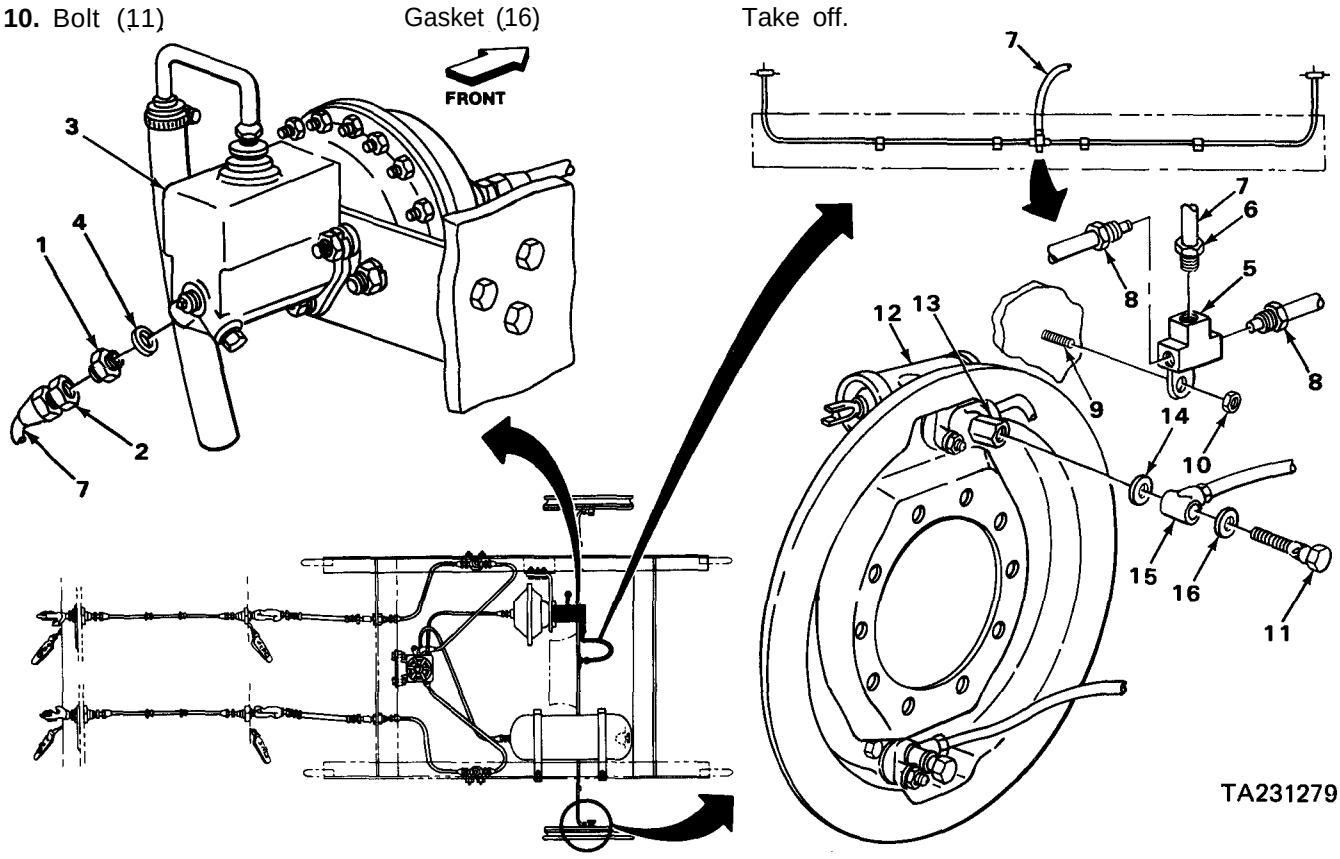

HYDRAULIC TUBES AND FITTINGS - CONTINUED

LOCATION	ITEM	ACTION **REMARKS**
REMOVAL - CONTINUED		
11. Axle(1) and left tube (2)	Two clamps (3)	Using ball-peen hammer and 1/2-inch hand cold chisel, bend back.
12. Axle(1) and two clamps (3)	Left tube (2)	Take off.
13. Nut (4)	Connection (5)	Using 7/16-inch open-end box and 9/16-inch open-end wrenches, unscrew and take off.

NOTE

If working on one-wheel cylinder option, go to step 34.

14. Left top wheel cylinder (6)	Fitting (7) with gasket (8)	Using 3/4-inch box-end wrench, unscrew and take off.
15. Fitting (7) and connection (9)	Gasket (8)	Take off.
16. Connection (9)	Fitting (7) with gasket (10)	Take off.
17. Fitting (7)	Gasket (10)	Take off.
18. Left bottom wheel cylinder (11)	Bolt (12) with gasket (13)	Using 11/16-inch box-end wrench, unscrew and take off.
19. Bolt (12) and connection (14)	Gasket (13)	Take off.
20. Connection (14)	Bolt (12) with gasket (15)	Take off.
21. Bolt (12)	Gasket (15)	Take off.
22. Backing plate (16)	Tube (17) with nuts (18)	Take off.
23. Two nuts (18)	Two connections (9) and (14)	a. Using 7/16-inch open-end box and 9/16-inch open-end wrenches, unscrew and take off. b. Repeat steps 7 thru 23a for right side.

HYDRAULIC TUBES AND FITTINGS - CONTINUED

LOCATION	ITEM	ACTION **REMARKS**
INSTALLATION		
24. Tube (17) with two nuts (18)	Two connections (9) and (14)	Screw in, and tighten using 7/16-inch open-end box and 9/16-inch open-end wrenches.
25. Backing plate (16)	Tube (17) with nuts (18)	Put in place.
26. Bolt (12)	Gasket (15)	Put in place.
27. Connection (14)	Bolt (12) with gasket (15)	Put in place.
28. Bolt (12) and connection (14)	Gasket (13)	Put in place.
29. Left bottom wheel cylinder (11)	Bolt (12) with gasket (13)	Screw in, and tighten using 11/16-inch box-end wrench.
30. Fitting (7)	Gasket (10)	Put in place.

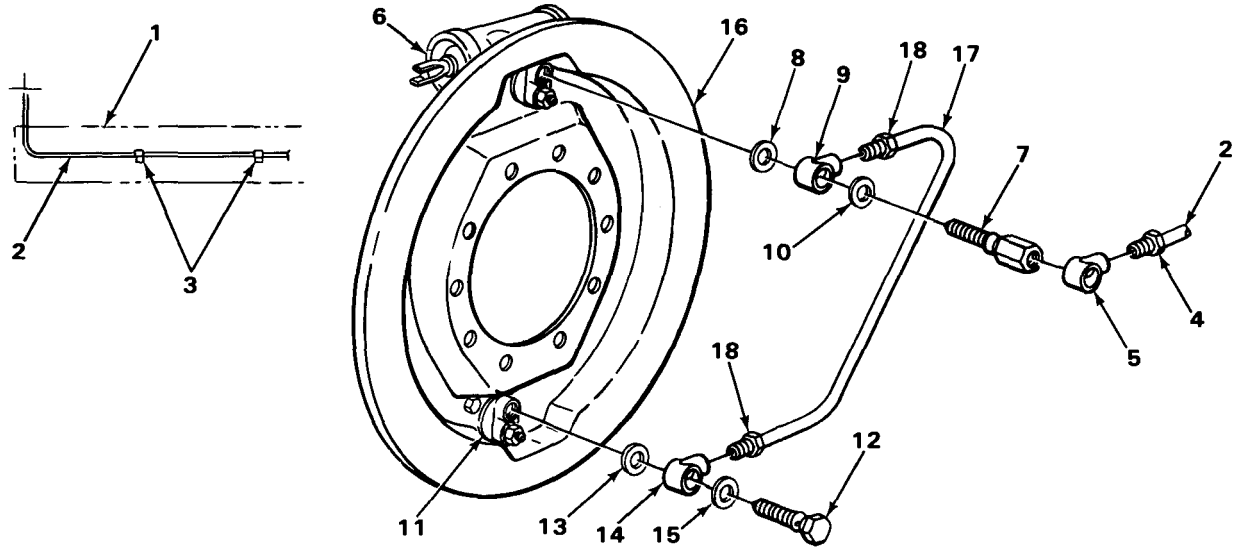

TA231280

HYDRAULIC TUBES AND FITTINGS - CONTINUED

LOCATION	ITEM	ACTION **REMARKS**
INSTALLATION - CONTINUED		
31. Connection (1)	Fitting (2) with gasket (3)	Put in place.
32. Fitting (2) and connection (1)	Gasket (4)	Put in place.
33. Left top wheel cylinder (5)	Fitting (2) and gasket (4)	Screw in, and tighten using 3/4-inch box-end wrench.
34. Nut (6)	Connection (7)	Screw in, and tighten using 7/16-inch open-end box and 9/16-inch open-end wrenches.
35. Axle (8) and two clamps (9)	Left tube (10)	Put in place.
36. Bott (11)	Gasket (12)	Put in place.
37. Connection (7)	Bolt (11) with gasket (12)	Put in place.
38. Bolt (11) and connection (7)	Gasket (13)	Put in place.

NOTE

For the one-wheel cylinder option, bolt (11) screws into the wheel cylinder on the top of the backing plate.

39. Fitting (2)	Bolt (11) with gasket (13)	Screw in, and tighten using 11/16-inch box-end wrench.
40. Stud (14)	Tee (15)	Put on.
41. Tee (15) and stud (14)	Nut (16)	Screw in, and tighten using 1/2-inch socket and ratchet handle with 1/2-inch drive.
42. Tee (15)	Two nuts (17)	Screw in, and tighten using 7/16-inch open-end box wrench.
43. Axle (8) and left tube (10)	Two clamps (9)	Using ball-peen hammer, tap into place.

HYDRAULIC TUBES AND FITTINGS - CONTINUED

LOCATION	ITEM	ACTION **REMARKS**
INSTALLATION - CONTINUED		
44. Tee (15)	Nut (18) and hose (19)	Screw in, and tighten using 5/8-inch open-end box wrench.
45. Master cylinder (20)	Adapter (21) and gasket (22)	Screw in, and tighten using 11/16-inch box-end wrench.
46. Adapter (21)	Nut (23)	a. Screw in, and tighen using 5/8-inch open-end and 1/2-inch open-end box wrenches. b. Remove drain pan.

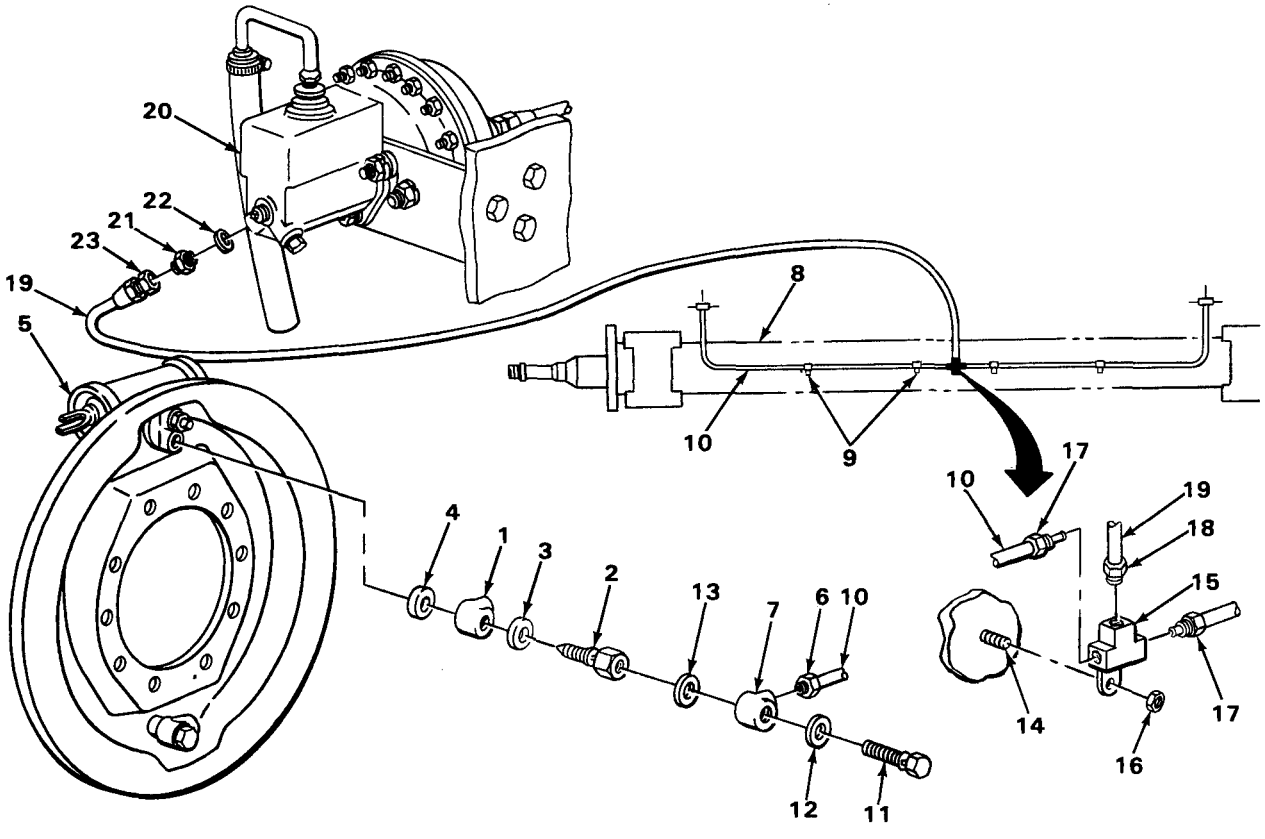

NOTE

FOLLOW-ON MAINTENANCE:

1. Bleed brake system (page 4-98).
2. Test operation of brakes (page 2-23).

TASK ENDS HERE

TA231281

AIRBRAKE CHAMBER

This task covers:

a. Removal (page 4-114)
b. Installation (page 4-115)

INITIAL SETUP

Tools

Extension, 1/2-inch drive, 5-inch
Handle, ratchet, 1/2-inch drive
Socket, 1/2-inch drive, 9/16-inch
Socket, 1/2-inch drive, 15/16-inch
Wrench, box-end, 9/16-inch
Wrench, open-end, 9/16-inch
Wrench, open-end box, 5/6-inch

Materials/Parts

Tape, teflon (item 20, appendix E)

Personnel Required

One

Equipment Condition

Air reservoir drained (page 2-13).

LOCATION	ITEM	ACTION **REMARKS**
REMOVAL		
1. Master cylinder body (1) and bracket studs (2)	Three nuts (3) and lockwashers (4)	Using 9/16-inch socket, extension, and ratchet handle with 1/2-inch drive, unscrew and take off.
2. Bracket studs (2)	Master cylinder body (1)	a. Take off. b. Set aside.
3. Adapter (5)	Nut (6)	Using 5/8-inch open-end box and 9/16-inch open-end wrenches, unscrew and take off.

AIRBRAKE CHAMBER - CONTINUED

LOCATION	ITEM	ACTION **REMARKS**
REMOVAL- CONTINUED		
4. Air chamber (7)	Adapter (5)	Using 9/16-inch box-end wrench, unscrew and take out.
5. Air chamber studs (8) and bracket (9)	Two nuts (10) and lockwashers (11)	Using 15/16-inch socket and ratchet handle with 1/2-inch drive, unscrew and take off.
6. Bracket (9)	Air chamber (7)	Take off.
7. Bracket (9) and frame (12)	Three screws (13), lockwashers (14), and nuts (15)	Using 9/16-inch open-end wrench, 9/16-inch socket, and handle with 1/2-inch drive, unscrew and take off.
8. Frame (12)	Bracket (9)	Take off.
INSTALLATION		
9.	Bracket (9)	Put in place.
10. Bracket (9) and frame (12)	Three lockwashers (14), screws (13), and nuts (15)	Screw in, and tighten using 9/16-inch open-end wrench, 9/16-inch socket, and ratchet handle with 1/2-inch drive.

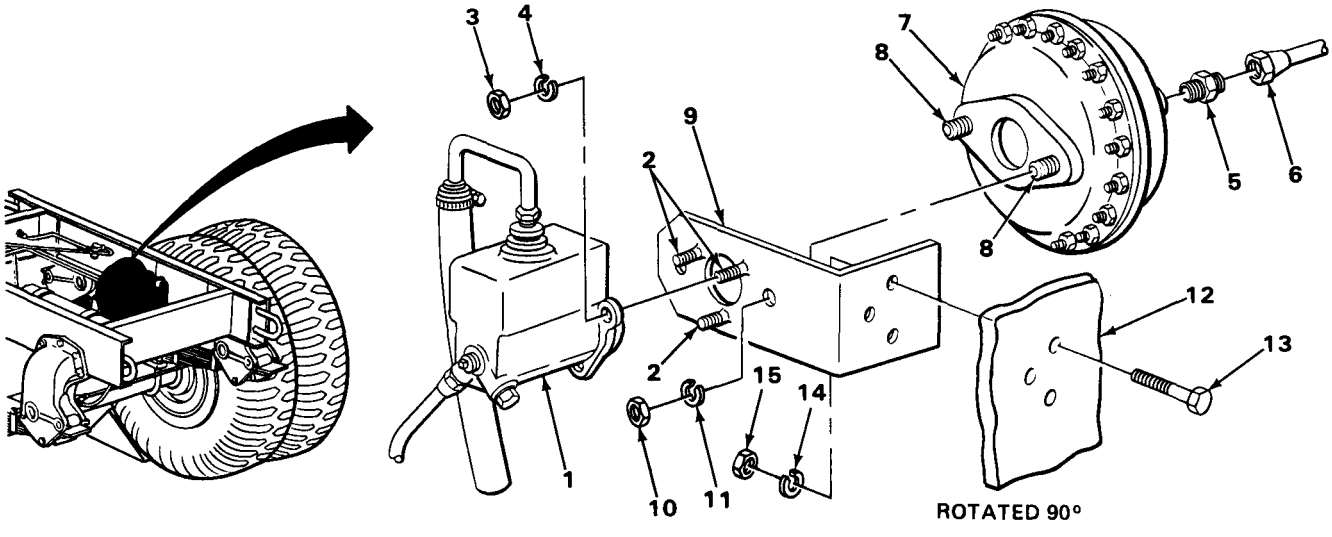

TA231282

AIRBRAKE CHAMBER - CONTINUED

LOCATION	ITEM	ACTION **REMARKS**
INSTALLATION - CONTINUED		
11. Bracket (1)	Air chamber (2)	Put in place.
12. Air chamber studs (3) and bracket (1)	Two lockwashers (4) and nuts (5)	Screw in, and tighten using 15/16-inch socket and ratchet handle with 1/2-inch drive.
13. Air chamber (2)	Adapter (6)	a. Wrap threads clockwise two turns with teflon tape. b. Screw in, and tighten using 9/16-inch box-end wrench.
14. Adapter (6)	Nut (7)	Screw in, and tighten using 5/8-inch open-end box and 9/16-inch open-end wrenches.
15. Bracket studs (8)	Master cylinder body (9)	Put in place.
16. Master cylinder body (9) and bracket studs (8)	Three lockwashers (10) and nuts (11)	Screw in, and tighten using 9/16-inch socket, extension, and ratchet handle with 1/2-inch drive.

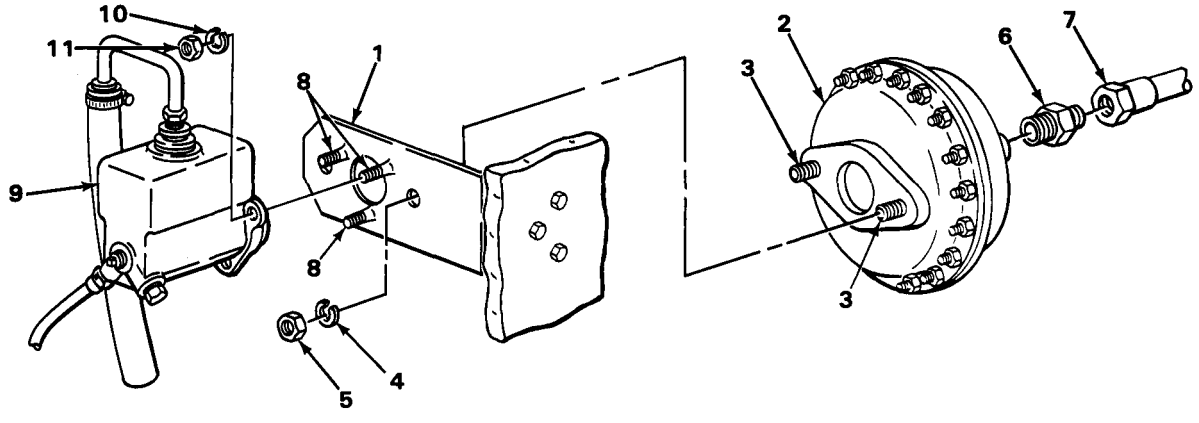

NOTE

FOLLOW-ON MAINTENANCE:

1. Check for air leaks (page 2-13).
2. Test operation of brakes (page 2-23).

TASK ENDS HERE

TA231283

AIR LINES AND FITTINGS

This task covers:

a: Removal (page 4-118)
b. Installation (page 4-120)

INITIAL SETUP

Tools

Bar, pry
Hammer, hand, ball-peen, 2-lb
Pliers, long round-nose
Screwdriver, cross-tip, number two
Screwdriver, flat-tip, 3/16-inch
Wrench, box-end, 1/2-inch
Wrench, box-end, 9/16-inch
Wrench, box-end, 11/4-inch
Wrench, box-end, 11/2-inch
Wrench, open-end, 9/16-inch
Wrench, open-end, 11/16-inch
Wrench, open-end, 7/8-inch
Wrench, open-end, 1-inch
Wrench, open-end, 11/16-inch
Wrench, open-end box, 5/8-inch
Wrench, pipe, 18-inch

Materials/Parts

Tape, teflon (item 20, appendix E)

Personnel Required

Two

Equipment Condition

Air reservoir drained (page 2-13).

LOCATION	ITEM	ACTION	**REMARKS**

NOTE

New air tubing is manufactured to required length from bulk items. For information on manufacturing new tubing, go to appendix G.

Both lines are removed the same way. This task is for one; repeat for the other.

AIR LINES AND FITTINGS

LOCATION	ITEM	ACTION **REMARKS**
REMOVAL		
1. Two moldings (1) and paneling (2)	20 screws (3)	Using number two cross-tip screwdriver, unscrew and take off.
2. Paneling (2)	Two moldings (1)	Take off.
3. Five planks (4), crossmember (5), and frame bracket (6)	18 screws (7) and nuts (8)	With aid of assistant, using 3/16-inch flat-tip screwdriver and 1/2-inch box-end wrench, unscrew and take off.
4. Six planks (9), crossmember (5), and frame bracket (6)	24 screws (10)	Using number two cross-tip screwdriver, unscrew and take off.
5. Crossmember (5) and frame bracket (6)	Five planks (4) and six planks (9)	Starting at far right side, using pry bar, pry boards apart and take off.

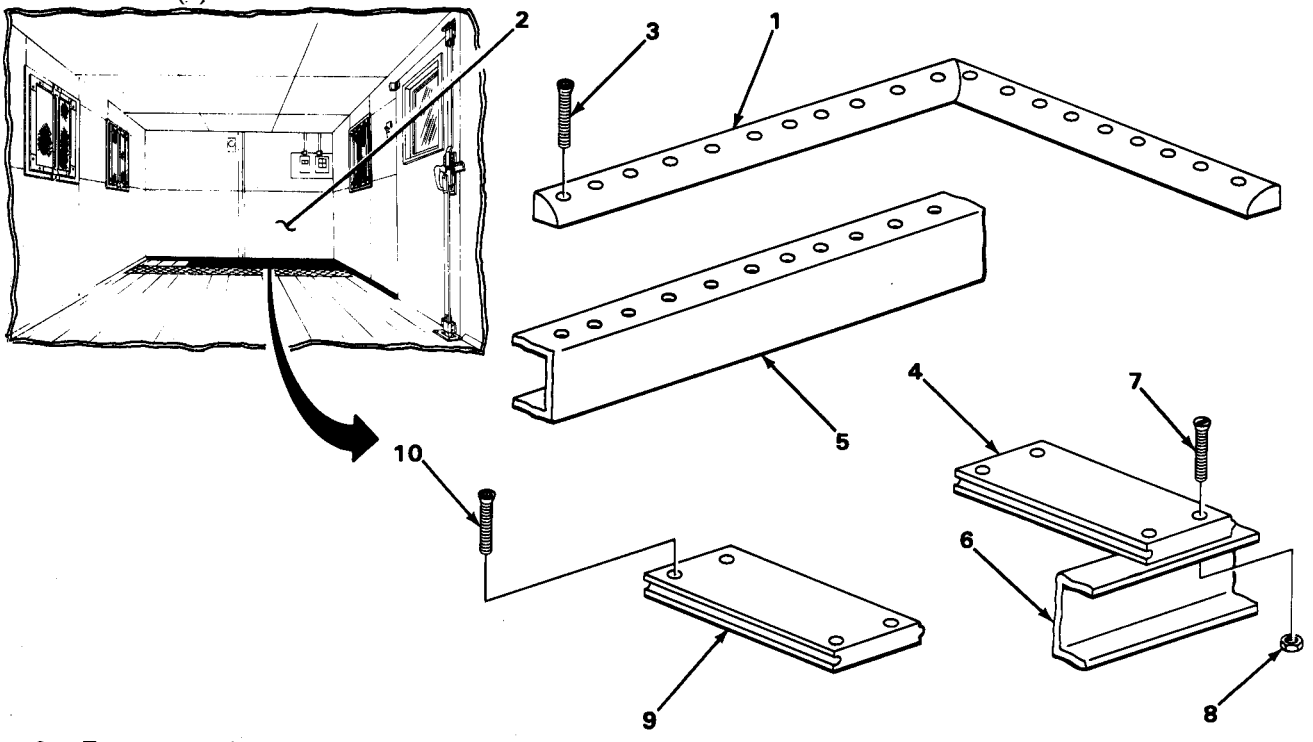

6. Frame members (11) and air line (12)	10 grommets (13)	Using long round-nose pliers, pull out.

TA231284

AIR LINES AND FITTINGS - CONTINUED

LOCATION	ITEM	ACTION **REMARKS**
REMOVAL - CONTINUED		
7. Two adapters (14)	Two nuts (15)	Using 5/8-inch open-end box wrench and 9/16-inch open-end wrench, unscrew and take off.
8. Two nipple pipes (16)	Two adapters (14)	Using 9/16-inch box end wrench, unscrew and take off.
9. Frame members (11)	Air line (12)	Pull out.
10. Coupling (17) and hose assembly (18)	Coupling (19)	Twist, and disconnect from coupling (17).
11. Adapter (20)	Coupling (19)	Using 11/8-inch and 1-inch open-end wrenches, unscrew and take off.
12. Pipe coupling (21) and hose assembly (18)	Adapter (22)	a. Using 1-inch open-end wrench and 18-inch pipe wrench, unscrew. b. Take off hose assembly (18). c. Using 1-inch and 11/16-inch open-end wrenches, unscrew from hose assembly (18).
13. Nipple pipe (23)	Pipe coupling (21)	Using 18-inch pipe wrench and 11/4-inch open-end wrench, unscrew and take off.

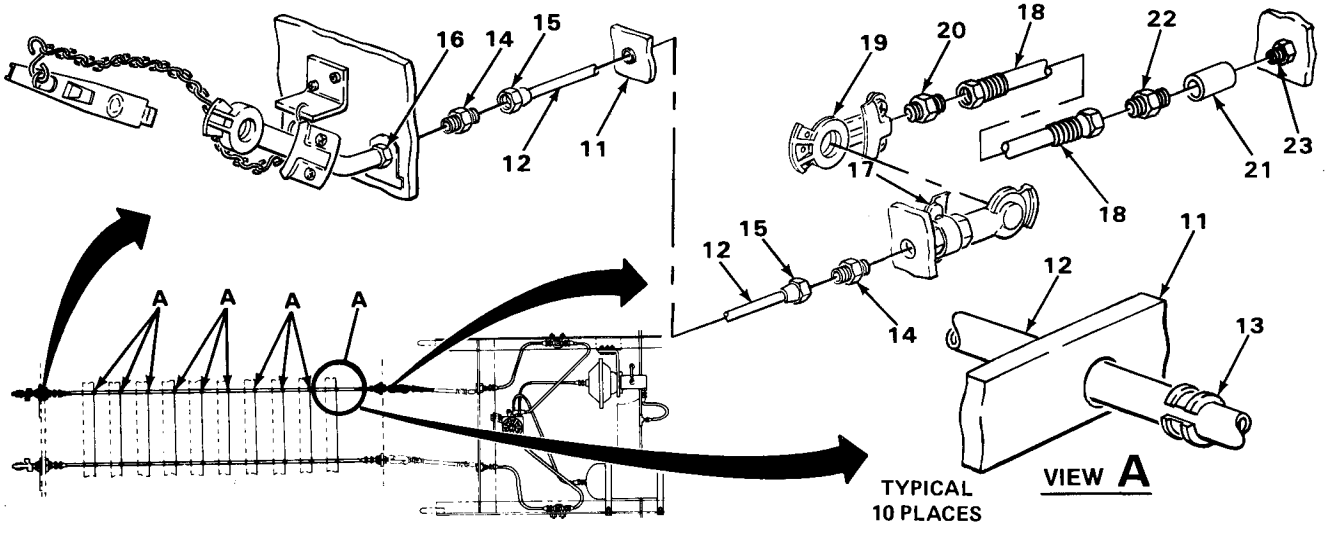

TA231285

AIR LINES AND FITTINGS - CONTINUED

LOCATION	ITEM	ACTION **REMARKS**
REMOVAL - CONTINUED		
	NOTE If removing left air line, the wrenches for air line from emergency relay valve to air reservoir are 7/8-inch open-end box and 11/16-inch open-end wrenches.	
14. Three air lines (1) and five adapters (2)	Five nuts (3)	Using 5/8-inch open-end box wrench and 9/16-inch open-end wrench, unscrew and take off.
15. Elbow (4)	Nut (5)	Using 5/8-inch open-end box wrench and 1/2-inch open-end wrench, unscrew and take off.
16. Five adapters (2) and elbow (4)	Three air lines (1)	Take off.
17. Adapter (6), air filter (7), air chamber (8), and relay valve (9)	Five adapters (2)	Using 9/16-inch box-end wrench, unscrew and take off.
18. Relay valve (9)	Elbow (4)	Using 1/2-inch open-end wrench, unscrew and take off.
19. Adapter (6) and frame member (10)	Nut (11), Iockwasher (12), and tag (13)	a. Using 11/4-inch and 11/2-inch box-end wrenches, unscrew and take apart. b. Remove adapter (6) and tag (13) from frame member (10).
INSTALLATION		
	NOTE New air tubing is manufactured to required length from bulk items. For information on manufacturing new tubing, go to appendix G.	
20. Adapter (6) and frame member (10)	Tag (13), Iockwasher (12), and nut (11)	a. Put tag (13) and adapter (6) in place in frame member (10). b. Screw Iockwasher (12) and nut (11) in, and tighten using 11/4-inch and 11/2-inch box-end wrenches.

AIR LINES AND FITTINGS - CONTINUED

LOCATION	ITEM	ACTION **REMARKS**
INSTALLATION - CONTINUED		
	NOTE	
	If installing left air line, the wrenches for air line from emergency relay valve to air reservoir are 7/8-inch open-end box and 11/16-inch open-end wrenches.	
21. Relay valve (9)	Elbow (4)	a. Wrap threads clockwise two turns with teflon tape. b. Screw in, and tighten using 1/2-inch open-end wrench.
22. Adapter (6), air filter (7), air chamber (8), and relay valve (9)	Five adapters (2)	a. Wrap threads clockwise two turns with teflon tape. b. Screw in, and tighten using 9/16-inch box-end wrench.
23. Five adapters (2) and elbow (4)	Three air lines (1)	Put in place.
24. Three air lines (1) and five adapters (2)	Five nuts (3)	Screw in, and tighten using 5/8-inch open-end box wrench and 9/16-inch open-end wrench.
25. Elbow (4)	Nut (5)	Screw in, and tighten using 5/8-inch open-end box wrench and 1/2-inch open-end wrench.

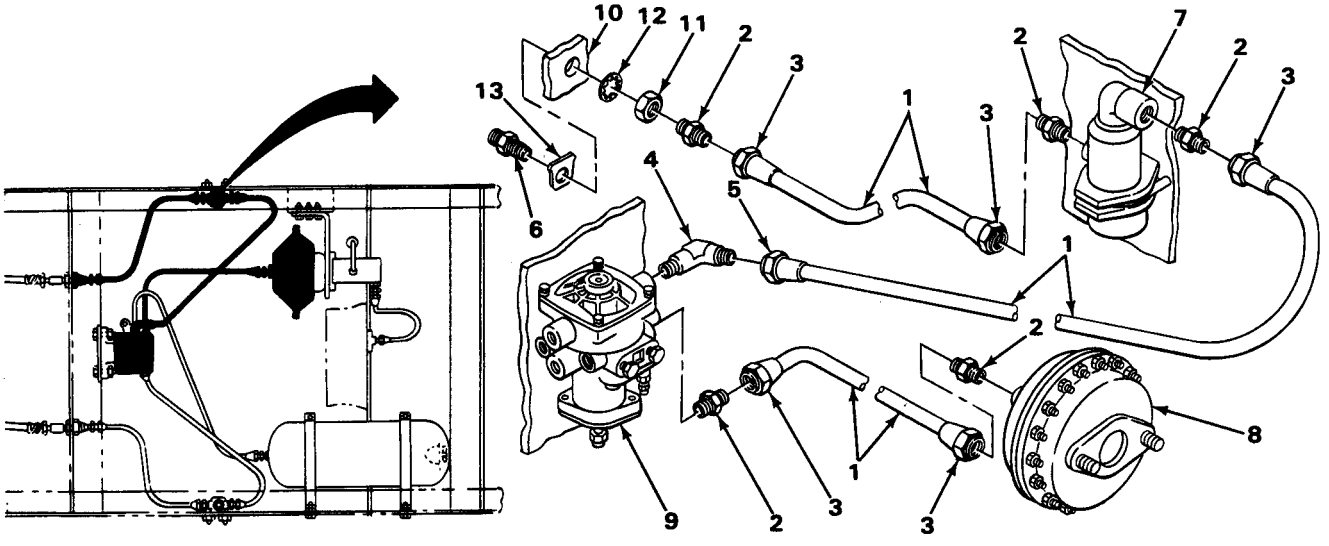

TA231286

AIR LINES AND FITTINGS - CONTINUED

LOCATION	ITEM	ACTION **REMARKS**
INSTALLATION - CONTINUED		
26. Adapter (1)	Pipe coupling (2)	Screw in, and tighten using 18-inch pipe wrench and 11/4-inch open-end wrench.
27. Hose assembly (3)	Adapters (4) and (5)	a. Screw onto hose assembly (3) using 1-inch and 11/16-inch open-end wrenches. b. Put hose assembly (3) in place. c. Screw in, and tighten using 1-inch open-end wrench and 18-inch pipe wrench.
28. Adapter (5)	Coupling (6)	Screw in, and tighten using 11/8-inch and 1-inch open-end wrenches.
29. Coupling (7)	Coupling (6) and hose assembly (3)	Twist onto coupling (7).
30. Frame members (8)	Air line (9)	Feed through.
31. Two nipple pipes (10)	Two adapters (11)	a. Wrap threads clockwise two turns with teflon tape. b. Screw in, and tighten using 9/16-inch box-end wrench.
32. Two adapters (11)	Two nuts (12)	Screw in, and tighten using 5/8-inch open-end box wrench and 9/16-inch open-end wrench.
33. Frame members (8) and air line (9)	Ten grommets (13)	a. Slip over air line (9). b. Push into place.

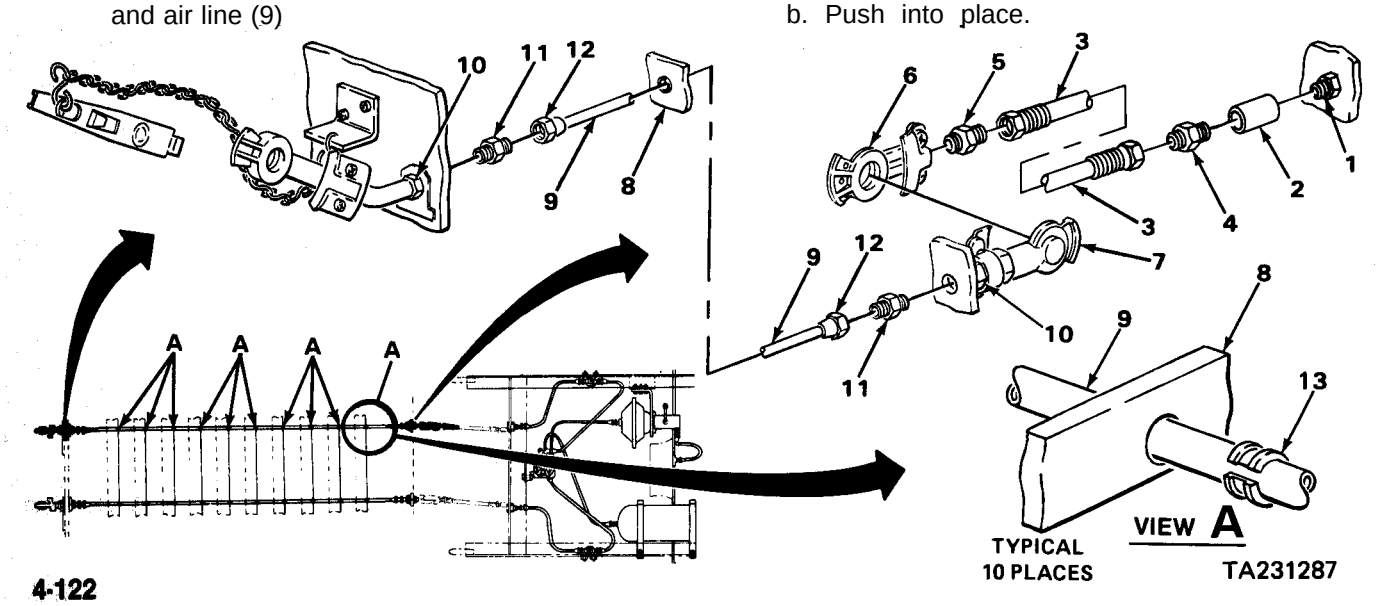

AIR LINES AND FITTINGS - CONTINUED

LOCATION	ITEM	ACTION **REMARKS**
INSTALLATION - CONTINUED		
34.	Six planks (14) and five planks (15)	Starting at far right side, tap boards in place using ball-peen hammer.
35. Six planks (14), crossmember (16), and frame bracket (17)	24 screws (18)	Screw in, and tighten using number two cross-tip screwdriver.
36. Five planks (15), crossmember (16), and frame bracket (17)	18 screws (19) and nuts (20)	With aid of assistant, screw in, and tighten using 3/16-inch flat-tip screwdriver and 1/2-inch box-end wrench.
37. Paneling (21)	Two moldings (22)	Put in place.
38. Two moldings (22)	20 screws (23)	Screw in, and tighten using number two cross-tip screwdriver.

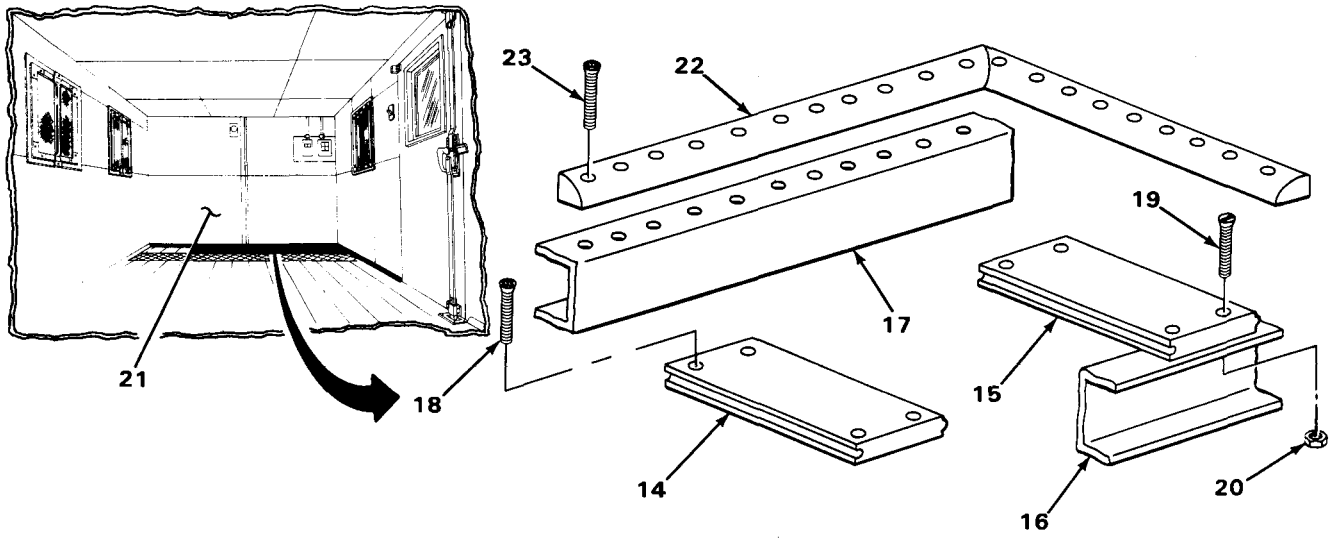

NOTE

FOLLOW-ON MAINTENANCE:

1. Check for air leaks (page 2-13).
2. Test operation of brakes (page 2-23).

TASK ENDS HERE

TA231288

AIR LINE REPAIR

This task covers:

Repair (page 4-124)

INITIAL SETUP

Tools

Cutter, tube, heavy duty
Pliers, long round-nose
Reamer, tube, inner and outer
Wrench, adjustable, 8-inch
Wrench, box-end, 9/16-inch
Wrench, open-end, 9/16-inch
Wrench, open-end box, 5/8-inch

Materials/Parts

Adapter (appendix G)
Coupling, pipe (appendix G)

Materials/Parts - Continued

Nuts (appendix G)
Sleeves (appendix G)
Tape, teflon (item 20, appendix E)
Tubing, copper, (as required) (appendix G)

Personnel Required

One

Equipment Condition

Air reservoir drained (page 2-13).

LOCATION	ITEM	ACTION **REMARKS**
REPAIR		
1. Air line (1)	Damaged tube section (2)	a. Using tube cutter, cut out. b. Take off.
2. Frame member (3)	Grommet (4)	Using long round-nose pliers, pull out.
3.	Tubing (5)	a. Using tube cutter, cut 3/4-inch (1.9 cm) shorter than damaged tube section (2). b. Using reamer, take off burrs. c. Push tubing (5) through hole in frame member (3).

AIR LINE REPAIR - CONTINUED

LOCATION	ITEM	ACTION **REMARKS**
REPAIR - CONTINUED		
4. Tubing (5) and air line (1)	Four nuts (6) and sleeves (7)	Slide onto ends of tubing (5).
5. Four nuts (6)	Four adapters (8)	Put in place.
6. Four adapters (8)	Four nuts (6)	Screw in, and tighten using 5/8-inch open-end box wrench and 9/16-inch box-end wrench.
7.	Coupling (9)	Screw adapters (8) into coupling (9) one turn, alternating adapters (8) on either side of coupling (9), and tighten using adjustable wrench and 9/16-inch open-end wrench.
8. Tubing (5) and frame member (3)	Grommet (4)	a. Slip over tubing (5). b. Push into place.

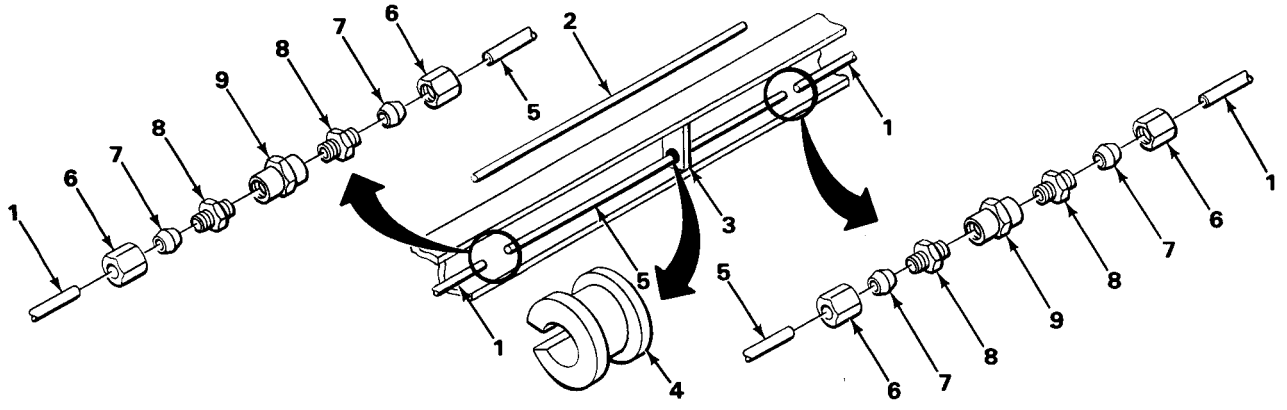

NOTE

FOLLOW-ON MAINTENANCE:

1. Check for air leaks (page 2-13).
2. Test operation of brakes (page 2-23).

TASK ENDS HERE

TA231289

AIRBRAKE COUPLINGS

This task covers:

a. Removal (page 4-126)
b. Installation (page 4-128)

INITIAL SETUP

Tools

Caps, vise jaw
Pliers, slipjoint
Screwdriver, cross-tip, number two
Screwdriver, flat-tip, 3/16-inch
Vise, machinist's
Wrench, box-end, 9/16-inch
Wrench, box-end, 11/4-inch
Wrench, box-end, 11/2-inch
Wrench, open-end, 9/16-inch
Wrench, open-end, 1-inch
Wrench, open-end, 11/16-inch
Wrench, open-end, 11/8-inch
Wrench, open-end, 11/4-inch
Wrench, open-end, 11/2-inch

Tools - Continued

Wrench, open-end box, 5/8-inch
Wrench, pipe, 12-inch

Materials/Parts

Tape, teflon (item 20, appendix E)

Personnel Required

One

Equipment Condition

Air reservoir drained (page 2-13).

LOCATION	ITEM	ACTION	REMARKS

NOTE

The couplings on both air lines are removed and installed the same way. This task is for one side; repeat for the other.

REMOVAL

1.	Coupling (1)	Dummy coupling (2)	Twist, and take off.
2.	Elbow (3)	Coupling (1)	Using 11/8-inch open-end wrench and 12-inch pipe wrench, unscrew and take off.
3.	Coupling (1)	Preformed packing (4)	Using 3/16-inch flat-tip screwdriver, pry out.
4.	Bracket (5) and dummy coupling (2)	Two S-links (6) with chain (7)	Using slip-joint pliers, bend and take off.
5.	Van body (8) and bracket (5)	Two screws (9)	Using number two cross-tip screwdriver, unscrew and take off.

AIRBRAKE COUPLINGS - CONTINUED

LOCATION	ITEM	ACTION **REMARKS**
REMOVAL - CONTINUED		
6. Van body (8)	Bracket (5)	Take off.
7. Adapter (10)	Nut (11)	Using 5/8-inch open-end box wrench and 9/16-inch open-end wrench, unscrew and take off.
8. Nipple pipe (12)	Adapter (10)	Using 9/16-inch box-end wrench, unscrew and take off.
9. Nipple pipe (12) and van body (8)	Nut (13), lock-washer (14), and tag (15)	a. Using 11/4-inch and 11/2-inch box-end wrenches, unscrew and take apart. b. Remove nipple pipe (12) and tag (15) from van body (8).
10. Nipple pipe (12)	Elbow (3)	a. Put in vise equipped with jaw caps. b. Using 12-inch pipe wrench, unscrew and take off. c. Take out of vise.
11. Coupling (16)	Coupling (17) and hose assembly (18)	Twist, and disconnect from coupling (16).
12. Adapter (19)	Coupling (17)	Using 11/8-inch and 1-inch open-end wrenches, unscrew and take off.

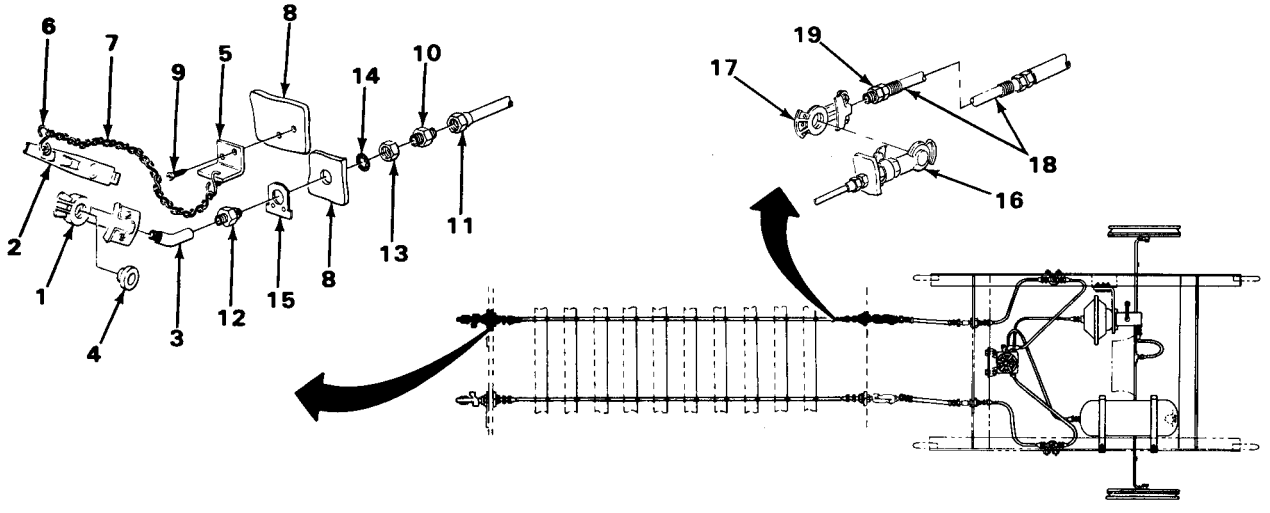

TA231290

AIRBRAKE COUPLINGS - CONTINUED

LOCATION	ITEM	ACTION **REMARKS**
REMOVAL - CONTINUED		
13. Coupling (1)	Preformed packing (2)	Using 3/16-inch flat-tip screwdriver, pry out.
14. Coupling (3)	Preformed packing (4)	Using 3/16-inch flat-tip screwdriver, pry out.
15. Adapter (5)	Nut (6)	Using 5/8-inch open-end box wrench and 9/16-inch open-end wrench, unscrew and take off.
16. Nipple pipe (7)	Adapter (5)	Using 9/16-inch box-end wrench, unscrew and take off.
17. Nipple pipe (7) and van body (8)	Nut (9) and lockwasher (10)	a. Using 11/4-inch and 11/2-inch box-end wrenches, unscrew and take apart. b. Remove nipple pipe (7) from van body (8).
18. Nipple pipe (7)	Coupling (1)	Using 11/4-inch and 11/8-inch open-end wrenches, unscrew and take off.
INSTALLATION		
19. Coupling (1)	Nipple pipe (7)	a. Wrap threads clockwise two turns with teflon tape. b. Screw in, and tighten using 1 1/8-inch and 11/4-inch open-end wrenches.
20. Nipple pipe (7) and van body (8)	Lockwasher (10) and nut (9)	a. Put nipple pipe (7) in place in van body (8). b. Screw in, and tighten using 1 1/4-inch and 11/2-inch box-end wrenches.
21. Nipple pipe (7)	Adapter (5)	a. Wrap threads clockwise two turns with teflon tape. b. Screw in, and tighten using 9/16-inch box-end wrench.
22. Adapter (5)	Nut (6)	Screw in, and tighten using 5/8-inch open-end box wrench and 9/16-inch open-end wrench.

AIRBRAKE COUPLINGS - CONTINUED

LOCATION	ITEM	ACTION **REMARKS**
INSTALLATION - CONTINUED		
23. Coupling (3)	Preformed packing (4)	Push in until completely seated in coupling (3).
24. Coupling (1)	Preformed packing (2)	Push in until completely seated in coupling (1).
25. Adapter (11)	Coupling (3)	a. Wrap threads clockwise two turns with teflon tape. b. Screw in, and tighten using 11/6-inch and 1-inch open-end wrenches.
26. Coupling (1)	Coupling (3)	Put in place, and twist.
27. Nipple pipe (12)	Elbow (13)	a. Wrap threads clockwise two turns with teflon tape. b. Screw in, and tighten using 12-inch pipe wrench and 11/4-inch open-end wrench.
28. Nipple pipe (12) and van body (14)	Lockwasher (15), tag (16), and nut (17)	a. Put tag (16) and nipple pipe (12) in place in van body (14). b. Screw in lockwasher (15) and nut (17), and tighten using 11/4-inch and 11/2-inch box-end wrenches.

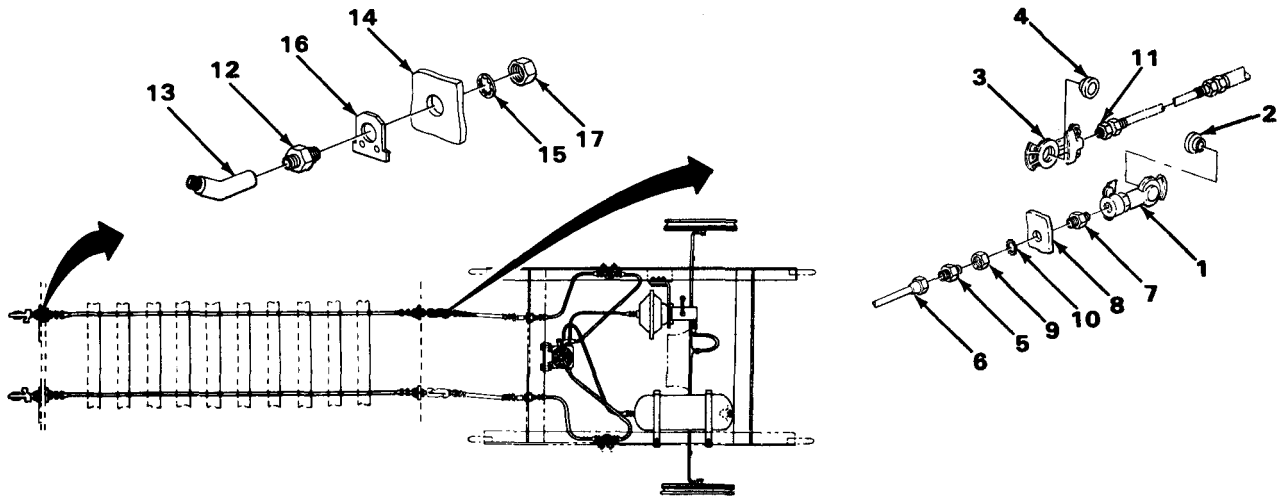

TA231291

AIRBRAKE COUPLINGS - CONTINUED

LOCATION	ITEM	ACTION **REMARKS**
INSTALLATION - CONTINUED		
29. Nipple pipe (1)	Adapter (2)	a. Wrap threads clockwise two turns with teflon tape. b. Screw in, and tighten using 9/16-inch box-end wrench.
30. Adapter (2)	Nut (3)	Screw in, and tighten using 5/8-inch open-end box wrench and 9/16-inch open-end wrench.
31. Van body (4)	Bracket (5)	Place in position, and hold.
32. Van body (4) and bracket (5)	Two screws (6)	Screw in, and tighten using number two cross-tip screwdriver.
33. Bracket (5) dummy coupling (7)	Two S-links (8) with chain (9)	Put in place, and using slip-joint pliers, bend links (8).
34. Coupling (10)	Preformed packing (11)	Push in place until completely seated in coupling (10).
35. Elbow (12)	Coupling (10)	a. Wrap threads clockwise two turns with teflon tape. b. Screw in, and tighten using 11/8-inch open-end wrench and pipe wrench.
36. Coupling (10)	Dummy coupling (7)	Put in place, and twist.

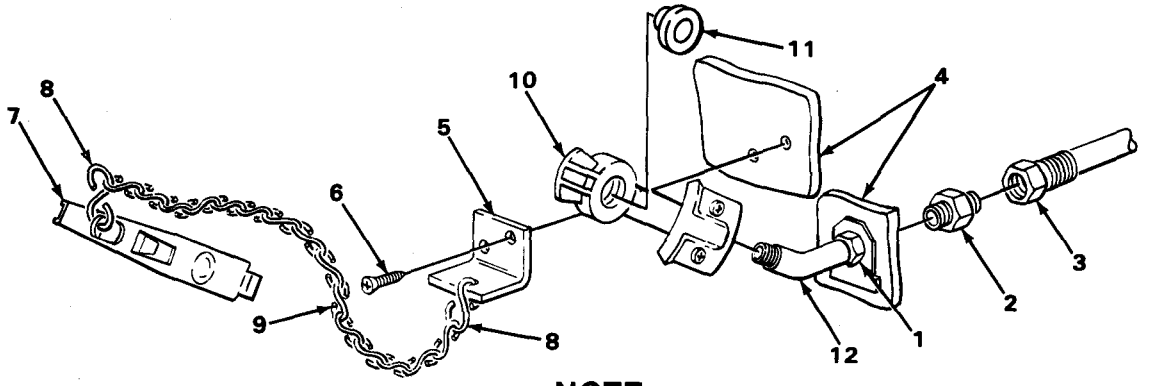

NOTE

FOLLOW-ON MAINTENANCE:

1. Check for air leaks (page 2-13).
2. Test operation of brakes (page 2-23).

TASK ENDS HERE

TA231292

AIR RESERVOIR

This task covers:

a. Removal (page 4-131)
b. Installation (page 4-132)

INITIAL SETUP

Tools

Handle, ratchet, 1/2-inch drive
Socket, 1/2-inch drive, 9/16-inch
Wrench, box-end, 9/16-inch
Wrench, box-end, 11/16-inch
Wrench, open-end, 9/16-inch
Wrench, open-end, 11/16-inch
Wrench, open-end box, 5/8-inch
Wrench, open-end box, 7/8-inch

Materials/Parts

Tape, teflon (item 20, appendix E)

Personnel Required

One

Equipment Condition

Air reservoir drained (page 2-13).
Draincock removed (page 4-133).

LOCATION	ITEM	ACTION **REMARKS**
REMOVAL		
1. Adapter (1)	Nut (2)	Using 7/8-inch open-end box wrench and 11/16-inch open-end wrench, unscrew and take off.
2. Air reservoir (3)	Adapter (1)	Using 11/16-inch box-end wrench, unscrew and take off.
3. Four brackets (4)	Two screws (5), lockwashers (6), and nuts (7)	Using 9/16-inch socket, ratchet handle with 1/2-inch drive, and 9/16-inch box-end wrench, unscrew and take out.

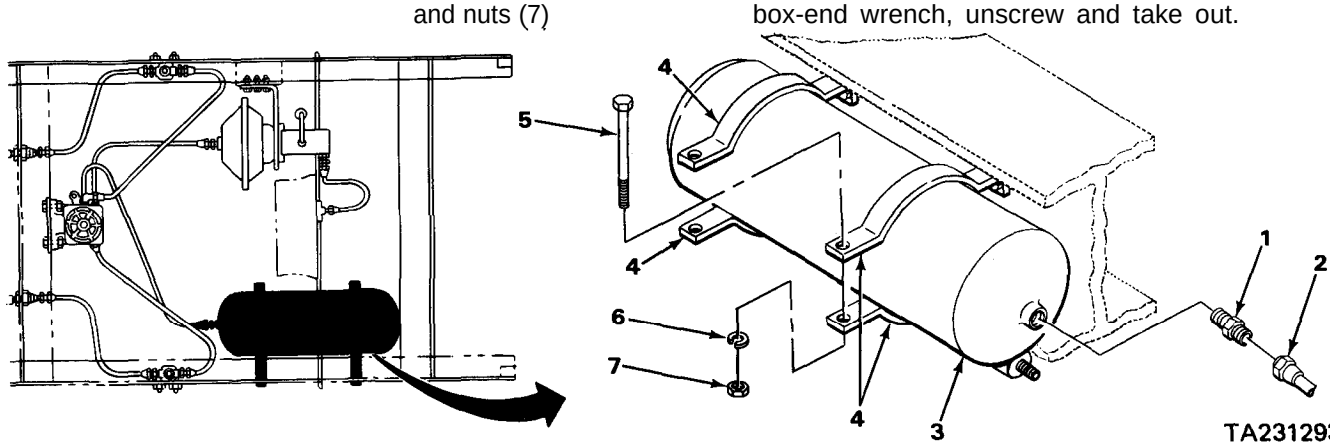

AIR RESERVOIR - CONTINUED

LOCATION	ITEM	ACTION **REMARKS**
REMOVAL - CONTINUED		
4. Two adapters (1)	Two nuts (2) with air line (3)	Using 5/8-inch open-end box wrench and 9/16-inch open-end wrench, unscrew and take off.
5. Four brackets (4)	Air reservoir (5)	Slide out.
6. Four brackets (4) and frame member (6)	Four screws (7), lockwashers (8), and nuts (9)	Using 9/16-inch socket, ratchet handle with 1/2-inch drive, and 9/16-inch box-end wrench, unscrew and take off.
7. Frame member (6)	Four brackets (4)	Take off.
INSTALLATION		
8.	Four brackets (4)	Put in place.
9. Four brackets (4) and frame member (6)	Four lockwashers (8), screws (7), and nuts (9)	Screw in, and tighten using 9/16-inch socket, ratchet handle with 1/2-inch drive, and 9/16-inch box-end wrench.
10. Four brackets (4)	Air reservoir (5)	Slide in place.
11. Two adapters (1)	Two nuts (2) with air line (3)	Screw in, and tighten using 5/8-inch open-end box wrench and 9/16-inch open-end wrench.
12.	Two lockwashers (10), screws (11), and nuts (12)	Screw in, and tighten using 9/16-inch socket, ratchet handle with 1/2-inch drive, and 9/16-inch box-end wrench.
13. Air reservoir (5)	Adapter (13)	a. Wrap threads clockwise two turns with teflon tape. b. Screw in, and tighten using 11/16-inch box-end wrench.
14. Adapter (13)	Nut (14)	Screw in, and tighten using 7/8-inch open-end box wrench and 11/16-inch open-end wrench.

AIR RESERVOIR - CONTINUED

INSTALLATION - CONTINUED

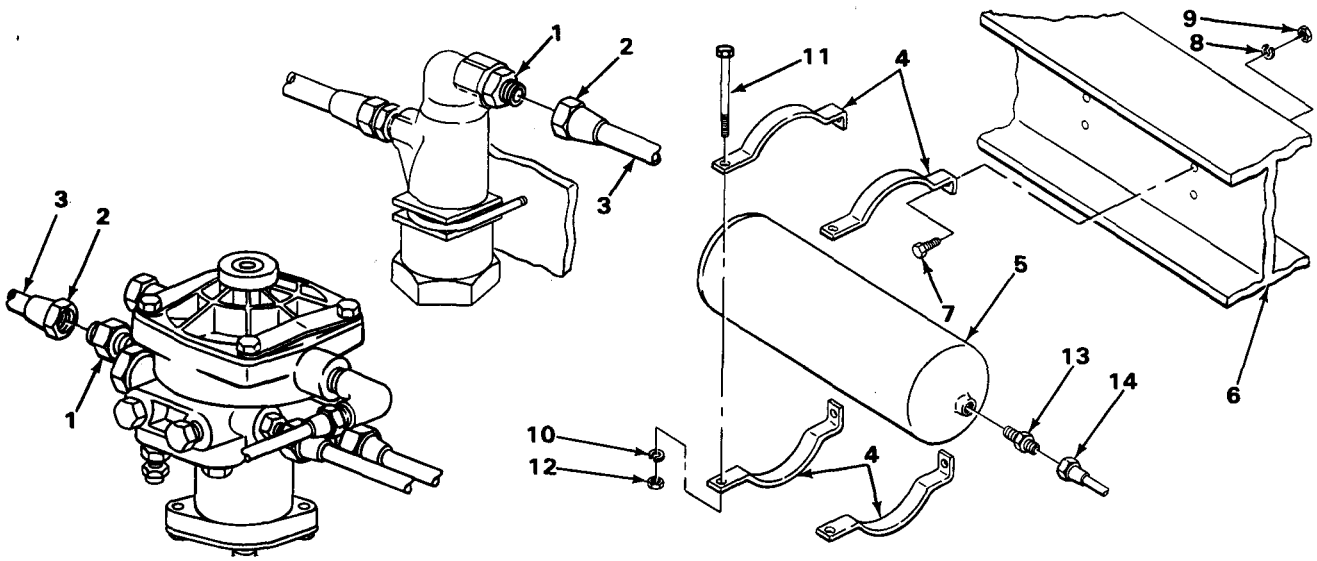

NOTE

FOLLOW-ON MAINTENANCE:

1. Install draincock (page 4-133).
2. Test for air leaks (page 2-13).
3. Test operation of brakes (page 2-23).

TASK ENDS HERE

DRAIN COCK

This task covers:

a. Removal (page 4-134)
b. Installation (page 4-134)

INITIAL SETUP

Tools

Wrench, open-end, 9/16-inch

Materials/Parts

Tape, teflon (item 20, appendix E)

Personnel Required

One

Equipment Condition

Air reservoir drained (page 2-13).

TA231294

DRAINCOCK - CONTINUED

LOCATION	ITEM	ACTION REMARKS
REMOVAL		
1. Air reservoir (1)	Draincock (2)	Using 9/16-inch open-end wrench, unscrew and take off.
INSTALLATION		
2.	**Draincock (2)**	a. Wrap threads clockwise two turns with teflon tape. b. Screw in, and tighten using 9/16-inch open-end wrench.

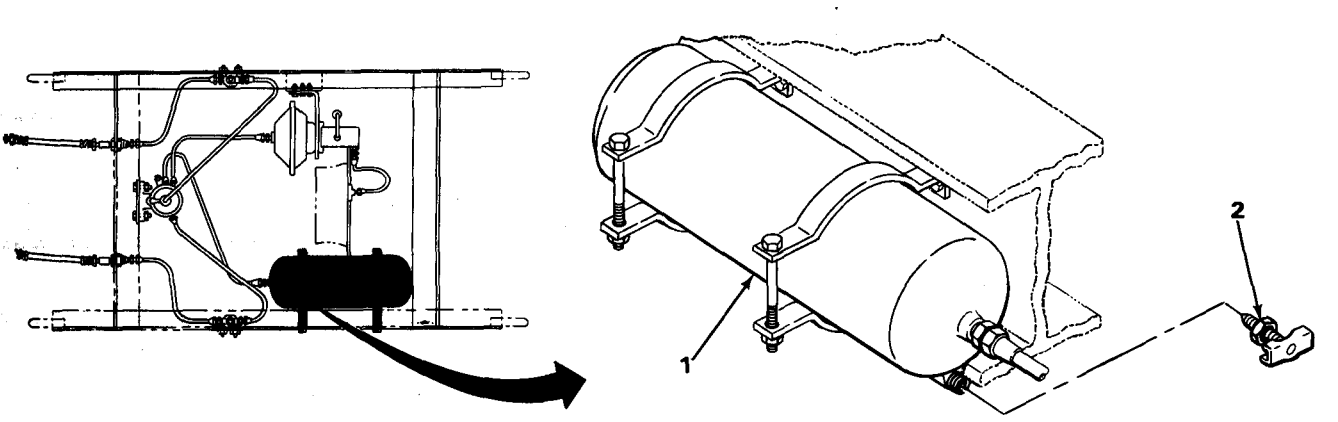

NOTE

FOLLOW-ON MAINTENANCE:

1. Check for air leaks (page 2-13).
2. Test operation of brakes (page 2-23).

TASK ENDS HERE

TA231295

AIR FILTERS

This task covers:

a. Removal (page 4-135)
b. Service (page 4-136)
c. Air Filter Bypass (page 4-138)
d. Installation (page 4-138)

INITIAL SETUP

Tools

Pliers, long round-nose
Wrench, adjustable, 12-inch
Wrench, box-end, 7/16-inch
Wrench, box-end, 9/16-inch
Wrench, open-end, 9/16-inch
Wrench, open-end, 11/2-inch
Wrench, open-end box, 5/8-inch

Materials/Parts

Tape, teflon (item 20, appendix E)

Personnel Required

One

Equipment Condition

Air reservoir drained (page 2-13).

LOCATION	ITEM	ACTION	REMARKS

NOTE

Both air filters are removed, serviced, bypassed, and installed the same way. This task is for one, repeat for the other.

Filter does not have to be removed for servicing.

REMOVAL

1.	Two adapters (1) and two air lines (2)	Two nuts (3)	Using 5/8-inch open-end box wrench and 9/16-inch open-end wrench, unscrew and take off.
2.	Filter (4)	Two adapters (1)	Using 9/16-inch box-end wrench, unscrew and take off.

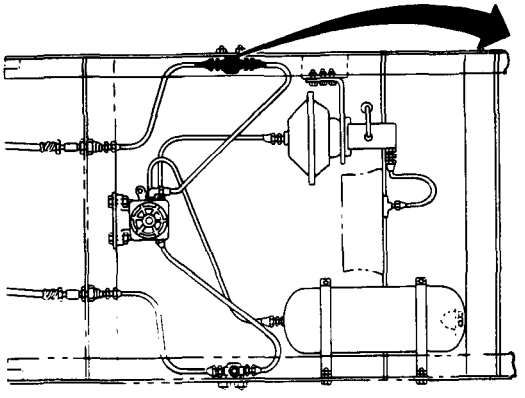

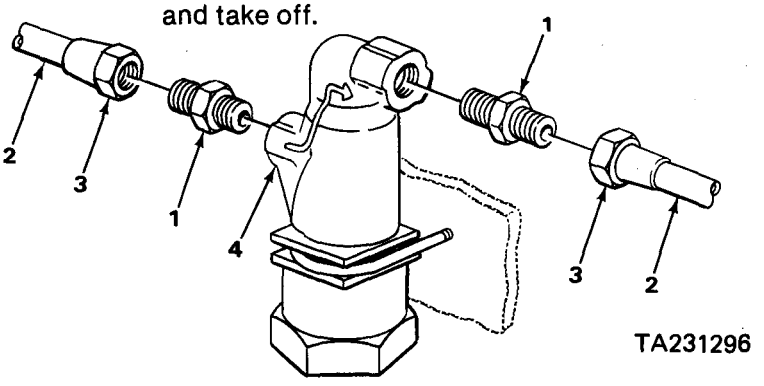

AIR FILTERS - CONTINUED

LOCATION	ITEM	ACTION **REMARKS**
REMOVAL - CONTINUED		
3. U-bolt (1) and frame member (2)	Two nuts (3) and lockwashers (4)	Using 7/16-inch box-end wrench, unscrew and take off.
4. Filter (5) and frame member (2)	U-bolt (1)	Take off.
5. Frame member (2)	Filter (5)	Take off.

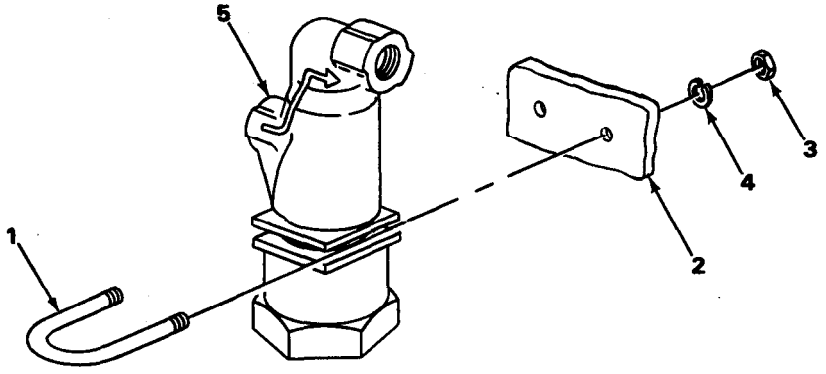

SERVICE		
6. Adapter bushing (6)	Plug (7)	Using 12-inch adjustable wrench and 11/2-inch open-end wrench, unscrew and take off.
7. Filter (5)	Adapter bushing (6)	Using 11/2-inch open-end wrench and 12-inch adjustable wrench, unscrew slowly and take off.
8. Adapter bushing (6)	Gasket (8)	Take off.

TA231297

AIR FILTERS - CONTINUED

LOCATION	ITEM	ACTION **REMARKS**
SERVICE - CONTINUED		
9. Washer (9) and filter (5)	Spring (10)	Using long round-nose pliers, take off.
10. Filter element (11) and filter (5)	Washer (9)	Using long round-nose pliers, take off.
11. Filter (5)	Filter element (11)	Take out.
12.	Filter element (11)	Put in place.
13. Filter element (11) and filter (5)	Washer (9)	Put in place.
14. Washer (9) and filter (5)	Spring (10)	Put in place.
15. Adapter bushing (6)	Gasket (8)	Put in place.
16. Filter (5)	Adapter bushing (6)	Screw in, and tighten using 11/2-inch open-end wrench and 12-inch adjustable wrench.
17. Adapter bushing (6)	Plug (7)	Screw in, and tighten using 12-inch adjustable wrench and 11/2-inch open-end wrench.

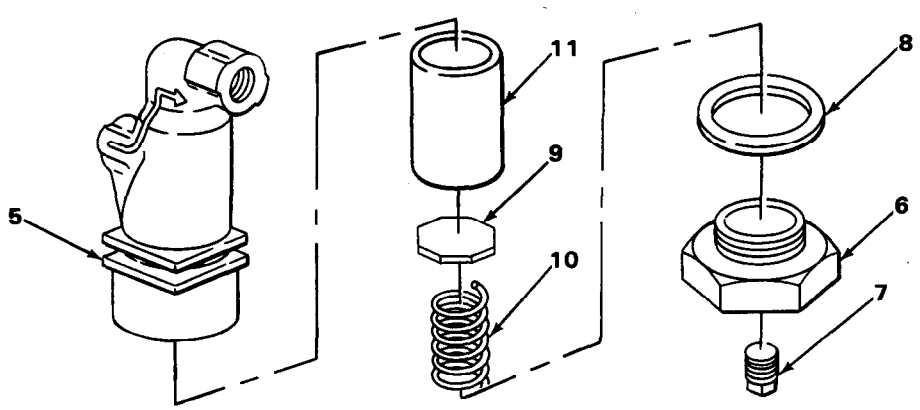

TA231298

AIR FILTERS - CONTINUED

LOCATION	ITEM	ACTION **REMARKS**
AIR FILTER BYPASS		

NOTE

Air filters may be eliminated using this bypass procedure.

18.	Filter	Remove (page 4-135).
19. Two adapters (1) and two air lines (2)	Two nuts (3)	Screw into adapters (1), and tighten using 5/8-inch open-end box and 9/16-inch open-end wrenches.
20. Two adapters (1)	Coupling (4)	a. Wrap threads clockwise two turns with teflon tape. b. Screw adapters (1) into coupling (4) one turn, alternating adapters (1) on either side of coupling (4), and tighten using 12-inch adjustable wrench and 9/16-inch open-end wrench.

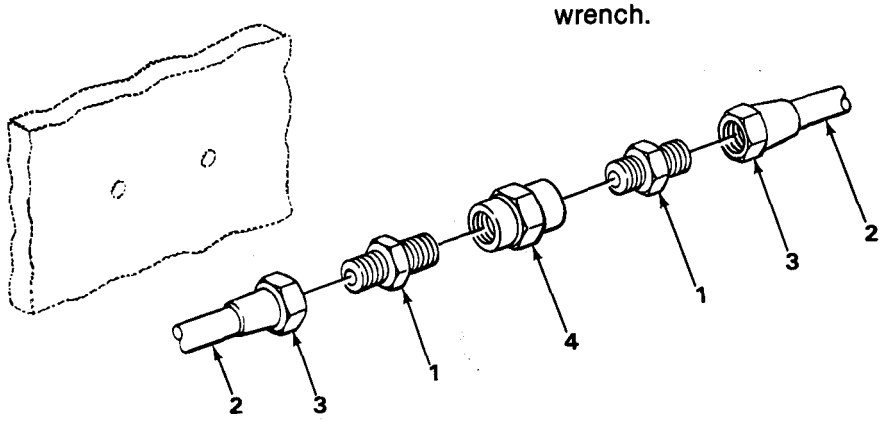

INSTALLATION

21. Frame member (5)	Filter (6)	Put in place.
22. Filter (6) and frame member (5)	U-bolt (7)	Put in place.
23. U-bolt (7) and frame member (5)	Two lockwashers (8) and nuts (9)	Screw in, and tighten using 7/16-inch box-end wrench.
24. Filter (6)	Two adapters (10)	a. Wrap threads clockwise two turns with teflon tape. b. Screw in, and tighten using 9/16-inch box-end wrench.

TA231299

AIR FILTERS - CONTINUED

LOCATION	ITEM	ACTION **REMARKS**
INSTALLATION		
25. Two adapters (10) and two air lines(11)	Two nuts (12)	Screw in, and tighten using 5/8-inch open-end box wrench and 9/16-inch open-end wrench.

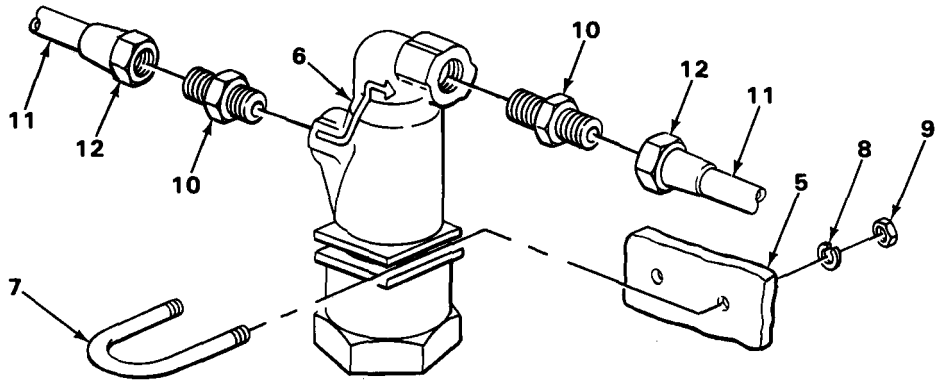

NOTE

FOLLOW-ON MAINTENANCE:

1. Check for air leaks (page 2-13).
2. Test operation of brakes (page 2-23).

TASK ENDS HERE

TA231300

RELAY VALVE

This task covers:

a. Removal (page 4-140)
b. Installation (page 4-141)

INITIAL SETUP

Tools

Handle, ratchet, 3/8-inch drive
Socket, 3/8-inch drive, 9/16-inch
Wrench, box-end, 9/16-inch
Wrench, box-end, 11/16-inch
Wrench, box-end, 7/8-inch
Wrench, open-end, 1/2-inch
Wrench, open-end, 9/16-inch
Wrench, open-end, 11/16-inch
Wrench, open-end box, 5/8-inch
Wrench, open-end box, 7/8-inch

Materials/Parts

Tape, teflon (item 20, appendix E)

Personnel Required

One

Equipment Condition

Air reservoir drained (page 2-13).

LOCATION	ITEM	ACTION **REMARKS**
REMOVAL		
1. Two air lines (1) and two adapters (2)	Two nuts (3)	Using 5/8-inch open-end box wrench and 9/16-inch open-end wrench, unscrew and take off.
2. Air line(4) and elbow (5)	Nut (6)	Using 5/8-inch open-end box wrench and 1/2-inch open-end wrench, unscrew and take off.
3. Air line (7) and adapter (8)	Nut (9)	Using 7/8-inch open-end box wrench and 11/16-inch open-end wrench, unscrew and take off.
4. Relay valve (10)	Two adapters (2)	Using 9/16-inch box-end wrench, unscrew and take off.
5.	Elbow (5)	Using 1/2-inch open-end wrench, unscrew and take off.
6. Adapter (11)	Adapter (8)	Using 11/16-inch box-end wrench, unscrew and take off.
7. Relay valve (10)	Adapter (11)	Using 7/8-inch box-end wrench, unscrew and take off.

RELAY VALVE - CONTINUED

LOCATION	ITEM	ACTION **REMARKS**
REMOVAL - CONTINUED		
8. Relay valve (10) and frame member (12)	Two screws (13), lockwashers (14), and nuts (15)	Using 9/16-inch socket, ratchet handle with 3/8-inch drive, and 9/16-inch open-end wrench, unscrew and take off.
9. Frame member (12)	Relay valve (10)	Take off.
INSTALLATION		
10.	Relay valve (10)	Put in place.
11. Relay valve (10) and frame member (12)	Two lockwashers (14), screws (13), and nuts (15)	Screw in, and tighten using 9/16-inch socket, ratchet handle with 3/8-inch drive, and 9/16-inch open-end wrench.
12. Relay valve (10)	Adapter (11)	a. Wrap threads clockwise two turns with teflon tape. b. Screw in, and tighten using 7/8-inch box-end wrench.
13. Adapter (11)	Adapter (8)	a. Wrap threads clockwise two turns with teflon tape. b. Screw in, and tighten using 11/16-inch box-end wrench.
14. Relay valve (10)	Elbow (5)	a. Wrap threads clockwise two turns with teflon tape. b. Screw in, and tighten using 1/2-inch open-end wrench.

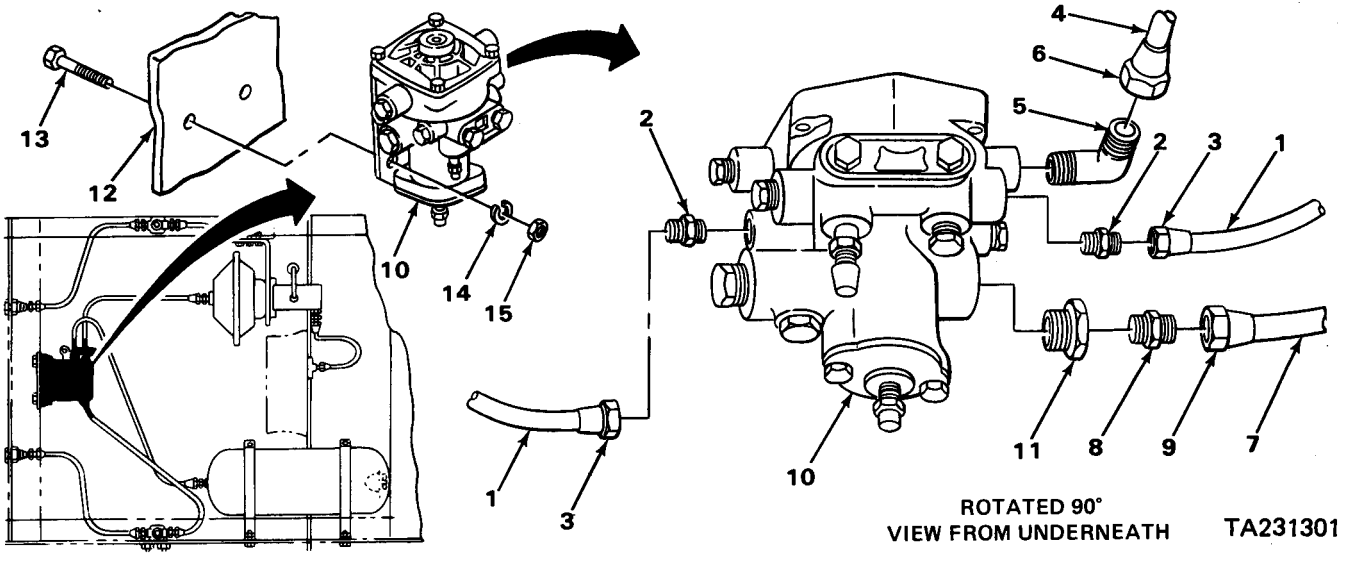

RELAY VALVE - CONTINUED

LOCATION	ITEM	ACTION **REMARKS**
INSTALLATION - CONTINUED		
15. Relay valve(1)	Two adapters (2)	a. Wrap threads clockwise two turns with teflon tape. b. Screw in, and tighten using 9/16-inch box-end wrench.
16. Air line (3) and adapter (4)	Nut (5)	Screw in, and tighten using 7/8-inch open-end box wrench and 11/16-inch open-end wrench.
17. Air line (6) and elbow (7)	Nut (8)	Screw in, and tighten using 5/8-inch open-end box wrench and 1/2-inch open-end wrench.
18. Two air lines (9) and adapters (2)	Two nuts (10)	Screw in, and tighten using 5/8-inch open-end box wrench and 9/16-inch open-end wrench.

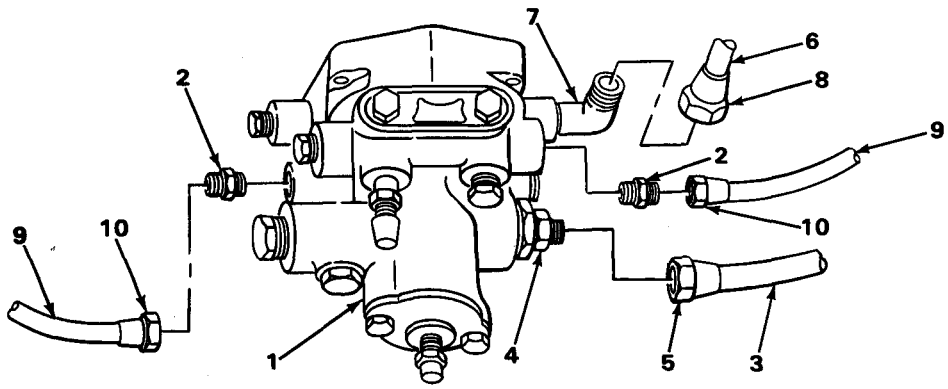

NOTE

FOLLOW-ON MAINTENANCE:

1. Check for air leaks (page 2-13).
2. Test operation of brakes (page 2-23).

TASK ENDS HERE

TA231302

Section IX. WHEEL, HUB, AND DRUM MAINTENANCE

HB AND DRUM

This task covers:

a. Removal (page 4-144)
b. Installation (page 4-145)

INITIAL SETUP

Tools

Block, wood
Chisel, cold hand, 3/4-inch
Driftpin, brass, 3/8-inch
Hammer, hand, ball-peen, 2-lb
Handle, ratchet, 1/2-inch drive
Knife, putty
Press, arbor
Puller/installer, cup
Puller, seal
Punch, drive-pin, 5/32-inch
Socket, 1/2-inch drive, 1/2-inch
Socket, 1/2-inch drive, 5/8-inch
Trestle, motor vehicle, 10-ton
Wrench, hub-nut with handle
Wrench, open-end, 5/8-inch

Materials/Parts

Grease, GAA (item 10, appendix E)

Personnel Required

Two

Equipment Condition

Tire and wheel assembly removed (page 4-148.1).

LOCATION	ITEM	ACTION	REMARKS

NOTE

Both hubs and drums are removed and installed the same way. This task is for one hub and drum; repeat for the other.

Brakeshoes should be adjusted away from drums (page 4-80).

WARNING

When touched, overheated brakedrums and hubs can cause severe burns to personnel.

HUB AND DRUM – CONTINUED

LOCATION	ITEM	ACTION REMARKS
REMOVAL		
1. Cap (1) and hub (2)	Six screws (3) and lockwashers (4)	a. Put trestle under axle. b. Using 1/2-inch socket and ratchet handle with 1/2-inch drive, unscrew and take off.
2. Hub (2)	Cap (1) and gasket (5)	Take off, and separate. **It may be necessary to scrape gasket off with putty knife.**
3. Spindle (6) and lockwasher (7)	Nut (8)	a. Using ball-peen hammer and 5/32-inch punch, bend tab of lockwasher (7) off nut (8). b. Using hub-nut wrench and handle, unscrew and take off.
4. Spindle (6) and nut (9)	Lockwasher (7)	Slide off.
5. Spindle (6) and washer (10)	Nut (9)	Using hub-nut wrench and handle, unscrew take off.
6. Spindle (6) and bearing (11)	Washer (10)	Slide off.
7. Spindle (6)	Hub (2) and drum (12)	Pull out, and push back to separate bearing (11).
8.	Outer bearing (11)	Slide off.
9.	Hub (2) and drum (12)	With the aid of assistant, take off.

NOTE

If only removing hub and drum go to step 27.

11. Adapter plate (13) and hub (2)	Six studs (14)	Using ball-peen hammer and 3/8-inch brass drift, drive out.
12. Adapter plate (13)	Hub (2)	Using ball-peen hammer and 3/4-inch cold hand chisel, take off.

NOTE

Seal may stay in hub or on spindle.

HUB AND DRUM - CONTINUED

LOCATION	ITEM	ACTION **REMARKS**
REMOVAL - CONTINUED		
13. Hub (2) or spindle (6)	Seal (15)	Using seal puller, take off and separate.
14. Hub (2)	Inner bearing (16)	Take out.
15.	Two bearing cups (17)	Using cup puller/installer, take out.
16. Spindle (6)	Wiper (18)	Using seal puller, take off.
17. Drum (12) and adapter plate (13)	Ten studs (19), ten nuts (20), lockwashers (21), and inspection hole cover (22)	a. Using 5/8-inch socket, ratchet handle with 1/2-inch drive, and 5/8-inch open-end wrench, unscrew and take off. b. Using ball-peen hammer and 3/8-inch brass drift, drive studs (19) out.
18. Drum (12)	Adapter plate (13)	Using ball-peen hammer, unseat and separate.
INSTALLATION		
19. Drum (12)	**Adapter plate (13)**	**Using ball-peen hammer, tap in place.**

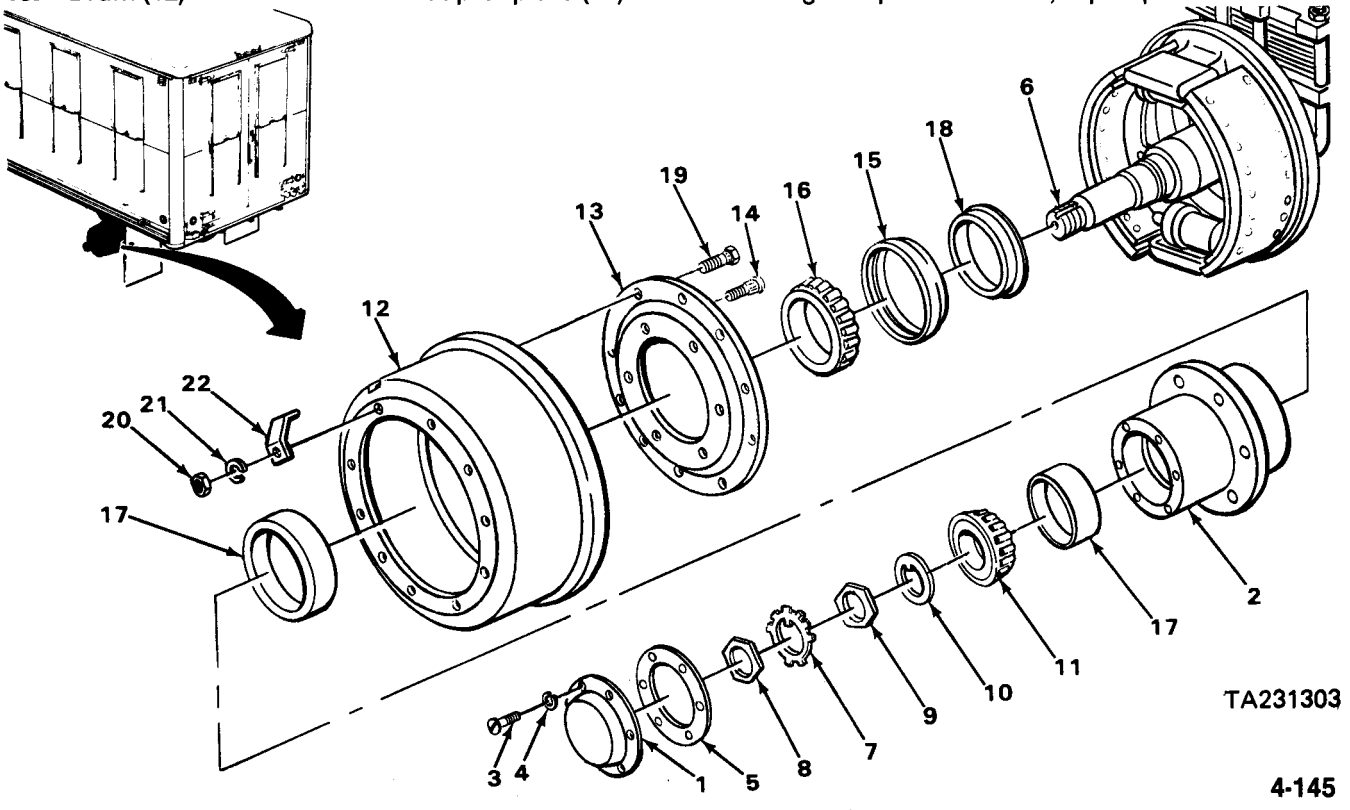

HUB AND DRUM - CONTINUED

LOCATION	ITEM	ACTION **REMARKS**
INSTALLATION - CONTINUED		
20. Drum (1)	Ten studs (2), inspection hole cover (3), ten lockwashers (4), and nuts (5)	a. Put hole cover (3) in place. b. Screw lockwashers (4), nuts (5), and studs (2) in, and tighten using 5/8-inch socket, ratchet handle with 1/2-inch drive, and 5/8-inch open-end wrench.
21. Spindle (6)	Wiper (7)	Put in place, and seat using ball-peen hammer and wood block.
22. Hub (8)	Two bearing cups (9)	Put in place, and seat using cup pulled installer.
23.	inner bearing (10)	a. Lubricate (page 4-5). b. Put in place.
24.	Seal(11)	Put in place, and seat using ball-peen hammer and wood block. **Do not hit seal directly with ball. peen hammer. Be certain seal is firmly seated all the way around.**
25. Adapter plate (12)	Hub (8)	Put in place.
26. Adapter plate (12) and hub (8)	Six studs (13)	Using arbor press, drive in place.
27. Spindle (6)	Hub (8) and drum (1)	With the aid of assistant, put in place.
28. Spindle (6) and hub (8)	Outer bearing (14)	a. Lubricate (page 4-5). b. Put in place.
29. Spindle (6) and outer bearing (14)	Washer (15)	Slide in place.
30. Spindle (6) and washer (15)	Nut (16)	a. Using hub-nut wrench, screw in and tighten until hub (8) binds on spindle (6) when rotated. b. Using hub-nut wrench, back off one-eighth turn. c. Rotate hub (8) to make sure it turns freely on spindle (6). **If hub still binds on spindle, repeat step 30b.**

HUB AND DRUM - CONTINUED

LOCATION	ITEM	ACTION **REMARKS**
INSTALLATION - CONTINUED		
	NOTE	
	Check adjustment by grabbing drum and attempting to rock it on spindle. If bearings are properly adjusted, there will be no movement of brakedrum. Brakedrum should not rock while turning freely.	
31. Spindle (6) and nut (16)	Lockwasher (17)	Slide in place.
32. Spindle (6) and lockwasher (17)	Nut (18)	a. Screw in, and tighten using hub-nut wrench. b. Using ball-peen hammer and 5/32-inch drive-pin punch, bend tabs of lock-washer (17) over nut (16) and nut (18).
33. Hub (8)	Cap (19) and gasket (20)	a. Put together. b. Put in place on hub (8).
34. Cap (19) and hub (8)	Six lockwashers (21) and nuts (22)	Screw in, and tighten using 1/2-inch socket and ratchet handle with 1/2-inch drive.

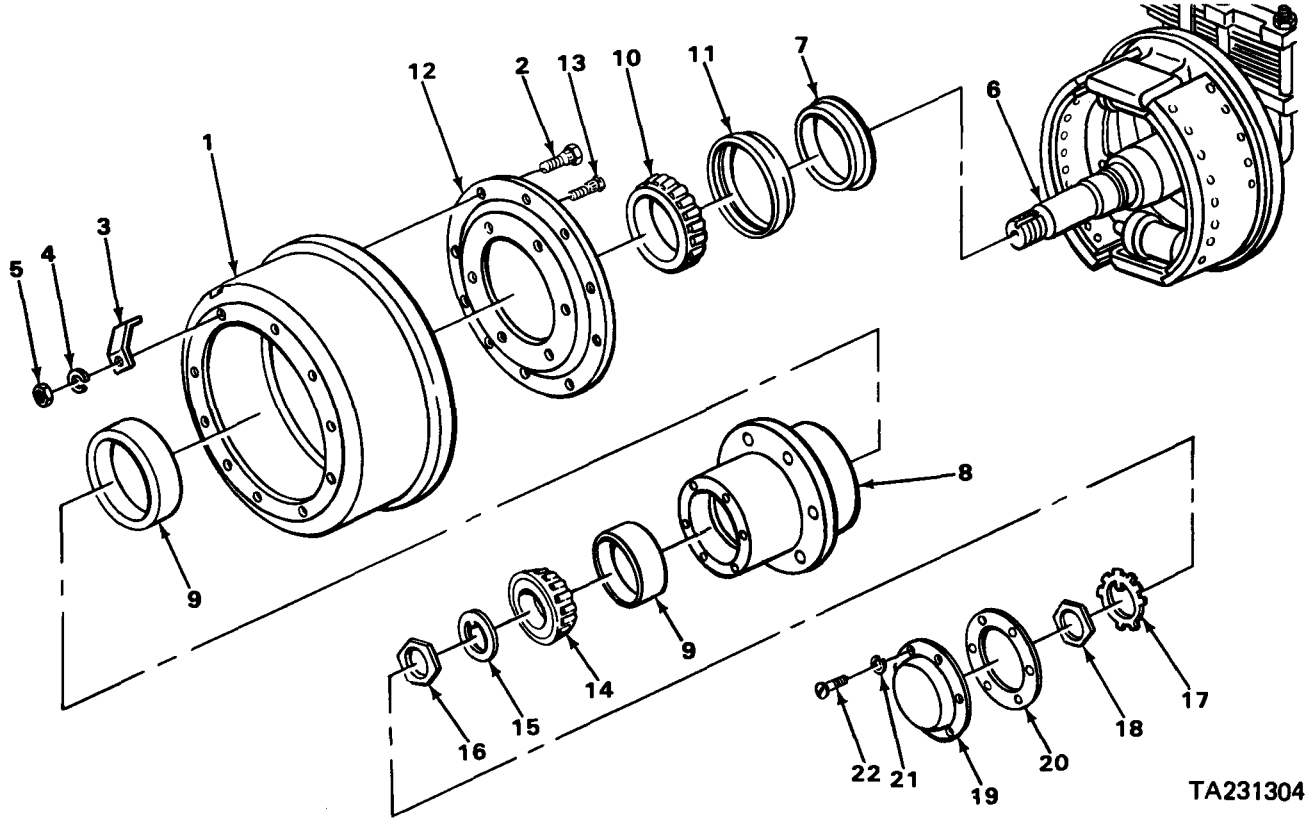

HUB AND DRUM – CONTINUED

INSTALLATION – CONTINUED

NOTE

FOLLOW-ON MAINTENANCE:

1. Adjust brakes (page 4-80).
2. Install tire and wheel assembly (page 4-148.1).
3. Test operation of brakes (page 2-23).

TASK ENDS HERE

WHEEL

NOTE

For information on wheel removal and installation, see TM 9-2610-200-14.

Torque for wheel mounting stud nuts and lug nuts is 400-425 ft-lb (540-560 N m) (see page 4-148.3 for tightening sequence).

TASK ENDS HERE

TIRE AND WHEEL ASSEMBLY

This task covers

a. Removal (page 4-148.1)
b. Installation (page 4-148.2)

INITIAL SETUP

Tools

Jack, hydraulic, 10-ton
Trestle, motor vehicle, S-ton capacity, (two required)
Wrench, lug/stud nut

Personnel Required

One

Equipment Condition

Spare tire and wheel assembly removed (page 4-148.5)

LOCATION	ITEM	ACTION	REMARKS
REMOVAL			
1. Chassis frame (1)	Tires (2)	Take chock block (3) from tire and wheel assembly being removed.	

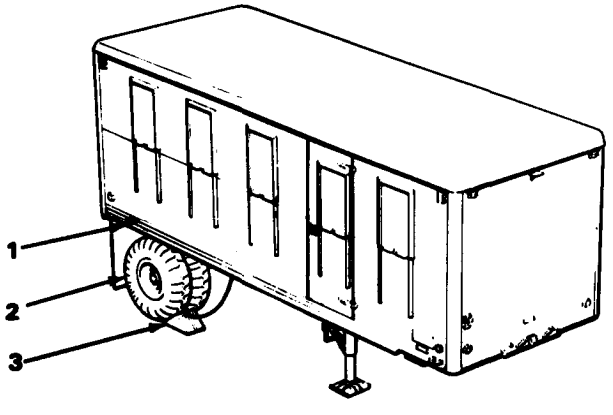

TA231222

TIRE AND WHEEL ASSEMBLY – CONTINUED

LOCATION	ITEM	ACTION REMARKS
REMOVAL – CONTINUED		
	NOTE Inspect stud nut mark to determine direction of rotation before starting removal. Stud-nut marked R must be turned counterclockwise, and stud nut marked L, clockwise to remove.	
2. Outer tire and wheel assembly (1)	Six lug nuts (2)	Using lug wrench, loosen until free but do not remove.
	NOTE It may be necessary to place jack on a block of wood when raising late model trailers.	
3. Side of frame (3) where tire and wheel assembly is being removed	Axle (4)	a. Place jack under axle (4). b. Raise tire and wheel assemblies (1) and (5) until clear of ground. c. Place trestles under spring brackets (5.1) of wheel assembly to be removed.
4.	Six lug nuts (2)	Unscrew, and take out.
5.	Outer tire and wheel assembly (1)	Take off of stud nuts (6).
	NOTE If inner tire and wheel assembly does not need to be removed, skip steps 6 thru 11.	
6. Inner tire and wheel assembly (5)	Six stud nuts (6)	Using stud nut wrench, unscrew and take out.
7. Lugbolts (7)	Inner tire and wheel assembly (5)	Take off of lugbolts (7).
INSTALLATION		
8.	Inner tire and wheel assembly (5)	Place on lugbolts (7).

TIRE AND WHEEL ASSEMBLY - CONTINUED

LOCATION	ITEM	ACTION **REMARKS**
INSTALLATION - CONTINUED		
	NOTE Lugbolts (7) are marked R. or L. in direction of forward wheel rotation. To tighten stud nuts (6) on right side, turn clockwise. To tighten stud nuts (6) on left side, turn counterclockwise.	
9.	Six stud nuts (6)	Screw onto lugbolts (7), and tighten in the sequence shown using stud nut wrench.
10. Side of frame (3) where tire and wheel assembly is being removed	Axle (4)	a. Take trestles out from under spring brackets (5.1). b. Lower jack until inner tire and wheel assembly (5) rests on the ground.
11. Lugbolts (7)	Six stud nuts (6)	a. Using stud nut wrench, tighten as much as possible in sequence shown below. b. Tighten stud nuts to 400-425 ft-lb (540-560 Nm) of torque.
12.	Axle (4)	Raise jack until inner tire and wheel assembly (5) is off of ground.

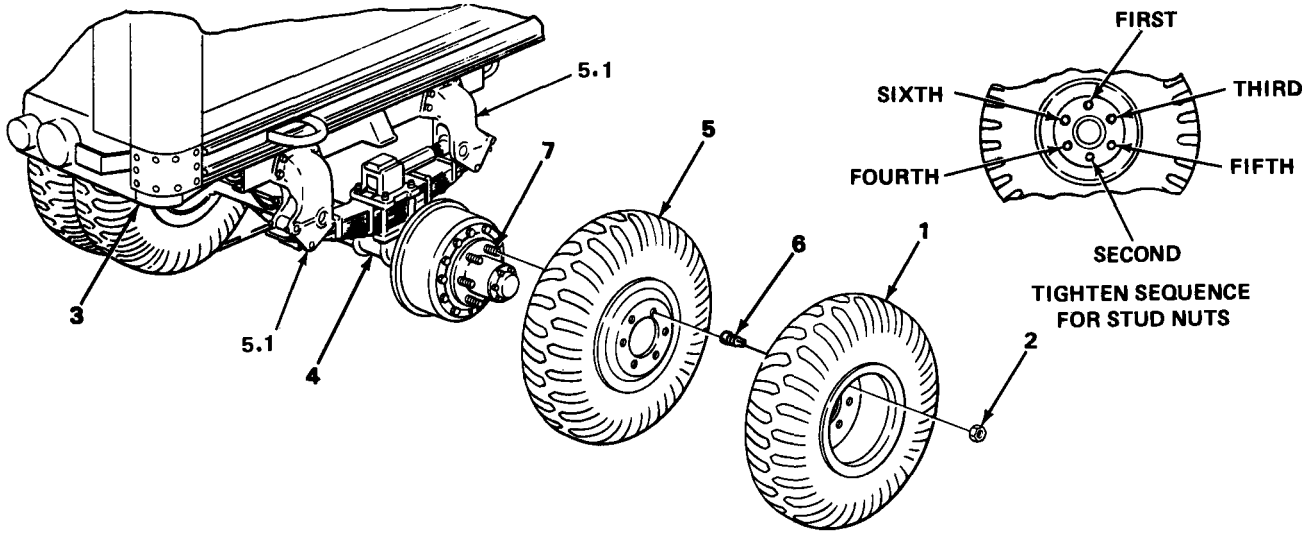

TA510759

TIRE AND WHEEL ASSEMBLY – CONTINUED

LOCATION	ITEM	ACTION REMARKS
INSTALLATION – CONTINUED		
13. Six stud nuts (1)	Outer tire and wheel assembly (2)	Place on stud nuts (1).

NOTE

Stud nuts (1) are threaded R. or L. in direction of forward wheel rotation. To tighten lug nuts (3) on right side, turn clockwise. To tighten lug nuts (3) on left side, turn counterclockwise.

14. Stud nuts (1)	Six lug nuts (3)	Screw onto stud nuts (1), and tighten in the sequence shown below using lug nut wrench.
15. Side of frame (4) where tire and wheel assembly is being removed	Axle (5)	Lower jack, take out from under axle (5), and stow.
16. Six stud nuts (1)	Six lug nuts (3)	a. Using lug nut wrench, tighten as much as possible in sequence shown below. b. Tighten lug nuts to 400–425 ft-lb (540–560 Nm) of torque. c. Put chock blocks in place for tire and wheel assembly installed (page 2-24).

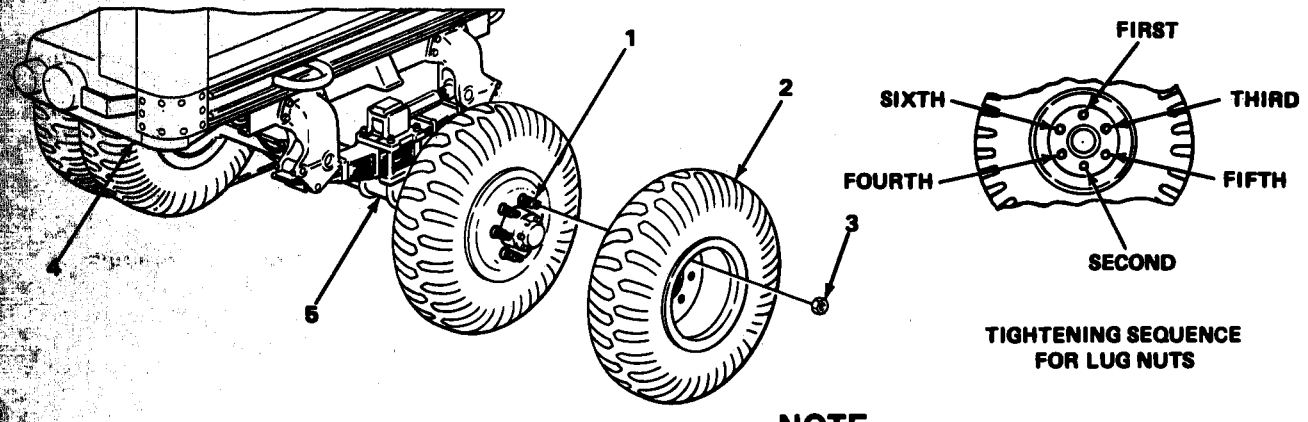

TIGHTENING SEQUENCE FOR LUG NUTS

NOTE

FOLLOW-ON MAINTENANCE: Install spare tire and wheel assembly (page 4-148.5).

TASK ENDS HERE

TA231224

SPARE TIRE AND WHEEL ASSEMBLY

This task covers:

a. Removal (page 4-148.5)
b. Installation (page 4-148.6)

INITIAL SETUP

Tools	Personnel Required
Wrench, lug/stud nut	One

LOCATION	ITEM	ACTION	REMARKS

REMOVAL

WARNING

Make sure pawl is engaged in ratchet teeth. if pawi is not engaged, spare tire and wheel assembly will fall and cause serious injury.

1. Spare wheel carrier (1) and studs (2)	Four nuts (3)	Using lug wrench, unscrew and take off.	

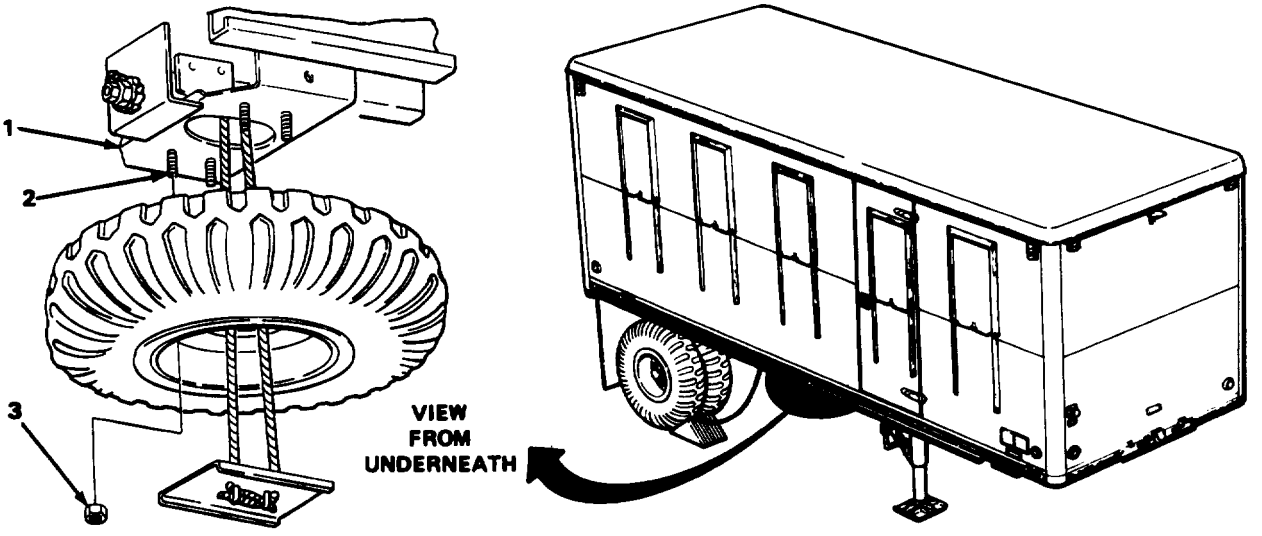

TA231 225

SPARE TIRE AND WHEEL ASSEMBLY – CONTINUED

	LOCATION	ITEM	ACTION REMARKS
REMOVAL – CONTINUED			
		WARNING Weight of spare tire and wheel assembly will cause lug nut wrench to spin freely if not held securely after pawl has been taken off ratchet teeth. Freely spinning lug wrench may cause injury to personnel. Allow spare tire and wheel assembly to lower slowly.	
2.	Spare tire and wheel assembly carrier (1)	Ratchet wheel (2)	Using lug nut wrench, turn clockwise enough to free pawl (3).
3.		Pawl (3)	Lift off of ratchet wheel (2).
4.		Ratchet wheel (2)	Using lug nut wrench, turn counterclockwise to lower spare tire and wheel assembly (4).
5.		Support assembly (5)	a. Drop down and angle one end up center hole in spare tire and wheel assembly (4). b. Lift out of spare tire and wheel assembly (4).
INSTALLATION			
6.		Spare tire and wheel assembly (4)	Place under spare tire and wheel assembly carrier (1) with wheel dish (6) down.
7.		Support assembly (5)	Put one end down through center hole in spare tire and wheel assembly (4), and have support assembly (5) lie flat. **Support assembly (5) must not block any holes in spare tire and wheel assembly (4).**
8.	Spare tire and wheel assembly carrier (1)	Pawl (3)	Put on ratchet wheel (2).

SPARE TIRE AND WHEEL ASSEMBLY - CONTINUED

	LOCATION	ITEM	ACTION **REMARKS**
INSTALLATION - CONTINUED			
9.		Ratchet wheel (2)	Turn clockwise to raise spare tire and wheel assembly (4) using lug nut wrench.
10.		Spare tire and wheel assembly (4)	Guide up so studs (7) on spare tire and wheel assembly carrier (1) fit into holes in spare tire and wheel assembly (4).
11.	Inside of spare tire wheel assembly carrier (1)	Four lug nuts (8)	Screw in, and tighten using lug nut wrench.

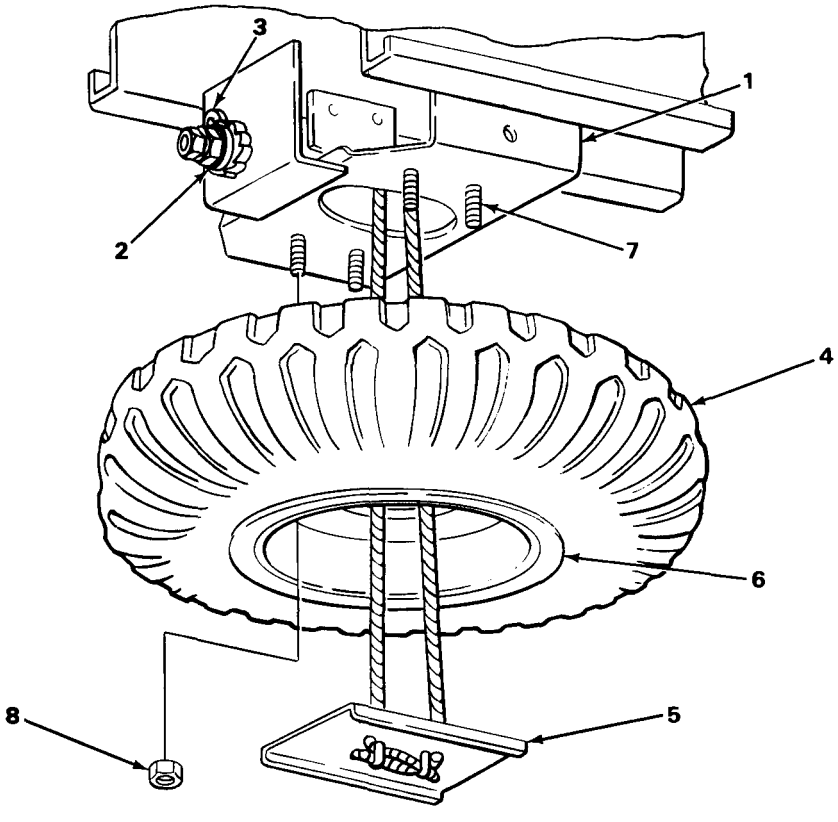

NOTE

FOLLOW-ON MAINTENANCE: Replace damaged tire and wheel assembly.

TASK ENDS HERE

TA231226

Section X. TIRE AND TUBE MAINTENANCE

TIRES

NOTE

For information on tire and tube removal and installation, refer to TM 9-2610-200-14.

TUBES

NOTE

For information on tube removal, repair, and installation, refer to TM 9-2610-200-14.

TASK ENDS HERE

Section XI. FRAME AND TOWING ATTACHMENTS MAINTENANCE

SPARE TIRE AND WHEEL CARRIER

This task covers

a. Removal (page 4-149)
b. Repair (page 4-150)
c. Installation (page 4-151)

INITIAL SETUP

Tools

Chisel, cold hand, 1/2-inch
Extension, 6-inch
Hammer, hand, ball-peen, 2-lb
Handle, ratchet, 1/2-inch drive
Pliers, slip-joint
Socket, 1/2-inch drive, 7/16-inch
Socket, 1/2-inch drive, 15/16-inch
Wrench, box-end, 15/16-inch

Materials/Parts

Rivet

Personnel Required

Two

Equipment Condition

Spare tire and wheel removed (page 4-148.5).

LOCATION	ITEM	ACTION	REMARKS
REMOVAL			
1. Carrier body (1) and frame members (2)	Four screws (3) and nuts (4)	With aid of assistant, using 15/16-inch socket, 6-inch extension, ratchet handle with 1/2-inch drive, and 15/16-inch box-end wrench, unscrew and take off.	
2. Frame members (2)	Carrier body (1)	Take off.	

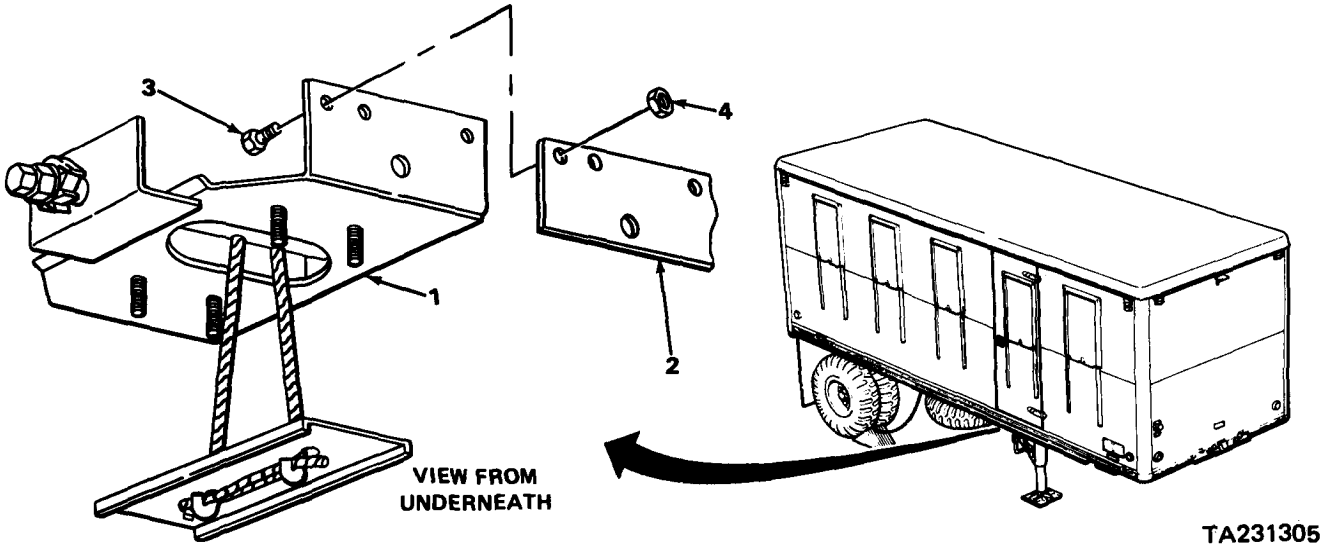

TA231305

SPARE TIRE AND WHEEL CARRIER – CONTINUED

	LOCATION	ITEM	ACTION REMARKS
REPAIR			
3.	Carrier body (1)	Shaft (2) and cable (3)	Turn clockwise until cable (3) is fully unwound.
4.	Two U-bolts (4) and pickup member (5)	Four nuts (6) and lockwashers (7)	Using 7/16-inch socket and ratchet handle with 1/2-inch drive, unscrew and take off.
5.	Pickup member (5)	Two U-bolts (4)	Take off.
6.	Pickup member (5) and shaft (2)	Cable (3)	Take out.
7.	Shaft (2)	Cotter pin (8)	Using slip-joint pliers, straighten and pull out.
8.	Carrier body (1)	Shaft (2)	Take off.
9.	Pawl (9) and carrier body (1)	Rivet (10)	Using 1/2-inch hand cold chisel and ball-peen hammer, cut inside head off and take out.
10.	Carrier body (1)	Pawl (9)	Take off.
11.		Pawl (9)	Put in place.
12.		Rivet (10)	a. Put in place. b. Lay head of rivet (10) attached to carrier body (1) on hard surface. c. Using ball-peen hammer, peen head.
13.	Carrier body (1)	Shaft (2)	Put in place.
14.	Shaft (2)	Cotter pin (8)	Put in place, and using slip-joint pliers, bend back.
15.	Pickup member (5) and shaft (2)	Cable (3)	Put in place.
16.	Pickup member (5)	Two U-bolts (4)	Put in place.
17.	Two U-bolts (4) and pickup member (5)	Four lockwashers (7) and nuts (6)	Screw in, and tighten using 7/16-inch socket and ratchet handle with 1/2-inch drive.

SPARE TIRE AND WHEEL CARRIER - CONTINUED

LOCATION	ITEM	ACTION **REMARKS**
INSTALLATION		
18. Frame members (11)	Carrier body (1)	Put in place.
19. Carrier body (1) and frame member (11)	Four screws (12) and nuts (13)	With aid of assistant, screw in, and tighten using 15/16-inch socket, 6-inch extension, ratchet handle with 1/2-inch drive, and 15/16-inch box-end wrench.

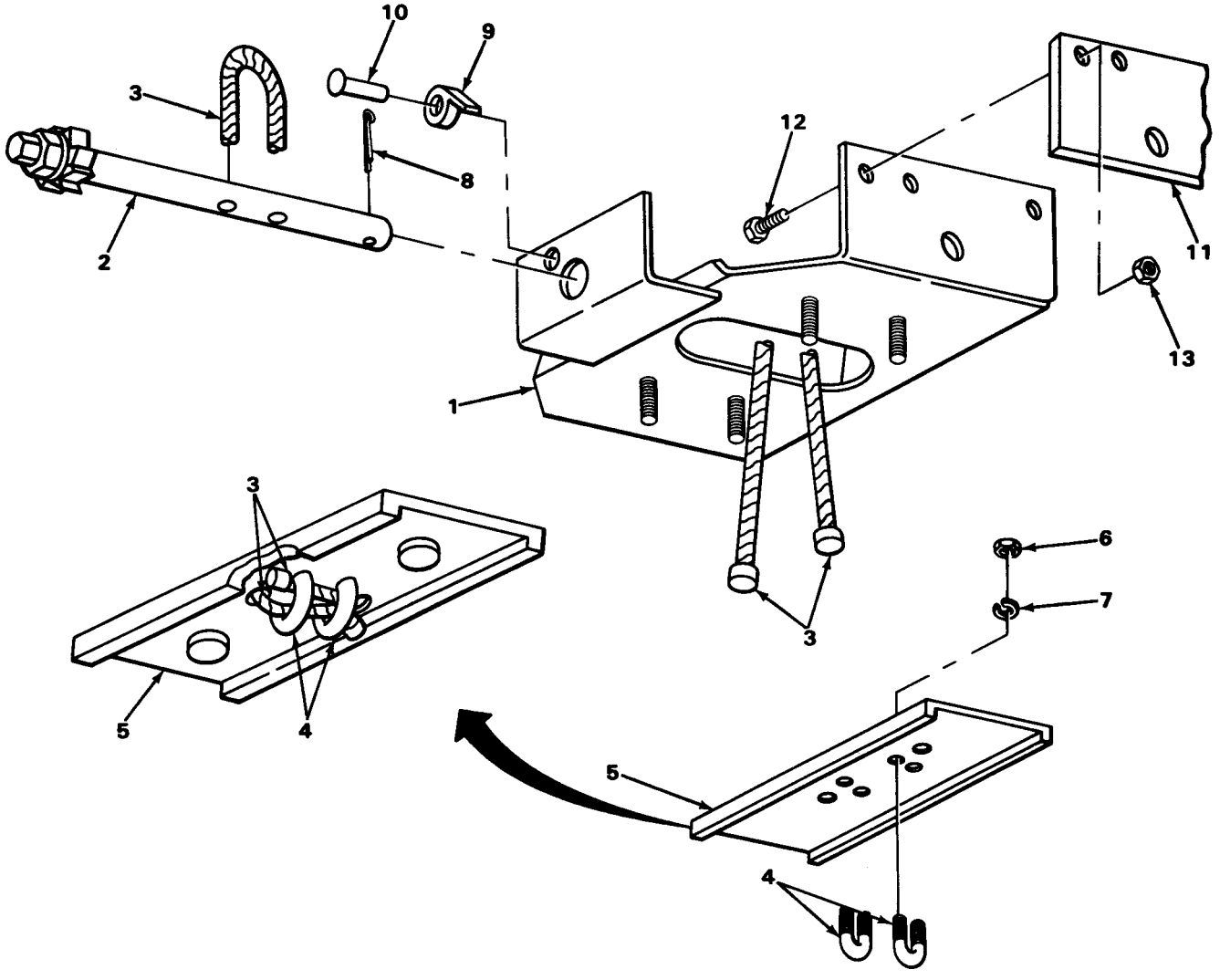

NOTE

FOLLOW-ON MAINTENANCE: Install spare tire and wheel (page 4-148.5).

TASK ENDS HERE

TA231306

LANDING GEAR SHOE

This task covers:

a. Removal (page 4-152)
b. Installation (page 4-153)

INITIAL SETUP

Tools	Personnel Required
Driftpin, brass, 5/8-inch Hammer, hand, ball-peen, 2-lb Handle, ratchet, 1/2-inch drive Socket, 1/2-inch drive, 3/4-inch Trestle, motor vehicle, 10-ton Wrench, box-end, 3/4-inch	One

LOCATION	ITEM	ACTION REMARKS

NOTE

Both landing gear shoes are removed and installed the same way. This task is for one; repeat for the other.

REMOVAL

1.		Semitrailer (1)	Place trestle under middle of semitrailer brace between landing legs.
2.	Shaft (2)	Crank (3)	Turn clockwise just until weight is taken off shoe (4).
3.	Shoe (4) and pin (5)	Screw (6), nut (7), and two washers (8)	Using 3/4-inch socket, ratchet handle with 1/2-inch drive, and 3/4-inch box-end wrench, unscrew and take off.
4.	Shoe (4) and leg (9)	Pin (5)	Using ball-peen hammer and 5/8-inch brass drift, drive out.

LANDING GEAR SHOE - CONTINUED

LOCATION	ITEM	ACTION **REMARKS**
REMOVAL - CONTINUED		
5. Shaft (2)	Crank (3)	Turn clockwise until leg (9) clears shoe (4).
6. Leg (9)	Shoe (4)	Slide out.
INSTALLATION		
7.	Shoe (4)	Put in place under leg (9).
8. Shaft (2)	Crank (3)	Turn counterclockwise until leg (9) and shoe (4) holes line up.
9. Shoe (4) and leg (9)	Pin (5)	Using ball-peen hammer and 5/8-inch brass driftpin, tap in place.
10. Shoe (4) and pin (5)	Screw (6), nut (7), and two washers (8)	Screw in, and tighten using 3/4-inch socket, ratchet handle with 1/2-inch drive, and 3/4-inch box-end wrench.
11. Shaft (2)	Crank (3)	Turn counterclockwise until weight is taken off trestle.
12.	Semitrailer (1)	Remove trestle.

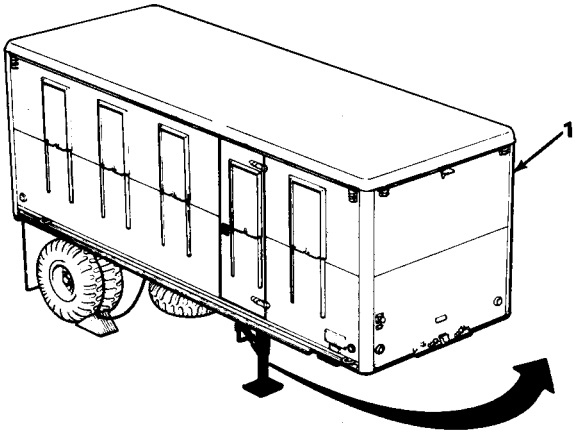

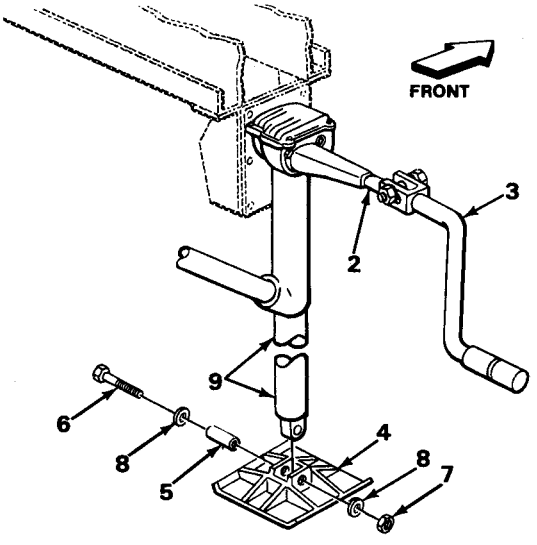

TASK ENDS HERE

TA231307

LANDING GEAR HANDCRANK

This task covers:

a. Removal (page 4-154)
b. installation (page 4-154)

INITIAL SETUP

Tools	Personnel Required
Handle, ratchet, 1/2-inch drive Socket, 1/2-inch drive, 9/16-inch Wrench, box-end, 9/16-inch	One

LOCATION	ITEM	ACTION **REMARKS**

NOTE

Both landing gear handcranks are removed and installed the same way. This task is for one; repeat for the other.

REMOVAL

1. Shaft (1) and crank (2)	Screw (3), nut (4), and two washers (5)	Using 9/16-inch socket, ratchet handle with 1/2-inch drive, and 9/16-inch box-end wrench, unscrew and take out.
2. Shaft (1)	Crank (2)	Take off.

INSTALLATION

3.	Crank (2)	Put on.
4. Shaft (1) and crank (2)	Screw (3), nut (4), and two washers (5)	Screw in, and tighten using 9/16-inch socket, ratchet handle with 1/2-inch drive, and 9/16-inch box-end wrench.

LANDING GEAR HANDCRANK - CONTINUED

INSTALLATION - CONTINUED

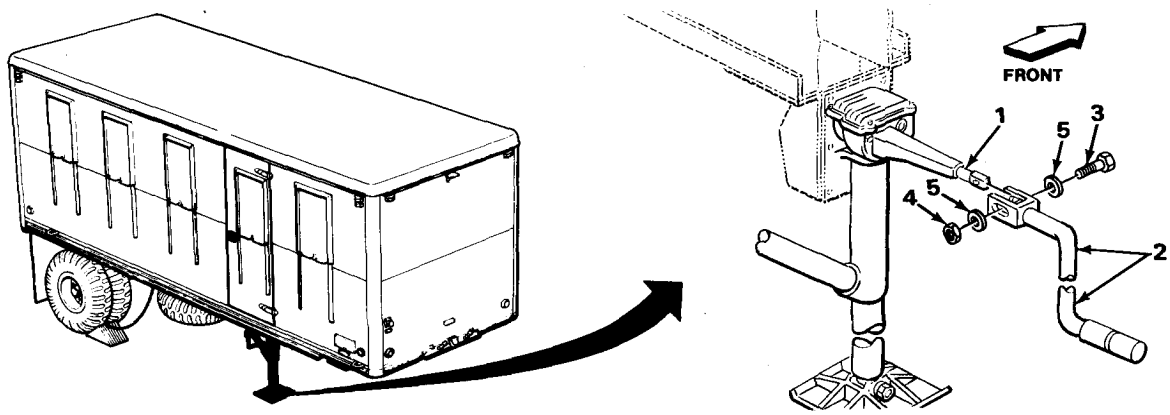

TASK ENDS HERE

Section XII. BODY MAINTENANCE

SPLASH GUARDS

This task covers:

a. Removal (page 4-156)
b. Installation (page 4-156)

INITIAL SETUP

Tools

Handle, ratchet, 1/2-inch drive
Pliers, slip-joint
Socket, 1/2-inch drive, 7/16-inch
Wrench, box-end, 7/16-inch

Personnel Required

One

TA231308

SPLASH WARDS - CONTINUED

LOCATION	ITEM	ACTION **REMARKS**

NOTE

Both splash guards are removed and installed the same way. This task is for one; repeat for the other.

REMOVAL

1. Bracket(1), splash guard (2), and plate (3)	Four screws (4), lockwashers (5), and nuts (6)	Using 7/16-inch socket, ratchet handle with 1/2-inch drive, and 7/16-inch box-end wrench, unscrew and take off.
2. Bracket (1)	Splash guard (2) and plate (3)	Take off, and separate.
3.	Two cotter pins (7)	Using slip-joint pliers, straighten and take out.
4. Frame members (8)	Bracket (1)	Slide in, and take out.

INSTALLATION

5.	Bracket (1)	Slide into place.
6. Bracket (1)	Two cotter pins (7)	Put in, and using slip-joint pliers, bend back.
7.	Splash guard (2) and plate (3)	a. Put together. b. Put in place.
8. Bracket (1), splash guard (2), and plate (3)	Four lock-washers (5), screws (4), and nuts (6)	Screw in, and tighten using 7/16-inch socket, ratchet handle with 1/2-inch drive and 7/16-inch box-end wrench.

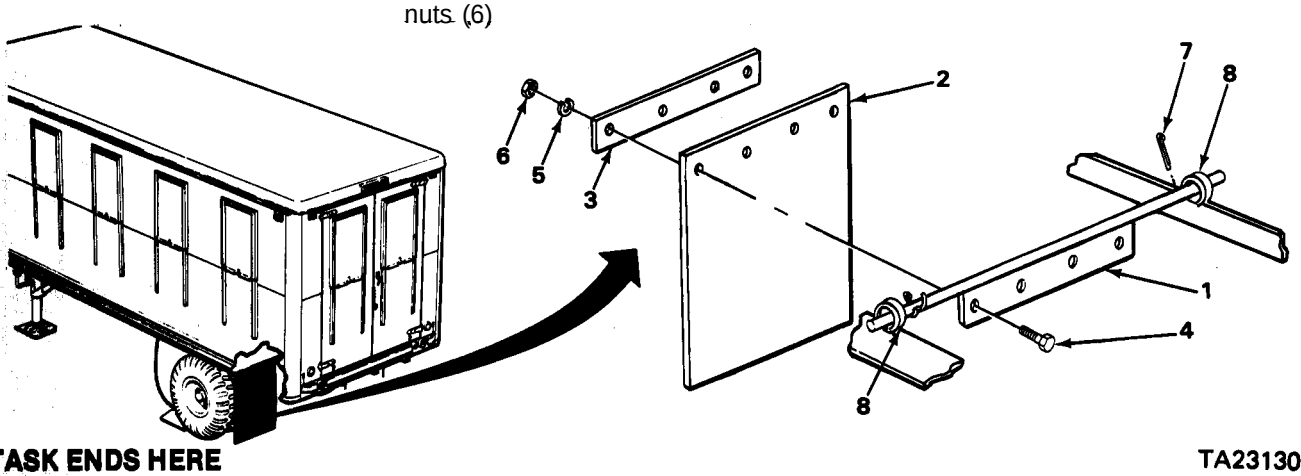

TASK ENDS HERE

TA231309

WINDOWS

This task covers:

a. Removal (page 4-157)
b. Disassembly (page 4-158)
c. Assembly (page 4-159)
d. Installation (page 4-160)

INITIAL SETUP

Tools

Hammer, ball-peen, 2-lb
Knife, putty
Pliers, long round-nose
Pliers, slip-joint
Screwdriver, cross-tip, number two
Screwdriver, flat-tip, 1/8-inch
Screwdriver, flat-tip, 3/16-inch
Stepladder (two required)

Materials/Parts

Adhesive, (item 1, appendix E)
Brush, acid swabbing (item 4, appendix E)
Rags, wiping (item 16, appendix E)
Solvent, drycleaning, PD-680 (item 18, appendix E)

Personnel Required

Two

LOCATION	ITEM	ACTION **REMARKS**

NOTE

All windows are maintained the same way. This task is for one; repeat for the others.

REMOVAL

1. Handle (1)	Clip (2)	Using slip-joint pliers, bend and take off.
2. Window assembly (3) inside latch (4), and screen (5)	Handle (1)	a. Release latch (4), and hold. b. Have assistant lift window (3) up until handle (1) clears screen (5). c. Let handle (1) hang vertically, and swing window (3) down.

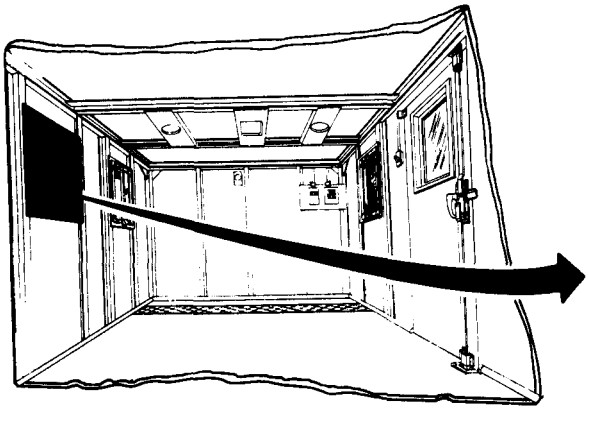

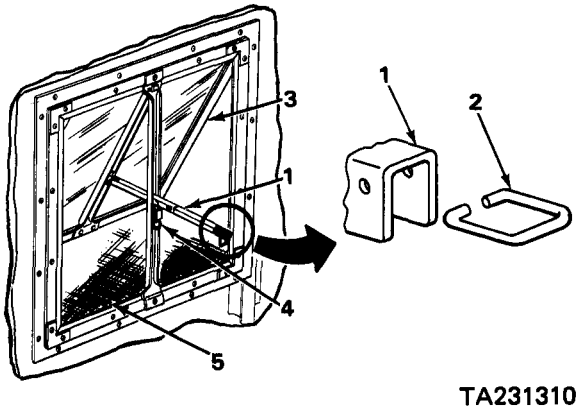

TA231310

WINDOWS - CONTINUED

LOCATION	ITEM	ACTION **REMARKS**
REMOVAL - CONTINUED		
3. Window assembly (1) and hinge (2)	Screw (3)	Using 1/8-inch flat-tip screwdriver, unscrew and take off.
4. Hinge (2)	Window (1)	With aid of assistant, swing open part way, and tap out of hinge (2) with ball-peen hammer.
5. Hinge (2) and van body (4)	Six screws (5)	Using number two cross-tip screwdriver, unscrew and take off.
6. Van body (4)	Hinge (2)	Take off,

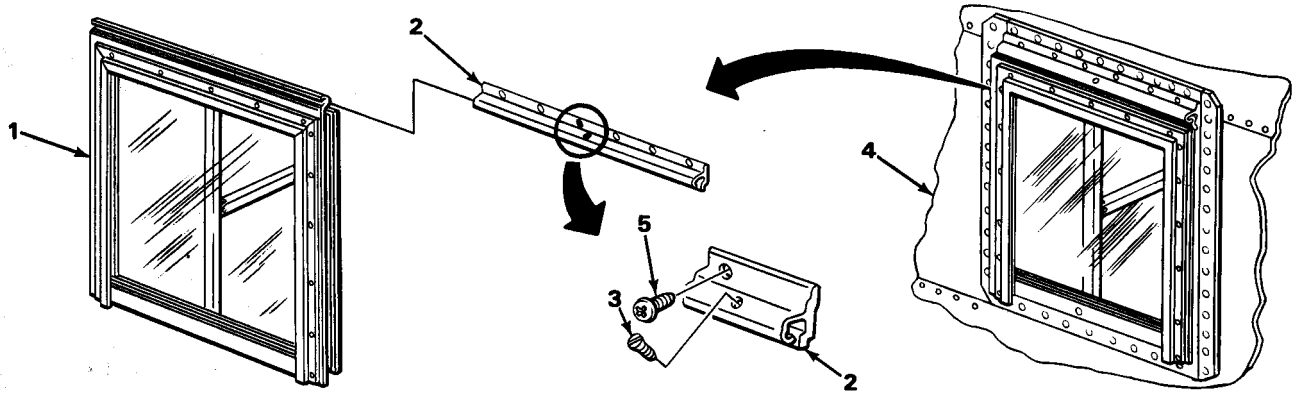

DISASSEMBLY		
7. Handle bracket (6) **and** window frame (7)	Four screws (8)	Using 3/16-inch flat-tip screwdriver, unscrew and take off.
8. Window frame (7)	Handle bracket (6)	Take off.
9. Blackout brackets (9) and window frame (7)	17 screws (10)	Using 3/16-inch flat-tip screwdriver, unscrew and take off.
10. Window frame (7)	Blackout brackets (9)	Take off.
11.	26 screws (11)	Using 3/16-inch flat-tip screwdriver, unscrew and take off.
12.	Eight spacers (12)	Using 3/16-inch flat-tip screwdriver, pry out.

TA231311

WINDOWS - CONTINUED

LOCATION	ITEM	ACTION **REMARKS**
DISASSEMBLY - CONTINUED		
13.	Weather stripping (13)	Using putty knife, scrape off.

WARNING

Drycleaning solvent PD-680 is both toxic and flammable. Avoid prolonged breathing of vapors, and avoid skin contact. Use only in well-ventilated area, and keep away from open flame or excessive heat. Injury to personnel could occur.

14.	Window frame (7)	a. Using PD-680 drycleaning solvent and brush, clean area for stripping (13). b. Wipe with rag, and let dry.
15.	Air fitting (14) and screw (15)	a. Using 3/16-inch flat-tip screwdriver, unscrew screw (15), and take off. b. Using long round-nose pliers, pull out air fitting (14).
ASSEMBLY		
16.	Air fitting (14) and screw (15)	a. Put fitting (14) in place using long round-nose pliers. b. Screw screw (15) into fitting (14), and tighten using 3/16-inch flat-tip screwdriver.

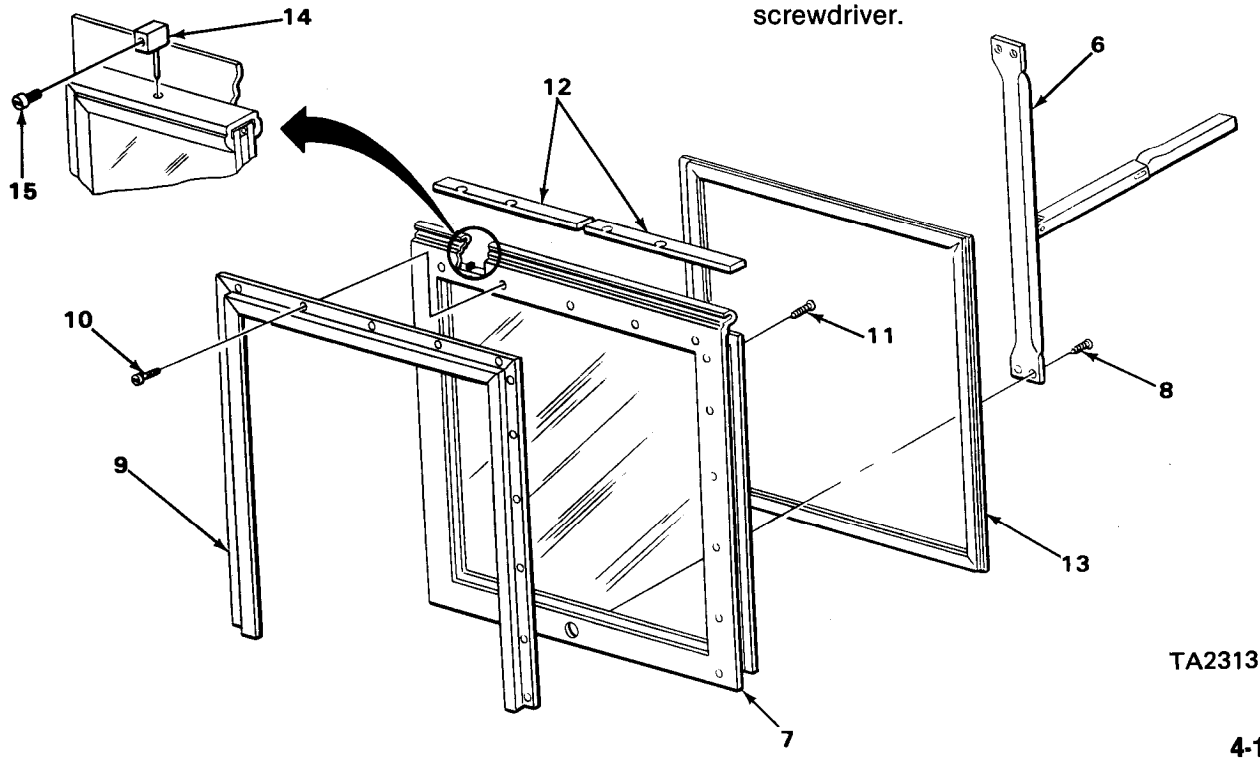

TA231312

WINDOWS - CONTINUED

	LOCATION	ITEM	ACTION **REMARKS**
ASSEMBLY - CONTINUED			
17.	Window frame (1)	Weather stripping (2)	a. Put adhesive on frame (1), and let dry until tacky. b. Put weather stripping (2) in place, and push down until fully seated all around. c. Let dry.
18.		Eight spacers (3)	Put in place.
19.		26 screws (4)	Screw in, and tighten using 3/16-inch fiat-tip screwdriver.
20.		Blackout brackets (5)	Put in place.
21.	Blackout brackets (5) and window frame (1)	17 screws (6)	Screw in, and tighten using 3/16-inch flat-tip screwdriver.
22.	Window frame (1)	Handle bracket (7)	Put in place.
23.	Handle bracket (7) and window frame (1)	Four screws (8)	Screw in, and tighten using 3/16-inch flat-tip screwdriver.
INSTALLATION			
24.	Van body (9)	Hinge (10)	Put in place.
25.	Hinge (10) and van body (9)	Six screws (11)	Screw in, and tighten using number two cross-tip screwdriver.
26.	Hinge (10)	Window assembly (12)	With aid of assistant, hold assembly (2) at an angle, and using ball-peen hammer, tap into hinge (10).
27.	Window assembly (12) and hinge (10)	Screw (13)	Screw in, and tighten using 1/8-inch fiat-tip screwdriver.
28.	Window assembly (12) inside latch (14), and screen (15)	Handle (16)	a. Release latch (14), and hold. b. Have assistant lift window (12) up and feed handle (16) through screen (15) opening over latch (14).
29.	Handle (16)	Clip (17)	Using slip-joint pliers, bend in place.

WINDOWS - CONTINUED

INSTALLATION - CONTINUED

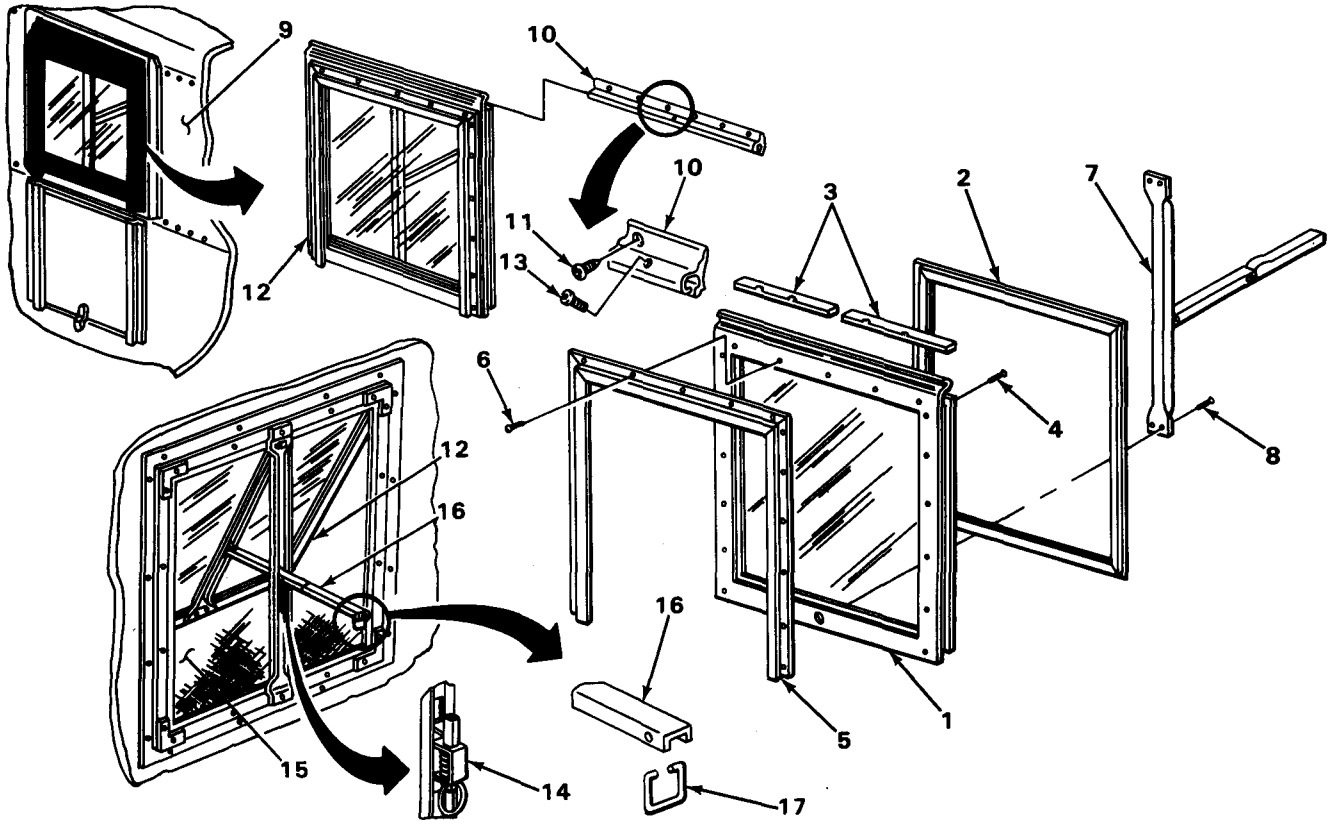

TASK ENDS HERE

BLACKOUT PANELS

This task covers:

a. Removal (page 4-162)
b. Installation (page 4-162)

INITIAL SETUP

Tools

Screwdriver, cross-tip, number two
Screwdriver, flat-tip, 3/16-inch
Stepladder
Wrench, adjustable, 8-inch

Personnel Required

One

Equipment Condition

Insulation removed as necessary (page 4-173).

TA231313

BLACKOUT PANELS - CONTINUED

LOCATION	ITEM	ACTION **REMARKS**

NOTE

All panels are removed and installed the same way. This task is for one; repeat for the others.

REMOVAL

1. Lower corners of two brackets (1)	Two screws (2), flat washers (3), lockwashers (4), and nuts (5)	Using number two cross-tip screwdriver and 8-inch adjustable wrench, unscrew and take off.
2.	Panel (6)	Slide out.
3. Panel (6)	Four strips (7)	Take off.
4. Two brackets (1) and van body (8)	Eight screws (9), flat washers (10), lockwashers (11), and nuts (12)	Using number two cross-tip screwdriver and 8-inch adjustable wrench, unscrew and take off.
5. Van body (8)	Two brackets (1)	Take off.

INSTALLATION

6.	Two brackets (1)	Put in place.
7. Two brackets (1) and van body (8)	Eight screws (9), flat washers (10), lockwashers (11), and nuts (12)	Screw in, and tighten using number two cross-tip screwdriver and 8-inch adjustable wrench.
8. Panel (6)	Four strips (7)	Put in place.
9. Two brackets (1)	Panel (6)	Slide in place.
10.	Two screws (2), flat washers (3), lockwashers (4), and nuts (5)	Screw in, and tighten using number two cross-tip screwdriver and 8-inch adjustable wrench.

BLACKOUT PANELS - CONTINUED

INSTALLATION - CONTINUED

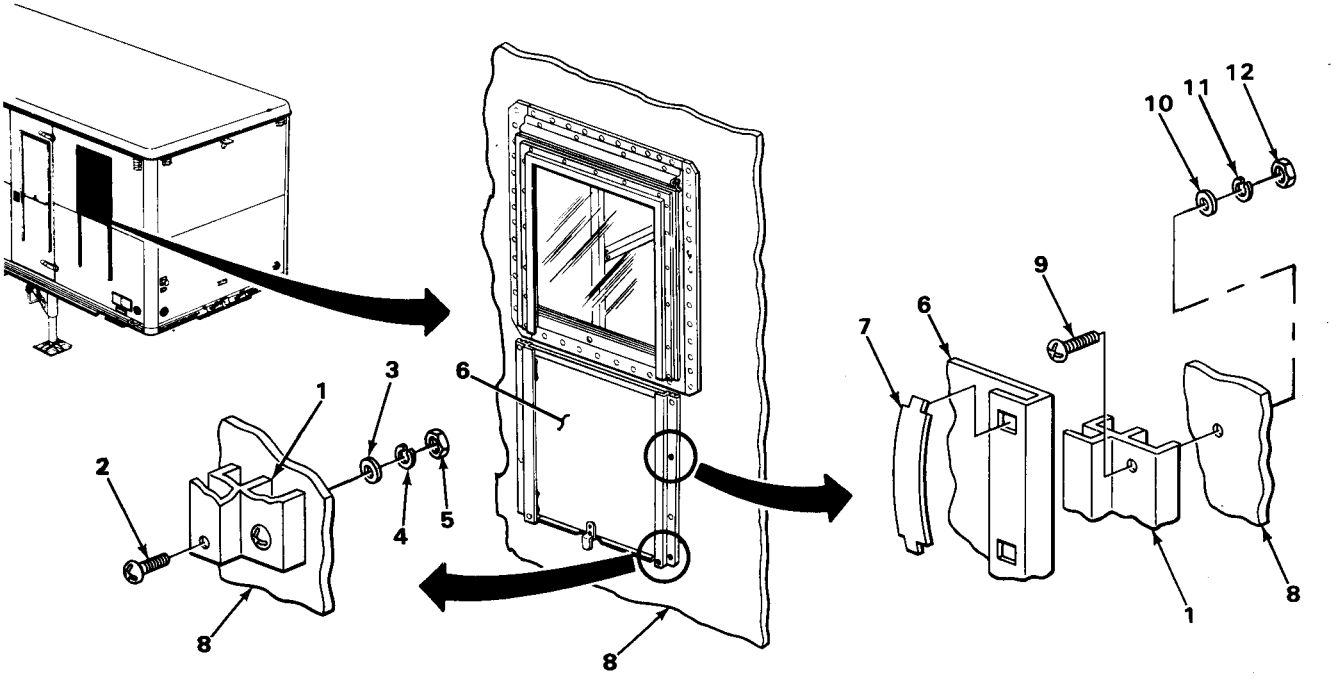

NOTE

FOLLOW-ON MAINTENANCE: Install insulation as necessary (page 4-173).

TASK ENDS HERE

SCREENS

This task covers:

a. Removal (page 4-164)
b. Installation (page 4-164)

INITIAL SETUP

Tools

Hammer, hand, ball-peen, 2-lb
Pliers, slip-joint
Punch, drive-pin, 1/8-inch
Punch, drive-pin, 3/16-inch
Screwdriver, cross-tip, number two
Screwdriver, flat-tip, 3/16-inch

Tools - Continued

Stepladder

Personnel Required

One

TA231314

SCREENS - CONTINUED

LOCATION	ITEM	ACTION **REMARKS**

NOTE

All screens are removed and installed the same way. This task is for one, repeat for the others.

REMOVAL

1. Latch bracket (1)	Window handle (2)	Release handle (2) from bracket (1) by pulling up on clip (3).
2. Window handle (2)	Clip (3)	Using slip-joint pliers, spread and take off.
3. Latch bracket (1) and screen frame (4)	18 screws (5)	Using number two cross-tip screwdriver, unscrew and take off.
4. Four wall brackets (6)	Screen frame (4)	Release latch (7), and take off.
5. Four wall brackets (6) and paneling (8)	16 screws (9)	Using number two cross-tip screwdriver, unscrew and take off.
6.	26 rivets (10)	a. Using 1/8-inch drive-pin punch and ball-peen hammer, drive punch through center of rivet head (10) with a solid blow of hammer. b. Rivet heads (10) will either fall off or can be lifted off with 3/16-inch flat-tip screwdriver.
7. Paneling (8)	Four wall brackets (6)	Take off.

INSTALLATION

8.	Four wall brackets (6)	Put in place.
9. Four wall brackets (6) and paneling (8)	26 rivets (10)	a. Fill each hole with a rivet (10). **Make sure rivet is fully seated.** b. Using 3/16-inch punch and ball-peen hammer, drive pin (11) flush with head of rivet (10).

SCREENS - CONTINUED

LOCATION	ITEM	ACTION **REMARKS**
INSTALLATION - CONTINUED		
10. Four wall brackets (6) and paneling (8)	16 screws (9)	Screw in, and tighten using number two cross-tip screwdriver.
11. Four wall brackets (6)	Screen frame (4)	Release latch (7), and put in place.
12. Screen frame (4) and four wall brackets (6)	18 screws (5)	Screw in, and tighten using number two cross-tip screwdriver.
13. Window handle (2)	Clip (3)	Using slip-joint pliers, put in place.
14. Latch bracket (1)	Window handle (2)	Connect handle (2) to bracket (1) and hook clip (3).

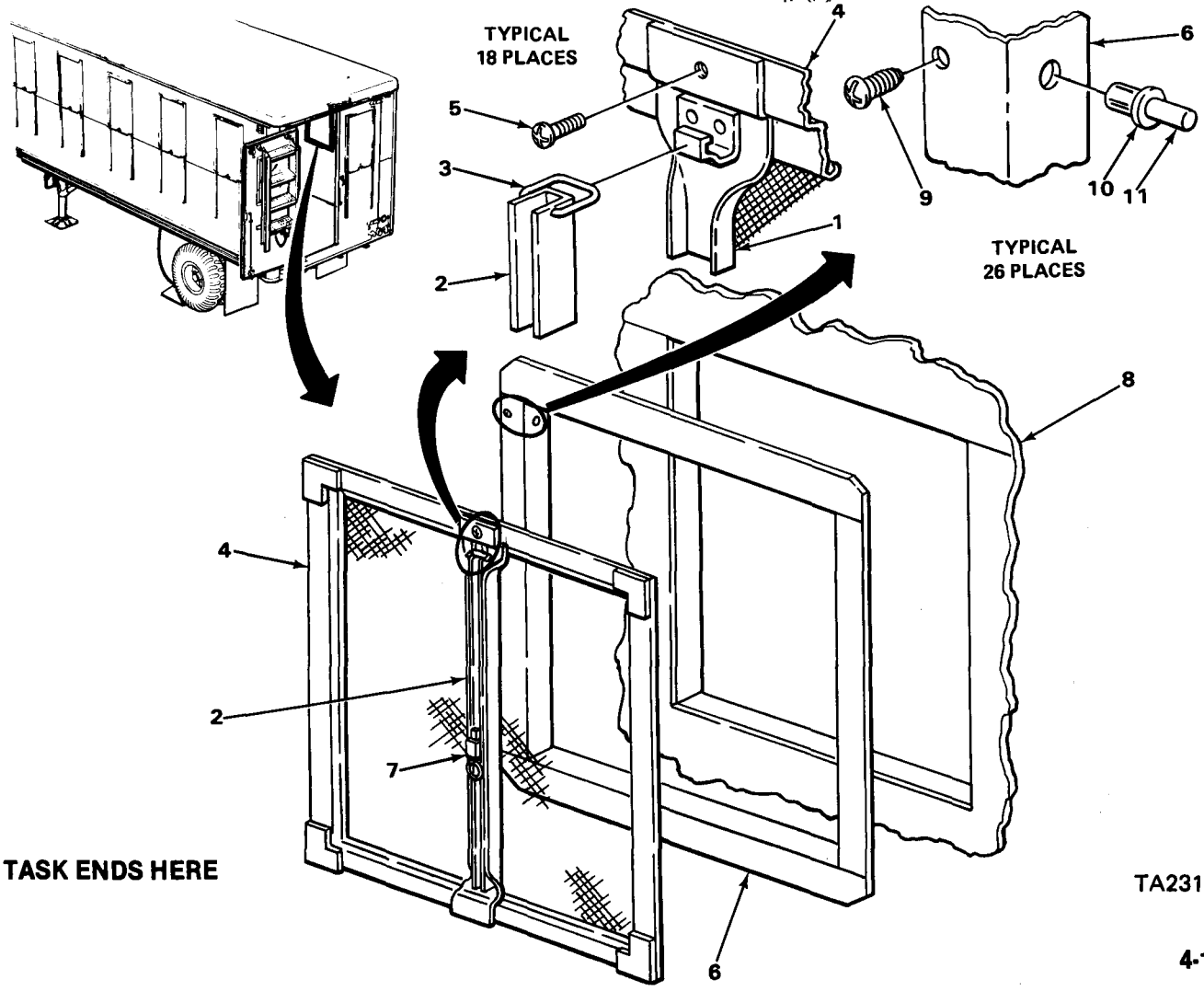

TASK ENDS HERE

TA231315

DOORS

This task covers:

a. Removal (page 4-166)
b. Installation (page 4-168)

INITIAL SETUP

Tools

Bar, pry
Hammer, hand, ball-peen, 2-lb
Handle, ratchet, 1/2-inch drive
Knife, putty
Screwdriver, cross-tip, number two
Screwdriver, fiat-tip, 3/16-inch
Socket, 1/2-inch drive, 1/2-inch
Wrench, box-end, 1/2-inch

Materials/Parts

Adhesive (item 1, appendix E)
Brush, acid swabbing (item 4, appendix E)

Materials/Parts - Continued

Rags, wiping (item 16, appendix E)
Solvent, drycleaning PD-680 (item 18, (appendix E)

Personnel Required

Two

Equipment Condition

Insulation removed as required (page 4-173).

LOCATION	ITEM	ACTION **REMARKS**
REMOVAL		
1. Two hinges (1) and van body (2)	Six screws (3) and nuts (4)	With aid of assistant, and using 1/2-inch socket, ratchet handle with 1/2-inch drive, and 1/2-inch box-end wrench, unscrew and take off.
2. Van body (2)	Door (5)	With aid of assistant, open and take off.
3. Top bracket (6) and paneling (7)	Two screws (8)	Using number two cross-tip screwdriver, and unscrew take off. Rear doors have four screws.

DOORS - CONTINUED

LOCATION	ITEM	ACTION **REMARKS**
REMOVAL - CONTINUED		
4. Paneling (7)	Top bracket (6)	Take off.
5. Bottom bracket (9) and deck (10)	Two screws (11)	Using number two cross-tip screwdriver, unscrew and take off.

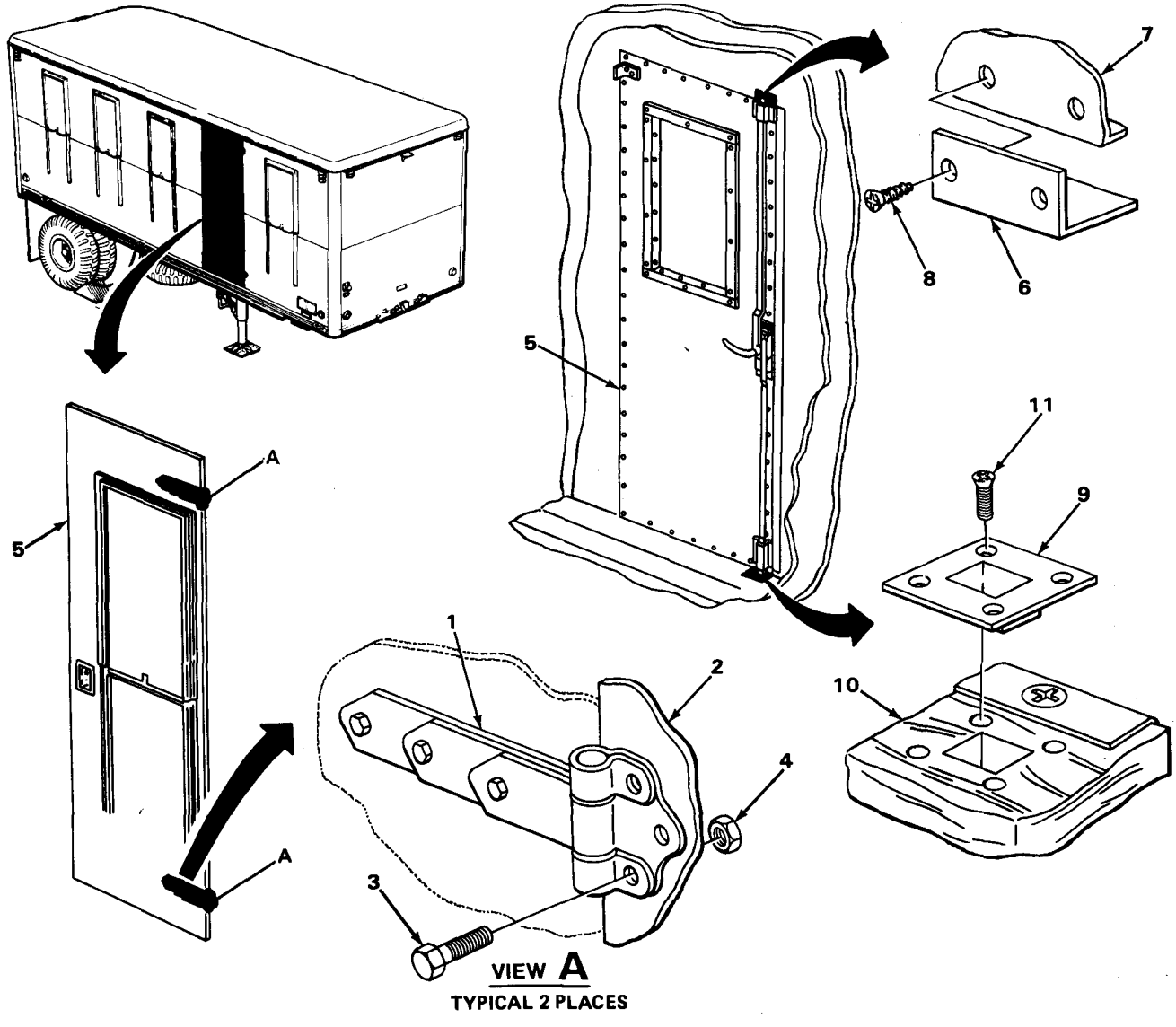

TA231316

DOORS - CONTINUED

LOCATION	ITEM	ACTION **REMARKS**
REMOVAL - CONTINUED		
6. Bottom bracket (1) and deck (2)	Two screws (3)	Using 3/16-inch flat-tip screwdriver, unscrew and take off.
7. Deck (2)	Bottom bracket (1)	Using pry bar, pry off.
8. Van body (4)	Weather-stripping (5)	Using putty knife, scrape off.
INSTALLATION		

WARNING

Drycleaning solvent PD-680 is both toxic and flammable. Avoid prolonged breathing of vapors, and avoid skin contact. Use only in well-ventilated area, and keep away from open frame or excessive heat. Injury to personnel could occur.

9.	Van body (4)	a. Using PD-680 drycleaning solvent and brush, clean area for stripping (5). b. Wipe with rag, and let dry.
10. Van body (4)	Weather-stripping (5)	a. Put adhesive on van body (4) door opening, and let dry until tacky. b. Put stripping (5) in place, and push down until fully seated all around. c. Let dry.
11. Deck (2)	Bottom bracket (1)	Using ball-peen hammer, tap in place,
12. Bottom bracket (1) and deck (2)	Two screws (3)	Screw in, and tighten using 3/16-inch flat-tip screwdriver.
13.	Two screws (6)	Screw in, and tighten using number two cross-tip screwdriver.
14. Paneling (7)	Top bracket (8)	Put in place.
15. Top bracket (8) and paneling (7)	Two screws (9)	Screw in, and tighten using number two cross-tip screwdriver. **Rear doors have four screws.**

DOORS - CONTINUED

LOCATION	ITEM	ACTION **REMARKS**
INSTALLATION - CONTINUED		
16. Van body (4)	Door(10)	With aid of assistant, put in place in closed position. **Make sure hinge and van body holes line up.**
17. Two hinges (11) and van body (4)	Six screws (12) and nuts (13)	With aid of assistant, screw in, and tighten using 1/2-inch socket, ratchet handle with 1/2-inch drive, and 1/2-inch box-end wrench.

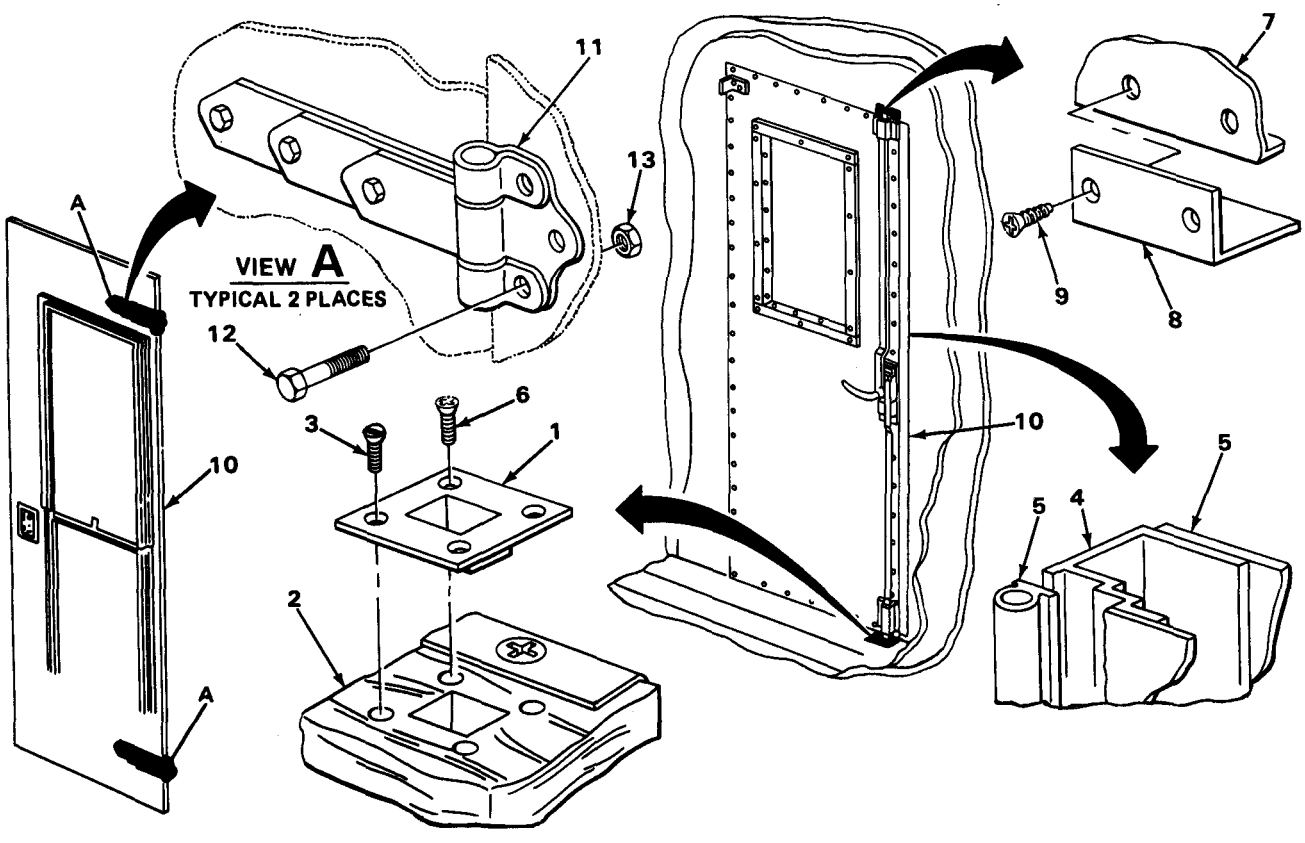

NOTE

FOLLOW-ON MAINTENANCE: Install insulation (page 4-173).

TASK ENDS HERE

TA231317

CABLE BOX

This task covers:

Repair (page 4-170)

INITIAL SETUP

Tools

Drill, electric, portable, 1/2-inch
Drill, twist, 3/16-inch
Knife, putty
Riveter, hand
Screwdriver, offset, cross-tip, number two
Wrench, adjustable, 12-inch

Materials/Parts

Adhesive (item 1, appendix E)

Materials/Parts - Continued

Brush, acid swabbing (item 4, appendix E)
Rags, wiping (item 16, appendix E)
Rivets (six required)
Solvent, drycleaning, PD-680 (item 18, appendix E)

Personnel Required

One

LOCATION	ITEM	ACTION **REMARKS**
REPAIR		
1. Box (1), hasp (2), and latch (3)	Hook (4) and lid (5)	a. Take hook (4) off latch (3). b. Open hasp (2) and lid (5).
2. Chain (6) and box (1)	Screw (7), washer (8), lockwasher (9) and nut (10)	Using number two offset cross-tip screwdriver and 12-inch adjustable wrench, unscrew and take off.
3. Box (1)	Chain (6) with hook (4)	Take off.
4. Hasp (2) and lid (5)	Two rivets (11)	Using 3/16-inch twist drill and 1/2-inch portable drill, drill out.
5. Lid (5)	Hasp (2)	Take off.
6. Latch (3) and box (1)	Four rivets (12)	Using 3/16-inch twist drill and 1/2-inch portable drill, drill out.
7. Box (1)	Latch (3)	Take off.
8. Lid (5)	Four strips (13)	Using putty knife, scrape off.

CABLE BOX - CONTINUED

LOCATION	ITEM	ACTION **REMARKS**
REPAIR - CONTINUED		
	WARNING Drycleaning solvent PD-680 is both toxic and flammable. Avoid prolonged breathing of vapors, and avoid skin contact. Use only in well-ventilated area, and keep away from open flame or excessive heat. Injury to personnel could occur.	
9.	Lid (5)	a. Using PD-680 drycleaning solvent and brush, clean area for strips (13). b. Wipe with rag, and let dry.
10. Lid (5)	Four strips (13)	a. Put adhesive on lid (5). b. Put strips (13) in place.
11. Box (1)	Latch (3)	Put in place.
12. Latch (3) and box (1)	Four rivets (12)	Pop in place using hand riveter.
13. Lid (5)	Hasp (2)	Put in place.
14. Hasp (2) and lid (5)	Two rivets (11)	Pop in place using hand riveter.
15. Box (1)	Chain (6) with hook (4)	Put in place.
16. Chain (6) and box (1)	Washer (8), screw (7), lockwasher (9) and nuts (10)	Screw in, and tighten using number two offset cross-tip screwdriver and 12-inch adjustable wrench.
17. Box (1), hasp (2), and latch (3)	Hook (4) and lid (5)	a. Close lid (5) and hasp (2). b. Put hook (4) in place.

LAMP BOX

This task covers:

a. Removal (page 4-172)
b. Installation (page 4-172)

INITIAL SETUP

Tools

Extension, 3/8-inch drive, 6-inch
Handle, ratchet, 1/4-inch drive
Handle, ratchet, 3/8-inch drive
Screwdriver, cross-tip, number two
Socket, 1/4-inch drive, 7/16-inch

Tools - Continued

Socket, 3/8-inch drive, 7/16-inch
Wrench, box-end, 7/16-inch

Personnel Required

One

LOCATION	ITEM	ACTION **REMARKS**
REMOVAL		
1. Box (1)	Hook clamp (2) and lid (3)	a. Lift and unhook clamp (2). b. Open lid (3).
2. Box (1) and frame member (4)	Three screws (5), lockwashers (6), and nuts (7)	a. Have assistant hold box (1). b. Using 7/16-inch socket, extension, ratchet handle with 3/8-inch drive, and 7/16-inch box-end wrench, unscrew and take off.
3. Frame member (4)	Box (1)	Take off.
4. Hook clamp (2) and box (1)	Two screws (8) and nuts (9)	Using number two cross-tip screwdriver, 3/8-inch socket, and ratchet handle with with 1/4-inch drive, unscrew and take off.
5. Box (1)	Hook clamp (2)	Take off.
INSTALLATION		
6.	Hook clamp (2)	Put in place.
7. Hook clamp (2) and box (1)	Two screws (8) and nuts (9)	Screw in, and tighten using number two cross-tip screwdriver, 3/8-inch socket, and ratchet handle with 1/4-inch drive.
8. Frame member (4)	Box (1)	Put in place.

LAMP BOX - CONTINUED

LOCATION	ITEM	ACTION **REMARKS**
INSTALLATION - CONTINUED		
9. Box (1) and frame member (4)	Three lockwashers (6), screws (5), and nuts (7)	Screw in, and tighten using 7/16-inch socket extension, ratchet handle with 3/8-inch drive, and 7/16-inch box-end wrench.
10. Box (1)	Hook clamp (2) and lid (3)	a. Close lid (3). b. Lift and hook clamp (2).

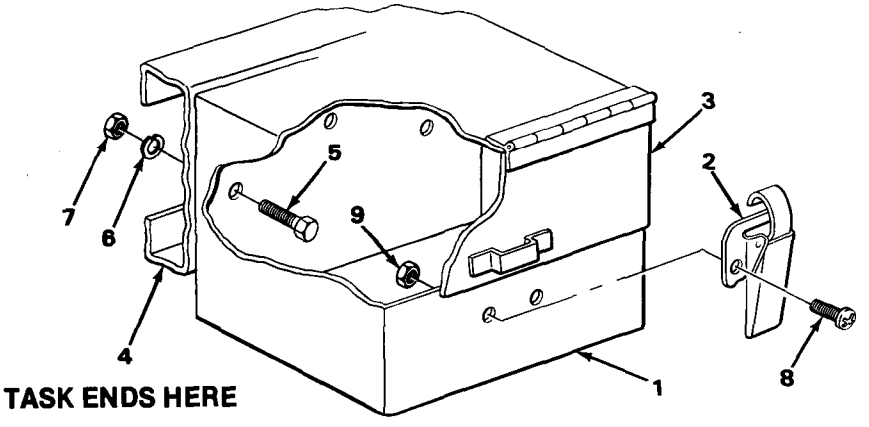

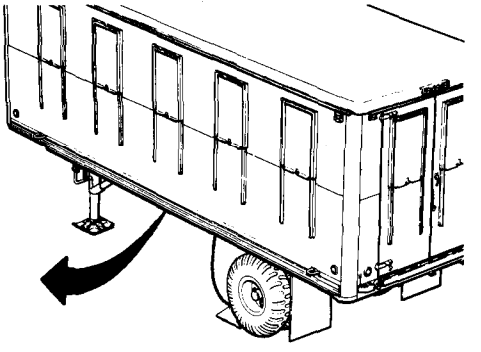

TASK ENDS HERE

INSIDE PANELING AND INSULATION

This task covers:

a. Removal (page 4-174)
b. Installation (page 4-174)

INITIAL SETUP

Tools

Screwdriver, cross-tip, number two

Personnel Required

Two

Equipment Condition

Data plates removed (page 4-186) (where necessary).
Door switches removed (page 4-37) (where necessary).

Equipment Condition - Continued

Inside domelight, 24-volt, removed (page 4-61) (where necessary).
Inside domelight, 110-volt, removed (page 4-67) (where necessary).
Junction boxes removed (page 4-42) (where necessary).
Light switches removed (page 4-35) (where necessary).
Screens removed (page 4-163) (where necessary).
Wall receptacles and base removed (page 4-32) (where necessary).

TA231319

INSIDE PANELING AND INSULATION - CONTINUED

LOCATION	ITEM	ACTION **REMARKS**

NOTE

All paneling and insulation is removed the same way. This task is for one panel and piece of insulation. Repeat this task for the others, noting number of screws and particular equipment condition required.

REMOVAL

1. Molding (1) and panels (2) and (3)	33 screws (4)	Using number two cross-tip screwdriver, unscrew and take off.
2. Panels (2) and (3)	Molding (1)	a. Take off. b. Repeat steps 1 and 2a for other side.
3. Panel (2) and body bows (5)	33 screws (6)	With assistant holding panel (2), and and using number two cross-tip screw-driver, unscrew and take off.
4. Body bows (5)	Panel (2)	Take off.
5.	Insulation (7)	Take off.

INSTALLATION

6.	Insulation (7)	With aid of assistant, put in place, and hold.
7.	Panel (2)	Put in place, and hold.
8. Panel (2) and body bows (5)	33 screws (6)	With aid of assistant, screw in and tighten using number two cross-tip screwdriver.
9. Panels (2) and (3)	Molding (1)	Put in place.
10. Molding (1) and panels (2) and (3)	33 screws (4)	a. Screw in, and tighten using number two cross-tip screwdriver. b. Repeat steps 9 and 10a for other side.

INSIDE PANELING AND INSULATION - CONTINUED

INSTALLATION - CONTINUED

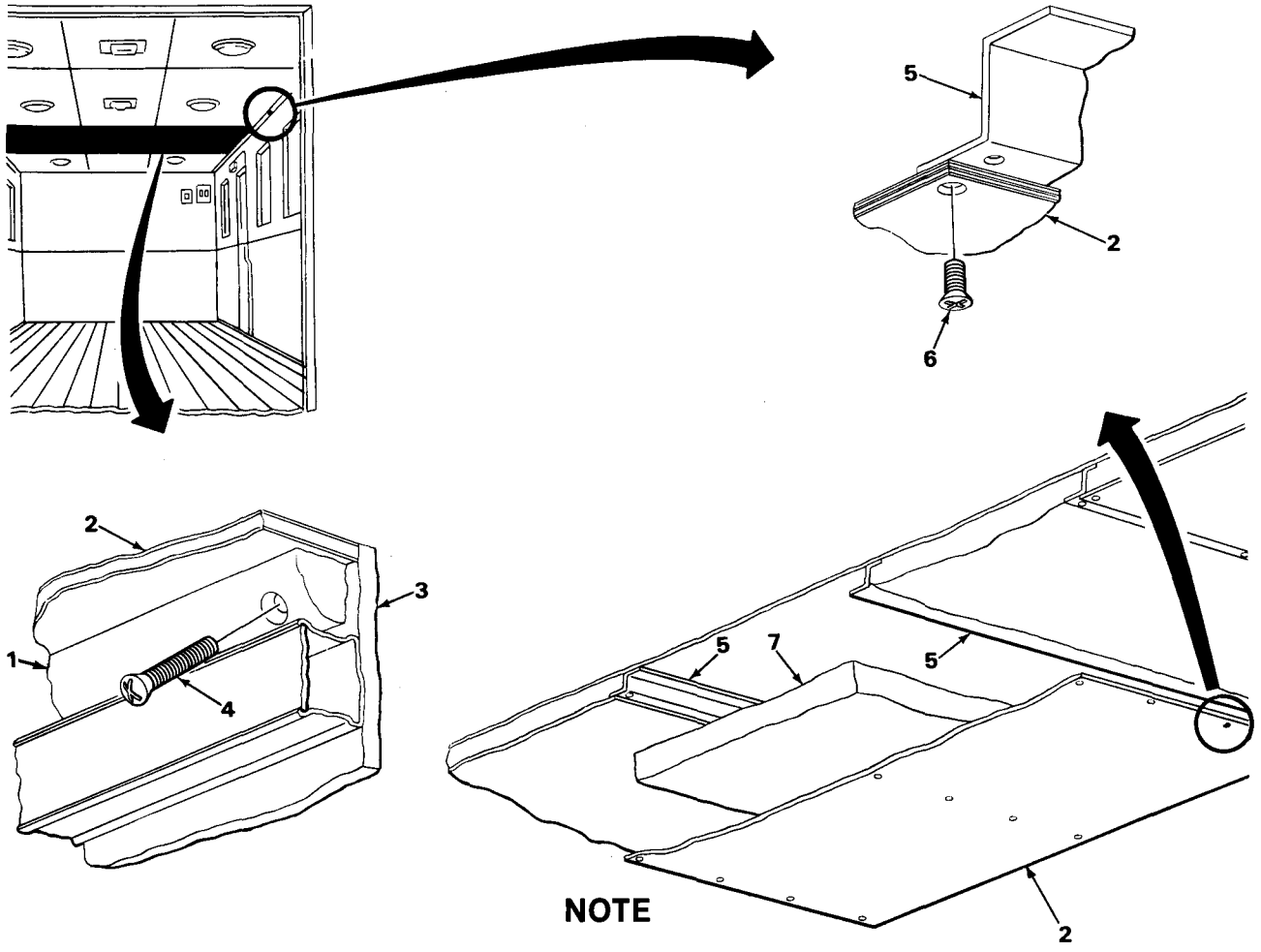

NOTE

FOLLOW-ON MAINTENANCE:

1. Install wall receptacles (page 4-32) (where necessary).
2. Install screens (page 4-163) (where necessary).
3. Install light switches (page 4-35) (where necessary).
4. Install junction boxes (page 4-42) (where necessary).
5. Install inside domelights, 110-volt (page 4-67) (where necessary).
6. Install inside domelights, 24-volt (page 4-61) (where necessary).
7. Install door switches (page 4-37) (where necessary).
8. Install data plates (page 4-186) (where necessary).

TASK ENDS HERE

TA231320

Section XIII. ACCESSORY ITEM MAINTENANCE

REFLECTORS

This task covers:

a. Removal (page 4-176)
b. Installation (page 4-177)

INITIAL SETUP

Tools	Personnel Required
Screwdriver, cross-tip, number two	One

LOCATION	ITEM	ACTION **REMARKS**

REMOVAL

NOTE

All reflectors are removed and Installed the same way. This task is for one; repeat for the others.

1. Reflector (1) and van body (2)	Two screws (3)	Using number two cross-tip screwdriver, unscrew and take off.
2. Van body (2)	Reflector (1)	Take off.

REFLECTORS - CONTINUED

LOCATION	ITEM	ACTION **REMARKS**
INSTALLATION		
3.	Reflector (1)	Put in place.
4. Reflector (1) and van body (2)	Two screws (3)	Screw in, and tighten using number two cross-tip screwdriver.

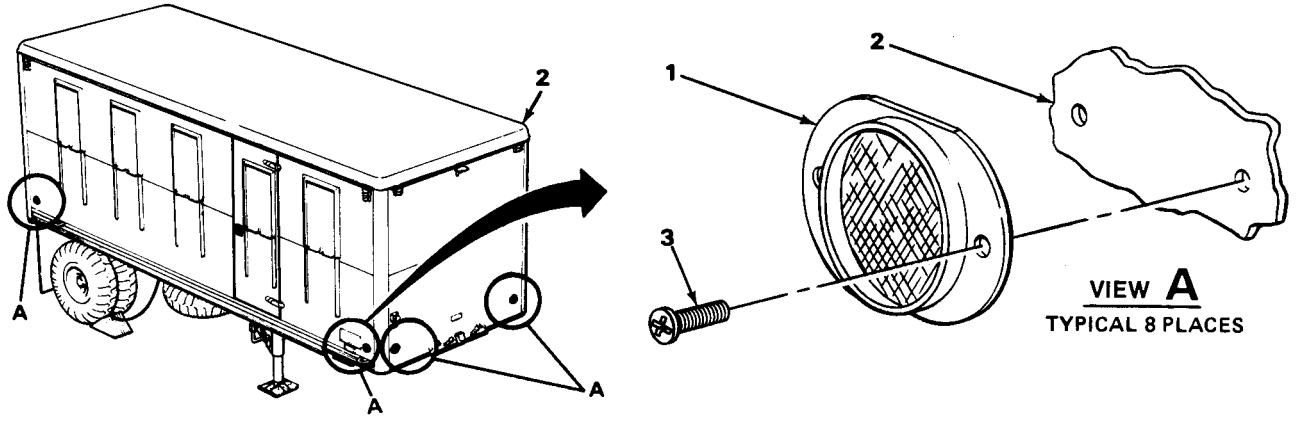

TASK ENDS HERE

TA231321

CHOCK BLOCKS

This task covers:

a. Removal (page 4-178)
b. Installation (page 4-179)

INITIAL SETUP

Tools	Personnel Required
Handle, ratchet, 3/8-inch drive Pliers, diagonal cutting Pliers, slip-joint Screwdriver, cross-tip, number two Socket, 3/8-inch drive, 7/16-inch Welder, arc	Two

LOCATION	ITEM	ACTION **REMARKS**

NOTE

Both chock blocks and their mounting hardware are removed and installed the same way. This task is for one; repeat for the others.

REMOVAL

1. Chain (1) and pin (2)	Clip (3)	Pull out.
2. Pins (2) and (4)	Plate (5)	Pull off pin (2), and let hang down.
3. Frame member (6)	Chain (7)	Take off.
4. Chock block frame (8)	Chock block (9)	Slide out.
5. Pin (4)	Cotter pin (10) and washer (11)	a. Using slip-joint pliers, straighten pin (10) and take out. b. Take off washer (11).
6.	Plate (5)	Take off.
7.	Washer (12) and cotter pin (13)	a. Take off washer (12). b. Using slip-joint pliers, straighten pin (13) and take out.
8. Chain (1)	Clip (3)	Take off.

CHOCK BLOCKS - CONTINUED

LOCATION	ITEM	ACTION **REMARKS**
REMOVAL - CONTINUED		
9. Chock block frame (8) and deck (14)	Four screws (15), lockwashers (16), and nuts (17)	With aid of assistant, and using number two cross-tip screwdriver, 7/16-inch socket, and ratchet handle with 3/8-inch drive, unscrew and take off.
10. Deck (14)	Chock block frame (8)	Take off.
11. Chock block frame (8)	Chain (1)	Using diagonal cutting pliers, cut off.
INSTALLATION		

NOTE

For welding, refer to TM 9-237.

12.	Chain (1)	a. Using slip-joint pliers, put in place next to old chain link. b. Using arc welder, tack weld.
13. Deck (14)	Chock block frame (8)	Put in place.

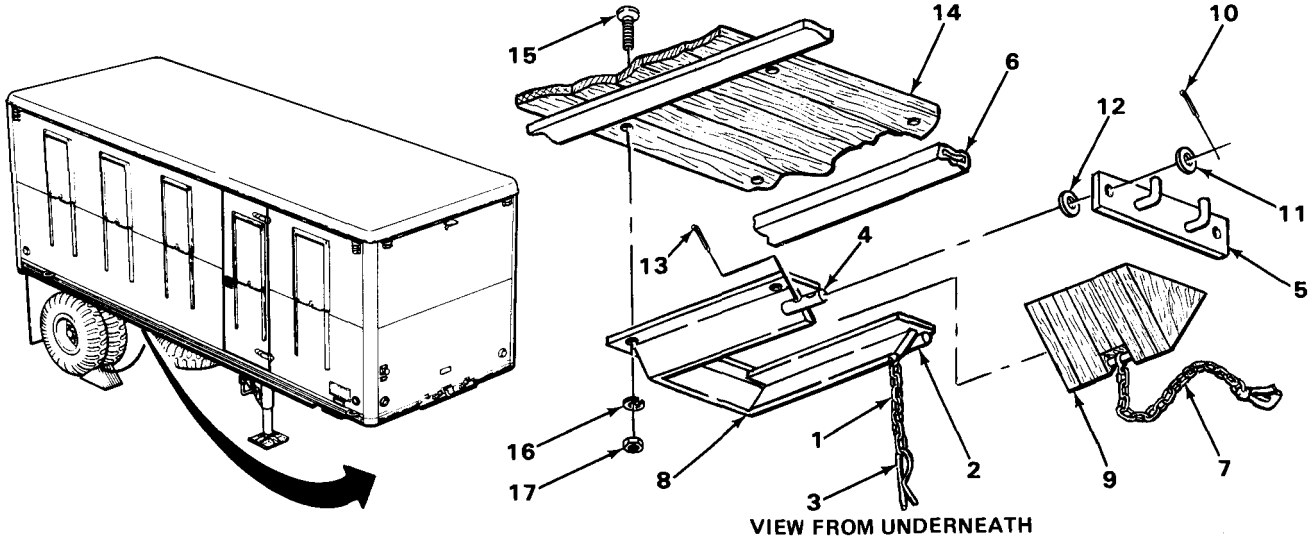

TA231322

CHOCK BLOCKS - CONTINUED

LOCATION	ITEM	ACTION **REMARKS**
INSTALLATION - CONTINUED		
14. Chock block frame (1) and deck (2)	Four lockwashers (3), screws (4), and nuts (5)	With aid of assistant, screw in and tighten using number two cross-tip screwdriver, 7/16-inch socket, and ratchet handle with 3/8-inch drive.
15. Chain (6)	Clip (7)	Put in place.
16. Pin (8)	Cotter pin (9) and washer (10)	a. Put in pin (9), and bend using slip joint pliers. b. Put washer (10) in place.
17.	Plate (11)	Put in place with end on pin (8).
18.	Washer (12) and cotter pin (13)	a. Put washer (12) in place. b. Put in pin (13), and using slip-joint pliers, bend back.
19. Chock block frame (1)	Chock block (14)	Slide in place.
20. Frame member (15)	Chain (16)	Hook.
21. Pins (8) and (17)	Plate (11)	Put in place with end on pin (17).
22. Chain (6) and pin (17)	Clip (7)	Put in place.

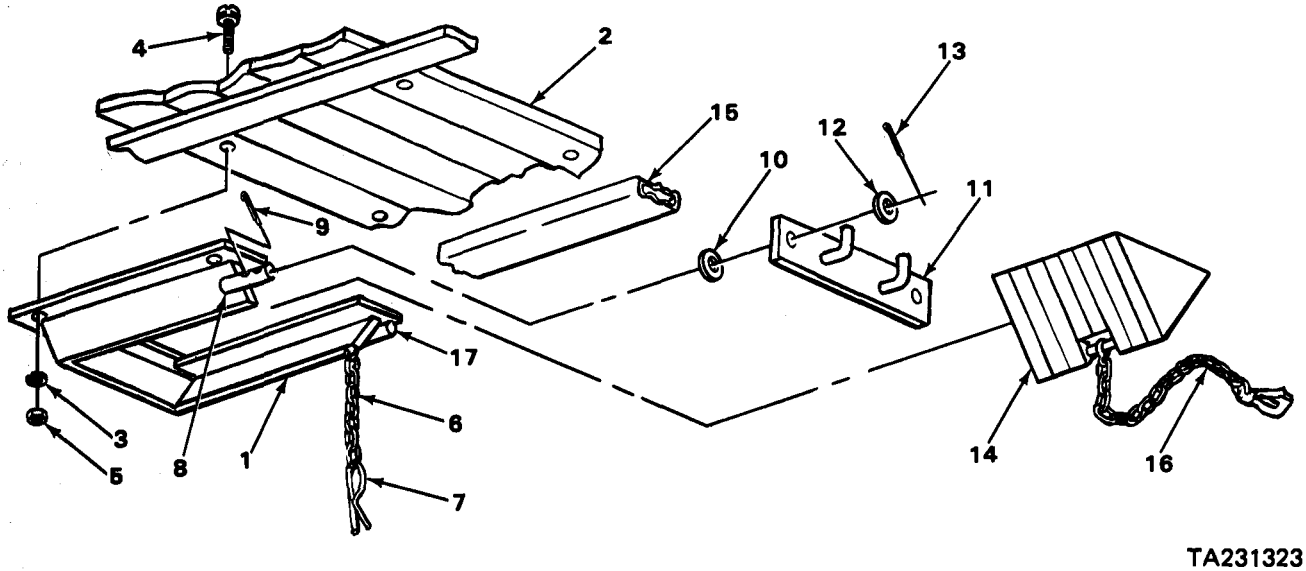

TA231323

CHOCK BLOCKS - CONTINUED

INSTALLATION - CONTINUED

TASK ENDS HERE

MUD PLATES

This task covers:

a. Removal (page 4-181)
b. Installation (page 4-182)

INITIAL SETUP

Personnel Required

One

LOCATION	ITEM	ACTION	REMARKS
		NOTE	
		Both mud plates are removed and installed the same way. This task is for one; repeat for the other.	
REMOVAL			
1. Two brackets (1) and screws (2)	Two wing nuts (3)	Unscrew part way.	

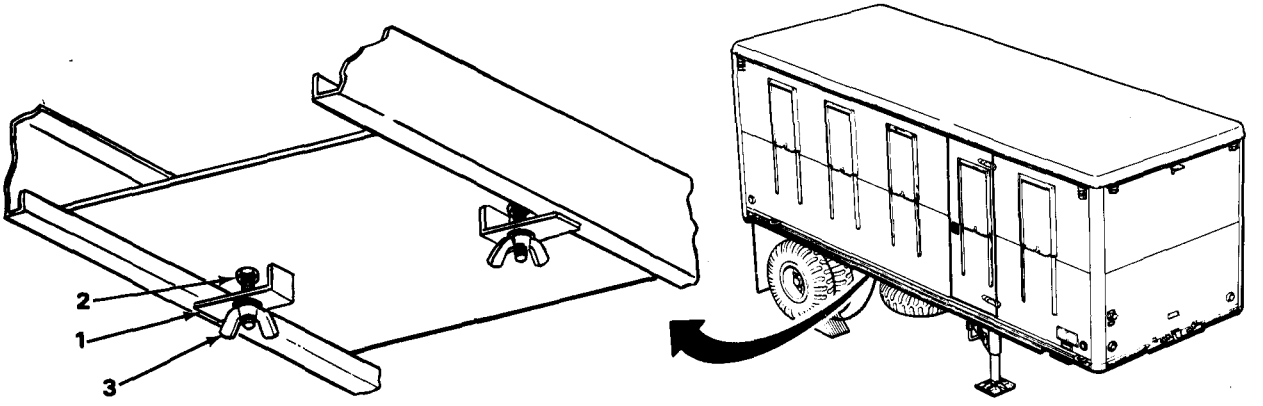

TA231324

MUD PLATES - CONTINUED

LOCATION	ITEM	ACTION **REMARKS**
REMOVAL - CONTINUED		
2. Two frame members (1) and screws (2)	Two brackets (3)	Turn until they are free of frame members (1).
3. Two frame members (1)	Mud plate (4)	Tip one end up, and slide out.
4. Two screws (2)	Two wing nuts (5)	Unscrew, and take off.
5. Two screws (2) and mud plate (4)	Two brackets (3)	Take off.
INSTALLATION		
6.	Two brackets (3)	Put in place.
7. Two screws (2)	Two wing nuts (5)	Screw in part way.
8. Two frame members (1)	Mud plate (4)	Tip one end up, and slide in place.
9. Two frame members (1) and screws (2)	Two brackets (3)	Turn until they are in proper position to frame members (1).
10. Two brackets (3) and screws (2)	Two wing nuts (5)	Screw in, and tighten.

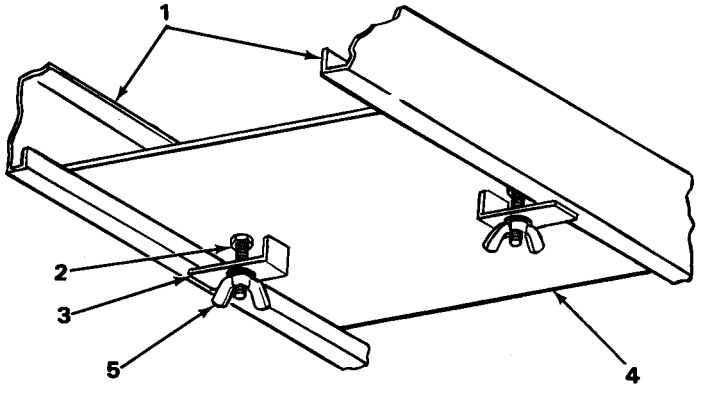

TASK ENDS HERE

TA231325

LADDERS

This task covers:

a. Removal (page 4-183)
b. Installation (page 4-184)

INITIAL SETUP

Tools	Personnel Required
Pliers, slip-joint	One
Screwdriver, cross-tip, number two	

LOCATION	ITEM	ACTION **REMARKS**

NOTE

Both ladders are removed and installed in the same way. This task is for one; repeat for the other.

REMOVAL

1.	Ladder (1) and left back door (2)	Rod (3)	Unscrew, and take off.
2.	Back door (2) and two brackets (4)	Ladder (1)	Take off.
3.	Rod (3) and chain (5)	S-link (6)	Using slip-joint pliers, bend.

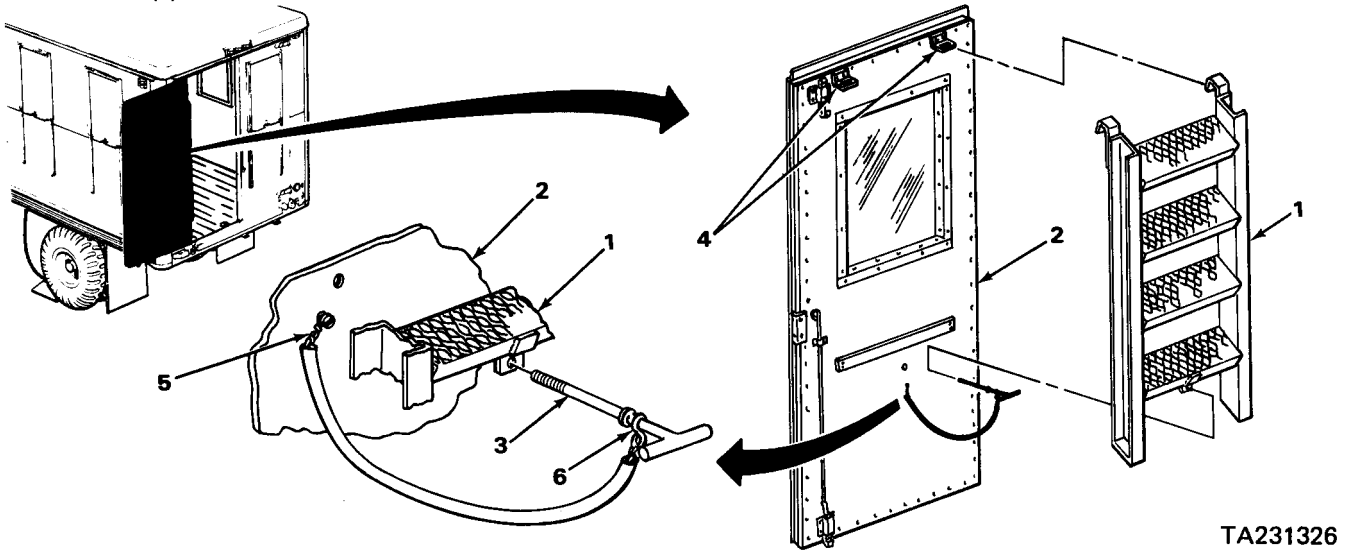

LADDERS - CONTINUED

LOCATION	ITEM	ACTION **REMARKS**
REMOVAL - CONTINUED		
4. S-link (1)	Rod (2)	Take off.
5. Chain (3) and back door (4)	Screw (5) and washer (6)	Using number two cross-tip screwdriver, unscrew and take off.
6. Backdoor (4)	Chain (3)	Take off.
7. Chain (3)	Cover (7)	Pull off.
8. Two brackets (8) and back door (4)	Four screws (9)	Using number two cross-tip screwdriver, unscrew and take off.
9. Backdoor (4)	Two brackets (8)	Take off.
10. Plate (10) and back door (4)	Four screws (11)	Using number two cross-tip screwdriver, unscrew and take off.
11. Backdoor (4)	Plate (10)	Take off.
INSTALLATION		
12.	Plate (10)	Put in place.
13. Plate (10) and backdoor (4)	Four screws (11)	Screw in, and tighten using number two cross-tip screwdriver.
14. Backdoor (4)	Two brackets (8)	Put in place.
15. Two brackets (8) and backdoor (4)	Four screws (9)	Screw in, and tighten using number two cross-tip screwdriver.
16. Chain (3)	Cover (7)	Feed chain (3) through cover (7).
17. Backdoor (4)	Chain (3)	Put in place.
18. Chain (3) and back door (4)	Washer (6) and screw (5)	Screw in, and tighten using number two cross-tip screwdriver.
19. S-link (1)	Rod (2)	Put in place.
20. Rod (2) and chain (3)	S-link (1)	Using slip-joint pliers, bend.

LADDERS - CONTINUED

LOCATION	ITEM	ACTION **REMARKS**
INSTALLATION - CONTINUED		
21. Back door (4) and two brackets (8)	Ladder (12)	Put in place.
22. Ladder (12) and back door (4)	Rod (2)	Screw in, and tighten.

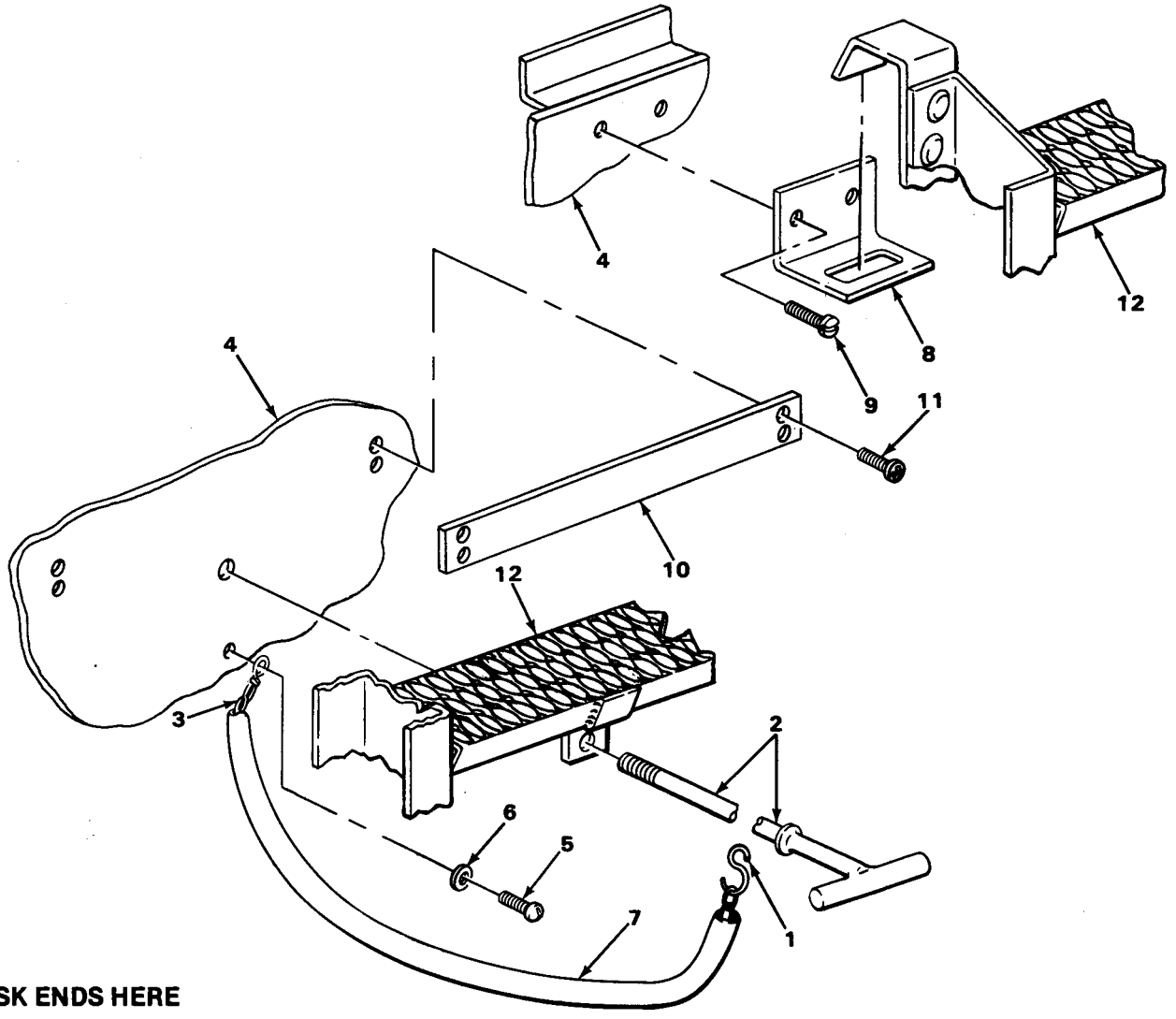

TASK ENDS HERE

TA231327

DATA PLATES

This task covers:

a. Removal (page 4-186)
b. Installation (page 4-186)

INITIAL SETUP

Tools	Personnel Required
Screwdriver, cross-tip, number two	One

LOCATION	ITEM	ACTION **REMARKS**

NOTE

All data plates are removed and installed the same way. The number of screws will vary. This task is for one; repeat for the others.

REMOVAL

1. Data plate (1) and van body (2)	Six screws (3)	Using number two cross-tip screwdriver, unscrew and take off.
2. Van body (2)	Data plate (1)	Take off.

INSTALLATION

3.	Data plate (1)	Put in place.
4. Data plate (1) and van body (2)	Six screws (3)	Screw in, and tighten using number two cross-tip screwdriver.

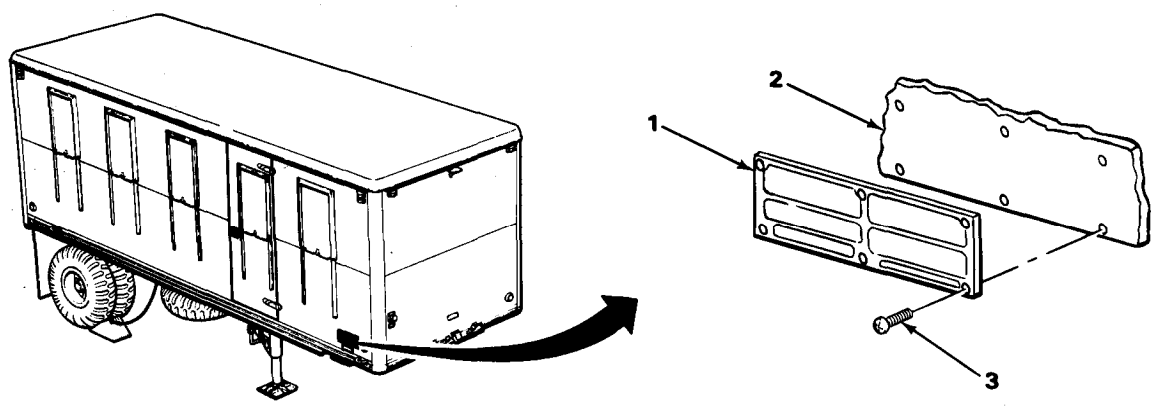

TASK ENDS HERE

TA231328

Section XV. PREPARATION FOR STORAGE OR SHIPMENT

PREPARATION FOR SHIPMENT

When shipping the 6-ton, shop van, semitrailer M146, the officer in charge of preparing the shipment will be responsible for furnishing the semitrailer, including on-vehicle materiel (ovm), to the carrier in a serviceable condition; properly cleaned, preserved, painted, and lubricated.

NOTE

The height and width of the semitrailer packaging must not exceed the limits of the loading table in TM 55-200 when preparing the semitrailer for shipment by railroad. Consult the local transportation officer, whenever possible, for limitations of the railroad lines to be used, so that delays, dangerous conditions, and damage to equipment are avoided.

Increase tire pressure to 45 psi (310 kPa) for rail shipment, unless the weather is expected to be hotter than 90°F (32°C) during shipment.

Prepare the semitrailer for shipment by processing it in accordance with TM 740-90-1.

REMOVAL OF PRESERVATIVES BEFORE SHIPMENT

The removal of preservatives is the responsibility of organizations receiving shipments. Personnel withdrawing semitrailers from storage for domestic shipment must not remove preservatives other than to ensure that materiel is complete and serviceable. If it has been determined that preservatives have been removed, they must be restored to the prescribed level prior to shipment.

RECEIVING INSPECTIONS

Report of semitrailers received in damaged condition or improperly prepared for shipment will be made on DD Form 6 (Report of Damaged or Improper Shipment), in accordance with TM 740-90-1 (Administrative Storage of Equipment). When semitrailers are inactivated, they will be processed in accordance with TM 740-90-1. Immediately upon receipt of semitrailers for storage, they must be inspected and serviced. Perform a systematic inspection and replace or repair all missing or broken parts. If repairs are beyond the scope of the unit and the semitrailers will be inactivated for an appreciable length of time, place them in limited storage and attach tags specifying the repairs needed. The reports of these conditions will be submitted by the unit commander for action by any ordnance maintenance unit.

PRESERVATION

Unit commanders are responsible for the proper care of the semitrailers.

When a semitrailer is received and has already been processed for domestic shipment, as indicated on DD Form 1397, the semitrailer does not have to be reprocessed for storage unless corrosion and deterioration are found during the inspection upon receipt. List on an SF 364 all discrepancies found due to poor preservation, packaging, packing, marking, handling, loading, storage, or excessive preservation. Repairs that cannot be handled by the receiving unit must have tags listing the needed repairs attached. A report of these conditions will be submitted by the unit commander for action by an ordnance maintenance unit.

Semitrailers to be prepared for administrative storage must be given a technical inspection and processed as described in TM 740-90-1 (Administrative Storage of Equipment). Semitrailers may be placed in administrative storage for 90 days.

The preferred type of storage for semitrailers is in a warehouse, or under cover in open sheds, whenever possible.

NOTE

Use TM 55-200, TM 55-601, and TM 743-200-1 as references for processing, storage, and shipment of material with the instructions contained in this section.

INSPECTION DURING STORAGE

Periodically perform a visual inspection on all semitrailers placed in storage. Remove any corrosion and clean, paint, and treat the area with the prescribed preservative.

NOTE

Touchup painting will be in accordance with TM 43-0139, Painting Instructions for Field Use.

Semitrailers must be reprosessed in accordance with TM 740-90-1 whenever the administrative storage period expires, if they have not been issued for service or shipped to another unit.

Semitrailers that have been removed from storage for shipment do not have to be reprocessed if they will reach their destination within the administrative storage period. Reprocess the semitrailer in accordance with TM 740-90-1 if inspection reveals any corrosion, or if anticipated in-transit weather conditions make it necessary.

Deprocess semitrailers that are to be placed in service in accordance with TM 740-90-1. Inspect and service the semitrailer in accordance with Chapter 4, Section IV., Service Upon Receipt (page 4-8).

Repair or replace all Items tagged on inspection prior to preservation.

CHAPTER 5

DIRECT SUPPORT AND GENERAL SUPPORT MAINTENANCE

OVERVIEW

This chapter contains all the maintenance authorized to be performed by Direct Support and General Support Maintenance. Included is information covering repair parts, special tools, test, measurement and diagnostic equipment (TMDE), support equipment, and direct support and general support maintenance instructions for the semitrailer.

Section I. REPAIR PARTS; SPECIAL TOOLS; TEST, MEASUREMENT AND DIAGNOSTIC EQUIPMENT (TMDE) AND SUPPORT EQUIPMENT

COMMON TOOLS AND EQUIPMENT

For authorized common tools and equipment, refer to the Modified Table of Organization and Equipment (MTOE) applicable to your unit.

SPECIAL TOOLS, TMDE, AND SUPPORT EQUIPMENT

No special tools, TMDE, or support equipment are required to maintain the semitrailer.

REPAIR PARTS

Repair parts for the semitrailer are listed in appendix F of this manual. Refer to appendix G, Illustrated List of Manufactured Items, for a description of fabricated parts.

Section II. ELECTRICAL SYSTEM MAINTENANCE

WIRE HARNESS, 110-VOLT, BRANCH CIRCUIT BREAKERS-TO-LAMPS AND SWITCHES

This task covers:

a. Removal (page 5-3)
b. Installation (page 5-4)

INITIAL SETUP

Tools

Handle, ratchet, 3/8-inch drive (two required)
Screwdriver, flat-tip, 3/16-inch
Socket, 3/8-inch drive, 7/16-inch (two required)
Wrench, open-end, 7/16-inch

Materials/Parts

Tape, electrical (item 21, appendix E)

Personnel Required

One

Equipment Condition

All 110-volt lamps removed (page 4-31).
All 110-volt switches removed (page 4-35).
Insulation removed as required to remove harness (page 4-173).

WARNING

Contact with live 110-volt electric wires could result in serious injury or death. Make sure power source is disconnected before performing maintenance on the electrical system.

WIRE HARNESS, 110-VOLT, BRANCH CIRCUIT BREAKERS-TO-LAMPS AND SWITCHES - CONTINUED

LOCATION	ITEM	ACTION **REMARKS**
REMOVAL		
1. 12 clamps (1) at roof cross-members (2)	12 screws (3) and nuts (4)	Using two 7/16-inch sockets and two ratchet handles with 3/8-inch drives, unscrew and take off.
2. Harness (5)	12 clamps (1)	Using 3/16-inch flat-tip screwdriver, spread and take off.
3. 12 clamps (6) at right side of ceiling	12 screws (7) and nuts (8)	Using 7/16-inch open-end wrench and 3/16-inch flat-tip screwdriver, unscrew and take off.
4. Harness (5)	12 clamps (6)	Using 3/16-inch flat-tip screwdriver, spread and take off.
5. Grommet (9) at side switch location (10)	Harness (5)	Pull out of grommet (9) and up toward roof.

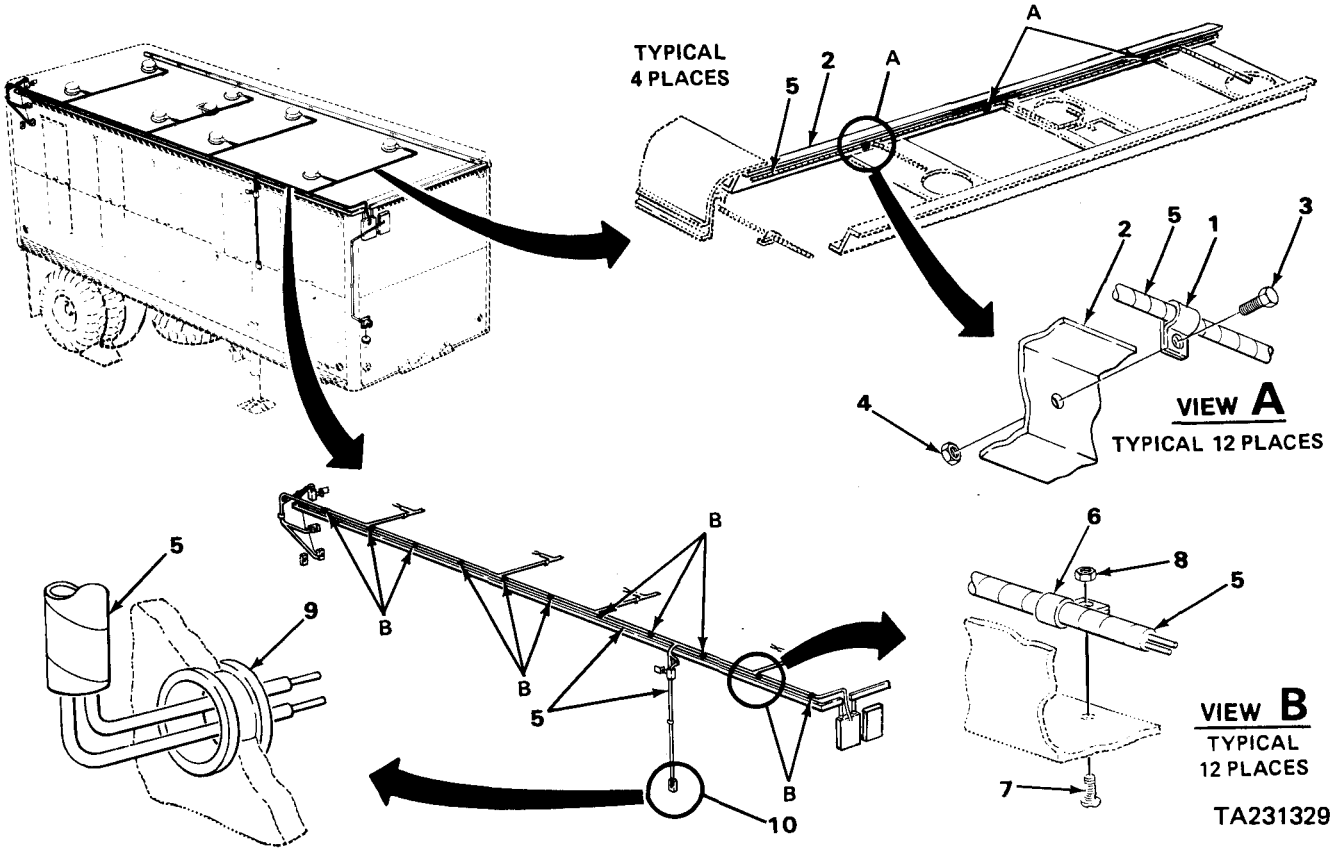

WIRE HARNESS, 110-VOLT, BRANCH CIRCUIT BREAKERS-TO-LAMPS AND SWITCHES - CONTINUED

LOCATION	ITEM	ACTION **REMARKS**
REMOVAL - CONTINUED		
6. Corner assembly (1) and ceiling member (2)	Harness (3)	Pull harness up and out from between gusset and ceiling member (2).
7. Ceiling	Harness (3)	Take off.
INSTALLATION		
8.	Harness (3)	Place in position, and hold in place with tape.

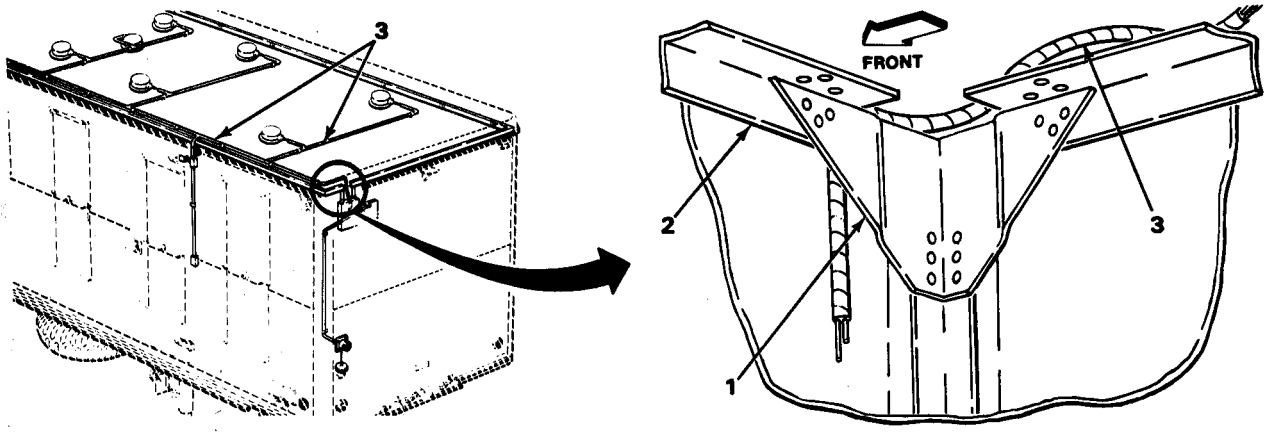

9. Harness (3) at roof cross-members (4)	12 clamps (5)	a. Put in position. b. Put on harness (3).
10. 12 clamps (5)	12 screws (6) and nuts (7)	Screw together, and tighten using two 7/16-inch sockets and two ratchet handles with 3/8-inch drives.

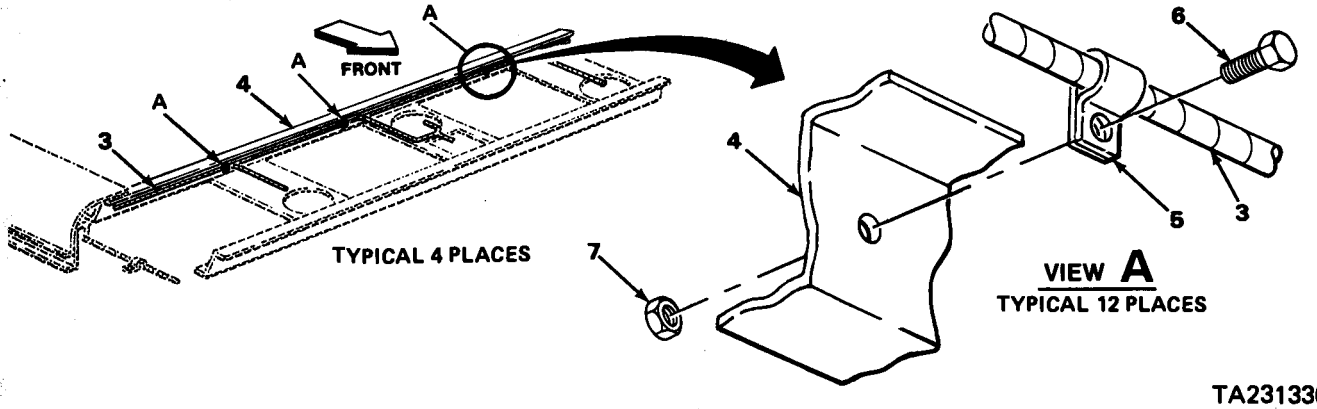

TA231330

WIRE HARNESS, 110-VOLT, BRANCH CIRCUIT BREAKERS-TO-LAMPS AND SWITCHES - CONTINUED

LOCATION	ITEM	ACTION **REMARKS**
INSTALLATION - CONTINUED		
11. Harness (3) at right side of ceiling	12 clamps (8)	a. Put in position. b. Put on harness (3).
12. 12 clamps (8)	12 screws (9) and nuts (10)	Screw together, and tighten using 7/16-inch open-end wrench and 3/16-inch flat-tip screwdriver.
13. Grommet (11) at side switch location (12)	Harness (3) branch to switch	Push through.
14. Corner assembly (1)	Harness (3)	a. Pull loose end of harness behind and around corner assembly, taking up all slack. b. Let loose end hang toward circuit breaker box.

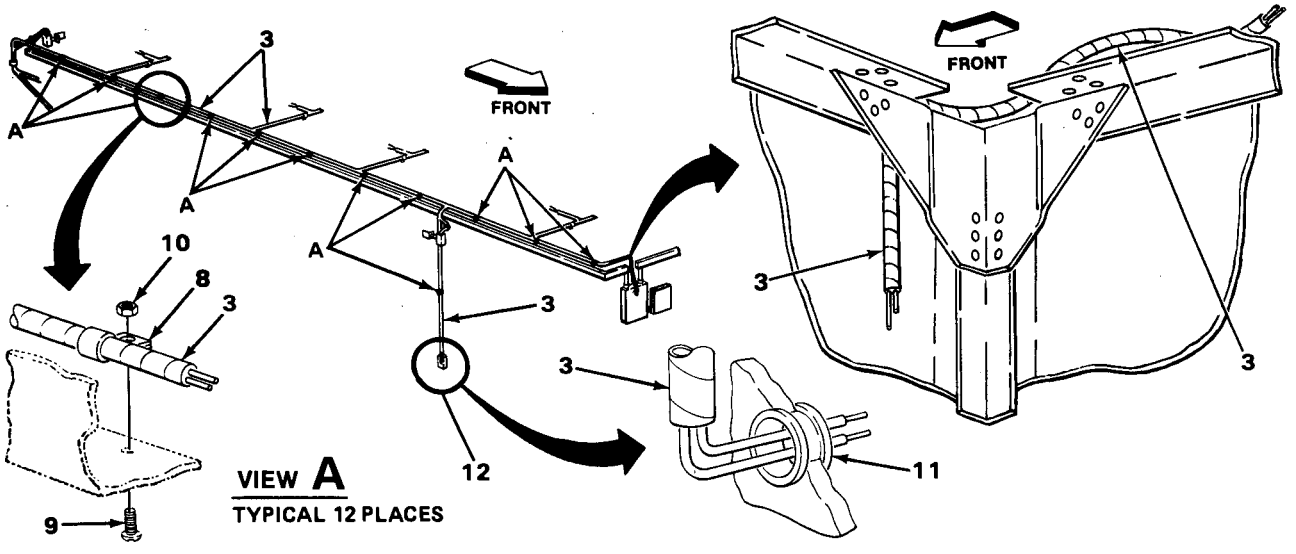

NOTE

FOLLOW-ON MAINTENANCE:

1. Install insulation (page 4-173).
2. Install 110-volt switches (page 4-35).
3. Install 110-volt lamps (page 4-31).

TASK ENDS HERE

TA231331

WIRE HARNESS, 110-VOLT, CONNECTOR RECEPTACLE-TO-MAIN CIRCUIT BREAKER

This task covers:

a. Removal (page 5-6)
b. Installation (page 5-6)

INITIAL SETUP

Tools

Handle, ratchet, 3/8-inch drive
Screwdriver, flat-tip, 3/8-inch
Socket, 3/8-inch drive, 1/2-inch
Socket, 3/8-inch drive, 7/16-inch

Personnel Required

One

Equipment Condition

Connector receptacle, 110-volt, removed (page 4-76).
Insulation removed as required to access harness (page 4-173).

LOCATION	ITEM	ACTION **REMARKS**
REMOVAL		
1. Inside front wall (1)	Harness (2)	Pull through.
2. Two clamps (3)	Two screws (4) and nuts (5)	Using 3/8-inch flat-tip screwdriver, 7/16-inch socket, and ratchet handle with 3/8-inch drive, unscrew and take off.
3. Harness (2)	Two clamps (3)	Using 3/8-inch flat-tip screwdriver, spread and take off.
4. Frame (6)	Harness (2)	Take off.
INSTALLATION		
5.	Harness (2)	Place in position.
6. Harness (2)	Two clamps (3)	a. Put in position. b. Put on harness (2).
7. Two clamps (3)	Two screws (4) and nuts (5)	Screw together, and tighten using 3/8-inch flat-tip screwdriver, 7/16-inch socket, and ratchet handle with 3/8-inch drive.

WIRE HARNESS, 110-VOLT, CONNECTOR RECEPTACLE-TO-MAIN CIRCUIT BREAKER - CONTINUED

LOCATION	ITEM	ACTION **REMARKS**
INSTALLATION - CONTINUED		
8. Inside front wall (1)	Harness (2)	Push through.

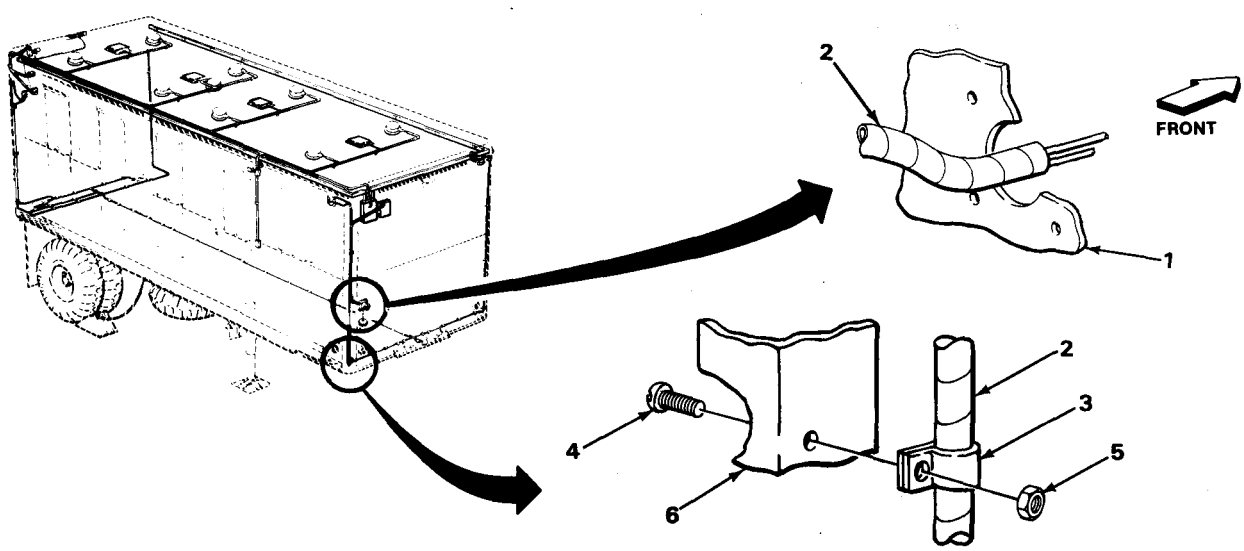

NOTE

FOLLOW-ON MAINTENANCE:

1. Install insulation as required (page 4-173).
2. Install connector receptacle, 110-volt (page 4-76).

TASK ENDS HERE

TA231332

CONNECTOR RECEPTACLE REPAIR, 110-VOLT

This task covers:

Removal (page 5-8)

INITIAL SETUP

Tools

Screwdriver, flat-tip, 3/16-inch

Personnel Required

One

Equipment Condition

Connector receptacle removed (page 4-76).

LOCATION	ITEM	ACTION **REMARKS**
REPAIR		
1. Connector receptacle (1)	Two screws (2)	Using 3/16-inch flat-tip screwdriver, unscrew and take out.
2.	Gasket (3) and insulator (4)	Take out, and separate.
3.	Gasket (3) and insulator (4)	Put in.
4.	Two screws (2)	Screw in, and tighten using 3/16-inch flat-tip screwdriver.

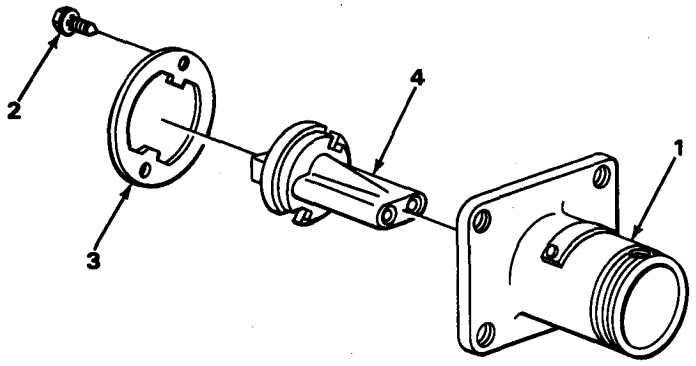

NOTE

FOLLOW-ON MAINTENANCE: Install connector receptacle (page 4-76).

TASK ENDS HERE

TA231333

CONNECTOR RECEPTACLE REPAIR, 24-VOLT

This task covers:

Repair (page 5-9)

INITIAL SETUP

Tools

Pliers, diagonal cutting
Screwdriver, flat-tip, 3/16-inch
Soldering iron, gun type
Stripper, wire, hand

Materials/Parts

Alcohol, denatured (item 2, appendix E)
Brush, acid swabbing (item 4, appendix E)

Materials/Parts - Continued

Flux, rosin (item 8, appendix E)
Solder, non-acid (item 17, appendix E)

Personnel Required

One

Equipment Condition

24-volt connector receptacle removed (page 4-74).

LOCATION	ITEM	ACTION **REMARKS**
REPAIR		
	NOTE Tag wires to aid in installation (page 4-4). If circuit marker bands are missing or not readable, replace (page 4-73).	
1. Shell (1)	Bushing retaining nut (2)	Unscrew, and pull back.
2. Bushing (3)	Shell (1)	Using 3/16-inch flat-tip screwdriver, pry off.
3.	12 inserts (4)	a. Using pliers, pull forward out of bushing (3).

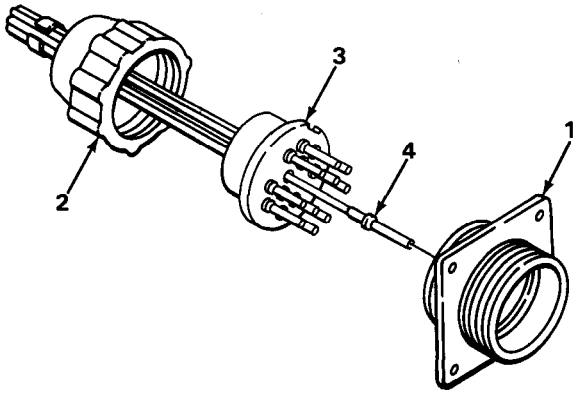

TA231334

CONNECTOR RECEPTACLE REPAIR, 24-VOLT - CONTINUED

LOCATION	ITEM	ACTION **REMARKS**
REPAIR - CONTINUED		
3. Continued		b. Using soldering iron, heat insert (1) and pull from wires (2).
4. Bushing (3) and retaining nut (4)	12 wires (2)	Pull out.
5. Bushing (3)	12 wires (2)	a. Position wires in bushing according to chart (5). b. Push all the way through. c. Using wire stripper, strip insulation back 1/4-inch.
6. 12 wires (2)	12 inserts (1)	Slip an insert over each wire, and solder using non-acid solder and soldering iron.

NOTE

Make sure wire ends are clean before soldering, If necessary, clean with cleaning solvent and stiff fiber brush. Solder must be non-acid type; use rosin flux. Wires and soldering iron must be pre-tinned for good connection and maximum transfer of heat. After soldering, clean all solder joints with an acid swabbing brush and alcohol.

7. Bushing (3)	12 wires (2) and inserts (1)	Push wire and inserts into bushing until inserts are seated.
8. Shell (6)	Bushing (3)	Put in place.
9.	Bushing retaining nut (4)	Screw on, and tighten.

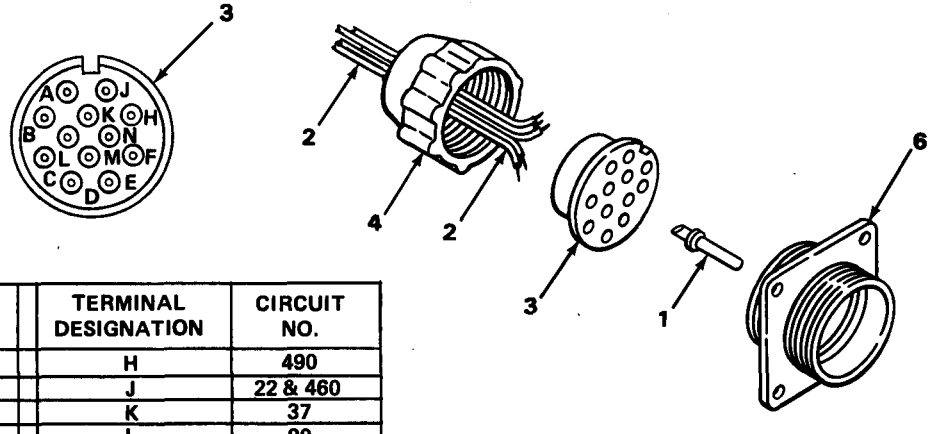

TERMINAL DESIGNATION	CIRCUIT NO.	TERMINAL DESIGNATION	CIRCUIT NO.
A	24 & 484	H	490
B	22 & 461	J	22 & 460
C	24 & 483	K	37
D	90	L	90
E	21 & 489	M	53
F	23	N	53

TA231335

CONNECTOR RECEPTACLE REPAIR, 24-VOLT - CONTINUED

REPAIR - CONTINUED

NOTE

FOLLOW-ON MAINTENANCE: Install 24-volt connector receptacle (page 4-74).

TASK ENDS HERE

WIRE HARNESS, 24-VOLT, DOMELIGHTS

This task covers:

a. Removal (page 5-12)
b. Installation (page 5-12)

INITIAL SETUP

Tools

Handle, ratchet, 3/8-inch drive
Screwdriver, flat-tip, 3/16-inch
Socket, 3/8-inch drive, 7/16-inch
Wrench, open-end, 7/16-inch

Materials/Parts

Tape, electrical (item 21, appendix E)

Personnel Required

One

Equipment Condition

Insulation removed as required to access harness (page 4-173).

LOCATION	ITEM	ACTION	**REMARKS**

NOTE

This harness is used only if the semitrailer is fitted with 24-volt domelights.

WIRE HARNESS, 24-VOLT, DOMELIGHTS - CONTINUED

LOCATION	ITEM	ACTION **REMARKS**
REMOVAL		
1. 20 clamps (1)	20 screws (2) and nuts (3)	Using 7/16-inch socket, ratchet handle with 3/8-inch drive, and 7/16-inch open-end wrench or 3/16-inch flat-tip screwdriver, unscrew and take off. **Screws may be slotted or hex head.**
2. Harness (4)	20 clamps (1)	Using 3/16-inch flat-tip screwdriver, pry apart and take off.
3. Ceiling	Harness (4)	Take off,
INSTALLATION		
4 .	Harness (4)	Place in position, and hold in place with tape.
5. Harness (4) at frame (5)	20 clamps (1)	a. Position at screw holes. b. Put on.
6. 20 clamps (1) and frame (5)	20 screws (2) and nuts (3)	Screw together, and tighten using 7/16-inch socket, ratchet handle, and 7/16-inch open-end wrench or 3/16-inch **flat-tip screwdriver.**

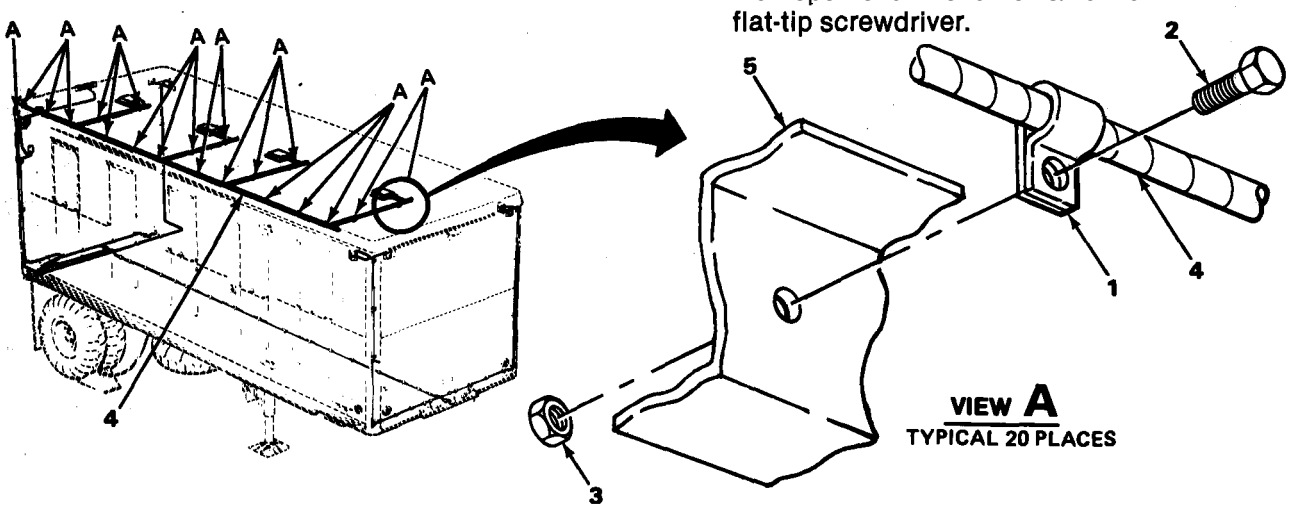

NOTE

FOLLOW-ON MAINTENANCE: Install insulation as required (page 4-173).

TASK ENDS HERE

TA231336

WIRE HARNESS, 24- VOLT, RUNNING LIGHTS

This task covers:

a. Removal (page 5-13)
b. Installation (page 5-18)

INITIAL SETUP

Tools

Pliers, diagonal cutting
Screwdriver, cross-tip, number two
Screwdriver, flat-tip, 3/16-inch
Wrench, box-end, 7/16-inch

Materials/Parts

Wire, safety (item 22, appendix E)

Personnel Required

One

Equipment Condition

Connector receptacle removed (page 4-74).
Insulation removed as required to get to harness (page 4-173).

LOCATION	ITEM	ACTION	REMARKS

REMOVAL

NOTE

The 24-volt wire harness is disconnected from all service, clearance, and identification lights the same way. Repeat this procedure for others.

Tag wires to aid in installation (page 4-4). If circuit marker bands are missing or not readable, replace (page 4-73).

1. Harness (1) to clearance lights (2)	Three connectors (3)	Pull apart.	

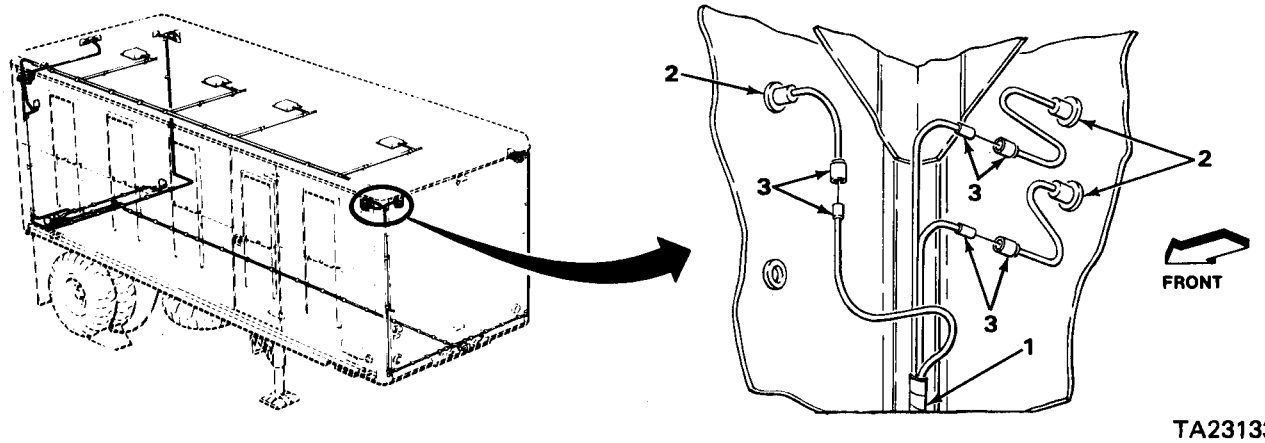

TA231337

WIRE HARNESS, 24 - VOLT, RUNNING LIGHTS - CONTINUED

LOCATION	ITEM	ACTION **REMARKS**
REMOVAL - CONTINUED		
	NOTE Some semitrailers may have side clearance lights only.	
2. Four clamps (1) at right front corner (2)	Four screws (3) and nuts (4)	Using 3/16-inch flat-tip screwdriver and 7/16-inch box-end wrench, unscrew and take out.
3. Harness branch (5)	Four clamps (1)	Using 3/16-inch flat-tip screwdriver, spread and take off.
4.	Harness branch (5)	Using diagonal cutting pliers, cut at floor level and pull out. **Repeat steps 2, 3, and 4 at left front corner.**
5. Four clamps (1) at left rear corner (2)	Four screws (3) and nuts (4)	Using 3/16-inch flat-tip screwdriver and 7/16-inch box-end wrench, unscrew and take out.
6. Harness branch (5)	Four clamps (1)	Using 3/16-inch flat-tip screwdriver, spread and take off.
7.	Harness branch (5)	Using diagonal cutting pliers, cut at floor level and pull out. **Repeat steps 5, 6, and 7 at right rear corner.**
8. Right tail-light (6)	Three connectors (7)	Pull apart.
9. Blackout stop-light (8)	Connector (9)	Pull apart.
10. Left tail-light (10)	Three connectors (7)	Pull apart.
11. 11 clamps (11) underside of floor (12)	11 screws (13)	a. Using number two cross-tip screwdriver, unscrew and take out, b. Mark location of screws.
12. Harness branch (5)	11 clamps (11)	Using 3/16-inch flat-tip screwdriver, spread and take off.

WIRE HARNESS, 24- VOLT, RUNNING LIGHTS - CONTINUED

LOCATION	ITEM	ACTION **REMARKS**
REMOVAL - CONTINUED		
13. Frame (14)	Harness branch (5)	a. Using diagonal cutting pliers, cut at point (15). b. pull out.

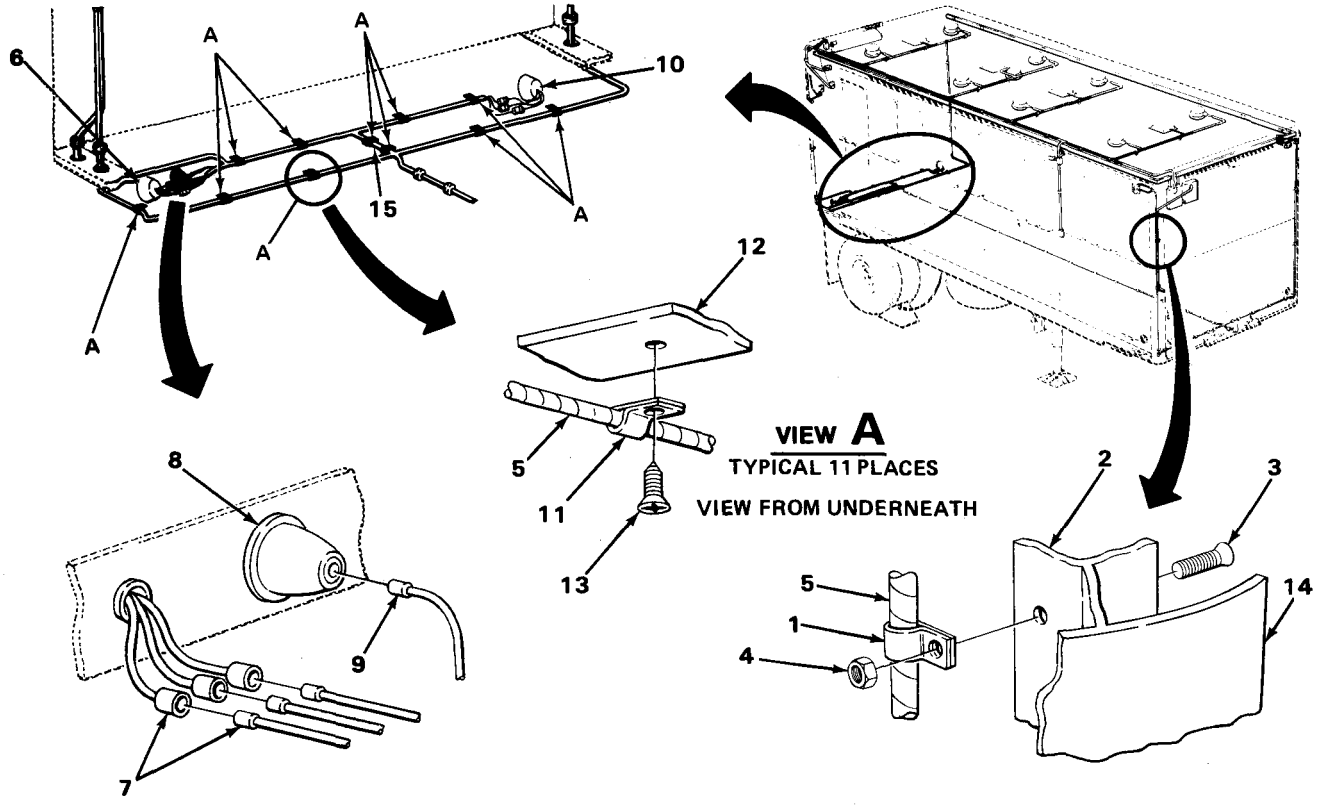

TA231338

WIRE HARNESS, 24 – VOLT, RUNNING LIGHTS – CONTINUED

	LOCATION	ITEM	ACTION REMARKS
REMOVAL – CONTINUED			

NOTE

Starting from the rear crossmember and working forward, apply the procedure described in steps 14 thru 17 in fourteen places.

14.	Crossmember (1)	Grommet (2)	Using 3/16-inch flat-tip screwdriver, pry out.
15.	Harness (3)	Grommet (2)	Pull off.
16.		Harness (3)	Using diagonal cutting pliers, cut harness at point (4).
17.	Crossmember (1)	Harness (3)	Pull through.
18.	Rear side of crossmember (5) underneath semitrailer	Grommet (6)	Using 3/16-inch flat-tip screwdriver, pry out.
19.	Harness (3)	Grommet (6)	Pull off.
20.		Front floorboards	Remove as required (page 5-91).
21.	Crossmembers (5) and (7)	Grommets (8) and (9)	From inside semitrailer, use 3/16-inch flat-tip screwdriver to pry out.
22.	Harness (3)	Grommets (8) and (9)	Pull off.
23.	Hole (10) in fifth wheel plate assembly (11)	Harness branches (12) and (13)	From underneath semitrailer, reach up through hole (10), and using diagonal cutting pliers, cut harness branches (12) and (13) off of harness (3).
24.	Crossmember (7)	Grommet (14)	Reach through hole (10), and using 3/16-inch flat-tip screwdriver, pry out.
25.	Harness (3)	Grommet (14)	Pull off.

WIRE HARNESS, 24- VOLT, RUNNING LIGHTS - CONTINUED

LOCATION	ITEM	ACTION **REMARKS**
REMOVAL - CONTINUED		
26. Crossmember (7)	Harness (3)	Pull through.
27. Frame (15)	Grommet (16)	Using 3/16-inch flat-tip screwdriver, pry out.
28. Frame members (17) and (18)	Grommets (19) and (20)	Using 3/16-inch flat-tip screwdriver, pry out.
29. Harness branch (12)	Grommets (16), (19), and (20)	Pull off.
30. Two clamps (21)	Two screws (22)	a. Using number two cross-tip screw driver, unscrew and take off. b. Mark mounting holes.
31. Harness branch (12)	Two clamps (21)	Using 3/16-inch flat-tip screwdriver, spread and take off.
32.	Harness branch (12)	Pull off.
33.	Harness branch (13)	Repeat steps 27 thru 32.

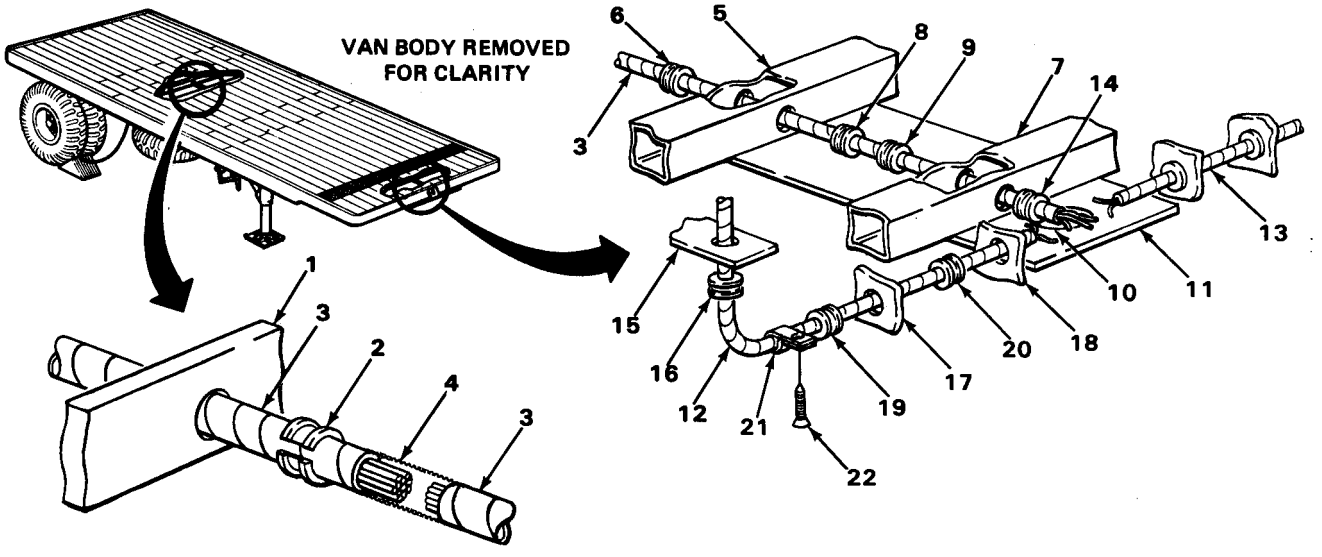

TA231339

WIRE HARNESS, 24 - VOLT, RUNNING LIGHTS - CONTINUED

LOCATION	I T E M	ACTION **REMARKS**
INSTALLATION		
34.	Main harness (1)	Lay out entire harness under semitrailer.
35. Crossmember (2) and cross-member (3)	Harness branch (4)	a. Feed piece of safety wire through both crossmembers (2) and (3), b. Connect safety wire to one of connectors (5). c. Pull connectors one by one through both crossmembers (2) and (3) until all of branch (4) has been pulled through.
36.	Harness branch (6)	Repeat step 35.
37.	Main harness (1)	a. Route piece of safety wire through both crossmembers (2) and (3). b. Connect to harness (1). c. Pull harness (1) through both cross-members (2) and (3).
38. Main harness (1)	Four grommets (7)	Put on.
39. Crossmembers (2) and (3)	Four grommets (7)	Using 3/16-inch flat-tip screwdriver, push in.

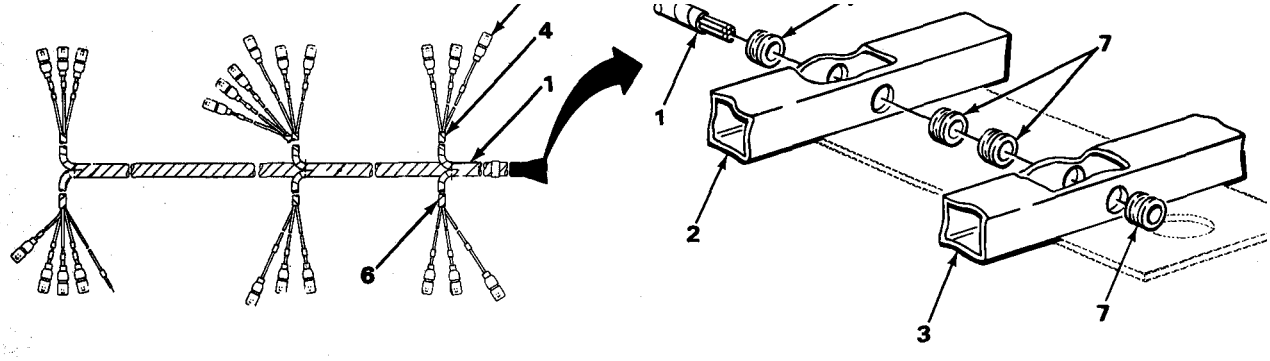

40. **Frame members (8) and (9) and frame rail (10)**	Harness branch (6)	Feed through.
41. **Harness branch (6)**	Grommets (11), (12), and (13)	Put on.
42. **Frame members (8) and (9) and frame rail (10)**	Grommets (11), (12), and (13)	Using 3/16-inch flat-tip screwdriver, push in.

WIRE HARNESS, 24- VOLT, RUNNING LIGHTS - CONTINUED

LOCATION	ITEM	ACTION **REMARKS**
INSTALLATION - CONTINUED		
43. Harness branch (6)	Two clamps (14)	a. Position at marked mounting holes. b. Put on harness.
44. Two clamps (14)	Two screws (15)	Screw in, and tighten using number two cross-tip screwdriver.
45.	Harness branch (4)	Repeat steps 40 thru 44.

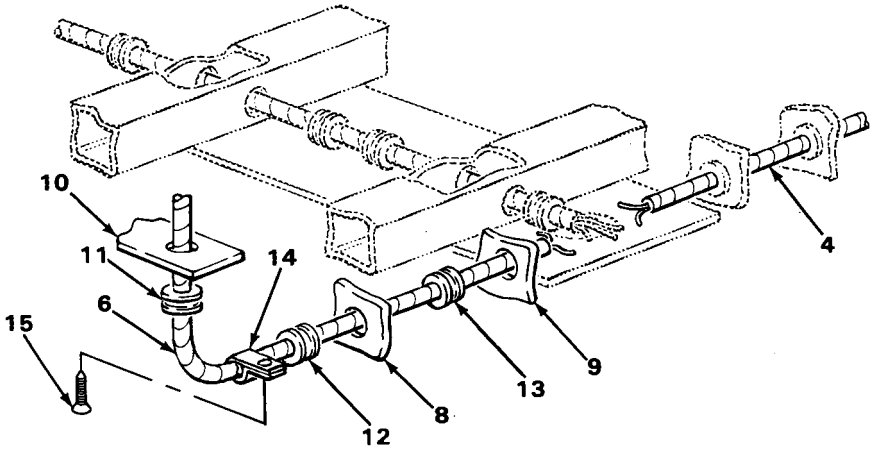

46. Right front corner (16)	Harness branch (6)	Place in position.
47. Harness branch (6)	Four clamps (17)	Put on.
48. Four clamps (17)	Four screws (18) and nuts (19)	Screw in, and tighten using 3/8-inch flat-tip screwdriver and 7/16-inch box-end wrench.
49. Left front corner (20)	Harness branch (4)	Repeat steps 46 thru 48.

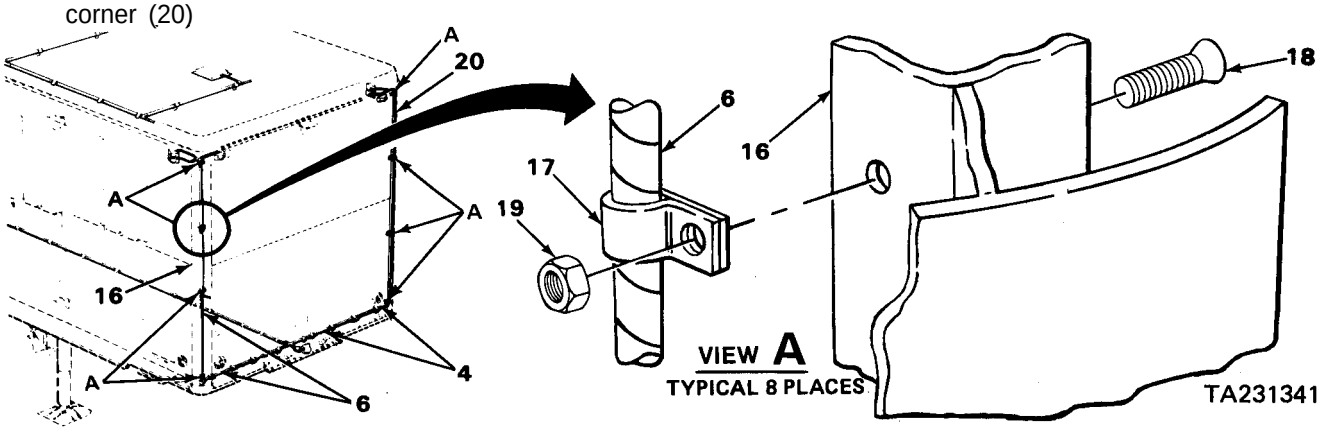

WIRE HARNESS, 24 - VOLT, RUNNING LIGHTS - CONTINUED

	LOCATION	ITEM	ACTION **REMARKS**
INSTALLATION - CONTINUED			
50.	First cross-member (1) to rear of fifth wheel assembly (2)	Harness branches (3) and (4) and main harness body (5)	Feed through. **If necessary, use safety wire to pull connectors through one at a time.**
51.		Harness branches (6) and (7) and main harness body (5)	Feed through. **Take up slack.**
52.	Main harness (5)	Grommet (8)	Put on.
53.	Crossmember (1)	Grommet (8)	Using 3/16-inch flat-tip screwdriver, push in.
54.		Harness branches (3), (4), (6), and (7) and main harness body (5)	Repeat steps 50 thru 53 through remaining crossmembers to rear of frame.
55.		Front floorboards	Put back floorboards (page 5-91).

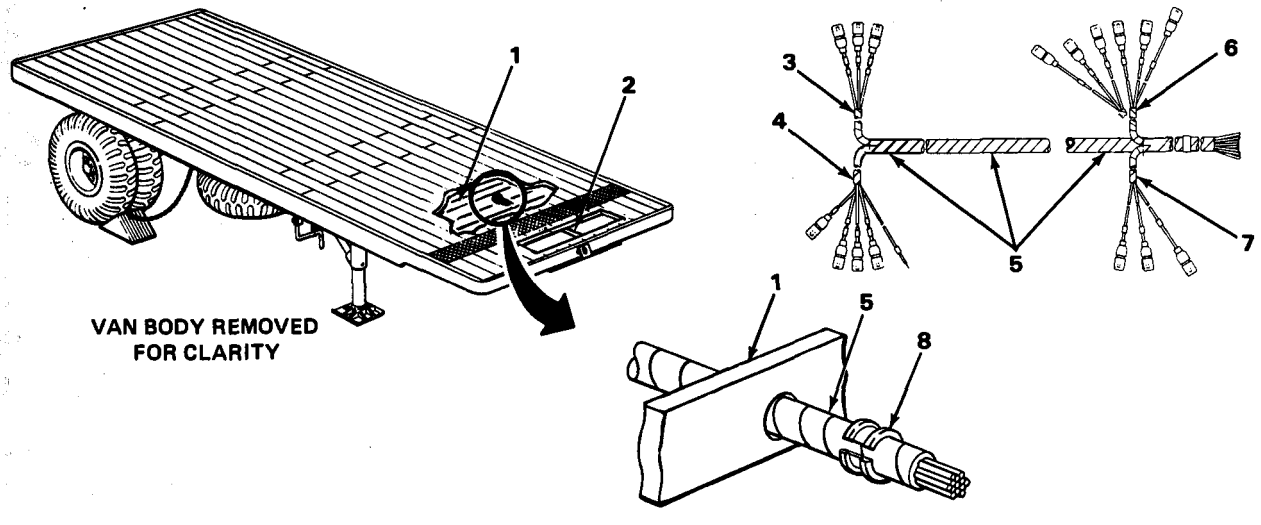

TA231342

WIRE HARNESS, 24-VOLT, RUNNING LIGHTS - CONTINUED

LOCATION	ITEM	ACTION **REMARKS**
INSTALLATION - CONTINUED		
56. Harness branches (3), (4), (6), and (7) and main harness body (5)	11 clamps (9)	a. Locate at mounting holes. b. Put on.
57. 11 clamps (9) underside of floor (10)	11 screws (11)	Screw in, and tighten using number two cross-tip screwdriver.
58. Right taillight (12)	Connectors (13)	Match wire numbers, and connect together.
59. Blackout stoplight (14)	Connector	Plug in.
60. Left taillight (16)	Connectors (17)	Match wire numbers, and connect together.
61. Left frame rail (18)	Wire (19) and harness branch (7)	Feed through.
62. Right frame rail (20)	Harness branch (6)	Feed through.

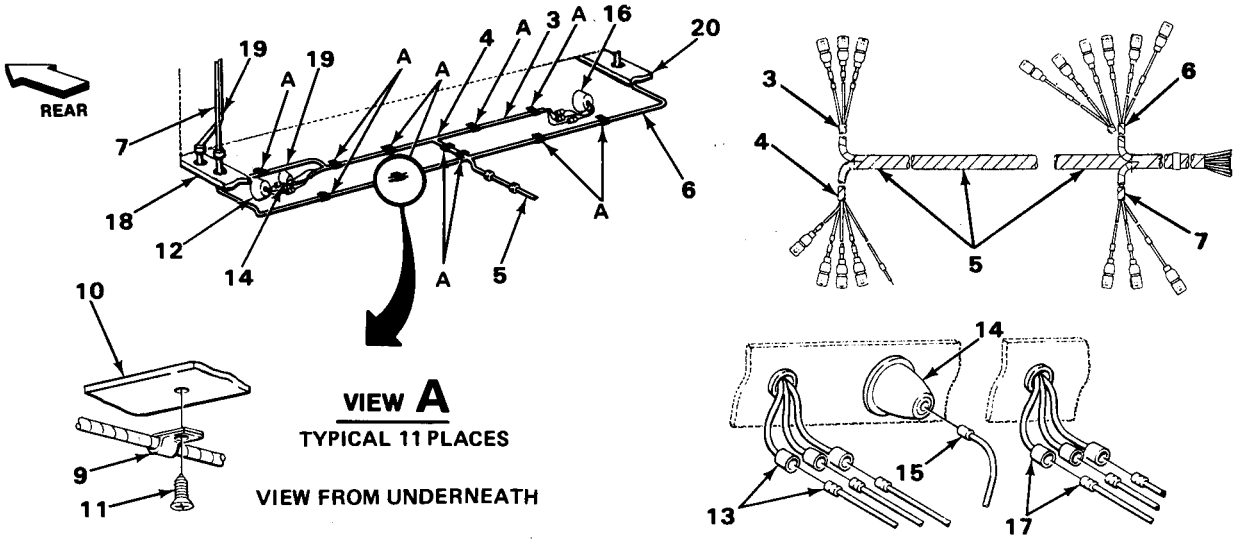

TA231343

WIRE HARNESS, 24-VOLT, RUNNING LIGHTS - CONTINUED

LOCATION	ITEM	ACTION **REMARKS**
INSTALLATION - CONTINUED		
63. Wire (1) and harness branches (2) and (3)	Two grommets (4)	Put on.
64. Frame rail (5)	Two grommets (4)	Using 3/16-inch flat-tip screwdriver, push in.
65. Right rear corner (6)	Wire (1) and harness branch (2)	Place in position.
66. Wire (1) and harness branch (2)	Four clamps (7)	Put on.
67. Left rear corner (8)	Harness branch (3)	Place in position.
66. Harness branch (3)	Four clamps (7)	Put on.
69. Eight clamps (7)	Eight screws (9) and nuts (10)	Screw in, and tighten using 3/16-inch flat-tip screwdriver and 7/16-inch box-end wrench.
70. Left front clearance lights (11)	Three connector halves (12)	Match wire numbers, and connect together. **Repeat this step on remaining clearance and identification lights.**

WIRE HARNESS, 24-VOLT, RUNNING LIGHTS - CONTINUED

INSTALLATION - CONTINUED

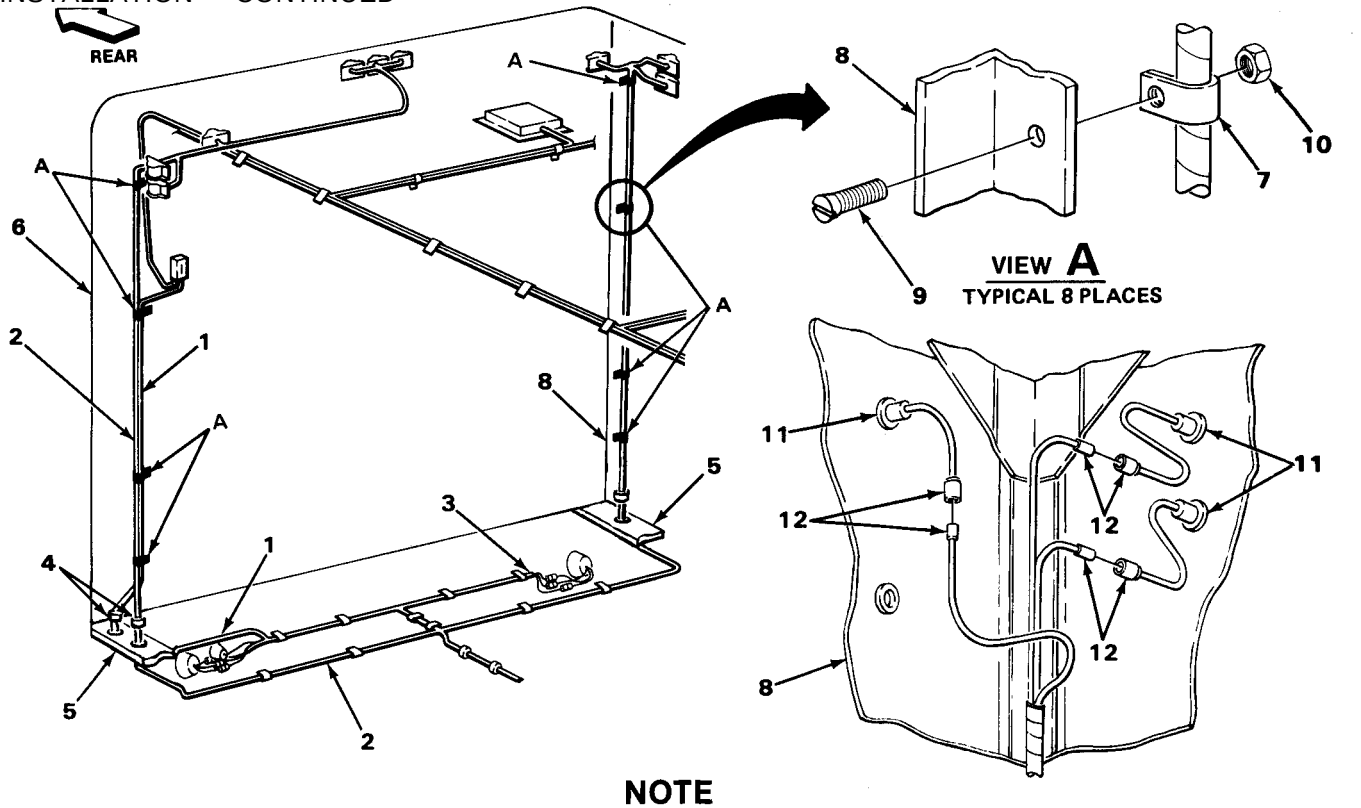

NOTE

FOLLOW-ON MAINTENANCE:

1. Install insulation as required (page 4-173).
2. Install connector receptacle (page 4-74).

TASK ENDS HERE

WALL RECEPTACLE CABLES

This task covers:

a. Removal (page 5-24)
b. Repair (page 5-26)
c. Installation (page 5-28)

INITIAL SETUP

Tools

Hammer, hand, bail-peen, 2-lb
Pliers, diagonal cutting
Screwdriver, flat-tip, 3/16-inch
Stripper, wire

Materials/Parts

Cable, special purpose (appendix G)

Personnel Required

One

TA231344

WALL RECEPTACLE CABLES - CONTINUED

LOCATION	ITEM	ACTION **REMARKS**
REMOVAL		

WARNING

Contact with live 110-volt electrical wires could result in serious injury or death. Make sure power source is disconnected before doing this task.

1.	Cover (1)	Four screws (2)	Using 3/16-inch flat-tip screwdriver, unscrew and take out.
2.	Circuit breaker box (3)	Cover (1)	Lift off.

NOTE

Tag wires to aid in installation (page 4-4). To replace wall receptacle cables you must disconnect subject cable at circuit breaker box. Steps 3 thru 6 disconnect left side cables. Steps 7 thru 10 disconnect right side cables.

3.	Cable (4), with metal band 38S	Screw (5)	Using 3/16-inch flat-tip screwdriver, unscrew part way.
4.	Terminal block (6)	Cable (4)	Pull off.
5.	Cable (7), with metal band 38D	Screw (8)	Using 3/16-inch fiat-tip screwdriver, unscrew part way.
6.	Terminal (9)	Cable (7)	Pull off.
7.	Cable (10) with metal band 38R	Screw (11)	Using 3/16-inch flat-tip screwdriver, unscrew part way.
8.	Terminal block (6)	Cable(10)	Pull off.
9.	Cable (12) with metal band 38C	Screw (13)	Using 3/16-inch fiat-tip screwdriver, unscrew part way.
10.	Terminal (14)	Cable (12)	Pull off.

WALL RECEPTACLE CABLES - CONTINUED

LOCATION	ITEM	ACTION **REMARKS**
REMOVAL - CONTINUED		
	NOTE Steps 11 thru 16 apply to right or left side wall receptacle cables.	
11. Base (15)	Cover sections (16)	Using 3/16-inch flat-tip screwdriver, pry off. Pry off all cover sections over full length of wall receptacles.
12. Conduit (17) and circuit breaker box (3)	Cables (4), (7), (10) and (12)	Pull out.
13. Connector receptacle (18)	Lock screw (19)	Turn counterclockwise as far as possible.
14. Base (15)	Connector receptacle (18)	Pull out.

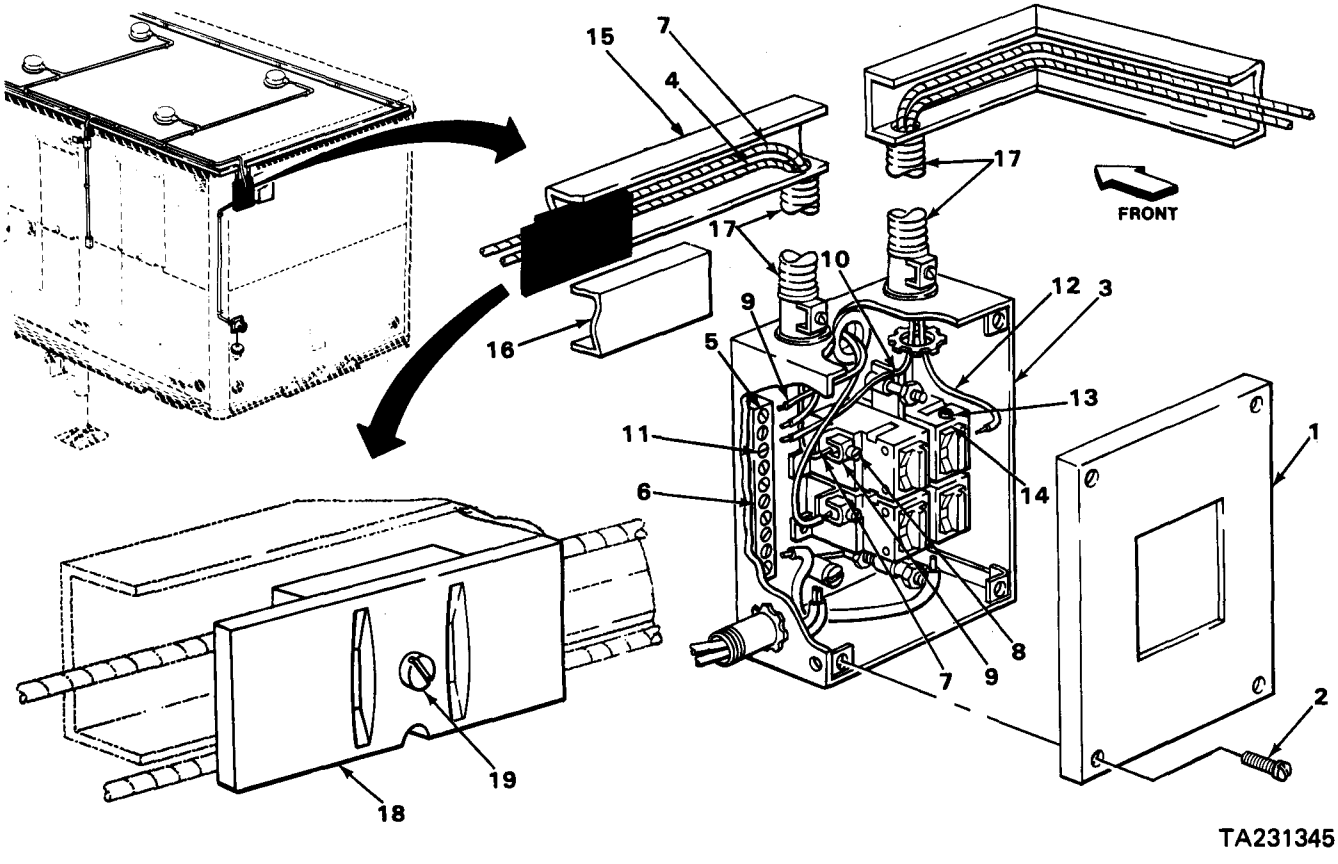

WALL RECEPTACLE CABLES - CONTINUED

LOCATION	ITEM	ACTION **REMARKS**
REMOVAL - CONTINUED		
15. Cables (1) and (2)	Screws (3) and (4)	Using 3/16-inch flat-tip screwdriver, unscrew part way.
16. Screws (3) and (4)	Cables (1) and (2)	Pull off, **Repeat steps 13 thru 16 on remaining receptacles.**

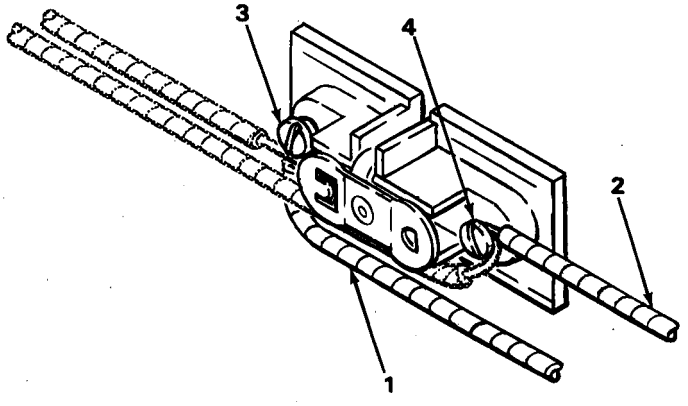

REPAIR		
17. Base (5)	Cover (6)	Using 3/16-inch flat-tip screwdriver, pry covers off as required.
18. Connector receptacles (7) and (8) connected by a damaged cable (1)	Lock screws (9)	Turn counterclockwise as far as possible.
19. Base (5)	Connector receptacles (7) and (8)	Pull out.
20. Connector receptacles (7) and (8)	Contact screws (3) and (10)	Turn connector receptacles over, and using 3/16-inch flat-tip screwdriver, unscrew part way.
21.	Cable (1)	a. Using diagonal cutting pliers, cut damaged cable at screws (3) and (10). b. Take off.

TA231346

WALL RECEPTACLE CABLES - CONTINUED

LOCATION	ITEM	ACTION **REMARKs**
REPAIR - CONTINUED		
22.	New cable (11)	a. From bulk cable, cut a 2-ft (50.8 mm) length of cable. b. Using wire stripper, strip insulation back 3/4-inch (19 mm) from each end.

NOTE

The contact screws (3) and (10) differ in color. One is a shiny silvery finish, the other a flat bronze color. When installing new cable, never connect silver to bronze. Always connect silver to silver and bronze to bronze.

23. Contact screws (3) and (10)	New cable (11)	Place in position, and wrap ends around contact screws. **The undamaged cable will remain in place. At each contact screw there will be two cables, the old cable and new cable.**
24. Cables (1) and (11)	Contact screws (3) and (10)	Tighten using 3/16-inch flat-tip screwdriver.

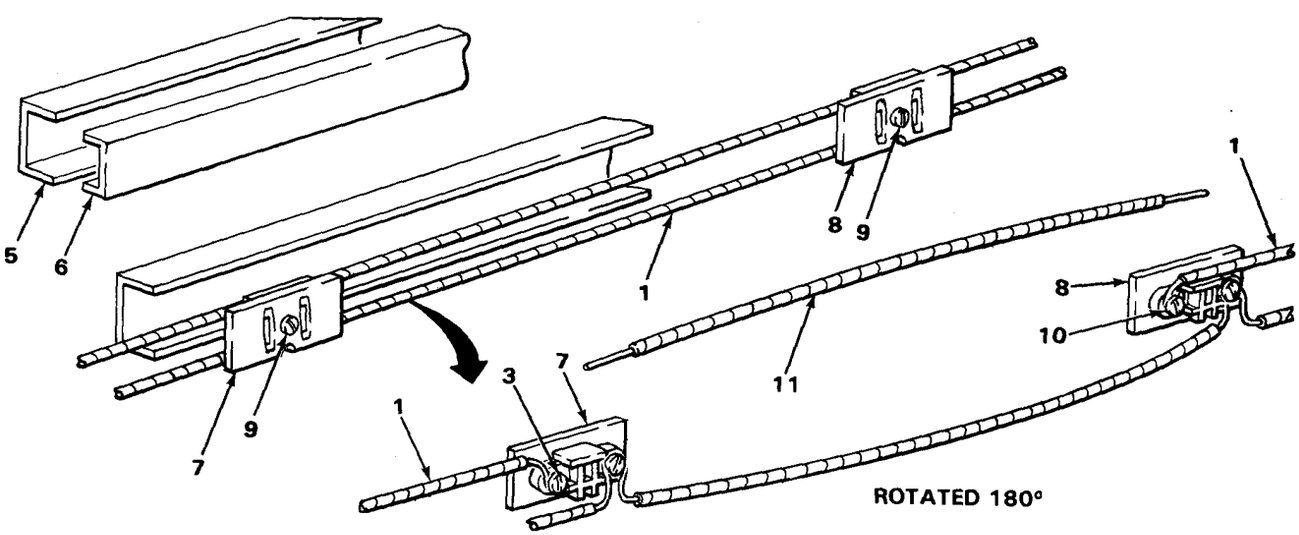

TA231347

WALL RECEPTACLE CABLES - CONTINUED

	LOCATION	ITEM	ACTION **REMARKS**
INSTALLATION			
		NOTE	
		Steps 25 thru 36 apply to right or left side wall receptacle cables.	
25.		New cables (1) and (2)	a. From bulk cable, cut new cables to same length as old cables. b. Strip insulation back 3/4-inch (19 mm) from each end using wire strippers.
		NOTE	
		If end of cable is connected to shiny silver contact screw to start with, that cable should be connected to silvery screw at each receptacle. The same applies to the cable connected to bronze finish contact screw.	
26.	Contact screw (3) at receptacle (4)	Cable (1)	Wrap bare wire around screw.
27.	Cable (1)	Screw (3)	Tighten using 3/16-inch flat-tip screwdriver.
28.	Contact screw (5) at receptacle (6)	Cable (1)	a. Strip 3/4-inch (19 mm) insulation from cable (1) at a point 2-ft (50.8 mm) from contact screw (3). b. Wrap bare wire around screw.
29.	Cable (1)	Screw (5)	Tighten using 3/16-inch flat-tip screwdriver. **Repeat steps 26 thru 29 until cable is connected to all receptacles.**
30.	Contact screw (7) at receptacle (4)	Cable (2)	Wrap bare wire around screw.
31.	Cable (2)	Screw (7)	Tighten using 3/16-inch flat-tip screwdriver.
32.	Contact screw (8) at receptacle (6)	Cable (2)	a. Strip 3/4-inch (19 mm) insulation from cable (2) at a point 2-ft (50.8 mm) from contact screw (7). b. Wrap bare wire around screw.

WALL RECEPTACLE CABLES - CONTINUED

LOCATION	ITEM	ACTION **REMARKS**
INSTALLATION - CONTINUED		
33. Cable (2)	Screw (8)	Tighten using 3/16-inch flat-tip screwdriver. **Repeat steps 30 thru 33 until cable (2) is connected to all receptacles.**
34. Base (9)	Connector receptacles (4) and (6)	Position in base.
35. Connector receptacles (4) and (6)	Lock screws (10)	Turn clockwise to lock receptacles in place using 3/16-inch flat-tip screwdriver. **Repeat steps 34 and 35 until all receptacles are positioned in base.**
36. Base (9) and conduit (11)	Cables (1) and (2)	Position in base, and push through conduit.

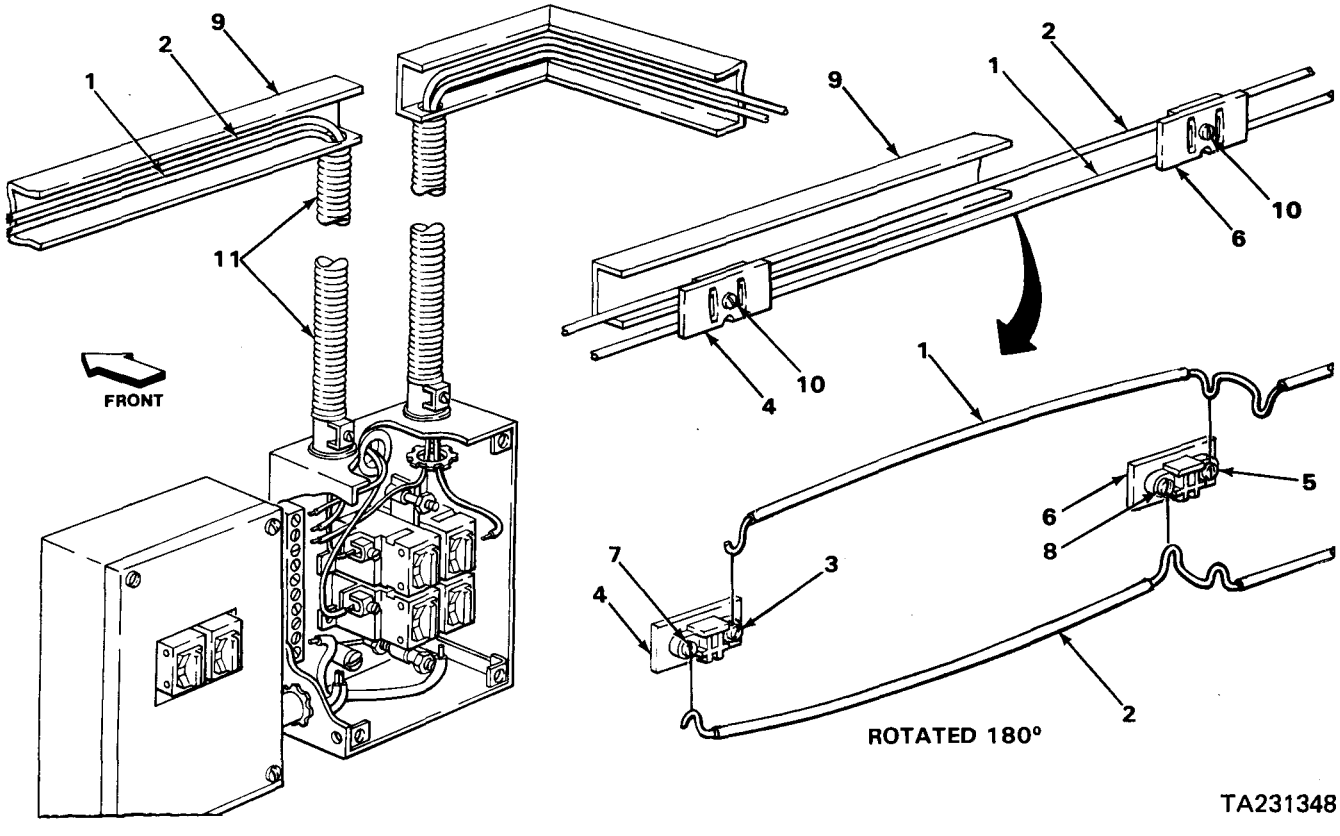

WALL RECEPTACLE CABLES - CONTINUED

LOCATION	ITEM	ACTION **REMARKS**
INSTALLATION - CONTINUED		
	NOTE	
	Steps 37 thru 40 connect left side cables to circuit breaker box, and steps 41 thru 44 connect right side cables to circuit breaker box.	
37. Terminal (1)	Cable (2) with metal band 38D	Place in position.
38. Cable (2)	Screw (3)	Tighten using 3/16-inch flat-tip screwdriver.
39. Terminal block (4)	Cable (5) with metal band 38S	Place in position.
40. Cable (5)	Screw (6)	Tighten using 3/16-inch flat-tip screwdriver.
41. Terminal (7)	Cable (8) with metal band 38C	Place in position.
42. Cable (8)	Screw (9)	Tighten using 3/16-inch flat-tip screwdriver.
43. Terminal block (4)	Cable (10) with metal band 38R	Place in position.
44. Cable (10)	Screw (11)	Tighten using 3/16-inch flat-tip screwdriver.
45. Circuit breaker box (12)	Cover (13)	Place in position.
46. Cover (13)	Four screws (14)	Screw in, and tighten using 3/16-inch flat-tip screwdriver.
47. Base (15)	Cover sections (16)	Using ball-peen hammer, tap in the full length of wall receptacle base.

WALL RECEPTACLE CABLES - CONTINUED

INSTALLATION - CONTINUED

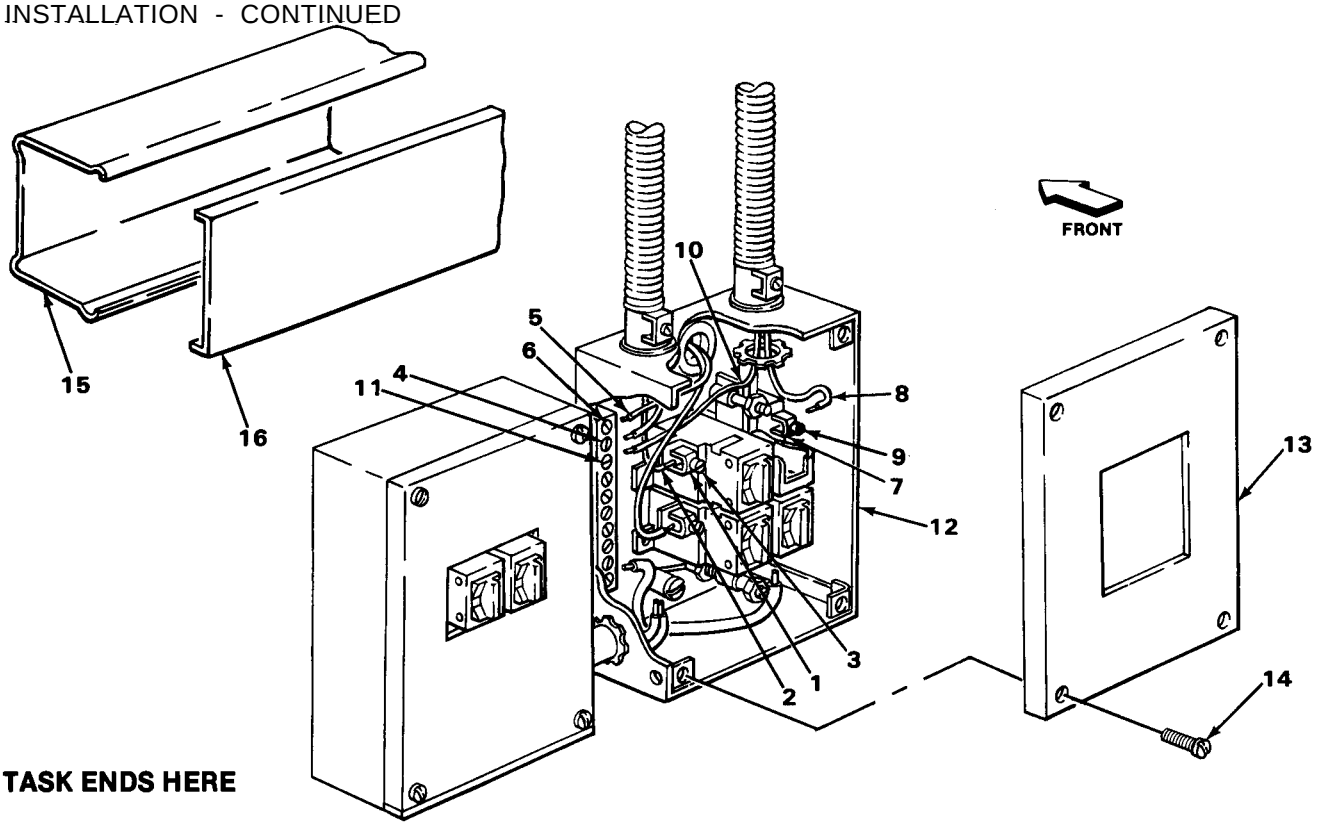

TASK ENDS HERE

WIRE HARNESS REPAIR

This task covers:

Repair by Splicing (page 5-32)

INITIAL SETUP

Tools

Brush, stiff fiber
Pliers, diagonal cutting
Pliers, long round-nose
Soldering iron, gun type
Stripper, wire, hand

Materials/Parts

Alcohol, denatured (item 2, appendix E)
Brush, acid swabbing (item 4, appendix E)
Flux, rosin (item 8, appendix E)

Materials/Parts - Continued

Solder, non-acid (item 17, appendix E)
Solvent, drycleaning, PD-680 (item 18, appendix E)
Tape, electrical (item 21, appendix E)
Wire, cable, special purpose (appendix G)

Personnel Required

One

TA231349

WIRE HARNESS REPAIR - CONTINUED

LOCATION	ITEM	ACTION **REMARKS**

WARNING

Contact with live 110-volt electric wires could result in serious injury or death. Make sure power source is disconnected before performing maintenance on the electrical system.

NOTE

For connector repair, see page 5-8.

REPAIR BY SPLICING

1.	Harness (1)	Wire (2)	Using diagonal cutting pliers, cut off damaged portion of wire (2).
2.		New wire (3)	Using diagonal cutting pliers, cut new wire of same gage and type as wire being replaced to desired length. **If necessary install connector on new wire (page 4-71).**
3.		Wires (2) and (3)	Using wire stripper, strip insulation 3/4-inch (19 mm) from the end of each wire.

WARNING

Drycleaning solvent PD-680 is both toxic and flammable. Avoid prolonged breathing of vapors, and avoid skin contact. Use only in well-ventilated area, and keep away from open flame or excessive heat. Injury to personnel could occur.

NOTE

Make sure wire ends are clean before soldering. If necessary, clean with cleaning solvent and stiff fiber brush. Solder must be non-acid type; use rosin flux. Wires and soldering iron must be pre-tinned for good connection and maximum transfer of heat. Clean all solder joints with an acid swabbing brush and alcohol after soldering to get a bright, clean surface.

4.		Wires (2) and (3)	Twist strands of each wire separately, and using soldering iron, tin strands.

WIRE HARNESS REPAIR - CONTINUED

LOCATION	ITEM	ACTION **REMARKS**
REPAIR BY SPLICING - CONTINUED		
5.	Wires (2) and (3)	a. Using long round-nose pliers, twist ends together to make a good electrical connection. b. Using soldering iron, reheat to fuse ends together.
6.	Wires (2) and (3)	Wrap with one half overlapping turns of of 3/4-inch (19 mm) electrical tape (4).

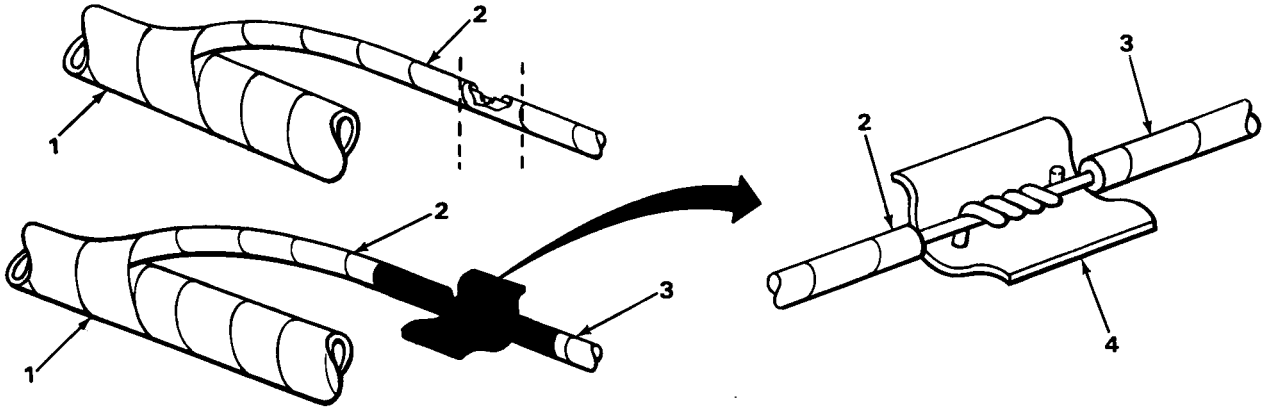

TASK ENDS HERE

Section III. AXLE MAINTENANCE

SUBFRAME AND SUSPENSION ASSEMBLY (BOGIE)

This task covers:

a. Removal (page 5-34)
b. Installation page 5-35)

TA231350

SUBFRAME AND SUSPENSION ASSEMBLY (BOGIE) - CONTINUED

INITIAL SETUP

Tools

Blocks, wood
Handle, ratchet, 3/4-inch drive
Hoist, overhead, 10-ton capacity
Jack, dolly, hydraulic, 8-ton capacity
Socket, 3/4-inch drive, 3/4-inch
Socket, 3/4-inch drive, 11/2-inch

Personnel Required

Two

Equipment Condition

Air reservoir drained (page 2-13).
Brake air iine couplings disconnected (page 2-25).
Splash guards removed (page 4-155).

LOCATION	ITEM	ACTION **REMARKS**
REMOVAL		
1. Rear of semitrailer	Two lifting eyes (1)	a. Using overhead hoist and chains, attach chains to lifting eyes. b. Take up slack.
2. Plate (2)	Nut (3), lockwasher (4), and washer (5)	Using 3/4-inch socket and ratchet handle with 3/4-inch drive, unscrew and take off.
3. Block (6)	Plate (2)	Press retaining spring (7) to release plate (2) and take off.
4. Block (6), block (8), and weld nut (9)	Four master pins (10)	a. Using 11/2-inch socket and ratchet handle with 3/4-inch drive, unscrew and take out. Leave master pin in place if it does not drop out. b. Repeat steps 2 through 4 at the other three bogie mounting points.

WARNING

As semitrailer body is lifted, the bogie assembly will tend to tip either forward or backward. Be ready with dolly jacks and blocking to prevent unwanted movement. Failure to heed this warning could result in personnel injury.

5.	Semitrailer and bogie assembly (11)	a. Using overhead hoist, lift until semi-trailer body is free of bogie. b. Roll out from under semitrailer body. c. Support semitrailer body with cribbing.

SUBFRAME AND SUSPENSION ASSEMBLY (BOGIE) - CONTINUED

LOCATION	ITEM	ACTION **REMARKS**
INSTALLATION		
6.	Semitrailer lifting eyes (1)	a. Attach chains from overhead hoist to lifting eyes. b. Lift semitrailer off cribbing. c. Remove cribbing.
7.	Bogie assembly (11)	a. Support with dolly jack, and roll under semitrailer body. b. Position under semitrailer using blocks as required.
8.	Semitrailer	Using overhead hoist, lower semitrailer, but do not allow full weight to rest on bogie assembly (11).
9. Two blocks (6), blocks (8), and weld nuts (9)	Two master pins (10)	Move bogie assembly (11) until master pins (10) can be screwed in.
10.	Semitrailer	Using overhead hoist, lower completely onto bogie assembly (11).
11. Two remaining blocks (6), blocks (8), and weld nuts (9)	Two remaining master pins (10)	Screw in, and tighten all four pins (10) using 11/2-inch socket and ratchet handle with 3/4-inch drive.
12. Four blocks (6)	Four plates (2)	Place in position.
13. Four plates (2)	Four nuts (3), lockwashers (4), and washers (5)	Screw on, and tighten using 3/4-inch socket and ratchet handle with 3/4-inch drive.

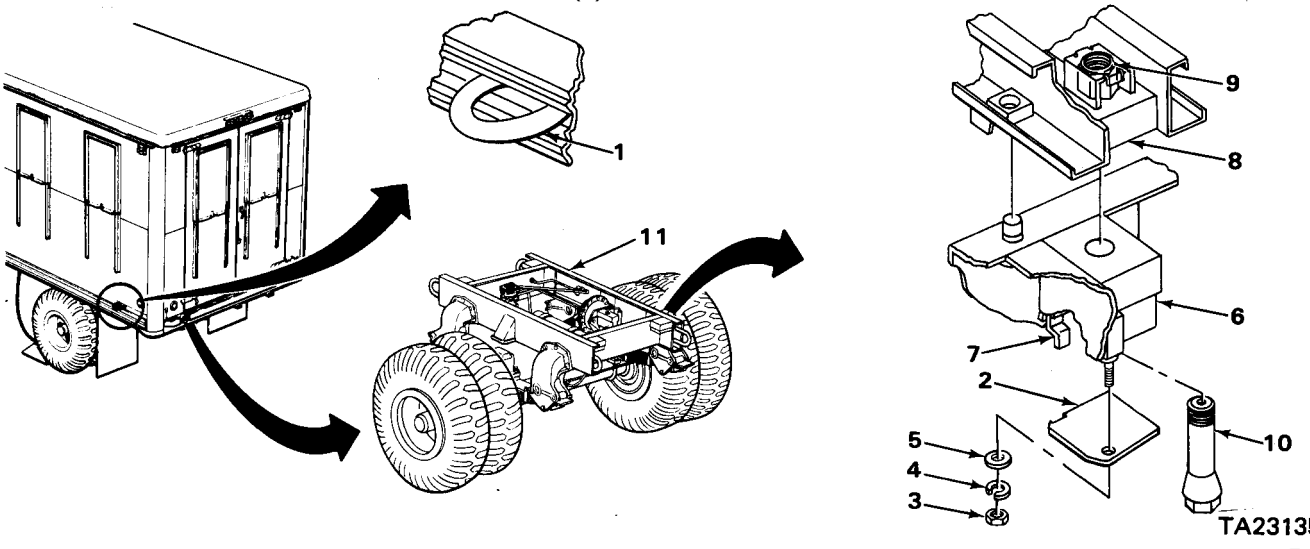

SUBFRAME AND SUSPENSION ASSEMBLY (BOGIE) - CONTINUED

LOCATION	ITEM	ACTION **REMARKS**
INSTALLATION - CONTINUED		
14.	Semitrailer	Remove dolly jacks, blocks, and overhead hoist.

NOTE

FOLLOW-ON MAINTENANCE:

1. Connect brake air line couplings (page 2-18).
2. Buildup pressure in air system (page 2-18).

TASK ENDS HERE

AXLE MAINTENANCE

This task covers:

a. Removal (page 5-37)
b. Repair (page 5-38)
c. Installation (page 5-38)

Tools

Brush, wire
Hammer, hand, ball-peen, 2-lb
Handle, ratchet, 3/4-inch drive
Jack, dolly, hydraulic, 8-ton capacity, (two required)
Socket, 3/4-inch drive, 17/16-inch
Trestle, motor vehicle, 8-ton capacity (two required)

Materials/Parts

Solvent, drycleaning (item 18, appendix E)

Personnel Required

Two

Equipment Condition

Backing plates removed from both wheels (page 4-92 and 4-95).
Hydraulic tubes and fittings removed (page 4-108).

AXLE MAINTENANCE - CONTINUED

LOCATION	ITEM	ACTION **REMARKS**
REMOVAL		
1.	Axle (1)	a. Place two trestles under semitrailer. b. If necessary, remove jacks from under axle, c. Place dolly jacks under axle (1), and raise until supported.
2. Two U-bolts (2)	Four nuts (3) and washers (4)	a. Using 17/16-inch socket and ratchet handle with 3/4-inch drive, unscrew and take off. b. Repeat on other end of axle.
3. Axle (1) and radius rod bracket (5)	Two U-bolts (2)	Using ball-peen hammer, tap out.
4.	Axle (1)	Using dolly jacks, lower enough to clear assembly (6).
5. Bogie assembly (6)	Axle (1)	Using dolly jacks, roll out.

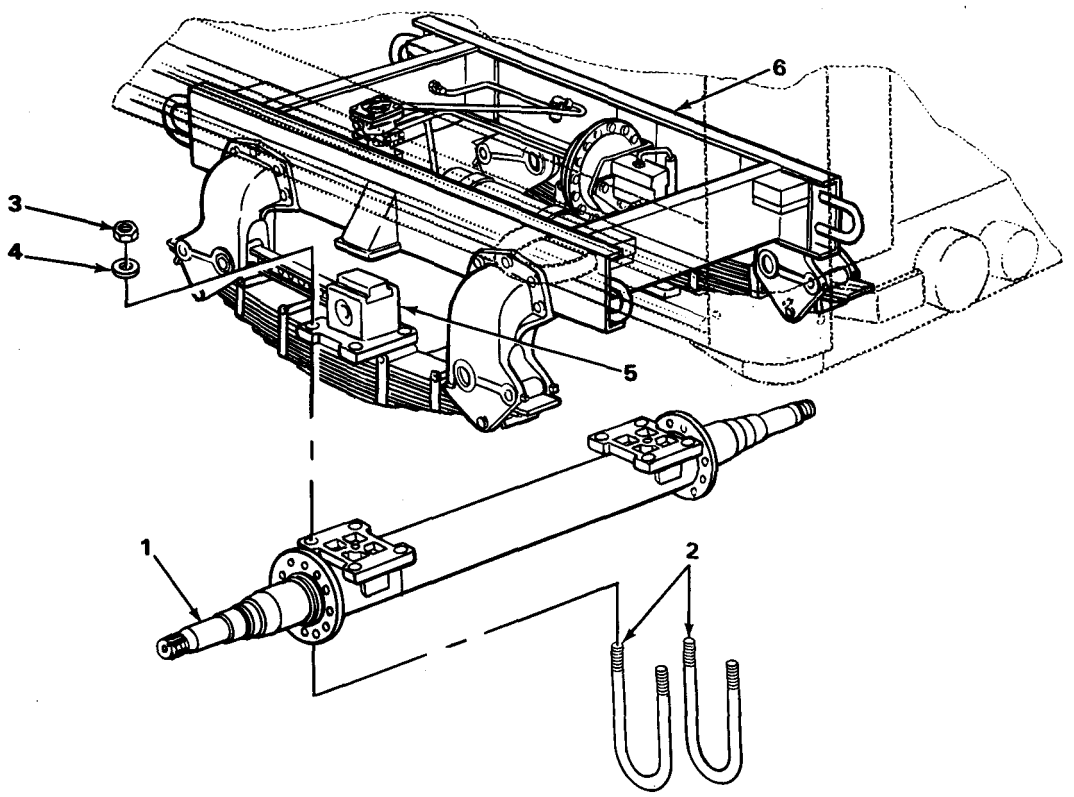

TA231352

AXLE MAINTENANCE – CONTINUED

LOCATION	ITEM	ACTION **REMARKS**
REPAIR		

WARNING

Drycleaning solvent PD-680 is both toxic and flammable. Avoid prolonged breathing of vapors and avoid skin contact. Use only in well-ventilated area, and keep away from open flame. Injury to personnel could occur.

6.	Axle (1)	a. Wash with drycleaning solvent and wire brush, and allow to dry. b. Check spring seats for wear or cracks. c. Check for damaged threads. **If damaged, chase threads with a die of same size. If not repair. able, replace axle (page 5-37).** d. Check for damaged bearing surfaces. **If damaged, replace axle (page 5-37).** e. Check spindles and tube for cracks or bends. **If damaged, replace axle (page 5-37).**

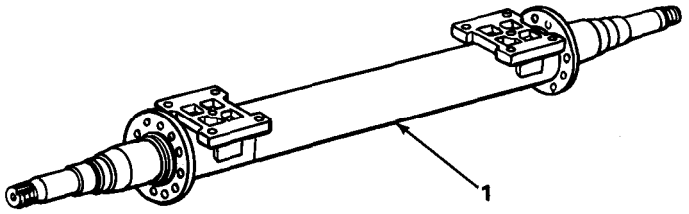

INSTALLATION

7. Bogie assembly (2)	Axle (1)	a. Roll axle under bogie using dolly jacks at each end, and place in position. b. Using dolly jacks, raise axle and aline mounting holes.

TA231353

AXLE MAINTENANCE - CONTINUED

LOCATION	ITEM	ACTION **REMARKS**
INSTALLATION - CONTINUED		
8. Axle (1) and radius rod brackets (3)	Four U-bolts (4)	a. Position on axle. b. Using ball-peen hammer, tap through spring seats (5) and radius rod brackets.
9. Four U-bolts (4)	Eight nuts (6) and washers (7)	Screw on, and tighten using 17/16-inch socket and ratchet handle with 3/4-inch drive.
10.	Axle (1)	Take away trestles and dolly jacks.

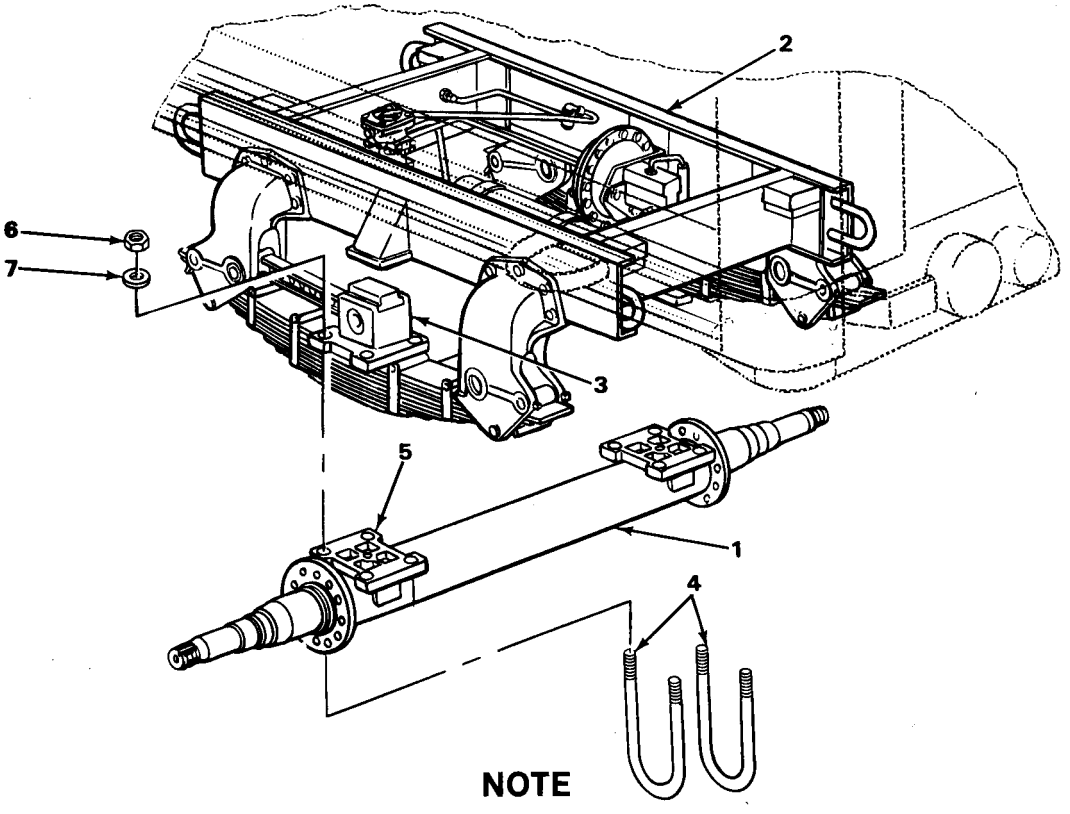

NOTE

FOLLOW-ON MAINTENANCE:

1. Install hydraulic tubes and fittings (page 4-108).
2. Install backing plates on both wheels (pages 4-92 and 4-95).

TASK ENDS HERE

TA231354

Section IV. BRAKE MAINTENANCE

BRAKESHOE ASSEMBLY REPAIR, TWO-CYLINDER BRAKE ASSEMBLY

This task covers:

Repair (page 5-40)

INITIAL SETUP

Tools

Brush, wire
Gage, depth
Gage, thickness 0.002-inch (0.051-mm)
Reliner, brake

Materials/Parts

Mask, protective
Rivets (16 required)
Shim stock, as required

Materials/Parts - Continued

Solvent, drycleaning, PD-680 (item 18, appendix E)

Personnel Required

One

Equipment Condition

Brakeshoes removed (page 4-84).

LOCATION	ITEM	ACTION	REMARKS

WARNING

Drycleaning solvent PD-680 is both toxic and flammable. Avoid prolonged breathing of vapors and avoid skin contact. Use only in well-ventilated area, and keep away from open flame. Injury to personnel could occur.

Brake linings contain asbestos fibers. Protective mask must be worn while performing maintenance on brake linings. Failure to do so could result in serious injury to personnel.

Worn brake linings could result in injury or death to personnel. When brake linings are worn to within 0.0625-inch (1.59 mm) of rivets, they must be replaced.

NOTE

There are four brakeshoes on the semitrailer. This procedure is for one. Repeat for the others.

BRAKESHOE ASSEMBLY REPAIR, TWO-CYLINDER BRAKE ASSEMBLY - CONTINUED

LOCATION	ITEM	ACTION **REMARKS**
REPAIR - CONTINUED		
1. Brake lining(1) and brakeshoe (2)	16 rivets (3)	Using brake reliner, remove.
2. Brakeshoe (2)	Brake lining (1)	a. Take off. b. Using wire brush and drycleaning solvent, clean brakeshoe (2).
3.	Brakeshoe (2)	a. Check for cracks, breaks in welds, distortion, warping, and oversize rivet holes (4). b. If defective, replace (page 4-84).

NOTE

If drums have been turned, a shim must be used between brakeshoe and lining. Shim must be the same thickness as the total depth of cut made when turning the drum.

4. Brakeshoe (2)	New brake lining (1), shim (5), and 16 rivets (3)	a. Line up holes. b. Using brake reliner, put in rivets (3), starting in center and working outward. c. Using 0.002-inch (0.051-mm) thickness gage, check fit. Gage should not penetrate past rivets.

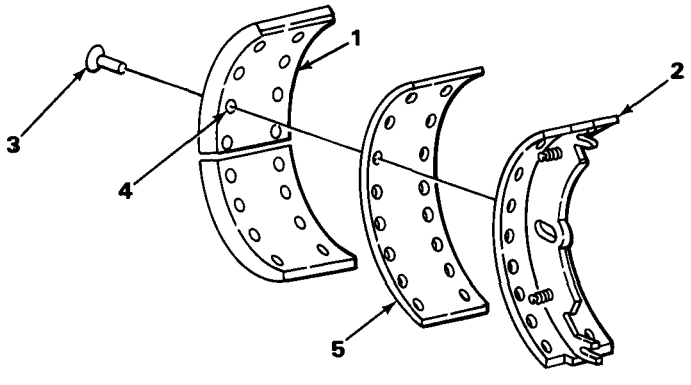

NOTE

FOLLOW-ON MAINTENANCE: Install brakeshoes (page 4-84).

TASK ENDS HERE

TA231355

BRAKESHOE ASSEMBLY REPAIR, ONE-CYLINDER BRAKE ASSEMBLY OPTION

This task covers:

Repair (page 5-42)

INITIAL SETUP

Tools

Brush, wire
Drift, brass, 3-inch
Gage, thickness, 0.002-inch (0.051-mm)
Press, arbor
Reliner, brake

Materials/Parts

Bushing, brakeshoe
Mask, protective
Rivets, (16 required)

Materials/Parts - Continued

Shim stock, as required
Solvent, drycleaning, PD-680 (item 18, appendix E)

Personnel Required

One

Equipment Condition

Brakeshoes removed (page 4-88).

LOCATION	ITEM	ACTION	REMARKS

REPAIR

WARNING

Drycleaning solvent PD-680 is both toxic and flammable. Avoid prolonged breathing of vapors and avoid skin contact. Use only in well-ventilated area, and keep away from open flame. Injury to personnel could occur.

Brake linings contain asbestos fibers. Protective mask must be worn while performing maintenance on brake linings. Failure to do so could result in serious injury to personnel.

Worn brake linings could result in injury or death to personnel. When brake linings are worn to within 0.0625-inch (1.59 mm) of rivets, they must be replaced.

NOTE

There are four brakeshoes on semitrailer. This procedure is for one. Repeat for the others.

BRAKESHOE ASSEMBLY REPAIR, ONE-CYLINDER BRAKE ASSEMBLY OPTION - CONTINUED

LOCATION	ITEM	ACTION **REMARKS**
REPAIR - CONTINUED		
1. Brake lining (1) and brakeshoe (2)	16 rivets (3)	Using brake reliner, remove.
2. Brakeshoe (2)	Brake lining (1)	Take off.
3.	Bushing (4)	a. Place brakeshoe (2) in bed of arbor press. b. Using 3-inch brass drift placed between bushing (4) and ram of press, drive out. c. Get rid of bushing (4). d. Using wire brush and drycleaning solvent, clean brakeshoe (2).
4.	Brakeshoe (2)	a. Check for cracks, breaks in welds, distortion, warping, and oversize rivet holes (5). b. If defective, replace (page 4-88).
5. Brakeshoe (2)	New bushing (4)	Using arbor press, start bushing (4) in anchor pin hole of brakeshoe (2), and drive in until flush with face of brakeshoe (2).

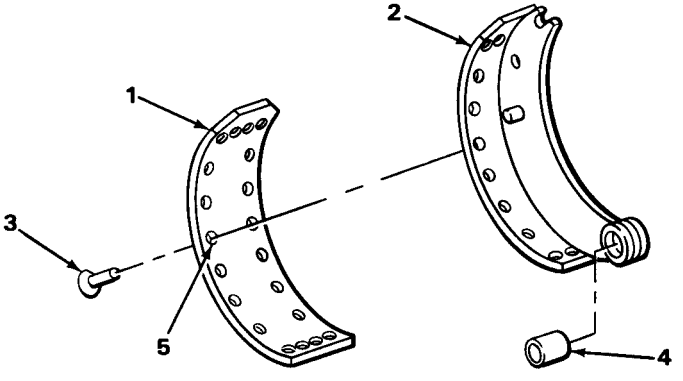

NOTE

If drums have been turned, a shim must be used between brakeshoe and lining. Shim must be the same thickness as the total depth of cut made when turning the drum.

TA231356

BRAKESHOE ASSEMBLY REPAIR, ONE-CYLINDER BRAKE ASSEMBLY OPTION - CONTINUED

LOCATION	ITEM	ACTION **REMARKS**
REPAIR – CONTINUED		
6. Brakeshoe (1)	New brake lining (2) and shim (3)	a. Line up holes, and using brake reliner, put in rivets (4) starting in center and working outward. b. Using 0.002-inch (0.051-mm) thickness gage, check fit. **Gage should not penetrate past rivets.**

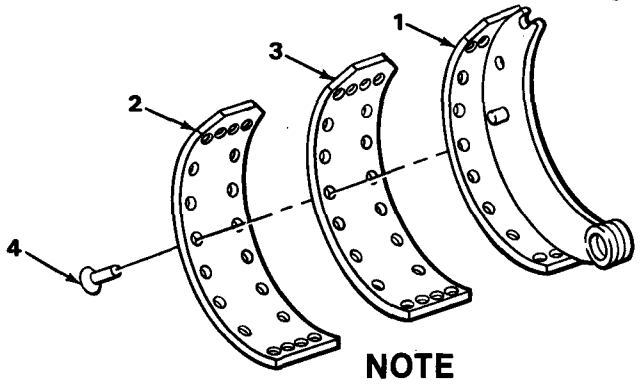

NOTE

FOLLOW-ON MAINTENANCE:

1. Install brakeshoes (page 4-88).
2. Test brakes (page 2-23).

TASK ENDS HERE

AIRBRAKE CHAMBER

This task covers:

Repair (page 5-45)

INITIAL SETUP

Tools

Handle, ratchet, 1/2-inch drive
Socket, 1/2-inch drive, 9/16-inch
Wrench, box-end, 9/16-inch

Materials/Parts

Packing, preformed

Personnel Required

Two

Equipment Condition

Airbrake chamber removed (page 4-114).

TA231357

AIRBRAKE CHAMBER - CONTINUED

LOCATION	ITEM	ACTION **REMARKS**
REPAIR		
	NOTE Collar and preformed packing may be in master cylinder. There are two types of air chambers supplied for this semitrailer. On one, two halves are held together with screws and nuts. On the other, two halves are held together by a clamp. Only the type using screws and nuts will be repaired.	
1. Air chamber (1)	18 screws (2), nuts (3), and lock-washers (4)	a. Using 9/16-inch socket, ratchet handle with 1/2-inch drive, and 9/16-inch box-end wrench, unscrew and take out. b. Separate air chamber halves.
2. Air chamber (1)	Diaphragm (5), push rod (6), push rod collar (7), pre-formed packing (8), and spring (9)	a. Take out, and replace as required. b. Put in place, and with help from assistant, push chamber halves together.
3. Air chamber (1)	18 screws (2), lockwashers (4), and nuts (3)	Screw in, and tighten using 9/16-inch socket, ratchet handle with 1/2-inch drive, and 9/16-inch box-end wrench.

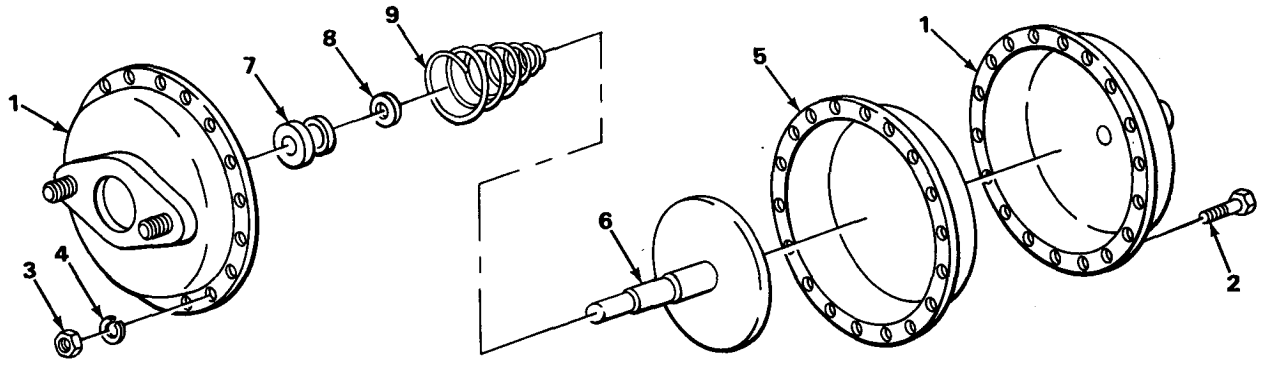

NOTE

FOLLOW-ON MAINTENANCE: Install air chamber (page 4-114).

TASK ENDS HERE

TA231358

Section V. WHEEL MAINTENANCE

BRAKEDRUM REPAIR

This task covers:

Repair (page 5-46)

INITIAL SETUP

Tools

Caliper, micrometer, ID
Handle, ratchet, 3/8-inch drive
Lathe, brakedrum
Micrometer, inside
Socket, 3/8-inch drive, 5/8-inch
Wrench, open-end, 1-inch

Materials/Parts

Cloth, crocus (item 5, appendix E)

Materials/Parts

Solvent, drycleaning, PD-680 (item 18, appendix E)

Personnel Required

One

Equipment Condition

Hub and drum removed (page 4-143).

LOCATION	ITEM	ACTION	REMARKS
REPAIR			
		WARNING	
		Drycleaning solvent PD-680 is both toxic and flammable. Avoid prolonged breathing of vapors and avoid skin contact. Use only in well-ventilated area, and keep away from open flame. Injury to personnel could occur.	
1.	Brakedrum (1)	a. Wash thoroughly with drycleaning solvent. b. Allow to air dry.	**Do not use compressed air.**
2. Brakedrum (1)	Braking surface (2)	Check for heat checking, scoring, warpage, or cracks.	**Cracked drums must be replaced. Do not weld.**

BRAKEDRUM REPAIR - CONTINUED

LOCATION	ITEM	ACTION **REMARKS**

REPAIR - CONTINUED

NOTE

Slight scoring conditions can be corrected by polishing with crocus cloth. Heavy scoring and out-of-round conditions require turning brakedrum on a refinishing lathe.

3.	Brakedrum (1)	Place brakedrum on a level surface, and check as follows: 1. Position micrometer tips at center of drum braking surfaces (2). **Move horizontally and vertically while adjusting until maximum contact is made.** 2. Turning 45° each time, repeat adjustment to obtain four readings. **Record each reading.** 3. Check readings: The maximum difference between four readings can not exceed 0.006-inch (0.015 mm). **Drums with out-of-round exceeding limits must have diameter trued on lathe.**

NOTE

Brakedrums must have hub and stud assemblies installed in order to turn brakedrums on refinishing lathe.

4.	Hub (3) and retainer assembly (4)	Position into brakedrum. **Use new wheel and stud assemblies if vehicle assemblies are not available (Appendix F).**

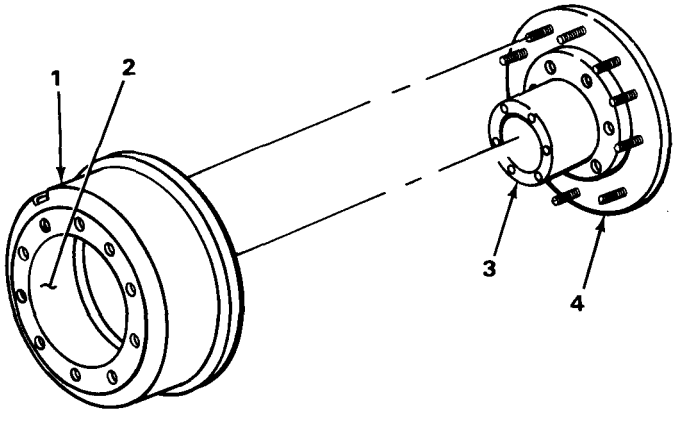

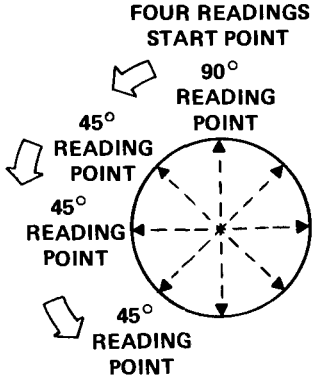

TA231359

BRAKEDRUM REPAIR - CONTINUED

LOCATION	ITEM	ACTION **REMARKS**
REPAIR - CONTINUED		
5. Ten studs (1)	Ten nuts (2)	a Screw on using 5/8-inch socket and ratchet handle with 3/8-inch drive. b. Tighten just enough to bring nuts

CAUTION

If turning causes drum to exceed original diameter stamped on inside of drum by more than 0.060-inch (230019 mm), replace drum. Whenever drum on one side of axle is refinished, the other drum on that axle should be turned to the same diameter to avoid damage to equipment.

6. Brakedrum (3)	Inner braking surface (4)	a. Refinish by turning using refinishing lathe. b. Make several thin cuts until scoring or grooving defects have been removed. **Check drum diameter after each cut to make sure you have not cut too much metal out. (See CAUTION above)** c. Refinish mating drum to same diameter as the one above.
7. Ten studs (1)	Ten nuts (2)	Using 5/8-inch socket and ratchet handle with 3/8-inch drive, unscrew and take off.
8. Retainer assembly (5)	Braked rum (3)	Lift off.

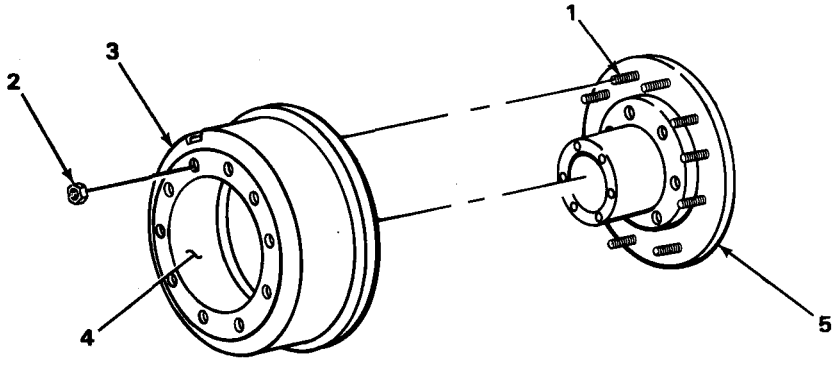

TA231360

BRAKEDRUM REPAIR - CONTINUED

REPAIR - CONTINUED

NOTE

FOLLOW-ON MAINTENANCE:

1. install hub and drum (page 4-143).
2. Test brakes (page 2-23).

TASK ENDS HERE

Section VI. TIRE MAINTENANCE

TIRE REPAIR

NOTE

For information on tire repair, refer to TM 9-2610-200-14.

TASK ENDS HERE

Section VII. FRAME AND TOWING ATTACHMENTS MAINTENANCE

FRAME

NOTE

For information on frame repair, refer to TM 9-237.

TASK ENDS HERE

This task covers:

a. Removal (page 5-50)
b. Installation (page 5-51)

INITIAL SETUP

Tools

Grinder, portable
Tape, measuring
Torch, actylene
Welder, arc

Personnel Required

Two

Equipment Condition

Semitrailer unhooked from towing vehicle (page 2-25).
24-volt connector receptacle removed (page 4-74).
Floorboards removed as necessary to access kingpin (page 5-91).

LOCATION	ITEM	ACTION	REMARKS

REMOVAL

WARNING

Heat, sparks, and flash from welding can cause serious damage to your eyes and skin. Be sure to wear proper protective clothing and protective eye gear when using acetylene torch.

CAUTION

Be careful not to damage electrical harness when using acetylene torch.

1.	Bolster plate (1)	Kingpin (2)	a. Pull harness (3) aside. b. Using acetylene torch, cut off. **Do not damage bolster plate.**

WARNING

Sparks and debris caused by grinding can cause serious damage to your eyes and skin. Be sure to wear proper protective clothing and protective face shield when using grinder.

KINGPIN - CONTINUED

LOCATION	ITEM	ACTION **REMARKS**
REMOVAL - CONTINUED		
2.	Bolster plate (1)	Using portable grinder, grind until surface is smooth.
INSTALLATION		

WARNING

Be sure assistant, that holds kingpin in place, wears insulated gloves. Transfer of heat or popping of weldment can cause serious burns.

3.	New kingpin (2)	a. Put in place, and using measuring tape, center on plate (1). b. Have assistant hold in place. c. Tack weld to bolster plate (1). d. Complete welding until secure (TM 9-237).

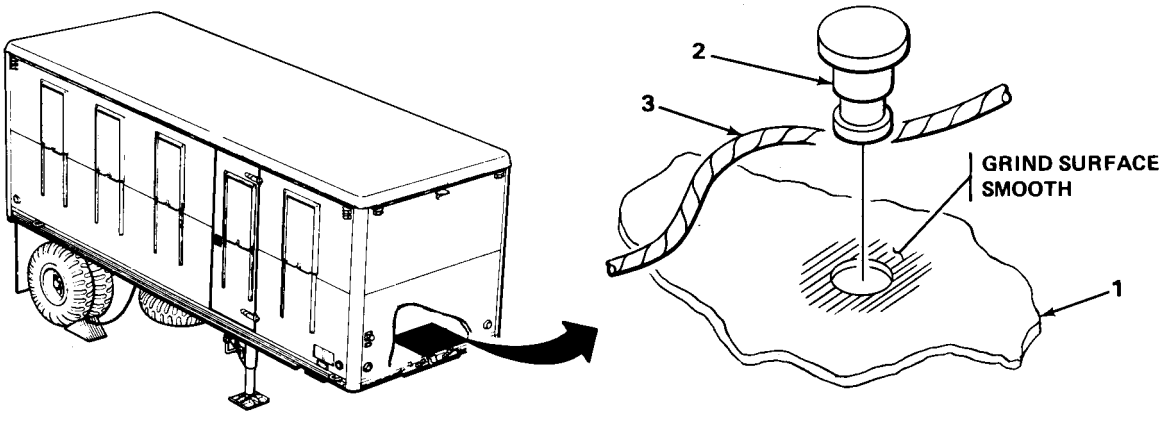

NOTE

FOLLOW-ON MAINTENANCE:

1. Put floorboards back in place (page 5-91).
2. Install 24-volt connector receptacle (page 4-74).

TASK ENDS HERE

TA231361

LANDING GEAR AND BRACKET

This task covers:

a. Removal (page 5-52)
b. Disassembly (page 5-54)
c. Cleaning (page 5-57)
d. Inspection/Repair (page 5-57)
e. Assembly (page 5-58)
f. Installation (page 5-61)

INITIAL SETUP

Tools

Blocks, wood
Brass drift, 1/2-inch
Hammer, hand, ball-peen, 2-lb
Handle, ratchet, 1/2-inch drive (two required)
Handle, ratchet, 3/4-inch drive
Jack, dolly-type, hydraulic, 10-ton
Jack, hydraulic, hand, 10-ton (two required)
Key, socket-head screw, 3/16-inch
Pan, drain
Pliers, long round-nose
Puller, bearing and gear
Punch, drive-pin, 3/16-inch
Punch, drive-pin, 5/32-inch
Screwdriver, flat-tip, 1/16-inch
Screwdriver, flat-tip, 3/8-inch
Socket, 1/2-inch drive, 3/4-inch
Socket, 1/2-inch drive, 15/16-inch
Socket, 3/4-inch drive, 1 1/8-inch
Socket, 3/4-inch drive, 1 7/16-inch
Torch, acetylene

Tools – Continued

Welder, arc
Wrench, open-end, 7/16-inch
Wrench, open-end, 9/16-inch (two required)
Wrench, open-end, 3/4-inch
Wrench, open-end, 15/16-inch

Materials/Parts

Grease, GAA (item 10, appendix E)
Rags, wiping (item 16, appendix E)
Solvent, drycleaning, Pd-680 (item 18, appendix E)

Personnel Required

Two

Equipment Condition

Landing gear shoes removed (page 4-152).
Landing gear handcrank removed (page 4-154).

LOCATION	ITEM	ACTION REMARKS
REMOVAL		
1. Right lower leg (1)	Plug (2)	a. Place drain pan to catch oil. b. Using 3/16-inch socket-head screw key, unscrew and take out. c. Allow oil to drain. d. Repeat on left leg.
2. Right brace (3)	Nut (4) and two screws (5)	a. Using 15/16-inch socket, ratchet handle with 1/2-inch drive, and 15/16-inch open-end wrench, unscrew and take out.

LANDING GEAR AND BRACKET - CONTINUED

LOCATION	ITEM	ACTION **REMARKS**
REMOVAL - CONTINUED		
2. Continued		b. Take brace (3) out. c. Repeat for left brace.
3.	Landing gear assembly (6)	Using blocks and two hand hydraulic jacks, support landing gear assembly (6).
4. Landing gear assembly (6)	18 screws (7) and nuts (8)	Using 3/4-inch socket, ratchet handle with 1/2-inch drive, and 3/4-inch wrench, unscrew and take off.
5. Frame mounting brackets (9)	Landing gear assembly (6)	a. With assistant holding landing gear steady, lower hydraulic jacks. b. Lay landing gear on dolly jack. c. Pull out from under semitrailer.
6. Two frame mounting brackets (9)	Eight screws (10)	Using 11/8-inch socket and ratchet handle with 3/4-inch drive, unscrew and take off.
7. Cross-members (11)	Frame mounting brackets (9)	Take off.
8. Landing gear assembly (6)	Brace (12)	Using acetylene torch, cut off from both landing gear assemblies (6).

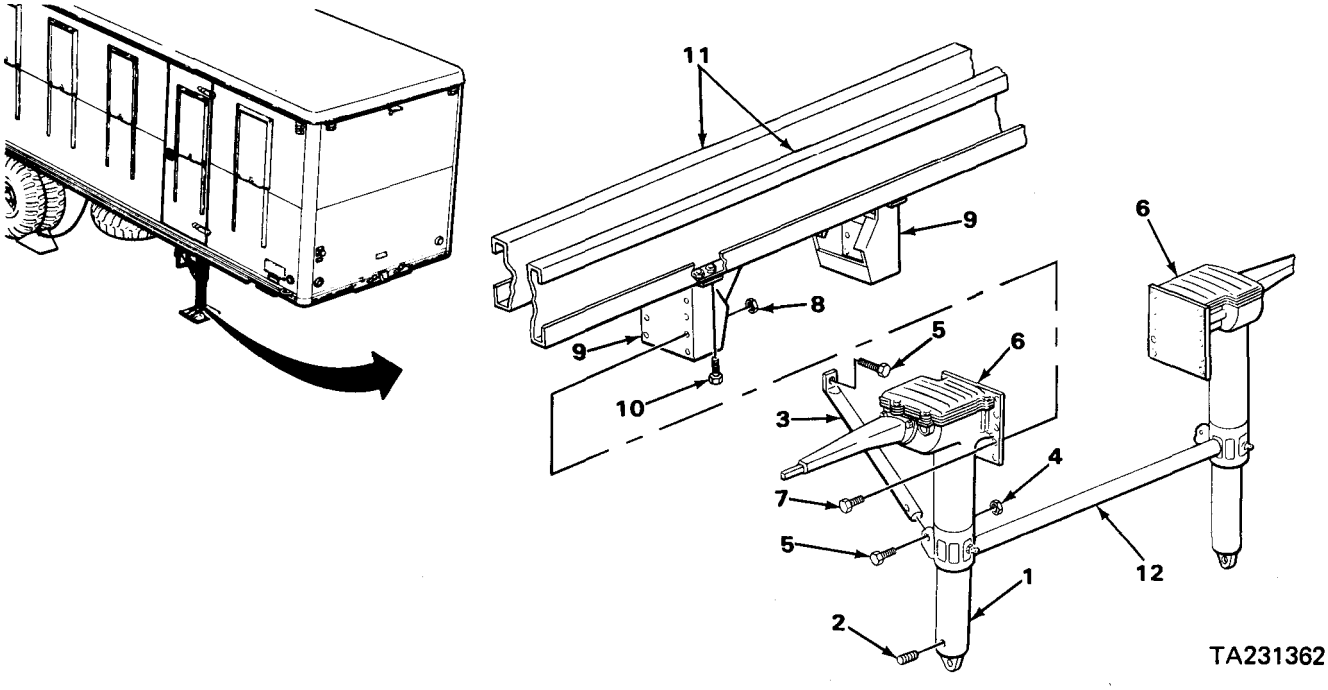

LANDING GEAR AND BRACKET - CONTINUED

LOCATION	ITEM	ACTION **REMARKS**
DISASSEMBLY		
	NOTE The following disassembly and assembly procedures apply to one leg. If necessary, repeat on other leg.	
9. Coupling (1)	Two screws (2) and nuts (3)	Using two 9/16-inch open-end wrenches, unscrew and take out.
10. Bracket (4)	Shaft (5), stowage bracket (6), and coupling (1)	Pull out. **Bracket and coupling will fall loose.**
11. Bracket (4) and gear box (7)	Three screws (8) and lockwashers (9)	Using 3/4-inch socket and ratchet handle with 1/2-inch drive, unscrew and take out.
12. Gear box (7)	Bracket (4)	Take off.
13. Cover (10)	Four screw and washer assemblies (11)	Using 3/8-inch flat-tip screwdriver, unscrew and take off.
14. Gearbox (7)	Cover (10) and gasket (12)	Lift off.
15.	Spring (13)	Using long round-nose pliers, pull spring from seat in gearbox (7).
16. Crankshaft (14) and gear (15)	Pin (16)	Using 3/16-inch drive-pin punch and ball-peen hammer, drive out.
17. Gear (15) and gearbox (7)	Crankshaft (14)	Pull out. **Ball will drop out of seat as crankshaft is removed.**
18. Gearbox (7)	Gear (15), pin (16), and ball (17)	Lift out.
19. Gear box (7) and upper leg (18)	Two lubrication fittings (19)	Using 7/16-inch open-end wrench, unscrew and take out.
20. Gear shaft (20)	Two pins (21)	Using 5/32-inch drive-pin punch and ball-peen hammer, drive out.

LANDING GEAR AND BRACKET - CONTINUED

LOCATION	ITEM	ACTION **REMARKS**
DISASSEMBLY - CONTINUED		
21. Washer (22) and bevel gear (23)	Shaft (20)	Using 1/2-inch brass drift, tap through.
22. Gear shaft (20)	Washer (22) and bevel gear (23)	Take out.
23.	Key (24)	Using 1/2-inch brass drift and ball-peen hammer, take out.
24. Gearbox (7)	Gear shaft (20)	Pull out.
25.	Rigid gearset (25)	Slide off.
26.	Two pins (21)	Lift out.
27.	Four bushings (26)	Using 1/2-inch brass drift and ball-peen hammer, drive out.

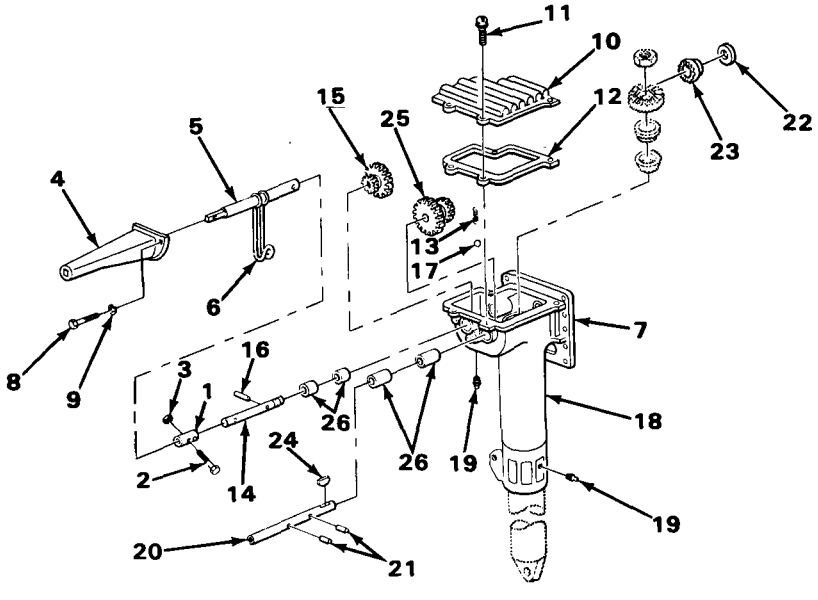

TA231363

LANDING GEAR AND BRACKET - CONTINUED

	LOCATION	ITEM	ACTION **REMARKS**
DISASSEMBLY - CONTINUED			

WARNING

Drycleaning solvent PD-680 is both toxic and flammable. Avoid prolonged breathing of vapors, and avoid skin contact. Use only in well-ventilated area, and keep away from open flame or excessive heat. Injury to personnel could occur.

28.	Gear box (1)	Bevel gear (2)	a. Using rag dampened with cleaning solvent, wipe away grease. b. Jam gear with wood block so it will not turn.
29.	Lower leg screw (3)	Locknut (4)	Using 17/16-inch socket and ratchet handle with 3/4-inch drive, unscrew and take off.
30.		Bevel gear (2) and key (5)	a. Take out wood block. b. Using bearing and gear puller, pull off.
31.	Gear box (1)	Bearing cone (6)	Using 1/16-inch flat-tip screwdriver, lift out.
32.		Bearing cup (7)	Using bearing puller, pull out. **Remove only if worn or damaged.**
33.	Gib plug (8)	Gib spring (9)	Using long round-nose pliers, pull out.
34.	Upper leg (10)	Gib plug (8)	Using 3/8-inch flat-tip screwdriver, unscrew and take out.
35.		Lower leg (11) and screw (3)	Pull out as an assembly. **As assembly is pulled out, gib (12) will be forced out of upper leg (10). Watch so that gib (12) is not lost.**
36.	Lower leg screw (3)	Bearing (13)	Pull off.
37.	Nut (14)	Lower leg screw (3)	Unscrew, and take out.
38.		Two pins (15)	Push into free nut in lower leg.
39.	Lower leg (11)	Nut (14)	a. Using puller, pull out. b. Take two pins (15) out of nut (14).

LANDING GEAR AND BRACKET - CONTINUED

LOCATION	ITEM	ACTION **REMARKS**
CLEANING		

WARNING

Drycleaning solvent PD-680 is both toxic and flammable. Avoid prolonged breathing of vapors, and avoid skin contact. Use only in well-ventilated area, and keep away from open flame or excessive heat. Injury to personnel could occur.

40.	All metal parts except bearing cone (6) and bearing (13)	a. Clean in drycleaning solvent. b. Wipe dry with clean, dry rags.
41.	Bearings (6) and (13)	Clean (TM 9-214).
INSPECTION/REPAIR		

NOTE

For more information on how to inspect parts, go to General Maintenance Instructions (page 4-1).

Repair by replacing damaged or defective parts.

42.	All gears	a. Look for cracked, chipped, or broken teeth. b. Look for excessive wear in bores.

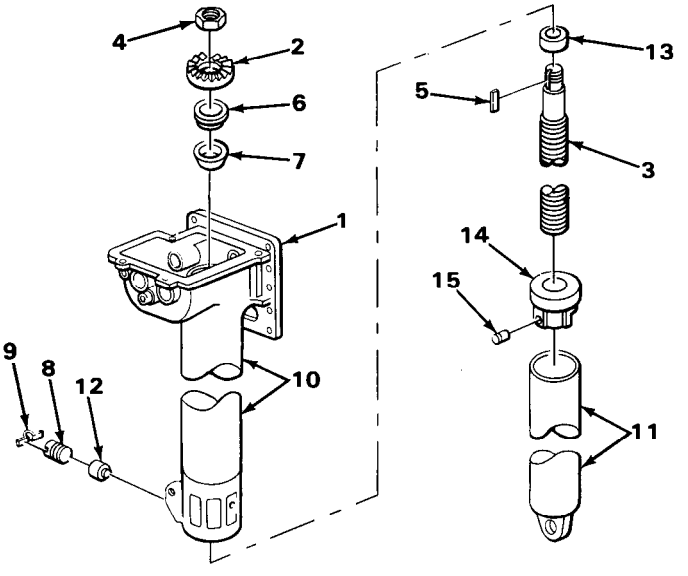

TA231364

LANDING GEAR AND BRACKET - CONTINUED

LOCATION	ITEM	ACTION REMARKS
ASSEMBLY		
43. Lower leg(1)	Nut (2)	Put in, and line up holes for pins (3).
44. Lower leg(1) and nut (2)	Two pins (3)	From inside nut, push pins through holes in nut and through wall of leg, small diameter first.
45. Nut (2)	Screw (4)	Thread lower end of screw through nut.
46. Screw (4)	Bearing (5)	Place on screw.
47. Upper leg (6)	Lower leg (1) and screw (4)	a. Slide into upper leg. b. Position so groove in leg is alined with hole for gib (7).
48.	Gib (7)	Put in.
49.	Gib plug (8)	a. Screw in, and tighten using 3/8-inch flat-tip screwdriver. b. Back off plug 1/2-turn.
50. Slot in gib plug (8)	Gib spring (9)	Press to bottom of slot.
51. Gearbox (10)	Bearing cup (11)	If removed, using 1/2-inch brass drift and ball-peen hammer, tap in.
52. Bearing cup (11) and screw (4)	Bearing cone (12)	Slip over shaft, and seat in cup.
53. Gearbox (10)	Four bushings (13)	Using 1/2-inch brass drift and ball-peen hammer, tap in.
54. Screw (4)	Key (14)	Seat in keyway using ball-peen hammer.
55.	Bevel gear (15)	a. Aline gear keyway with key (14). b. Using ball-peen hammer and 1/2-inch brass drift, tap on.
56.	Nut (16)	a. Jam gear (15) with wood block so it cannot turn. b. Screw on, and tighten using 17/16-inch socket and handle with 3/4-inch drive. c. Remove block.

LANDING GEAR AND BRACKET - CONTINUED

LOCATION	ITEM	ACTION **REMARKS**
ASSEMBLY - CONTINUED		
57. Gearbox (10)	Bevel gear (17), washer (18), and rigid gear set (19)	Put in.
58.	Gear shaft (20)	Start into bore.
59. Bevel gear (17), washer (18), and rigid gear set (19)	Gear shaft (20)	a. Aline with bores of bevel gear, washer, and rigid gear set. b. Push through rigid gear set (19).
60. Gear shaft (20)	Key (21)	a. Using 1/2-inch drift and ball-peen hammer, tap in. b. Push through bevel gear (17) and washer (18).
61.	Pins (22)	Using 1/2-inch drift and ball-peen hammer, tap in.
62. Gearbox (10)	Gear (23)	Place in position.
63. Gearbox (10) and gear (23)	Crankshaft (24)	Push through.
64. Crankshaft (24) and gear (23)	Pin (25)	Using 3/16-inch drive-pin punch and bail-peen hammer, drive in.

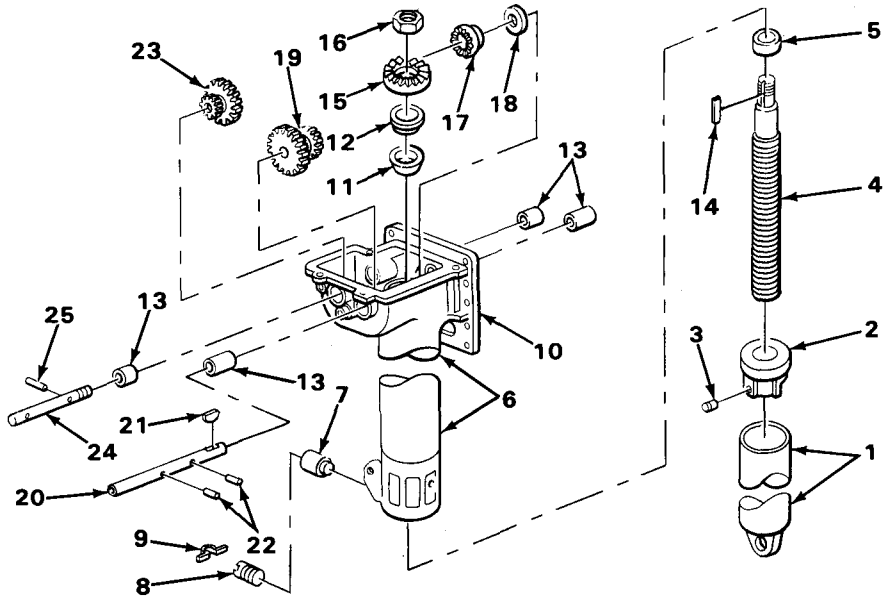

TA231365

LANDING GEAR AND BRACKET - CONTINUED

LOCATION	ITEM	ACTION **REMARKS**
ASSEMBLY - CONTINUED		
65. Gearbox (1)	Spring (2) and ball (3)	Put in.
66. Gearbox (1) and upper leg (4)	Lubrication fittings (5)	Screw in, and tighten using 7/16-inch open-end wrench.
67. Gearbox (1)	Gasket (6) and cover (7)	a. Pack gearbox (1) with grease. b. Place gasket (6) and cover (7) in position.
68. Cover (7)	Four screw and washer assem-blies (8)	Screw in, and tighten using 3/8-inch flat-tip screwdriver.
69. Crank shaft (9)	Coupling (10)	Slide over.
70. Coupling (10)	Shaft (11)	Put in.
71.	Two screws (12) and nuts (13)	Screw together, and tighten using two 9/16-inch open-end wrenches.
72. Shaft (11)	Bracket (14)	Slide part way over shaft (11).
73.	Stowage bracket (15)	Put on.
74. Gearbox (1)	Bracket (14)	Position against gearbox (1).

LANDING GEAR AND BRACKET - CONTINUED

LOCATION	ITEM	ACTION **REMARKS**
ASSEMBLY - CONTINUED		
75. Bracket (14) and gearbox (1)	Three screws (16) and lockwashers (17)	Screw in, and tighten using 3/4-inch socket and ratchet handle with 1/2-inch drive.
INSTALLATION		
76. Crossmembers (18)	Two frame mounting brackets (19)	Place in position.
77. Two frame mounting brackets (19)	Eight screws (20)	Screw in, and tighten using 11/8-inch socket and ratchet handle with 3/4-inch drive.
78.	Right leg (21)	With help from assistant, put on dolly jack, and using doily jack, place in position.

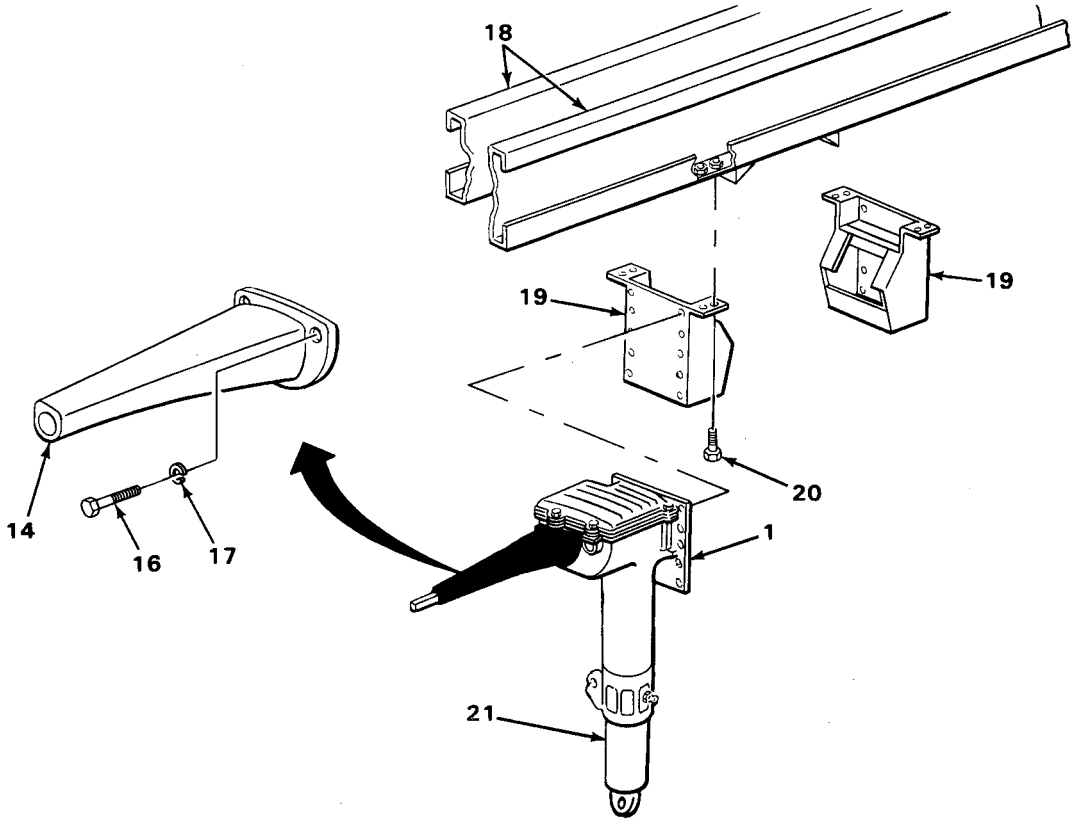

TA231367

LANDING GEAR AND BRACKET - CONTINUED

LOCATION	ITEM	ACTION **REMARKS**
INSTALLATION - CONTINUED		
79. Right leg (1)	Nine screws (2) and nuts (3)	a. Screw together, and tighten using 3/4-inch socket, ratchet handle with 1/2-inch drive, and 3/4-inch open-end wrench. b. Repeat steps 78 and 79 on left leg (4).
80. Right leg (1) and left leg (4)	Brace (5)	Place in position, and weld (TM 9-237).
81. Right leg (1)	Right brace (6)	Place in position.
82. Right brace (6)	Nut (7) and two screws (8)	a. Screw together, and tighten using 15/16-inch socket, ratchet handle with 1/2-inch drive, and 15/16-inch open-end wrench. b. Repeat steps 80 and 81 for left brace.
83. Right lower leg (9)	Plug (10)	a. Screw in, and tighten using 3/16-inch socket-head screw key. b. Repeat on left leg.

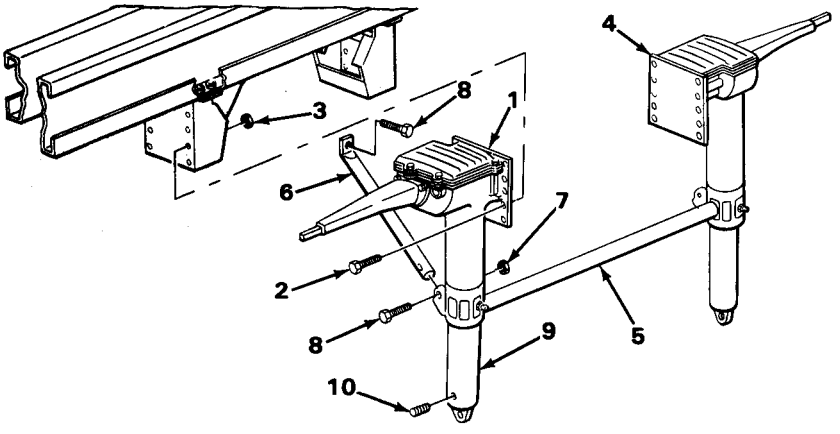

NOTE

FOLLOW-ON MAINTENANCE:

1. Install landing gear handcrank (page 4-154).
2. Install landing gear shoes (page 4-152).
3. Fill landing gear leg (page 4-5).

TASK ENDS HERE

TA231368

Section VIII. SPRING MAINTENANCE

U-BOLTS, RADIUS ROD AND BRACKET, AND SPRING

This task covers:

a. Removal (page 5-64)
b. Installation (page 5-66)

INITIAL SETUP

Tools

Blocks, wood
Driftpin, steel with brass tip, 1/2-inch
Extension, 1/2-inch drive, 4-inch
Extension, 3/4-inch drive, 6-inch
Hammer, ball-peen, machinist's, 2-lb
Handle, ratchet, 1/2-inch drive
Handle, ratchet, 3/4-inch drive
Jack, hydraulic, 10-ton capacity (two required)
Pliers, slip-joint, straight-nose
Punch, drive-pin, 1-inch

Tools – Continued

Punch, drive-pin, 13/4-inch
Screwdriver, flat-tip, 3/16-inch
Socket, 1/2-inch drive, 5/8-inch
Socket, 1/2-inch drive, 15/16-inch
Socket, 3/4-inch drive, 17/16-inch
Trestle, motor vehicle, 8-ton (two required)
Wrench, open-end, 15/16-inch

Personnel Required

Two

Equipment Condition

Brake backing plate removed from axle on side being serviced (pages 4-92 or 4-95).

LOCATION	ITEM	ACTION	REMARKS

NOTE

Both springs and attaching parts are removed and installed the same way. This task is for one; repeat for the other.

U-BOLTS, RADIUS ROD AND BRACKET, AND SPRING - CONTINUED

LOCATION	ITEM	ACTION **REMARKS**
REMOVAL		
1. Screw (1)	Retaining nut (2) and nut (3)	Using 15/16-inch socket, ratchet handle with 1/2-inch drive, and 15/16-inch open-end wrench, unscrew and take off.
2. Radius rod (4) and bracket (5)	Screw (1)	Using 1/2-inch driftpin and ball-peen hammer, tap out.
3. Radius rod bracket (5)	Two retainers (6)	Using 3/16-inch fiat-tip screwdriver, take off.
4. Sleeve bushing (7)	Setscrew (8)	Using 5/8-inch socket, 4-inch extension, and ratchet handle with 1/2-inch drive, unscrew and take out.
5. Radius rod (4) and bracket (5)	Sleeve bushing (7)	a. Using 1-inch drive-pin punch and ball-peen hammer, drive out. b. Repeat steps 1 thru 5 for other end. c. Take radius rod (4) off.
6. Two nuts (9)	Two cotter pins (10)	Using straight-nose slip-joint pliers, straighten and take out.
7. Two screws (11)	Two nuts (9)	Using 15/16-inch socket, ratchet handle with 1/2-inch drive, and 15/16-inch open-. end wrench, unscrew and take off.
8. Spring brackets (12)	Two screws (11)	Take out.
9. Two U-bolts (13)	Four nuts (14) and washers (15)	Using 1 7/16-inch socket, 6-inch extension, and ratchet handle with 3/4-inch drive, unscrew and take out.
10. Axle (16) and radius rod bracket (5)	Two U-bolts (13)	Using ball-peen hammer and 1/2-inch driftpin, tap out.
11. Spring (17)	Radius rod bracket (5)	Lift off.
12. Radius rod bracket (5)	Two washers (18)	Take out.
13.	Two rubber bushings (19)	Using 1 3/4-inch drive-pin punch and ball-peen hammer, tap out.

U-BOLTS, RADIUS ROD AND BRACKET, AND SPRING - CONTINUED

LOCATION	ITEM	ACTION **REMARKS**
REMOVAL		
14.	Rubber bumper (20)	Tap out with ball-peen hammer.
15.	Semitrailer frame (21)	a. Place hydraulic jack and wood blocks under semitrailer frame on side being serviced. b. Raise semitrailer enough so spring (17) can be lifted out. c. Put trestle and wood block under frame (21) at rear of semitrailer.

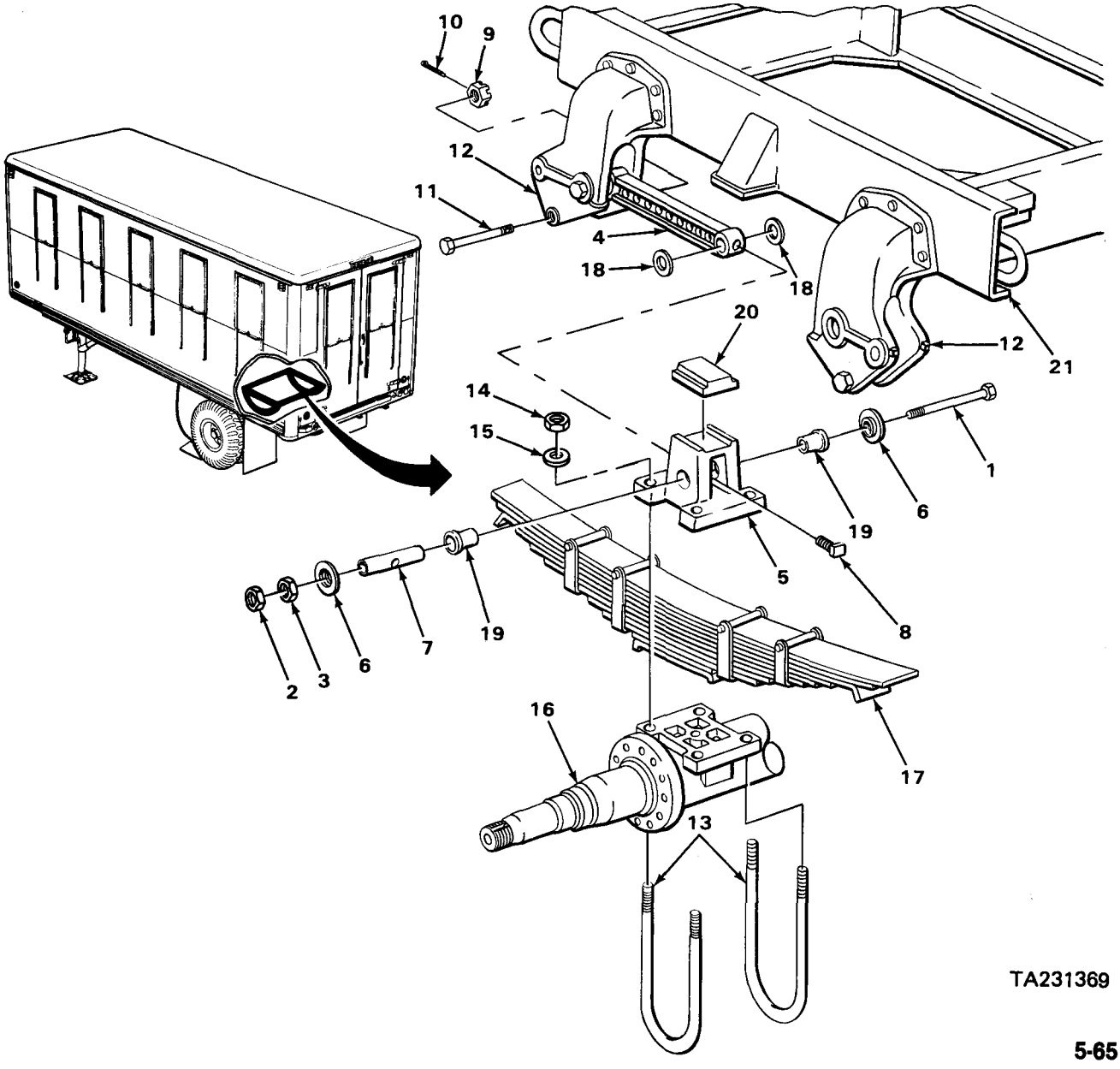

U-BOLTS, RADIUS ROD AND BRACKET, AND SPRING - CONTINUED

LOCATION	ITEM	ACTION **REMARKS**
REMOVAL - CONTINUED		
16. Axle (1)	Spring (2)	With help from assistant, lift off.
INSTALLATION		
	Spring (2)	With help from assistant, put in position.
Radius rod bracket (3)	Rubber bumper (4)	If removed, using ball-peen hammer, tap in.
	Two rubber bushings (5)	If removed, using ball-peen hammer, tap in place.
Spring bracket (6)	Radius rod (7)	Put in position.
Radius rod (7)	Four washers (8)	a. Coat with grease to keep in place. b. Position on each side of radius rod (7).
Spring (2) and radius rod (7)	Radius rod bracket (3)	a. Locate over end of radius rod, and position on spring (2). b. Aline U-bolt holes.
Radius rod (7) and spring bracket (6)	Sleeve bushing (9)	Using 1-inch drive-pin punch and ball-peen hammer, tap in. **Make sure setscrew hole in bushing lines up with setscrew hole in radius rod.**
Sleeve bushing (9)	Setscrew (10)	Screw in, and tighten using 5/8-inch socket, 4-inch extension, and ratchet handle with 1/2-inch drive.
Spring bracket (6)	Two retainers (11)	Place on each side.
Radius rod (7) and spring bracket (6)	Screw (12)	Using ball-peen hammer and 1/2-inch driftpin, tap through.
Screw (12)	Nut (13) and retaining nut (14)	a. Screw on, and tighten using 15/16-inch socket, ratchet handle with 1/2-inch drive, and 15/16-inch open-end wrench. b. Repeat steps 23 thru 27a for other end of radius rod (7).
	Semitrailer frame (15)	a. Take trestle out from under frame (15).

U-BOLTS, RADIUS ROD AND BRACKET, AND SPRING - CONTINUED

LOCATION	ITEM	ACTION REMARKS
INSTALLATION - CONTINUED		
28. Continued		b. Using hydraulic jack, lower until some weight is placed on springs (2).
29. Axle (1) and radius rod bracket (3)	Two U-bolts (16)	Using ball-peen hammer, tap though mounting holes.
30. Two U-bolts (16)	Four nuts (17) and washers (18)	Screw on, and tighten using 1 7/16-inch socket, 6-inch extension, and ratchet handle with 3/4-inch drive.
31. Spring brackets (6)	Two screws (19)	Push through.
32. Two screws (19)	Two nuts (20)	Screw on, and tighten using 15/16-inch socket, ratchet handle with 1/2-inch drive, and 15/16-inch open-end wrench.
33. Two nuts (20)	Two cotter pins (21)	Put through nuts, and using straight-nose slip-joint pliers, bend legs.
34.	Semitrailer frame (15)	a. Using hydraulic jack, lower. b. Remove hydraulic jack and wood blocks.

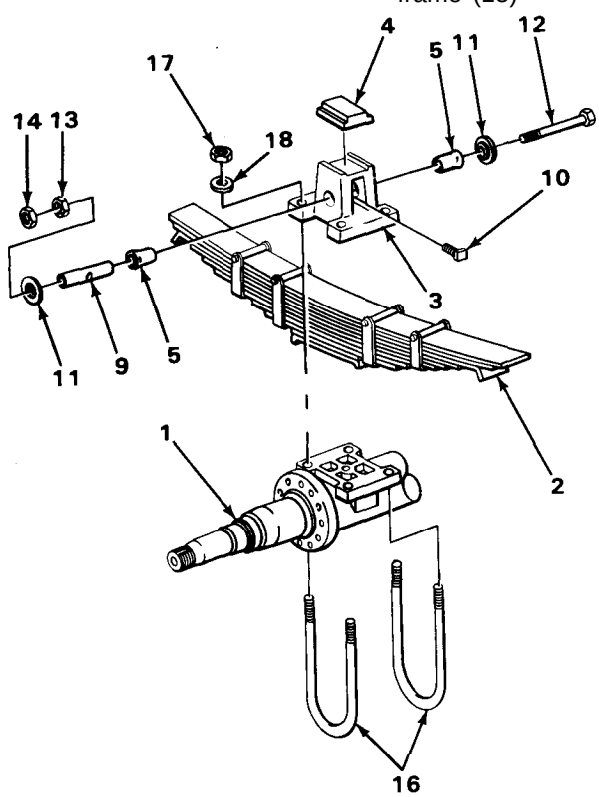

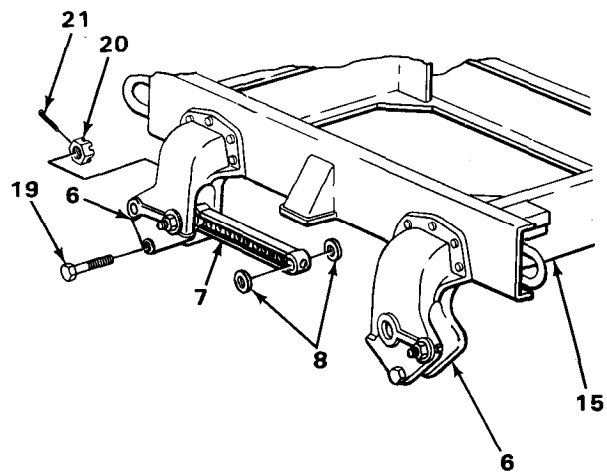

TA231370

U-BOLTS, RADIUS ROD AND BRACKET, AND SPRING - CONTINUED

INSTALLATION - CONTINUED

NOTE

FOLLOW-ON MAINTENANCE: Install brake backing plate (pages 4-92 or 4-95).

TASK ENDS HERE

SPRING BRACKETS

This task covers:

a. Removal (page 5-69)
b. Installation (page 5-70)

INITIAL SETUP

Tools

Blocks, wood
Driftpin, steel with brass tip, 1/2-inch
Extension, 1/2-inch drive, 4-inch
Face, inserted hammer
Hammer, machinist's, bail-peen, 1-lb
Handle, ratchet, 3/8-inch drive
Handle, ratchet, 1/2-inch drive
Holder, inserted hammer-face
Jack, hydraulic, 10-ton capacity
Pliers, slip-joint, straight-nose
Punch, drivepin, 1/2-inch
Punch, drive-pin, 1-inch
Screwdriver, fiat-tip, 3/8-inch
Socket, 1/2-inch drive, 5/8-inch

Tools - Continued

Socket, 1/2-inch drive, 3/4-inch
Socket, 1/2-inch drive, 15/16-inch
Star socket, 3/8-inch drive, 3/8-inch
Trestle, motor vehicle, 8-ton
Wrench, open-end, 3/4-inch
Wrench, open-end, 15/16-inch

Materials/Parts

Grease, GAA (item 10, appendix E)

Personnel Required

Two

Equipment Condition

Brake backing plate removed from axle on side being serviced (pages 4-92 or 4-95).

LOCATION	ITEM	REMARKS

NOTE

Both springs and attaching parts are removed and installed the same way. This task is for one; repeat for the other.

SPRING BRACKETS - CONTINUED

LOCATION	ITEM	ACTION **REMARKS**
REMOVAL		
1. Screw (1)	Retaining nut (2) and nut (3)	Using 15/16-inch socket, ratchet handle with 1/2-inch drive, and 15/16-inch open-end wrench, unscrew and take off.
2. Radius rod (4) and spring bracket (5)	Screw (1)	Using 1/2-inch driftpin and ball-peen hammer, tap out.
3. Spring bracket (5)	Two retainers (6)	Take off. **You may have to pry off with 3/8. inch flat-tip screwdriver.**
4. Sleeve bushing (7) and radius rod (4)	Setscrew (8)	Using 5/8-inch socket, 4-inch extension, and ratchet handle with 1/2-inch drive, unscrew and take out.
5. Radius rod (4) and spring bracket (5)	Sleeve bushing (7)	Using 1-inch drive-pin punch and ball-peen hammer, drive out.
6. Two nuts (9)	Two cotter pins (10)	Using straight-nose slip-joint pliers, straighten and pull out.
7. Two screws (11)	Two nuts (9)	Using 15/16-inch socket, ratchet handle with 1/2-inch drive, and 15/16-inch open-end wrench, unscrew and take off.

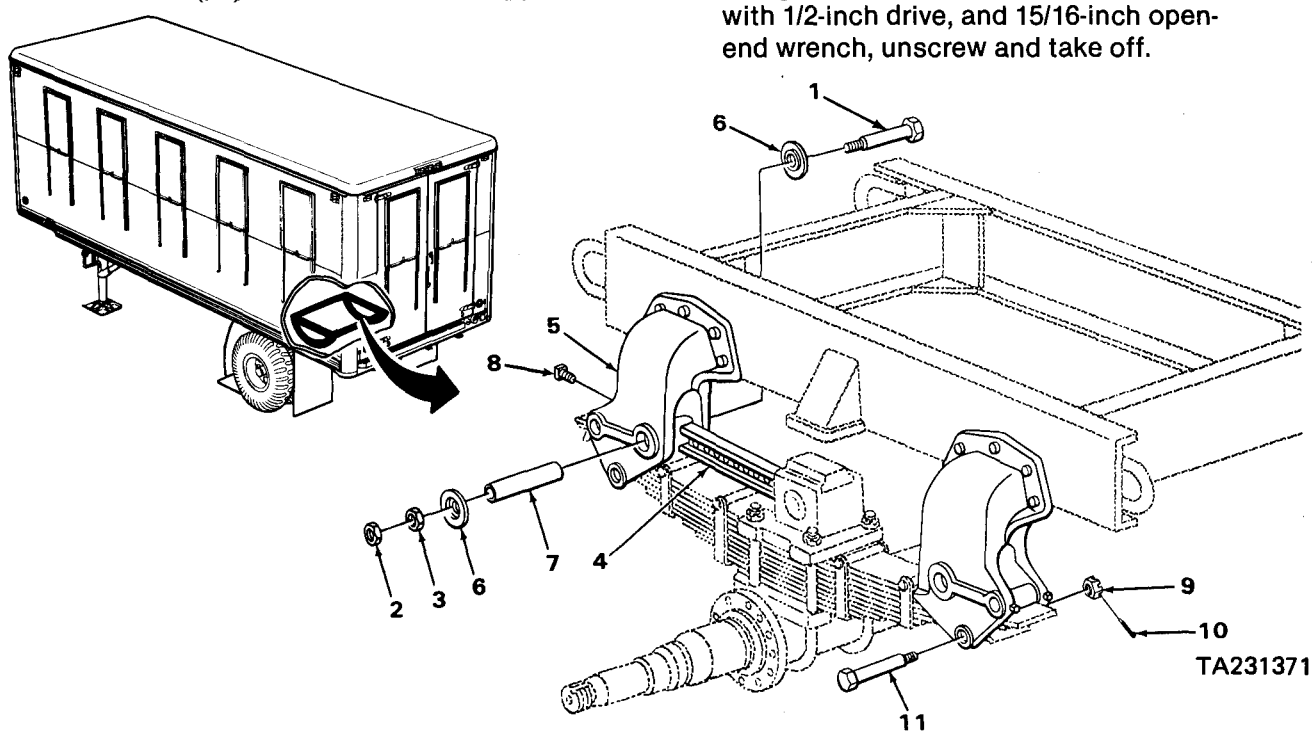

SPRING BRACKETS - CONTINUED

LOCATION	ITEM	ACTION **REMARKS**
REMOVAL - CONTINUED		
8. Spring brackets (1) and (2)	Two screws (3)	Using ball-peen hammer and 1/2-inch driftpin, tap out.
9.	Semitrailer frame (4)	a. Place hydraulic jack and wood blocks, if necessary, under semitrailer frame on side being serviced. b. Raise trailer 6 inches (152 mm). c. Put trestle and wood block under frame at rear of semitrailer.

NOTE

Each spring bracket is fastened with eight screws and nuts. Two screws are longer than the others. Note their location.

10.	16 screws (5) and nuts (6)	Using 3/4-inch socket, ratchet handle with 1/2-inch drive, and 3/4-inch wrench, unscrew and take off.
11. Frame (4)	Spring brackets (1) and (2)	Take off.
12. Spring brackets (1) and (2) and shafts (7)	Four lockscrews (8)	Using 3/8-inch star socket and ratchet handle with 3/8-inch drive, unscrew, but do not remove.
13. Spring brackets (1) and (2)	Two shafts (7)	Using 1/2-inch drive-pin punch and ball-peen hammer, drive out.
14.	Two bearings (9) and four washers (10)	Using plastic-face hammer, tap out.
15. Radius rod (11) or spring bracket (1)	Two washers (12)	Remove from either radius rod or spring bracket.
16. Spring bracket (1)	Two rubber bushings	Using 1/2-inch drive-pin punch and ball-peen hammer, tap out. Remove only if damaged.
INSTALLATION		
17.	Two rubber bushings (13)	If removed, using plastic-face hammer, tap in.

SPRING BRACKETS - CONTINUED

LOCATION	ITEM	ACTION **REMARKS**
INSTALLATION - CONTINUED		
18. Spring brackets (1) and (2)	Two bearings (9) and four washers (10)	Position in brackets, and line up holes.
19.	Two shafts (7)	Using 1/2-inch drive-pin punch and ball-peen hammer, tap in. **Make sure lockscrew holes line up.**
20. Two shafts (7)	Four lockscrews (8)	Tighten using 3/8-inch star socket and ratchet handle with 3/8-inch drive.
21. Radius rod (11)	Two washers (12)	a. Coat with grease, and place on each side of rod. b. Lineup holes.
22. Semitrailer frame (4)	Spring brackets (1) and (2)	Position on frame. **See that radius rod with washers is seated in spring bracket with holes lined up.**
23. Spring brackets (1) and (2)	16 screws (5) and nuts (6)	a. Put longer screws in correct location. b. Screw together, and tighten using 3/4-inch socket, ratchet handle with 1/2-inch drive, and 3/4-inch open-end wrench.

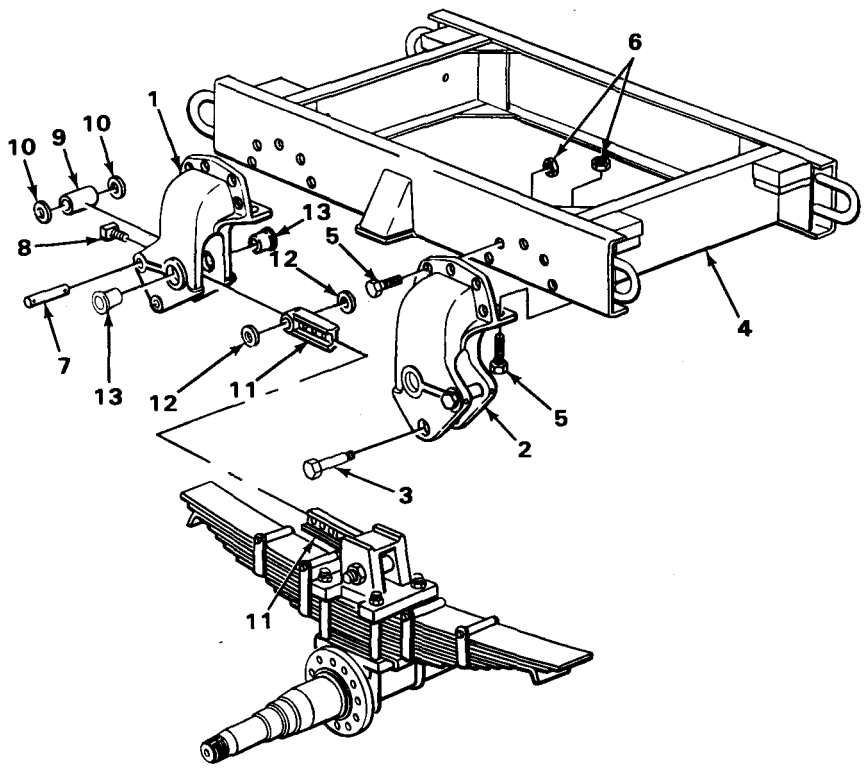

TA231372

SPRING BRACKETS - CONTINUED

LOCATION	ITEM	ACTION **REMARKS**
INSTALLATION - CONTINUED		
24.	Semitrailer frame (1)	Lower semitrailer so spring (2) is engaged with spring brackets (3) and (4).
25. **Radius** rod (5) and spring bracket (3)	Sleeve bushing (6)	Using 1-inch drive-pin punch and ball-peen hammer, tap in. **Make sure setscrew hole in bushing lines up with setscrew hole in radius rod.**
26. Sleeve bushing (6) and radius rod (5)	Setscrew (7)	Screw in, and tighten using 5/8-inch socket, 4-inch extension, and ratchet handle with 1/2-inch drive.
27. Spring bracket (3)	Retainers (8)	Place on each side.
28. Radius rod (5) and spring bracket (3)	Screw (9)	Using plastic-face hammer, tap through.
29. Screw (9)	Nut (10) and retaining nut (11)	Screw on, and tighten using 15/16-inch socket, ratchet handle with 1/2-inch drive, and 15/16-inch open-end wrench.
30. Spring brackets (3) and (4)	Two screws (12)	Using plastic-face hammer, tap through.
31. Two screws (12)	Two nuts (13)	Screw on, and tighten using 15/16-inch socket, ratchet handle with 1/2-inch drive, and 15/16-inch wrench.
32. **Two** nuts (13)	Two cotter pins (14)	Put through, and using slip-joint pliers, bend legs.
33.	Semitrailer frame (1)	a. Using hydraulic jack, lower. b. Remove hydraulic jack, wood blocks, and trestle.

SPRING BRACKETS - CONTINUED

INSTALLATION – CONTINUED

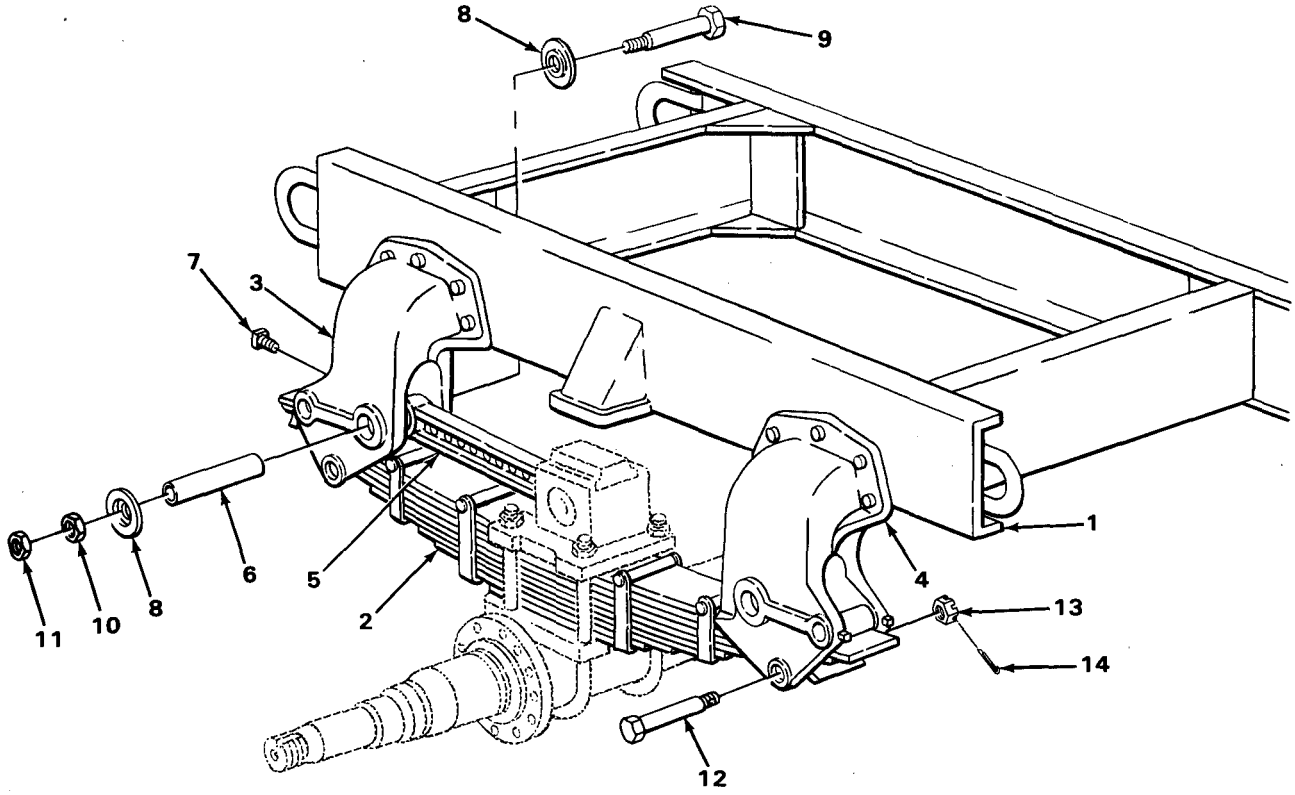

NOTE

FOLLOW-ON MAINTENANCE: Install brake backing plate (page 4-92 or 4-95).

TASK ENDS HERE

RADIUS RODS

This task covers:

Adjustment (page 5-74)

INITIAL SETUP

Tools	Personnel Required
Tape, measuring Wrench, open-end, 3/4-inch (two required) Wrench, open-end, 15/16-inch Wrench, open-end, 1 l/2-inch	Two

TA231373

RADIUS RODS - CONTINUED

LOCATION	ITEM	ACTION **REMARKS**
ADJUSTMENT		
1. Non-adjustable radius rod (1), radius rod bracket (2), and spring bracket (3)	Screw (4) and screw (5)	Measure, and make note of the distance between center of screw (4) and center of screw (5).
2. Screws (6)	Nuts (7)	Using two 3/4-inch open-end wrenches, loosen.
3. Adjustable radius rod (8), radius rod bracket (9), and spring bracket (10)	Screw (11) and screw (12)	Measure distance between center of screw (11) and center of screw (12). **If measurement is the same, go to step 5. If not, continue with step 4.**
4.	Adjustable radius rod (8)	Using 1 1/2-inch open-end wrench, turn body either right or left to lengthen or shorten rod to same measurement as noted in step 1.
5. Screws (6)	Nuts (7)	Using two 3/4-inch open-end wrenches, tighten.

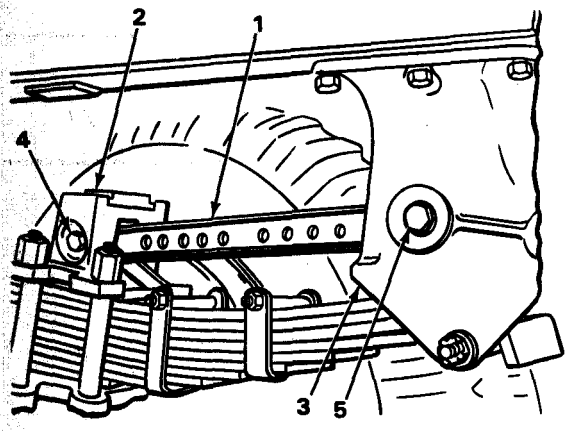

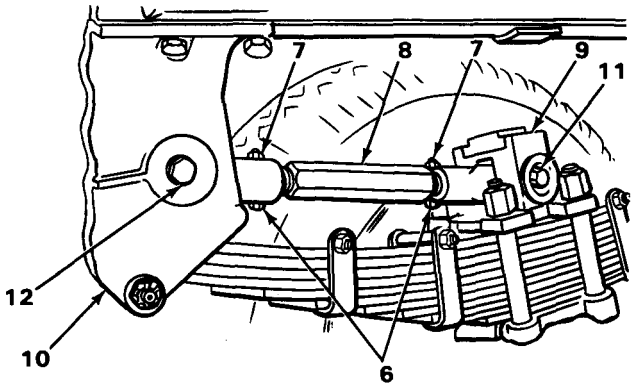

TASK ENDS HERE

TA231374

Section IX. BODY MAINTENANCE

SIDE DOOR AND RIGHT REAR DOOR

This task covers:

Repair (page 5-75)

INITIAL SETUP

Tools

Brush, wire
Hammer, ball-peen, machinist's, l-lb
Handle, ratchet, l/2-inch drive
Pliers, long round-nose
Punch, drive-pin, l/16-inch
Punch, drive-pin, l/8-inch
Punch, drive-pin, 3/16-inch
Screwdriver, cross-tip, number two
Screwdriver, flat-tip, 3/16-inch
Socket, l/2-inch drive, l/2-inch
Wrench, open-end, l/2-inch

Materials/Parts

Adhesive (item 1, appendix E)
Rivets, blind (as required)

Personnel Required

One

Equipment Condition

Side door removed if being repaired (page 4-166).
Right rear door removed if being repaired (page 4-166).

LOCATION	ITEM	ACTION	REMARKS

REPAIR

NOTE

The procedure for repairing the side door and right rear door is the same except for the exterior handles. Any differences will be so noted in the procedure.

Disregard any difference in the number of panel rivets used on your doors as compared to the number shown in this procedure. This may vary.

SIDE DOOR AND RIGHT REAR DOOR - CONTINUED

LOCATION	ITEM	ACTION **REMARKS**
REPAIR – CONTINUED		
1. Actuator (1)	Two screws (2) and lockwasher (3)	Using number two cross-tip screwdriver, unscrew and take off.
2. Door (4)	Actuator (1)	Take off.
3. Four inner frame strips (5)	16 screws (6)	Using number two cross-tip screwdriver, unscrew and take off.
4.	26 rivets (7)	Using 1/8-inch drive-pin punch and ball-peen hammer, drive punch through center of rivet head with a solid blow of hammer. Rivet heads will either fall off or can be lifted off with screwdriver.
5. Door (4)	Four inner frame strips (5)	Lift off.
6. Post (8)	Cotter pin (9)	Using pliers, straighten legs and pull out,
7.	Strap (10) and spring washer (11)	Lift off.
8. Guide (12)	Strap (10)	Pull out.
9. Strap (10)	Screw assembly (13)	Using 3/16-inch flat-tip screwdriver, unscrew and take out.
10.	Wedge bolt (14)	Take off.
11. Guide (12)	Four screws (15)	Using number two cross-tip screwdriver, unscrew and take out.
12. Door (4)	Guide (12)	Take off.
13.	Lower strap assembly (16)	Repeat steps 6 thru 12.
14. Handle (17)	Roll pin (18)	Using 1/16-inch drive-pin punch and ball-peen hammer, drive out.
15. Center case (19)	Handle (17)	Pull off.

SIDE DOOR AND RIGHT REAR DOOR - CONTINUED

LOCATION	ITEM	ACTION **REMARKS**
REPAIR - CONTINUED		
16. Center case (19)	Four screws (20)	Using number two cross-tip screwdriver, unscrew and take out.
17. Door (4)	Center case (19) and spacer (21)	Take off.
18. Retainer (22)	Six screws (23)	Using number two cross-tip screwdriver, unscrew and take out.
1.9. Door (4)	Retainer (22) and weatherstrip (24)	a. Take off. b. Using wire brush, clean old adhesive from door (4).

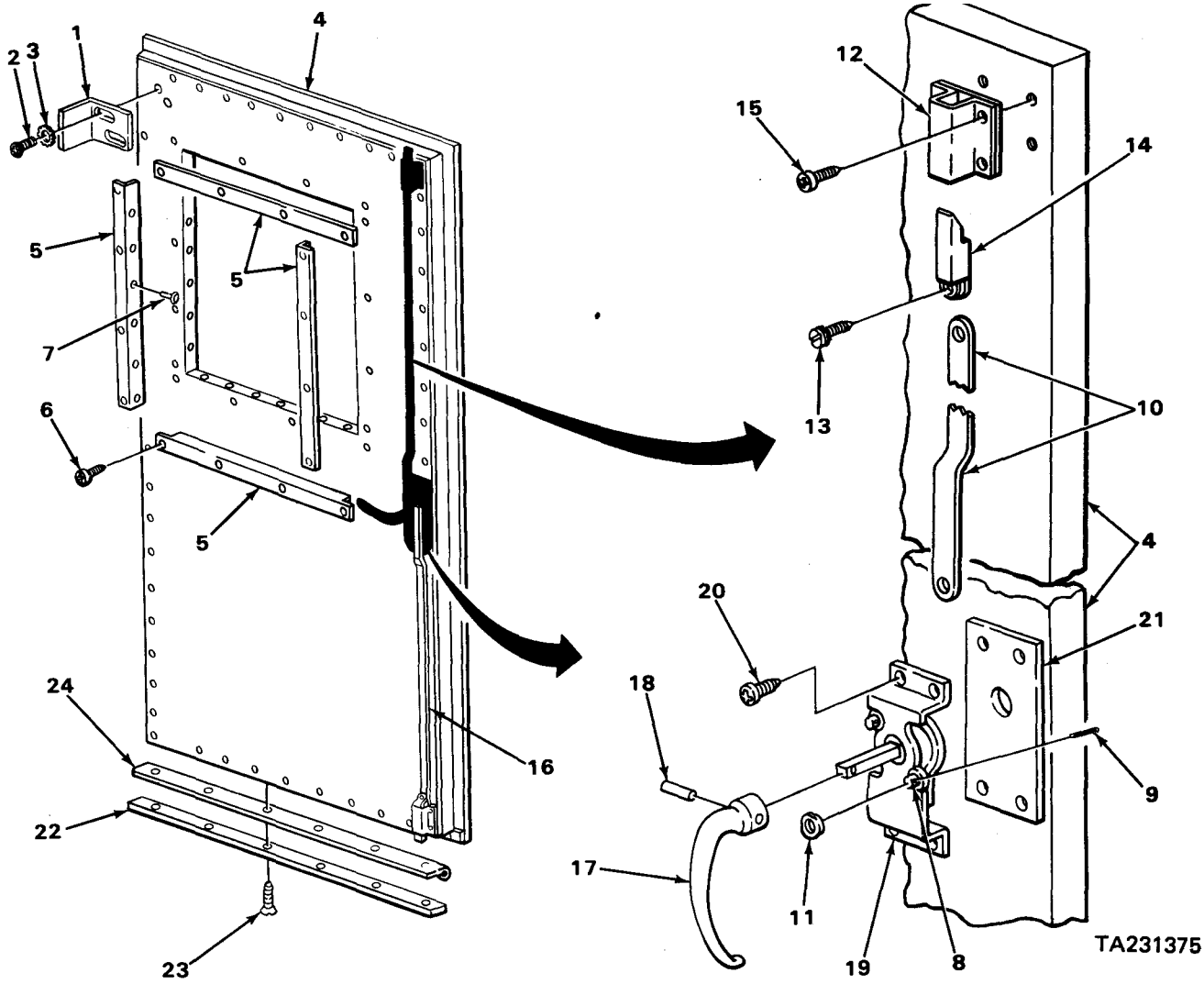

SIDE DOOR AND RIGHT REAR DOOR - CONTINUED

LOCATION	ITEM	ACTION REMARKS
REPAIR - CONTINUED		
20. Interior panel (1)	50 rivets (2)	Using l/8-inch drive-pin punch and ball-peen hammer, drive punch through center of rivet head with a solid blow of hammer. **Rivet heads will either fall off or can be lifted off with screwdriver.**
21. Door (3)	Interior panel (1)	Take off.

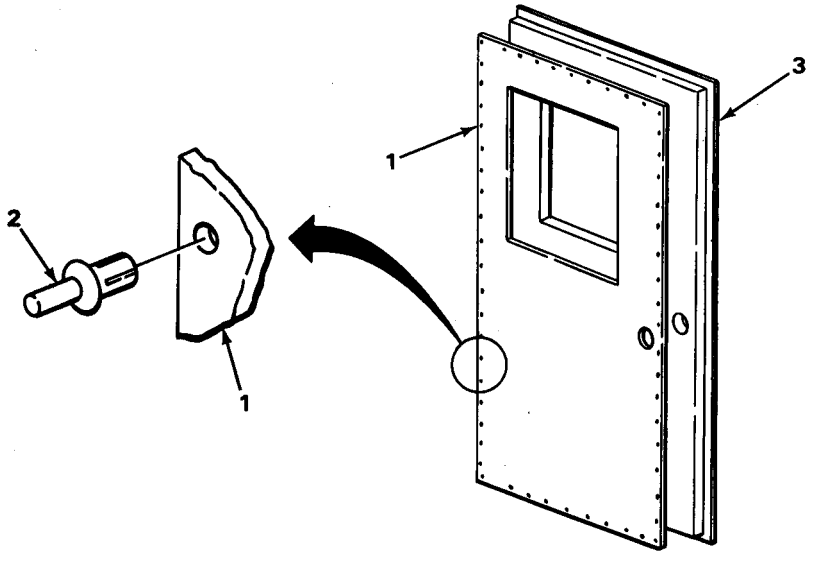

22. Two hinges (4)	Six screws (5) and nuts (6)	Using l/2-inch socket, ratchet handle with l/2-inch drive, and l/2-inch open-end wrench, unscrew and take out.
23. Door (3)	Two hinges (4)	Take off.

NOTE

Steps 24,25,28, and 29 apply to right rear door. Steps 26,27,30, and 31 apply to side door.

TA231376

SIDE DOOR AND RIGHT REAR DOOR - CONTINUED

LOCATION	ITEM	ACTION REMARKS
REPAIR - CONTINUED		
24. Handle (7')	Three screws (8)	Using number two cross-tip screwdriver, unscrew and take out.
25. Door (3)	Handle (7)	Pull off.
26. Handle (9)	Eight screws (10)	Using number two cross-tip screwdriver, unscrew and take out.
27. Door (3)	Handle (9)	Pull off.

NOTE

For window replacement, refer to page 4-157.
For blackout panel replacement, refer to page 4-161.
For screen replacement, refer to page 4-163.

28.	Handle (7)	Place in position.
29. Handle (7)	Three screws (8)	Screw in, and tighten using number two cross-tip screwdriver.
30. Door (3)	Handle (9)	Place in position.
31. Handle (9)	Eight screws (10)	Screw in, and tighten using number two cross-tip screwdriver.

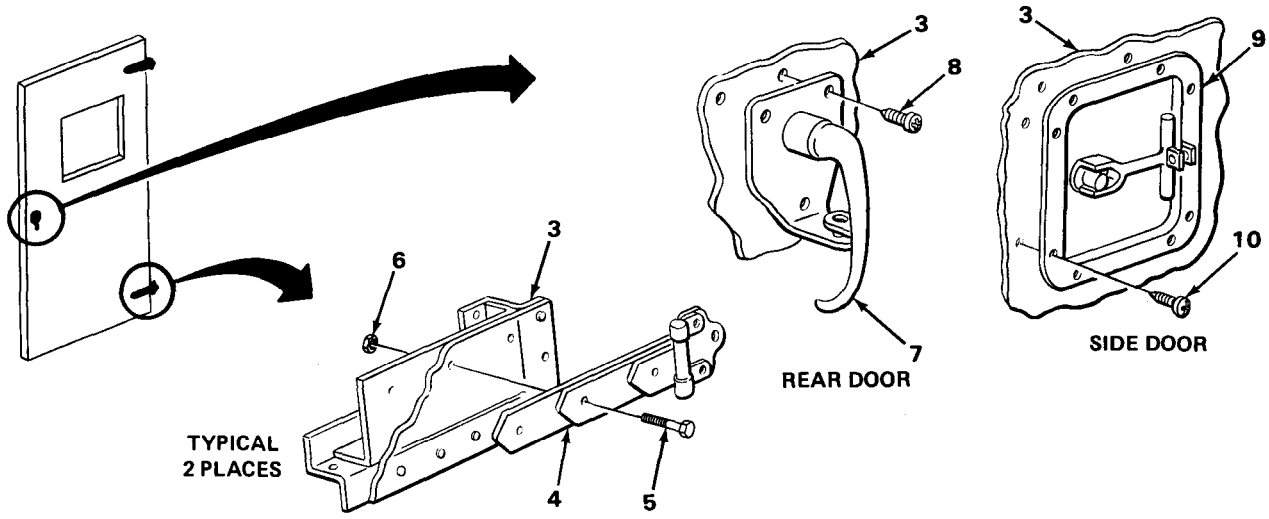

TA231377

SIDE DOOR AND RIGHT REAR DOOR - CONTINUED

LOCATION	ITEM	ACTION REMARKS
REPAIR - CONTINUED		
32. Door(1)	Two hinges (2)	Place in position.
Two hinges (2)	Six screws (3) and nuts (4)	Screw together, and tighten using l/2-inch socket, ratchet handle with l/2-inch drive, and l/2-inch open-end wrench.

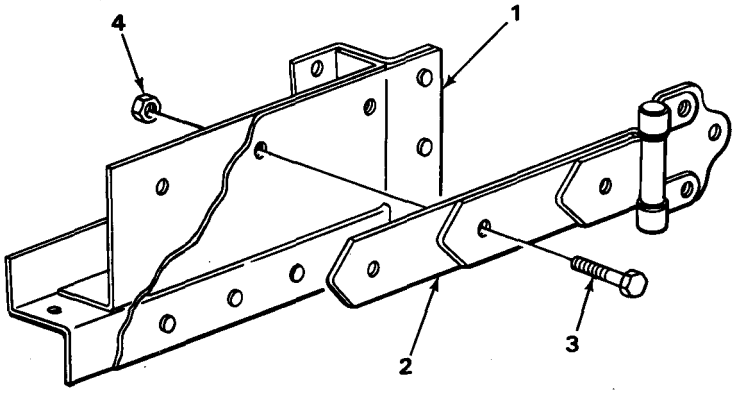

Door(1)	Interior panel (5)	Put on.
Interior panel (5)	50 rivets (6)	a. Fill all holes with a rivet. **Make sure rivet is fully seated.** b. Using 3/16-inch drive pin punch and ball-peen hammer, drive pin (7) flush with head of rivet (6).

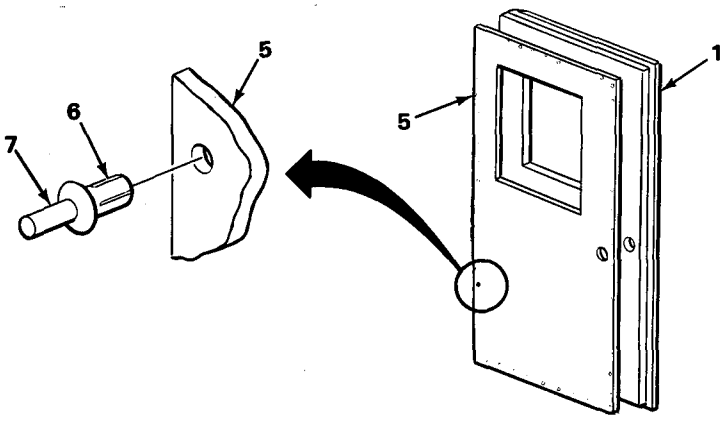

TA231378

SIDE DOOR AND RIGHT REAR DOOR – CONTINUED

LOCATION	ITEM	ACTION REMARKS
REPAIR – CONTINUED		
36. Door (1)	Four inner frame strips (8)	Put on.
37. Four inner frame strips (8)	16 screws (9)	Screw in, and tighten using number two cross-t i p screwdriver.
36.	26 rivets (6)	a. Push one rivet (6) into each hole. Make sure rivet is fully seated. b. Using 3/16-inch drive-pin punch and ball-peen hammer, drive pin (7) flush with head of rivet.
39. Door (1)	Weatherstrip (10) and retainer (11)	a. Apply adhesive to weatherstrip (10) and door (l). b. Place in position.
40. Weatherstrip (10) and retainer (11)	15 screws (12)	Screw in, and tighten using number two cross-tip screwdriver.
41. Door (1)	Actuator (13)	Position on door (1),
42. Actuator (13)	Two screws (14)	Screw in, and tighten using number two cross-t i p screwdriver.

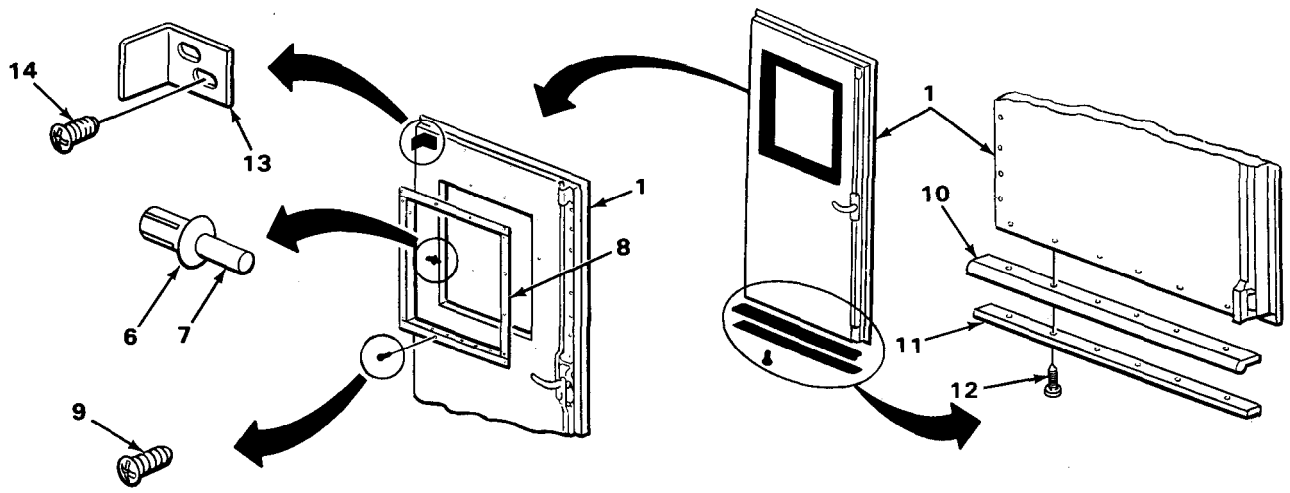

TA231379

SIDE DOOR AND RIGHT REAR DOOR - CONTINUED

LOCATION	ITEM	ACTION REMARKS
REPAIR - CONTINUED		
43. Door (1)	Center case (2) and spacer (3)	Position on door.
and spacer (3)	Four screws (4)	Screw in, and tighten using number two cross-tip screwdriver.
	Handle (5)	Position on door (l).
43. Handle (5)	Roll pin (6)	Using 1/16-inch drive-pin punch and ball-peen hammer, tap in.
	Guide (7)	Position on door(l).
	Four screws (8)	Screw in, and tighten using number two cross-tip screwdriver.
	Wedge bolt (10)	Put on.
39. Strap (9) and wedge bolt (10)	Screw assembly (11)	Screw in, and tighten using 3/16-inch flat-tip screwdriver.
	Strap (9) and wedge bolt (10)	Slide wedge bolt (10) into guide (7).
	Strap (9) and spring washer (13)	Put on.
	Cotter pin (14)	Push through, and using pliers, spread legs.
	Lower strap assembly (15)	Repeat steps 47 thru 53.

SIDE DOOR AND RIGHT REAR DOOR - CONTINUED

REPAIR – CONTINUED

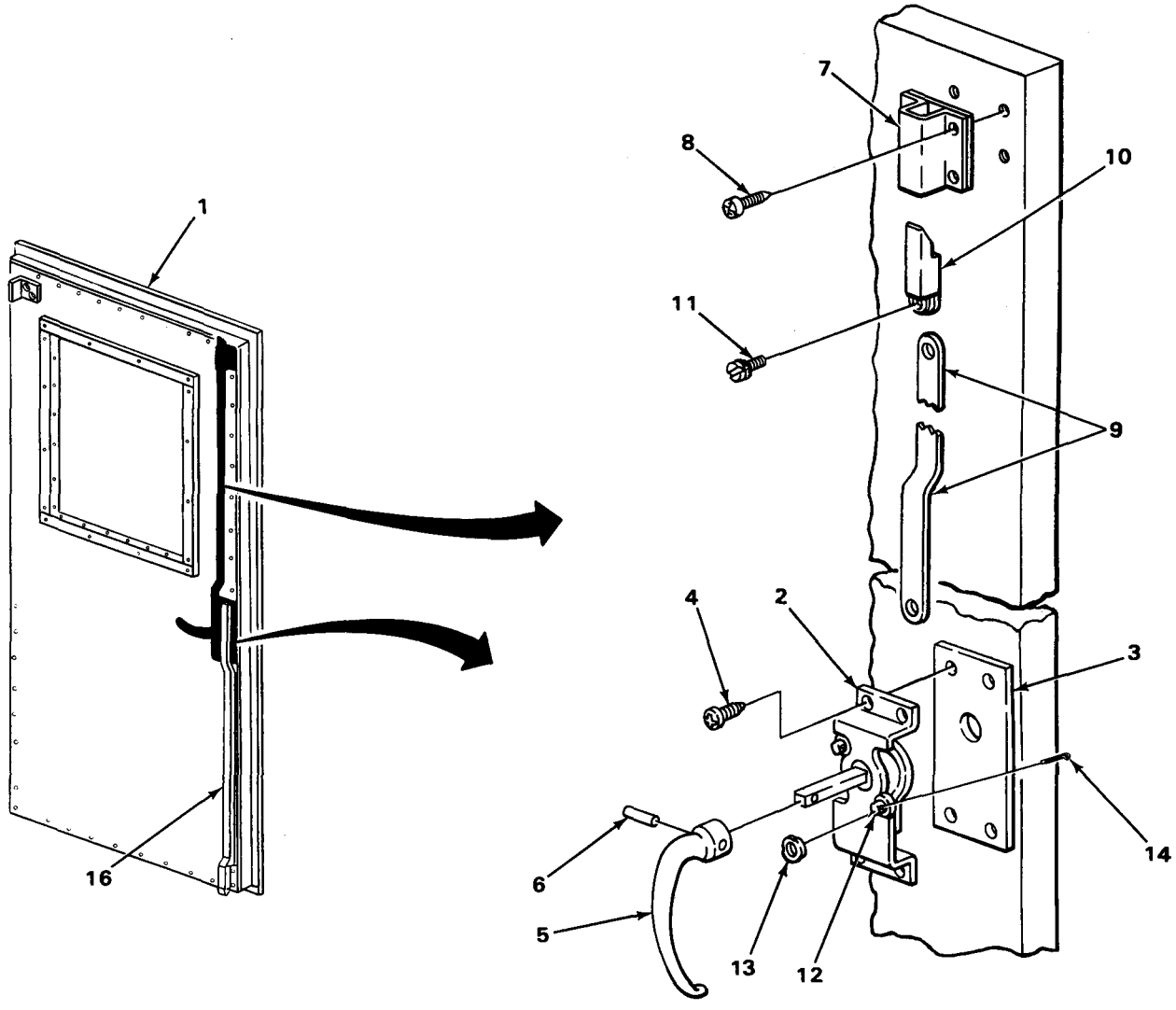

NOTE

FOLLOW-ON MAINTENANCE:

1. Install side door (page 4-166).
2. Install right rear door (page 4-166).

TASK ENDS HERE

TA231380

LEFT REAR DOOR

This task covers:

Repair (page 4-84)

INITIAL SETUP

Tools

Brush, wire
Hammer, ball-been, machinist's, l-lb
Handie, ratchet, l/2-inch drive
Piiers, siipjoint, straight-nose
Punch, drive-pin, l/16-inch
Punch, drive-pin, l/8-inch
Punch, drive-pin, 3/16-inch
Screwdriver, cross-tip, number two
Screwdriver, fiat-tip, 3/8-inch
Socket, l/2-inch drive, l/2-inch
Wrench, open-end, l/2-inch

Materials/Parts

Adhesive (item 1, appendix E)
Rivets, blind (as required)

Personnei Required

One

Equipment Condition

Ladder removed (page 4-183).
Left rear door removed (page 4-166).

LOCATION	ITEM	ACTION	REMARKS

REPAIR

NOTE

Disregard any difference in the number of panel rivets used on your door as compared to the number shown in this procedure. This may vary.

	Four inner frame strips (1)	16 screws (2)	Using number two cross-tip screwdriver, take off.
		26 rivets (3)	a. Using l/8-inch drive-pin punch and bail-peen hammer, drive punch through center of rivet head with a solid biow of hammer. **Rivet heads will either fall off or can be lifted off with screwdriver.** b. Using 3/16-inch drive-pin punch and ball-peen hammer, drive out remaining part of rivet (3).
3. Door(4)	Four inner frame strips (1)	Lift off.	
	Four screws (6)	Using number two cross-tip screwdriver, unscrew and take out.	

LEFT REAR DOOR -CONTINUED

LOCATION	ITEM	ACTION REMARKS
REPAIR – CONTINUED		
5. Door(4)	Latch (5)	Lift off.
6. Rod(7)	Cotter pin (8)	Using slip-joint pliers, straighten and pull out.
7. Clamp(9)	**Two screws (10)**	Using number two cross-tip screwdriver, unscrew and take out.
6. Door(4) and latch (11)	Clamp (9) and rod (7)	Lift off.
9. Latch(11)	Four screws (12)	Using number two cross-tip screwdriver, unscrew and take out.
10. Door (4)	Latch (11)	Lift off.
11. Plate (13)	Four screws (14)	Using number two cross-tip screwdriver, unscrew and take out.
12. Door (4)	Plate (13)	Lift off.
13.	36 screws (15)	Using number two cross-tip screwdriver, unscrew and take out.

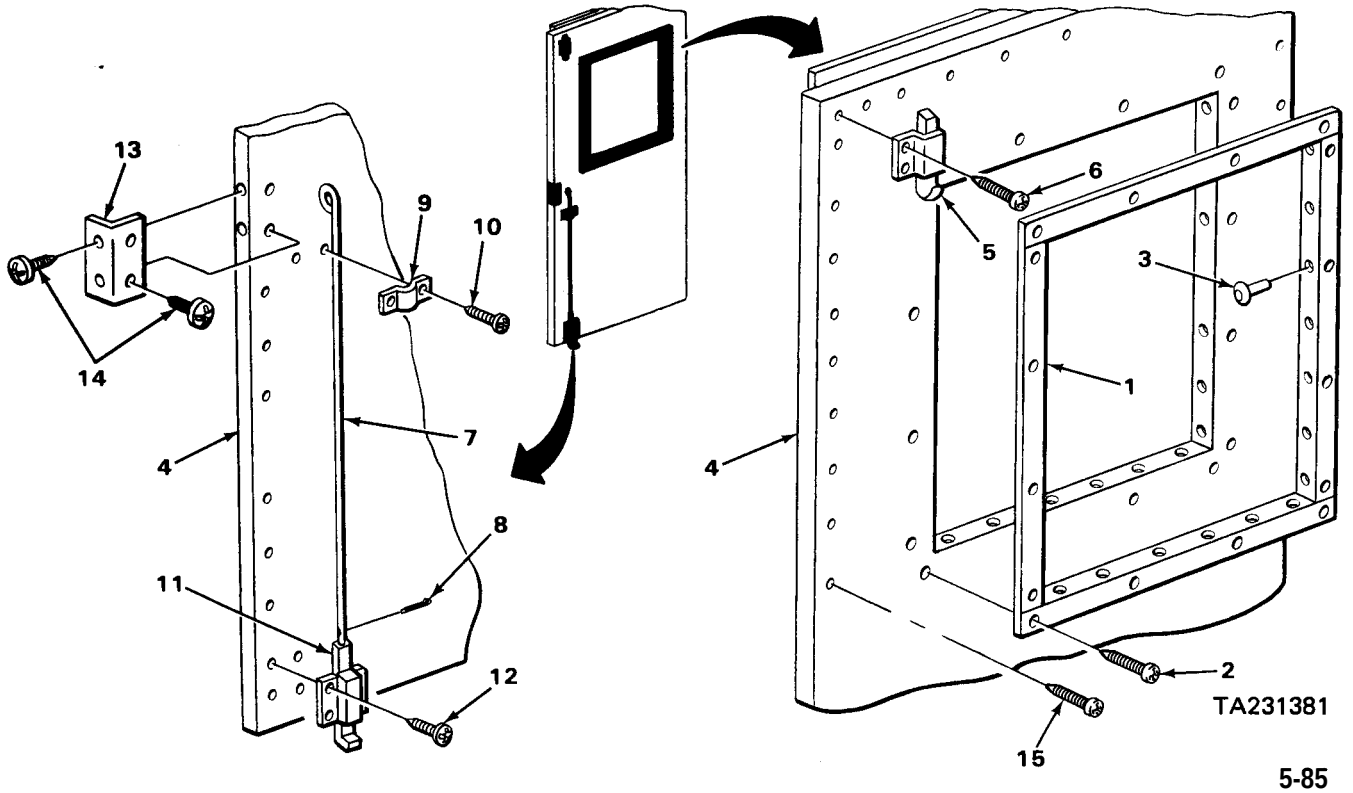

LEFT REAR DOOR - CONTINUED

LOCATION	ITEM	ACTION **REMARKS**
REPAIR - CONTINUED		
14. Interior panel (1)	47 rivets (2)	a. Using 1/8-inch drive-pin punch and ball-peen hammer, drive punch through center of rivet head with a solid blow of hammer. **Rivet heads will either fall off or can be lifted off with screwdriver.** b. Using 3/16-inch drive-pin punch and ball-peen hammer, drive out remaining part of rivet (2).
15. Door (3)	Interior panel (1)	Take off.
16.	Weatherstrip (4)	a. Take off. b. Using wire brush, clean old adhesive from door (3).
17. Retainer (5)	24 screws (6)	Using number two cross-tip screwdriver, unscrew and take off.
18. Door (3)	Retainer (5) and weatherstrip (7)	a. Take off. b. Using wire brush, clean old adhesive from door (3).

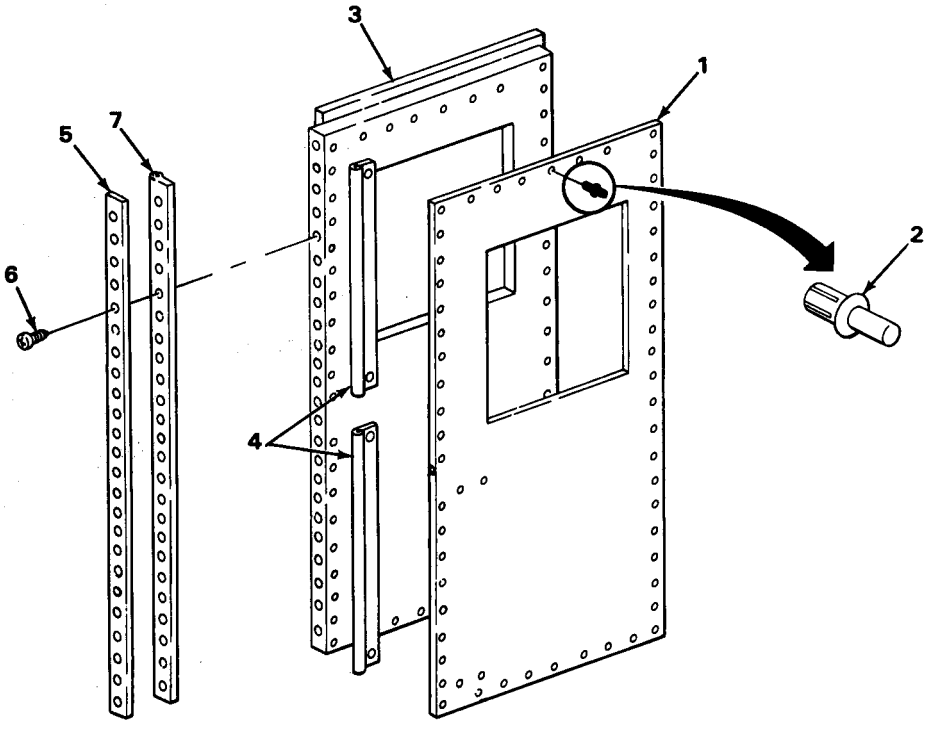

TA231382

LEFT REAR DOOR - CONTINUED

LOCATION	ITEM	ACTION **REMARKS**
REPAIR - CONTINUED		
19. Retainer (8)	14 screws (9)	Using number two cross-tip screwdriver, unscrew and take out.
20. Door (3)	Retainer (8) and weatherstrip (10)	a. Take off. b. Using wire brush, clean old adhesive from door (3).
21. Two hinges (11)	Six screws (12) and nuts (13)	Using 1/2-inch socket, ratchet handle with 1/2-inch drive, and 1/2-inch open-end wrench, unscrew and take out.
22. Door (3)	Two hinges (11)	Take off.

NOTE

For window replacement, refer to page 4-157.
For blackout panel replacement, refer to page 4-161.
For screen replacement, refer to page 4-163.

23. Door (3)	Two hinges (11)	Place in position.
24. Two hinges (11)	Six screws (12) and nuts (13)	Screw together, and tighten using 1/2-inch socket, ratchet handle with 1/2-inch drive, and 1/2-inch open-end wrench.

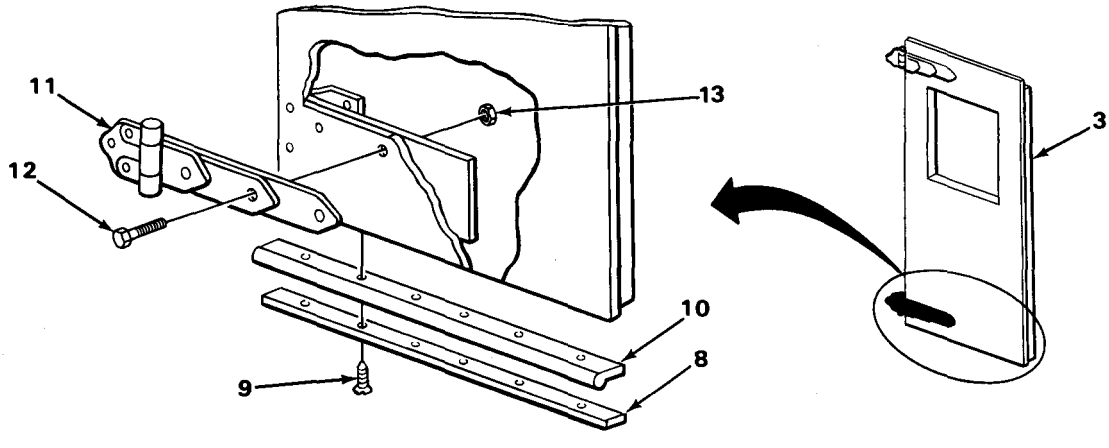

TA231383

LEFT REAR DOOR - CONTINUED

	LOCATION	ITEM	ACTION **REMARKS**
REPAIR - CONTINUED			
25.	Door (1)	Weatherstrip (2) and retainer (3)	a. Apply adhesive to weatherstrip (2) and door (1). b. Place weatherstrip (2) and retainer (3) in position.
26.	Retainer (3)	24 screws (4)	Screw in, and tighten using number two cross-tip screwdriver.
27.	Door (1)	Weatherstrip (5)	a. Apply adhesive to weatherstrip (5) and door (1). b. Place in position.
28.		Weatherstrip (6) and retainer (7)	a. Apply adhesive to weatherstrip (6) and door (1). b. Place weatherstrip (6) and retainer (7) in position.
29.		14 screws (8)	Screw in, and tighten using number two cross-tip screwdriver.
30.	Door (1)	Interior panel (9)	Put on.
31.	Interior panel (9)	47 rivets (10)	a. Fill each hole with rivet (10). Make sure rivet is fully seated. b. Using 3/16-inch drive-pin punch and ball-peen hammer, drive pin (11) flush with head of rivet (10).
32.	Door (1)	36 screws (12)	Screw in, and tighten using number two cross-tip screwdriver.
33.		Plate (13)	Put on.
34.	Plate (13)	Four screws (14)	Screw in, and tighten using number two cross-tip screwdriver.

LEFT REAR DOOR - CONTINUED

LOCATION	ITEM	ACTION **REMARKS**
REPAIR - CONTINUED		
35. Door (1)	Latch (15)	Put on.
36. Latch (15)	Four screws (16)	Screw in, and tighten using number two cross-tip screwdriver.
37. Door (1)	Clamp (17) and rod (18)	Put on.
36. Clamp (17)	Two screws (19)	Screw in, and tighten using number two cross-tip screwdriver.
39. Latch (15)	Rod (18)	Put on.
40. Latch (15) and rod (18)	Cotter pin (20)	Using slip-joint pliers, put through latch post, and spread.

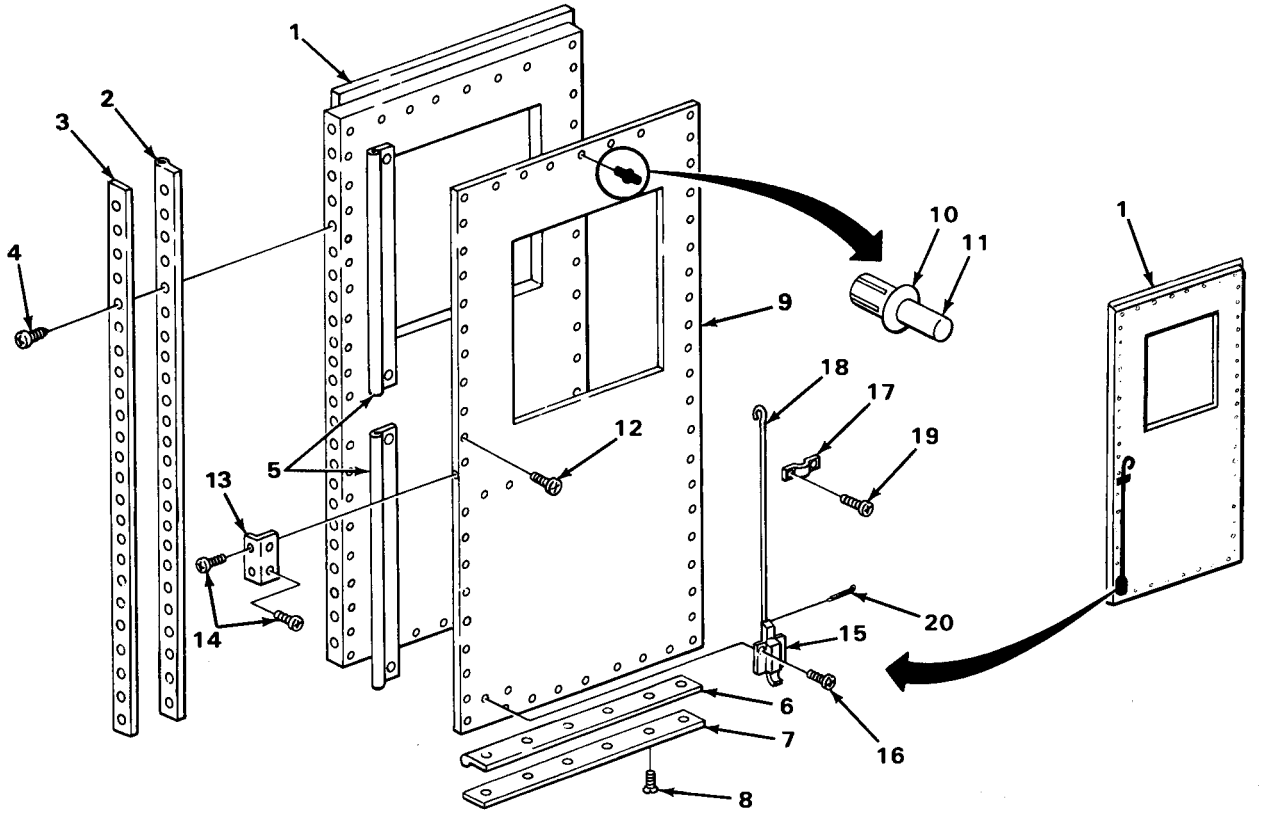

TA231384

LEFT REAR DOOR - CONTINUED

LOCATION	ITEM	ACTION **REMARKS**
REPAIR – CONTINUED		
41. Door (1)	Latch (2)	Put on.
42. Latch (2)	Four screws (3)	Screw in, and tighten using number two cross-tip screwdriver.
43. Door (1)	Four inner frame strips (4)	Put on.
44. Four inner frame strips (4)	16 screws (5)	Screw in, and tighten using number two cross-tip screwdriver.
45.	26 rivets (6)	a. Fill each hole with rivet (6). **Make sure rivet is fully seated.** b. Using 3/16-inch drive-pin punch and ball-peen hammer, drive pin (7) flush with head of rivet (6).

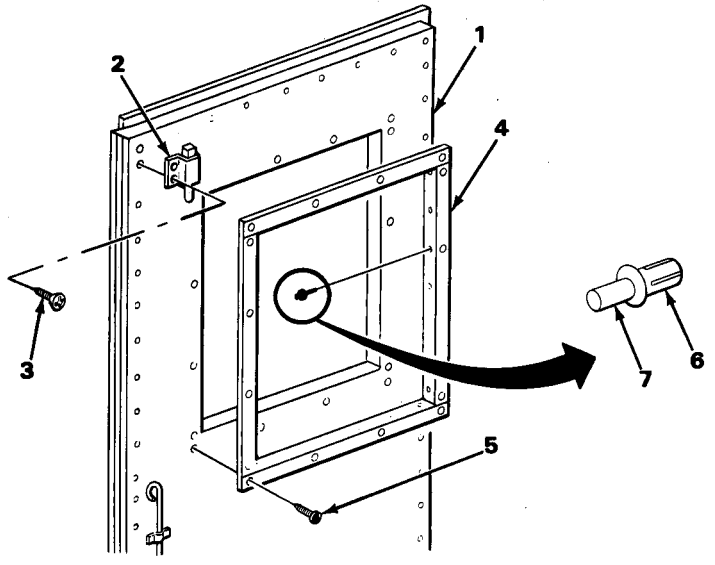

NOTE

FOLLOW-ON MAINTENANCE:

1. Install left rear door (page 4-166).
2. Install ladder (page 4-183).

TASK ENDS HERE

TA231385

DECK

This task covers:

Repair (page 5-91)

INITIAL SETUP

Tools	Personnel Required
Bar, pry	Two
Drill bit, 11/32-inch	
Drill bit, 5/8-inch	
Drill, electric, portable, 1/2-inch	
Hammer, ball-peen, machinist's, 2-lb	
Handle, ratchet, 1/2-inch drive	
Saw, hand, crosscut	
Screwdriver, cross-tip, number two	
Screwdriver, flat-tip, 3/16-inch	
Socket, 1/2-inch drive, 1/2-inch	

LOCATION	ITEM	ACTION **REMARKS**

REPAIR

NOTE

The deck is made up of eighteen long boards laid side by side and eighteen short boards side by side. This is a typical procedure for replacement of one board.

The boards are fitted together with tongue and groove. To replace a board other than the two outer boards, you must remove each board between the damaged board(s) and the closest wall, working from the outside in.

DECK - CONTINUED

LOCATION	ITEM	ACTION **REMARKS**
REPAIR - CONTINUED		
1. Molding (1) at wall nearest board to be replaced	Screws (2)	Using number two cross-tip screwdriver, unscrew and take out.
2. Sidewall	Molding (1)	Take off.

NOTE

Molding will have to be removed from front wall when replacing a short board. Molding on either side of rear doors will be removed when replacing a long board.

Remove threshold plates or striker plates only as required to replace a damaged board.

3. Molding (3)	Screws (4)	Using number two cross-tip screwdriver, unscrew and take out.
4. Rear wall	Molding (3)	Take off.
5. Threshold plate (5)	Four screws (6) and nuts (7)	Using 3/16-inch flat-tip screwdriver, 1/2-inch socket, and ratchet handle with 1/2-inch drive, unscrew and take out.
6. Deck at rear doors	Threshold plate (5)	Using pry bar, take off.
7. Striker plates (8)	Four screws (9) and four screws (10)	a. Using 3/16-inch flat-tip screwdriver, unscrew screws (9) and take out. b. Using number two cross-tip screwdriver, unscrew screws (10) and take out. **Note location of two screw types.**
8. Deck at rear doors	Striker plates (8)	Using pry bar, pry out. Note positioning of plates.
9. Threshold plate (11)	Three screws (12) and nuts (13)	Using 3/16-inch flat-tip screwdriver, 1/2-inch socket, and ratchet handle with 1/2-inch drive, unscrew and take out.
10. Deck at side door	Threshold plate(11)	Using pry bar, pry off.
11. Striker plate (14)	Two screws (15) and two screws (16)	a. Using 3/16-inch flat-tip screwdriver, unscrew screws (15) and take out.

DECK - CONTINUED

LOCATION	ITEM	ACTION **REMARKS**
REPAIR - CONTINUED		
11. Continued		b. Using number two cross-tip screwdriver, unscrew screws (16) and take out. **Note location of two screw types.**
12. Deck at side door	Striker plate (14)	Using pry bar, pry out. **Note positioning of plate.**
13. Harness clamp(s) (17) underside of deck	Screw(s) (18)	Where necessary, using number two cross-tip screwdriver, unscrew and take off.
14. Left rear deck	Plate assembly (19) and plate and catch assembly (20)	If necessary, release catch assembly and take off.

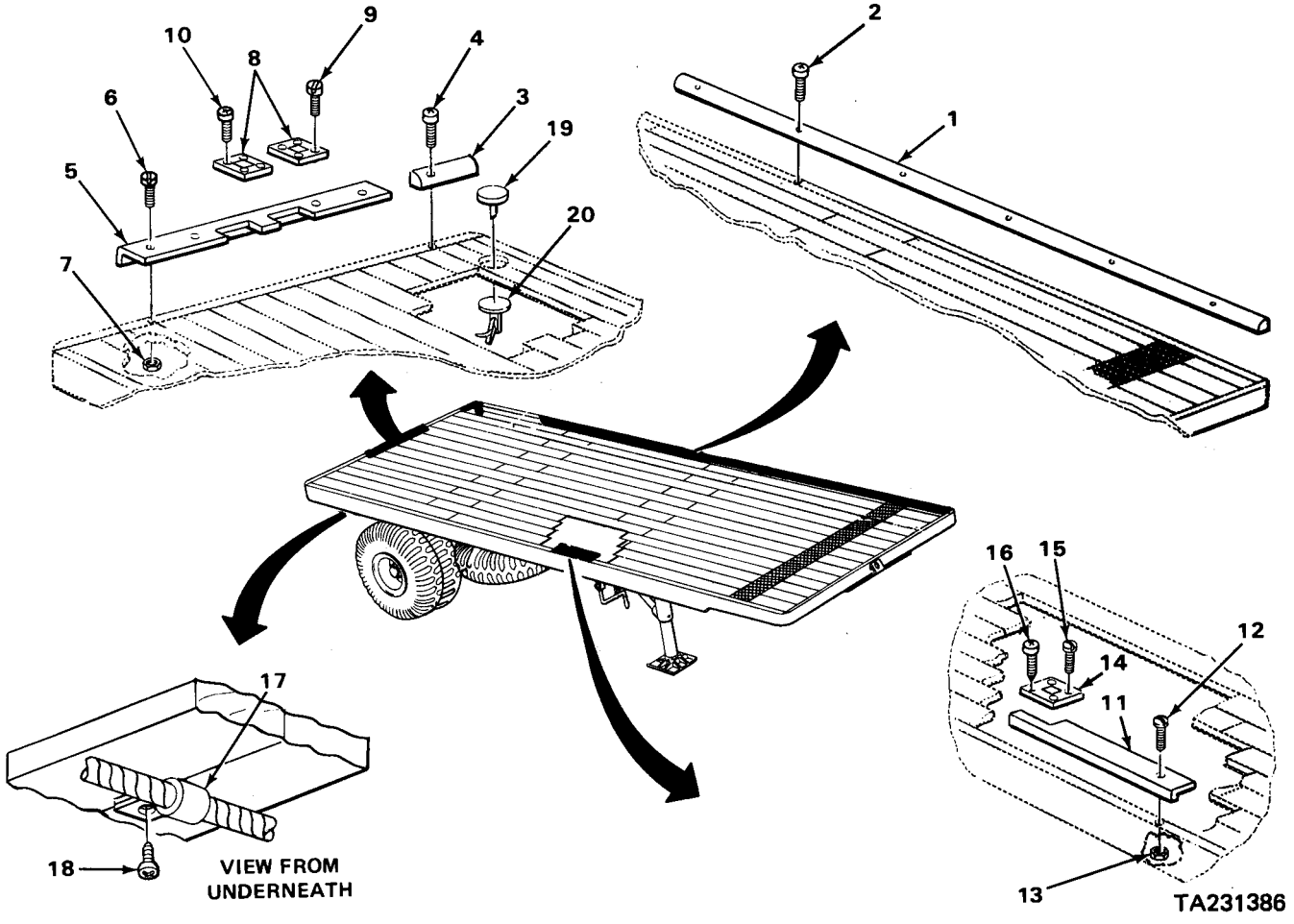

DECK - CONTINUED

LOCATION	ITEM	ACTION **REMARKS**
REPAIR - CONTINUED		
15. Outer board (1) and cross-member (2)	Two screws (3) and nuts (4)	a. With help from assistant and using 3/16-inch flat-tip screwdriver, 1/2-inch socket and ratchet handle with 1/2-inch drive, unscrew and take off from underneath trailer. b. Using flat side of ball-peen hammer, tap out screws (3). d. Remove remaining screws at each crossmember.
16.	Outer board (1)	a. Using pry bar, pry loose from mating board. b. Lift out.
17.	Board (5)	a. Repeat step 15. b. Using pry bar, pry loose from damaged board.
18.	Damaged board (6)	a. Repeat step 15. b. Using pry bar, pry loose and lift out.

NOTE

The same procedure is used to replace the short boards at the front except that the eight center boards are fastened with screws only.

19.	New board (6)	Using hand saw, cut to required size.
20.	New board (6)	a. Have assistant hold board in proper position. b. From underneath semitrailer, use holes in crossmember to mark new board for drilling. c. Take out board. d. Using 1/2-inch electric drill and 11/32-inch drill bit, drill holes as marked. e. Using 1/2-inch electric drill and 5/8-inch drill bit, drill countersink.

DECK - CONTINUED

LOCATION	ITEM	ACTION **REMARKS**
REPAIR - CONTINUED		
21. Deck	New board (6)	Put in place making sure tongue and groove mate with adjoining board.
22. New board (6)	Two screws (3)	Using ball-peen hammer, drive through holes. **Repeat for remaining holes.**
23.	Two screws (3) and nuts (4)	a. Have assistant hold screws (3) with 3/16-inch flat-tip screwdriver. b. Screw on nut (4), and tighten using 1/2-inch socket and ratchet handle with 1/2-inch drive. **Repeat for remaining nuts.**
24. Deck	Board (5)	a. Put in place against new board. b. Repeat step 23.
25.	Board (1)	a. Put in place against mating board. b. Repeat step 23.

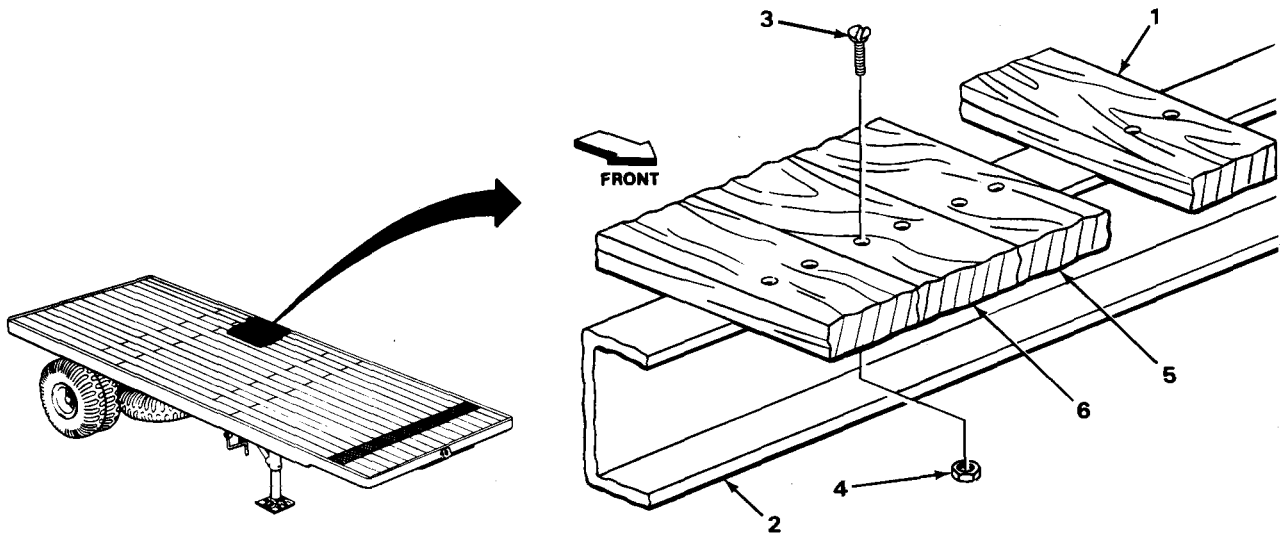

TA231387

DECK - CONTINUED

LOCATION	ITEM	ACTION **REMARKS**
REPAIR - CONTINUED		
26. Left rear deck	Plate assembly (1) and plate and catch assembly (2)	If removed, put through hole in deck and clamp together.
27. Harness clamp(s) (3) underside of deck	Screw(s) (4)	If removed, screw in and tighten using number two cross-tip screwdriver.
28. Deck at side door	Striker plate (5)	If removed, put on.
29. Striker plate (5)	Two screws (6) and two screws (7)	a. Position screws (6) and screws (7) as noted. b. Screw in, and tighten using number two cross-tip screwdriver and 3/16-inch flat-tip screwdriver as needed.
30. Deck at side door	Threshold plate (8)	If removed, put on.
31. Threshold plate (8)	Three screws (9) and nuts (10)	Screw in, and tighten using 3/16-inch flat-tip screwdriver, 1/2-inch socket, and ratchet handle with 1/2-inch drive.
32. Deck at rear doors	Striker plates (11)	If removed, put on and place in original position.
33. Striker plates (11)	Four screws (12) and four screws (13)	a. Position screws (12) and screws (13) as noted. b. Screw in, and tighten using number two cross-tip screwdriver and 3/16-inch flat-tip screwdriver as needed.
34. Deck at rear doors	Threshold plate (14)	If removed, put on.
35. Threshold plate (14)	Four screws (15) and nuts (16)	Screw in, and tighten using 3/16-inch flat-tip screwdriver, 1/2-inch socket, and ratchet handle with 1/2-inch drive.
36. Rear wall	Molding (17)	Put in place.
37. Molding (17)	Screws (18)	Screw in, and tighten using number two cross-tip screwdriver.
38. Side wall	Molding (19)	Put in place.

DECK - CONTINUED

LOCATION	ITEM	ACTION **REMARKS**

REPAIR - CONTINUED

39. Molding (19)	Screws (20)	Screw in, and tighten using number two cross-tip screwdriver.

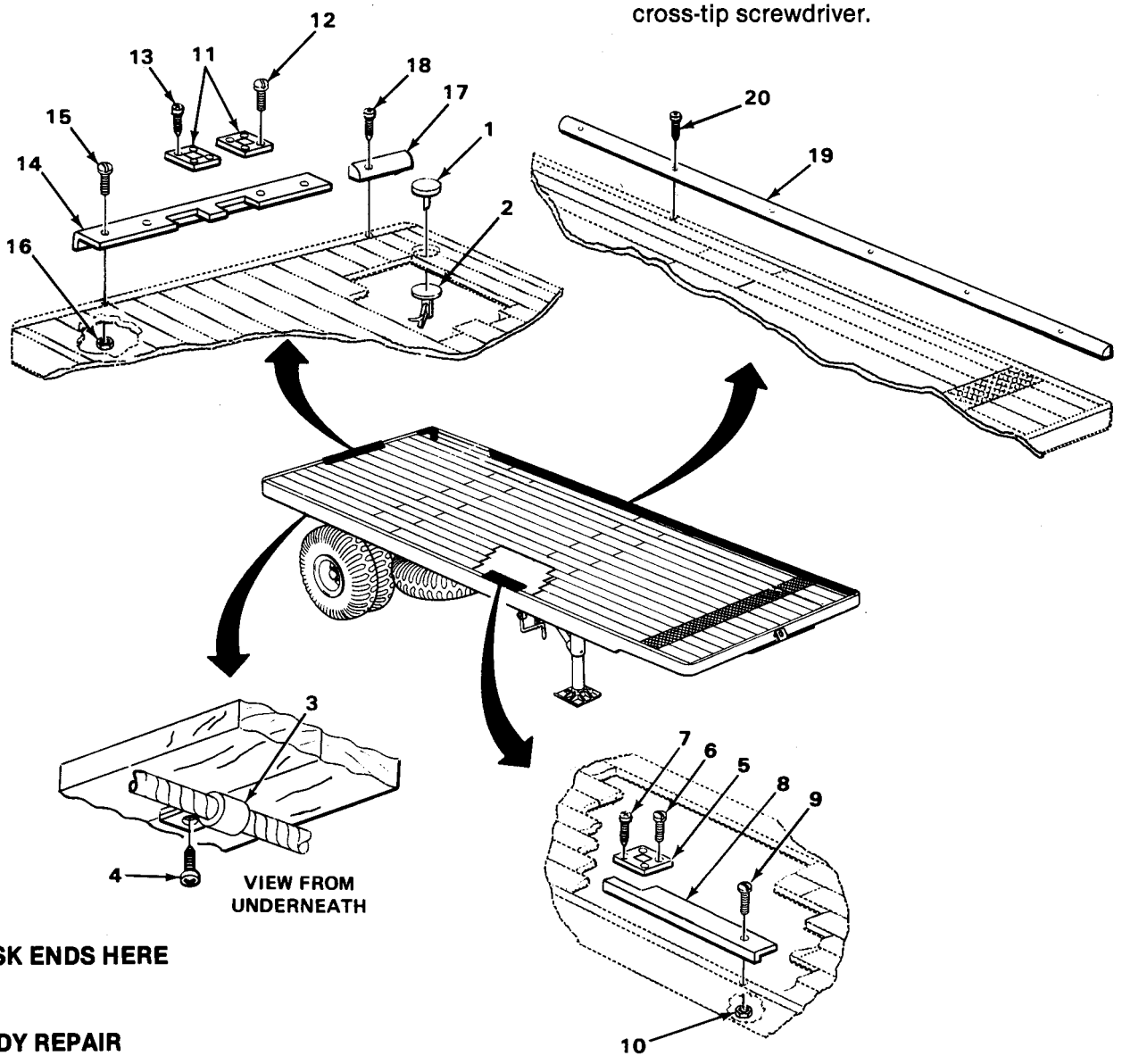

TASK ENDS HERE

BODY REPAIR

NOTE

The van body repair is to be in accordance with standard vehicle body procedure.

TA231388

APPENDIX A

REFERENCES

A-1. PUBLICATION INDEXES AND GENERAL REFERENCES.

Index should be consulted frequently for latest changes, revisions, or references given in this appendix and for new publications relating to material covered in this publication.

a. Military Publication Indexes.

Consolidated Index of Army Publications and Blank Forms . . . . . DA PAM 310-1

A-2. FORMS.

Refer to DA PAM 25-30, Consolidated Index of Army Publications and Blank Forms, for a current and complete list of blank forms.

Refer to DA PAM 738-750, The Army Maintenance Management System (TAMMS), for instructions on the use of maintenance forms pertaining to the material.

A-3. OTHER PUBLICATIONS.

The following publications contain information pertinent to the major item material and associated equipment.

a. Camouflage.

Camouflage ..... FM 5-20
Color, Marking, and Camouflage Painting of Military Vehicles, Construction Equipment, and Materials Handling Equipment . . . . . TB 43-0209

b. Decontamination.

NBC Decontamination . . . . . FM 3-5

c. General.

Basic Cold Weather Manual . . . . . FM 31-70
Brake Fluid, Silicone (BFS) Conversion Procedures for Tank Automotive Equipment ..... TB 43-0002-87
Expendable/Durable Items (Except Medical, Class V, Repair Parts, and Heraldic items) . . . . . CTA 50-970
First Aid for Soldiers . . . . . FM 21-11
Manual for Wheeled Vehicle Driver ..... FM 21-305
Northern Operations . . . . . FM 31-71
Operation and Maintenance of Ordnance Material in Cold Weather (0° to -65°F). . . . . FM 9-207

A-3. OTHER PUBLICATIONS – CONTINUED

c. General – Continued

Procedures for Destruction of Tank-Automotive Equipment to Prevent Enemy Use	TM 750-244-6
The Army Maintenance Management System (TAMMS)	DA PAM 738-750

d. Maintenance and Repair.

Description, Use, Bonding Techniques, and Properties of Adhesives	TM ORD 1032
Inspection, Care, and Maintenance of Antifriction Bearings	TM 9-214
Materials Used for Cleaning, Preserving, Abrading, and Cementing Ordnance Materiel and Related Items Including Chemicals	TM 9-247
Operator's, Unit, Direct Support, and General Support Maintenance Manual for Care, Maintenance, and Repair and Inspection of Pneumatic Tires and Inner Tubes	TM 9-2610-200-14
Operator's Manual for Welding Theory and Application	TM 9-237

e. Administrative Storage.

Administrative Storage of Equipment	TM 740-90-1

f. Transportation.

Equipment Improvement Report and Maintenance Digest (U.S. Army Tank-Automotive Command) Tank-Automotive Equipment	TB 43-0001-39 Series

APPENDIX B

MAINTENANCE ALLOCATION CHART

Section I. INTRODUCTION

B-1. GENERAL.

a. This section provides a general explanation of all maintenance and repair functions authorized at various maintenance categories.

b. The Maintenance Allocation Chart (MAC) in section II designates overall authority and responsibility for the performance of maintenance functions on the identified end item or component. The application of the maintenance functions to the end item or component will be consistent with the capacities and capabilities of the designated maintenance categories.

c. Section III lists the tools and test equipment (both special tools and common tool sets) required for each maintenance function as referenced from section II.

d. Section IV contains supplemental instructions and explanatory notes for a particular maintenance function.

B-2. MAINTENANCE FUNCTIONS.

Maintenance functions will be limited to and defined as follows:

a. Inspect. To determine the serviceability of an item by comparing its physical, mechanical, and/or electrical characteristics with established standards through examination (e.g., by sight, sound, or touch).

b. Test. To verify serviceability by measuring the mechanical, pneumatic, hydraulic, or electrical characteristics of an item and comparing those characteristics with prescribed standards.

c. Service. Operations required periodically to keep an item in proper operating condition, i.e., to clean (includes decontaminate, when required), preserve, drain, paint, or replenish fuel, lubricants, or gases.

d. Adjust. To maintain or regulate, within prescribed limits, by bringing into proper or exact position or by setting the operating characteristics to specified parameters.

e. Aline. To adjust specified variable elements of an item to bring about optimum or desired performance.

f. Calibrate. To determine and cause corrections to be made or to be adjusted on instruments or test, measuring, and diagnostic equipment used in precision measurement. Consists of comparisons of two instruments, one of which is a certified standard of known accuracy, to detect and adjust any discrepancy in the accuracy of the instrument being compared.

g. Remove/Install. To remove and install the same item when required to perform service or other maintenance functions. Install may be the act of emplacing, seating, or fixing into position a spare, repair part, or module (component or assembly) in a manner to allow the proper functioning of a piece of equipment or system.

B-2. MAINTENANCE FUNCTIONS - CONTINUED

h. Replace. To remove an unserviceable item and install a serviceable counterpart in its place. Replace is authorized by the MAC and shown as the 3rd position code of the SMR code.

i. Repair. The application of maintenance services[1], including fault location/troubleshooting[2], removal/installation, and disassembly/assembly procedures[3] and maintenance actions[4] to identify troubles and restore serviceability to an item by correcting specific damage, fault, malfunction, or failure in a part, subassembly, module (component or assembly), end item, or system.

j. Overhaul. That maintenance effort (service or action) prescribed to restore an item to completely serviceable/operational condition as required by maintenance standards in appropriate technical publications (i.e., DMWR). Overhaul is normally the highest degree of maintenance performed by the Army. Overhaul does not normally return an item to like new condition.

k. Rebuild. Consists of those services/actions necessary for the restoration of unserviceable equipment to a like new condition, in accordance with original manufacturing standards. Rebuild is the highest degree of material maintenance applied to Army equipment. The rebuild operation includes the act of returning to zero those age measurements (hours/miles, etc.) considered in classifying Army equipment/components.

B-3. EXPLANATION OF COLUMNS IN THE MAC, SECTION II.

a. Column 1, Group Number. Column 1 lists functional group code numbers, the purpose of which is to identify maintenance significant components, assemblies, subassemblies, and modules with the next higher assembly. End item group number shall be “00”.

b. Column 2, Component/Assembly. Column 2 contains the names of components, assemblies, subassemblies, and modules for which maintenance is authorized.

c. Column 3, Maintenance Function. Column 3 lists the functions to be performed on the item listed in Column 2. (See paragraph B-2 for a detailed explanation of these functions.)

d. Column 4, Maintenance Category. Column 4 specifies, by the listing of a work time figure in the appropriate subcolumn(s), the category of maintenance authorized to perform the function listed in column 3. This figure represents the active time required to perform that maintenance function at the indicated category of maintenance. if the number or complexity of the tasks within the listed maintenance function vary at different maintenance categories, appropriate worktime figures will be shown for each category. The work time figure represents the average time required to restore an item (assembly, subassembly, components, module, end item, or system) to a serviceable condition under typical field operating conditions. This time includes preparation time (including any necessary disassembly/assembiy time), troubleshooting/fault location time, and quality assurance/quality control time, in addition to the time required to perform the specific tasks

[1]Services - inspect, test, service, adjust, aline, calibrate, and/or replace.
[2]Fault locate/troubleshoot - the process of investigating and detecting the cause of equipment malfunctioning; the act of isolating a fault within a system or unit under test (UUT).
[3]Disassembiy/assembly - encompasses the step-by-step taking apart (or breakdown) of a spare/functional group coded item to the level of its least componency identified as maintenance significant (i.e., assigned an SMR code) for the category of maintenance under consideration.
[4]Actions - welding, grinding, riveting, straightening, facing, remachinery, and/or resurfacing.

B-3. EXPLANATION OF COLUMNS IN THE MAC, SECTION II - CONTINUED.

identified for the maintenance functions authorized in the Maintenance Allocation Chart. The symbol designations for the various maintenance categories are as follows:

C - Operator or Crew
O - Organizational
F - Direct Support
H - General Support
D - Depot

e. Column 5, Tools and Equipment. Column 5 specifies, by code, those common tool sets (not individual tools) and special tools, TMDE, and support equipment required to perform the designated function.

f. Column 6, Remarks. This column shall, when applicable, contain a letter code, in alphabetical order, that shall be keyed to the remarks contained in section IV.

B-4. EXPLANATION OF COLUMNS IN TOOL AND TEST EQUIPMENT REQUIREMENTS, SECTION III.

a. Column 1, Reference code. The tools and test equipment reference code correlates with a code used in the MAC, section II, column 5.

b. Column 2, Maintenance Category. The lowest category of maintenance authorized to use the tool or test equipment.

c. Column 3, Nomenclature. Name or identification of the tool or test equipment.

d. Column 4, National Stock Number. The National Stock Number of the tool or test equipment.

e. Column 5, Tool Number. The manufacturer's part number.

B-5. EXPLANATION OF COLUMNS IN REMARKS, SECTION IV.

a. Column 1, Reference Code. The code recorded in column 6, section II.

b. Column 2, Remarks. This column lists information pertinent to the maintenance function being performed as indicated in the MAC, section II.

Section II. MAINTENANCE ALLOCATION CHART

(1) GROUP NUMBER	(2) COMPONENT/ ASSEMBLY	(3) MAINTENANCE FUNCTION	(4) MAINTENANCE CATEGORY C	O	F	H	D	(5) TOOLS AND EQPT	(6) REMARKS
06	ELECTRICAL SYSTEM							1,2, & 3	
0608	Miscellaneous Items								
	Wall Receptacles	Replace		2.0					
	Light Switches	Replace		1.0					
	Junction Boxes	Replace		2.0					
0609	Lights	Replace		0.2					
		Repair		0.2					A
0613	Chasis Wiring Harness								
	Wiring Harness, 24-Volt	Replace			4.0				
		Repair		1.0					B
	Wiring Harness, 110-volt	Replace			4.0				
		Repair		1.0					B
	Electrical Connectors	Cleaning	0.1						
	Connector Receptacles	Replace		1.0					
		Repair			1.0				
	Wire Connectors	Replace		0.2					
11	REAR AXLE							1, 2, 3, 4 , & 5	
1100	Rear Axle Assembly	Replace			5.0				
		Repair			3.0				C
	Subframe and Suspension Assembly	Replace			3.0				
12	BRAKES							1, 2, 3, 4 , & 5	
1202	Service Brakes	Adjust		0.5					

Section II. MAINTENANCE ALLOCATION CHART - CONTINUED

(1) GROUP NUMBER	(2) COMPONENT/ ASSEMBLY	(3) MAINTENANCE FUNCTION	(4) MAINTENANCE CATEGORY C	O	F	H	D	(5) TOOLS AND EQPT	(6) REMARKS
12	BRAKES - CONTINUED								
1202	Continued								
	Shoe Assembly	Replace		0.5					
		Repair			0.5				
	Backing Plate and Spider			0.5					
1204	Hydraulic Brake System								
	Cylinder, Master	Replace		0.2					
	Cylinder, Wheel	Replace		1.5					
	Tubes and Fittings, Hydraulic	Replace		0.1					
1208	Air Brake System								
	Chamber, Air	Replace		0.5					
		Repair			1.0				
	Lines and Fitting, Air	Replace		1.0					
		Repair		0.5					
	Couplings	Service	0.1						
		Replace		1.0					
		Repair		1.0					
	Air Reservoir	Service	0.1						
		Replace		1.5					
	Draincock	Replace		0.2					
	Filters, Air	Service		0.5					
		Replace		0.5					D
	Valve, Relay	Replace		1.0					

Section II. MAINTENANCE ALLOCATION CHART - CONTINUED

(1) GROUP NUMBER	(2) COMPONENT/ ASSEMBLY	(3) MAINTENANCE FUNCTION	(4) MAINTENANCE CATEGORY C	O	F	H	D	(5) TOOLS AND EQPT	(6) REMARKS
13	WHEELS							1,2,3, 4,&5	
1311	Wheel Assembly								
	Hub & Drum	Replace		2.0					
		Repair			1.5				
	Wheel	Replace		0.5					
1313	Tires and Tubes								
	Tires	Replace		0.5					
		Repair			1.5				
	Tubes	Replace		0.5					
		Repair		0.5					
15	FRAME AND TOWING ATTACHMENTS							1,2,3, 4,&5	
1501	Frame Assembly	Repair				8.0			E
	Bogie Bracket	Replace			2.0				
1503	Towing Attachments								
	King Pin	Replace				1.0			
1504	Spare Wheel Carrier	Replace		0.5					
		Repair		0.5					
1507	Landing Gear and Leveling Jacks								
	Landing Gear Leg and Bracket	Clean	0.2						
		Replace			3.0				
		Repair			3.0				
	Shoe, Vehicle Support	Replace		1.0					
	Handcrank	Replace		0.5					

Section II. MAINTENANCE ALLOCATION CHART - CONTINUED

(1) GROUP NUMBER	(2) COMPONENT/ ASSEMBLY	(3) MAINTENANCE FUNCTION	(4) MAINTENANCE CATEGORY C	O	F	H	D	(5) TOOLS AND EQPT	(6) REMARKS
16	SPRINGS							1,2,&3	
1601	Springs	Replace			4.0				
	Spring Brackets	Replace			2.0				
1605	Radius Rods	Replace			2.0				
18	BODY							1,2,&3	
1801	Body Assembly								
	Splash Guards	Replace		1.0					
	Doors	Replace Repair		1.0	 1.0				
1802	Windows and Glass with Mounting and Attaching Parts								
	Windows, Panels, Screens	Replace Repair		1.0 1.0					
1808	Stowage Racks, Boxes and Carrying Cases								
	Boxes, Stowage	Replace Repair		1.0 1.0					
1810	Cargo Body								
	Deck	Repair			3.0				
1812	Special Purpose Bodies								
	Body, Van	Repair			3.0				

Section II. MAINTENANCE ALLOCATION CHART - CONTINUED

(1) GROUP NUMBER	(2) COMPONENT/ ASSEMBLY	(3) MAINTENANCE FUNCTION	(4) MAINTENANCE CATEGORY					(5) TOOLS AND EQPT	(6) REMARKS
			C	O	F	H	D		
22	BODY AND CHASSIS ACCESSORY ITEMS							1,2,&3	
2202	Accessory Items								
	Reflectors	Replace		0.2					
	Mud Plates	Replace		0.2					
	Ladders	Replace		0.2					
2210	Data Plates	Replace		0.2					

Section III. TOOLS AND TEST EQUIPMENT REQUIREMENTS

TOOLS OR TEST EQUIPMENT REF CODE	MAINTENANCE CATEGORY	NOMENCLATURE	NATIONAL/NATO STOCK NUMBER	TOOL NUMBER
		COMMON TOOLS:		
1	O,F,H	Tool Kit, Mechanics Gen	5180-00-177-7033	
2	O,F,H	Shop Equipment, Common Set No. 1	4910-00-754-0654	
3	O,F,H	Shop Equipment, Supplemental Set No. 1	4910-00-754-0653	
4	F,H	Shop Equipment, Field Maint, Basic Set	4910-00-754-0705	
5	H	Shop Equipment, Wheeled Field Maint, Post, Camp and Station	4910-00-348-7696	
		SPECIAL TOOLS: None		

Section IV. REMARKS

REFERENCE CODE	REMARKS
A	Repair is limited to replacement of the lamps and the door assembly.
B	Repair is limited to replacement of connectors, terminals, circuit marker bands and repair by splicing.
C	Repair consists of cleaning up threads and deburring.
D	Replace may consist of replacement with air line splice.
E	Repair consists of welding only.

APPENDIX C

COMPONENTS OF END ITEM AND BASIC ISSUE ITEMS LISTS

Section I. INTRODUCTION

1. SCOPE.

This appendix lists components of end item and basic issue items for the semitrailer to help you inventory items required for safe and efficient operation.

C-2. GENERAL.

The Components of End Item and Basic Issue Items Lists are divided into the following sections:

a. Section II. Components of End Item. The listing is for informational purposes only, and is not authority to requisition replacements. These items are part of the end item, but are removed and separately packaged for transportation or shipment. As part of the end item, these items must be with the end item whenever it is issued or transferred between property accounts. Illustrations are furnished to assist you in identifying the items.

b. Section III. Basic Issue Items. These are the minimum essential items required to place the semitrailer in operation, to operate it, and to perform emergency repairs. Although shipped separately packaged, BII must be with the semitrailer during operation and whenever it is transferred between property accounts. The illustrations will assist you with hard-to-identify items. This manual is your authority to request/requisition replacement BII, based on TOE/MTOE authorization of the end item.

C-3. EXPLANATION OF COLUMNS.

The following provides an explanation of columns found in the tabular listings:

a. Column (1) - Illustration Number (Illus No.). This column indicates the number of the illustration in which the item is shown.

b. Column (2) - National Stock Number. Indicates the National stock number assigned to the item and will be used for requisitioning purposes.

c. Column (3) - Description. Indicates the Federal item name and, if required, a minimum description to identify and locate the item. The last line for each item indicates the FSCM (in parentheses) followed by the part number.

d. Column (4) - Usable on Code. Not applicable.

e. Column (5) - Unit of Measure (U/M). Indicates the measure used in performing the actual operational/maintenance function. This measure is expressed by a two-character alphabetical abbreviation (e.g., ea, in., pr.).

f. Column (6) - Quantity required (QTY REQ'D). Indicates the quantity of the item authorized to be used with/on the equipment.

Section II. COMPONENTS OF END ITEM LIST

(1) ILLUS No.	(2) NATIONAL STOCK NUMBER	(3) DESCRIPTION FSCM AND PART NUMBER	USABLE ON CODE	(4) U/M	(5) QTY REQ'D

NONE

Section III. BASIC ISSUE ITEMS

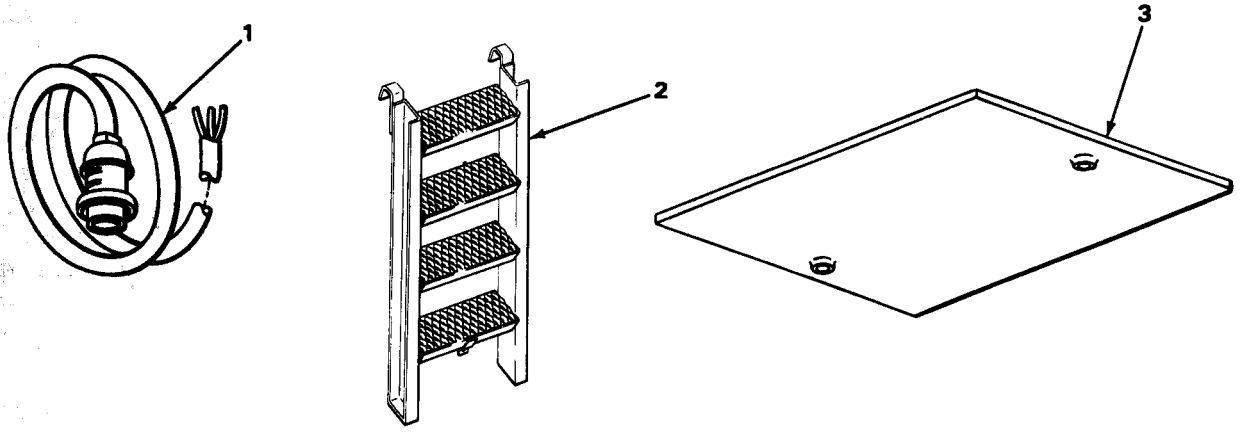

(1) ILLUS NO.	(2) NATIONAL STOCK NUMBER	(3) DESCRIPTION FSCM AND PART NUMBER	USABLE ON CODE	(4) U/M	(5) QTY REQ'D
1	2590-00-104-4572	Cable Assembly, Power, Electrical (19207) 7096967		ea	1
2	2540-00-974-3831	Ladder, Vehicle Boarding (19207) 7034270		ea	2
3	2590-00-974-3828	Shoe, Jack-Suppor (19207) 7034020		ea	2

TA231389

Section III. BASIC ISSUE ITEMS - CONTINUED

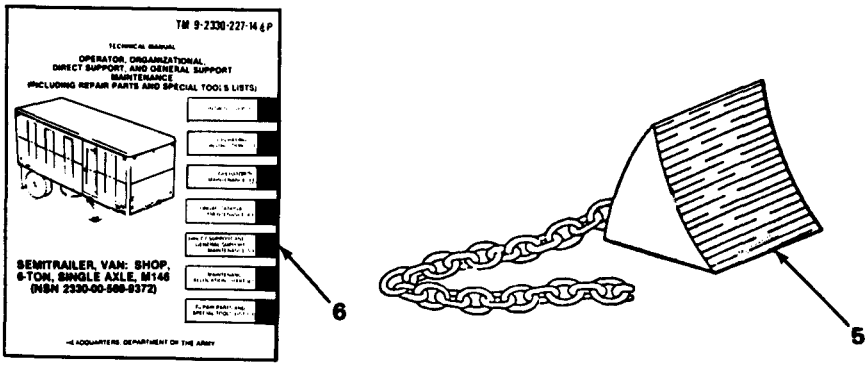

(1) ILLUS NO.	(2) NATIONAL STOCK NUMBER	(3) DESCRIPTION FSCM AND PART NUMBER	USABLE ON CODE	(4) U/M	(5) QTY REQ'D
4	Item Deleted				
5	2540-00-678-3469	Chock Block (96906) MS52127-3		ea	2
6		TM 9-2330-227-14&P		ea	1

TA510760

APPENDIX D

ADDITIONAL AUTHORIZATION LIST

Section I. INTRODUCTION

D-1. SCOPE

This appendix lists additional items that you are authorized for the support of the semitrailer.

D-2. GENERAL

This list identifies items that do not have to accompany the trailer and that do not have to be turned in with it. These items are all authorized to you by CTA, MTOE, TDA, or JTA.

D-3. EXPLANATION OF LISTING

National stock numbers, descriptions, and quantities are provided to help you identify and request the additional items you require to support this equipment. The items are listed in alphabetical sequence by item name under the type document (i.e., CTA, MTOE, TDA, or JTA) which authorized the item(s) to you.

Section II. ADDITIONAL AUTHORIZATION LIST

(1) NATIONAL STOCK NUMBER	(2) DESCRIPTION FSCM & PART NUMBER	USABLE ON CODE	(3) U/M	(4) QTY AUTH
	CTA AUTHORIZED ITEMS			
5340-00-912-4087	Padlock Set, Keyed Alike (96906) MS21313-161		ea	1

MTOE AUTHORIZED ITEMS
NONE

TDA AUTHORIZED ITEMS
NONE

JTA AUTHORIZED ITEMS
NONE

APPENDIX E

EXPENDABLE SUPPLIES AND MATERIALS LIST

Section I. INTRODUCTION

E-1. SCOPE.

This appendix lists expendable supplies and materials you will need to operate and maintain the semitrailer. These items are authorized to you by CTA 50-970, Expendable/Durable Items (Except Medical, Class V, Repair Parts, and Heraldic Items).

E-2. EXPLANATION OF COLUMNS.

a. Column (1) - Item number. This number is assigned to the entry in the listing and is referenced in the initial setup narrative instructions to identify the material.

b. Column (2) - Level. This column identifies the lowest level of maintenance that requires the listed item.

C - Operator/Crew
O - Organizational Maintenance
F - Direct Support Maintenance
H - General Support Maintenance

c. Column (3) - National Stock Number. This is the National Stock Number assigned to the item; use it to request or requisition the item.

d. Column (4) - Description. Indicates the Federal item name and, if required, a description to identify the item. The last line for each item indicates the Federal Supply Code for Manufacturer (FSCM) in parentheses followed by the part number.

e. Column (5) - Unit of Measure (U/M). Indicates the measure used in performing the actual maintenance function. This measure is expressed by a two-character alphabetical abbreviation (e.g., ea, in., pr). If the unit of measure differs from the unit of issue, requisition the lowest unit of issue that will satisfy your requirements.

SECTION II. EXPENDABLE SUPPLIES AND MATERIALS LIST

(1) ITEM NUMBER	(2) LEVEL	(3) NATIONAL STOCK NUMBER	(4) DESCRIPTION (FSCM)	(5) U/M
1	C	8040-00-273-8717	ADHESIVE MMM-A-121(81348) 1-PINT (0.473-LITER) CAN	
2		6810-00-205-6786	ALCOHOL, DENATURED (81348) O-E-00760 1-QUART (0.946-LITER) BOTTLE	QT
3	C	9150-01-059-2586 9150-01-102-9455	BRAKE FLUID, SILICONE, AUTO-MOTIVE MIL-B-4617 (METAL CONTAINER) (PLASTIC CONTAINER)	GAL
4	C	7920-00-514-2417	BRUSH, ACID SWABBING HB-643 (81348) BOX OF 144	EA
5	O	5350-00-221-0872	CLOTH, ABRASIVE (CROCUS) P-C-458 (81348) 50-SHEET PACKAGE	SH
6	O	5970-00-900-3046	COMPOUND, ELECTRICAL INSULATING MIL-C-47200 (81349) QT. 1-QUART (0.946-LITER) CAN	QT
7	O	6580-00-185-0423	COMPOUND, LEAK TEST MIL-L-25567 (81349) 1-GALLON (3.785-LITER) CAN	GAL
8			FLUX, ROSIN	
9	O	7930-00-282-9699	DETERGENT, GP, LIQ, WS, A MIL-D-16791 (81349) 1-GALLON (3.785-LITER) CAN	GAL
10	C	9150-00-190-0904	GREASE, AUTOMOTIVE AND ARTILLERY, GAA, MIL-G-10924 (81349), 1-POUND (0.454-KG) CAN	LB
11	C	9150-00-189-6727	OIL, LUBRICATING, OE/HDO 10 MIL-L-2104 (81349) 1-QUART (0.946-LITER) CAN	QT
12	C	9150-00-186-6681	OIL, LUBRICATING, OE/HDO 30 MIL-L-2104 (81349) 1-QUART (0.946-LITER) CAN	QT

SECTION II. EXPENDABLE SUPPLIES AND MATERIALS LIST - CONTINUED

(1) ITEM NUMBER	(2) LEVEL	(3) NATIONAL STOCK NUMBER	(4) DESCRIPTION (FSCM)	(5) U/M
13	C	9150-00-402-4478	OIL, LUBRICATING, OEA, MIL-L-46167 (81349) 1-QUART (0.946-LITER) CAN	QT
14	C	9150-00-231-2361	OIL, LUBRICATING, PRESERVATIVE PL-M, MIL-L-3150 (81348) 1-QUART (0.946-LITER) CAN	
15	C	9150-00-231-6689	OIL, LUBRICATING, PRESERVATIVE, PL-S VV-L-800 (81348) 1-QUART (0.946-LITER) CAN	QT
16	C	7920-00-205-1711	RAGS, WIPING, A-A-531 (58536) 50-POUND (22.7-KG) BALE	
17			SOLDER, NON-ACID	
18	C		SOLVENT, DRYCLEANING, TYPE II PD-680 (81348)	
		6850-00-664-5685	1-QUART (0.946-LITER) CAN	QT
		6850-00-281-1985	1-GALLON (3.785-LITER) CAN	GAL
		6850-00-285-8011	55-GALLON (208-LITER) DRUM	DR
19	O	9905-00-537-8954	TAG, MARKER MIL-T-12755 (81349) BOX OF 50	
20	O	8030-00-889-3534	TAPE, ANTISEIZING (TEFLON) MIL-T-27730 (81349) 1/4-INCH WIDE X 260-INCH LONG	FT
21	O	5970-00-184-2002	TAPE, ELECTRICAL INSULATION (81348) 1/32-INCH THICK, 2.00-INCHES WIDE	RL
22	O	PN020141	WIRE, SAFETY (99832)	RL

APPENDIX F

REPAIR PARTS AND SPECIAL TOOLS LISTS

Section I. INTRODUCTION

F-1. SCOPE.

This RPSTL lists and authorizes spares and repair parts; special tools; special test, measurement, and diagnostic equipment (TMDE); and other special support equipment required for performance of organizational, direct support, and general support maintenance of the Van Semitrailer. It authorizes the requisitioning, issue, and disposition of spares, repair parts and special tools as indicated by the source, maintenance and recoverability (SMR) codes.

F-2. GENERAL.

In addition to Section I, *Introduction,* this Repair Parts and Special Tools List is divided into the following sections:

a. Section II. Repair Parts List. A list of spares and repair parts authorized by this RPSTL for use in the performance of maintenance. The list also includes park which must be removed for replacement of the authorized parts. Parts lists are composed of functional groups in ascending alphanumeric sequence, with the parts in each group listed in ascending figure and item number sequence. Bulk materiels are listed in item name sequence. Repair parts kits are listed separately in their own functional group within Section II. Repair parts for reparable special tools are also listed in this section. items listed are shown on the associated illustration(s)/figure(s).

b. Section III. Special Tools List. A list of special tools, special TMDE, and other special support equipment authorized by this RPSTL [as indicated by Basis of issue (BOI) information in the *DESCRIPTION AND USABLE ON CODE* column] for the performance of maintenance.

c. Section IV. Cross-reference indexes. A list, in National item identification Number (NIIN) sequence, of all National stock numbered items appearing in the listing, followed by a list in alphanumeric sequence of all part numbers appearing in the listings. National stock numbers and part numbers are cross-referenced to each illustration/figure and item number appearance. The figure and item number index lists figure and item numbers in alphanumeric sequence and cross-references NSN, CAGE, and part numbers.

F-3. EXPLANATION OF COLUMNS (SECTIONS II AND III).

a. ITEM NO. [Column (1)]. indicates the number used to identify items caiied out in the illustration.

b. SMR CODE [Column (2)]. The Source, Maintenance, and Recoverability (SMR) code is a 5-position code containing supply/requisitioning information, maintenance category authorization criteria, and disposition instruction, as shown in the following breakout:

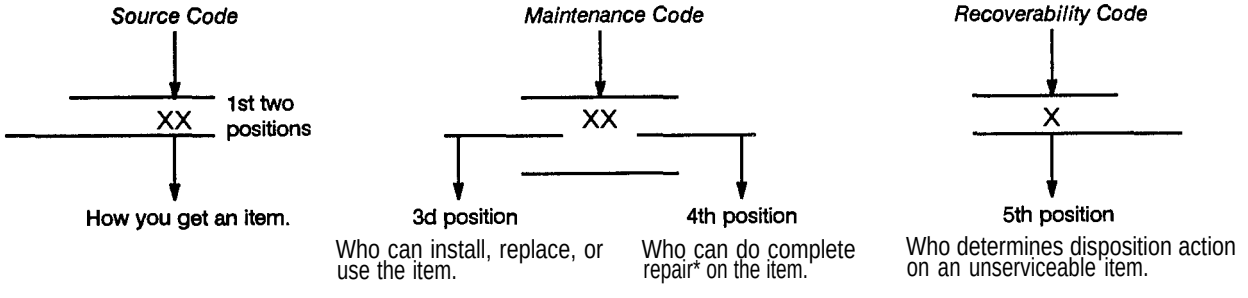

*Complete Repair: Maintenance capacity, capability, and authority to perform all corrective maintenance tasks of the *"Repair"* function in a use/user environment in order to restore serivceability to a failed item.

F-3. EXPLANATION OF COLUMNS (SECTIONS II AND III) – CONTINUED.

(1) Source Code. The source code tells you how to get an item needed for maintenance, repair, or overhaul of an end item/equipment. Explanations of source codes follow:

Code	*Application/Explanation*
PA PB PC** PD PE PF PG	Stocked items; use the applicable NSN to request/requisition items with these source codes. They are authorized to the category indicated by the code entered in the 3d position of the SMR code. *** Items coded PC are subject to deterioration.*
KD KF KB	Items with these codes are not to be requested/requisitioned individually. They are part of a kit which is authorized to the maintenance category indicated in the 3d position of the SMR code. The complete kit must be requisitioned and applied.
MO – Made at UM/AVUM Level *MF – Made at DS/AVUM Level* *MH – Made at GS Level* *MD – Made at Depot*	Items with these codes are not to be requested/requisitioned individually. They must be made from bulk materiel which is identified by the part number in the *DESCRIPTION AND USABLE ON CODE (UOC)* column and listed in the bulk materiel group of the repair parts list in this RPSTL. If the item is authorized to you by the 3d position code of the SMR code, but the source code indicates it is made at a higher level, order the item from the higher level of maintenance.
AO – Assembled by UM/AVUM Level *AF – Assembled by DS/AVUM Level* *AH – Assembled by GS Level* *AD – Assembled at Depot*	Items with these codes are not to be requested/requisitioned individually. The parts that make up the assembled item must be requisitioned or fabricated and assembled at the level of maintenance indicted by the source code. If the 3d position code of the SMR code authorizes you to replace the item, but the source code indicates that the item is assembled at a higher level, order the item from the higher level of maintenance.

NOTE

Cannibalization or controlled exchange, when authorized, may be used as a source of supply for items with the following source codes, except for those source coded "XA."

XA – DO NOT requisition an "XA"-coded item. Order its next higher assembly.

XB – If an "XB" item is not available from salvage, order it using the CAGE and part number given.

F-3. EXPLANATION OF COLUMNS (SECTIONS II AND III) - CONTINUED.

XC - Installation drawing, diagram, instruction sheet, field service drawing, that is identified by manufacturer's part number.

XD - Item is not stocked. Order an "XD'' -coded item through normal supply channels using the CAGE and part number given, if no NSN is available.

(2) Maintenance Code. Maintenance codes tell you the level(s) of maintenance authorized to use and repair support items. The maintenance codes are entered in the third and fourth positions of the SMR code as follows:

(a) The maintenance code entered in the third position tells you the lowest maintenance level authorized to remove, replace, and use an item. The maintenance code entered in the third position will indicate authorization to one of the following levels of maintenance.

Code	*Application/Explanation*
C	- Crew or operator maintenance done within unit maintenance or aviation unit maintenance.
O	- Unit maintenance or aviation unit can remove, replace, and use the item.
F	- Direct support or aviation intermediate level can remove, replace, and use the item.
H	- General support Ievel can remove, replace, and use the item.
L	- Specialized repair activity can remove, replace, and use the item.
D	- Depot level can remove, replace, and use the item.

NOTE

Some limited repair may be done on the item at a lower level of maintenance, if authorized by the Maintenance Allocation Chart (MAC) and SMR codes.

(b) The maintenance code entered in the fourth position tells whether or not the item is to be repaired and identifies the lowest maintenance level with the capability to do complete repair (i.e., perform all authorized *"Repair"* functions). This position will contain one of the following maintenance codes:

Code	*Application/Explanation*
O	- Unit maintenance or aviation unit is the lowest level that can do complete repair of the item.
F	- Direct support or aviation intermediate is the lowest level than can do complete repair of the item.
H	- General support is the lowest level that can do complete repair of the item.
L	- Specialized repair activity is the lowest level that can do complete repair of the item.
D	- Depot is the lowest Ievel that can do complete repair of the item.
Z	- Nonreparable. No repair is authorized.
B	- No repair is authorized. (No parts or special tools are authorized for the maintenance of a "B'' -coded item.) However, the item may be reconditioned by adjusting, lubricating, etc., at the user level.

F-3. EXPLANATION OF COLUMNS (SECTIONS II AND III) – CONTINUED.

(3) Recoverability Code. Recoverability codes are assigned to items to indicate the disposition action on unserviceable items. The recoverability code is entered in the fifth position of the SMR code as follows:

Code	*Application/Explanation*
Z	– Nonreparable item. When unserviceable, condemn and dispose of the item at the level of maintenance shown in the 3d position of the SMR code.
O	– Reparable item. When uneconomically reparable, condemn and dispose of the item at unit maintenance or aviation unit level.
F	– Reparable item. When uneconomically reparable, condemn and dispose of the item at the direct support or aviation intermediate level.
H	– Reparable item. When uneconomically reparable, condemn and dispose of the item at the general support level.
D	– Reparable item. When beyond lower level repair capability, return to depot. Condemnation and disposal of item not authorized below depot level.
L	– Reparable item. Condemnation and disposal of item not authorized below specialized repair activity (SRA).
A	– Item requires special handling or condemnation procedures because of specific reasons (e.g., precious metal content, high dollar value, critical material, or hazardous material). Refer to appropriate manuals/directives for specific instructions.

c. CAGEC [Column (3)]. The Commercial and Government Entity (CAGE) Code (C) is a 5-digit alphanumeric code which is used to identify the manufacturer, distributor, or Government agency, etc., that supplies the item.

NOTE

When you use an NSN to requisition an item, the item you receive may have a different part number from the part ordered.

d. PART NUMBER [Column (4)]. Indicates the primary number used by the manufacturer (individual, company, firm, corporation, or Government activity), which controls the design and characteristics of the item by means of its engineering drawings, specifications standards, and inspection requirements to identify an item or range of items.

e. DESCRIPTION AND USABLE ON CODE (UOC) [Column (5)]. This column includes the following information:

(1) The Federal item name and, when required, a minimum description to identify the item.

(2) Physical security classification. Not Applicable.

(3) Items that are included in kits and sets are listed below the name of the kit or set on Figure KIT.

(4) Spare/repair parts that make up an assembled item are listed immediately following the assembled item line entry.

(5) Part numbers for bulk materiels are referenced in this column in the line item entry for the item to be manufactured/fabricated.

(6) When the item is not used with all serial numbers of the same model, the effective serial numbers are shown on the last line(s) of the description (before UOC).

(7) The usable on code, when applicable (see paragraph F-5, Special Information).

F-3. EXPLANATION OF COLUMNS (SECTIONS II AND III) - CONTINUED.

(8) In the Special Tools List section, the Basis of Issue (BOI) appears as the last line(s) in the entry for each special tool, special TMDE, and other special support equipment. When density of equipments supported exceeds density spread indicated in the Basis of Issue, the total authorization is increased proportionately.

(9) The statement "END OF FIGURE" appears just below the last item description in Column 5 for a given figure in both Section II and Section III.

f. QTY [Column (6)]. The *QTY* (quantity per figure) column indicates the quantity of the item used in the breakout shown on the illustration/figure, which is prepared for a functional group, subfunctional group, or an assembly. A “V” appearing in this column in lieu of a quantity indicates that the quantity is variable and the quantity may vary from application to application.

F-4. EXPLANATION OF COLUMNS (SECTION IV).

a. National Stock Number (NSN) Index.

(1) STOCK NUMBER **column.** This column lists the NSN by National Item Identification Number (NIIN) sequence. The NIIN consists of the last nine digits of the NSN (i.e., 5305-01-674-1467). (NSN: 5305-01-674-1467; NIIN: 01-674-1467). When using this column to locate an item, ignore the first 4 digits of the NSN. However, the complete NSN should be used when ordering items by stock number.

(2) FIG. column. This column lists the number of the figure where the item is identified/located. The figures are in numerical order in Section II and Section Ill.

(3) ITEM column. The item number identifies the item associated with the figure listed in the adjacent FIG. column. This item is also identified by the NSN listed on the same line.

b. Part Number Index. Part numbers in this index are listed by part number in ascending alphanumeric sequence (i.e., vertical arrangement of letter and number combination which places the first letter or digit of each group in order A through Z, followed by the numbers 0 through 9 and each following letter or digit in like order).

(1) CAGEC column. The Commercial and Government Entity (CAGE) Code(C) is a 5-digit alphanumeric code used to identify the manufacturer, distributor, or Government agency, etc., that supplies the item.

(2) PART NUMBER column. Indicates the primary number used by the manufacturer (individual, firm, corporation, or Government activity), which controls the design and characteristics of the item by means of its engineering drawings, specifications standards and inspection requirements to identify an item or range of items.

(3) STOCK NUMBER column. This column lists the NSN for the associated part number and manufacturer identified in the PART NUMBER and CAGE columns to the left.

(4) FIG. column. This column lists the number of the figure where the item is identified/located in Section II and Section Ill.

(5) ITEM column. The item number is that number assigned to the item as it appears in the figure referenced in the adjacent figure number column.

c. Figure and Item Number Index.

(1) FIG. column. This column lists the number of the figure where the item is identified/located in Sections II and Ill.

(2) ITEM column. The item number is that number assigned to the item as it appears in the figure referenced in the adjacent figure number column.

(3) STOCK NUMBER column. This column lists the NSN for the item.

F-4. SPECIAL INFORMATION – CONTINUED.

(4) *CAGE* column. The Commercial and Government Entity (CAGE) is a 5-digit alphanumeric code used to identify the manufacturer, distributor, or Government agency, etc., that supplies the item.

(5) *PART NUMBER* column. Indicates the primary number used by the manufacturer (individual, firm, corporation, or Government activity), which controls the design and characteristics of the item by means of its engineering drawings, specifications standards and inspection requirements to identify an item or range of items.

F-5. SPECIAL INFORMATION.

a. Usable On Code. The usable on code appears in the lower left corner of the Description column heading. Usable on codes are shown as "UOC: . . . . . " in the Description column (justified left) on the first line applicable item description/nomenclature. Uncoded items are applicable to all models. Identification of the usable on codes used in this RPSTL are:

Code	*Used On*
868	M146
870	M146F

b. Fabrication Instructions. Bulk materiels required to manufacture items are listed in the Bulk Materiel Functional Group of this RPSTL. Part numbers for bulk materiels are also referenced in the DESCRIPTION column of the line item entry for the item to be manufactured/fabricated. Detailed fabrication instructions for items source coded to be manufactured or fabricated are found in *Appendix G* of this manual.

c. Assembly Instructions. Detailed assembly instructions for items source coded to be assembled from component spare/repair parts are found in *Chapters 4* and *5*. Items that make up the assembly are listed immediately following the assembly item entry or reference is made to an applicable figure.

d. Kits. Line item entries for repair parts kits appear in group 9401 in Section II.

e. Index Numbers. Items which have the word BULK in the FIG. column will have an index number shown in the item column. This index number is a cross-reference between the National Stock Number/Part Number Index and the bulk materiel list in Section II.

F-6. HOW TO LOCATE REPAIR PARTS.

a. When National Stock Number or Part Number is Not Known:

(1) First. Using the Table of Contents, determine the assembly group or subassembly group to which the item belongs. This is necessary since figures are prepared for assembly groups and subassembly groups, and listings are divided into the same groups.

(2) Second. Find the figure covering the assembly group or subassembly group to which the item belongs.

(3) Third. Identify the item on the figure and use the Figure and Item Number Index to find the NSN.

b. When National Stock Number or Part Number is Known:

(1) First. Using the National Stock Number or Part Number Index, find the pertinent National Stock Number or Part Number. The NSN Index is in National Item Identification Number (NIIN) sequence [see paragraph F-4.a(1)]. The part numbers in the Part Number Index are listed in ascending alphanumeric sequence (see paragraph F-4.b). Both indexes cross-reference you to the illustration/figure and item number of the item you are looking for.

(2) Second. Turn to the figure and item number, verify that the item is the one you're looking for, then locate the item number in the repair parts list for the figure.

F-7. ABBREVIATIONS.

For standard abbreviations see MIL-STD-12D, *Military Standard Abbreviations for Use on Drawings, Specifications, Standards, and in Technical Documents.*

Abbreviations	*Explanation*
NIIN	National Item Identification Number (consists of the last 9 digits of the NSN)
RPSTL	Repair Parts and Special Tools Lists

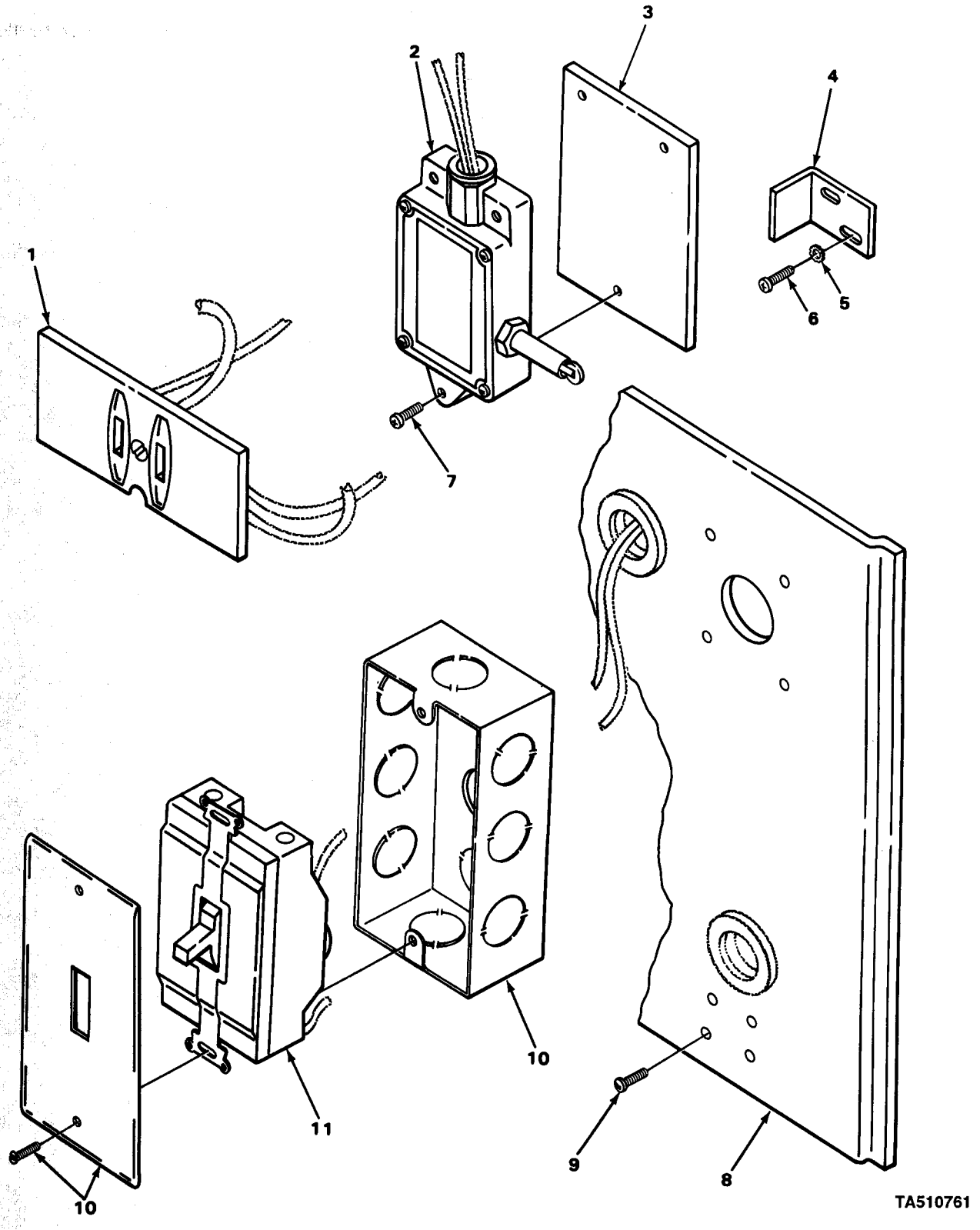

FIGURE 1. LIGHT SWITCHES.

(1) ITEM NO	(2) SMR CODE	(3) CAGEC	(4) PART NUMBER	(5) DESCRIPTION AND USABLE ON CODES (UOC)	(6) QTY
				GROUP 06 ELECTRICAL SYSTEM	
				GROUP 0608 MISCELLANEOUS ITEMS	
				FIG. 1 LIGHT SWITCHES	
1	XBOZZ	19207	7038789	CONNECTOR,RECEPTACL UOC:868	20
2	PFOZZ	18876	10004823	SWITCH,SENSITIVE UOC:868	2
3	XDOZZ	19207	10919693	PLATE UOC:868	2
4	XBOZZ	19207	10919609	BRACKET UOC:868	2
5	PAOZZ	96906	MS35335-32	WASHER,LOCK UOC:868	4
6	XDOZZ	96906	MS24618-41	SCREW,TAPPING,THREA UOC:868	4
7	XDOZZ	96906	MS24621-61	SCREW,TAPPING,THREA UOC:868	5
8	XDOZZ	19207	7002825	PLATE UOC:868	1
9	PAOZZ	96906	MS51861-45C	SCREW,TAPPING,THREA UOC:868	12
10	XBOZZ	19207	10919678	BOX UOC:868	4
11	PAOZZ	19207	7096964	SWITCH,TOGGLE UOC:868	4
				END OF FIGURE	

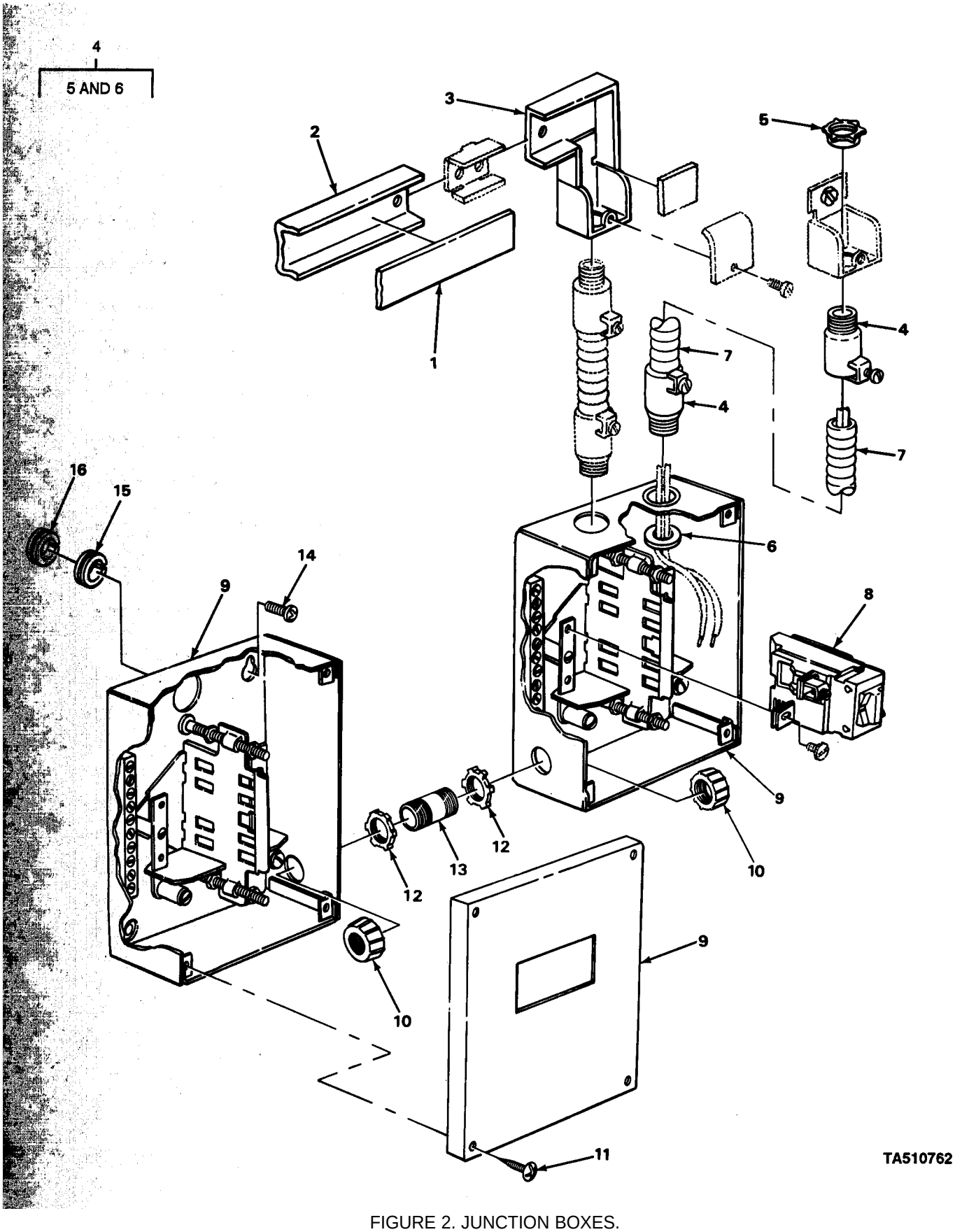

FIGURE 2. JUNCTION BOXES.

(1) ITEM NO	(2) SMR CODE	(3) CAGEC	(4) PART NUMBER	(5) DESCRIPTION AND USABLE ON CODES (UOC)	(6) QTY
				GROUP 0608 MISCELLANEOUS ITEMS	
				FIG. 2 JUNCTION BOXES	
1	PBOZZ	19207	7264293-2	COVER,CONDUIT,RACEW	1
2	PFOZZ	19207	7264292-2	RACEWAY,METALLIC	1
3	XDOZZ	19207	8713240	ELBOW	2
4	XDOOO	19207	7096965	COUPLING	4
5	XDOZZ	19207	503056	.NUT	4
6	PAOZZ	96906	MS27183-23	.WASHER,FLAT	8
7	MOOZZ	19207	10926021-1	CONDUIT MAKE FROM CONDUIT P/N 10926021	2
8	PAOZZ	19207	7044043	CIRCUIT BREAKER	2
8	PAOZZ	52737	P120	CIRCUIT BREAKER	4
9	PFOZZ	19207	7044041	BOX CONNECTOR,ELECT	2
10	PAOZZ	79466	50810	BUSHING,ELECTRICAL	2
11	PAOZZ	96906	MS51861-69	SCREW,TAPPING,THREA	8
12	XDOZZ	19207	501705	BUSHING	2
13	PFOZZ	96906	MS51953-101	NIPPLE,PIPE	1
14	PAOZZ	96906	MS35493-17	SCREW,WOOD	8
15	PAOZZ	88044	AN931-12-17	GROMMET,NONMETALLIC	2
16	PFOZZ	96906	MS35489-66	GROMMET,NONMETALLIC	2
				END OF FIGURE	

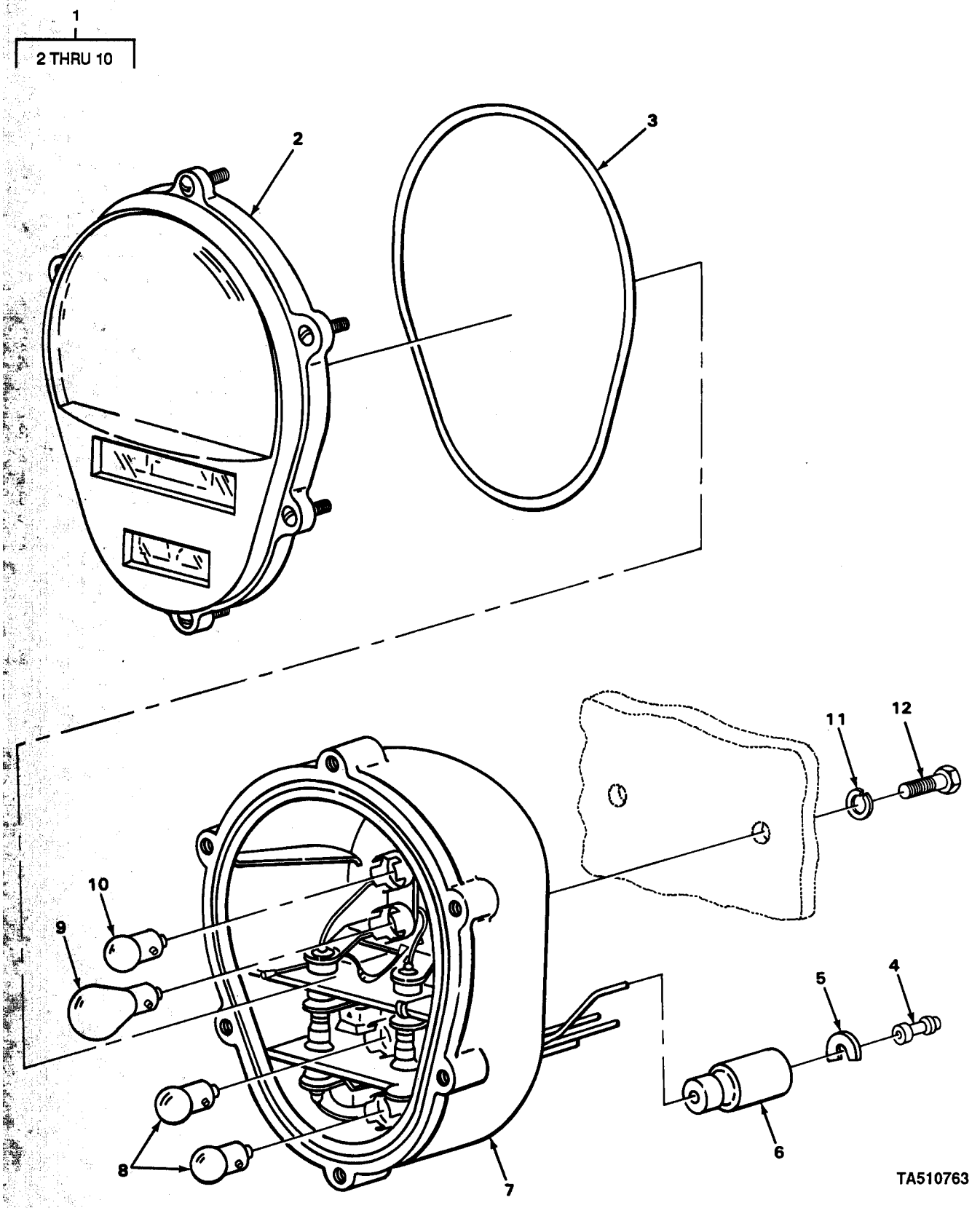

FIGURE 3. COMPOSITE LIGHT.

(1) ITEM NO	(2) SMR CODE	(3) CAGEC	(4) PART NUMBER	(5) DESCRIPTION AND USABLE ON CODES (UOC)	(6) QTY
				GROUP 0609 LIGHTS	
				FIG. 3 COMPOSITE LIGHT	
1	PAOOO	96906	MS52125-2	STOP LIGHT-TAILLIGH	2
2	PAOZZ	19207	11639535	.LENS,LIGHT	1
3	PAOZZ	19207	11639519-2	.PACKING,PREFORMED	1
4	PAOZZ	96906	MS27148-2	.CONTACT,ELECTRICAL	4
5	PAOZZ	19207	8338567	.WASHER,SLOTTED	4
6	PAOZZ	19207	8338566	.SHELL,ELECTRICAL CO	4
7	XAOZZ	19207	11639520	.BODY ASSEMBLY	1
8	PAOZZ	96906	MS15570-1251	.LAMP,INCANDESCENT	2
9	PAOZZ	96906	MS35478-1683	.LAMP,INCANDESCENT	1
10	PAOZZ	96906	MS15570-623	.LAMP,INCANDESCENT	1
11	PAOZZ	16764	110730	WASHER,LOCK	4
12	PAOZZ	96906	MS18154-58	SCREW,CAP,HEXAGON H	4
				END OF FIGURE	

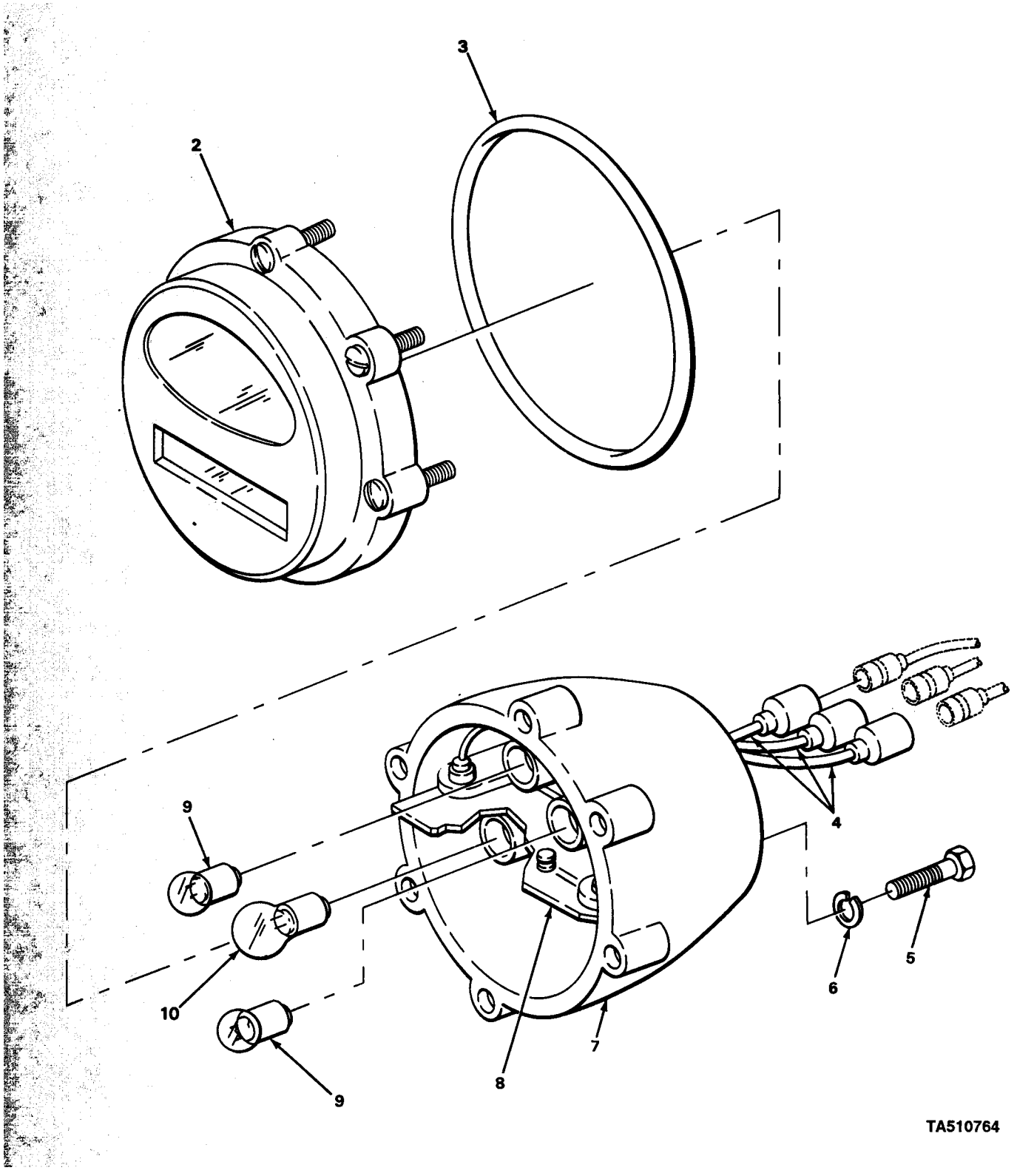

FIGURE 4. STOPLIGHT.

(1) ITEM NO	(2) SMR CODE	(3) CAGEC	(4) PART NUMBER	(5) DESCRIPTION AND USABLE ON CODES (UOC)	(6) QTY
				GROUP 0609 LIGHTS	
				FIG. 4 STOPLIGHT	
1	XDOOO	19207	9727644	STOP LIGHT-TAILLIGH	2
2	PAOZZ	19207	7526020	.RETAINER,LENS	1
3	PAOZZ	19207	7320658	.PACKING,PREFORMED	1
4	PAOZZ	19207	8338566	.SHELL,ELECTRICAL CO	3
5	PFOZZ	96906	MS18154-58	.SCREW,CAP,HEXAGON H	2
6	PAOZZ	96906	MS35333-42	.WASHER,LOCK	2
7	XAOZZ	96906	MS53047-1	.LIGHT,PARKING	1
8	XAOZZ	19207	8378661	.WIRING HARNESS	1
9	PAOZZ	96906	MS15570-1251	.LAMP,INCANDESCENT	2
10	PAOZZ	96906	MS35478-1683	.LAMP,INCANDESCENT	1
				END OF FIGURE	

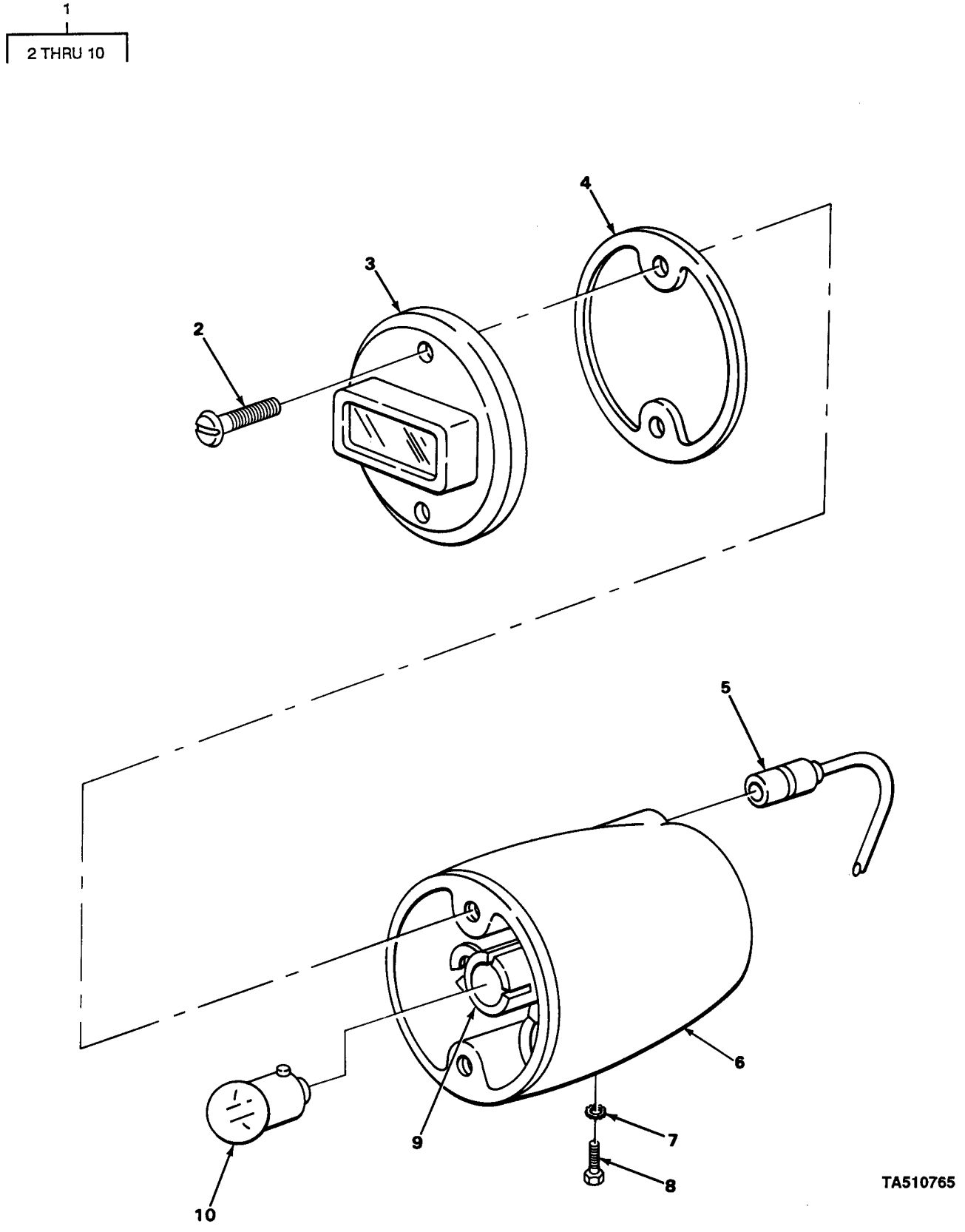

FIGURE 5. BLACKOUT LIGHT

(1) ITEM NO	(2) SMR CODE	(3) CAGEC	(4) PART NUMBER	(5) DESCRIPTION AND USABLE ON CODES (UOC)	(6) QTY
				GROUP 0609 LIGHTS	
				FIG. 5 BLACKOUT LIGHT	
1	PAOOO	96906	MS51302-1	STOP LIGHT, VEHICULA	1
2	PAOZZ	96906	MS51959-46	.SCREW MACHINE	2
3	PAOZZ	19207	8741646	.RETAINER,LENS	1
4	PFOZZ	73331	5942528	.GASKET	1
5	PAOZZ	19207	8386477	.TERMINAL,FEEDTHRU	1
6	XAOZZ	19207	8741650	.HOUSING,LIGHT	1
7	PAOZZ	96906	MS35335-34	.WASHER,LOCK	1
8	PAOZZ	96906	MS90727-32	.BOLT,MACHINE	1
9	XAOZZ	19207	8741651	.LAMPHOLDER	1
10	PAOZZ	96906	MS15570-1251	.LAMP,INCANDESCENT	1
				END OF FIGURE	

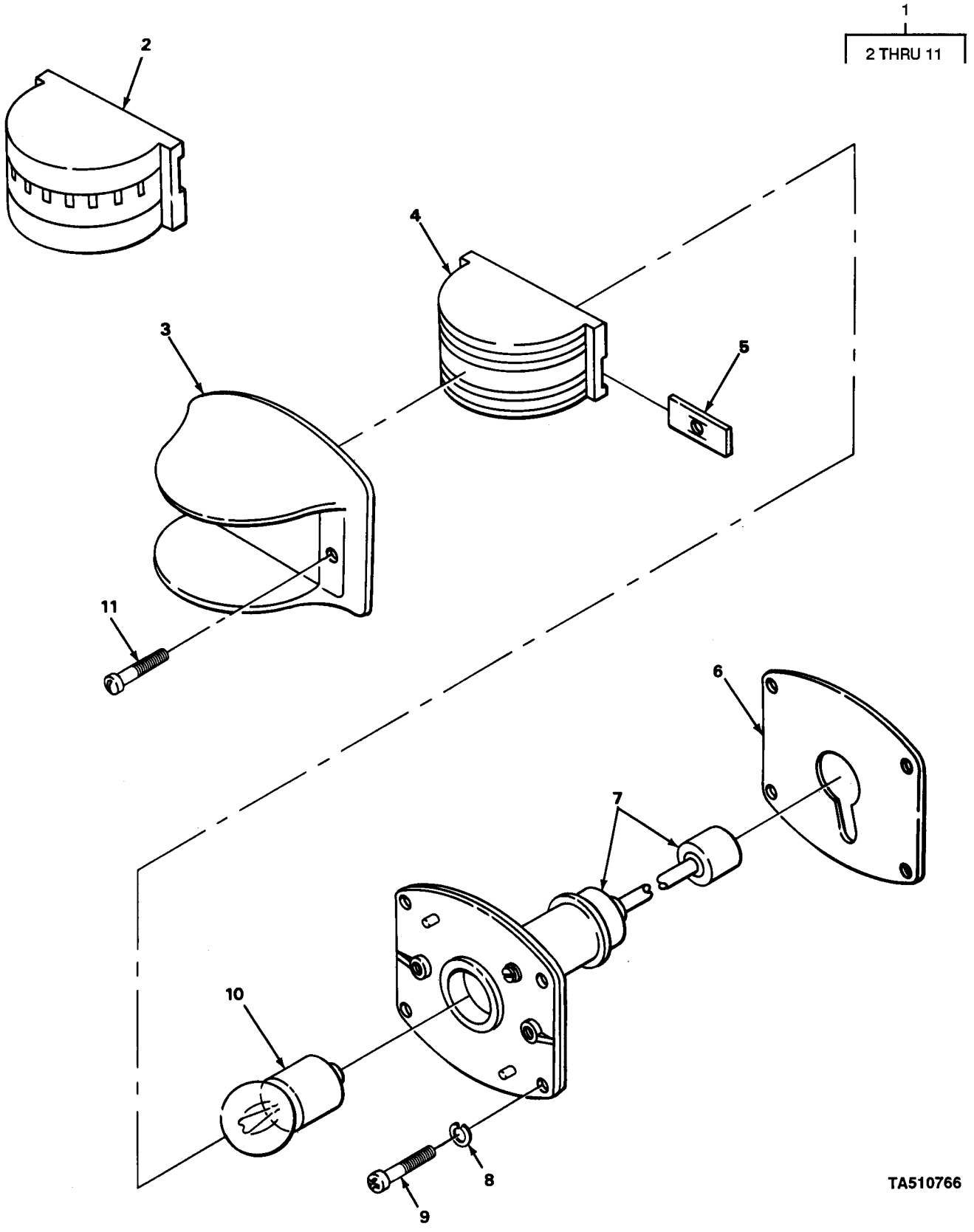

FIGURE 6. CLEARANCE MARKER LIGHT

(1) ITEM NO	(2) SMR CODE	(3) CAGEC	(4) PART NUMBER	(5) DESCRIPTION AND USABLE ON CODES (UOC)	(6) QTY
				GROUP 0609 LIGHTS	
				FIG. 6 CLEARANCE MARKER LIGHT	
1	PAOOO	96906	MS35423-1	LIGHT,MARKER,CLEARA	4
1	PAOOO	96906	MS35424-1	LIGHT,MARKER,CLEARA	2
1	PAOOO	96906	MS35424-2	LIGHT,MARKER,CLEARA	2
1	PAOOO	96906	MS35423-2	LIGHT,MARKER,CLEARA	7
2	PAOZZ	96906	MS35420-1	.LENS BLACKCUT,PLASTIC,REC W/ FILTER(REAR)	1
2	PAOZZ	96906	MS35420-2	.LENS,LIGHT (USE WITH P/N MS35424-2) WITH FILTER	1
3	PAOZZ	96906	MS35422-1	.LIGHT,MARKER,CLEARA	1
4	PAOZZ	96906	MS35421-2	.LENS,LIGHT (USE WITH P/N MS34523-2) NO FILTER	1
4	PAOZZ	96906	MS35421-1	.LENS,LIGHT (USE WITH P/N MS35423-1) NO FILTER	1
5	PAOZZ	19207	7526796	.PUSH ON NUT LENS RETAINING	2
6	PAOZZ	19207	7526509	.FELT,MECHANICAL,PRE	1
7	PAOZZ	19207	7526515	.PLATE,MOUNTING,LAMP	1
8	PAOZZ	96906	MS35338-43	.WASHER,LOCK	2
9	PAOZZ	96906	MS35206-267	.SCREW,MACHINE	60
10	PAOZZ	96906	MS15570-1251	.LAMP,INCANDESCENT	1
11	PAOZZ	96906	MS51959-61	.SCREW,MACHINE BODY ATTACHING	2
				END OF FIGURE	

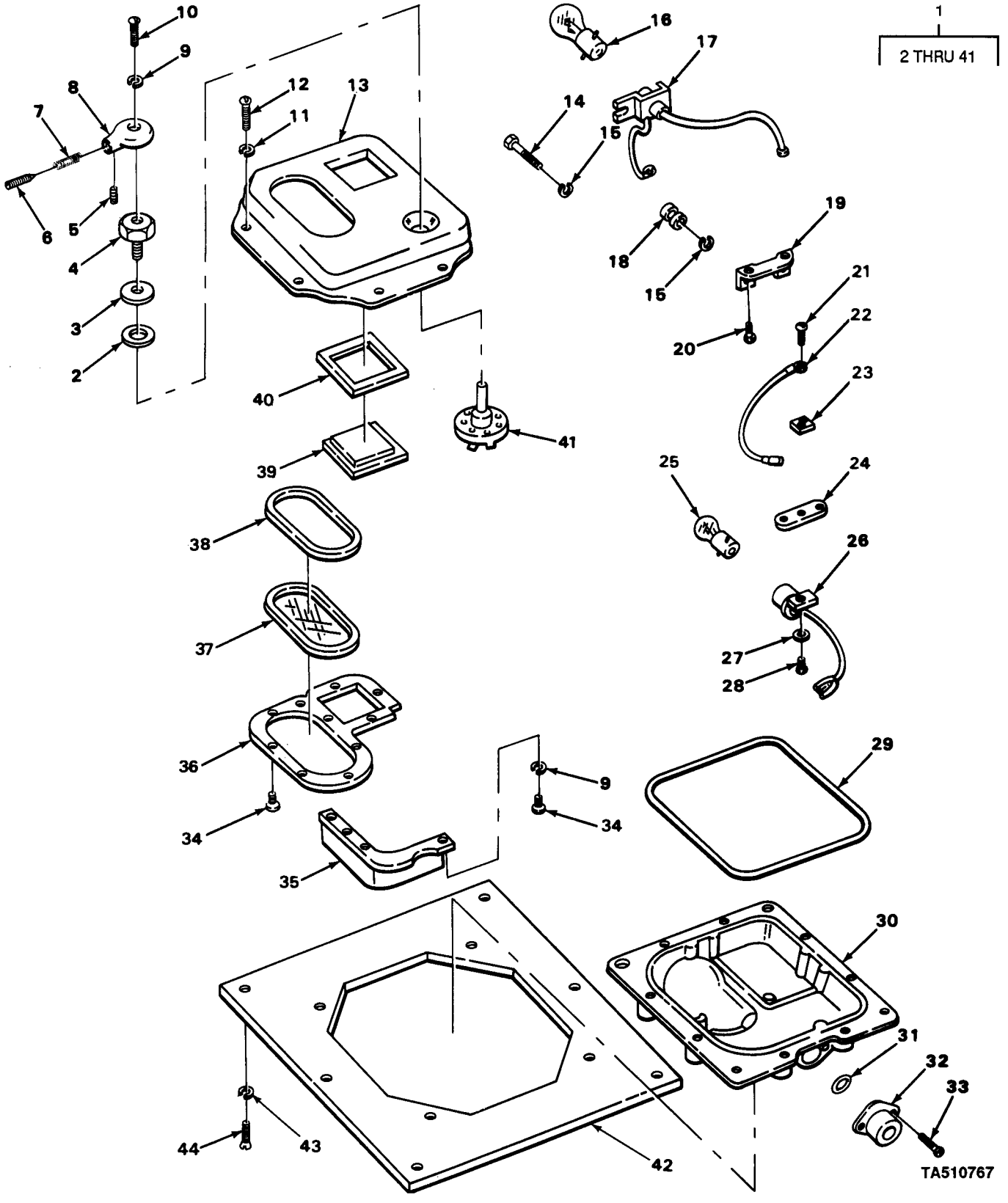

FIGURE 7. DOMELIGHT, 24-VOLT.

(1) ITEM NO	(2) SMR CODE	(3) CAGEC	(4) PART NUMBER	(5) DESCRIPTION AND USABLE ON CODES (UOC)	(6) QTY
				GROUP 0609 LIGHTS	
				FIG. 7 DOMELIGHT, 24-VOLT	
1	PAOOO	96906	MS51073-1	LIGHT,DOME	4
2	PAOZZ	19207	7320655	.GASKET	1
3	PAOZZ	19207	7320654	.WASHER,FLAT	1
4	PAOZZ	16528	7320652	.MOUNTING NUT ASSEMB	1
5	PAOZZ	19207	7320657	.SETSCREW	1
6	PAOZZ	56161	10511509	.PUSH BUTTON	1
7	PAOZZ	19207	7057189	.SPRING,HELICAL,COMP	1
8	PAOZZ	73331	5936185	.KNOB	1
9	PFOZZ	77926	A02157-103	.WASHER,LOCK	12
10	PAOZZ	96906	MS35206-229	.SCREW,MACHINE	1
11	PAOZZ	19207	7320642	.CLIP,RETAINING	8
12	PAOZZ	19207	7320641	.SCREW,MACHINE	8
13	PFOZZ	19207	7962241	.RETAINER,LENS	1
14	PFOZZ	19207	8335233	.SCREW,SHOULDER	2
15	PFOZZ	96906	MS35338-42	.WASHER,LOCK	2
16	PAOZZ	96906	MS35478-1691	.LAMP,INCANDESCENT	1
17	PFOZZ	19207	7064962	.LAMPHOLDER	1
18	PFOZZ	24617	5942525	.GROMMET,NONMETALLIC	2
19	PFOZZ	19207	7064896	.PLATE,MOUNTING,LAMP	1
20	PFOZZ	96906	MS35206-242	.SCREW,MACHINE	2
21	PAOZZ	96906	MS35206-228	.SCREW,MACHINE	1
22	PFOZZ	19207	7064899	.LEAD,ELECTRICAL	1
23	PFOZZ	19207	8335240	.GASKET	1
24	PFOZZ	19207	8335242	.PLATE,MOUNTING,LAMP	1
25	PAOZZ	96906	MS15570-623	.LAMP,INCANDESCENT	1
26	XAOZZ	19207	10942115	.LAMPHOLDER	1
27	PAOZZ	19207	8744897	.WASHER,FLAT	2
28	XAOZZ	19207	7320684	.SCREW,MACHINE	2
29	PAOZZ	19207	7962254	.SEAL,NONMETALLIC RO	1
30	PFOZZ	19207	8744898	.BODY,DOME LIGHT	1
31	PAOZZ	19207	7962251	.PACKING,PREFORMED	1
32	PAOZZ	19207	7064961	.CONNECTOR,RECEPTACL	1
33	PAOZZ	96906	MS35206-241	.SCREW,MACHINE	2
34	PAOZZ	96906	MS35206-226	.SCREW,MACHINE	11
35	PFOZZ	19207	7962247	.PARTITION	1
36	PFOZZ	19207	7962246	.PLATE RETAINING WIN	1
37	PAOZZ	19207	7962244	.LENS, DOMELIGHT	1
38	PAOZZ	19207	7962243	.GASKET	1
39	PFOZZ	19207	12314082	.LENS,LIGHT BLUE	1
40	PAOZZ	19207	7962242	.SEAL,NONMETALLIC ST	1
41	PAOZZ	19207	7320651	.SWITCH ROTARY	1
42	XDOZZ	19207	7034242	PLATE	4
43	PAOZZ	96906	MS35338-119	WASHER,LOCK	36
44	XDOZZ	96906	MS24618-42	SCREW,TAPPING,THREA	36

END OF FIGURE

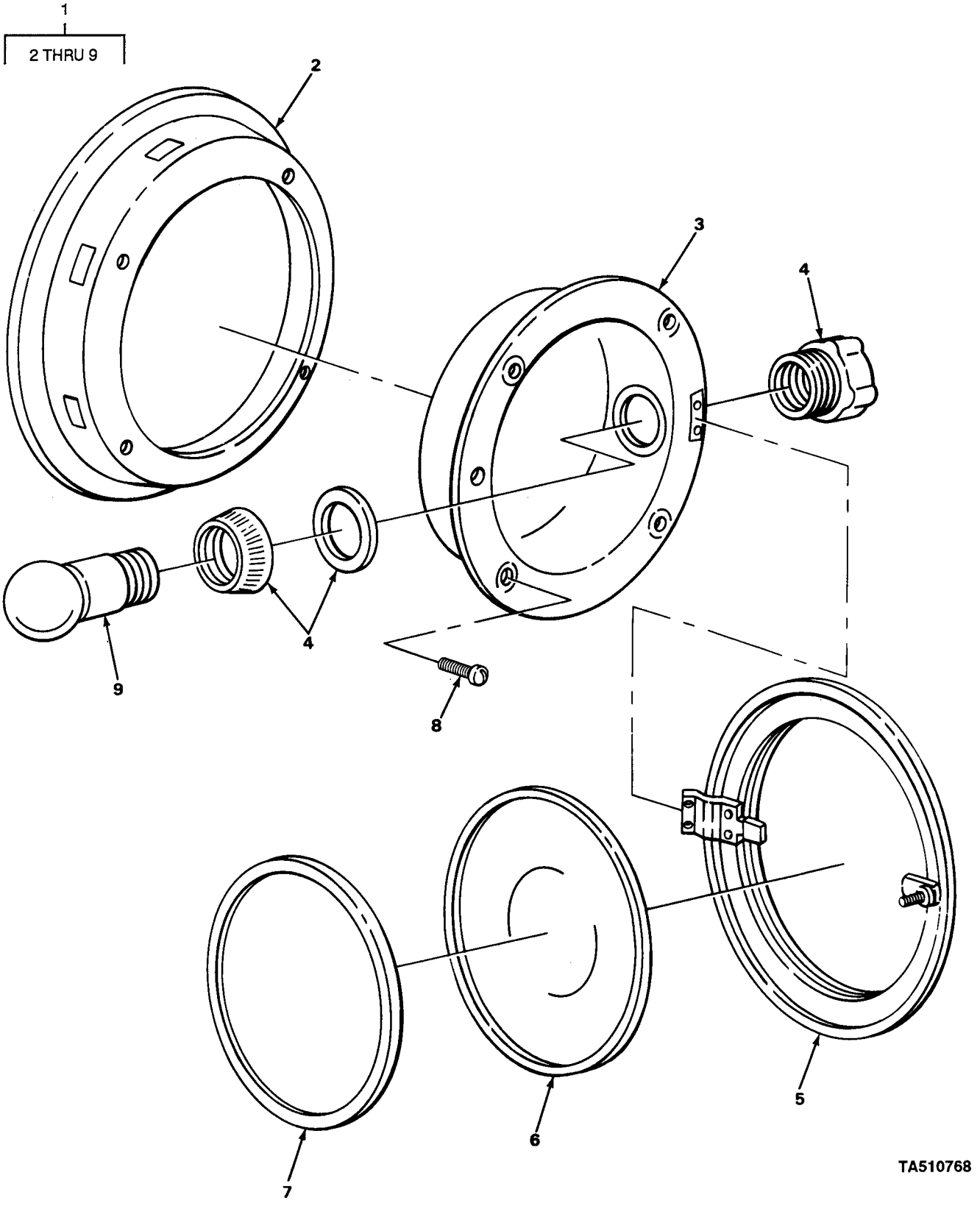

FIGURE 8. DOMELIGHT, 110-VOLT

(1) ITEM NO	(2) SMR CODE	(3) CAGEC	(4) PART NUMBER	(5) DESCRIPTION AND USABLE ON CODES (UOC)	(6) QTY
				GROUP 0609 LIGHTS	
				FIG. 8 DOMELIGHT, 110-VOLT	
1	PAOOO	01857	89981	LIGHT, DOME BLUE	1
1	PAOOO	01857	7092279	LIGHT,DOME LATE M146 UOC:868	8
1	PAOOO	01 857	7092279	LIGHT,DOME (WHITE) EARLY MODELS UOC:868	7
2	XAOZZ	19975	91719	.BODY UOC:868	1
3	XAOZZ	19975	91720	.BOX UOC:868	1
4	XDOZZ	19975	90070	.SOCKET ASSY UOC:868	1
5	XAOZZ	19975	91718	.DOOR UOC:868	1
6	PAOZZ	19975	89985	.LENS,LIGHT,BLUE UOC:868	1
6	PAOZZ	19207	8328122	.LENS,LIGHT,CLEAR UOC:868	1
7	XDOZZ	19976	90076	.GASKET UOC:868	1
8	XDOZZ	19975	145189	.SCREW,MACHINE UOC:868	4
9	PAOZZ	08108	75A115V	.LAMP,INCANDESCENT UOC:868	1

END OF FIGURE

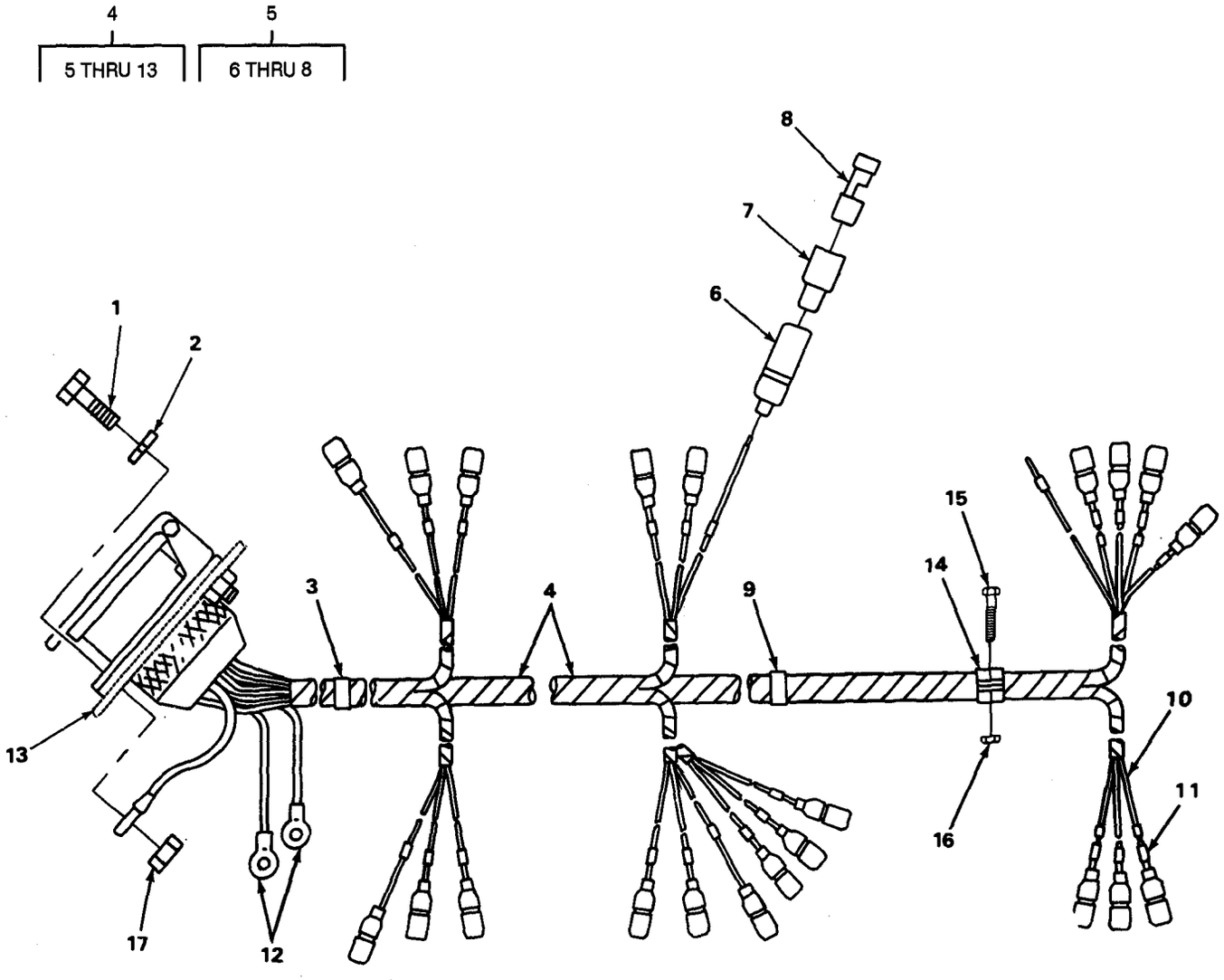

TA510769

FIGURE 9. WIRING HARNESS, 24-VOLT.

(1) ITEM NO	(2) SMR CODE	(3) CAGEC	(4) PART NUMBER	(5) DESCRIPTION AND USABLE ON CODES (UOC)	(6) QTY
				GROUP 0613 HULL OR CHASSIS WIRING HARNESS	
				FIG. 9 WIRING HARNESS, 24-VOLT	
1	PAOZZ	30076	128720	SCREW,CAP,HEXAGON H	4
2	PAOZZ	96906	MS35338-44	WASHER,LOCK	4
3	PFFZZ	96906	MS35489-69	GROMMET,NONMETALLIC WIRING HARNESS	8
3	PFFZZ	96906	MS35489-64	GROMMET,NONMETALLIC	1
3	PFFZZ	96906	MS35489-78	GROMMET,NONMETALLIC	19
4	AFFFF	19207	7034283	HARNESS ASSEMBLY	1
5	PAOZZ	19207	8338564	.TERMINAL ASSEMBLY	22
6	PAOZZ	19207	8338561	..SHELL,ELECTRICAL CO	1
7	PAOZZ	19207	8338562	..INSULATOR,BUSHING	1
8	XDOZZ	19207	7060818	..TERMINAL,LUG	1
9	PFFZZ	96906	MS39020-4	.BAND,MARKER	1
10	MFFZZ	19207	1526499-1	.WIRE,ELECTRICAL MAKE FROM WIRE P/N M13486-1-5	V
11	PFFZZ	96906	MS39020-1	.BAND,MARKER	22
12	PFOZZ	96906	MS25036-102	.TERMINAL,LUG	2
13	PAOZZ	96906	MS75021-1	.CONNECTOR,RECEPTACL	1
14	PAFZZ	81348	CMDX2-3PT573036	CLAMP,LOOP	33
14	PAFZZ	96906	MS21333-97	CLAMP,LOOP	3
14	PAFZZ	96906	MS21333-103	CLAMP,LOOP	2
14	PAFZZ	96906	MS21333-105	CLAMP,LOOP	2
15	PAFZZ	96906	MS35191-290	SCREW,MACHINE	16
15	XDFZZ	96906	MS24618-50	SCREW,TAPPING,THREA	20
15	PAFZZ	96906	MS35191-289	SCREW,MACHINE	3
16	PAFZZ	96906	MS21083N4	NUT,SELF-LOCKING,HE	19
17	PAOZZ	96906	MS51967-2	NUT,PLAIN,HEXAGON	4

END OF FIGURE

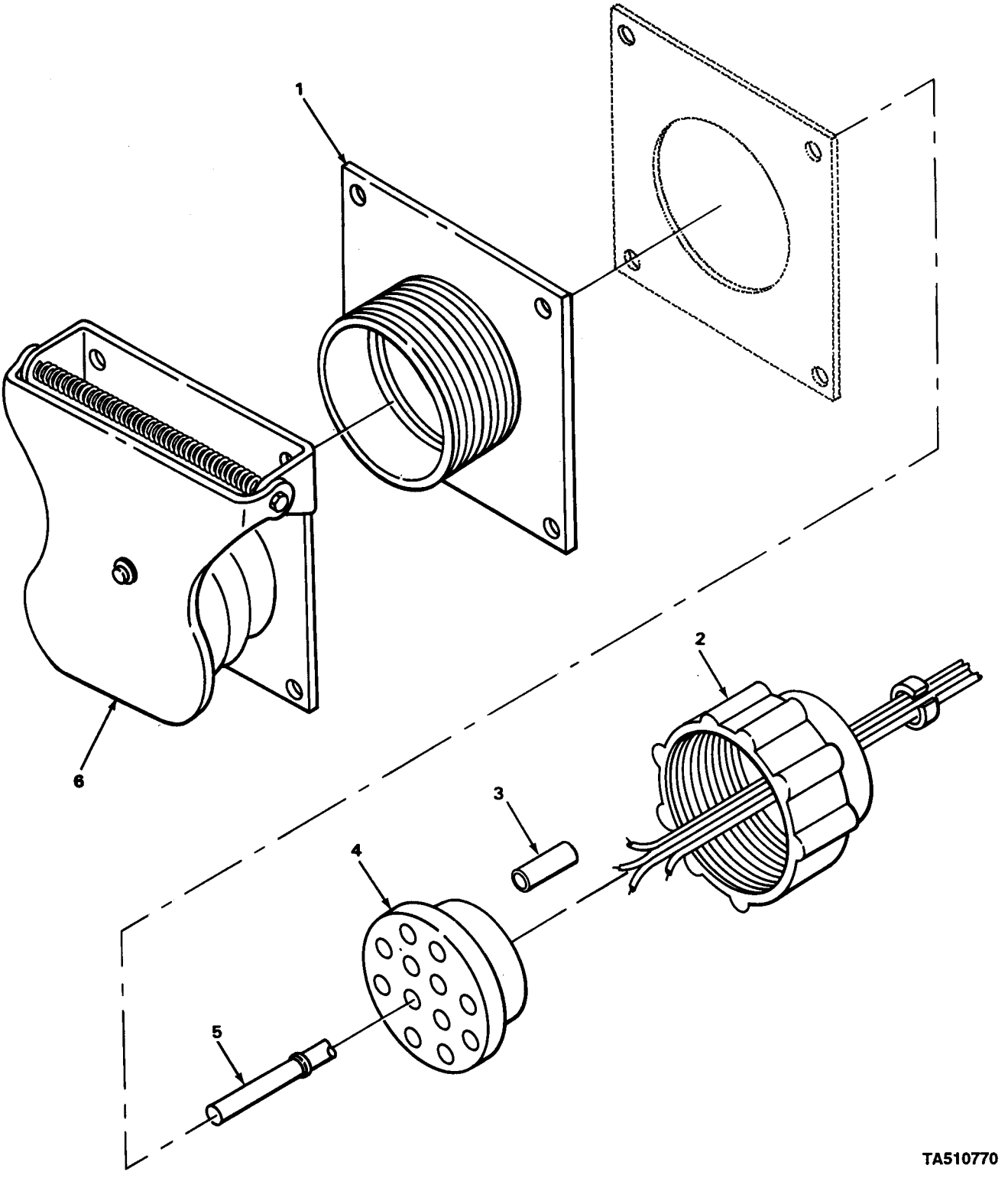

FIGURE 10. RECEPTACLE ASSEMBLY 24-VOLT, P/N MS75021-1.

(1) ITEM NO	(2) SMR CODE	(3) CAGEC	(4) PART NUMBER	(5) DESCRIPTION AND USABLE ON CODES (UOC)	(6) QTY
				GROUP 0613 HULL OR CHASSIS WIRING HARNESS FIG. 10 RECEPTACLE ASSEMBLY,24-VOLT, P/N MS75021-1.	
1	PAFZZ	19207	8701268	SHELL,ELECTRICAL CO	1
2	PFFZZ	19207	7723309	NUT,PLAIN,KNURLED	1
3	PAOZZ	77820	10-33646	CONTACT,ELECTRICAL	12
4	PAFZZ	19207	7722333	BUSHING,NONMETALLIC	1
5	PAFZZ	19207	7716683	INSERT,ELECTRICAL C	12
6	PAOZZ	19207	7731428	COVER,ELECTRICAL CO	1

END OF FIGURE

5
6 THRU 8

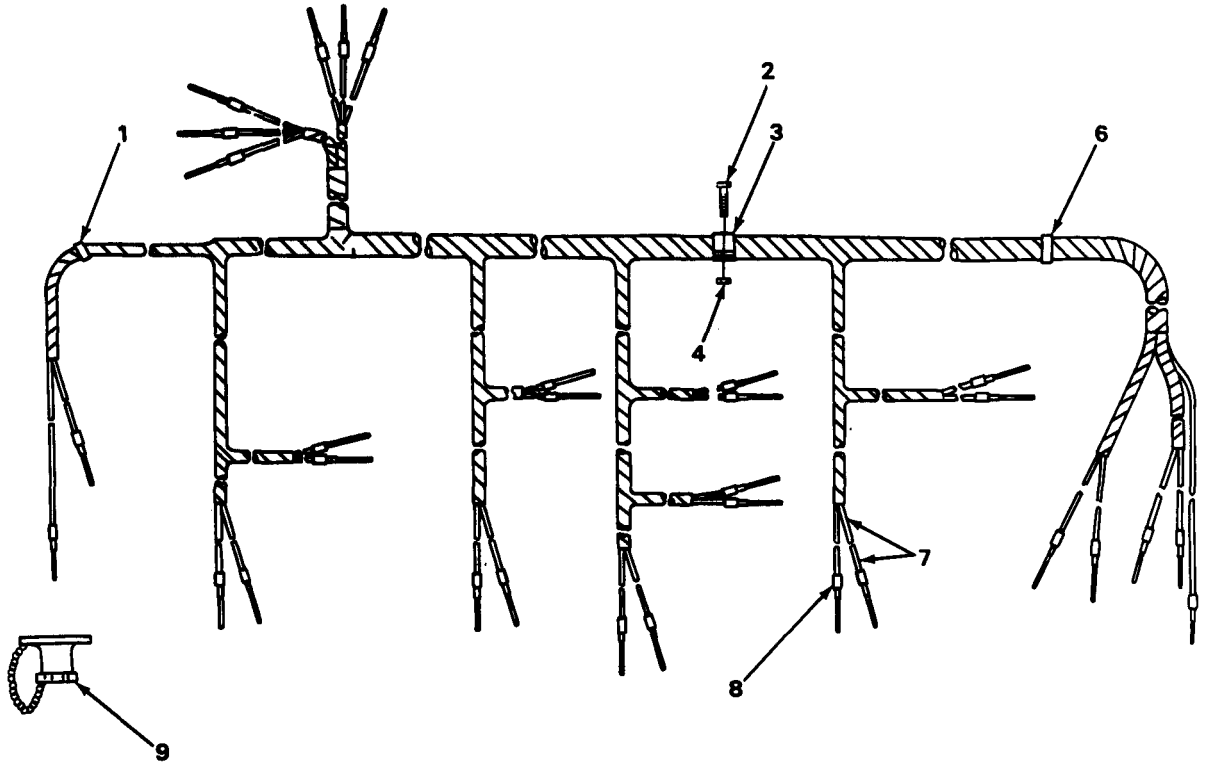

TA510771

FIGURE 11. WIRING HARNESS, 110-VOLT

(1) ITEM NO	(2) SMR CODE	(3) CAGEC	(4) PART NUMBER	(5) DESCRIPTION AND USABLE ON CODES (UOC)	(6) QTY
				GROUP 0613 HULL OR CHASSIS WIRING HARNESS	
				FIG. 11 WIRING HARNESS, 110-VOLT	
1	PAFZZ	96906	MS35489-46	GROMMET,NONMETALLIC. UOC:868	V
1	PAFZZ	70485	AN931-10-14	GROMMET,NONMETALLIC UOC:868	V
2	PAFZZ	96906	MS90727-3	SCREW,CAP,HEXAGON H UOC:868	12
2	PFFZZ	96906	MS51861-67C	SCREW,TAPPING,THREA UOC:868	V
2	PAFZZ	96906	MS35191-289	SCREW,MACHINE UOC:868	13
3	PAFZZ	96906	MS21333-99	CLAMP,LOOP UOC:868	10
3	PAFZZ	81348	CMDX2-3PT573036	CLAMP,LOOP UOC:868	10
3	PAFZZ	96906	MS21333-103	CLAMP,LOOP UOC:868	10
4	PAFZZ	96906	MS21083N4	NUT,SELF-LOCKING,HE UOC:868	25
5	AFFFF	19207	10919683	HARNESS ASSEMBLY UOC:868	1
6	PFFZZ	96906	MS39020-2	.BAND,MARKER UOC:868	1
7	MFFZZ	19207	1526499-01	.WIRE,ELECTRICAL MAKE FROM WIRE P/N M13486-1-5 UOC:868	31
8	PFFZZ	96906	MS39020-1	.BAND,MARKER UOC:868	31
9	XDOZZ	19207	8389423	RECEPTACLE ASSEMBLY UOC:868	1
				END OF FIGURE	

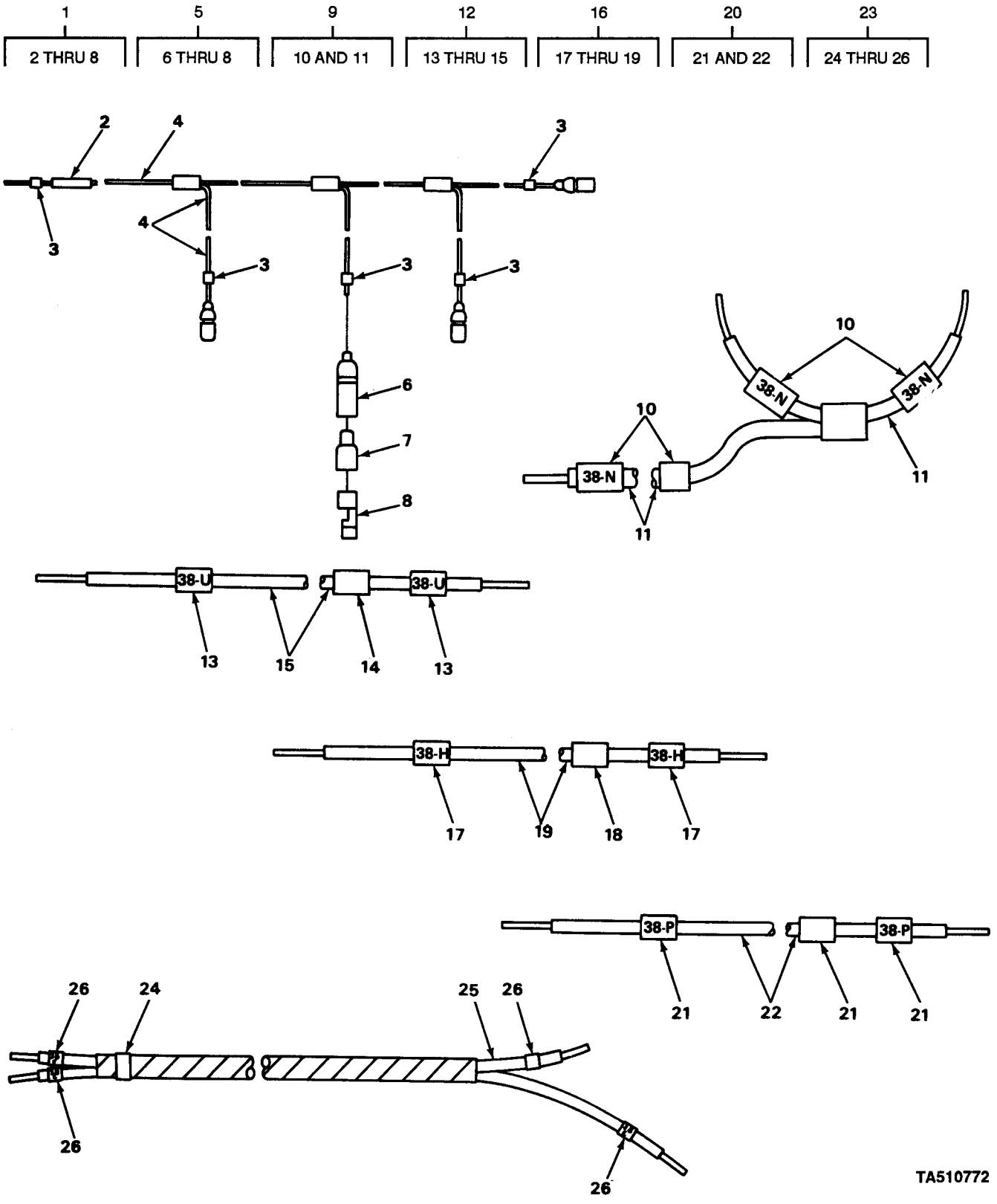

FIGURE 12. WIRING HARNESSES AND CABLE ASSEMBLIES.

(1) ITEM NO	(2) SMR CODE	(3) CAGEC	(4) PART NUMBER	(5) DESCRIPTION AND USABLE ON CODES (UOC)	(6) QTY
				GROUP 0613 HULL OR CHASSIS WIRING HARNESS	
				FIG. 12 WIRING HARNESSES AND CABLE ASSEMBLIES	
1	AFFFF	19207	7034091	HARNESS ASSEMBLY	1
2	PAFZZ	83194	1628	.BAND,MARKER	1
3	PFFZZ	96906	MS39020-1	.BAND,MARKER	5
4	MFFZZ	19207	1526499-1	.WIRE,ELECTRICAL MAKE FROM WIRE P/N M13486-1-5	V
5	PAFZZ	19207	8338564	.TERMINAL ASSEMBLY	4
6	PAFZZ	19207	8338561	..SHELL,ELECTRICAL CO	5
7	PAFZZ	19207	8338562	..INSULATOR,BUSHING	1
8	XDFZZ	19207	7060818	..TERMINAL,LUG	1
9	AFFFF	19207	7096963	CABLE ASSEMBLY	1
10	PFFZZ	96906	MS39020-2	.BAND,MARKER	4
11	MFFZZ	19207	7056676-18	.WIRE,ELECTRICAL MAKE FROM WIRE P/N M13486/1-10	1
12	AFFFF	19207	7096960	CABLE ASSEMBLY	1
13	PFFZZ	96906	MS39020-1	.BAND,MARKER	2
14	PFFZZ	83194	1628	.BAND,MARKER	1
15	MFFZZ	19207	1526499-38	.WIRE,ELECTRICAL MAKE FROM WIRE P/N M13486-1-5	1
16	AFFFF	19207	7096961	CABLE ASSEMBLY	1
17	PFFZZ	96906	MS39020-1	.BAND,MARKER	2
18	PFFZZ	83194	1628	.BAND,MARKER	1
19	MFFZZ	19207	1526499-16	.WIRE,ELECTRICAL MAKE FROM WIRE P/N M13486-1-5	1
20	AFFFF	19207	7096962	CABLE ASSEMBLY	1
21	PFFZZ	96906	MS39020-2	.BAND,MARKER	3
22	MFFZZ	19207	7056676-8	.WIRE,ELECTRICAL MAKE FROM WIRE P/N M13486/1-10	1
23	AFFFF	19207	10919694	HARNESS ASSEMBLY	1
24	PFFZZ	81349	M43436-1-3	.BAND,MARKER	1
25	MFFZZ	19207	M13486-1-10-1	.WIRE,ELECTRICAL MAKE FROM WIRE P/N M13486/1-10	1
26	PFFZZ	96906	MS39020-2	.BAND,MARKER	4

END OF FIGURE

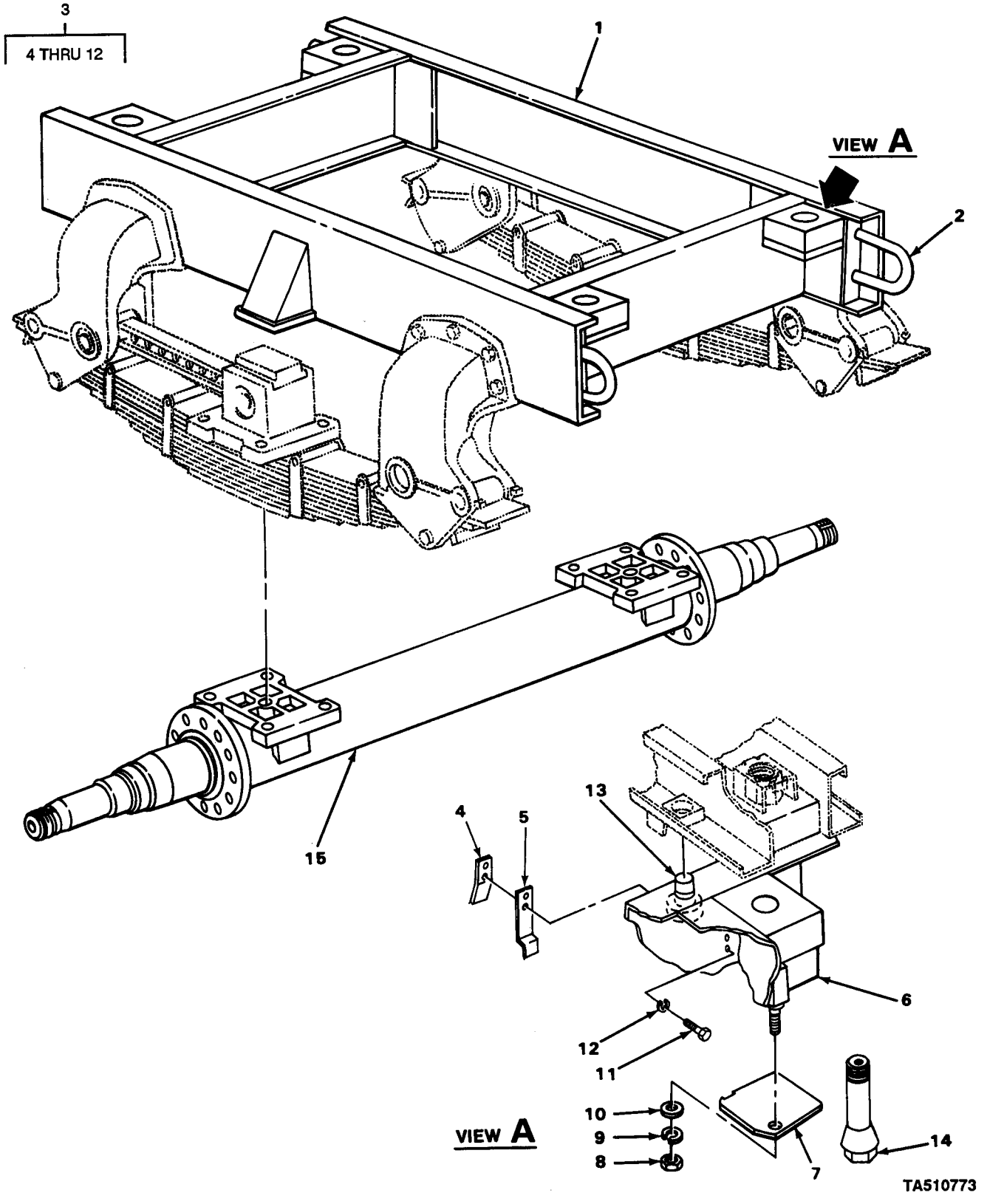

FIGURE 13. AXLE.

(1) ITEM NO	(2) SMR CODE	(3) CAGEC	(4) PART NUMBER	(5) DESCRIPTION AND USABLE ON CODES (UOC)	(6) QTY
				GROUP 11 REAR AXLE	
				GROUP 1100 REAR AXLE ASSEMBLY	
				FIG. 13 AXLE	
1	XDFZZ	19207	7034108	FRAME,BOGGIE	1
2	XDFZZ	19207	7979892	LOOP,FRAME	4
3	XDFFF	19207	7034111	COVER ASSEMBLY	4
4	XDFZZ	19207	7034122	.STOP	1
5	XDFZZ	19207	7034123	.SPRING	1
6	XDFZZ	19207	7015106	.BLOCK	1
7	XDFZZ	19207	7034065	.COVER	1
8	PFFZZ	24617	9413509	.NUT,PLAIN,HEXAGON	1
9	PFFZZ	96906	MS35338-48	.WASHER,LOCK	1
10	PAFZZ	96906	MS27183-19	.WASHER,FLAT	1
11	PAFZZ	96906	MS35207-263	.SCREW,MACHINE	2
12	PFFZZ	96906	MS35338-43	.WASHER,LOCK	2
13	XDFZZ	19207	7034107	DOWEL	4
14	XDFZZ	19207	7034159	MASTERPIN	4
15	PAFZZ	19207	8710746	AXLE, VEHICULAR,	1
				END OF FIGURE	

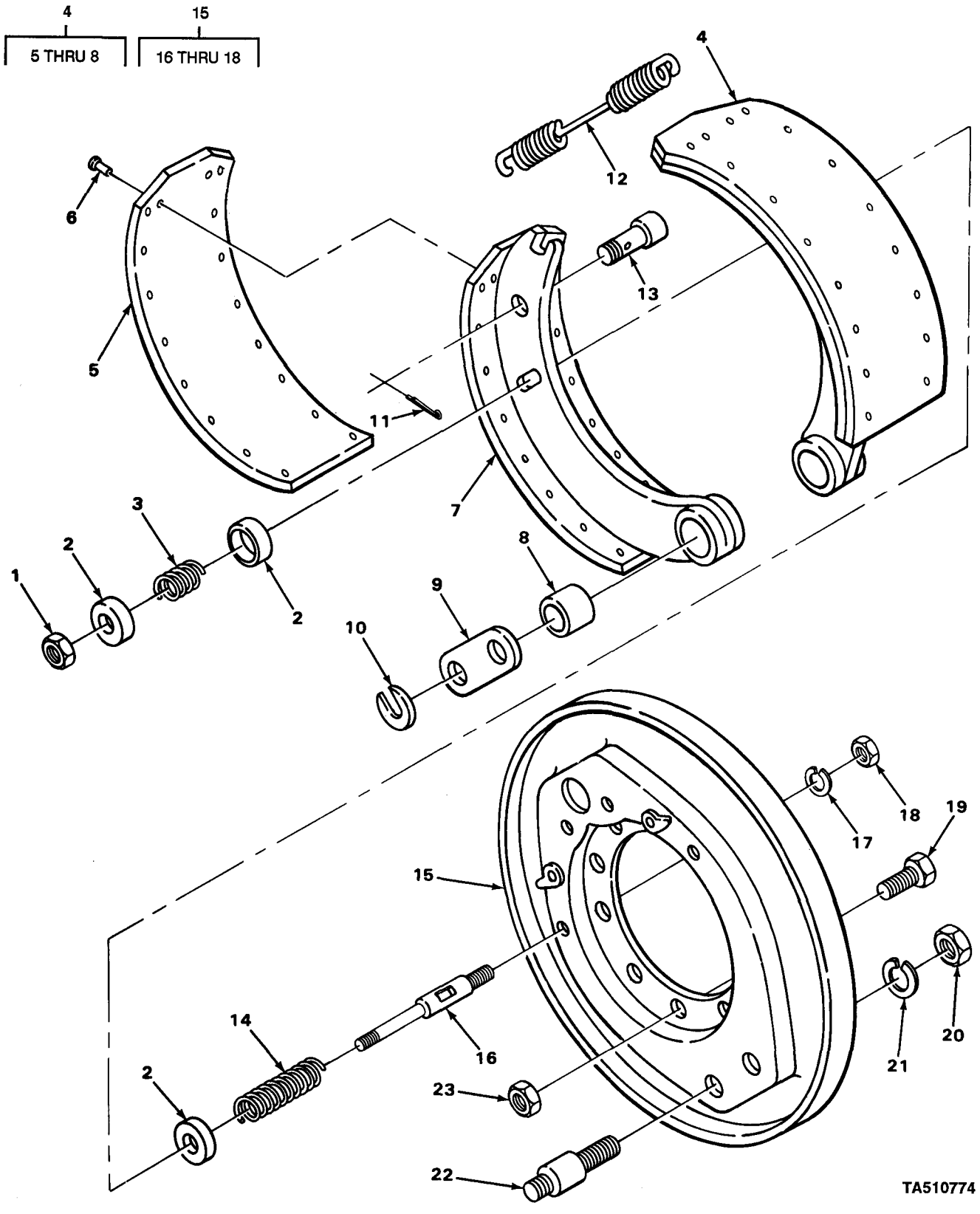

FIGURE 14. SERVICE BRAKES (MODEL M146 OPTIONAL).

(1) ITEM NO	(2) SMR CODE	(3) CAGEC	(4) PART NUMBER	(5) DESCRIPTION AND USABLE ON CODES (UOC)	(6) QTY
				GROUP 12 BRAKES	
				GROUP 1202 SERVICE BRAKES FIG. 14 SERVICE BRAKES (MODEL 146 OPTIONAL)	
1	PAOZZ	19207	11663236	NUT,SELF-LOCKING,HE UOC:868	4
2	PAOZZ	19207	11663232	WASHER,RECESSED UOC:868	12
3	PAOZZ	19207	11663233	SPRING,HELICAL,COMP UOC:868	4
4	PAOFF	19207	5705700	BRAKE SHOE SET UOC:868	2
5	PAFZZ	22337	4B22GG	.LINING,FRICTION UOC:868	1
6	PAFZZ	19207	10896748	.RIVET,TUBULAR UOC:868	16
7	XAFZZ	19207	8758318	.BRAKE SHOE UOC:868	1
8	PAFZZ	19207	7979280	.BUSHING,SLEEVE UOC:868	1
9	PAOZZ	78500	1745-E-5	LINK,ANCHOR,BRAKE S UOC:868	2
10	PAOZZ	19207	7979332	WASHER,SLOTTED UOC:868	4
11	PAOZZ	96906	MS24665-283	PIN,COTTER UOC:868	4
12	PAOZZ	19207	7979339	SPRING,HELICAL,EXTE UOC:868	2
13	PAOZZ	19207	7979330	PIN,GROOVED,HEADLES UOC:868	4
14	PAOZZ	19207	11663025	SPRING,HELICAL,COMP UOC:868	4
15	PAOOO	78500	A173736H8	PLATE,BACKING,BRAKE UOC:868	2
16	PAOZZ	19207	11663231	.PIN,BRAKE,MOUNTING UOC:868	2
17	PAOZZ	96906	MS35333-42	.WASHER,LOCK UOC:868	2
18	PAOZZ	96906	MS51968-8	.NUT, PLAIN, HEXAGON	2
19	PAOZZ	96906	MS90726-139	SCREW,CAP,HEXAGON H UOC:868	20
20	PAOZZ	19207	7207919	NUT,PLAIN,HEXAGON UOC:868	4
21	PAOZZ	96906	MS35338-51	WASHER,LOCK UOC:868	4
22	PAOZZ	78500	7979271	PIN,SHOULDER,HEADLE UOC:868	4
23	PAOZZ	96906	MS51922-45	NUT,SELF-LOCKING,HE UOC:868	20

END OF FIGURE

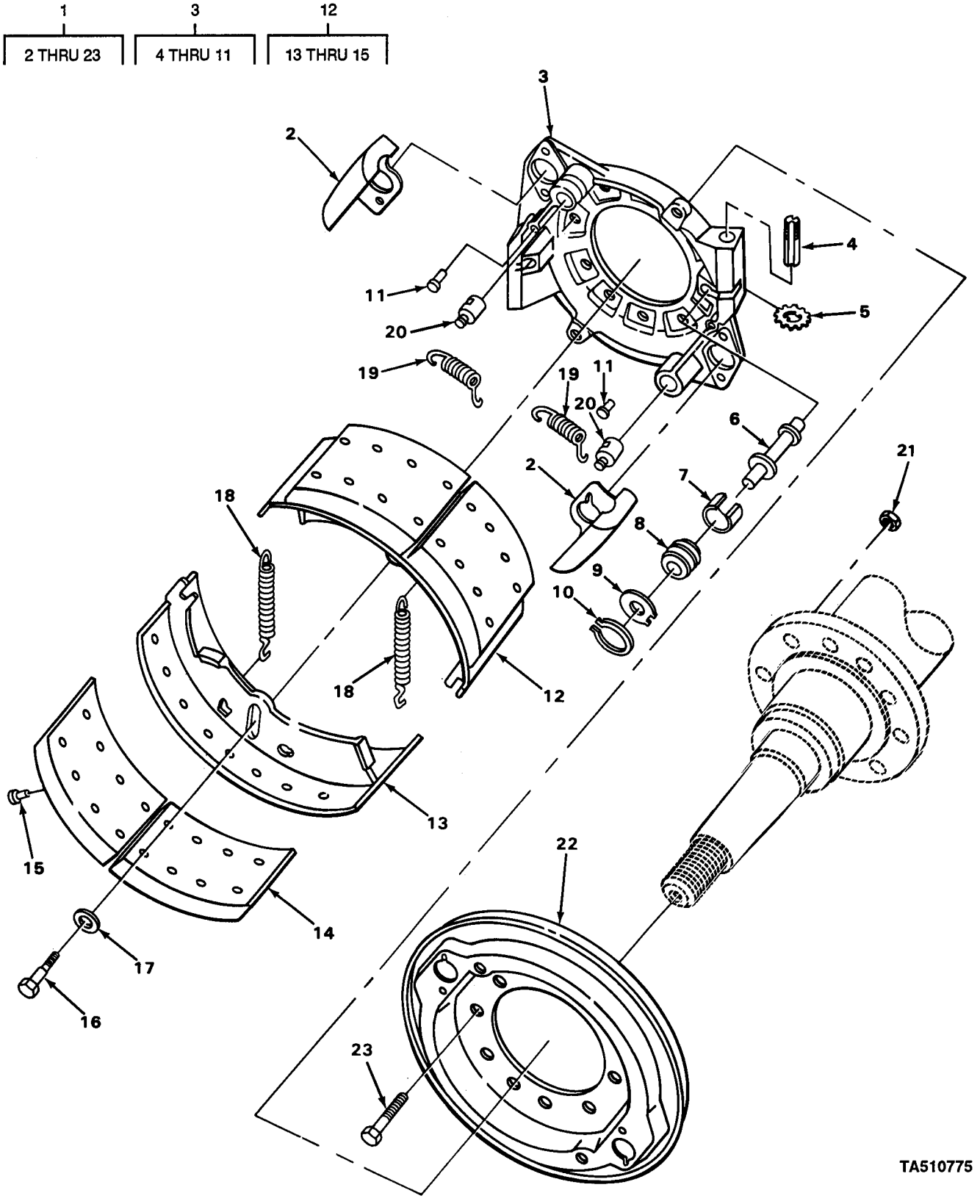

FIGURE 15. BRAKE AND SPIDER ASSEMBLY.

(1) ITEM NO	(2) SMR CODE	(3) CAGEC	(4) PART NUMBER	(5) DESCRIPTION AND USABLE ON CODES (UOC)	(6) QTY
				GROUP 1202 SERVICE BRAKES	
				FIG. 15 BRAKE AND SPIDER ASSEMBLY	
1	AOOOO	19207	8710719	BRAKE ASSEMBLY LEFT	1
1	AOOOO	19207	8710720	BRAKE ASSEMBLY RIGHT	1
2	PAOZZ	19207	8710693	.COVER ACCESS LEFT BRAKE	1
2	PAOZZ	19207	8710694	.SHIELD,SPARK,BRAKE	1
3	XBOOO	19207	8710680	.SPIDER ASSEMBLY	1
3	XBOZZ	19207	8710681	.SPIDER ASSY	1
4	PAOZZ	19207	8710708	..SCREW ADJUSTING BRA	2
5	PAOZZ	63477	F20321	..GEAR,HELICAL	2
6	PAOZZ	19207	8710692	..STUD ASSEMBLY MOUNTING,WORM GEAR	2
7	PAOZZ	63477	FC10937	..BUSHING,SLEEVE WORM GEAR	2
8	PAOZZ	19207	8710695	..GEAR,WORM	2
9	PAOZZ	19207	8710673	..WASHER,KEY	2
10	PAOZZ	19207	8710672	..RING,RETAINING WORM GEAR	2
11	PAOZZ	63477	FC19136	..PIN,SHOE RETURN SPR	2
12	PAOFF	96906	MS1003-1	.BRAKE SHOE W/LINING,ASSY(SERVICE BRAKE,LEFT AND RIGHT)	2
13	XDFZZ	19207	8710714	..WEB AND TABLE	1
14	PAFZZ	19207	8710716	..LINING,FRICTION	1
15	PAFZZ	96906	MS16536-175	..RIVET,TUBULAR	16
16	PAOZZ	19207	8710683	.BOLT, SHOULDER GUIDE, SERVICE BRAKE	2
17	PAOZZ	19207	8710685	.WASHER,FLAT	2
18	PAOZZ	19207	8710696	.SPRING, HELICAL, LONG	2
19	PAOZZ	19207	8710697	.SPRING, HELICAL, SHORT, BRAKES	2
20	PAOZZ	63477	FC19500A	.PIN, ANCHOR	2
21	PAOZZ	96906	MS51922-45	.NUT,SELF-LOCKING,HE	10
22	XDOZZ	63477	FF20339	.PLATE,BACKING,BRAKE LEFT BRAKE	1
22	PAOZZ	19207	8710718	.PLATE,BACKING,BRAKE RIGHT BRAKE	1
23	PAOZZ	96906	MS90726-139	.SCREW,CAP,HEXAGON H	10
				END OF FIGURE	

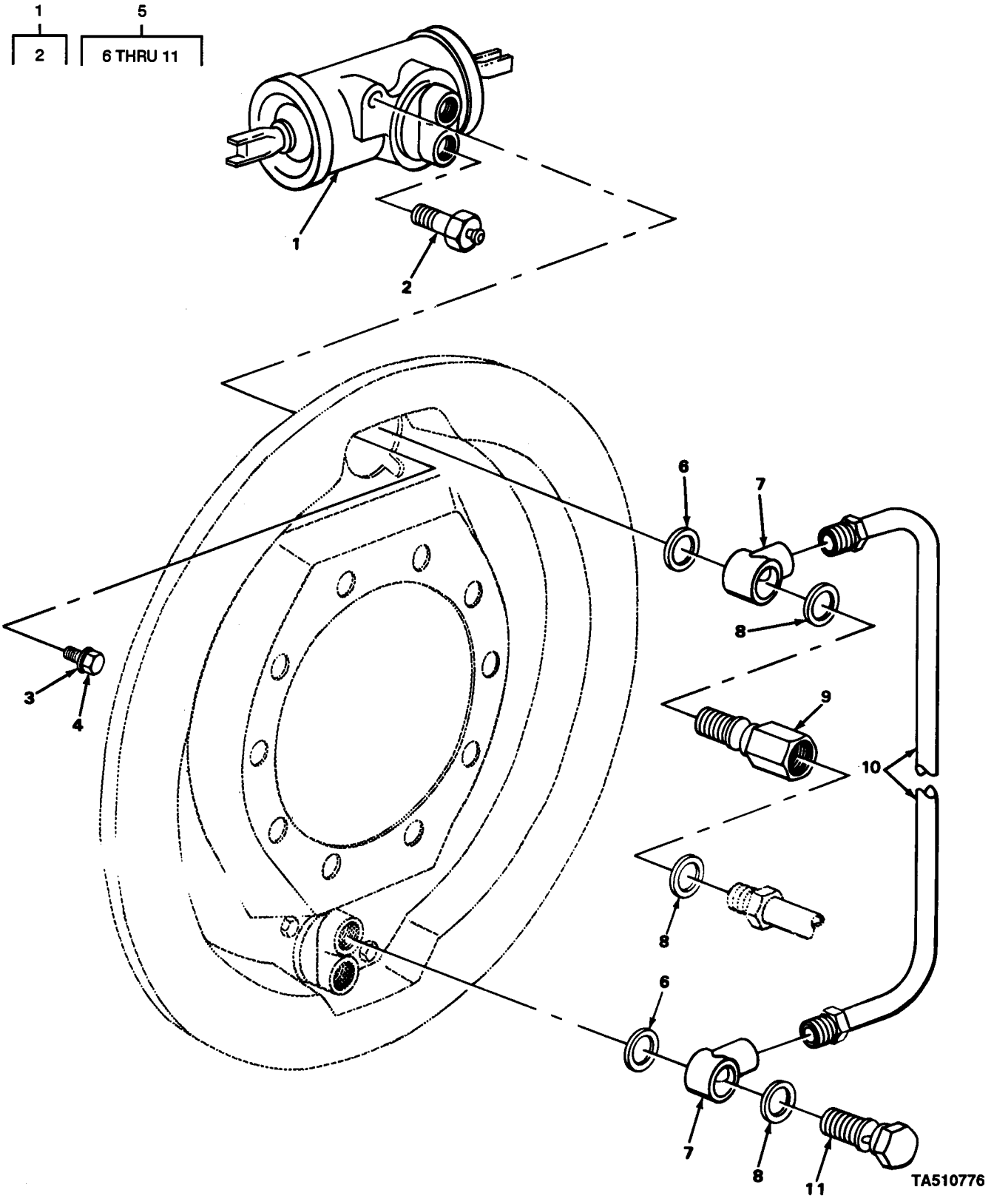

FIGURE 16. BRAKE CYLINDER, LINES, AND FITTINGS.

(1) ITEM NO	(2) SMR CODE	(3) CAGEC	(4) PART NUMBER	(5) DESCRIPTION AND USABLE ON CODES (UOC)	(6) QTY
				GROUP 1204 HYDRAULIC BRAKE SYSTEM	
				FIG. 16 BRAKE CYLINDER, LINES, AND FITTINGS	
1	PAOZZ	63477	F56115	CYLINDER ASSEMBLY,H WHEEL SERVICE BRAKE	4
2	PAOZZ	19207	7373260	.VALVE,BLEEDER,HYDRA	1
3	PAOZZ	96906	MS35338-45	WASHER,LOCK	2
4	PAOZZ	96906	MS90725-34	SCREW CAP HEXAGON	8
5	PAOOO	63477	FD20333	TUBE ASSEMBLY,METAL	2
6	PAOZZ	19207	5298653	.GASKET INLET FILLING, WHEEL CYLINDER	2
7	PAOZZ	19207	7745464	.TEE,TUBE	2
8	PAOZZ	19207	7412088	.WASHER REAR AXLE WHEEL CYLINDER INLET CONNECTOR	3
9	PAOZZ	19207	8710676	.TUBE ASSEMBLY,METAL	1
10	PAOZZ	19207	8710709	.BOLT FLUID PASSAGE TUBE HOSE TO BRAKE LINE	2
11	PAOZZ	81343	6-4 120102BA	.ADAPTER,STRAIGHT,PI	1
				END OF FIGURE	

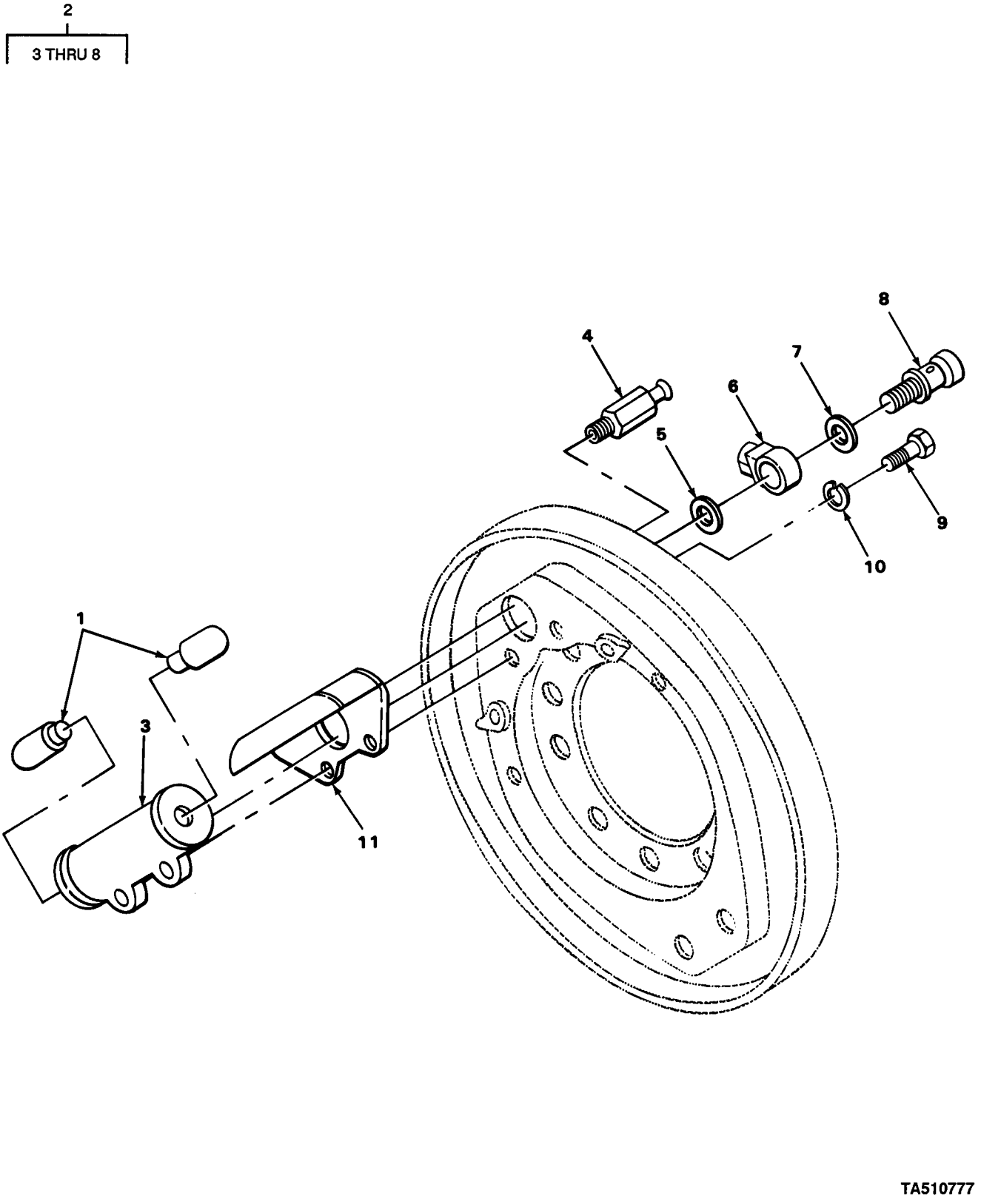

FIGURE 17. WHEEL CYLINDER.

(1) ITEM NO	(2) SMR CODE	(3) CAGEC	(4) PART NUMBER	(5) DESCRIPTION AND USABLE ON CODES (UOC)	(6) QTY
				GROUP 1204 HYDRAULIC BRAKE SYSTEM	
				FIG. 17 WHEEL CYLINDER	
1	PAOZZ	61361	X10710	LINK,WHEEL CYLINDER	4
2	PAOZZ	19207	8758259	CYLINDER ASSEMBLY,H	2
3	XAOZZ	63477	FD-6145	.CYLINDER,HYDRAULIC	1
4	PAOZZ	76005	FC11589	.BLEEDER VALVE,HYDRA	1
5	PAOZZ	19207	5214539	.WASHER,FLAT	1
6	PAOZZ	03776	5282743	.CONNECTOR,MULTIPLE,	1
7	PAOZZ	19207	5160323	.WASHER,FLAT	1
8	PAOZZ	19207	5167419	.BOLT,FLUID PASSAGE	1
9	PAOZZ	96906	MS18154-58	SCREW,CAP,HEXAGON H	4
10	PAOZZ	16764	110730	WASHER,LOCK	4
11	PAOZZ	78500	2797E5	COVER,ACCESS	2
				END OF FIGURE	

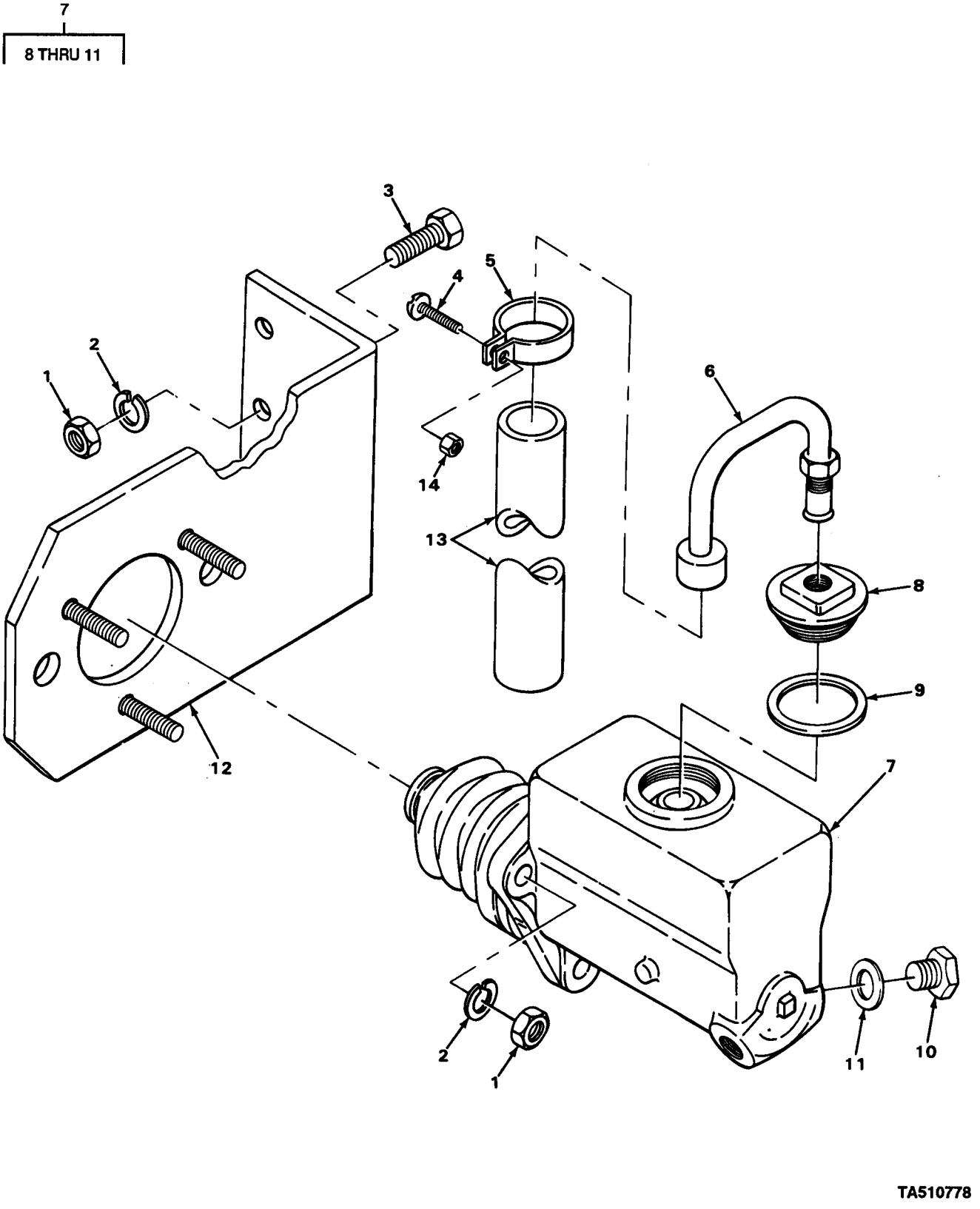

FIGURE 18. MASTER CYLINDER.

(1) ITEM NO	(2) SMR CODE	(3) CAGEC	(4) PART NUMBER	(5) DESCRIPTION AND USABLE ON CODES (UOC)	(6) QTY
				GROUP 1204 HYDRAULIC BRAKE SYSTEM	
				FIG. 18 MASTER CYLINDER	
1	PAOZZ	96906	MS51967-8	NUT, PLAIN, HEXAGON	6
2	PAOZZ	16764	110730	WASHER,LOCK	6
3	PAOZZ	96906	MS90726-60	SCREW,CAP,HEXAGON H	6
4	PAOZZ	96906	MS35206-268	SCREW,MACHINE	1
5	PAOZZ	96906	MS35842-12	CLAMP,HOSE	1
6	PAOZZ	23705	A298322	TUBE ASSEMBLY,METAL	1
7	PAOOO	19207	8332086	CYLINDER ASSEMBLY,H MASTER HYDRAULIC	1
8	PAOZZ	63477	7979691	.CAP,FILLER OPENING	1
9	PAOZZ	19207	7373354	.SPACER,RING	1
10	PAOZZ	19207	5215673	.PLUG,MACHINE THREAD	1
11	PAOZZ	19207	5156636	.GASKET	1
12	PAOZZ	19207	8730456	BRACKET, MOUNTING,	1
13	PAOZZ	96906	MS521301A204120	HOSE,NONMETALLIC	1
14	PAOZZ	96906	MS35649-202	NUT,PLAIN,HEXAGON	1
				END OF FIGURE	

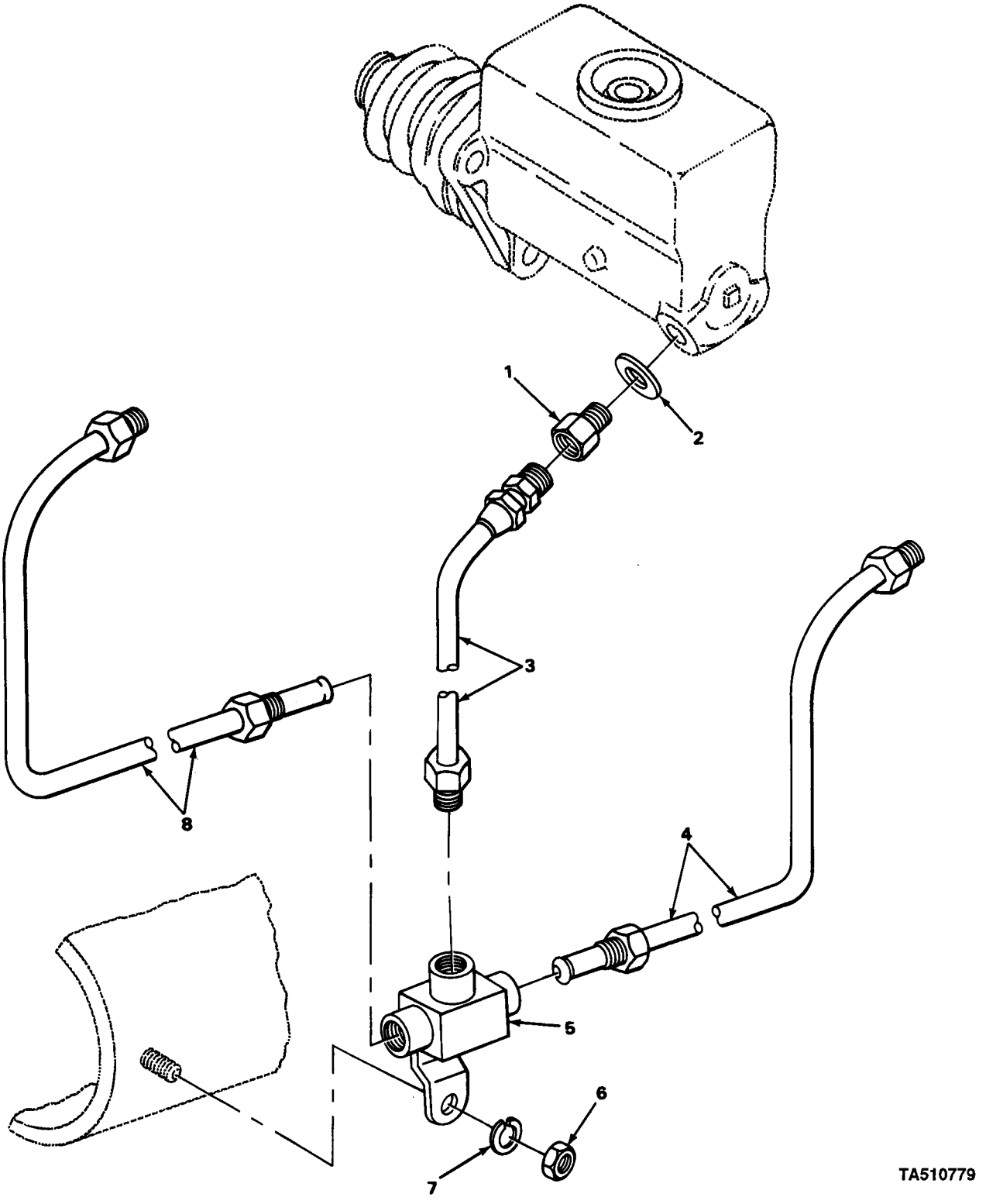

FIGURE 19. MASTER CYLINDER LINES AND FITTINGS.

(1) ITEM NO	(2) SMR CODE	(3) CAGEC	(4) PART NUMBER	(5) DESCRIPTION AND USABLE ON CODES (UOC)	(6) QTY
				GROUP 1204 HYDRAULIC BRAKE SYSTEM	
				FIG. 19 MASTER CYLINDER LINES AND FITTINGS	
1	PAOZZ	19207	5186963	ADAPTER,STRAIGHT,TU	1
2	PAOZZ	19207	5156636	GASKET	1
3	PAOZZ	19207	7409331	HOSE ASSEMBLY,NONME RUBBER	1
4	PAOZZ	19207	8742717	TUBE ASSEMBLY,METAL	1
5	XDOZZ	19207	7034067	TEE, TUBE	1
6	PAOZZ	96906	MS51967-8	NUT,PLAIN,HEXAGON	1
7	PAOZZ	16764	110730	WASHER,LOCK	1
8	PAOZZ	19207	8742716	TUBE ASSEMBLY,METAL	1
				END OF FIGURE	

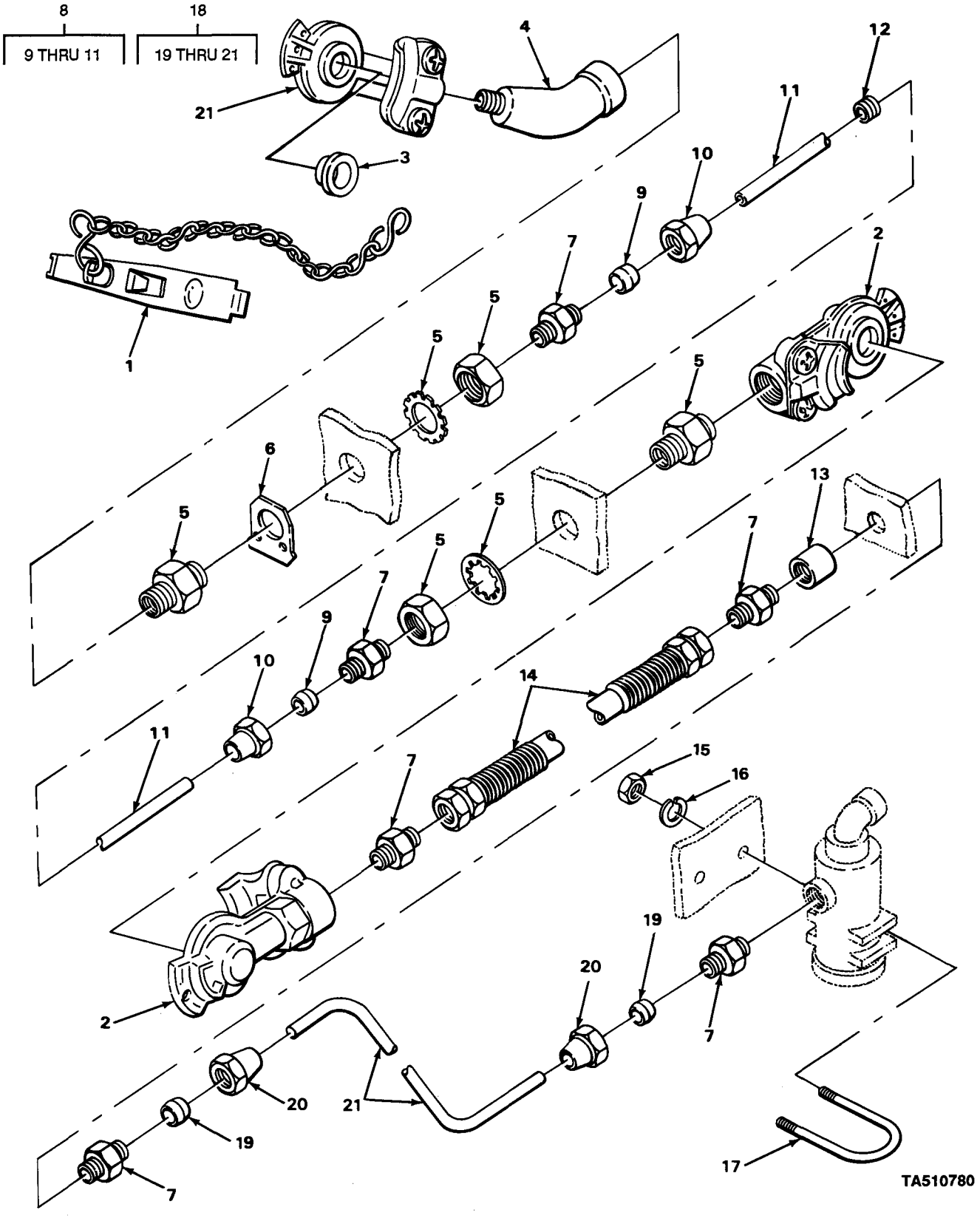

FIGURE 20. AIR COUPLINGS, LINES, AND FITTINGS.

(1) ITEM NO	(2) SMR CODE	(3) CAGEC	(4) PART NUMBER	(5) DESCRIPTION AND USABLE ON CODES (UOC)	(6) QTY
				GROUP 1208 AIRBRAKE SYSTEM	
				FIG. 20 AIR COUPLINGS, LINES, AND FITTINGS	
1	PAOZZ	19207	7411021	DUMMY COUPLING,AUTO AIR BRAKE HOSE	4
2	PAOZZ	96906	MS35746-1	COUPLING HALF,QUICK	6
3	PAOZZ	96906	MS35748-1	PACKING,PREFORMED	1
4	PAOZZ	96906	MS39231-4	ELBOW PIPE AIR LINE GLAND COUPLING, FRONT	2
5	PAOZZ	19207	5228623	NIPPLE PIPE CUT OFF, COCK AND AIR HOSE COUPLING	6
6	PAOZZ	96906	MS53007-1	PLATE,IDENTIFICATIO SERVICE LINE	1
6	PAOZZ	96906	MS53007-2	PLATE,IDENTIFICATIO EMERGENCY LINE	1
7	PAOZZ	79146	HO-168-6X4	ADAPTER,STRAIGHT,PI	1
8	AOOOO	19207	8689208-1	TUBE ASSEMBLY	2
9	PAOZZ	03533	307-3	.SLEEVE,COMPRESSION,	2
10	PAOZZ	96906	MS39196-3	.NUT,TUBE COUPLING AIR LINE COUPLING TUBE TO BOLT ASSY	2
11	MOOZZ	19207	2033172-420	.TUBING,COPPER MAKE FROM TUBE P/N 305087-0116	1
12	PFOZZ	96906	MS35489-69	GROMMET,NONMETALLIC	22
13	PAOZZ	96906	MS39233-4	COUPLING,PIPE	2
14	PAOZZ	19207	7973340	HOSE ASSEMBLY,NONME	2
15	PAOZZ	96906	MS51967-2	NUT,PLAIN,HEXAGON	4
16	PAOZZ	96906	MS35338-44	WASHER,LOCK	4
17	PAOZZ	19207	7979296	BOLT-U AIR FILTER ASSY	2
18	AOOOO	19207	8689208-2	TUBE ASSEMBLY	2
19	PAOZZ	16662	AC2511	.SLEEVE,COMPRESSION	2
20	PAOZZ	78550	200360	.NUT,TUBE COUPLING	2
21	MOOZZ	19207	2033172-15	.TUBING,COPPER MAKE FORM TUBE P/N 305087-0116	2
				END OF FIGURE	

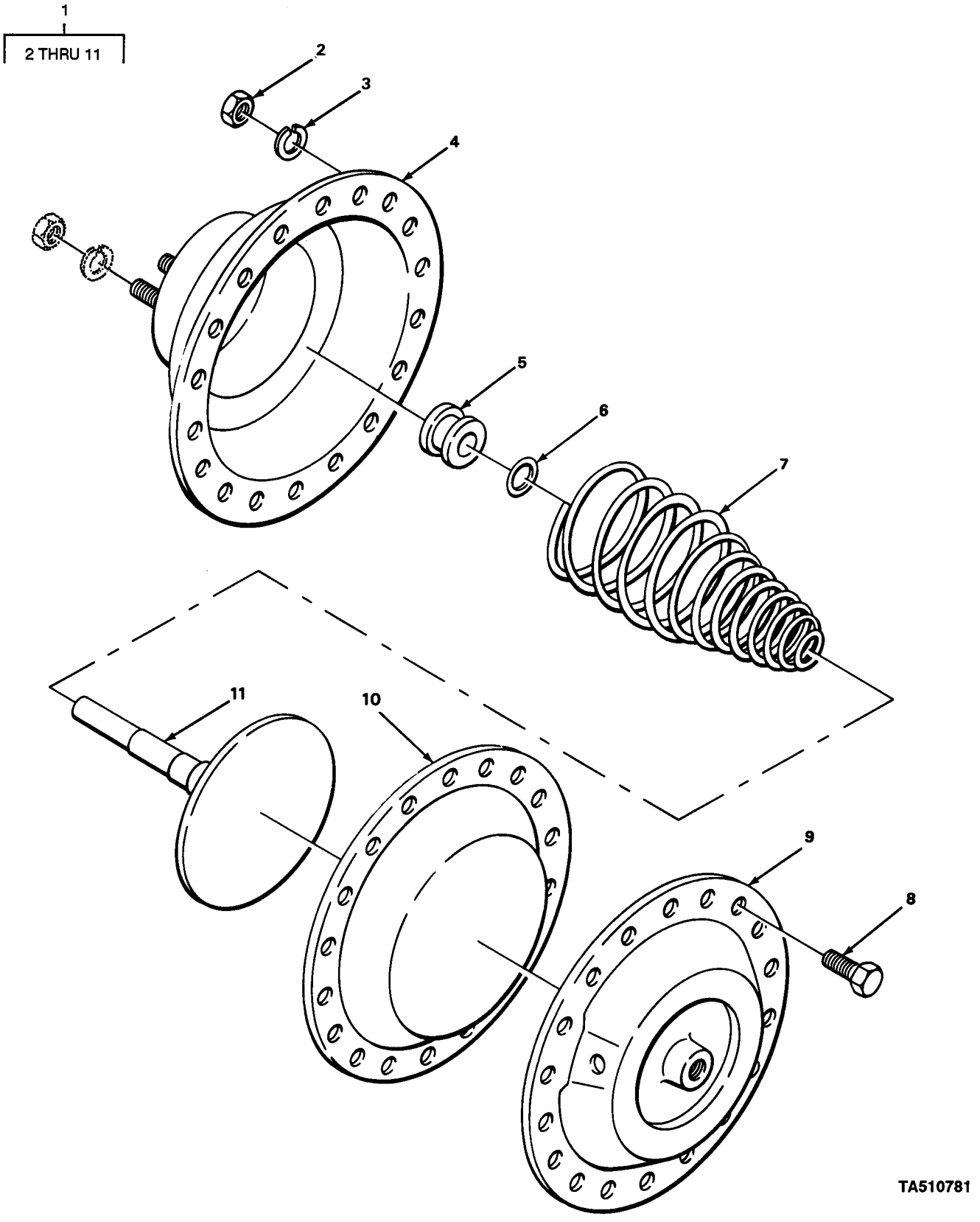

FIGURE 21. AIR CHAMBER.

(1) ITEM NO	(2) SMR CODE	(3) CAGEC	(4) PART NUMBER	(5) DESCRIPTION AND USABLE ON CODES (UOC)	(6) QTY
				GROUP 1208 AIRBRAKE SYSTEM	
				FIG. 21 AIR CHAMBER	
1	PAOFF	19207	11668361	CHAMBER,AIR BRAKE	1
2	PAFZZ	96906	MS51968-8	.NUT,PLAIN,HEXAGON	1
3	PAFZZ	19764	110730	.WASHER,LOCK	18
4	XAFZZ	19207	8380801	.BODY ASSEMBLY	1
5	PFFZZ	19207	8380814	.COLLAR,PUSH ROD	1
6	XDFZZ	19207	501212	.GASKET	1
7	PAFZZ	40342	N10673A	.SPRING,HELICAL,COMP	1
8	PAFZZ	96906	MS90726-60	.SCREW,CAP,HEXAGON H	18
9	XDFZZ	19207	8380817	.COVER ASSEMBLY	1
10	PAFZZ	19207	8380805	.DIAPHRAGM,CHAMBER,B	1
11	XDFZZ	19207	8380816	.ROD ASSEMBLY	1
				END OF FIGURE	

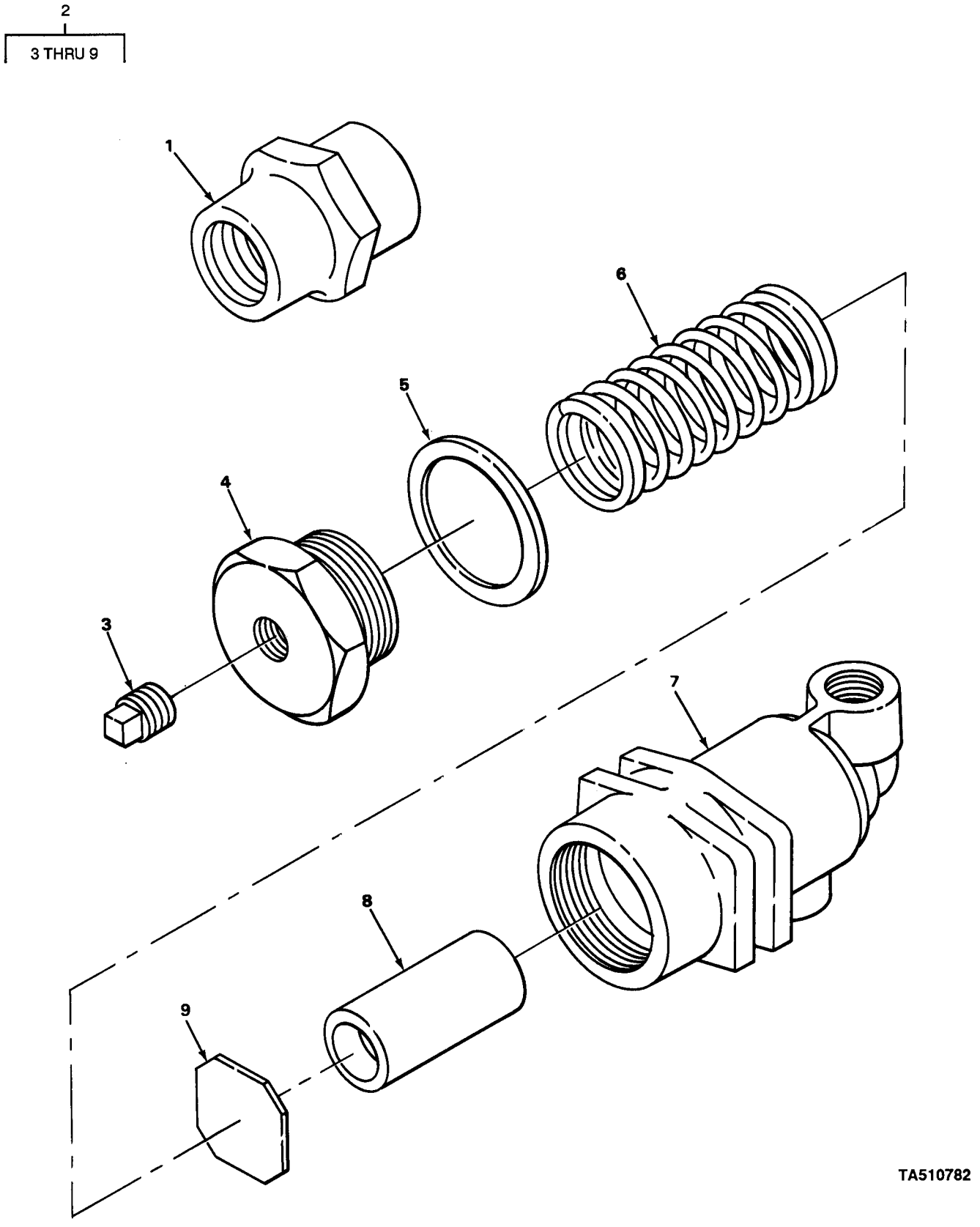

FIGURE 22. AIR FILTERS.

(1) ITEM NO	(2) SMR CODE	(3) CAGEC	(4) PART NUMBER	(5) DESCRIPTION AND USABLE ON CODES (UOC)	(6) QTY
				GROUP 1208 AIRBRAKE SYSTEM	
				FIG. 22 AIR FILTERS	
1	PAOZZ	88044	AN910-3	COUPLING,PIPE OPTIONAL AS REPLACEMENT FOR AIR FILTER	2
2	PAOOO	23705	A298749	AIR FILTER,BRAKE LI FOR MODELS WITH AIR FILTERS	2
3	PAOZZ	96906	MS20913-1S	.PLUG,PIPE	1
4	PAOZZ	06853	235091	.ADAPTER BUSHING	1
5	PAOZZ	91340	M4X509	.GASKET PART OF KIT P/N RN13A	1
6	PAOZZ	06853	235093	.SPRING,HELICAL,COMP PART FO KIT P/N RN13A	1
7	PAOZZ	40342	N-12970-A	.ELBOW BODY,AIR LINE	1
8	PAOZZ	23705	N12971	FILTER ELEMENT,FLUI PART OF KIT P/N RN13A	1
9	PAOZZ	40342	N12972	.WASHER,SPRING TENSI PART OF KIT P/N RN13A	1
				END OF FIGURE	

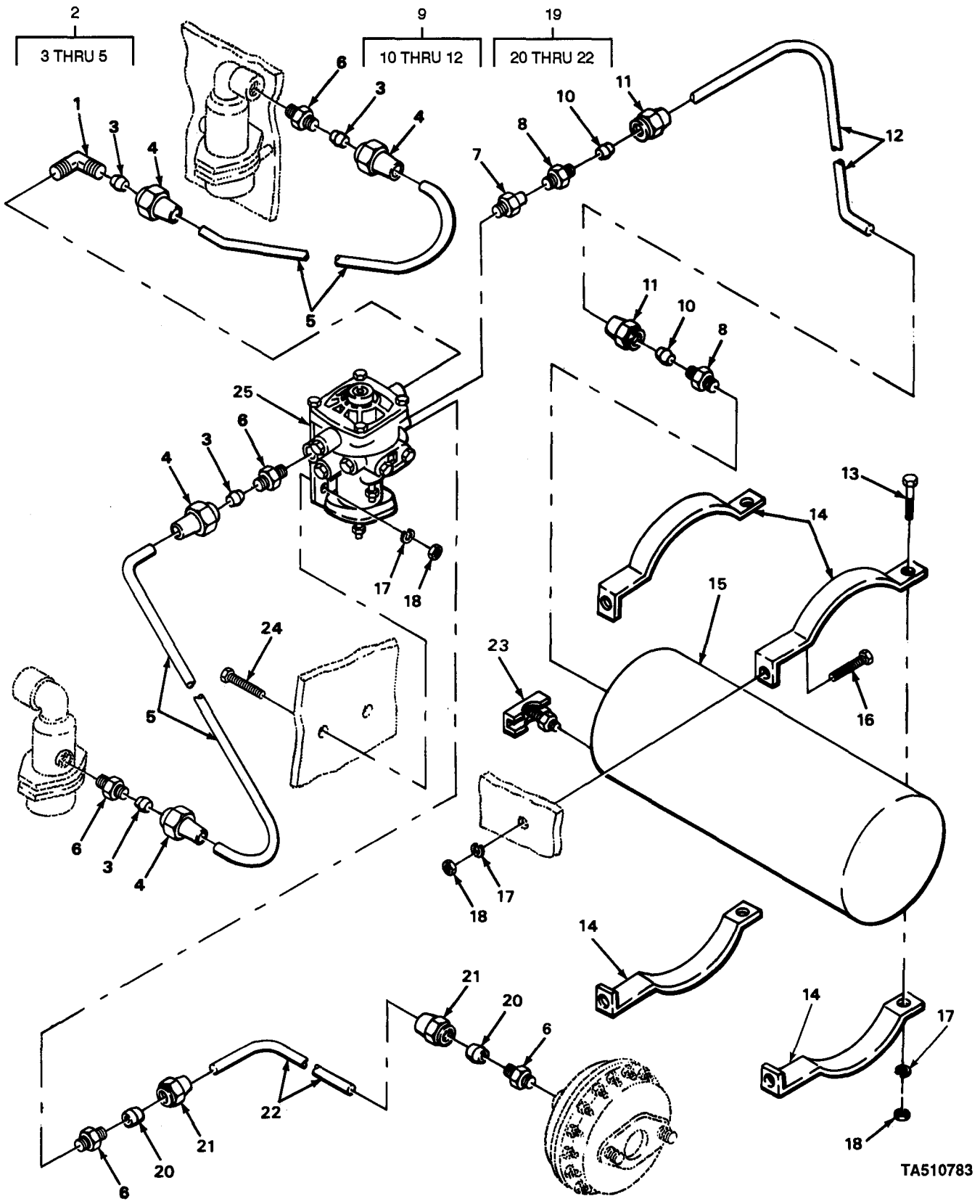

FIGURE 23. AIR TANK, EMERGENCY VALVE, LINES, AND FITTINGS.

(1) ITEM NO	(2) SMR CODE	(3) CAGEC	(4) PART NUMBER	(5) DESCRIPTION AND USABLE ON CODES (UOC)	(6) QTY
				GROUP 1208 AIRBRAKE SYSTEM	
				FIG. 23 AIR TANK, EMERGENCY VALVE, LINES, AND FITTINGS	
1	PAOZZ	81343	6-4 120202BA(LONG NUT)	ELBOW, PIPE TO TUBE	1
2	AOOOO	19207	8689208-1	TUBE ASSEMBLY	2
3	PAOZZ	16662	AC2511	.SLEEVE,COMPRESSION	2
4	PAOZZ	78550	200360	.NUT,TUBE COUPLING	2
5	MOOZZ	19207	2033172-18	.TUBE,COPPER MAKE FROM TUBE P/N 305087-0116	1
6	PAOZZ	81343	6-4 120102BA	ADAPTER,STRAIGHT,PI	1
7	PAOZZ	81343	6-4 120102BA	ADAPTER,STRAIGHT,PI	1
8	PAOZZ	40342	41X320	ADAPTER,STRAIGHT,PI	2
9	AOOOO	19207	8689210-1	TUBE ASSEMBLY	1
10	PAOZZ	81343	8 120115B	.SLEEVE,COMPRESSION	2
11	PAOZZ	81343	8 120111B	.NUT,TUBE COUPLING	2
12	MOOZZ	19207	2775529-60	.TUBE,COPPER MAKE FROM TUBE P/N 8689210	1
13	PAOZZ	96906	MS90728-78	SCREW,CAP,HEXAGON H	2
14	XD0ZZ	19207	7745288	CLAMP	4
15	PAOZZ	23705	A298748	TANK,PRESSURE	1
16	PAOZZ	96906	MS18154-58	SCREW,CAP,HEXAGON H	4
17	PAOZZ	16764	110730	WASHER,LOCK	8
18	PAOZZ	96906	MS51967-8	NUT,PLAIN,HEXAGON	8
19	AOOOO	19207	8689208-2	TUBE ASSEMBLY	1
20	PAOZZ	16662	AC2511	.SLEEVE,COMPRESSION	2
21	PAOZZ	78550	200360	.NUT,TUBE COUPLING	2
22	MOOZZ	19207	2033172-23	.TUBE,COPPER MAKE FROM TUBE P/N 305087-0116	1
23	PAOZZ	96906	MS35782-5	.COCK,DRAIN	1
24	PAOZZ	96906	MS90728-62	SCREW,CAP,HEXAGON H	2
25	PAOZZ	96906	MS53004-1	VALVE,RELAY,EMERGEN	1

END OF FIGURE

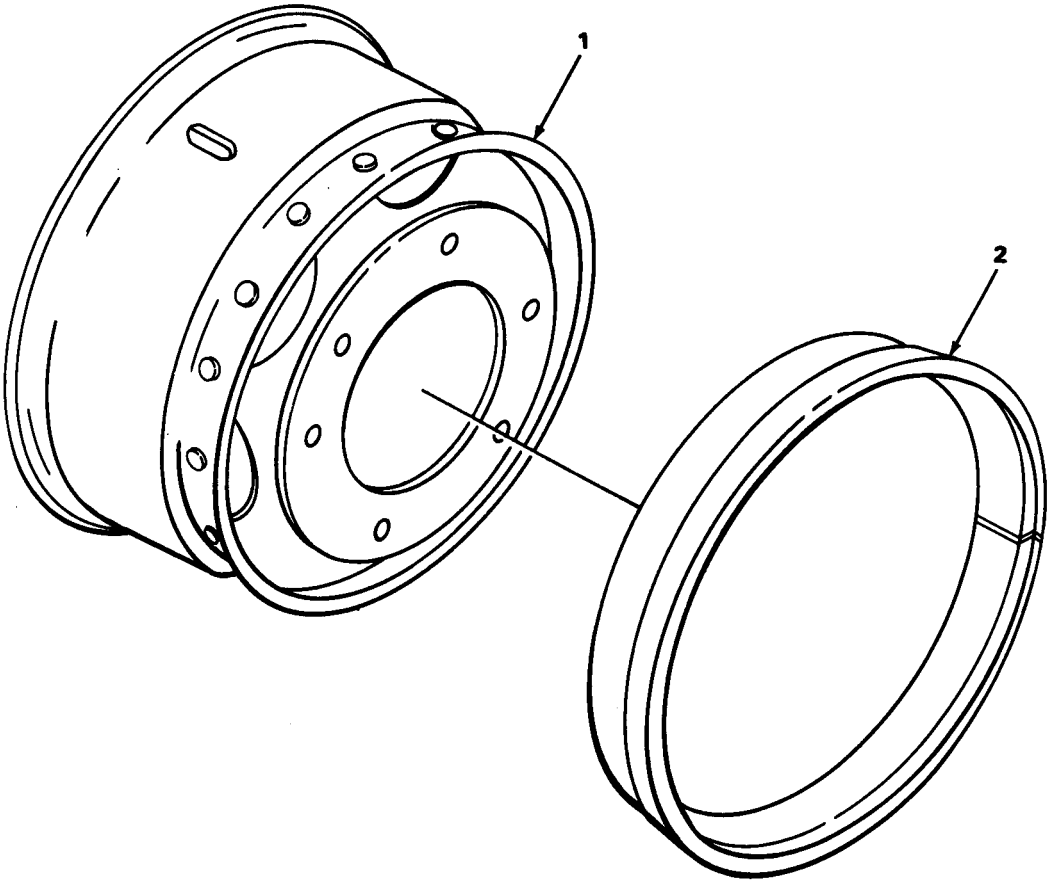

TA510784

FIGURE 24. TRAILER WHEELS.

(1) ITEM NO	(2) SMR CODE	(3) CAGEC	(4) PART NUMBER	(5) DESCRIPTION AND USABLE ON CODES (UOC)	(6) QTY
				GROUP 13 WHEELS AND TRACKS	
				GROUP 1311 WHEEL ASSEMBLY	
				FIG. 24 TRAILER WHEELS	
1	PAOZZ	09386	65890	WHEEL,PNEUMATIC TIR	4
2	PAOZZ	96906	MS53045-3	RING,SIDE,AUTOMOTIV	4
				END OF FIGURE	

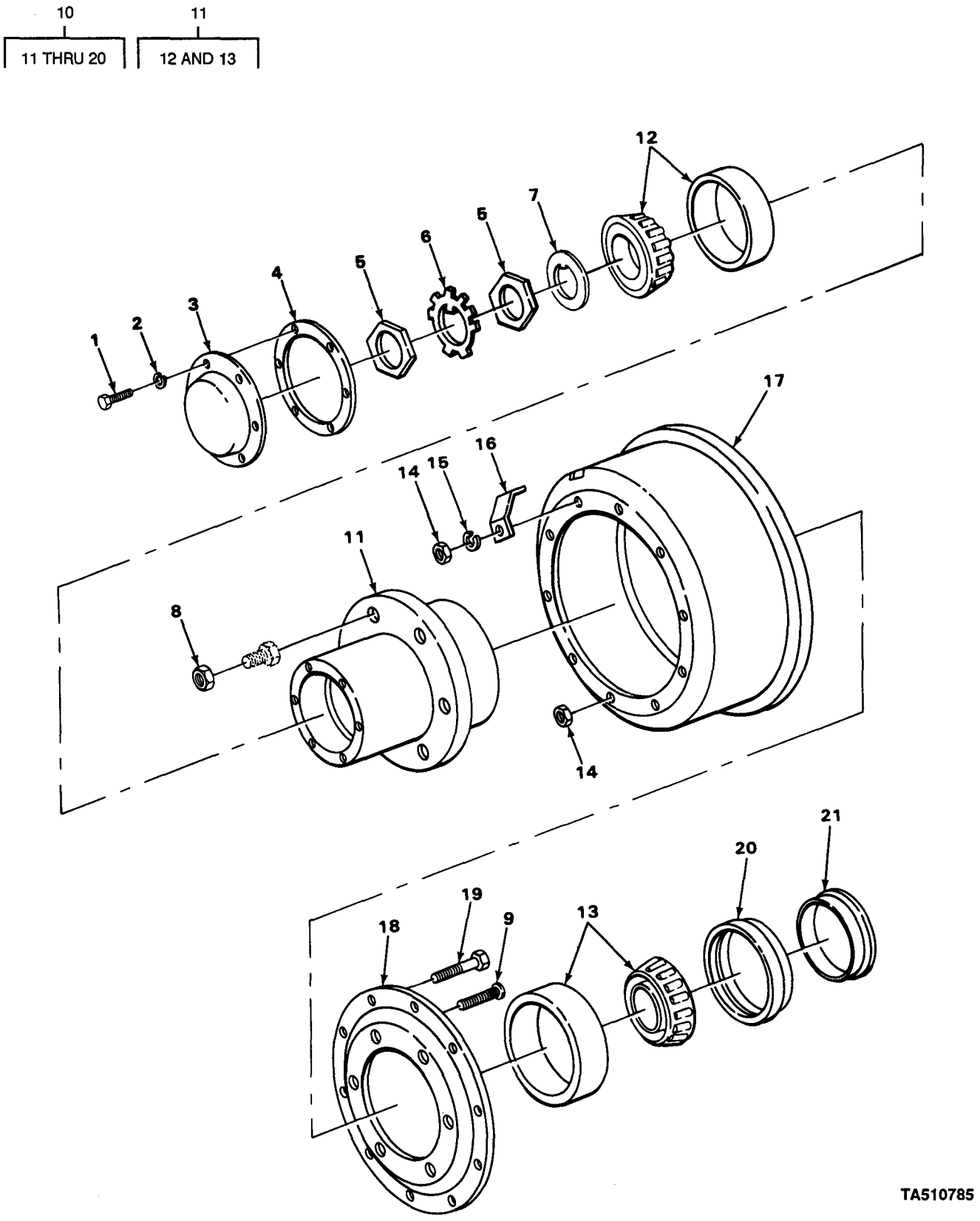

FIGURE 25. HUB AND BRAKEDRUM ASSEMBLIES.

(1) ITEM NO	(2) SMR CODE	(3) CAGEC	(4) PART NUMBER	(5) DESCRIPTION AND USABLE ON CODES (UOC)	(6) QTY
				GROUP 1311 WHEEL ASSEMBLY	
				FIG. 25 HUB AND BRAKEDRUM ASSEMBLIES	
1	PAOZZ	96906	MS90725-31	BOLT,MACHINE	12
2	PAOZZ	96906	MS35338-45	WASHER,LOCK	12
3	PAOZZ	19207	8710744	COVER PLATE, ACCESS	2
4	PAOZZ	19207	8710743	GASKET	2
5	PAOZZ	19207	10896720	NUT,PLAIN,HEXAGON	2
6	PAOZZ	78500	1229G969	WASHER,KEY	2
7	PAOZZ	78500	1229D862	WASHER,KEY	2
8	PAOZZ	96906	MS53068-1	NUT,CAP,DUAL WHEEL	6
8	PAOZZ	96906	MS53068-2	NUT,CAP,DUAL WHEEL	6
9	PAOZZ	96906	MS51946-1	BOLT,RIBBED SHOULDE	6
9	PAOZZ	96906	MS51946-2	BOLT,RIBBED SHOULDE	6
10	PBOZZ	71282	71244D	HUB AND DRUM ASSY LEFT	1
10	PAOZZ	19207	8710741	HUB AND DRUM ASSY RIGHT	1
11	PAOZZ	19207	8710736	.HUB,BODY	1
12	PAOZZ	96906	MS19081-112	..BEARING,ROLLER,TAPE	1
13	PAOZZ	21450	712288	..BEARING,ROLLER,TAPE	1
14	PAOZZ	96906	MS51922-45	.NUT,SELF-LOCKING,HE	10
15	PAOZZ	96906	MS35338-47	.WASHER LOCK	10
16	PAOZZ	78500	1107F84	.COVER,ACCESS	1
17	PAOFF	78500	3219X2052	.BRAKE DRUM SERVICE	1
18	PAOZZ	19207	8710742	.ADAPTER,BRAKE DRUM	1
19	PAOZZ	96906	MS90726-139	.SCREW,CAP,HEXAGON H	10
20	PAOZZ	19207	7979349	.SEAL, OIL, PLAIN HUB BEARING, BRAKE AND AXLE ASSEMBLIES	2
21	PAOZZ	78500	1199F1436	RING,WIPER	2
				END OF FIGURE	

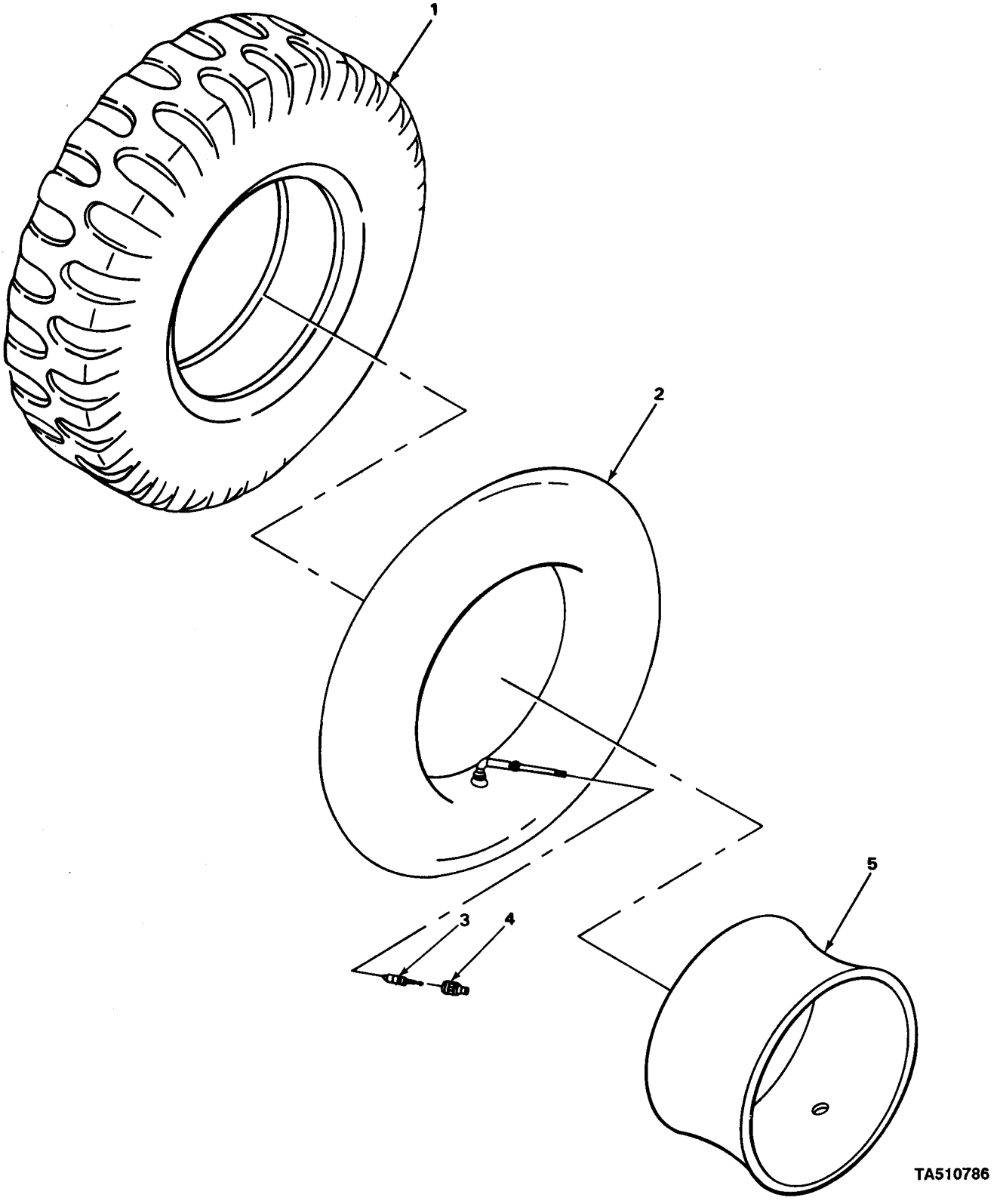

FIGURE 26. TIRES AND TUBES.

(1) ITEM NO	(2) SMR CODE	(3) CAGEC	(4) PART NUMBER	(5) DESCRIPTION AND USABLE ON CODES (UOC)	(6) QTY
				GROUP 1313 TIRES, TUBES, TIRE CHAINS	
				FIG. 26 TIRES AND TUBES	
1	PAOFF	81348	ZZ-T-381M/GROUP3 /9.00-20/D/TBCC	TIRE,PNEUMATIC W/FLAP INNER TUBE PNEUMATIC	5
2	PAOZZ	81348	ZZ-I-550/900-20/ TR175A/ONCTR	INNER TUBE,PNEUMATI TIRE TUBE AND WHEEL	5
3	PAOZZ	96906	MS51377-1	VALVE CORE	5
4	PAOZZ	34623	648487	CAP,PNEUMATIC VALVE	5
5	PAOZZ	73842	20N	FLAP,INNER TUBE,PNE	5
				END OF FIGURE	

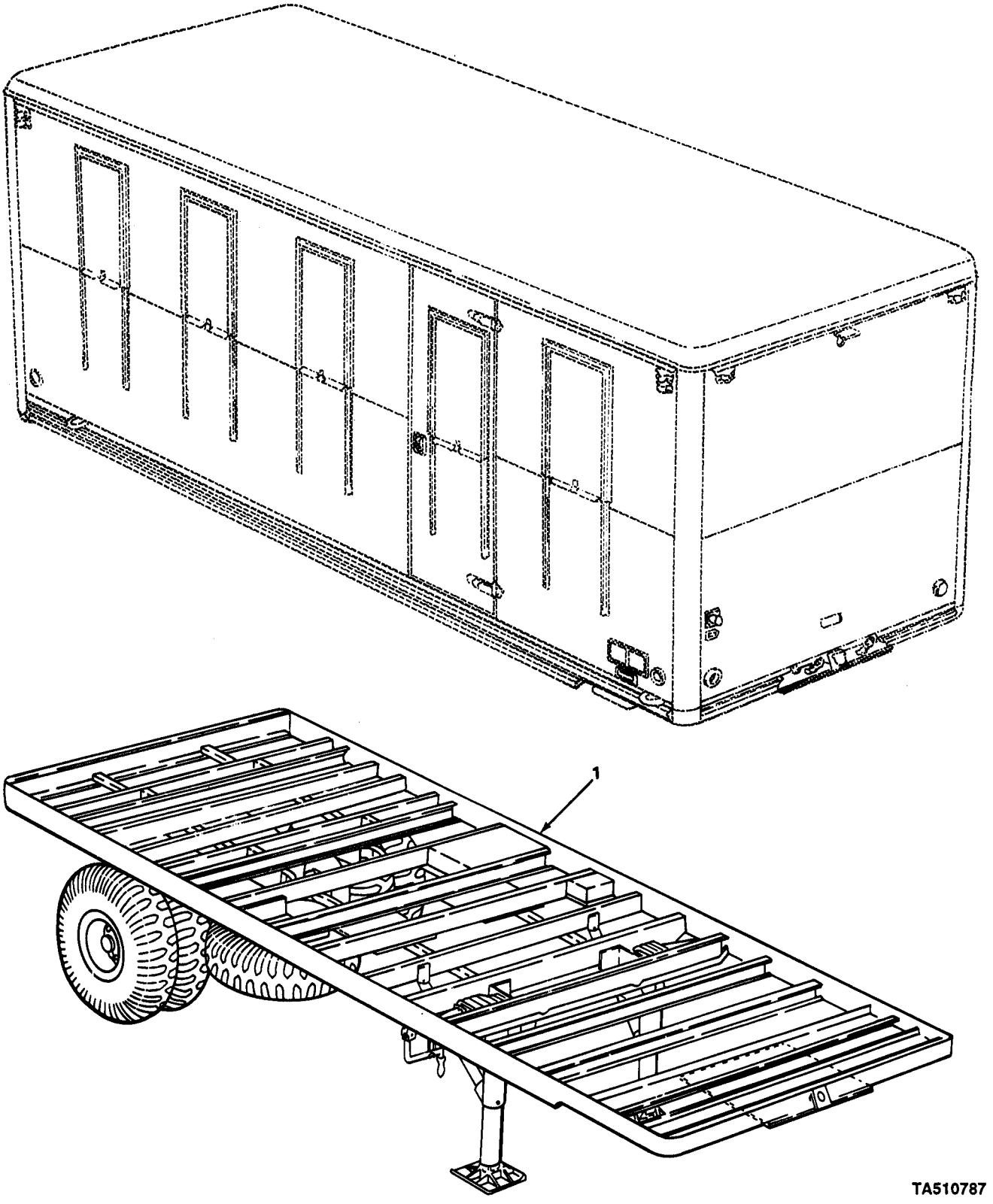

FIGURE 27. TRAILER FRAME.

(1) ITEM NO	(2) SMR CODE	(3) CAGEC	(4) PART NUMBER	(5) DESCRIPTION AND USABLE ON CODES (UOC)	(6) QTY
				GROUP 15 FRAME, TOWING ATTACHMENTS, DRAWBARS, AND ARTICULATION SYSTEMS	
				GROUP 1501 FRAME ASSEMBLY	
				FIG. 27 TRAILER FRAME	
1	XDFZZ	19207	10919601	FRAME ASSEMBLY	1
				END OF FIGURE	

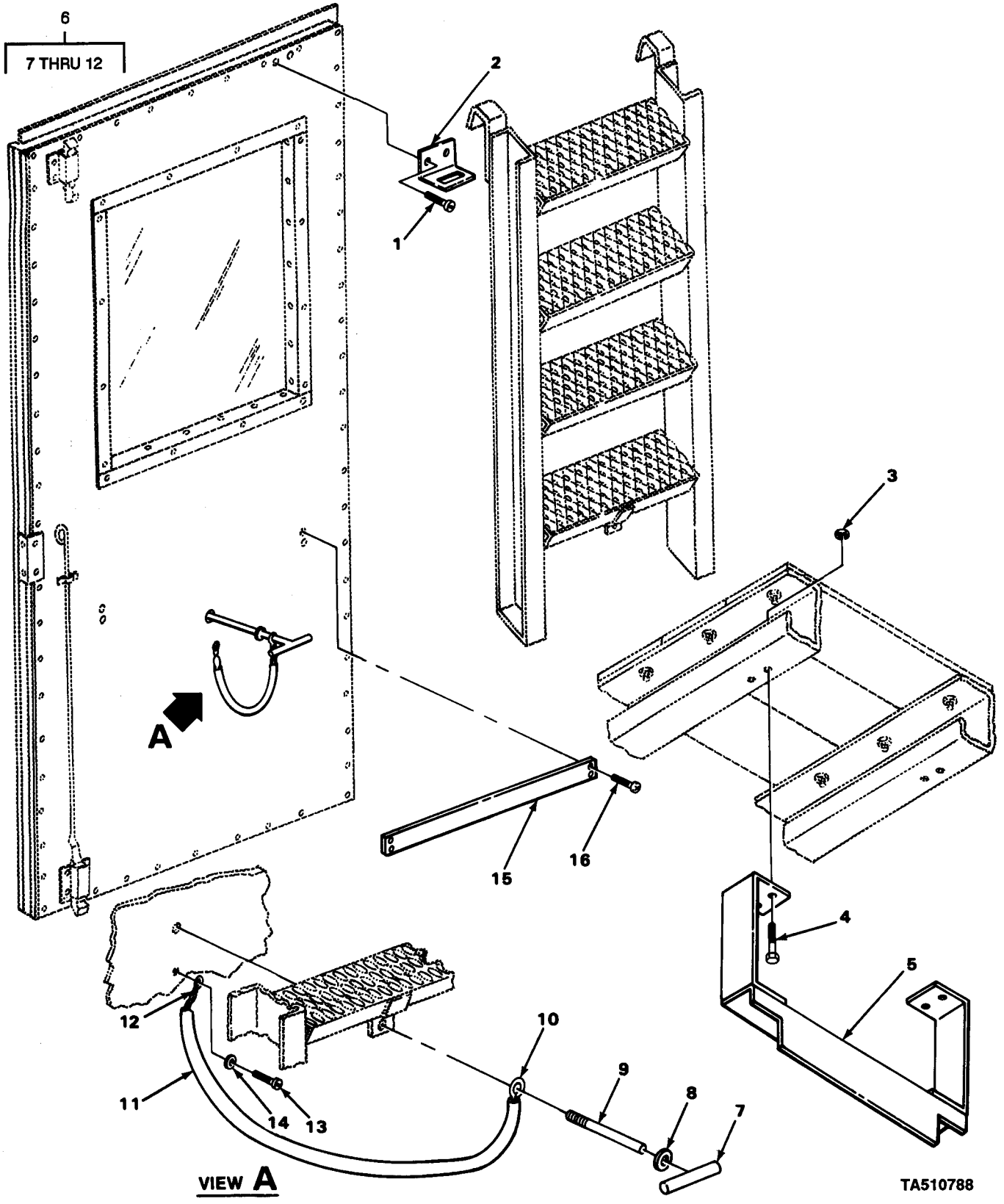

FIGURE 28. LADDER AND MOUNTING PARTS.

(1) ITEM NO	(2) SMR CODE	(3) CAGEC	(4) PART NUMBER	(5) DESCRIPTION AND USABLE ON CODES (UOC)	(6) QTY
				GROUP 1501 FRAME ASSEMBLY	
				FIG. 28 LADDER AND MOUNTING PARTS	
1	PAOZZ	96906	MS51861-69	SCREW,TAPPING,THREA	4
2	XDOZZ	19207	7034335	ANGLE INSIDE REAR DOOR LADDER MOUNT	2
3	PAOZZ	96906	MS51922-1	NUT,SELF-LOCKING,HE	4
4	PAOZZ	96906	MS90728-8	SCREW,CAP,HEXAGON H	4
5	XDOZZ	19207	7034025	ANGLE TRAILER BOTTOM LADDER MOUNT	1
6	PAOOO	19207	7034027	STUD,TURNLOCK FASTE USED ON MOUNT UNDERNEATH TRAILER	1
7	XAOZZ	19207	7034425	.HANDLE	1
8	PAOZZ	96906	MS27183-15	.WASHER,FLAT	1
9	XAOZZ	19207	7034026	.STUD USED WITH P/N 7034027	1
9	XAOZZ	19207	7034424	.ROD USED WITH P/N 7034427	1
10	PAOZZ	19207	506882	.HOOK,CHAIN,S	1
11	XDOZZ	19207	10919666	.COVER,CHAIN USED WITH P/N 7034427	1
12	XDOZZ	19207	42-C-15120-210	.CHAIN	1
13	PFOZZ	96906	MS24621-15	SCREW,TAPPING,THREA	1
14	PFOZZ	96906	MS27183-6	WASHER,FLAT	1
15	XBOZZ	19207	10919621	WEAR PLATE	1
16	PAOZZ	96906	MS51861-37	SCREW,TAPPING,THREA	4

END OF FIGURE

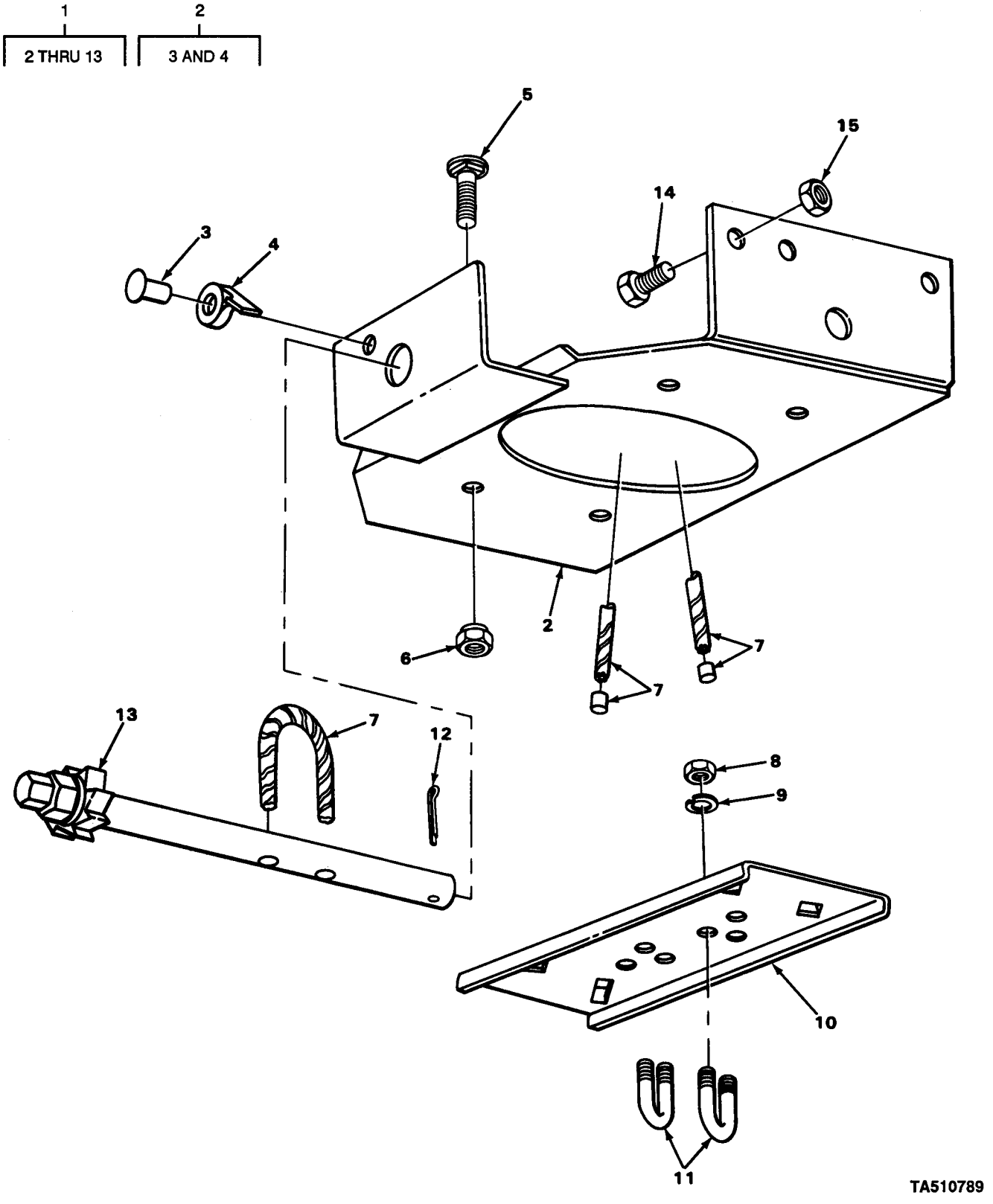

FIGURE 29. TIRE CARRIER.

(1) ITEM NO	(2) SMR CODE	(3) CAGEC	(4) PART NUMBER	(5) DESCRIPTION AND USABLE ON CODES (UOC)	(6) QTY
				GROUP 1504 SPARE WHEEL CARRIER AND TIRE LOCK	
				FIG. 29 TIRE CARRIER	
1	XDOOO	19207	10922114	TIRE CARRIER	1
2	XDOOO	19207	10922113	.FRAME,MAIN	1
3	PAOZZ	81829	T40	..RIVET,SOLID	1
4	PAOZZ	81216	T39	..PAWL	1
5	PAOZZ	19207	7418891	.BOLT, SQUARE NEXK	4
6	PAOZZ	19207	7418892	.NUT,PLAIN,HEXAGON	4
7	PAOZZ	19207	7739705	.ROPE,WIRE	1
8	PAOZZ	96906	MS35691-1	.NUT,PLAIN,HEXAGON	4
9	PAOZZ	96906	MS35338-44	.WASHER,LOCK	1
10	PAOZZ	19207	7739707	.RETAINER,PLATE SPAR	1
11	PAOZZ	19207	7739666	.BOLT,U	2
12	PAOZZ	96906	MS24665-495	.PIN,COTTER	1
13	PAOZZ	19207	7739703	.GEARSHAFT,SPUR	1
14	PAOZZ	96906	MS90727-161	SCREW,CAP,HEXAGON H	4
15	PAOZZ	96906	MS21045-10	NUT,SELF-LOCKING,HE	4

END OF FIGURE

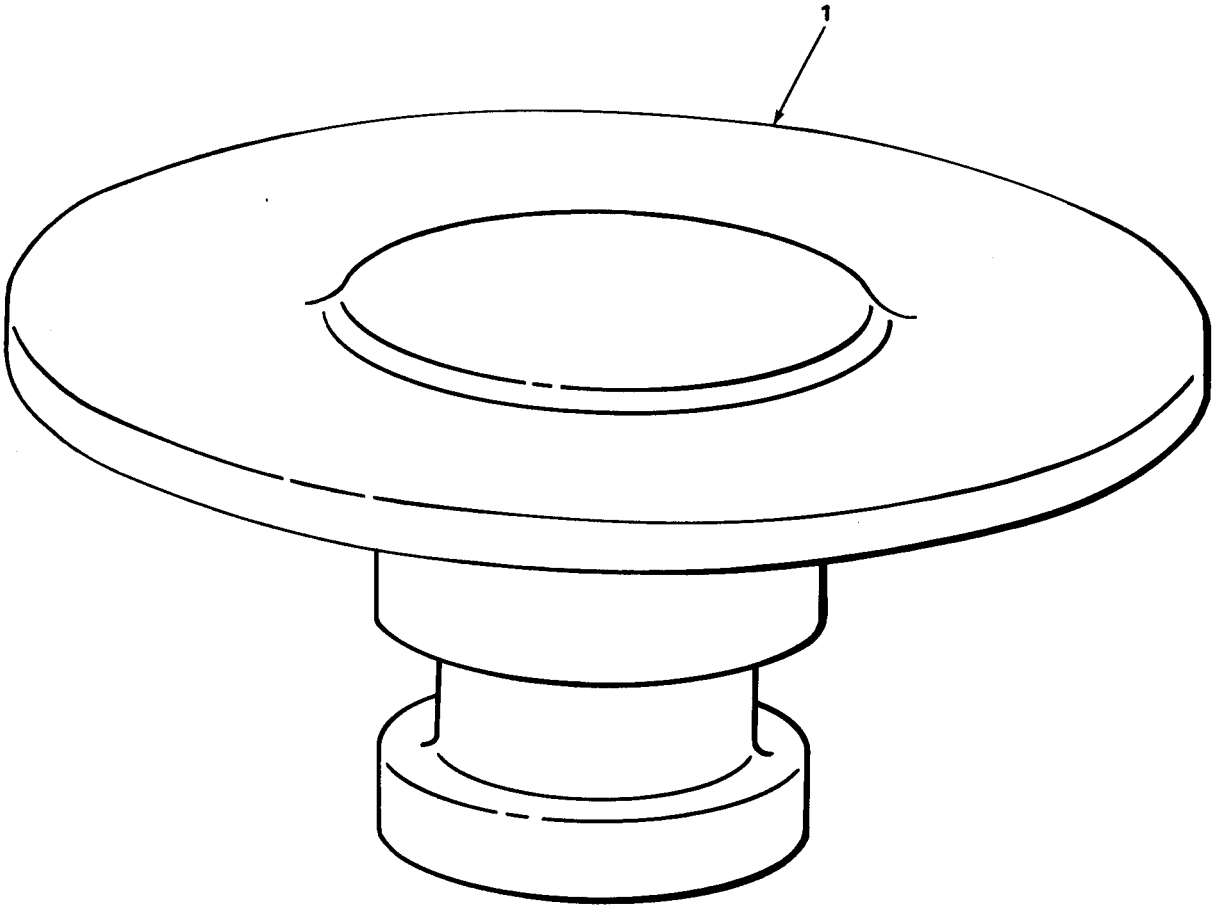

TA510790

FIGURE 30. KINGPIN.

(1) ITEM NO	(2) SMR CODE	(3) CAGEC	(4) PART NUMBER	(5) DESCRIPTION AND USABLE ON CODES (UOC)	(6) QTY
				GROUP 1506 FIFTH WHEEL	
				FIG. 30 KINGPIN	
1	PAHZZ	19207	7067973	KINGPIN,FIFTH WHEEL	1
				END OF FIGURE	

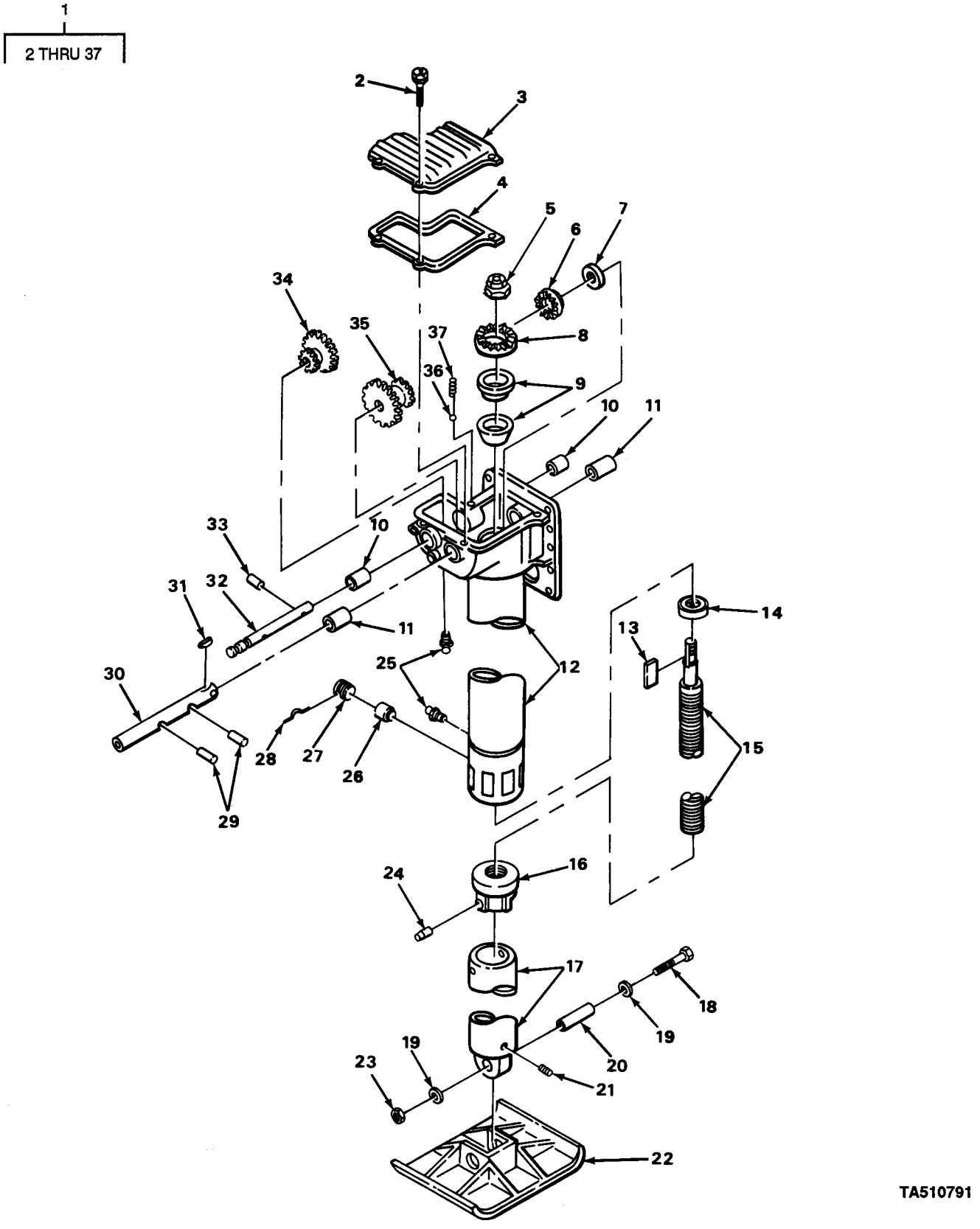

FIGURE 31. LANDING GEAR.

(1) ITEM NO	(2) SMR CODE	(3) CAGEC	(4) PART NUMBER	(5) DESCRIPTION AND USABLE ON CODES (UOC)	(6) QTY
				GROUP 1507 LANDING GEAR, LEVELING JACKS	
				FIG. 31 LANDING GEAR	
1	PAFFF	80837	R1556	LEG,SEMITRAILER RET RIGHT	1
1	PAFFF	80837	L1540	LEG,SEMITRAILER RET LEFT	1
2	PFFZZ	19207	593599	.SCREW,ASSEMBLED WAS	1
3	PAFZZ	19207	7974887	.COVER,ACCESS	1
4	PAFZZ	80837	J3203G	.GASKET GEAR BOX COVER	1
5	XDFZZ	19207	8738007	.NUT,SELF-LOCKING	1
6	PAFZZ	80837	J344-1F	.GEAR,BEVEL	1
7	PAFZZ	66640	27D252	.WASHER,FLAT	1
8	PAFZZ	19207	8379855	.GEAR,BEVEL LANDING GEAR ASSEMBLY	1
9	PAFZZ	66821	K12528	.BEARING,ROLLER,TAPE	1
10	PAFZZ	19207	542044	.BEARING,SLEEVE	2
11	PAFZZ	19207	8379857	.BEARING,SLEEVE	2
12	XDFZZ	19207	7015115	.LEG RIGHT USE WITH P/N R1556	1
12	XDFZZ	19207	7015116	.LEG LEFT USE WITH P/N L1540	1
13	PAFZZ	80837	J3237	.KEY,MACHINE BEVEL GEAR, LANDING GEAR ASSY	1
14	PAFZZ	96906	MS17169-12	.BEARING,ROLLER,THRU	1
15	PAFZZ	19207	8720978	.SCREW,LANDING GEAR	1
16	PAFZZ	80837	J3265	.NUT,SLEEVE RETRACTABLE LANDING GEAR	1
17	PAFZZ	80837	J3269-13	.LEG,SEMITRAILER RET LANDING GEAR, LOWER,ASSY	1
18	PAOZZ	96906	MS90728-125	.SCREW,CAP,HEXAGON H	1
19	PAOZZ	96906	MS27183-19	.WASHER	2
20	PAOZZ	19207	7365938	.PIN,LANDING GEAR WH	1
21	PAOZZ	66640	9112001	.PLUG,PIPE	2
22	PAOZZ	80837	J1386	.SHOE,JACK SUPPORT	1
23	PAOZZ	96906	MS51922-33	.NUT, SELF-LOCKING, HE	1
24	PAFZZ	19207	8376596	.PIN,SHOULDER,	2
25	PAOZZ	96906	MS15003-1	.FITTING	3
26	PAFZZ	80837	J-1276	.GIB,LEVELING	1
27	PAFZZ	80837	J1206A	.PLUG,MACHINE THREAD	1
28	PAFZZ	80837	J3288	.CLIP,SPRING TENSION	1
29	PAFZZ	61038	M21872	.PIN,GROOVED,HEADLES	2
30	PAFZZ	80837	J-3207-1	.SHAFT	1
31	PAFZZ	96906	MS35756-15	.KEY,WOODRUFF	1
32	PFZZ	80837	J3206	.SHAFT,STRAIGHT HAND RATCHET, LANDING GEAR ASSEMBLY	1
33	PAFZZ	96906	MS35671-64	.PIN,GROOVED,HEADLES	2
34	PAFZZ	19207	8376611	.GEAR CLUSTER	1
35	PAFZZ	19207	8376610	.GEAR CLUSTER SPUR RIGID SET, LANDING GEAR ASSEMBLY	1
36	PAFZZ	96906	MS19059-1019	.BALL,.BEARING	1
37	PAFZZ	80837	J3205	.SPRING,HELICAL RACHET SHAFT, LANDING GEAR ASSEMBLY	1
				END OF FIGURE	

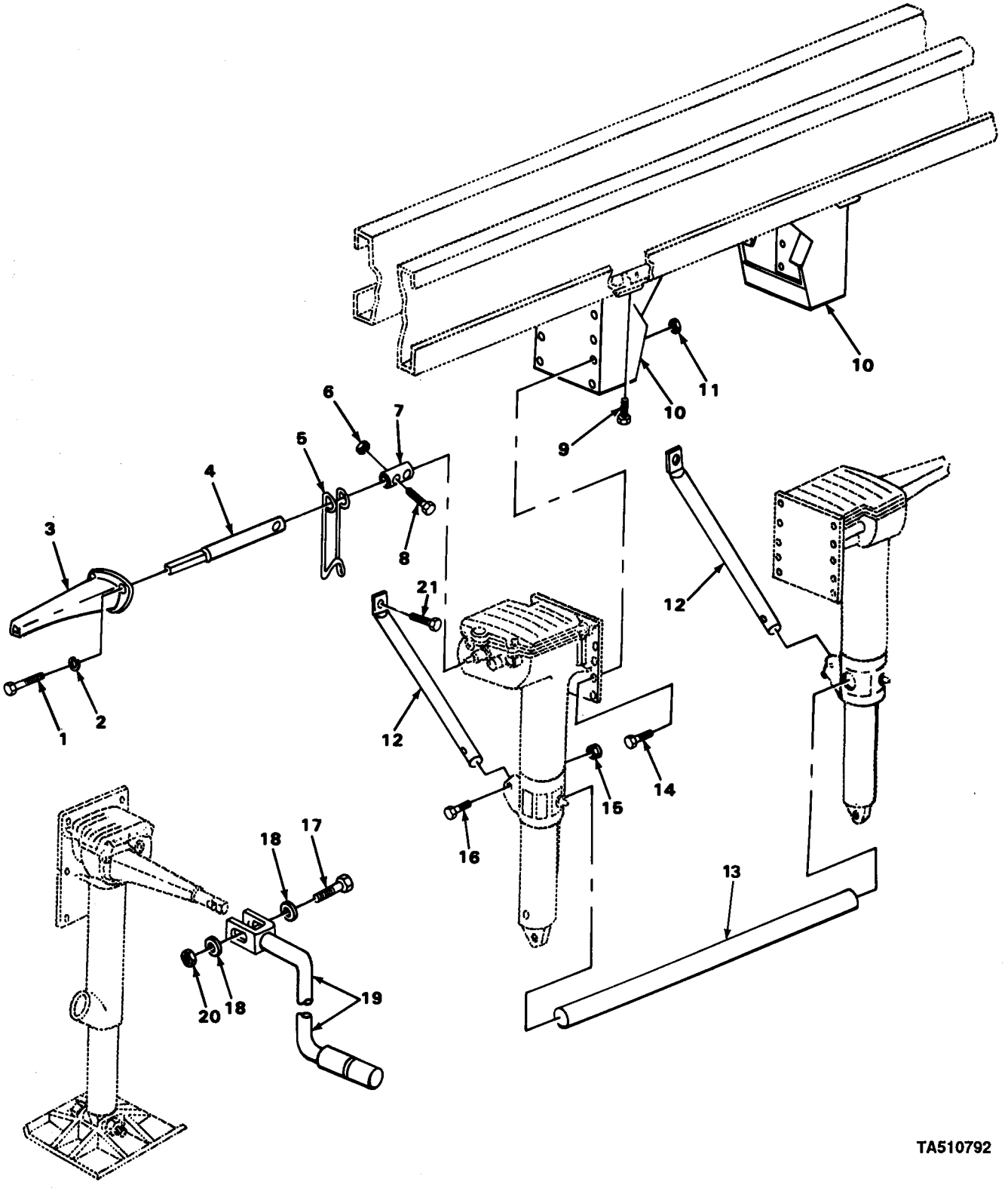

FIGURE 32. LANDING LEGS, BRACE, AND RELATED PARTS.

(1) ITEM NO	(2) SMR CODE	(3) CAGEC	(4) PART NUMBER	(5) DESCRIPTION AND USABLE ON CODES (UOC)	(6) QTY
				GROUP 1507 LANDING GEAR, LEVELING JACKS	
				FIG. 32 LANDING LEGS, BRACE, AND RELATED PARTS	
1	XDFZZ	96906	MS90726-111	SCREW,CAP,HEXAGON H	6
2	PAFZZ	96906	MS35338-48	WASHER,LOCK	6
3	PFFZZ	19207	8380975	BRACKET	2
4	XDFZZ	19207	7017306	SHAFT EXTENSION	2
5	XDFZZ	19207	8380973	HOLDER,CRANK	2
6	PAFZZ	96906	MS35692-17	NUT,PLAIN,SLOTTED,H	4
7	XDFZZ	19207	7014984	COUPLING,SHAFT,RIGI	2
8	PAFZZ	96906	MS90728-65	SCREW,CAP,HEXAGON H	4
9	PAFZZ	96906	MS90728-189	SCREW,CAP,HEXAGON H	8
10	XDFZZ	19207	7034387-1	MOUNTING PLATE	2
11	PAFZZ	96906	MS21044N8	NUT,SEFL-LOCKING,HE	18
12	XDOZZ	19207	10919626-1	BRACE ASSEMBLY	2
13	XDFZZ	19207	7034431	BRACE	1
14	PAOZZ	96906	MS90726-113	SCREW,CAP,HEXAGON H	18
15	PAOZZ	96906	MS51922-49	NUT,SELF-LOCKING,HE	2
16	XDOZZ	96906	MS90725-170	SCREW,CAP,HEXAGON H	2
17	PAOZZ	96906	MS90725-67	SCREW,CAP,HEXAGON H	2
18	PAOZZ	96906	MS27183-14	WASHER,FLAT	4
19	PAOZZ	19207	11640134	CRANK,HAND	2
20	PAOZZ	96906	MS51922-17	NUT,SELF-LOCKING,HE	2
21	PAOZZ	96906	MS90727-163	SCREW,CAP,HEXAGON H	2

END OF FIGURE

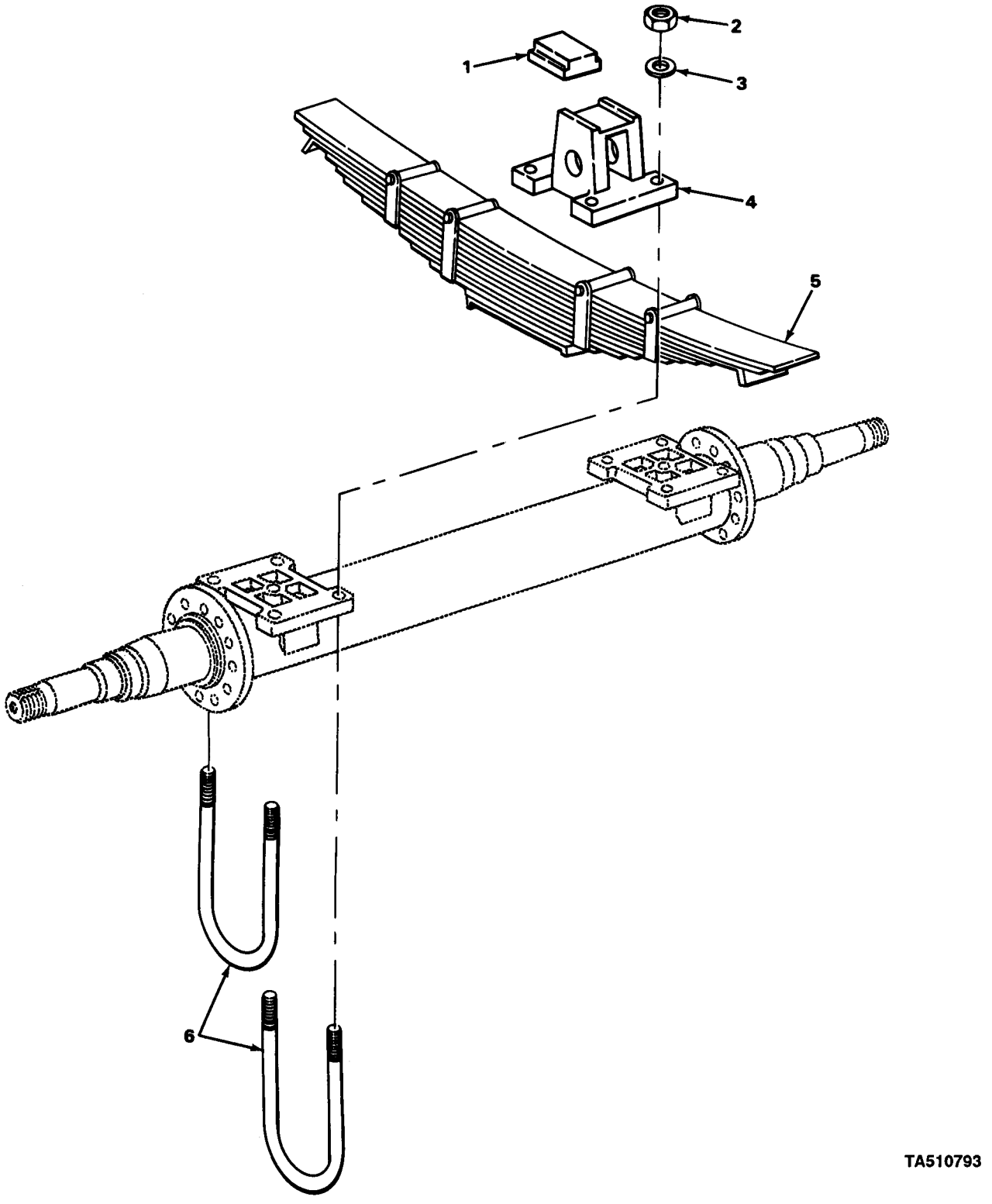

FIGURE 33. TRAILER SUSPENSION SPRING.

(1) ITEM NO	(2) SMR CODE	(3) CAGEC	(4) PART NUMBER	(5) DESCRIPTION AND USABLE ON CODES (UOC)	(6) QTY
				GROUP 16 SPRINGS AND SHOCK ABSORBERS	
				GROUP 1601 SPRINGS	
				FIG. 33 TRAILERS SUSPENSION SPRING	
1	PAFZZ	19207	7974918	BUMPER,NONMETALLIC SPRING SUSPENSION ASSEMBLY	2
2	PAFZZ	19207	7979366	NUT,PLAIN,HEXAGON	8
3	PAFZZ	96906	MS27183-27	WASHER,FLAT	8
4	XDFZZ	19207	8742682	BRACKET	2
5	PAFFF	23705	336837	SPRING ASSEMBLY,LEA SPRING SUSPENSION ASSEMBLY	2
6	PFFZZ	19207	8742862	BOLT,U SPRING, ASSEMBLY	4
				END OF FIGURE	

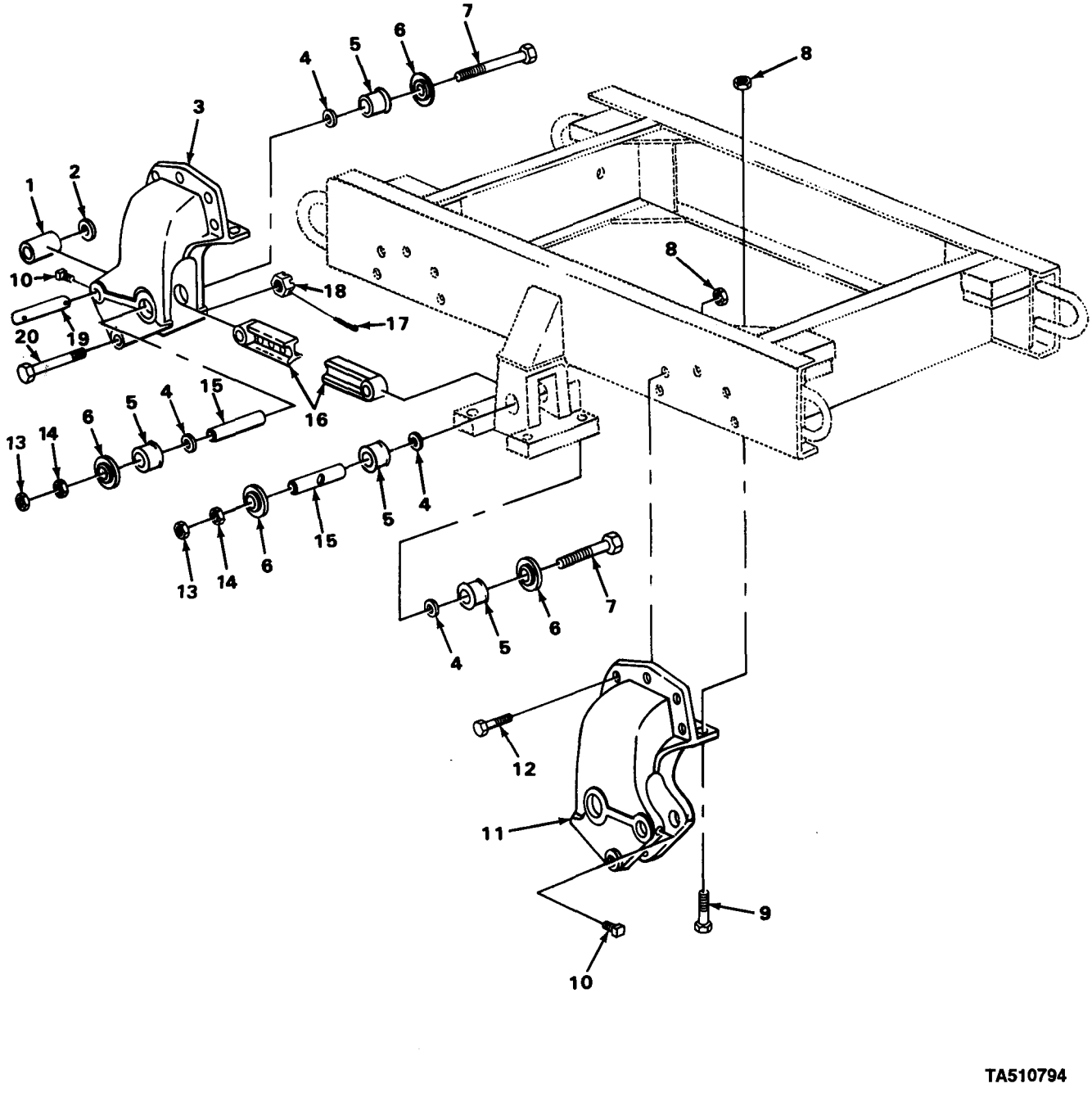

FIGURE 34. SUSPENSION SPRING MOUNTING BRACKETS.

(1) ITEM NO	(2) SMR CODE	(3) CAGEC	(4) PART NUMBER	(5) DESCRIPTION AND USABLE ON CODES (UOC)	(6) QTY
				GROUP 1605 TORQUE, RADIUS, AND STABILIZER RODS	
				FIG. 34 SUSPENSION SPRING MOUNTING BRACKETS	
1	XDOZZ	23705	565222	BEARING ASSEMBLY	4
2	PAFZZ	19207	7974921	WASHER,FLAT	8
3	PAFZZ	19207	8737000	HOLDER,SPRING	2
4	PAFZZ	19207	7349029	WASHER,FALT RADIUS ROD SPINDLE BUSHING,INNER	12
5	PAFZZ	23705	563400	BUSHING,NONMETALLIC RADIUS ROD SPINDLE	12
6	PAFZZ	19207	7349028	WASHER,SHOULDERED	12
7	XDFZZ	96906	MS90726-178	SCREW,CAP,HEXGON H	6
8	PAFZZ	96906	MS21044N8	NUT,SELF-LOCKING,HE	32
9	PAFZZ	96906	MS90726-113	SCREW,CAP,HEXAGON H	8
10	XDFZZ	81348	102950	SETSCREW	8
11	PAFZZ	19207	8737001	HOLDER,SPRING	2
12	XDFZZ	96906	MS90726-111	SCREW,CAP,HEXAGON H	24
13	PAFZZ	96906	MS51968-20	NUT PLAIN HEX RADIUS ROD BUSHING	6
14	PAFZZ	96906	MS27151-28	NUT,STAMPED	6
15	PAFZZ	19207	7974917	BUSHING,SLEEVE RADIUS ROD SPINDLE	6
16	PAFZZ	19207	7707070	ROD,ALIGNING,VEHICU RADIUS ROADSIDE	1
16	PAFZZ	19207	7520513	ROD ASSEMBLY RADIUS CURBSIDE	1
17	PAFZZ	96906	MS24665-357	PIN,COTTER	4
18	PAFZZ	96906	MS35692-53	NUT,PLAIN,SLOTTED,H	4
19	PAFZZ	19207	7974919	PIN,STRAIGHT, SPRING SUSPENSION ASSEMBLY	4
20	PAFZZ	19207	8742683	BOLT,MAHCINE SPRING SUSPENSION ASSEMBLY	4
				END OF FIGURE	

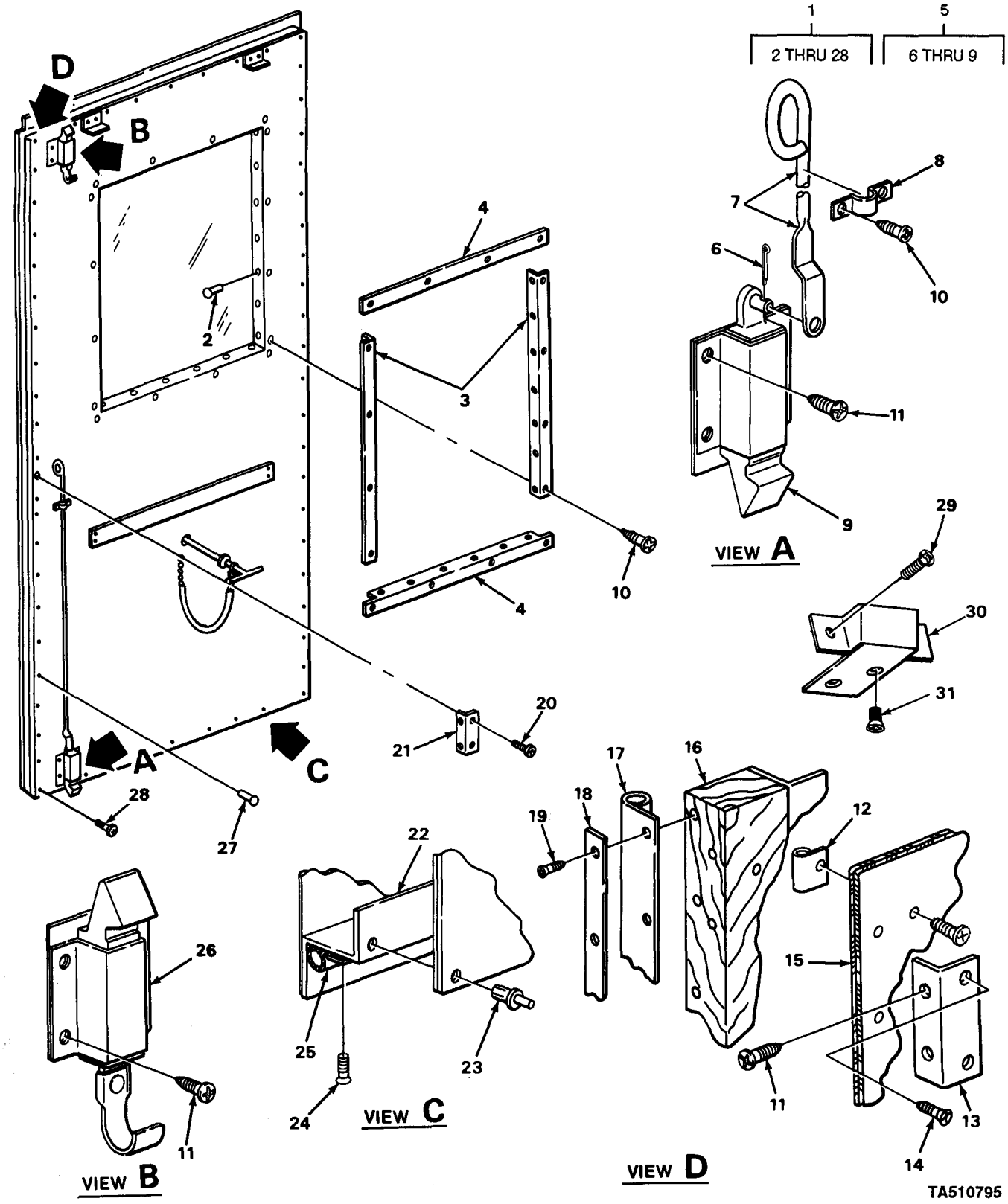

FIGURE 35. REAR LEFT TRAILER DOOR.

(1) ITEM NO	(2) SMR CODE	(3) CAGEC	(4) PART NUMBER	(5) DESCRIPTION AND USABLE ON CODES (UOC)	(6) QTY
				GROUP 18 BODY, CAB, HOOD, AND HULL	
				GROUP 1801 BODY, CAB, HOOD, AND HULL ASSEMBLIES	
				FIG 35 REAR LEFT TRAILER DOOR	
1	XDOFF	19207	7034385	DOOR ASSEMBLY,REAR LEFT HAND	1
2	PAFZZ	96906	MS24662-152	.RIVET,BLIND	26
3	XDFZZ	19207	7096946	.FRAME WINDOW, SIDES	2
4	XDFZZ	19207	7096945	.FRAME WINDOW, TOP AND BOTTOM	2
5	PAFZZ	19207	7264735	.LATCH, DOOR, VEHICULA	1
6	PAFZZ	96906	MS24665-134	..PIN,COTTER	1
7	XDFZZ	19207	10871578	..CONTROL ROD	1
8	PAFZZ	19207	7264634	..STRAP,RETAINING	1
9	PAFZZ	19220	5607-51	..LATCH,RIM	1
10	PAFZZ	96906	MS51861-47	.SCREW,TAPPING,THREA	20
11	PAFZZ	96906	MS24629-61	.SCREW,TAPPING,THREA	8
12	XDFZZ	19207	10919681-34	.WEATHERSTRIP	1
13	XDFZZ	19207	10919691	.ZEE	1
14	PFFZZ	96906	MS24617-55	.SCREW,TAPPING,THREA	4
15	XDFZZ	19207	7034417	.PANEL,DOOR	1
16	XDFZZ	19207	7034414	.BLOCK,WOOD	1
17	XBFZZ	19207	10919698	.WEATHERSTRIP	1
18	XDFZZ	19207	10919684	.RETAINER, WEATHER STRIP	1
19	XDFZZ	96906	MS24615-26	.SCREW,TAPPING,THREA	24
20	PFFZZ	96906	MS51862-37	.SCREW,TAPPING,THREA	4
21	XDFZZ	19207	10919597	.PLATE	1
22	XDFZZ	19207	10919701	.RETAINER	1
23	PAFZZ	96906	MS20470D6-8	.RIVET,SOLID	19
24	PAFZZ	96906	MS51862-25	.SCREW,TAPPING,THREA	11
25	XDFZZ	19207	10919697	.WEATHER STRIP	1
26	PAFZZ	19207	7264736	.LATCH,RIM	1
27	XDFZZ	96906	MS24662-154	.RIVET,BLIND	42
28	PAFZZ	96906	MS35493-78	.SCREW,WOOD	36

END OF FIGURE

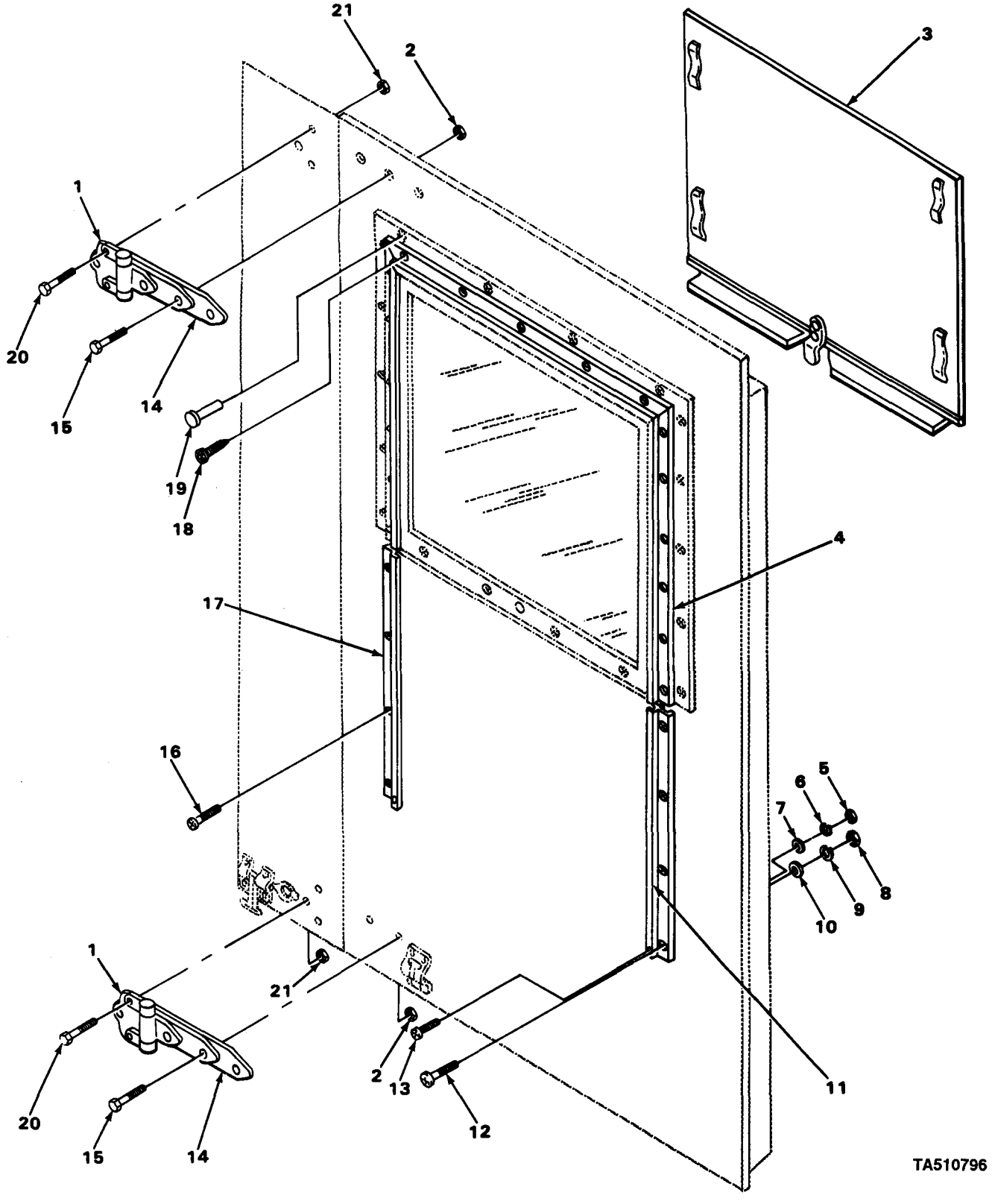

FIGURE 36. REAR LEFT DOOR (EXTERIOR VIEW).

(1) ITEM NO	(2) SMR CODE	(3) CAGEC	(4) PART NUMBER	(5) DESCRIPTION AND USABLE ON CODES (UOC)	(6) QTY
				GROUP 1801 BODY, CAB, HOOD, AND HULL ASSEMBLIES	
				FIG. 36 REAR LEFT DOOR (EXTERIOR VIEW)	
1	XDFZZ	19207	7003081	.HINGE	2
2	PAFZZ	96906	MS51922-9	.NUT,SELF-LOCKING	6
3	PAFZZ	19207	8328353	.PANEL ASSEMBLY	1
4	XDFZZ	19207	7092397	.SASH ASSEMBLY	1
5	PAFZZ	96906	MS35649-282	.NUT,PLAIN,HEXAGON	2
6	PAFZZ	96906	MS35335-31	.WASHER,LOCK	2
7	PAFZZ	96906	MS27183-7	.WASHER,FLAT	2
8	PAFZZ	96906	MS35650-302	.NUT,PLAIN,HEXAGON	8
9	PAFZZ	96906	MS35335-32	.WASHER,LOCK	8
10	PAFZZ	96906	MS27183-8	.WASHER,FLAT	8
11	PAFZZ	19207	7092451	.STRUCTURAL SECTION,	1
12	PAFZZ	96906	MS35207-265	.SCREW,MACHINE	8
13	PAFZZ	96906	MS35206-250	.SCREW,MACHINE	2
14	XDFZZ	19207	7034353	.SPACERS	4
15	PAFZZ	96906	MS90725-36	.BOLT,MACHINE	6
16	XDFZZ	96906	MS24619-25	.SCREW,TAPPING,THREA	4
17	PAFZZ	19207	7092452	.GUIDE,PANEL	1
18	XDFZZ	96906	MS24621-45	.SCREW,TAPPING,THREA	14
19	PAFZZ	96906	MS20426D6-7	.RIVET,SOLID	58
20	PADZZ	96906	MS90725-36	BOLT,MACHINE	12
21	PAOZZ	96906	MS51922-9	NUT,SELF-LOCKING, HE	12
22	PAOZZ	96906	MS51861-47	SCREW,TAPPING,THREA	2
23	XDOZZ	19207	10919596	STRIKE PLATE REAR LEFT DOOR	1
24	PAOZZ	96906	MS24615-38	SCREW,TAPPING,THREA	2

END OF FIGURE

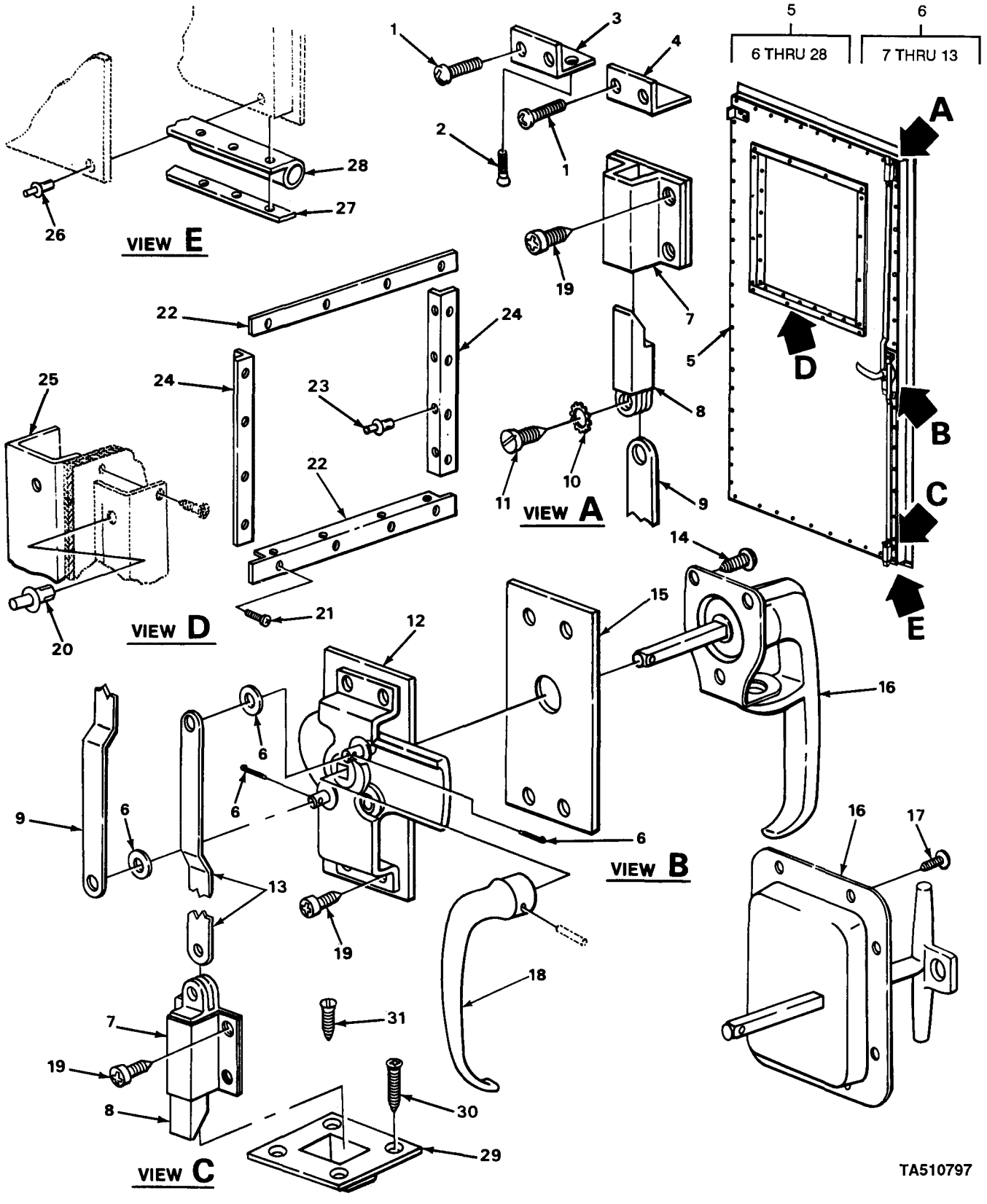

FIGURE 37. REAR RIGHT DOOR AND CURBSIDE DOOR (INTERIOR VIEW).

(1) ITEM NO	(2) SMR CODE	(3) CAGEC	(4) PART NUMBER	(5) DESCRIPTION AND USABLE ON CODES (UOC)	(6) QTY
				GROUP 1801 BODY, CAB, HOOD, AND HULL ASSEMBLIES	
				FIG. 37 REAR RIGHT DOOR AND CURBSIDE DOOR (INTERIOR VIEW)	
1	PAOZZ	96906	MS24615-38	SCREW,TAPPING,THREA	4
2	PAOZZ	96906	MS51861-49	SCREW,TAPPING,THREA	2
3	XDOZZ	19207	10919593	STRIKER PLATE	1
4	XDOZZ	19207	8722815	DOOR PLATE	1
5	PFOFF	19207	7034278	DOOR ASSEMBLY,CURB	1
5	PFOFF	19207	7034352	DOOR ASSEMBLY,REAR RIGHT	1
6	PFFFF	19207	7010222	.LOCK SET,RIM	1
7	PFFZZ	19207	8698438	..BRACKET,MOUNTING	2
8	PAFZZ	19220	5658-1	..BOLT,LOCKING	2
9	XDFZZ	19207	7015126	..STRAP	1
10	PFFZZ	96906	MS35335-33	..WASHER,LOCK	2
11	PAFZZ	96906	MS35223-73	..SCREW,MACHINE	2
12	XDFZZ	19207	7015127	..CASE	1
13	XDFZZ	19207	10919568	..STRAP	1
14	PAFZZ	96906	MS24629-50	.SCREW,TAPPING,THREA USE WITH P/N 10919677	3
15	PAFZZ	19207	7096954	.SPACER,PLATE	1
16	PFFZZ	19207	10919677	.HANDLE,DOOR OUTER REAR DOOR USE WITH P/N 7034352	1
16	PFFZZ	19207	7034006	.HANDLE,DOOR CURBSIDE DOOR USE WITH P/N 7034278	1
17	PAFZZ	96906	MS24629-46	.SCREW,TAPPING,THREA USE WITH P/N 7034006	7
18	PFOZZ	19207	8328279	.HANDLE, DOOR INSIDE	1
19	PAFZZ	96906	MS24629-61	.SCREW,TAPPING,THREA	12
20	XDFZZ	96906	MS24662-154	.RIVET,BLIND	V
21	PAFZZ	96906	MS51861-47	.SCREW,TAPPING,THREA	16
22	XDFZZ	19207	7096945	.FRAME	2
23	PAFZZ	96906	MS24662-152	.RIVET,BLIND	26
24	XDFZZ	19207	7096946	.FRAME	2
25	XDFZZ	19207	7034351	.FRAME	1
26	PFFZZ	96906	MS24662-156	.RIVET,BLIND	10
27	XDFZZ	19207	10919699	.RETAINER	1
28	XDFZZ	19207	10919698	.WEATHERSTRIP	1

END OF FIGURE

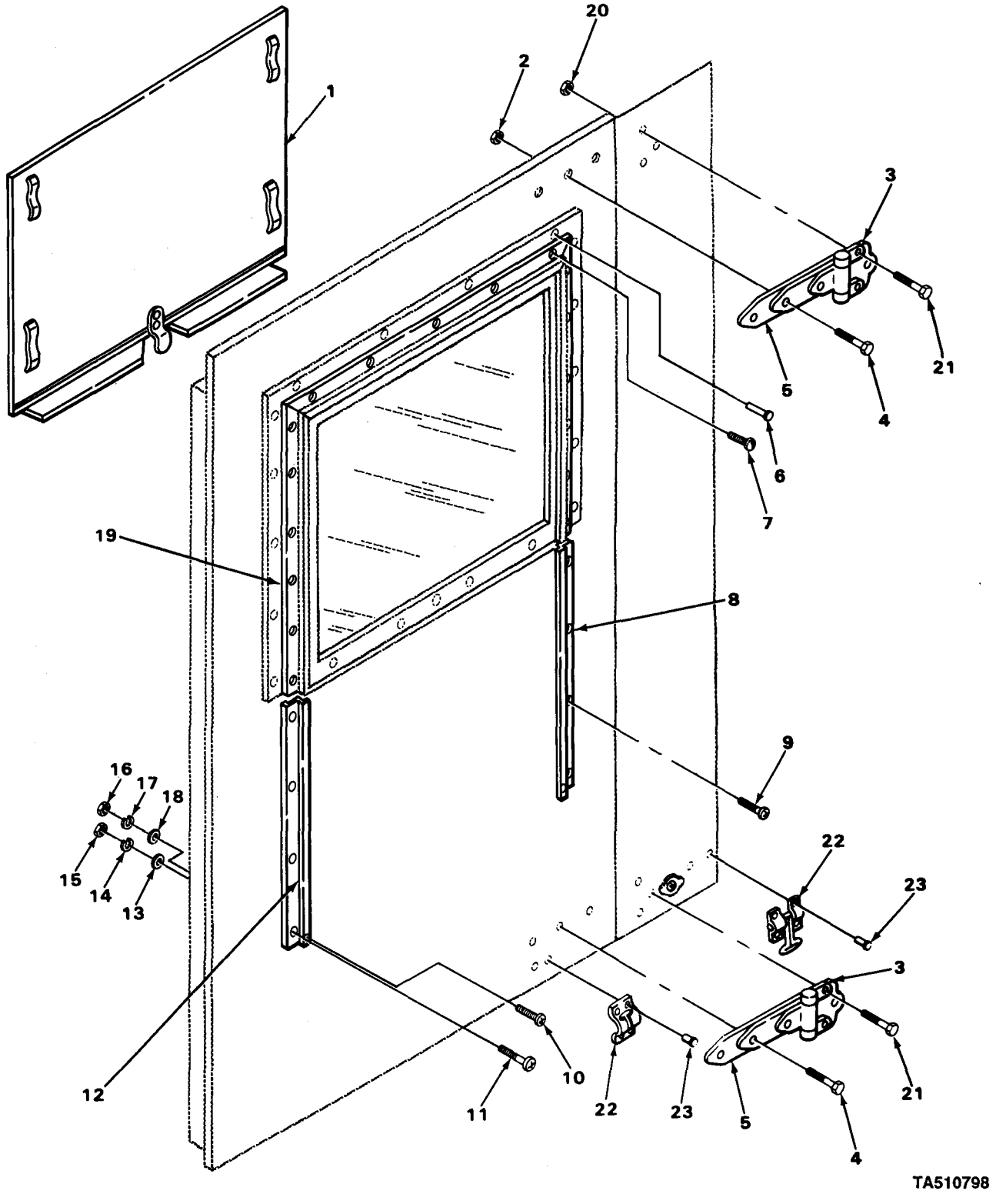

FIGURE 38. REAR RIGHT DOOR AND CURBSIDE DOOR (EXTERIOR VIEW).

(1) ITEM NO	(2) SMR CODE	(3) CAGEC	(4) PART NUMBER	(5) DESCRIPTION AND USABLE ON CODES (UOC)	(6) QTY
				GROUP 1801 BODY, CAB, HOOD, AND HULL ASSEMBLIES	
				FIG. 38 REAR RIGHT DOOR AND CURBSIDE DOOR (EXTERIOR VIEW)	
1	PAFZZ	96906	8328353	.PANEL ASSEMBLY	1
2	PAFZZ	96906	MS51922-9	.NUT,SELF-LOCKING,HE	6
3	XDFZZ	19207	7003081	.HINGE	2
4	PAFZZ	96906	MS90725-36	.BOLT,MACHINE	6
5	XDFZZ	19207	7034353	.SPACER	4
6	PAFZZ	96906	MS20426D6-7	.RIVET,SOLID	58
7	XDFZZ	96906	MS24621-45	.SCREW,TAPPING,THREA	14
8	PAFZZ	19207	7092451	.STRUCTURAL SECTION,	1
9	XDFZZ	96906	MS24619-25	.SCREW,TAPPING,THREA	4
10	PAFZZ	96906	MS35206-250	.SCREW,MACHINE	2
11	PAFZZ	96906	MS35207-265	.SCREW,MACHINE	8
12	PAFZZ	19207	7092452	.GUIDE,PANEL	1
13	PAFZZ	96906	MS27183-8	.WASHER,FLAT	8
14	PAFZZ	96906	MS35335-32	.WASHER,LOCK	8
15	PAFZZ	96906	MS35650-302	.NUT,PLAIN,HEXAGON	8
16	PAFZZ	96906	MS35649-282	.NUT,PLAIN,HEXAGON	2
17	PAFZZ	96906	MS35335-31	.WASHER,LOCK	2
18	PAFZZ	96906	MS27183-7	.WASHER,FLAT	2
19	XDFZZ	19207	7092397	.SASH ASSEMBLY	1
20	PAOZZ	96906	MS51922-9	NUT,SELF-LOCKING,HE	12
21	PAOZZ	96906	MS90725-36	BOLT,MACHINE	12
22	XDFZZ	96906	8376986	HOLDER	2
23	PAFZZ	96096	MS24662-152	RIVET,BLIND	16
24	XDOZZ	19207	10919588	PLATE,STRICKER	2
25	PAOZZ	96906	MS51862-40	SCREW,TAPPING,THREA	4
26	PAOZZ	96906	MS35494-85	SCREW,WOOD	31

END OF FIGURE

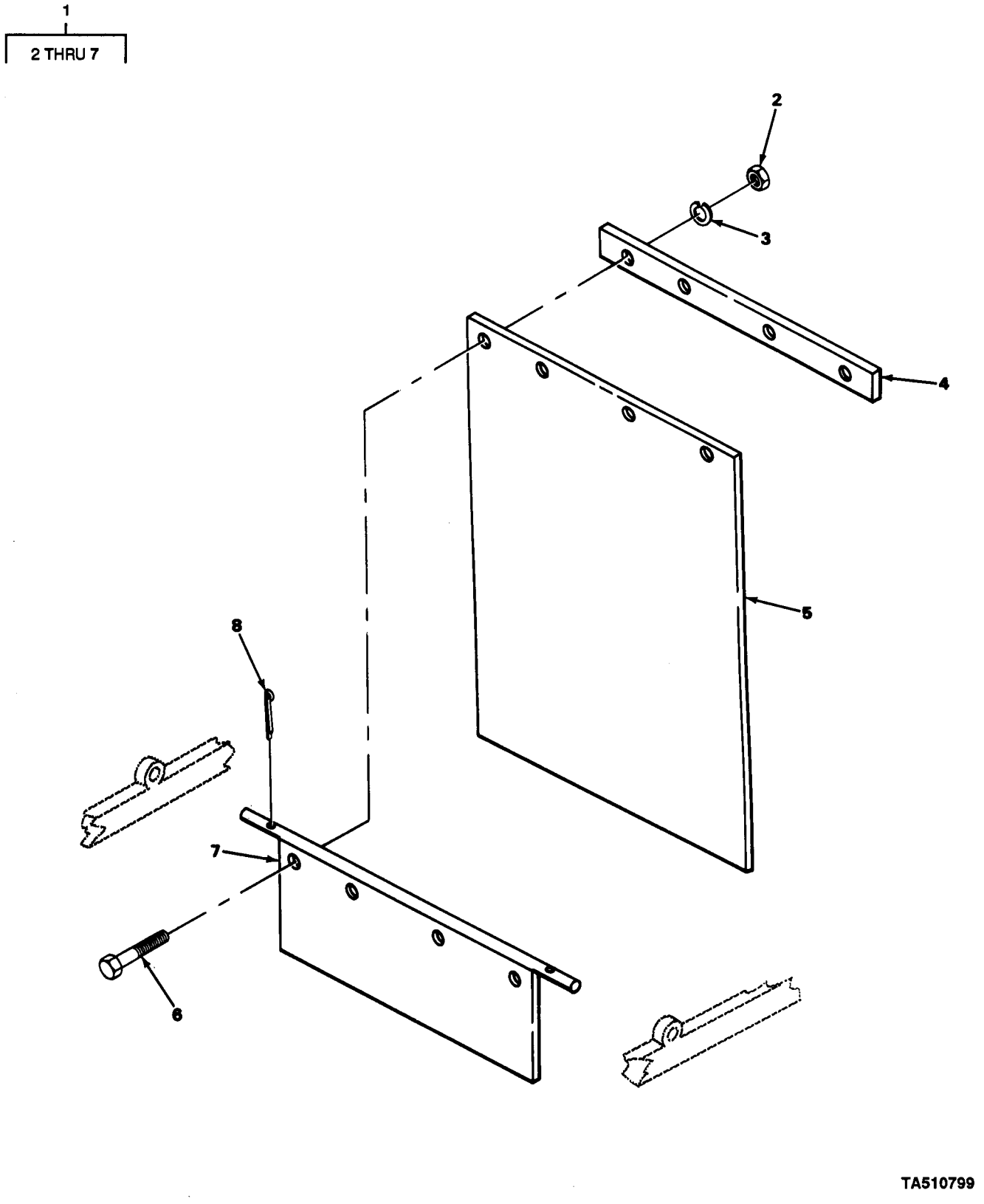

FIGURE 39. SPLASHGUARDS.

(1) ITEM NO	(2) SMR CODE	(3) CAGEC	(4) PART NUMBER	(5) DESCRIPTION AND USABLE ON CODES (UOC)	(6) QTY
				GROUP 1801 BODY, CAB, HOOD, AND HULL ASSEMBLIES	
				FIG. 39 SPLASHGUARDS	
1	XDOOO	19207	10919681	GUARD ASSEMBLY LEFT HAND	1
1	XDOOO	19207	7034030	GUARD ASSEMBLY RIGHT HAND	1
2	PAOZZ	96906	MS51967-2	.NUT,PLAIN,HEXAGON	4
3	PAOZZ	96906	MS35338-44	.WASHER,LOCK	4
4	XDOZZ	19207	7032059	.STRIP,METAL	1
5	PAOZZ	19207	7034070	.GUARD,SPLASH,VEHICU	1
6	PAOZZ	30076	128720	.SCREW,CAP,HEXAGON H	4
7	XDOZZ	19207	7034060	.BRACKET	1
8	PFOZZ	96906	MS24665-370	PIN,COTTER	2
				END OF FIGURE	

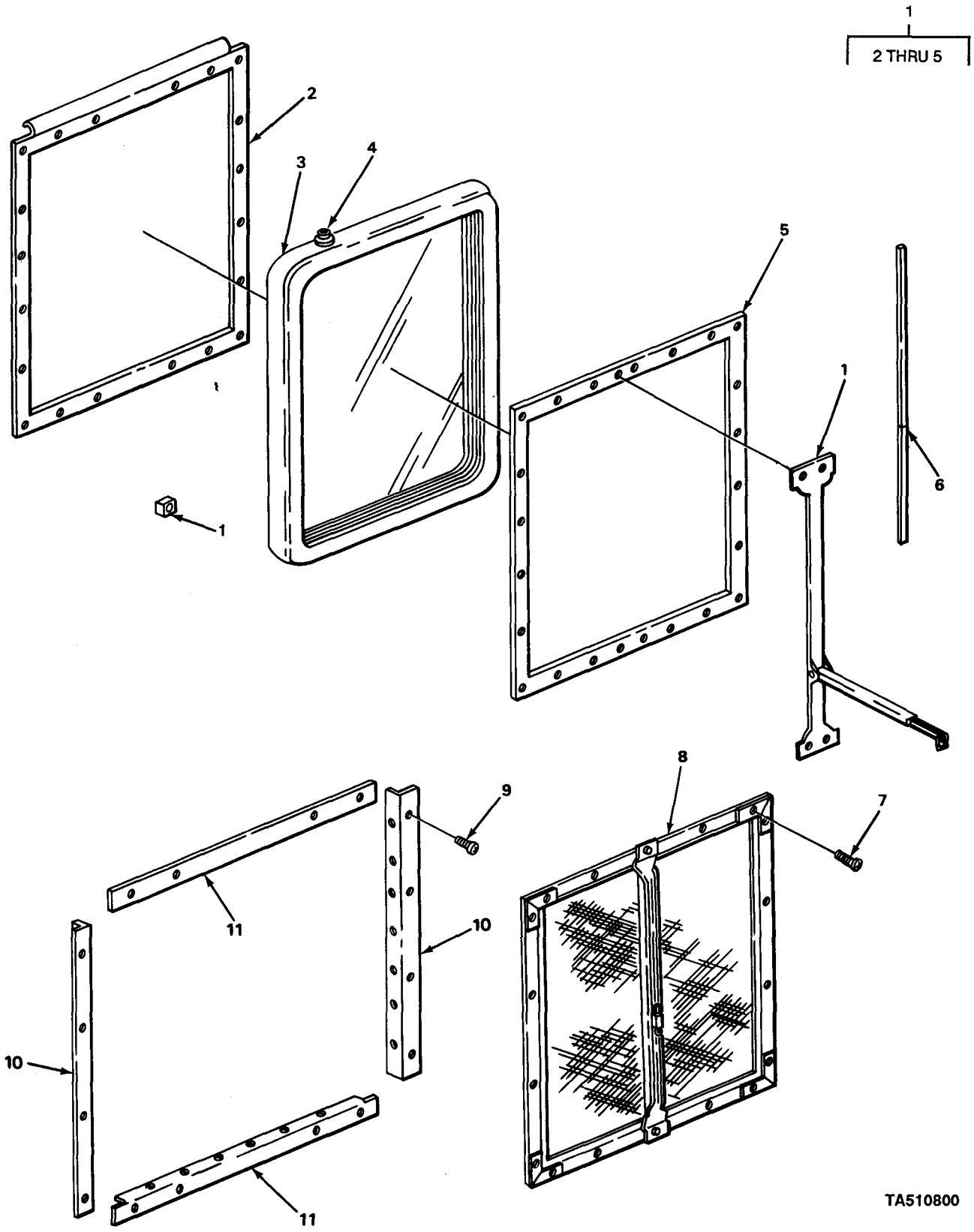

FIGURE 40. WINDOW AND SCREEN (INTERIOR VIEW).

(1) ITEM NO	(2) SMR CODE	(3) CAGEC	(4) PART NUMBER	(5) DESCRIPTION AND USABLE ON CODES (UOC)	(6) QTY
				GROUP 1802 FENDERS, RUNNING BOARDS WITH MOUNTING AND ATTACHING PARTS, OUTRIGGERS, WINDSHIELDS, GLASS, ETC,	
				FIG. 40 WINDOW AND SCREEN (INTERIOR VIEW)	
1	PAOOO	19207	7015121	WINDOW,VEHICULAR UOC:868	9
2	XDOZZ	19207	7015123	.FRAME,OUTER UOC:868	1
3	XDOZZ	19207	8328326	.GLASS UOC:868	18
4	XDOZZ	19207	10896800	.VENT,WINDOW UOC:868	9
5	XDOZZ	19207	7015122	.FRAME,INNER UOC:868	1
6	XDOZZ	19207	10919692	WEATHERSRIP UOC:868	9
7	PAOZZ	96906	MS51861-37	SCREW,TAPPING,THREA UOC:868	72
8	PAOZZ	19554	B42-42	SCREEN, WINDOW,MET A UOC:868	9
9	PAOZZ	96906	MS51861-47	SCREW,TAPPING,THREA UOC:868	144
10	XDOZZ	19207	7096945	FRAME UOC:868	18
11	XDOZZ	19207	7096946	FRAME UOC:868	18
				END OF FIGURE	

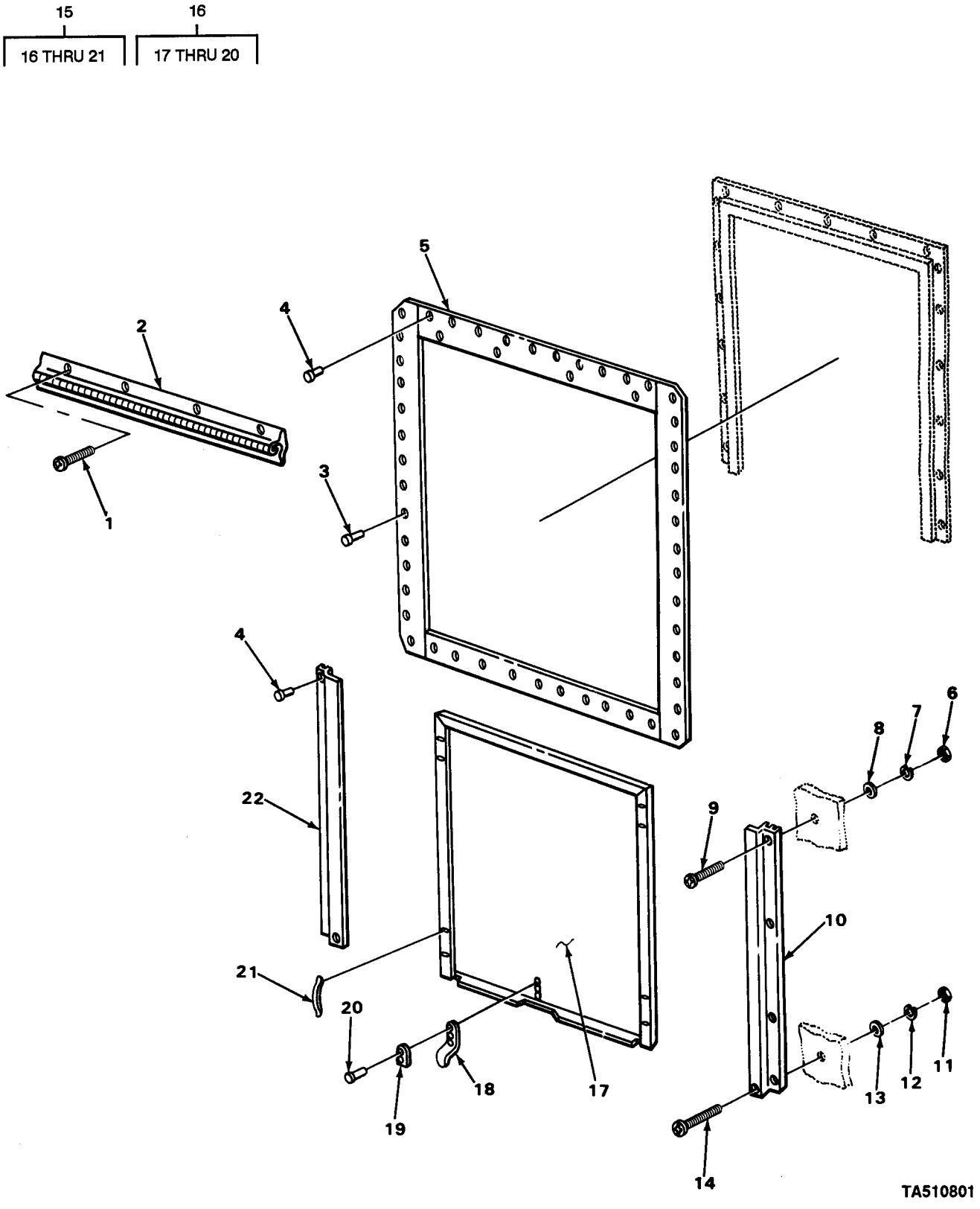

FIGURE 41. WINDOW AND BLACKOUT PANEL (EXTERIOR VIEW).

(1) ITEM NO	(2) SMR CODE	(3) CAGEC	(4) PART NUMBER	(5) DESCRIPTION AND USABLE ON CODES (UOC)	(6) QTY
				GROUP 1802 FENDERS, RUNNING BOARDS WITH MOUNTING AND ATTACHING PARTS, OUTRIGGERS, WINDSHIELDS, GLASS, ETC,	
				FIG. 41 WINDOW AND BLACKOUT PANEL (EXTERIOR VIEW)	
1	PAOZZ	96906	MS51861-47	SCREW,TAPPING,THREA UOC:868	54
2	XDOZZ	19207	7034404	HINGE UOC:868	9
3	PAOZZ	96906	MS20470D6-8	RIVET,SOLID UOC:868	270
4	PAOZZ	96906	MS20470D6-6	RIVET,SOLID UOC:868	198
5	XDOOO	19207	7096944	FRAME ASSEMBLY UOC:868	9
6	PAOZZ	96906	MS35650-302	NUT,PLAIN,HEXAGON UOC:868	72
7	PAOZZ	96906	MS35335-32	WASHER,LOCK UOC:868	72
8	PAOZZ	96906	MS27183-8	WASHER,FLAT UOC:868	72
9	PAOZZ	96906	MS35207-265	SCREW,MACHINE UOC:868	72
10	PAOZZ	19207	7092451	STRUCTURAL SECTION UOC:868	9
11	PAOZZ	96906	MS35649-282	NUT,PLAIN,HEXAGON UOC:868	18
12	PAOZZ	96906	MS35335-31	WASHER,LOCK UOC:868	18
13	PAOZZ	96906	MS27183-7	WASHER,FLAT UOC:868	18
14	PAOZZ	96906	MS35206-250	SCREW,MACHINE UOC:868	18
15	PAOZZ	19207	8328353	PANEL ASSEMBLY UOC:868	9
16	XDOOO	19207	10872314	.PANEL AND LATCH ASSEMBLY UOC:868	1
17	XDOZZ	19207	10872313	..PANEL	1
18	XDOZZ	19207	8722536	..LATCH	1
19	XDOZZ	19207	8722548	..PLATE	1
20	XDOZZ	19207	204923	..RIVET	2
21	PFOZZ	19207	8387658	.SPRING,FLAT UOC:868	4
22	PAOZZ	19207	7092452	GUIDE,PANEL LEFT HAND UOC:868	9
				END OF FIGURE	

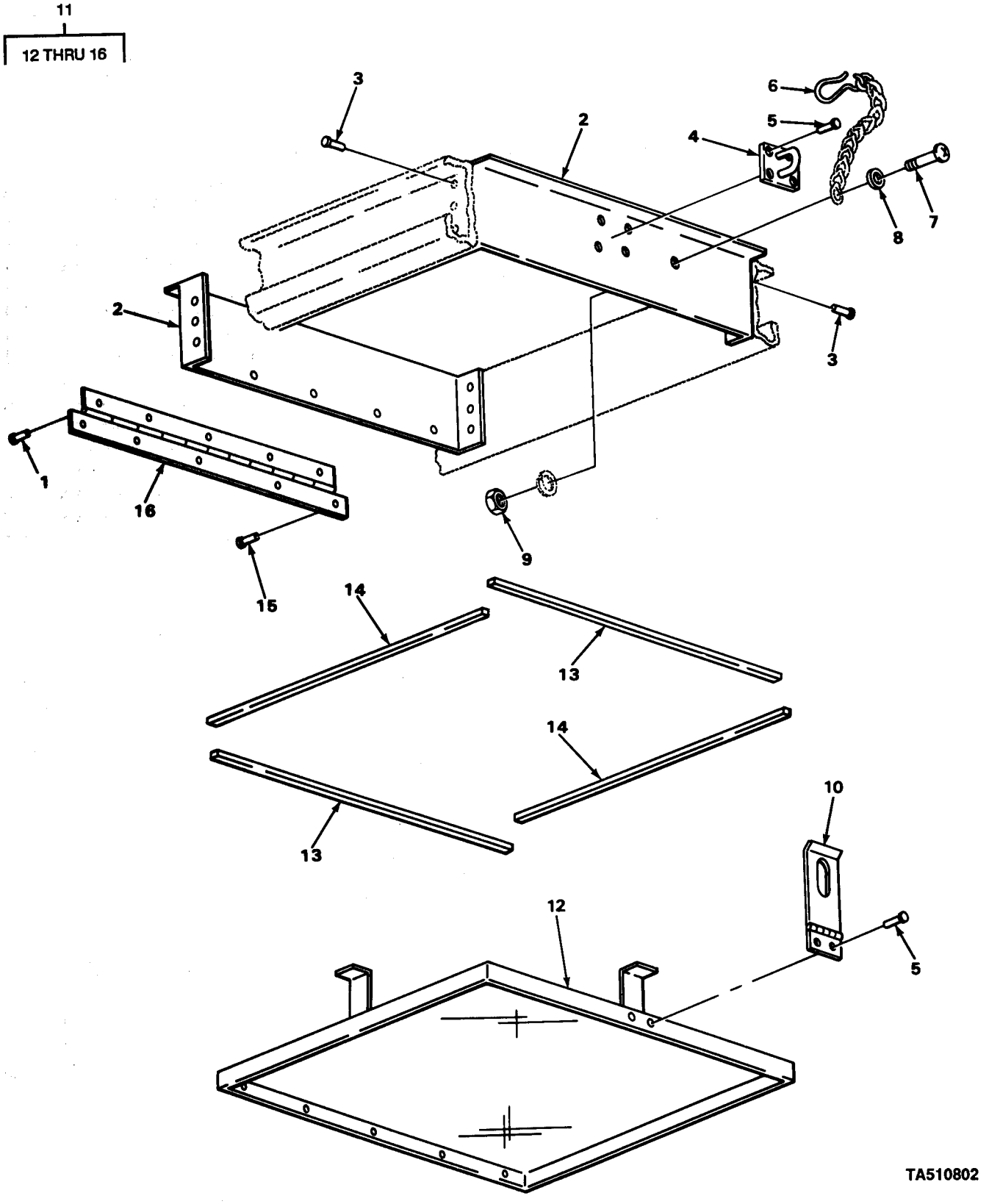

FIGURE 42. CABLE STORAGE BOX.

(1) ITEM NO	(2) SMR CODE	(3) CAGEC	(4) PART NUMBER	(5) DESCRIPTION AND USABLE ON CODES (UOC)	(6) QTY
				GROUP 1808 STOWAGE RACKS, BOXES, STRAPS, CARRYING CASES, CABLE REELS, HOSE REELS, ETC.	
				FIG. 42 CABLE STORAGE BOX	
1	PAOZZ	96906	MS20470D6-7	RIVET,SOLID HINGE TO BRACE	5
2	XDOZZ	19207	7034012	BRACE,END FRONT AND BACK OF BOX	2
3	PAOZZ	96906	MS20470D6-9	RIVET,SOLID	12
4	XDOZZ	19207	585794	STAPE LATCH, CABLE BOX	1
5	PAOZZ	96906	MS20470D6-8	RIVET,SOLID	6
6	XDOZZ	19207	506889	S-HOOK	1
7	PAOZZ	96906	MS35206-281	SCREW,MACHINE	1
8	PAOZZ	96906	MS27183-10	WASHER,FLAT	1
9	PAOZZ	96906	MS51943-31	NUT,SELF-LOCKING,HE	1
10	XDOZZ	19207	586468	HASP LATCH, CABLE BOX	1
11	XDOOO	19207	7034398	COVER ASSEMBLY	1
12	XDOZZ	19207	7034397	.COVER	1
13	XDOZZ	19207	7034394	.RUBBER STRIP	2
14	XDOZZ	19207	7034395	.RUBBER STRIP	2
15	PAOZZ	96906	MS20470D6-7	.RIVET,SOLID HINGE TO COVER	5
16	XDOZZ	19207	7034404	.HINGE	1

END OF FIGURE

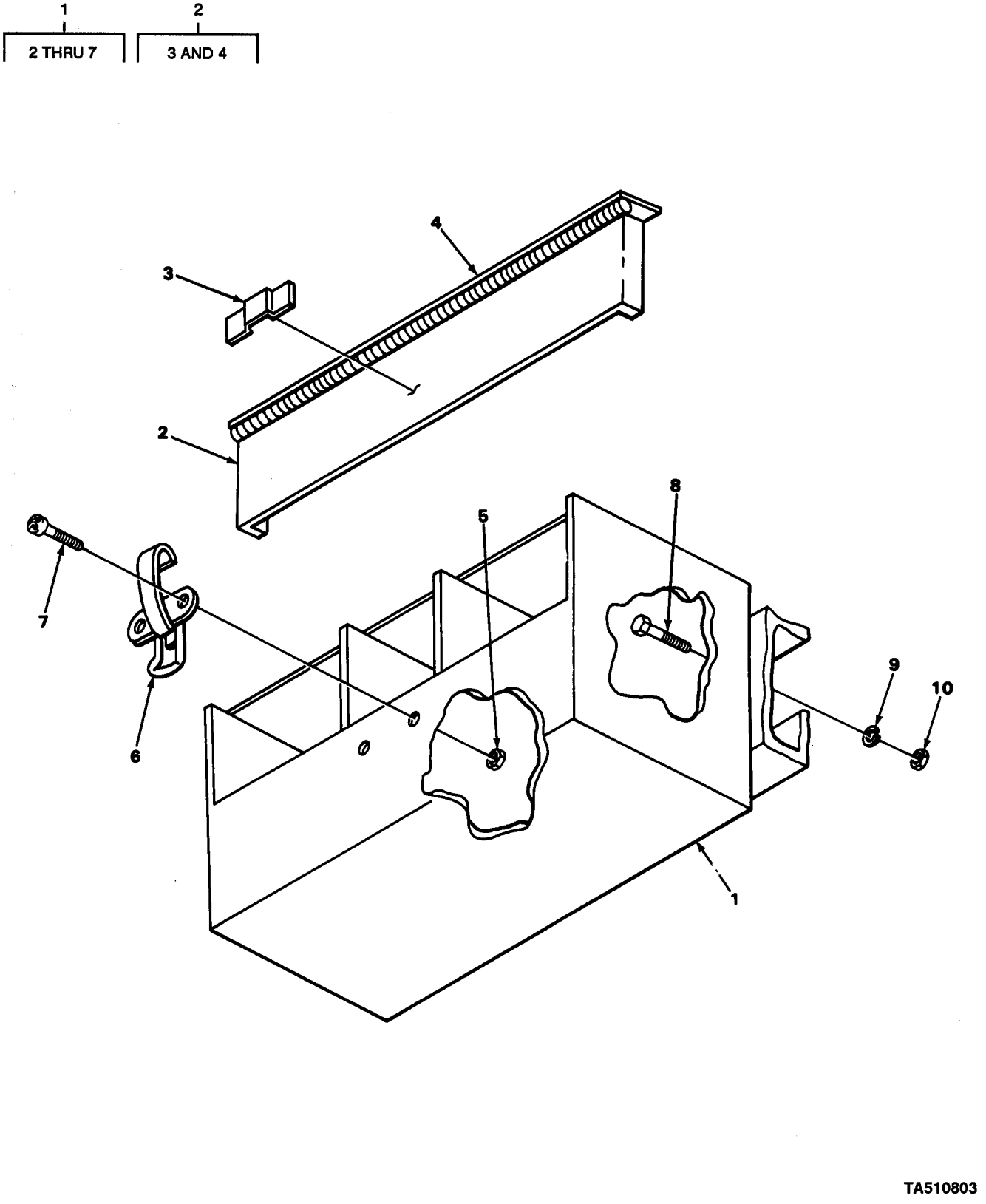

FIGURE 43. LAMP BOX ASSEMBLY.

(1) ITEM NO	(2) SMR CODE	(3) CAGEC	(4) PART NUMBER	(5) DESCRIPTION AND USABLE ON CODES (UOC)	(6) QTY
				GROUP 1808 STOWAGE RACKS, BOXES, STRAPS, CARRYING CASES, CABLE REELS, HOSE REELS, ETC.	
				FIG. 43 LAMP BOX ASSEMBLY	
1	XDOOO	19207	7034274	BOX ASSEMBLY LAMP STORAGE	1
2	XDOOO	19207	7015109	.BODY ASSEMBLY	1
3	XDOZZ	19207	7034292	..BRACKET	1
4	XDOZZ	19207	7034084	..HINGE	1
5	PAOZZ	96906	MS21044N3	.NUT,SELF-LOCKING,HE	2
6	PFOZZ	06004	ZLA1008-13	.CLAMP,HOOK	1
7	PAOZZ	96906	MS35207-263	.SCREW,MACHINE	2
8	PAOZZ	96906	MS90728-8	SCREW,CAP,HEXAGON H	3
9	PAOZZ	96906	MS35340-44	WASHER,LOCK	3
10	PAOZZ	96906	MS51967-2	NUT,PLAIN,HEXAGON	3
				END OF FIGURE	

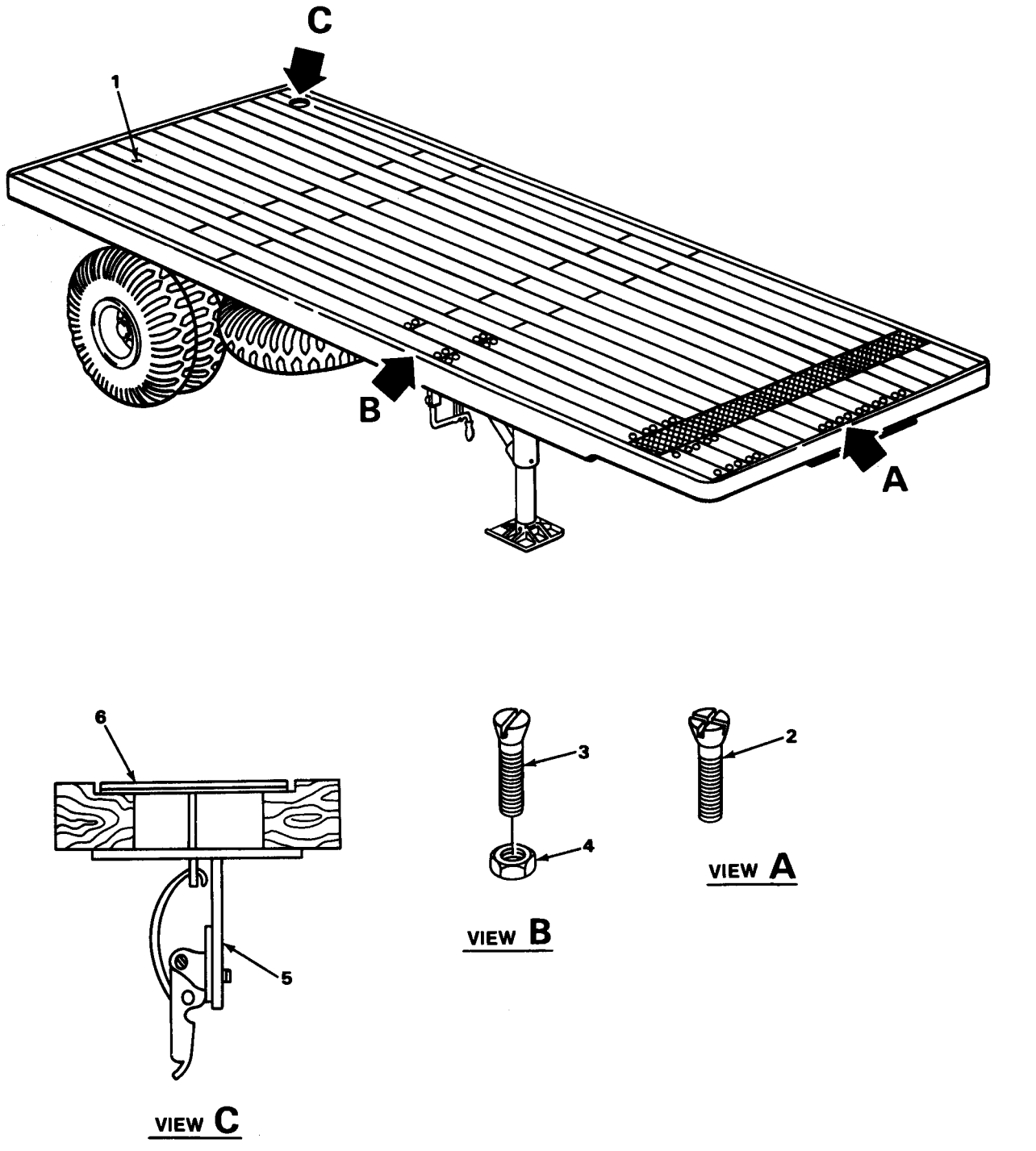

TA510804

FIGURE 44. TRAILER DECK.

(1) ITEM NO	(2) SMR CODE	(3) CAGEC	(4) PART NUMBER	(5) DESCRIPTION AND USABLE ON CODES (UOC)	(6) QTY
				GROUP 1810 CARGO BODY	
				FIG. 44 TRAILER DECK	
1	MFFZZ	19207	2706031-01	WOOD LAMENATED,DECK MAKE FROM WOOD P/N 13219E0079	V
2	XDFZZ	19207	176431	SCREW,SELF-TAPPING	32
3	PAOZZ	96906	MS35190-309	SCREW,MACHINE	356
4	PAFZZ	96906	MS51922-9	NUT,SELF-LOCKING,HE	356
5	PFOZZ	19207	7034406	CATCH,CLAMPING	1
6	PFOZZ	19207	7034405	STRIKE,CATCH	1
				END OF FIGURE	

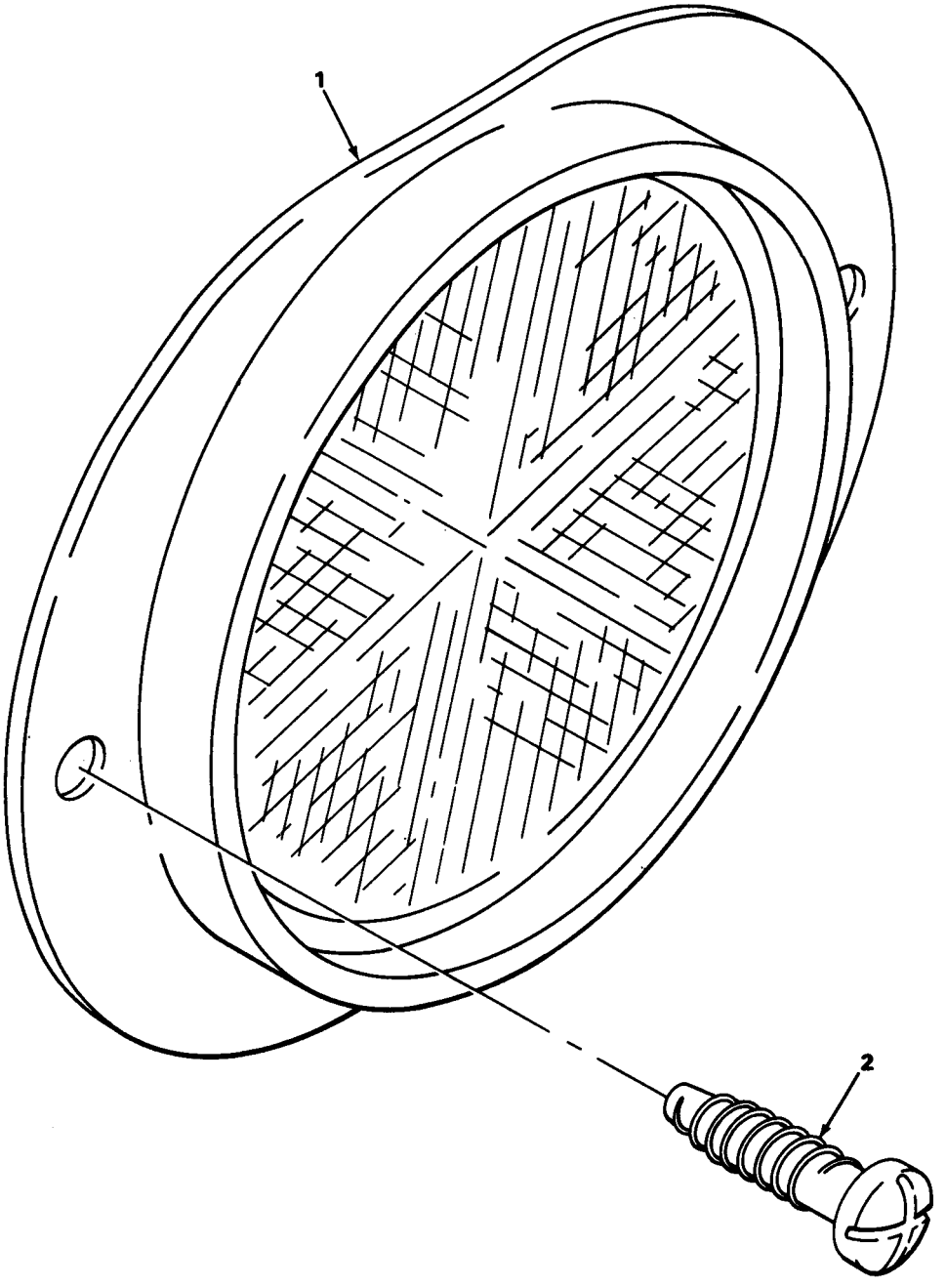

TA510805

FIGURE 45. REFLECTORS.

(1) ITEM NO	(2) SMR CODE	(3) CAGEC	(4) PART NUMBER	(5) DESCRIPTION AND USABLE ON CODES (UOC)	(6) QTY
				GROUP 22 BODY, CHASSIS, AND HULL ACCESSORY ITEMS	
				GROUP 2202 ACCESSORY ITEMS	
				FIG. 45 REFLECTORS	
1	PAOZZ	96906	MS35387-1	REFLECTOR,INDICATIN RED	4
1	PAOZZ	96906	MS35387-2	REFLECTOR,INDICATIN AMBER	4
2	PAOZZ	96906	MS24629-57	SCREW,TAPPING,THREA	16
				END OF FIGURE	

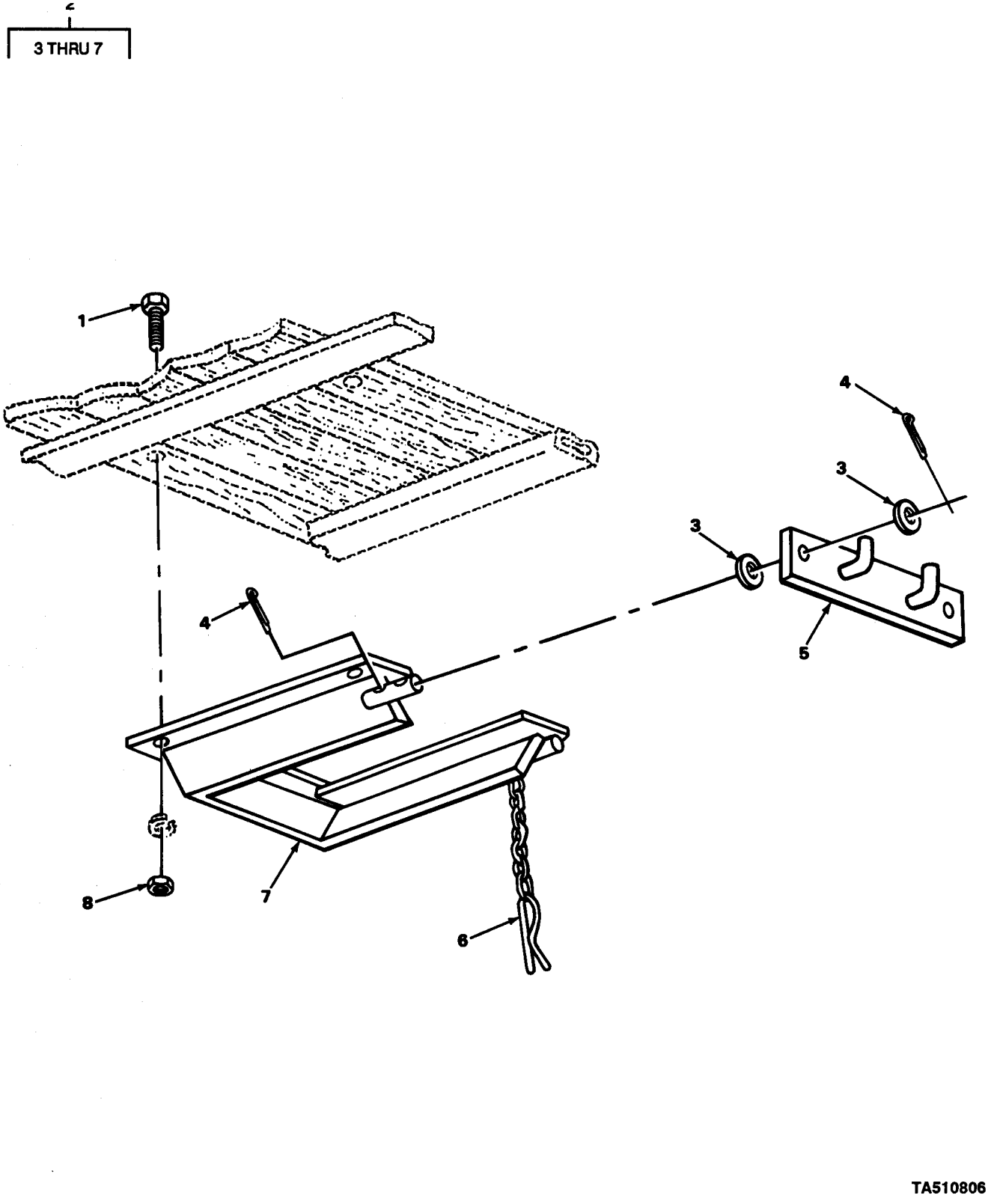

FIGURE 46. CHOCK BLOCK HANGER.

(1) ITEM NO	(2) SMR CODE	(3) CAGEC	(4) PART NUMBER	(5) DESCRIPTION AND USABLE ON CODES (UOC)	(6) QTY
				GROUP 2202 ACCESSORY ITEMS	
				FIG. 46 CHOCK BLOCK HANGER	
1	PAOZZ	96906	MS35190-293	SCREW, MACHINE	8
2	XDOOO	19207	10919690	HANGER ASSEMBLY CHOCK BLOCK	2
3	PAOZZ	96906	MS27183-15	.WASHER,FLAT	2
4	PAOZZ	96906	MS24665-351	.PIN,COTTER	2
5	XDOZZ	19207	7034050	.PLATE ASSEMBLY	1
6	PAOZZ	19207	7753912	.PIN,LOCK	1
7	XDOZZ	19207	10919689	.FRAME CHOCK BLOCK HANGER	1
8	PAOZZ	96906	MS51922-1	NUT,SELF-LOCKING,HE	8
				END OF FIGURE	

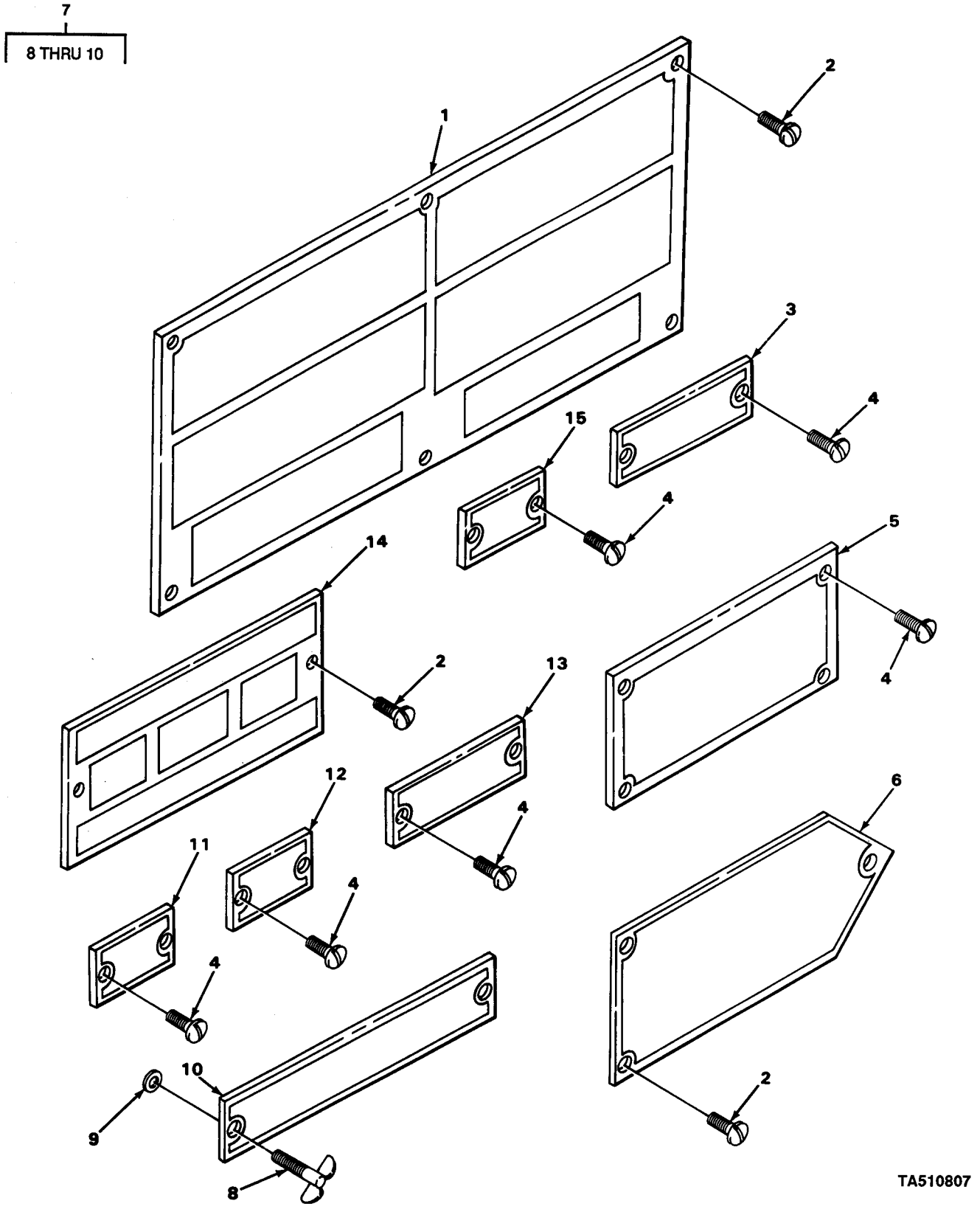

FIGURE 47. DATA PLATES.

(1) ITEM NO	(2) SMR CODE	(3) CAGEC	(4) PART NUMBER	(5) DESCRIPTION AND USABLE ON CODES (UOC)	(6) QTY
				GROUP 2210 DATA PLATES AND INSTRUCTION HOLDERS	
				FIG. 47 DATA PLATES	
1	PAOZZ	19207	7034105	PLATE IDENTIFICATION VHEICULAR DATA	1
1	XDOZZ	19207	11589752	PLATE PUBLICATIONS AND SHIPPING DATA UOC:868	1
2	PAOZZ	89346	111633	SCREW,TAPPING THREA	11
3	PFOZZ	19207	10919730	PLATE,IDENTIFICATIO BLACKOUT ON AND OFF UOC:868	1
4	PAOZZ	96906	MS35493-224	SCREW,WOOD UOC:869	2
4	PAOZZ	96906	MS35493-224	SCREW,WOOD UOC:868	14
5	PAOZZ	19207	7034229	PLATE,INSTRUCTION CIRCUIT BREAKER AND DOME LIGHT UOC:868	1
6	PAOZZ	19207	7034081	PLATE INSTRUCTION 110 VOLTS UOC:868	1
7	PAOZZ	19207	7034099	PLATE,INSTRUCTION 24 VOLT	1
8	XDOZZ	94222	85-12-120-16	.STUD	2
9	PAOZZ	96906	MS28775-010	.PACKING,PREFORMED	2
10	PAOZZ	19207	7034224	.PLATE, INSTRUCTION VEHICULAR DATA 24 VOLT	1
11	PFOZZ	19207	10919729	PLATE,IDENTIFICATIO DC LIGHTS UOC:868	1
12	PFOZZ	19207	10919731	PLATE,IDENTIFICATIO UOC:868	1
13	PFOZZ	19207	10919732	PLATE,IDENTIFICATIO	1
14	PAOZZ	19207	7979373	PLATE,IDENTIFICATIO	1
15	PAOZZ	19207	7034234	PLATE, DESIGNATION VEHICULAR INFORMATION 110 VOLT	1
				END OF FIGURE	

(1) ITEM NO	(2) SMR CODE	(3) CAGEC	(4) PART NUMBER	(5) DESCRIPTION AND USABLE ON CODES (UOC)	(6) QTY
				GROUP 94 REPAIR KITS	
				GROUP 9401 REPAIR KITS	
				FIG. KITS	
	PAOZZ	19207	RN13A	PARTS KIT,FLUID PRE	1
				FILTER ELEMENT,FLUI (1) 22-8	
				GASKET (1) 22-5	
				SPRING,HELICAL,COMP (1) 22-6	
				WASHER,SPRING TENSI (1) 22-9	
				DIAPHRAGM,CHAMBER,B (1) 21-11	
				GASKET (1) 21-7	
				NUT, PLAIN, HEXAGON (2) 14-18	
				NUT,PLAIN,HEXAGON (1) 21-1	
				PARTS KIT,BRAKE CHA (1) 31-37	
				SCREW,CAP,HEXAGON H (18) 21-9	
				SCREW,CAP,HEXAGON H (6) 18-3	
				SLEEVE,COMPRESSION, (2) 20-9	
				SPRING,HELICAL,COMP (1) 21-8	
				WASHER,LOCK (4) 3-11	
				WASHER,LOCK (18) 21-4	
				WASHER,LOCK (6) 18-2	
				WASHER,LOCK (4) 17-10	
				WASHER,LOCK (1) 19-7	
				END OF FIGURE	

(1) ITEM NO	(2) SMR CODE	(3) CAGEC	(4) PART NUMBER	(5) DESCRIPTION AND USABLE ON CODES (UOC)	(6) QTY
				GROUP 95 GENERAL USE STANCARDIZED PARTS	
				GROUP 9501 BULK MATERIAL	
				FIG. BULK	
1	XDOZZ	19207	1926021	CONDUIT	V
2	PAOZZ	17590	305087-0116	TUBE,METALLIC	V
3	XDOZZ	19207	8689210	TUBE,METALLIC	V
4	PAFZZ	81349	M13486-1-5	WIRE,ELECTRICAL	V
5	PAFZZ	81349	M13486/1-10	WIRE,ELECTRICAL	V
6	PAFZZ	97403	13219E0079	WOOD LAMINATE,DECKI	V
				END OF FIGURE	

CROSS-REFERENCE INDEXES

NATIONAL STOCK NUMBER INDEX

STOCK NUMBER	FIG	ITEM	STOCK NUMBER	FIG	ITEM
5320-00-011-9951	15	15	5330-00-090-2128	20	3
5315-00-014-2521	31	29	5365-00-090-5426	10	4
5315-00-014-2543	31	33	3120-00-091-9774	15	7
5310-00-017-9721	29	6	5310-00-091-9775	15	9
5306-00-017-9722	29	11	2530-00-091-9776	15	6
4730-00-018-9566	31	21	2530-00-091-9777	15	4
6240-00-019-0877	3	8	2530-00-093-5597	25	17
	4	9	3110-00-100-5951	25	12
	5	10	3110-00-100-6004	31	9
	6	10	5305-00-102-2966	38	26
6240-00-019-3093	3	10	5935-00-111-6189	10	1
	7	25	5305-00-115-9526	3	12
6220-00-025-3697	8	6		4	5
2590-00-030-6943	31	22		17	9
6220-00-040-2094	36	3		23	16
	41	15	3110-00-117-0759	31	14
6240-00-044-6914	3	9	5320-00-117-5853	41	4
	4	10	5320-00-117-5855	35	23
5310-00-045-3296	6	8		41	3
	13	12		42	5
5310-00-045-3299	7	15	5320-00-117-5856	42	3
2640-00-050-1235	26	4	2530-00-118-8589	23	25
5306-00-050-1238	5	8	5310-00-132-1438	7	27
4730-00-050-4208	31	25	2530-00-137-9235	20	1
5305-00-052-6917	37	14	4730-00-142-3075	23	8
5305-00-052-6921	45	2	2530-00-142-6045	21	1
5305-00-052-7492	35	11	5305-00-147-3238	1	9
	37	19	2640-00-147-5160	26	5
5305-00-052-8241	35	14	5975-00-152-1075	2	10
4730-00-054-2571	23	10	6145-00-152-6499	BULK	4
4730-00-054-2572	23	11	5340-00-157-1396	18	12
6150-00-055-1751	7	22	2530-00-162-1986	14	4
5999-00-057-2929	3	4	2510-00-168-2242	29	10
5310-00-061-4650	42	9	5340-00-169-4162	7	19
5305-00-068-0502	9	1	5330-00-173-4770	7	31
	39	6	5325-00-174-9038	2	15
5305-00-068-0511	23	24	5340-00-177-9931	32	19
4730-00-069-1186	16	11	2530-00-179-3635	15	2
	20	7	6220-00-179-4324	3	2
	23	6	2540-00-179-5583	35	5
	23	7	5305-00-180-1991	35	28
5305-00-071-2081	31	18	5325-00-185-0001	11	1
5310-00-080-6004	32	18	5325-00-185-0011	2	16
5340-00-080-9853	9	14	4730-00-187-7612	20	13
5310-00-082-1404	28	14	4730-00-196-1505	2	13
5310-00-087-4652	32	20	4730-00-200-0442	16	10
6220-00-087-9667	7	35	9905-00-202-3639	45	1
5340-00-087-9668	7	36	5325-00-202-4004	9	3
5310-00-088-1251	28	3	4710-00-203-3172	BULK	2
	46	8	2530-00-204-3622	14	9

CROSS-REFERENCE INDEXES

NATIONAL STOCK NUMBER INDEX

STOCK NUMBER	FIG	ITEM	STOCK NUMBER	FIG	ITEM
5940-00-204-8966	9	12	5330-00-285-5123	22	5
9905-00-205-2795	45	1	3020-00-287-8211	15	5
5360-00-205-4654	15	18	3020-00-287-8215	15	8
5360-00-205-4657	15	9	5365-00-289-4926	18	10
5365-00-205-5105	15	10	5310-00-292-7851	25	7
5310-00-209-0786	37	10	4730-00-293-7108	20	9
5310-00-209-0788	7	9		20	19
5310-00-209-0965	25	15		23	3
5310-00-209-1761	17	7		23	20
5340-00-211-6129	25	16	6240-00-295-2668	7	16
5310-00-220-2665	25	5	5330-00-297-7106	4	3
5310-00-220-6587	15	17	5306-00-297-8274	15	16
5310-00-220-6848	31	7	5315-00-298-1481	34	17
4730-00-221-2136	22	3	6220-00-299-7425	6	4
4730-00-223-9256	22	1	6220-00-299-7426	6	4
5305-00-225-3843	28	4	5315-00-316-1063	31	24
	43	8	2530-00-318-1227	21	10
5310-00-225-6993	31	23	3020-00-319-6011	31	8
5306-00-225-8496	25	1	5305-00-322-7348	31	15
5306-00-225-8499	16	4	6220-00-337-7463	7	1
5315-00-234-1664	29	12	6250-00-337-7465	7	17
5315-00-236-8359	39	8	6220-00-338-1083	8	1
4730-00-244-9848	20	5		8	1
4730-00-249-3935	20	4	6220-00-338-1086	8	1
5325-00-249-6345	9	6	5365-00-350-0155	34	5
	20	12	4030-00-350-8968	28	10
5935-00-257-1024	10	5	5330-00-353-0959	6	6
2610-00-262-8677	26	1	2530-00-359-1162	25	8
5305-00-267-8952	11	2	6250-00-371-4018	6	7
5305-00-269-2803	18	3	5306-00-383-4957	25	9
	21	8	5340-00-389-0318	35	8
5305-00-269-3217	32	17	5310-00-393-6685	10	2
5310-00-269-4040	32	15	5940-00-399-6676	9	5
5510-00-270-6031	BULK	6		12	5
5310-00-271-7454	7	43	5340-00-406-1550	35	26
2530-00-272-8106	17	1	5310-00-407-9566	16	3
5365-00-274-4544	16	6		25	2
5310-00-275-6635	17	5	4730-00-419-9425	16	7
5310-00-275-9460	14	20	5310-00-424-1452	34	6
5325-00-276-6098	9	3	5310-00-424-1456	34	4
2530-00-278-2243	18	7	5305-00-432-4172	28	16
2530-00-278-6555	17	4		40	7
4730-00-278-8825	20	10	5305-00-432-4203	35	10
	20	20		36	22
	23	4		37	21
	23	21		40	9
4730-00-278-8873	19	1		41	1
5325-00-281-1557	11	1	5305-00-432-4205	37	2
9905-00-282-7489	47	14	5305-00-432-4254	2	11
5320-00-285-1025	29	3		28	1

CROSS-REFERENCE INDEXES

NATIONAL STOCK NUMBER INDEX

STOCK NUMBER	FIG	ITEM	STOCK NUMBER	FIG	ITEM
5305-00-432-8222	35	20	5310-00-596-7691	36	9
5320-00-443-5065	14	6		38	14
5340-00-444-6468	43	6		41	7
5670-00-449-5071	40	8	5310-00-596-7693	36	6
5315-00-461-3835	14	22		38	17
5330-00-462-0907	3	3		41	12
9540-00-463-4500	36	11	5310-00-596-8169	6	5
	38	8	5315-00-616-5530	31	31
	41	10	5935-00-622-4948	7	32
5340-00-466-1965	32	3	5325-00-623-0928	7	18
5340-00-466-1978	35	9	2510-00-624-0254	33	5
5305-00-476-7369	35	24	5365-00-624-0255	34	15
5305-00-483-0552	38	25	2530-00-624-0256	13	15
5999-00-485-8955	10	3	5306-00-624-0257	34	20
6220-00-500-3185	8	6	5305-00-633-0785	7	14
5340-00-503-5423	37	8	5310-00-637-9541	3	11
5340-00-510-8828	31	28		17	10
2590-00-510-8829	31	26		18	2
4710-00-511-1692	18	6		19	7
5330-00-513-9933	31	4		21	3
5310-00-514-6674	5	7		23	17
5315-00-515-0495	31	13	5340-00-656-4895	17	11
4730-00-516-7419	17	8	3120-00-661-3922	31	10
4730-00-528-2743	17	16	3040-00-670-5333	31	32
4710-00-534-2347	16	9	3040-00-678-4081	31	30
3020-00-562-0487	31	35	5306-00-678-4769	33	6
3020-00-562-0488	31	34	5365-00-678-6872	31	27
5340-00-562-1943	33	1	5330-00-678-9047	5	4
5330-00-562-1947	25	4	5310-00-679-3606	22	9
5340-00-562-1948	25	3	5360-00-679-5658	31	37
5310-00-562-1955	34	2	5305-00-680-9197	31	2
5315-00-562-1956	34	19	5310-00-682-5930	43	9
5935-00-572-9180	3	6	5305-00-688-1686	37	11
	4	4	3110-00-689-8250	25	13
6220-00-577-3434	6	1	2590-00-690-1586	31	17
6220-00-577-3435	6	1	2590-00-690-1588	31	1
4730-00-580-8457	22	4	2590-00-690-1589	31	1
5310-00-582-5965	9	2	9905-00-690-1828	47	15
	20	16	9905-00-690-1829	47	10
	29	9	9905-00-690-2672	47	7
	39	3	2530-00-692-6133	14	15
5330-00-584-0266	47	9	2530-00-693-1029	25	8
5310-00-584-5272	13	9	3020-00-701-4980	31	6
	32	2	3120-00-701-4995	31	11
5310-00-584-7888	14	21	5305-00-701-5071	6	11
5310-00-586-1767	31	16	9905-00-702-7265	47	5
4730-00-595-0083	20	2	9905-00-703-4105	47	1
5310-00-595-7237	4	6	5315-00-705-4686	15	20
	14	17	5930-00-705-7187	7	6
5310-00-596-7691	1	5	5360-00-705-7189	7	7

CROSS-REFERENCE INDEXES

NATIONAL STOCK NUMBER INDEX

STOCK NUMBER	FIG	ITEM	STOCK NUMBER	FIG	ITEM
9905-00-706-2310	47	6	9905-00-752-4649	12	17
2510-00-706-7973	30	1	6220-00-752-5992	6	2
5360-00-706-9054	22	6	6220-00-752-5993	6	2
5320-00-720-6524	36	19	6220-00-752-6020	4	2
	38	6	3040-00-757-1718	25	11
5305-00-724-6772	14	19	5310-00-761-6882	9	17
	15	23		20	15
	25	19		39	2
5305-00-725-4183	32	14		43	10
	34	9	5310-00-763-8905	34	13
6220-00-726-1916	6	1	5305-00-764-0070	5	2
5305-00-726-2544	29	14	5310-00-768-0318	13	8
5305-00-726-2550	32	21	2530-00-770-7070	34	16
6220-00-727-3288	6	1	5935-00-773-1428	10	6
5930-00-729-8465	1	2	4730-00-773-2163	18	8
6220-00-729-9295	6	3	2530-00-773-9381	15	14
5310-00-732-0558	18	1	6220-00-775-2384	5	3
	19	6	5315-00-775-3912	46	6
	23	18	2530-00-776-0966	16	1
5310-00-732-0559	14	18	5360-00-780-0508	21	7
	21	2	4710-00-795-0544	16	5
5340-00-732-0642	7	11	6220-00-796-2241	7	13
5930-00-732-0651	7	41	5330-00-796-2242	7	40
5310-00-732-0652	7	4	5330-00-796-2243	7	38
5310-00-732-0654	7	3	6220-00-796-2244	7	37
5330-00-732-0655	7	2	5330-00-796-2254	7	29
5355-00-732-0656	7	8	2530-00-797-9295	22	2
5305-00-732-0657	7	5	5306-00-797-9296	20	17
5306-00-733-9239	25	9	5310-00-797-9332	14	10
2530-00-737-3260	16	2	5360-00-797-9339	14	12
5330-00-737-3354	18	9	5310-00-798-1265	33	2
5305-00-737-5694	7	12	5340-00-809-1492	9	14
2530-00-738-9061	24	2		11	3
2530-00-738-9620	24	1	5340-00-809-1494	9	14
4720-00-740-9331	9	3	4720-00-809-2750	18	13
5315-00-740-9379	14	13	5310-00-809-3079	13	10
5330-00-740-9550	25	20		31	19
2590-00-740-9553	25	21	5310-00-809-4058	42	8
3120-00-740-9567	14	8	5310-00-809-4061	28	8
2530-00-741-1078	23	15		46	3
2940-00-741-1081	22	8	4010-00-809-6431	29	7
5310-00-741-2088	16	8	5310-00-809-8533	2	6
2530-00-741-5748	22	7	5310-00-809-8541	33	3
2530-00-752-0513	34	16	5310-00-809-8544	36	7
3040-00-752-1156	29	4		38	18
5310-00-752-1650	25	6		41	13
9905-00-752-4649	9	11	5310-00-809-8546	36	10
	11	8		38	13
	12	3		41	8
	12	13	2640-00-810-5861	26	3

CROSS-REFERENCE INDEXES

NATIONAL STOCK NUMBER INDEX

STOCK NUMBER	FIG	ITEM	STOCK NUMBER	FIG	ITEM
5925-00-814-8148	2	8	5310-00-934-9757	36	5
5305-00-821-3869	32	8		38	16
5935-00-833-8561	9	6		41	11
	12	6	5310-00-934-9758	18	14
5970-00-833-8562	9	7	5925-00-952-8641	2	8
	12	7	5305-00-957-2639	9	15
5310-00-833-8567	3	5	5305-00-958-5248	46	1
5320-00-837-5017	42	1	5305-00-958-6073	46	3
	42	15	5305-00-964-0503	23	13
5315-00-839-5820	35	6	5340-00-970-3258	34	3
5315-00-839-5821	46	4	2510-00-971-4753	34	11
5310-00-842-1211	32	6	5320-00-973-7912	35	2
5315-00-842-3044	14	11		37	23
5310-00-842-7783	34	18		38	23
5305-00-844-9888	28	13	9905-00-979-4458	12	2
5935-00-846-3883	9	13		12	14
6220-00-846-9745	5	1		12	18
4820-00-849-1220	23	23	5310-00-982-5009	29	15
5310-00-851-2674	29	8	5310-00-984-3806	36	2
5340-00-854-6729	9	14		36	21
	11	3		38	2
5305-00-855-0836	36	24		38	20
	37	1		44	4
5305-00-855-0957	37	17	5305-00-984-4983	7	34
5940-00-867-5245	5	5	5305-00-984-4988	7	21
5315-00-876-7756	15	11	5305-00-984-4989	7	10
5310-00-877-5795	32	11	5305-00-984-6189	7	33
	34	8	5305-00-984-6198	36	13
5310-00-877-5797	43	5		38	10
5305-00-883-0628	47	2		41	14
5305-00-889-3002	7	20	5305-00-984-6214	6	9
9905-00-893-3570	12	24	5305-00-984-6215	18	4
5340-00-893-4100	31	3	5310-00-985-0782	34	14
5310-00-897-5940	14	23	5305-00-988-1725	42	7
	15	21	5305-00-988-3784	9	15
	25	14		11	2
5305-00-900-1115	2	14	5305-00-989-7434	13	11
5305-00-901-2101	47	4		43	7
	47	4	5305-00-993-1848	36	12
5310-00-903-8282	9	16		38	11
	11	4		41	9
4730-00-908-3193	18	5	5340-00-993-6207	11	3
2530-00-920-7568	17	2	3110-00-995-3855	31	36
5305-00-922-7994	32	9	9905-00-999-7369	20	6
5330-00-930-5292	18	11	9905-00-999-7370	20	6
	19	2	5315-01-031-4458	14	16
4720-00-933-6956	20	14	5360-01-036-8596	14	14
5310-00-934-9751	36	8	5360-01-037-1083	14	3
	38	15	5310-01-040-7465	14	2
	41	6	6145-01-043-7863	BULK	5

CROSS-REFERENCE INDEXES

NATIONAL STOCK NUMBER INDEX

STOCK NUMBER	FIG	ITEM	STOCK NUMBER	FIG	ITEM
4710-01-049-8921	19	8			
4710-01-049-8922	19	4			
9905-01-050-3055	9	9			
5340-01-053-5090	15	2			
5306-01-075-8519	36	15			
	36	20			
	38	4			
	38	21			
1440-01-077-1600	21	5			
5360-01-077-7872	41	21			
5330-01-078-3985	7	23			
2590-01-091-7620	31	20			
2530-01-092-6445	14	5			
6220-01-093-4439	3	1			
2530-01-094-7940	15	22			
5306-01-102-7336	29	5			
5310-01-110-4242	14	1			
2530-01-110-4321	25	18			
5930-01-114-7608	1	11			
2510-01-115-2278	36	17			
	38	12			
	41	22			
2530-01-119-1838	25	10			
6220-01-123-1353	7	39			
6250-01-141-1543	7	24			
2530-01-145-6819	25	10			
5340-01-150-1023	37	5			
5340-01-150-1024	37	6			
5340-01-150-1025	37	5			
2540-01-150-1026	37	18			
2540-01-150-1037	37	16			
2540-01-150-1038	37	16			
3040-01-157-6315	29	13			
5340-01-163-1331	7	30			
9905-01-189-6442	47	13			
9905-01-189-6443	47	3			
9905-01-189-6444	47	11			
5975-01-189-9983	2	2			
5340-01-190-5607	37	7			
9905-01-194-9909	47	12			
5975-01-195-7621	2	1			
5925-01-205-2679	2	9			
5325-01-258-2005	28	6			
5340-01-258-2007	44	6			
5340-01-258-2015	44	5			
2540-01-258-2054	39	5			
5365-01-272-5486	37	15			
2510-01-286-3418	40	1			

CROSS-REFERENCE INDEXES

PART NUMBER INDEX

CAGEC	PART NUMBER	STOCK NUMBER	FIG	ITEM
16662	AC2511	4730-00-293-7108	20	19
			23	3
			23	20
88044	AN910-3	4730-00-223-9256	22	1
70485	AN931-10-14	5325-00-281-1557	11	1
88044	AN931-12-17	5325-00-174-9038	2	15
77926	A02157-103	5310-00-209-0788	7	9
78500	A173736H8	2530-00-692-6133	14	15
23705	A298322	4710-00-511-1692	18	6
23705	A298748	2530-00-741-1078	23	15
23705	A298749	2530-00-797-9295	22	2
19554	B42-42	5670-00-449-5071	40	8
81348	CMDX2-3PT573036	5340-00-809-1492	9	14
			11	3
63477	FC10937	3120-00-091-9774	15	7
76005	FC11589	2530-00-278-6555	17	4
63477	FC19136	5315-00-876-7756	15	11
63477	FC19500A	5315-00-705-4686	15	20
63477	FD-6145		17	3
63477	FD20333	4710-00-795-0544	16	5
63477	FF20339		15	22
63477	F20321	3020-00-287-8211	15	5
63477	F56115	2530-00-776-0966	16	1
79146	HO-168-6X4	4730-00-069-1186	20	7
80837	J-1276	2590-00-510-8829	31	26
80837	J-3207-1	3040-00-678-4081	31	30
80837	J1206A	5365-00-678-6872	31	27
80837	J1386	2590-00-030-6943	31	22
80837	J3203G	5330-00-513-9933	31	4
80837	J3205	5360-00-679-5658	31	37
80837	J3206	3040-00-670-5333	31	32
80837	J3237	5315-00-515-0495	31	13
80837	J3265	5310-00-586-1767	31	16
80837	J3269-13	2590-00-690-1586	31	17
80837	J3288	5340-00-510-8828	31	28
80837	J344-1F	3020-00-701-4980	31	6
66821	K12528	3110-00-100-6004	31	9
80837	L1540	2590-00-690-1589	31	1
96906	MS1003-1		15	12
96906	MS15003-1	4730-00-050-4208	31	25
96906	MS15570-1251	6240-00-019-0877	3	8
			4	9
			5	10
			6	10
96906	MS15570-623	6240-00-019-3093	3	10
			7	25
96906	MS16536-175	5320-00-011-9951	15	15
96906	MS17169-12	3110-00-117-0759	31	14
96906	MS18154-58	5305-00-115-9526	3	12
			4	5
			17	9

CROSS-REFERENCE INDEXES

PART NUMBER INDEX

CAGEC	PART NUMBER	STOCK NUMBER	FIG	ITEM
96906	MS18154-58	5305-00-115-9526	23	16
96906	MS19059-1019	3110-00-995-3855	31	36
96906	MS19081-112	3110-00-100-5951	25	12
96906	MS20426D6-7	5320-00-720-6524	36	19
			38	6
96906	MS20470D6-6	5320-00-117-5853	41	4
96906	MS20470D6-7	5320-00-837-5017	42	1
			42	15
96906	MS20470D6-8	5320-00-117-5855	35	23
			41	3
			42	5
96906	MS20470D6-9	5320-00-117-5856	42	3
96906	MS20913-1S	4730-00-221-2136	22	3
96906	MS21044N3	5310-00-877-5797	43	5
96906	MS21044N8	5310-00-877-5795	32	11
			34	8
96906	MS21045-10	5310-00-982-5009	29	15
96906	MS21083N4	5310-00-903-8282	9	16
			11	4
96906	MS21333-103	5340-00-854-6729	9	14
			11	3
96906	MS21333-105	5340-00-809-1494	9	14
96906	MS21333-97	5340-00-080-9853	9	14
96906	MS21333-99	5340-00-993-6207	11	3
96906	MS24615-26		35	19
96906	MS24615-38	5305-00-855-0836	36	24
			37	1
96906	MS24617-55	5305-00-052-8241	35	14
96906	MS24618-41		1	6
96906	MS24618-42		7	44
96906	MS24618-50		9	15
96906	MS24619-25		36	16
			38	9
96906	MS24621-15	5305-00-844-9888	28	13
96906	MS24621-45		36	18
			38	7
96906	MS24621-61		1	7
96906	MS24629-46	5305-00-855-0957	37	17
96906	MS24629-50	5305-00-052-6917	37	14
96906	MS24629-57	5305-00-052-6921	45	2
96906	MS24629-61	5305-00-052-7492	35	11
			37	19
96906	MS24662-152	5320-00-973-7912	35	2
			37	23
			38	23
96906	MS24662-154		35	27
			37	20
96906	MS24662-156		37	26
96906	MS24665-134	5315-00-839-5820	35	6
96906	MS24665-283	5315-00-842-3044	14	11
96906	MS24665-351	5315-00-839-5821	46	4

CROSS-REFERENCE INDEXES

PART NUMBER INDEX

CAGEC	PART NUMBER	STOCK NUMBER	FIG	ITEM
96906	MS24665-357	5315-00-298-1481	34	17
96906	MS24665-370	5315-00-236-8359	39	8
96906	MS24665-495	5315-00-234-1664	29	12
96906	MS25036-102	5940-00-204-8966	9	12
96906	MS27148-2	5999-00-057-2929	3	4
96906	MS27151-28	5310-00-985-0782	34	14
96906	MS27183-10	5310-00-809-4058	42	8
96906	MS27183-14	5310-00-080-6004	32	18
96906	MS27183-15	5310-00-809-4061	28	8
			46	3
96906	MS27183-19	5310-00-809-3079	13	10
			31	19
96906	MS27183-23	5310-00-809-8533	2	6
96906	MS27183-27	5310-00-809-8541	33	3
96906	MS27183-6	5310-00-082-1404	28	14
96906	MS27183-7	5310-00-809-8544	36	7
			38	18
			41	13
96906	MS27183-8	5310-00-809-8546	36	10
			38	13
			41	8
96906	MS28775-010	5330-00-584-0266	47	9
96906	MS35190-293	5305-00-958-5248	46	1
96906	MS35190-309	5305-00-958-6073	46	3
96906	MS35191-289	5305-00-988-3784	9	15
			11	2
96906	MS35191-290	5305-00-957-2639	9	15
96906	MS35206-226	5305-00-984-4983	7	34
96906	MS35206-228	5305-00-984-4988	7	21
96906	MS35206-229	5305-00-984-4989	7	10
96906	MS35206-241	5305-00-984-6189	7	33
96906	MS35206-242	5305-00-889-3002	7	20
96906	MS35206-250	5305-00-984-6198	36	13
			38	10
			41	14
96906	MS35206-267	5305-00-984-6214	6	9
96906	MS35206-268	5305-00-984-6215	18	4
96906	MS35206-281	5305-00-988-1725	42	7
96906	MS35207-263	5305-00-989-7434	13	11
			43	7
96906	MS35207-265	5305-00-993-1848	36	12
			38	11
			41	9
96906	MS35223-73	5305-00-688-1686	37	11
96906	MS35333-42	5310-00-595-7237	4	6
			14	17
96906	MS35335-31	5310-00-596-7693	36	6
			38	17
			41	12
96906	MS35335-32	5310-00-596-7691	1	5
			36	9

CROSS-REFERENCE INDEXES

PART NUMBER INDEX

CAGEC	PART NUMBER	STOCK NUMBER	FIG	ITEM
96906	MS35335-32	5310-00-596-7691	38	14
			41	7
96906	MS35335-33	5310-00-209-0786	37	10
96906	MS35335-34	5310-00-514-6674	5	7
96906	MS35338-119	5310-00-271-7454	7	43
96906	MS35338-42	5310-00-045-3299	7	15
96906	MS35338-43	5310-00-045-3296	6	8
			13	12
96906	MS35338-44	5310-00-582-5965	9	2
			20	16
			29	9
			39	3
96906	MS35338-45	5310-00-407-9566	16	3
			25	2
96906	MS35338-47	5310-00-209-0965	25	15
96906	MS35338-48	5310-00-584-5272	13	9
			32	2
96906	MS35338-51	5310-00-584-7888	14	21
96906	MS35340-44	5310-00-682-5930	43	9
96906	MS35387-1	9905-00-205-2795	45	1
96906	MS35387-2	9905-00-202-3639	45	1
96906	MS35420-1	6220-00-752-5992	6	2
96906	MS35420-2	6220-00-752-5993	6	2
96906	MS35421-1	6220-00-299-7425	6	4
96906	MS35421-2	6220-00-299-7426	6	4
96906	MS35422-1	6220-00-729-9295	6	3
96906	MS35423-1	6220-00-577-3434	6	1
96906	MS35423-2	6220-00-726-1916	6	1
96906	MS35424-1	6220-00-577-3435	6	1
96906	MS35424-2	6220-00-727-3288	6	1
96906	MS35478-1683	6240-00-044-6914	3	9
			4	10
96906	MS35478-1691	6240-00-295-2668	7	16
96906	MS35489-46	5325-00-185-0 01	11	1
96906	MS35489-64	5325-00-202-4004	9	3
96906	MS35489-66	5325-00-185-0011	2	16
96906	MS35489-69	5325-00-249-6345	9	3
			20	12
96906	MS35489-78	5325-00-276-6098	9	3
96906	MS35493-17	5305-00-900-1115	2	14
96906	MS35493-224	5305-00-901-2101	47	4
			47	4
96906	MS35493-78	5305-00-180-1991	35	28
96906	MS35494-85	5305-00-102-2966	38	26
96906	MS35649-202	5310-00-934-9758	18	14
96906	MS35649-282	5310-00-934-9757	36	5
			38	16
			41	11
96906	MS35650-302	5310-00-934-9751	36	8
			38	15
			41	6

CROSS-REFERENCE INDEXES

PART NUMBER INDEX

CAGEC	PART NUMBER	STOCK NUMBER	FIG	ITEM
96906	MS35671-64	5315-00-014-2543	31	33
96906	MS35691-1	5310-00-851-2674	29	8
96906	MS35692-17	5310-00-842-1211	32	6
96906	MS35692-53	5310-00-842-7783	34	18
96906	MS35746-1	4730-00-595-0083	20	2
96906	MS35748-1	5330-00-090-2128	20	3
96906	MS35756-15	5315-00-616-5530	31	31
96906	MS35782-5	4820-00-849-1220	23	23
96906	MS35842-12	4730-00-908-3193	18	5
96906	MS39020-1	9905-00-752-4649	9	11
			11	8
			12	3
			12	13
			12	17
96906	MS39020-2		11	6
			12	10
			12	21
			12	26
96906	MS39020-4	9905-01-050-3055	9	9
96906	MS39196-3	4730-00-278-8825	20	10
96906	MS39231-4	4730-00-249-3935	20	4
96906	MS39233-4	4730-00-187-7612	20	13
96906	MS51073-1	6220-00-337-7463	7	1
96906	MS51302-1	6220-00-846-9745	5	1
96906	MS51377-1	2640-00-810-5861	26	3
96906	MS51861-37	5305-00-432-4172	28	16
			40	7
96906	MS51861-45C	5305-00-147-3238	1	9
96906	MS51861-47	5305-00-432-4203	35	10
			36	22
			37	21
			40	9
			41	1
96906	MS51861-49	5305-00-432-4205	37	2
96906	MS51861-67C		11	2
96906	MS51861-69	5305-00-432-4254	2	11
			28	1
96906	MS51862-25	5305-00-476-7369	35	24
96906	MS51862-37	5305-00-432-8222	35	20
96906	MS51862-40	5305-00-483-0552	38	25
96906	MS51922-1	5310-00-088-1251	28	3
			46	8
96906	MS51922-17	5310-00-087-4652	32	20
96906	MS51922-33	5310-00-225-6993	31	23
96906	MS51922-45	5310-00-897-5940	14	23
			15	21
			25	14
96906	MS51922-49	5310-00-269-4040	32	15
96906	MS51922-9	5310-00-984-3806	36	2
			36	21
			38	2

CROSS-REFERENCE INDEXES

PART NUMBER INDEX

CAGEC	PART NUMBER	STOCK NUMBER	FIG	ITEM
96906	MS51922-9	5310-00-984-3806	38	20
			44	4
96906	MS51943-31	5310-00-061-4650	42	9
96906	MS51946-1	5306-00-733-9239	25	9
96906	MS51946-2	5306-00-383-4957	25	9
96906	MS51953-101	4730-00-196-1505	2	13
96906	MS51959-46	5305-00-764-0070	5	2
96906	MS51959-61	5305-00-701-5071	6	1
96906	MS51967-2	5310-00-761-6882	9	17
			20	15
			39	2
			43	10
96906	MS51967-8	5310-00-732-0558	18	1
			19	6
			23	18
96906	MS51968-20	5310-00-763-8905	34	13
96906	MS51968-8	5310-00-732-0559	14	18
			21	2
96906	MS52125-2	6220-01-093-4439	3	1
96906	MS521301A204120	4720-00-809-2750	18	13
96906	MS53004-1	2530-00-118-8589	23	25
96906	MS53007-1	9905-00-999-7370	20	6
96906	MS53007-2	9905-00-999-7369	20	6
96906	MS53045-3	2530-00-738-9061	24	2
96906	MS53047-1		4	7
96906	MS53068-1	2530-00-693-1029	25	8
96906	MS53068-2	2530-00-359-1162	25	8
96906	MS75021-1	5935-00-846-3883	9	13
96906	MS90725-170		32	16
96906	MS90725-31	5306-00-225-8496	25	1
96906	MS90725-34	5306-00-225-8499	16	4
96906	MS90725-36	5306-01-075-8519	36	15
			36	20
			38	4
			38	21
96906	MS90725-67	5305-00-269-3217	32	17
96906	MS90726-111		32	1
			34	12
96906	MS90726-113	5305-00-725-4183	32	14
			34	9
96906	MS90726-139	5305-00-724-6772	14	19
			15	23
			25	19
96906	MS90726-178		34	7
96906	MS90726-60	5305-00-269-2803	18	3
			21	78
96906	MS90727-161	5305-00-726-2544	29	14
96906	MS90727-163	5305-00-726-2550	32	21
96906	MS90727-3	5305-00-267-8952	11	2
96906	MS90727-32	5306-00-050-1238	5	8
96906	MS90728-125	5305-00-071-2081	31	18

CROSS-REFERENCE INDEXES

PART NUMBER INDEX

CAGEC	PART NUMBER	STOCK NUMBER	FIG	ITEM
96906	MS90728-189	5305-00-922-7994	32	9
96906	MS90728-62	5305-00-068-0511	23	24
96906	MS90728-65	5305-00-821-3869	32	8
96906	MS90728-78	5305-00-964-0503	23	13
96906	MS90728-8	5305-00-225-3843	28	4
			43	8
19207	M13486-1-10-1		12	25
81349	M13486-1-5	6145-00-152-6499	BULK	4
81349	M13486/1-10	6145-01-043-7863	BULK	5
61038	M21872	5315-00-014-2521	31	29
91340	M4X509	5330-00-285-5123	22	5
81349	M43436-1-3	9905-00-893-3570	12	24
40342	N-12970-A	2530-00-741-5748	22	7
40342	N10673A	5360-00-780-0508	21	7
23705	N12971	2940-00-741-1081	22	8
40342	N12972	5310-00-679-3606	22	9
52737	P120	5925-00-952-8641	2	8
19207	RN13A		KITS	
80837	R1556	2590-00-690-1588	31	1
81216	T39	3040-00-752-1156	29	4
81829	T40	5320-00-285-1025	29	3
61361	X10710	2530-00-272-8106	17	1
06004	ZLA1008-13	5340-00-444-6468	43	6
81348	ZZ-I-550/900-20/ TR175A/ONCTR		26	2
81348	ZZ-T-381M/GROUP3 /9.00-20/D/TBCC	2610-00-262-8677	26	1
77820	10-33646	5999-00-485-8955	10	3
18876	10004823	5930-00-729-8465	1	2
81348	102950		34	10
56161	10511509	5930-00-705-7187	7	6
19207	10871578		35	7
19207	10872313		41	17
19207	10872314		41	16
19207	10896720	5310-00-220-2665	25	5
19207	10896748	5320-00-443-5065	14	6
19207	10896800		40	4
19207	10919568		37	13
19207	10919588		38	24
19207	10919593		37	3
19207	10919596		36	23
19207	10919597		35	21
19207	10919601		27	1
19207	10919609		1	4
19207	10919621		28	15
19207	10919626-1		32	12
19207	10919666		28	11
19207	10919677	2540-01-150-1038	37	16
19207	10919678		1	10
19207	10919681		39	1
19207	10919681-34		35	12

CROSS-REFERENCE INDEXES

PART NUMBER INDEX

CAGEC	PART NUMBER	STOCK NUMBER	FIG	ITEM
19207	10919683		11	5
19207	10919684		35	18
19207	10919689		46	7
19207	10919690		46	23
19207	10919691		35	13
19207	10919692		40	6
19207	10919693		1	3
19207	10919694		12	23
19207	10919697		35	25
19207	10919698		35	17
			37	28
19207	10919699		37	27
19207	10919701		35	22
19207	10919729	9905-01-189-6444	47	11
19207	10919730	9905-01-189-6443	47	3
19207	10919731	9905-01-194-9909	47	12
19207	10919732	9905-01-189-6442	47	13
19207	10922113		29	2
19207	10922114		29	1
19207	10926021-1		2	7
19207	10942115		7	26
78500	1107F84	5340-00-211-6129	25	16
16764	110730	5310-00-637-9541	3	11
			17	10
			18	2
			19	7
			21	3
			23	17
89346	111633	5305-00-883-0628	47	2
19207	11589752		47	1
19207	11639519-2	5330-00-462-0907	3	3
19207	11639520		3	7
19207	11639535	6220-00-179-4324	3	2
19207	11640134	5340-00-177-9931	32	19
19207	11663025	5360-01-036-8596	14	14
19207	11663231	5315-01-031-4458	14	16
19207	11663232	5310-01-040-7465	14	2
19207	11663233	5360-01-037-1083	14	3
19207	11663236	5310-01-110-4242	14	1
19207	11668361	2530-00-142-6045	21	1
78500	1199F1436	2590-00-740-9553	25	21
78500	1229D862	5310-00-292-7851	25	7
78500	1229G969	5310-00-752-1650	25	6
19207	12314082	6220-01-123-1353	7	39
30076	128720	5305-00-068-0502	9	1
			39	6
97403	13219E0079	5510-00-270-6031	BULK	6
19975	145189		8	8
19207	1526499-01		11	7
19207	1526499-1		9	10
			12	4

CROSS-REFERENCE INDEXES

PART NUMBER INDEX

CAGEC	PART NUMBER	STOCK NUMBER	FIG	ITEM
19207	1526499-16		12	19
19207	1526499-38		12	15
83194	1628	9905-00-979-4458	12	2
			12	14
			12	18
78500	1745-E-5	2530-00-204-3622	14	9
19207	176431		44	2
19207	1926021		BULK	1
73842	20N	2640-00-147-5160	26	5
78550	200360	4730-00-278-8825	20	20
			23	4
			23	21
19207	2033172-15		20	21
19207	2033172-18		23	5
19207	2033172-23		23	22
19207	2033172-420		20	11
19207	204923		41	20
06853	235091	4730-00-580-8457	22	4
06853	235093	5360-00-706-9054	22	6
66640	27D252	5310-00-220-6848	31	7
19207	2706031-01		44	1
19207	2775529-60		23	12
78500	2797E5	5340-00-656-4895	17	11
17590	305087-0116	4710-00-203-3172	BULK	2
03533	307-3	4730-00-293-7108	20	9
78500	3219X2052	2530-00-093-5597	25	17
23705	336837	2510-00-624-0254	33	5
22337	4B22GG	2530-01-092-6445	14	5
40342	41X320	4730-00-142-3075	23	8
19207	42-C-15120-210		28	12
19207	501212		21	6
19207	501705		2	12
19207	503056		2	5
19207	506882	4030-00-350-8968	28	10
19207	506889		42	6
79466	50810	5975-00-152-1075	2	10
19207	5156636	5330-00-930-5292	18	11
			19	2
19207	5160323	5310-00-209-1761	17	7
19207	5167419	4730-00-516-7419	17	8
19207	5186963	4730-00-278-8873	19	1
19207	5214539	5310-00-275-6635	17	5
19207	5215673	5365-00-289-4926	18	10
19207	5228623	4730-00-244-9848	20	5
03776	5282743	4730-00-528-2743	17	6
19207	5298653	5365-00-274-4544	16	6
19207	542044	3120-00-661-3922	31	10
19220	5607-51	5340-00-466-1978	35	9
23705	563400	5365-00-350-0155	34	5
23705	565222		34	1
19220	5658-1	5340-00-503-5423	37	8

CROSS-REFERENCE INDEXES

PART NUMBER INDEX

CAGEC	PART NUMBER	STOCK NUMBER	FIG	ITEM
19207	5705700	2530-00-162-1986	14	4
19207	585794		42	4
19207	586468		42	10
19207	593599	5305-00-680-9197	31	23
73331	5936185	5355-00-732-0656	7	8
24617	5942525	5325-00-623-0928	7	18
73331	5942528	5330-00-678-9047	5	4
81343	6-4 120102BA	4730-00-069-1186	16	11
			23	6
			23	7
81343	6-4 120202BA(LONG NUT)		23	1
34623	648487	2640-00-050-1235	26	4
09386	65890	2530-00-738-9620	24	1
19207	7002825		1	8
19207	7003081		36	1
			38	3
19207	7010222	5340-01-150-1024	37	6
19207	7014984		32	7
19207	7015106		13	6
19207	7015109		43	2
19207	7015115		31	12
19207	7015116		31	12
19207	7015121	2510-01-286-3418	40	1
19207	7015122		40	5
19207	7015123		40	2
19207	7015126		37	9
19207	7015127		37	12
19207	7017306		32	4
19207	7032059		39	4
19207	7034006	2540-01-150-1037	37	16
19207	7034012		42	2
19207	7034025		28	5
19207	7034026		28	9
19207	7034027	5325-01-258-2005	28	6
19207	7034030		39	1
19207	7034050		46	5
19207	7034060		39	7
19207	7034065		13	7
19207	7034067		19	5
19207	7034070	2540-01-258-2054	39	5
19207	7034081	9905-00-706-2310	47	6
19207	7034084		43	4
19207	7034091		12	1
19207	7034099	9905-00-690-2672	47	7
19207	7034105	9905-00-703-4105	47	1
19207	7034107		13	13
19207	7034108		13	1
19207	7034111		13	3
19207	7034122		13	4
19207	7034123		13	5

CROSS-REFERENCE INDEXES

PART NUMBER INDEX

CAGEC	PART NUMBER	STOCK NUMBER	FIG	ITEM
19207	7034159		13	14
19207	7034224	9905-00-690-1829	47	10
19207	7034229	9905-00-702-7265	47	5
19207	7034234	9905-00-690-1828	47	15
19207	7034242		7	42
19207	7034274		43	1
19207	7034278	5340-01-150-1023	37	5
19207	7034283		9	4
19207	7034292		43	3
19207	7034335		28	2
19207	7034351		37	25
19207	7034352	5340-01-150-1025	37	5
19207	7034353		36	14
			38	5
19207	7034385		35	1
19207	7034387-1		32	10
19207	7034394		42	13
19207	7034395		42	14
19207	7034397		42	12
19207	7034398		42	11
19207	7034404		41	2
			42	16
19207	7034405	5340-01-258-2007	44	6
19207	7034406	5340-01-258-2015	44	5
19207	7034414		35	16
19207	7034417		35	15
19207	7034424		28	9
19207	7034425		28	7
19207	7034431		32	13
19207	7038789		1	1
19207	7044041	5925-01-205-2679	2	9
19207	7044043	5925-00-814-8148	2	8
19207	7056676-18		12	11
19207	7056676-8		12	22
19207	7057189	5360-00-705-7189	7	7
19207	7060818		9	8
			12	8
19207	7064896	5340-00-169-4162	7	19
19207	7064899	6150-00-055-1751	7	22
19207	7064961	5935-00-622-4948	7	32
19207	7064962	6250-00-337-7465	7	17
19207	7067973	2510-00-706-7973	30	1
01857	7092279	6220-00-338-1083	8	1
			8	1
19207	7092397		36	4
			38	19
19207	7092451	9540-00-463-4500	36	11
			38	8
			41	10
19207	7092452	2510-01-115-2278	36	17
			38	12

CROSS-REFERENCE INDEXES

PART NUMBER INDEX

CAGEC	PART NUMBER	STOCK NUMBER	FIG	ITEM
19207	7092452	2510-01-115-2278	41	22
19207	7096944		41	5
19207	7096945		35	4
			37	22
			40	10
19207	7096946		35	3
			37	24
			40	11
19207	7096954	5365-01-272-5486	37	15
19207	7096960		12	12
19207	7096961		12	16
19207	7096962		12	20
19207	7096963		12	9
19207	7096964	5930-01-114-7608	1	11
19207	7096965		2	4
21450	712288	3110-00-689-8250	25	13
71282	71244D	2530-01-145-6819	25	10
19207	7207919	5310-00-275-9460	14	20
19207	7264292-2	5975-01-189-9983	2	2
19207	7264293-2	5975-01-195-7621	2	1
19207	7264634	5340-00-389-0318	35	8
19207	7264735	2540-00-179-5583	35	5
19207	7264736	5340-00-406-1550	35	26
19207	7320641	5305-00-737-5694	7	12
19207	7320642	5340-00-732-0642	7	11
19207	7320651	5930-00-732-0651	7	41
16528	7320652	5310-00-732-0652	7	4
19207	7320654	5310-00-732-0654	7	3
19207	7320655	5330-00-732-0655	7	22
19207	7320657	5305-00-732-0657	7	5
19207	7320658	5330-00-297-7106	4	3
19207	7320684		7	28
19207	7349028	5310-00-424-1452	34	6
19207	7349029	5310-00-424-1456	34	4
19207	7365938	2590-01-091-7620	31	20
19207	7373260	2530-00-737-3260	16	2
19207	7373354	5330-00-737-3354	18	9
19207	7409331	4720-00-740-9331	19	3
19207	7411021	2530-00-137-9235	20	1
19207	7412088	5310-00-741-2088	16	8
19207	7418891	5306-01-102-7336	29	5
19207	7418892	5310-00-017-9721	29	6
08108	75A115V		8	9
19207	7520513	2530-00-752-0513	34	16
19207	7526020	6220-00-752-6020	4	2
19207	7526509	5330-00-353-0959	6	6
19207	7526515	6250-00-371-4018	6	7
19207	7526796	5310-00-596-8169	6	5
19207	7707070	2530-00-770-7070	34	16
19207	7716683	5935-00-257-1024	10	5
19207	7722333	5365-00-090-5426	10	4

CROSS-REFERENCE INDEXES

PART NUMBER INDEX

CAGEC	PART NUMBER	STOCK NUMBER	FIG	ITEM
19207	7723309	5310-00-393-6685	10	2
19207	7731428	5935-00-773-1428	10	6
19207	7739666	5306-00-017-9722	29	11
19207	7739703	3040-01-157-6315	29	13
19207	7739705	4010-00-809-6431	29	7
19207	7739707	2510-00-168-2242	29	10
19207	7745288		23	14
19207	7745464	4730-00-419-9425	16	7
19207	7753912	5315-00-775-3912	46	6
19207	7962241	6220-00-796-2241	7	13
19207	7962242	5330-00-796-2242	7	40
19207	7962243	5330-00-796-2243	7	38
19207	7962244	6220-00-796-2244	7	37
19207	7962246	5340-00-087-9668	7	36
19207	7962247	6220-00-087-9667	7	35
19207	7962251	5330-00-173-4770	7	31
19207	7962254	5330-00-796-2254	7	29
19207	7973340	4720-00-933-6956	20	14
19207	7974887	5340-00-893-4100	31	3
19207	7974917	5365-00-624-0255	34	15
19207	7974918	5340-00-562-1943	33	1
19207	7974919	5315-00-562-1956	34	19
19207	7974921	5310-00-562-1955	34	2
78500	7979271	5315-00-461-3835	14	22
19207	7979280	3120-00-740-9567	14	8
19207	7979296	5306-00-797-9296	20	17
19207	7979330	5315-00-740-9379	14	13
19207	7979332	5310-00-797-9332	14	10
19207	7979339	5360-00-797-9339	14	12
19207	7979349	5330-00-740-9550	25	20
19207	7979366	5310-00-798-1265	33	2
19207	7979373	9905-00-282-7489	47	14
63477	7979691	4730-00-773-2163	18	8
19207	7979892		13	2
81343	8 120111B	4730-00-054-2572	23	11
81343	8 120115B	4730-00-054-2571	23	10
19207	8328122	6220-00-500-3185	8	6
19207	8328279	2540-01-150-1026	37	18
19207	8328326		40	3
19207	8328353	6220-00-040-2094	36	3
			38	1
			41	15
19207	8332086	2530-00-278-2243	18	7
19207	8335233	5305-00-633-0785	7	14
19207	8335240	5330-01-078-3985	7	23
19207	8335242	6250-01-141-1543	7	24
19207	8338561	5935-00-833-8561	9	6
			12	6
19207	8338562	5970-00-833-8562	9	7
			12	7
19207	8338564	5940-00-399-6676	9	5

CROSS-REFERENCE INDEXES

PART NUMBER INDEX

CAGEC	PART NUMBER	STOCK NUMBER	FIG	ITEM
19207	8338564	5940-00-399-6676	12	5
19207	8338566	5935-00-572-9180	3	6
			4	4
19207	8338567	5310-00-833-8567	3	5
19207	8376596	5315-00-316-1063	31	24
19207	8376610	3020-00-562-0487	31	35
19207	8376611	3020-00-562-0488	31	34
96906	8376986		38	22
19207	8378661		4	8
19207	8379855	3020-00-319-6011	31	8
19207	8379857	3120-00-701-4995	31	11
19207	8380801		21	4
19207	8380805	2530-00-318-1227	21	10
19207	8380814	1440-01-077-1600	21	5
19207	8380816		21	11
19207	8380817		21	9
19207	8380973		32	5
19207	8380975	5340-00-466-1965	32	3
19207	8386477	5940-00-867-5245	5	5
19207	8387658	5360-01-077-7872	41	21
19207	8389423		0011	9
94222	85-12-120-16		47	8
19207	8689208-1		20	8
			23	2
19207	8689208-2		20	18
			23	19
19207	8689210		BULK	3
19207	8689210-1		23	9
19207	8698438	5340-01-190-5607	37	7
19207	8701268	5935-00-111-6189	10	1
19207	8710672	5365-00-205-5105	15	10
19207	8710673	5310-00-091-9775	15	9
19207	8710676	4710-00-534-2347	16	9
19207	8710680		15	3
19207	8710681		15	3
19207	8710683	5306-00-297-8274	15	16
19207	8710685	5310-00-220-6587	15	17
19207	8710692	2530-00-091-9776	15	6
19207	8710693	5340-01-053-5090	15	2
19207	8710694	2530-00-179-3635	15	2
19207	8710695	3020-00-287-8215	15	8
19207	8710696	5360-00-205-4654	15	18
19207	8710697	5360-00-205-4657	15	19
19207	8710708	2530-00-091-9777	15	4
19207	8710709	4730-00-200-0442	16	10
19207	8710714		15	13
19207	8710716	2530-00-773-9381	15	14
19207	8710718	2530-01-094-7940	15	22
19207	8710719		15	1
19207	8710720		15	1
19207	8710736	3040-00-757-1718	25	11

CROSS-REFERENCE INDEXES

PART NUMBER INDEX

CAGEC	PART NUMBER	STOCK NUMBER	FIG	ITEM
19207	8710741	2530-01-119-1838	25	10
19207	8710742	2530-01-110-4321	25	18
19207	8710743	5330-00-562-1947	25	4
19207	8710744	5340-00-562-1948	25	3
19207	8710746	2530-00-624-0256	13	15
19207	8713240		2	3
19207	8720978	5305-00-322-7348	31	15
19207	8722536		41	18
19207	8722548		41	19
19207	8722815		37	4
19207	8730456	5340-00-157-1396	18	121
19207	8737000	5340-00-970-3258	34	3
19207	8737001	2510-00-971-4753	34	11
19207	8738007		31	5
19207	8741646	6220-00-775-2384	5	3
19207	8741650		5	6
19207	8741651		5	9
19207	8742682		33	4
19207	8742683	5306-00-624-0257	34	20
19207	8742716	4710-01-049-8921	19	8
19207	8742717	4710-01-049-8922	19	4
19207	8742862	5306-00-678-4769	33	6
19207	8744897	5310-00-132-1438	7	27
19207	8744898	5340-01-163-1331	7	30
19207	8758259	2530-00-920-7568	17	2
19207	8758318		14	7
01857	89981	6220-00-338-1086	8	1
19975	89985	6220-00-025-3697	8	6
19975	90070		8	4
19976	90076		8	7
66640	9112001	4730-00-018-9566	31	21
19975	91718		8	5
19975	91719		8	2
19975	91720		8	3
24617	9413509	5310-00-768-0318	13	8
19207	9727644		4	1

CROSS-REFERENCE INDEXES

FIGURE AND ITEM NUMBER INDEX

FIG	ITEM	STOCK NUMBER	CAGEC	PART NUMBER
BULK	1		19207	1926021
BULK	2	4710-00-203-3172	17590	305087-0116
BULK	3		19207	8689210
BULK	4	6145-00-152-6499	81349	M13486-1-5
BULK	5	6145-01-043-7863	81349	M13486/1-10
BULK	6	5510-00-270-6031	97403	13219E0079
KITS			19207	RN13A
1	1		19207	7038789
1	2	5930-00-729-8465	18876	10004823
1	3		19207	10919693
1	4		19207	10919609
1	5	5310-00-596-7691	96906	MS35335-32
1	6		96906	MS24618-41
1	7		96906	MS24621-61
1	8		19207	7002825
1	9	5305-00-147-3238	96906	MS51861-45C
1	10		19207	10919678
1	11	5930-01-114-7608	19207	7096964
2	1	5975-01-195-7621	19207	7264293-2
2	2	5975-01-189-9983	19207	7264292-2
2	3		19207	8713240
2	4		19207	7096965
2	5		19207	503056
2	6	5310-00-809-8533	96906	MS27183-23
2	7		19207	10926021-1
2	8	5925-00-814-8148	19207	7044043
2	8	5925-00-952-8641	52737	P120
2	9	5925-01-205-2679	19207	7044041
2	10	5975-00-152-1075	79466	50810
2	11	5305-00-432-4254	96906	MS51861-69
2	12		19207	501705
2	13	4730-00-196-1505	96906	MS51953-101
2	14	5305-00-900-1115	96906	MS35493-17
2	15	5325-00-174-9038	88044	AN931-12-17
2	16	5325-00-185-0011	96906	MS35489-66
3	1	6220-01-093-4439	96906	MS52125-2
3	2	6220-00-179-4324	19207	11639535
3	3	5330-00-462-0907	19207	11639519-2
3	4	5999-00-057-2929	96906	MS27148-2
3	5	5310-00-833-8567	19207	8338567
3	6	5935-00-572-9180	19207	8338566
3	7		19207	11639520
3	8	6240-00-019-0877	96906	MS15570-1251
3	9	6240-00-044-6914	9690	MS35478-1683
3	10	6240-00-019-3093	96906	MS15570-623
3	11	5310-00-637-9541	16764	110730
3	12	5305-00-115-9526	96906	MS18154-58
4	1		19207	9727644
4	2	6220-00-752-6020	19207	7526020
4	3	5330-00-297-7106	19207	7320658
4	4	5935-00-572-9180	19207	8338566

CROSS-REFERENCE INDEXES

FIGURE AND ITEM NUMBER INDEX

FIG	ITEM	STOCK NUMBER	CAGEC	PART NUMBER
4	5	5305-00-115-9526	96906	MS18154-58
4	6	5310-00-595-7237	96906	MS35333-42
4	7		96906	MS53047-1
4	8		19207	8378661
4	9	6240-00-019-0877	96906	MS15570-1251
4	10	6240-00-044-6914	96906	MS35478-1683
5	1	6220-00-846-9745	96906	MS51302-1
5	2	5305-00-764-0070	96906	MS51959-46
5	3	6220-00-775-2384	19207	8741646
5	4	5330-00-678-9047	73331	5942528
5	5	5940-00-867-5245	19207	8386477
5	6		19207	8741650
5	7	5310-00-514-6674	96906	MS35335-34
5	8	5306-00-050-1238	96906	MS90727-32
5	9		19207	8741651
5	10	6240-00-019-0877	96906	MS15570-1251
6	1	6220-00-577-3434	96906	MS35423-1
6	1	6220-00-577-3435	96906	MS35424-1
6	1	6220-00-726-1916	96906	MS35423-2
6	1	6220-00-727-3288	96906	MS35424-2
6	2	6220-00-752-5992	96906	MS35420-1
6	2	6220-00-752-5993	96906	MS35420-2
6	3	6220-00-729-9295	96906	MS35422-1
6	4	6220-00-299-7425	96906	MS35421-1
6	4	6220-00-299-7426	96906	MS35421-2
6	5	5310-00-596-8169	19207	7526796
6	6	5330-00-353-0959	19207	7526509
6	7	6250-00-371-4018	19207	7526515
6	8	5310-00-045-3296	96906	MS35338-43
6	9	5305-00-984-6214	96906	MS35206-267
6	10	6240-00-019-0877	96906	MS15570-1251
6	11	5305-00-701-5071	96906	MS51959-61
7	1	6220-00-337-7463	96906	MS51073-1
7	2	5330-00-732-0655	19207	7320655
7	3	5310-00-732-0654	19207	7320654
7	4	5310-00-732-0652	16528	7320652
7	5	5305-00-732-0657	19207	7320657
7	6	5930-00-705-7187	56161	10511509
7	7	5360-00-705-7189	19207	7057189
7	8	5355-00-732-0656	73331	5936185
7	9	5310-00-209-0788	77926	A02157-103
7	10	5305-00-984-4989	96906	MS35206-229
7	11	5340-00-732-0642	19207	7320642
7	12	5305-00-737-5694	19207	7320641
7	13	6220-00-796-2241	19207	7962241
7	14	5305-00-633-0785	19207	8335233
7	15	5310-00-045-3299	96906	MS35338-42
7	16	6240-00-295-2668	96906	MS35478-1691
7	17	6250-00-337-7465	19207	7064962
7	18	5325-00-623-0928	24617	5942525
7	19	5340-00-169-4162	19207	7064896

CROSS-REFERENCE INDEXES

FIGURE AND ITEM NUMBER INDEX

FIG	ITEM	STOCK NUMBER	CAGEC	PART NUMBER
7	20	5305-00-889-3002	96906	MS35206-242
7	21	5305-00-984-4988	96906	MS35206-228
7	22	6150-00-055-1751	19207	7064899
7	23	5330-01-078-3985	19207	8335240
7	24	6250-01-141-1543	19207	8335242
7	25	6240-00-019-3093	96906	MS15570-623
7	26		19207	10942115
7	27	5310-00-132-1438	19207	8744897
7	28		19207	7320684
7	29	5330-00-796-2254	19207	7962254
7	30	5340-01-163-1331	19207	8744898
7	31	5330-00-173-4770	19207	7962251
7	32	5935-00-622-4948	19207	7064961
7	33	5305-00-984-6189	96906	MS35206-241
7	34	5305-00-984-4983	96906	MS35206-226
7	35	6220-00-087-9667	19207	7962247
7	36	5340-00-087-9668	19207	7962246
7	37	6220-00-796-2244	19207	7962244
7	38	5330-00-796-2243	19207	7962243
7	39	6220-01-123-1353	19207	12314082
7	40	5330-00-796-2242	19207	7962242
7	41	5930-00-732-0651	19207	7320651
7	42		19207	7034242
7	43	5310-00-271-7454	96906	MS35338-119
7	44		96906	MS24618-42
8	1	6220-00-338-1083	01857	7092279
8	1	6220-00-338-1083	01857	7092279
8	1	6220-00-338-1086	01857	89981
8	2		19975	91719
8	3		19975	91720
8	4		19975	90070
8	5		19975	91718
8	6	6220-00-025-3697	19975	89985
8	6	6220-00-500-3185	19207	8328122
8	7		19976	90076
8	8		19975	145189
8	9		08108	75A115V
9	1	5305-00-068-0502	30076	128720
9	2	5310-00-582-5965	96906	MS35338-44
9	3	5325-00-202-4004	96906	MS35489-64
9	3	5325-00-249-6345	96906	MS35489-69
9	3	5325-00-276-6098	96906	MS35489-78
9	4		19207	7034283
9	5	5940-00-399-6676	19207	8338564
9	6	5935-00-833-8561	19207	8338561
9	7	5970-00-833-8562	19207	8338562
9	8		19207	7060818
9	9	9905-01-050-3055	96906	MS39020-4
9	10		19207	1526499-1
9	11	9905-00-752-4649	96906	MS39020-1
9	12	5940-00-204-8966	96906	MS25036-102

CROSS-REFERENCE INDEXES

FIGURE AND ITEM NUMBER INDEX

FIG	ITEM	STOCK NUMBER	CAGEC	PART NUMBER
9	13	5935-00-846-3883	96906	MS75021-1
9	14	5340-00-080-9853	96906	MS21333-97
9	14	5340-00-809-1492	81348	CMDX2-3PT573036
9	14	5340-00-809-1494	96906	MS21333-105
9	14	5340-00-854-6729	96906	MS21333-103
9	15		96906	MS24618-50
9	15	5305-00-957-2639	96906	MS35191-290
9	15	5305-00-988-3784	96906	MS35191-289
9	16	5310-00-903-8282	96906	MS21083N4
9	17	5310-00-761-6882	96906	MS51967-2
10	1	5935-00-111-6189	19207	8701268
10	2	5310-00-393-6685	19207	7723309
10	3	5999-00-485-8955	77820	10-33646
10	4	5365-00-090-5426	19207	7722333
10	5	5935-00-257-1024	19207	7716683
10	6	5935-00-773-1428	19207	7731428
11	1	5325-00-185-0001	96906	MS35489-46
11	1	5325-00-281-1557	70485	AN931-10-14
11	2		96906	MS51861-67C
11	2	5305-00-267-8952	96906	MS90727-3
11	2	5305-00-988-3784	96906	MS35191-289
11	3	5340-00-809-1492	81348	CMDX2-3PT573036
11	3	5340-00-854-6729	96906	MS21333-103
11	3	5340-00-993-6207	96906	MS21333-99
11	4	5310-00-903-8282	96906	MS21083N4
11	5		19207	10919683
11	6		96906	MS39020-2
11	7		19207	1526499-01
11	8	9905-00-752-4649	96906	MS39020-1
11	9		19207	8389423
12	1		19207	7034091
12	2	9905-00-979-4458	83194	1628
12	3	9905-00-752-4649	96906	MS39020-1
12	4		19207	1526499-1
12	5	5940-00-399-6676	19207	8338564
12	6	5935-00-833-8561	19207	8338561
12	7	5970-00-833-8562	19207	8338562
12	8		19207	7060818
12	9		19207	7096963
12	10		96906	MS39020-2
12	11		19207	7056676-18
12	12		19207	7096960
12	13	9905-00-752-4649	96906	MS39020-1
12	14	9905-00-979-4458	83194	1628
12	15		19207	1526499-38
12	16		19207	7096961
12	17	9905-00-752-4649	96906	MS39020-1
12	18	9905-00-979-4458	83194	1628
12	19		19207	1526499-16
12	20		19207	7096962
12	21		96906	MS39020-2

CROSS-REFERENCE INDEXES

FIGURE AND ITEM NUMBER INDEX

FIG	ITEM	STOCK NUMBER	CAGEC	PART NUMBER
12	22		19207	7056676-8
12	23		19207	10919694
12	24	9905-00-893-3570	81349	M43436-1-3
12	25		19207	M13486-1-10-1
12	26		96906	MS39020-2
13	1		19207	7034108
13	2		19207	7979892
13	3		19207	7034111
13	4		19207	7034122
13	5		19207	7034123
13	6		19207	7015106
13	7		19207	7034065
13	8	5310-00-768-0318	24617	9413509
13	9	5310-00-584-5272	96906	MS35338-48
13	10	5310-00-809-3079	96906	MS27183-19
13	11	5305-00-989-7434	96906	MS35207-263
13	12	5310-00-045-3296	96906	MS35338-43
13	13		19207	7034107
13	14		19207	7034159
13	15	2530-00-624-0256	19207	8710746
14	1	5310-01-110-4242	19207	11663236
14	2	5310-01-040-7465	19207	11663232
14	3	5360-01-037-1083	19207	11663233
14	4	2530-00-162-1986	19207	5705700
14	5	2530-01-092-6445	22337	4B22GG
14	6	5320-00-443-5065	19207	10896748
14	7		19207	8758318
14	8	3120-00-740-9567	19207	7979280
14	9	2530-00-204-3622	78500	1745-E-5
14	10	5310-00-797-9332	19207	7979332
14	11	5315-00-842-3044	96906	MS24665-283
14	12	5360-00-797-9339	19207	7979339
14	13	5315-00-740-9379	19207	7979330
14	14	5360-01-036-8596	19207	11663025
14	15	2530-00-692-6133	78500	A173736H8
14	16	5315-01-031-4458	19207	11663231
14	17	5310-00-595-7237	96906	MS35333-42
14	18	5310-00-732-0559	96906	MS51968-8
14	19	5305-00-724-6772	96906	MS90726-139
14	20	5310-00-275-9460	19207	7207919
14	21	5310-00-584-7888	96906	MS35338-51
14	22	5315-00-461-3835	78500	7979271
14	23	5310-00-897-5940	96906	MS51922-45
15	1		19207	8710719
15	1		19207	8710720
15	2	2530-00-179-3635	19207	8710694
15	2	5340-01-053-5090	19207	8710693
15	3		19207	8710680
15	3		19207	8710681
15	4	2530-00-091-9777	19207	8710708
15	5	3020-00-287-8211	63477	F20321

CROSS-REFERENCE INDEXES

FIGURE AND ITEM NUMBER INDEX

FIG	ITEM	STOCK NUMBER	CAGEC	PART NUMBER
15	6	2530-00-091-9776	19207	8710692
15	7	3120-00-091-9774	63477	FC10937
15	8	3020-00-287-8215	19207	8710695
15	9	5310-00-091-9775	19207	8710673
15	10	5365-00-205-5105	19207	8710672
15	11	5315-00-876-7756	63477	FC19136
15	12		96906	MS1003-1
15	13		19207	8710714
15	14	2530-00-773-9381	19207	8710716
15	15	5320-00-011-9951	96906	MS16536-175
15	16	5306-00-297-8274	19207	8710683
15	17	5310-00-220-6587	19207	8710685
15	18	5360-00-205-4654	19207	8710696
15	19	5360-00-205-4657	19207	8710697
15	20	5315-00-705-4686	63477	FC19500A
15	21	5310-00-897-5940	96906	MS51922-45
15	22		63477	FF20339
15	22	2530-01-094-7940	19207	8710718
15	23	5305-00-724-6772	96906	MS90726-139
16	1	2530-00-776-0966	63477	F56115
16	2	2530-00-737-3260	19207	7373260
16	3	5310-00-407-9566	96906	MS35338-45
16	4	5306-00-225-8499	96906	MS90725-34
16	5	4710-00-795-0544	63477	FD20333
16	6	5365-00-274-4544	19207	5298653
16	7	4730-00-419-9425	19207	7745464
16	8	5310-00-741-2088	19207	7412088
16	9	4710-00-534-2347	19207	8710676
16	10	4730-00-200-0442	19207	8710709
16	11	4730-00-069-1186	81343	6-4 120102BA
17	1	2530-00-272-8106	61361	X10710
17	2	2530-00-920-7568	19207	8758259
17	3		63477	FD-6145
17	4	2530-00-278-6555	76005	FC11589
17	5	5310-00-275-6635	19207	5214539
17	6	4730-00-528-2743	03776	5282743
17	7	5310-00-209-1761	19207	5160323
17	8	4730-00-516-7419	19207	5167419
17	9	5305-00-115-9526	96906	MS18154-58
17	10	5310-00-637-9541	16764	110730
17	11	5340-00-656-4895	78500	2797E5
18	1	5310-00-732-0558	96906	MS51967-8
18	2	5310-00-637-9541	16764	110730
18	3	5305-00-269-2803	96906	MS90726-60
18	4	5305-00-984-6215	96906	MS35206-268
18	5	4730-00-908-3193	96906	MS35842-12
18	6	4710-00-511-1692	23705	A298322
18	7	2530-00-278-2243	19207	8332086
18	8	4730-00-773-2163	63477	7979691
18	9	5330-00-737-3354	19207	7373354
18	10	5365-00-289-4926	19207	5215673

FIGURE AND ITEM NUMBER INDEX

	ITEM	FIG	CAGEC	PART NUMBER
18	11	5330-00-930-5292	19207	5156636
18	12	5340-00-157-1396	19207	8730456
18	13	4720-00-809-2750	96906	MS521301A204120
18	14	5310-00-934-9758	96906	MS35649-202
19	1	4730-00-278-8873	19207	5186963
19	2	5330-00-930-5292	19207	5156636
19	3	4720-00-740-9331	19207	7409331
19	4	4710-01-049-8922	19207	8742717
19	5		19207	7034067
19	6	5310-00-732-0558	96906	MS51967-8
19	7	5310-00-637-9541	16764	110730
19	8	4710-01-049-8921	19207	8742716
20	1	2530-00-137-9235	19207	7411021
20	2	4730-00-595-0083	96906	MS35746-1
20	3	5330-00-090-2128	96906	MS35748-1
20	4	4730-00-249-3935	96906	MS39231-4
20	5	4730-00-244-9848	19207	5228623
20	6	9905-00-999-7369	96906	MS53007-2
20	6	9905-00-999-7370	96906	MS53007-1
20	7	4730-00-069-1186	79146	HC-168-6X4
20	8		19207	8689208-1
20	9	4730-00-293-7108	03533	307-3
20	10	4730-00-278-8825	96906	MS39196-3
20	11		19207	2033172-420
20	12	5325-00-249-6345	96906	MS35489-69
20	13	4730-00-187-7612	96906	MS39233-4
20	14	4720-00-933-6956	19207	7973340
20	15	5310-00-761-6882	96906	MS51967-2
20	16	5310-00-582-5965	96906	MS35338-44
20	17	5306-00-797-9296	19207	7979296
20	18		19207	8689208-2
20	19	4730-00-293-7108	16662	AC2511
20	20	4730-00-278-8825	78550	200360
20	21		19207	2033172-15
21	1	2530-00-142-6045	19207	11668361
21	2	5310-00-732-0559	96906	MS51968-8
21	3	5310-00-637-9541	16764	110730
21	4		19207	8380801
21	5	1440-01-077-1600	19207	8380814
21	6		19207	501212
21	7	5360-00-780-0508	40342	N10673A
21	8	5305-00-269-2803	96906	MS90726-60
21	9		19207	8380817
21	10	2530-00-318-1227	19207	8380805
21	11		19207	8380816
22	1	4730-00-223-9256	88044	AN910-3
22	2	2530-00-797-9295	23705	A298749
22	3	4730-00-221-2136	96906	MS20913-1S
22	4	4730-00-580-8457	06853	235091
22	5	5330-00-285-5123	91340	M4X509
22	6	5360-00-706-9054	06853	235093

CROSS-REFERENCE INDEXES

FIGURE AND ITEM NUMBER INDEX

FIG	ITEM	STOCK NUMBER	CAGEC	PART NUMBER
22	7	2530-00-741-5748	40342	N-12970-A
22	8	2940-00-741-1081	23705	N12971
22	9	5310-00-679-3606	40342	N12972
23	1		81343	6-4 120202BA(LON G NUT)
23	2		19207	8689208-1
23	3	4730-00-293-7108	16662	AC2511
23	4	4730-00-278-8825	78550	200360
23	5		19207	2033172-18
23	6	4730-00-069-1186	81343	6-4 120102BA
23	7	4730-00-069-1186	81343	6-4 120102BA
23	8	4730-00-142-3075	40342	41X320
23	9		19207	8689210-1
23	10	4730-00-054-2571	81343	8 120115B
23	11	4730-00-054-2572	81343	8 120111B
23	12		19207	2775529-60
23	13	5305-00-964-0503	96906	MS90728-78
23	14		19207	7745288
23	15	2530-00-741-1078	23705	A298748
23	16	5305-00-115-9526	96906	MS18154-58
23	17	5310-00-637-9541	16764	110730
23	18	5310-00-732-0558	96906	MS51967-8
23	19		19207	8689208-2
23	20	4730-00-293-7108	16662	AC2511
23	21	4730-00-278-8825	78550	200360
23	22		19207	2033172-23
23	23	4820-00-849-1220	96906	MS35782-5
23	24	5305-00-068-0511	96906	MS90728-62
23	25	2530-00-118-8589	96906	MS53004-1
24	1	2530-00-738-9620	09386	65890
24	2	2530-00-738-9061	96906	MS53045-3
25	1	5306-00-225-8496	96906	MS90725-31
25	2	5310-00-407-9566	96906	MS35338-45
25	3	5340-00-562-1948	19207	8710744
25	4	5330-00-562-1947	19207	8710743
25	5	5310-00-220-2665	19207	10896720
25	6	5310-00-752-1650	78500	1229G969
25	7	5310-00-292-7851	78500	1229D862
25	8	2530-00-359-1162	96906	MS53068-2
25	8	2530-00-693-1029	96906	MS53068-1
25	9	5306-00-383-4957	96906	MS51946-2
25	9	5306-00-733-9239	96906	MS51946-1
25	10	2530-01-119-1838	19207	8710741
25	10	2530-01-145-6819	71282	71244D
25	11	3040-00-757-1718	19207	8710736
25	12	3110-00-100-5951	96906	MS19081-112
25	13	3110-00-689-8250	21450	712288
25	14	5310-00-897-5940	96906	MS51922-45
25	15	5310-00-209-0965	96906	MS35338-47
25	16	5340-00-211-6129	78500	1107F84
25	17	2530-00-093-5597	78500	3219X2052

CROSS-REFERENCE INDEXES

FIGURE AND ITEM NUMBER INDEX

FIG	ITEM	STOCK NUMBER	CAGEC	PART NUMBER
25	18	2530-01-110-4321	19207	8710742
25	19	5305-00-724-6772	96906	MS90726-139
25	20	5330-00-740-9550	19207	7979349
25	21	2590-00-740-9553	78500	1199F1436
26	1	2610-00-262-8677	81348	ZZ-T-381M/GROUP3 /9.00-20/D/TBCC
26	2		81348	ZZ-I-550/900-20/ TR175A/ONCTR
26	3	2640-00-810-5861	96906	MS51377-1
26	4	2640-00-050-1235	34623	648487
26	5	2640-00-147-5160	73842	20N
27	1		19207	10919601
28	1	5305-00-432-4254	96906	MS51861-69
28	2		19207	7034335
28	3	5310-00-088-1251	96906	MS51922-1
28	4	5305-00-225-3843	96906	MS90728-8
28	5		19207	7034025
28	6	5325-01-258-2005	19207	7034027
28	7		19207	7034425
28	8	5310-00-809-4061	96906	MS27183-15
28	9		19207	7034026
28	9		19207	7034424
28	10	4030-00-350-8968	19207	506882
28	11		19207	10919666
28	12		19207	42-C-15120-210
28	13	5305-00-844-9888	96906	MS24621-15
28	14	5310-00-082-1404	96906	MS27183-6
28	15		19207	10919621
28	16	5305-00-432-4172	96906	MS51861-37
29	1		19207	10922114
29	2		19207	10922113
29	3	5320-00-285-1025	81829	T40
29	4	3040-00-752-1156	81216	T39
29	5	5306-01-102-7336	19207	7418891
29	6	5310-00-017-9721	19207	7418892
29	7	4010-00-809-6431	19207	7739705
29	8	5310-00-851-2674	96906	MS35691-1
29	9	5310-00-582-5965	96906	MS35338-44
29	10	2510-00-168-2242	19207	7739707
29	11	5306-00-017-9722	19207	7739666
29	12	5315-00-234-1664	96906	MS24665-495
29	13	3040-01-157-6315	19207	7739703
29	14	5305-00-726-2544	96906	MS90727-161
29	15	5310-00-982-5009	96906	MS21045-10
30	1	2510-00-706-7973	19207	7067973
31	1	2590-00-690-1588	80837	R1556
31	1	2590-00-690-1589	80837	L1540
31	2	5305-00-680-9197	19207	593599
31	3	5340-00-893-4100	19207	7974887
31	4	5330-00-513-9933	80837	J3203G
31	5		19207	8738007

CROSS-REFERENCE INDEXES

FIGURE AND ITEM NUMBER INDEX

FIG	ITEM	STOCK NUMBER	CAGEC	PART NUMBER
31	6	3020-00-701-4980	80837	J344-1F
31	7	5310-00-220-6848	66640	27D252
31	8	3020-00-319-6011	19207	8379855
31	9	3110-00-100-6004	66821	K12528
31	10	3120-00-661-3922	19207	542044
31	11	3120-00-701-4995	19207	8379857
31	12		19207	7015115
31	12		19207	7015116
31	13	5315-00-515-0495	80837	J3237
31	14	3110-00-117-0759	96906	MS17169-12
31	15	5305-00-322-7348	19207	8720978
31	16	5310-00-586-1767	80837	J3265
31	17	2590-00-690-1586	80837	J3269-13
31	18	5305-00-071-2081	96906	MS90728-125
31	19	5310-00-809-3079	96906	MS27183-19
31	20	2590-01-091-7620	19207	7365938
31	21	4730-00-018-9566	66640	9112001
31	22	2590-00-030-6943	80837	J1386
31	23	5310-00-225-6993	96906	MS51922-33
31	24	5315-00-316-1063	19207	8376596
31	25	4730-00-050-4208	96906	MS15003-1
31	26	2590-00-510-8829	80837	J-1276
31	27	5365-00-678-6872	80837	J1206A
31	28	5340-00-510-8828	80837	J3288
31	29	5315-00-014-2521	61038	M21872
31	30	3040-00-678-4081	80837	J-3207-1
31	31	5315-00-616-5530	96906	MS35756-15
31	32	3040-00-670-5333	80837	J3206
31	33	5315-00-014-2543	96906	MS35671-64
31	34	3020-00-562-0488	19207	8376611
31	35	3020-00-562-0487	19207	8376610
31	36	3110-00-995-3855	96906	MS19059-1019
31	37	5360-00-679-5658	80837	J3205
32	1		96906	MS90726-111
32	2	5310-00-584-5272	96906	MS35338-48
32	3	5340-00-466-1965	19207	8380975
32	4		19207	7017306
32	5		19207	8380973
32	6	5310-00-842-1211	96906	MS35692-17
32	7		19207	7014984
32	8	5305-00-821-3869	96906	MS90728-65
32	9	5305-00-922-7994	96906	MS90728-189
32	10		19207	7034387-1
32	11	5310-00-877-5795	96906	MS21044N8
32	12		19207	10919626-1
32	13		19207	7034431
32	14	5305-00-725-4183	96906	MS90726-113
32	15	5310-00-269-4040	96906	MS51922-49
32	16		96906	MS90725-170
32	17	5305-00-269-3217	96906	MS90725-67
32	18	5310-00-080-6004	96906	MS27183-14

CROSS-REFERENCE INDEXES

FIGURE AND ITEM NUMBER INDEX

FIG	ITEM	STOCK NUMBER	CAGEC	PART NUMBER
32	19	5340-00-177-9931	19207	11640134
32	20	5310-00-087-4652	96906	MS51922-17
32	21	5305-00-726-2550	96906	MS90727-163
33	1	5340-00-562-1943	19207	7974918
33	2	5310-00-798-1265	19207	7979366
33	3	5310-00-809-8541	96906	MS27183-27
33	4		19207	8742682
33	5	2510-00-624-0254	23705	336837
33	6	5306-00-678-4769	19207	8742862
34	1		23705	565222
34	2	5310-00-562-1955	19207	7974921
34	3	5340-00-970-3258	19207	8737000
34	4	5310-00-424-1456	19207	7349029
34	5	5365-00-350-0155	23705	563400
34	6	5310-00-424-1452	19207	7349028
34	7		96906	MS90726-178
34	8	5310-00-877-5795	96906	MS21044N8
34	9	5305-00-725-4183	96906	MS90726-113
34	10		81348	102950
34	11	2510-00-971-4753	19207	8737001
34	12		96906	MS90726-111
34	13	5310-00-763-8905	96906	MS51968-20
34	14	5310-00-985-0782	96906	MS27151-28
34	15	5365-00-624-0255	19207	7974917
34	16	2530-00-752-0513	19207	7520513
34	16	2530-00-770-7070	19207	7707070
34	17	5315-00-298-1481	96906	MS24665-357
34	18	5310-00-842-7783	96906	MS35692-53
34	19	5315-00-562-1956	19207	7974919
34	20	5306-00-624-0257	19207	8742683
35	1		19207	7034385
35	2	5320-00-973-7912	96906	MS24662-152
35	3		19207	7096946
35	4		19207	7096945
35	5	2540-00-179-5583	19207	7264735
35	6	5315-00-839-5820	96906	MS24665-134
35	7		19207	10871578
35	8	5340-00-389-0318	19207	7264634
35	9	5340-00-466-1978	19220	5607-51
35	10	5305-00-432-4203	96906	MS51861-47
35	11	5305-00-052-7492	96906	MS24629-61
35	12		19207	10919681-34
35	13		19207	10919691
35	14	5305-00-052-8241	96906	MS24617-55
35	15		19207	7034417
35	16		19207	7034414
35	17		19207	10919698
35	18		19207	10919684
35	19		96906	MS24615-26
35	20	5305-00-432-8222	96906	MS51862-37
35	21		19207	10919597

CROSS-REFERENCE INDEXES

FIGURE AND ITEM NUMBER INDEX

FIG	ITEM	STOCK NUMBER	CAGEC	PART NUMBER
35	22		19207	10919701
35	23	5320-00-117-5855	96906	MS20470D6-8
35	24	5305-00-476-7369	96906	MS51862-25
35	25		19207	10919697
35	26	5340-00-406-1550	19207	7264736
35	27		96906	MS24662-154
35	28	5305-00-180-1991	96906	MS35493-78
36	1		19207	7003081
36	2	5310-00-984-3806	96906	MS51922-9
36	3	6220-00-040-2094	19207	8328353
36	4		19207	7092397
36	5	5310-00-934-9757	96906	MS35649-282
36	6	5310-00-596-7693	96906	MS35335-31
36	7	5310-00-809-8544	96906	MS27183-7
36	8	5310-00-934-9751	96906	MS35650-3C2
36	9	5310-00-596-7691	96906	MS35335-32
36	10	5310-00-809-8546	96906	MS27183-8
36	11	9540-00-463-4500	19207	7092451
36	12	5305-00-993-1848	96906	MS35207-265
36	13	5305-00-984-6198	96906	MS35206-250
36	14		19207	7034353
36	15	5306-01-075-8519	96906	MS90725-36
36	16		96906	MS24619-25
36	17	2510-01-115-2278	19207	7092452
36	18		96906	MS24621-45
36	19	5320-00-720-6524	96906	MS20426D6-7
36	20	5306-01-075-8519	96906	MS90725-36
36	21	5310-00-984-3806	96906	MS51922-9
36	22	5305-00-432-4203	96906	MS51861-47
36	23		19207	10919596
36	24	5305-00-855-0836	96906	MS24615-38
37	1	5305-00-855-0836	96906	MS24615-38
37	2	5305-00-432-4205	96906	MS51861-49
37	3		19207	10919593
37	4		19207	8722815
37	5	5340-01-150-1023	19207	7034278
37	5	5340-01-150-1025	19207	7034352
37	6	5340-01-150-1024	19207	7010222
37	7	5340-01-190-5607	19207	8698438
37	8	5340-00-503-5423	19220	5658-1
37	9		19207	7015126
37	10	5310-00-209-0786	96906	MS35335-33
37	11	5305-00-688-1686	96906	MS35223-73
37	12		19207	7015127
37	13		19207	10919568
37	14	5305-00-052-6917	96906	MS24629-50
37	15	5365-01-272-5486	19207	7096954
37	16	2540-01-150-1037	19207	7034006
37	16	2540-01-150-1038	19207	10919677
37	17	5305-00-855-0957	96906	MS24629-46
37	18	2540-01-150-1026	19207	8328279

CROSS-REFERENCE INDEXES

FIGURE AND ITEM NUMBER INDEX

FIG	ITEM	STOCK NUMBER	CAGEC	PART NUMBER
37	19	5305-00-052-7492	96906	MS24629-61
37	20		96906	MS24662-154
37	21	5305-00-432-4203	96906	MS51861-47
37	22		19207	7096945
37	23	5320-00-973-7912	96906	MS24662-152
37	24		19207	7096946
37	25		19207	7034351
37	26		96906	MS24662-156
37	27		19207	10919699
37	28		19207	10919698
38	1		96906	8328353
38	2	5310-00-984-3806	96906	MS51922-9
38	3		19207	7003081
38	4	5306-01-075-8519	96906	MS90725-36
38	5		19207	7034353
38	6	5320-00-720-6524	96906	MS20426D6-7
38	7		96906	MS24621-45
38	8	9540-00-463-4500	19207	7092451
38	9		96906	MS24619-25
38	10	5305-00-984-6198	96906	MS35206-250
38	11	5305-00-993-1848	96906	MS35207-265
38	12	2510-01-115-2278	19207	7092452
38	13	5310-00-809-8546	96906	MS27183-8
38	14	5310-00-596-7691	96906	MS35335-32
38	15	5310-00-934-9751	96906	MS35650-302
38	16	5310-00-934-9757	96906	MS35649-282
38	17	5310-00-596-7693	96906	MS35335-31
38	18	5310-00-809-8544	96906	MS27183-7
38	19		19207	7092397
38	20	5310-00-984-3806	96906	MS51922-9
38	21	5306-01-075-8519	96906	MS90725-36
38	22		96906	8376986
38	23	5320-00-973-7912	96906	MS24662-152
38	24		19207	10919588
38	25	5305-00-483-0552	96906	MS51862-40
38	26	5305-00-102-2966	96906	MS35494-85
39	1		19207	10919681
39	1		19207	7034030
39	2	5310-00-761-6882	96906	MS51967-2
39	3	5310-00-582-5965	96906	MS35338-44
39	4		19207	7032059
39	5	2540-01-258-2054	19207	7034070
39	6	5305-00-068-0502	30076	128720
39	7		19207	7034060
39	8	5315-00-236-8359	96906	MS24665-370
40	1	2510-01-286-3418	19207	7015121
40	2		19207	7015123
40	3		19207	8328326
40	4		19207	10896800
40	5		19207	7015122
40	6		19207	10919692

CROSS-REFERENCE INDEXES

FIGURE AND STOCK NUMBER INDEX

FIG	ITEM	STOCK NUMBER	CAGEC	PART NUMBER
40	7	5305-00-432-4172	96906	MS51861-37
40	8	5670-00-449-5071	19554	B42-42
40	9	5305-00-432-4203	96906	MS51861-47
40	10		19207	7096945
40	11		19207	7096946
41	1	5305-00-432-4203	96906	MS51861-47
41	2		19207	7034404
41	3	5320-00-117-5855	96906	MS20470D6-8
41	4	5320-00-117-5853	96906	MS20470D6-6
41	5		19207	7096944
41	6	5310-00-934-9751	96906	MS35650-3C2
41	7	5310-00-596-7691	96906	MS35335-32
41	8	5310-00-809-8546	96906	MS27183-8
41	9	5305-00-993-1848	96906	MS35207-265
41	10	9540-00-463-4500	19207	7092451
41	11	5310-00-934-9757	96906	MS35649-282
41	12	5310-00-596-7693	96906	MS35335-31
41	13	5310-00-809-8544	96906	MS27183-7
41	14	5305-00-984-6198	96906	MS35206-250
41	15	6220-00-040-2094	19207	8328353
41	16		19207	10872314
41	17		19207	10872313
41	18		19207	8722536
41	19		19207	8722548
41	20		19207	204923
41	21	5360-01-077-7872	19207	8387658
41	22	2510-01-115-2278	19207	7092452
42	1	5320-00-837-5017	96906	MS20470D6-7
42	2		19207	7034012
42	3	5320-00-117-5856	96906	MS20470D6-9
42	4		19207	585794
42	5	5320-00-117-5855	96906	MS20470D6-8
42	6		19207	506889
42	7	5305-00-988-1725	96906	MS35206-281
42	8	5310-00-809-4058	96906	MS27183-10
42	9	5310-00-061-4650	96906	MS51943-31
42	10		19207	586468
42	11		19207	7034398
42	12		19207	7034397
42	13		19207	7034394
42	14		19207	7034395
42	15	5320-00-837-5017	96906	MS20470D6-7
42	16		19207	7034404
43	1		19207	7034274
43	2		19207	7015109
43	3		19207	7034292
43	4		19207	7034084
43	5	5310-00-877-5797	96906	MS21044N3
43	6	5340-00-444-6468	06004	ZLA1008-13
43	7	5305-00-989-7434	96906	MS35207-263
43	8	5305-00-225-3843	96906	MS90728-8

CROSS-REFERENCE INDEXES

FIGURE AND ITEM NUMBER INDEX

FIG	ITEM	STOCK NUMBER	CAGEC	PART NUMBER
43	9	5310-00-682-5930	96906	MS35340-44
43	10	5310-00-761-6882	96906	MS51967-2
44	1		19207	2706031-01
44	2		19207	176431
44	4	5310-00-984-3806	96906	MS51922-9
44	5	5340-01-258-2015	19207	7034406
44	6	5340-01-258-2007	19207	7034405
45	1	9905-00-202-3639	96906	MS35387-2
45	1	9905-00-205-2795	96906	MS35387-1
45	2	5305-00-052-6921	96906	MS24629-57
46	1	5305-00-958-5248	96906	MS35190-293
46	2		19207	10919690
46	3	5305-00-958-6073	96906	MS35190-309
46	3	5310-00-809-4061	96906	MS27183-15
46	4	5315-00-839-5821	96906	MS24665-351
46	5		19207	7034050
46	6	5315-00-775-3912	19207	7753912
46	7		19207	10919689
46	8	5310-00-088-1251	96906	MS51922-1
47	1		19207	11589752
47	1	9905-00-703-4105	19207	7034105
47	2	5305-00-883-0628	89346	111633
47	3	9905-01-189-6443	19207	10919730
47	4	5305-00-901-2101	96906	MS35493-224
47	4	5305-00-901-2101	96906	MS35493-224
47	5	9905-00-702-7265	19207	7034229
47	6	9905-00-706-2310	19207	7034081
47	4	9905-00-690-2672	19207	7034099
47	2		94222	85-12-120-16
47	9	5330-00-584-0266	96906	MS28775-010
47	10	9905-00-690-1829	19207	7034224
47	11	9905-01-189-6444	19207	10919729
47	12	9905-01-194-9909	19207	10919731
47	13	9905-01-189-6442	19207	10919732
47	14	9905-00-282-7489	19207	7979373
47	15	9905-00-690-1828	19207	7034234

APPENDIX G

ILLUSTRATED LIST OF MANUFACTURED ITEMS

Section I. INTRODUCTION

This appendix includes complete instructions for making items authorized to be manufactured or fabricated at Organizational and Direct Support Maintenance levels.

A part number index in alphanumeric order is provided for cross-referencing the part number of the item to be manufactured to the figure which covers fabrication criteria.

All bulk materials needed for manufacture of an item are listed by part number or specification number in a tabular list on the illustration.

(1) ITEM NUMBER	(2) LEVEL	(3) NATIONAL STOCK NUMBER	(4) DESCRIPTION (FSCM)	(5) U/M
1	F	7034091	24-volt wire harness, switch-to-domelights (19207)	G-2
2	F	7034283	24-volt wire harness, main (19207)	G-2
3	F	7096960	110-volt cable assembly, blackout switch-to-rear, door operated, switch (19207)	G-3
4	F	7096961	110-volt cable assembly, blackout switch-to-rear, manual operated, switch (19207)	G-3
5	F	7096962	110-volt cable assembly, main circuit breaker-to-terminal block (19207)	G-3
6	F	7096963	110-volt cable assembly, main circuit breaker-to-branch circuit breakers (19207)	G-4
7	F	10919694	110-volt wire harness, connector-to-main circuit breakers (19207)	G-4
8	O	10926021-1	Conduit assembly, junction boxes-to-wall receptacle base (19207)	G-4
9	F	10910683	110-volt wire harness, switches-to-domelights (19207)	G-5
10	O		Air Hose Assemblies	G-6
11	F	5510-00-270-6031	Deck, Wood Laminated	G-7

Section II. MANUFACTURED ITEMS ILLUSTRATIONS

ITEM 1.

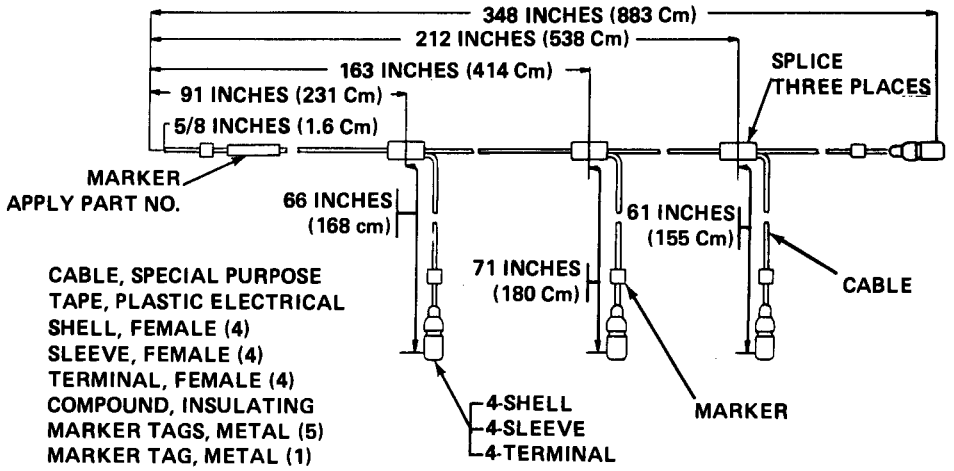

NOTES:

FABRICATE FROM:

a.	P/N	MI3468/1-5	CABLE, SPECIAL PURPOSE
b.	NSN	5970-00-134-2002	TAPE, PLASTIC ELECTRICAL
c.	NSN	5935-00-833-8561	SHELL, FEMALE (4)
d.	NSN	5970-00-833-8562	SLEEVE, FEMALE (4)
e.	NSN	5940-00-854-4430	TERMINAL, FEMALE (4)
f.	NSN	5970-00-900-3046	COMPOUND, INSULATING
g.	P/N	MS39020-1	MARKER TAGS, METAL (5)
h.	P/N	MS39020-2	MARKER TAG, METAL (1)

SEE SCHOMATIC (FOI) FOR MARKER NUMBERS

ITEM 2.

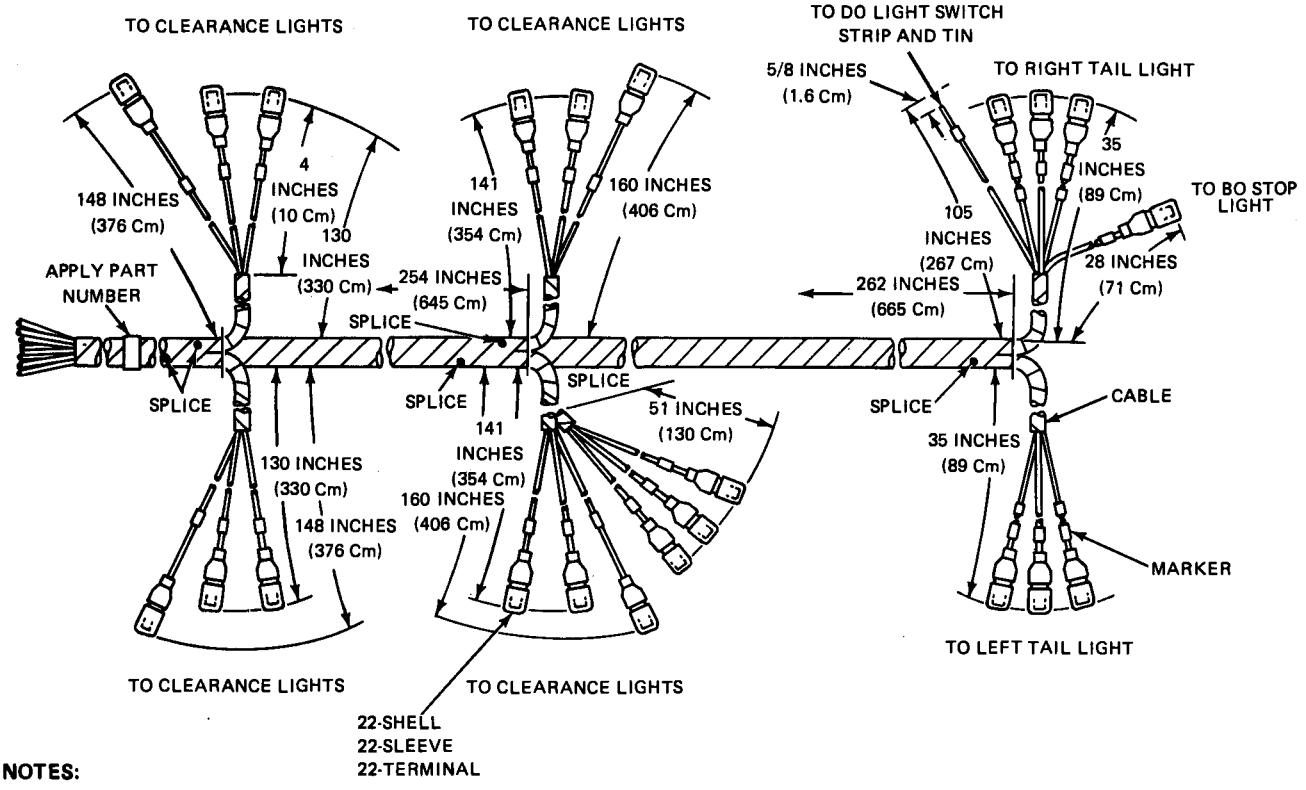

NOTES:

FABRICATE FROM:

a.	P/N	MS13468/1-5	CABLE, SPECIAL PURPOSE
b.	NSN	5970-00-184-2002	TAPE, PLASTIC ELECTRICAL
c.	NSN	5935-00-833-8561	SHELL, FEMALE (22)
d.	NSN	5970-00-833-8562	SLEEVE, FEMALE (22)
e.	NSN	5940-00-854-4430	TERMINAL, FEMALE (22)
f.	NSN	5970-00-900-3046	COMPOUND, INSULATING
g.	P/N	MS39020-1	MARKER TAGS, METAL (19)
h.	P/N	MS39020-4	MARKER TAG, METAL (1)

TA231390

Section II. MANUFACTURED ITEMS ILLUSTRATIONS - CONTINUED

ITEM 3.

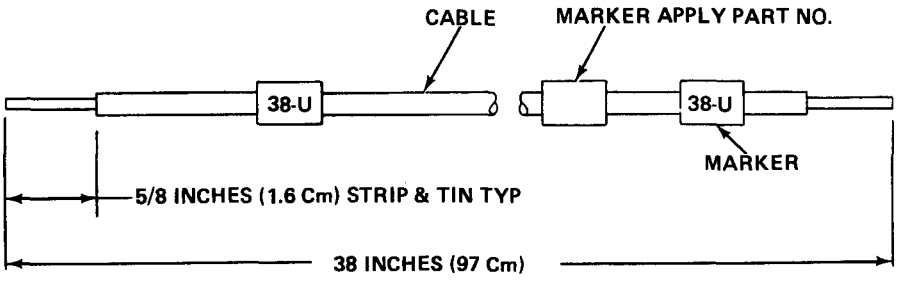

NOTES:

FABRICATE FROM:

a.	NSN	6145-00-152-6499	CABLE, SPECIAL PURPOSE
b.	P/N	MS39020-1	MARKER TAGS, METAL (2)
c.	P/N	MS39020-2	MARKER TAG, METAL (1)

ITEM 4.

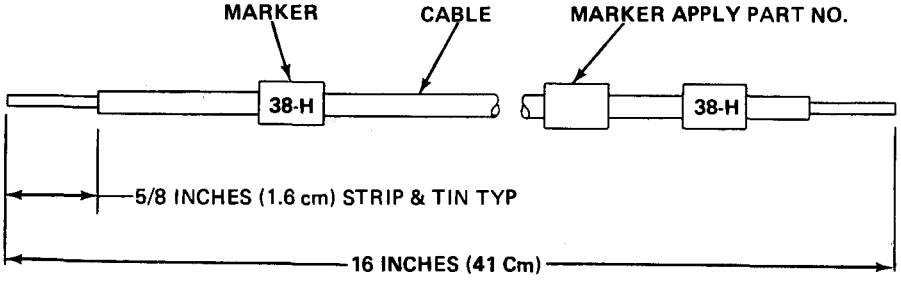

NOTES:

FABRICATE FROM:

a.	NSN	6145-00-152-6499	CABLE, SPECIAL PURPOSE
b.	P/N	MS39020-1	MARKER TAGS, METAL (2)
c.	P/N	MS39020-2	MARKER TAG, METAL (1)

ITEM 5.

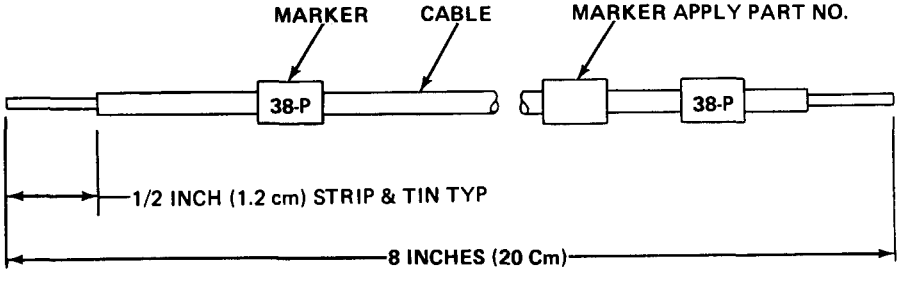

NOTES:

FABRICATE FROM:

a.	NSN	6145-00-152-6499	CABLE, SPECIAL PURPOSE
b.	P/N	MS39020-1	MARKER TAGS, METAL (2)
c.	P/N	MS39020-2	MARKER TAG, METAL (1)

TA231391

Section II. MANUFACTURED ITEMS ILLUSTRATIONS - CONTINUED

ITEM 6.

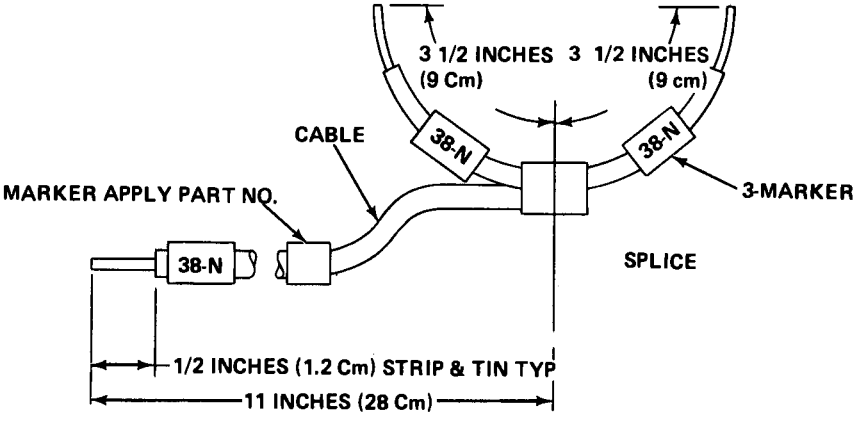

NOTES:

FABRICATE FROM:

a.	NSN	6145-00-152-6499	CABLE, SPECIAL PURPOSE
b.	P/N	MS39020-1	MARKER TAGS, METAL (3)
c.	P/N	MS39020-2	MARKER TAG, METAL (1)

ITEM 7.

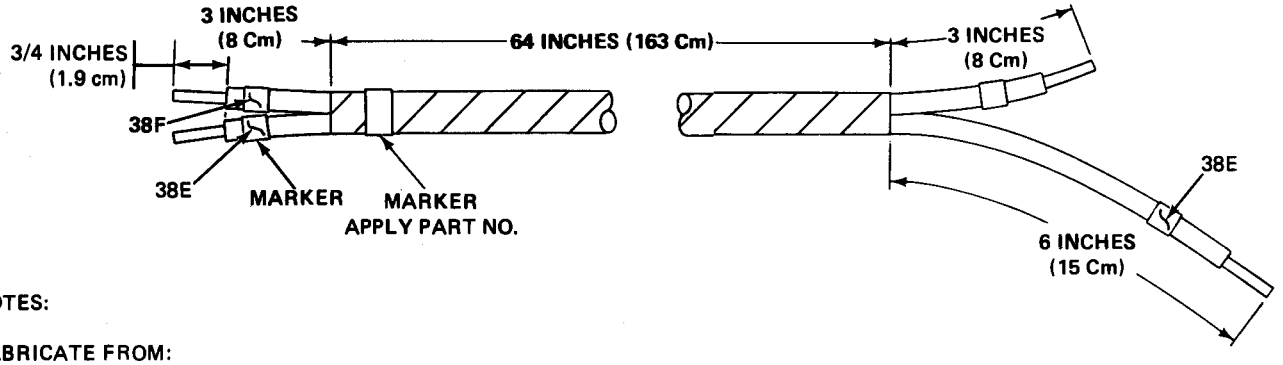

NOTES:

FABRICATE FROM:

a.	NSN	6145-00-152-6499	CABLE, SPECIAL PURPOSE
b.	NSN	5970-00-184-2002	TAPE, PLASTIC ELECTRICAL
c.	P/N	MS39020-1	MARKER TAGS, METAL (4)
d.	P/N	MS39020-2	MARKER TAG, METAL (1)

ITEM 8

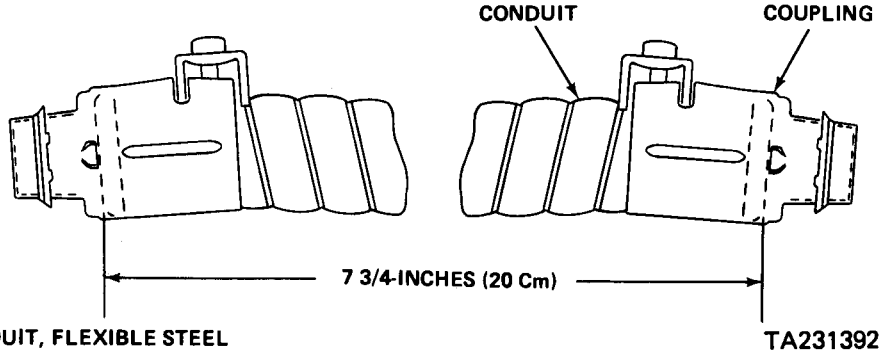

NOTES:

FABRICATE FROM:

a.	P/N	10926021	CONDUIT, FLEXIBLE STEEL
b.	P/N	501705	COUPLING, CONDUIT (2)

TA231392

Section II. MANUFACTURED ITEMS ILLUSTRATIONS - CONTINUED

ITEM 9.

NOTES:

FABRICATE FROM:

a. NSN 6145-00-152-6499 CABLE, SPECIAL PURPOSE
b. NSN 5970-00-184-2002 TAPE, PLASTIC ELECTRICAL
c. P/N MS39020-1 MARKER TAGS, METAL (31)
d. P/N MS39020-2 MARKER TAG, METAL (1)

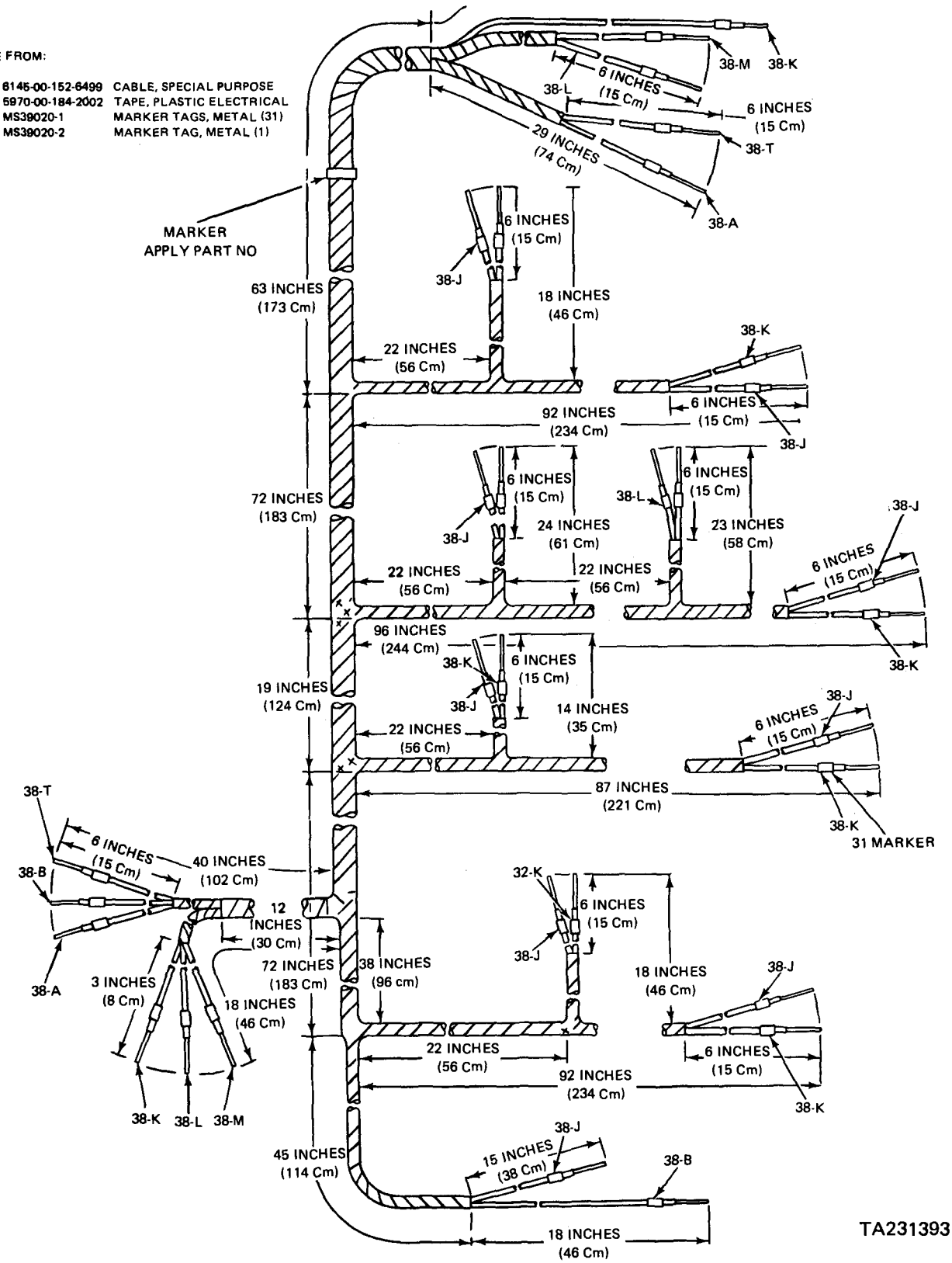

TA231393

Section II. MANUFACTURED ITEMS ILLUSTRATIONS - CONTINUED

ITEM 10.

NOTE

Refer to Air Line Repair procedure (page 4-124) for air line assembly instructions.

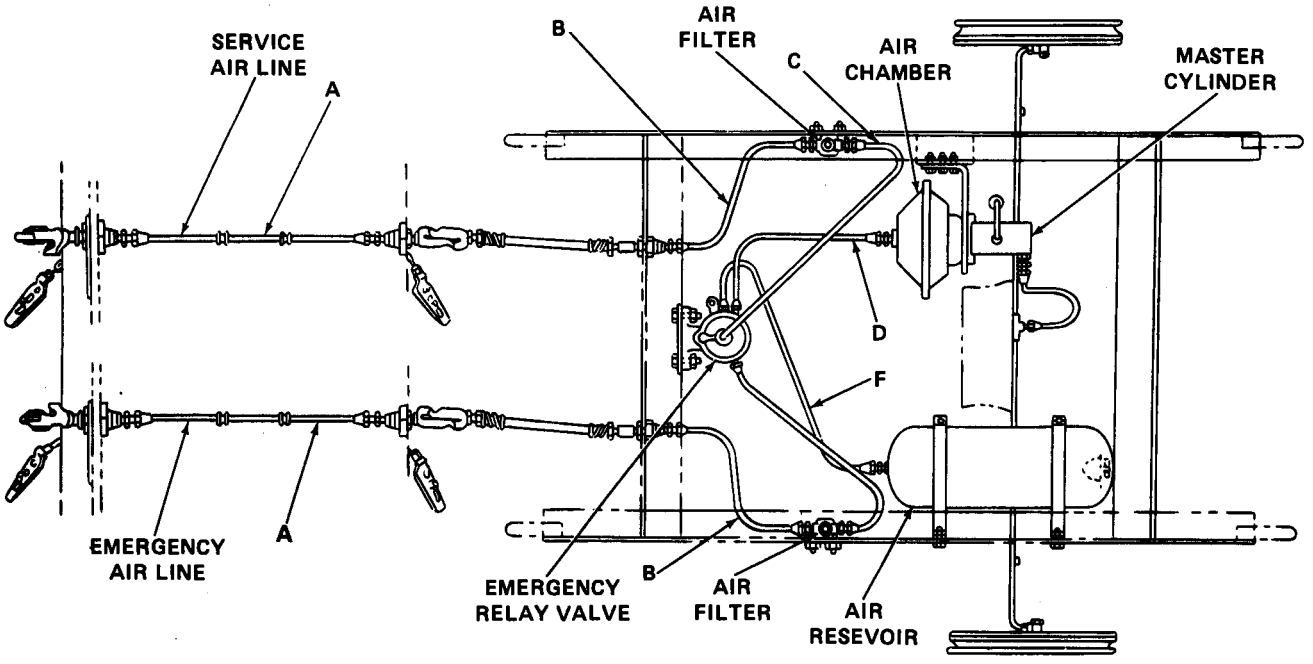

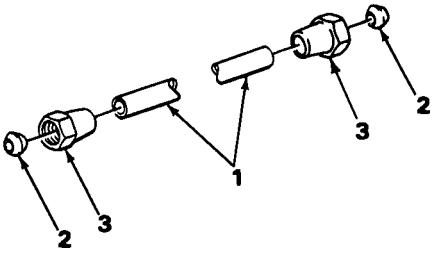

NOTES:

THE DIMENSIONS ARE GIVEN FOR EACH HOSE ASSEMBLY, LENGTHS INCLUDE ONLY THE METALLIC HOSE AND NOT THE FILLINGS. BEND AS NECESSARY.

a. FABRICATE HOSE ASSEMBLIES A THRU E FROM:

(1)	NSN	4710-00-203-3172	HOSE, METALLIC
	HOSE ASSEMBLIES		(A) 35 FEET
			(B) 1 FOOT 3 INCHES
			(C) 1 FOOT 9 INCHES
			(D) 1 FOOT 6 INCHES
			(E) 1 FOOT 6 INCHES
(2)	NSN	4730-00-293-7108	SLEEVE, COMPRESSION
(3)	NSN	4730-09-278-8825	NUT, TUBE

b. FABRICATE HOSE ASSEMBLY F FROM:

(1)	NSN	4710-00-277-5529	HOSE, METALLIC 5 FEET
(2)	NSN	4730-00-054-2571	SLEEVE, COMPRESSION
(3)	NSN	4730-00-054-2572	NUT, TUBE

TA231394

Section II. MANUFACTURED ITEMS ILLUSTRATIONS - CONTINUED

ITEM 11

NOTE

Refer to Deck Repair procedure (page 5-91) for dimensions and fabrication instructions.

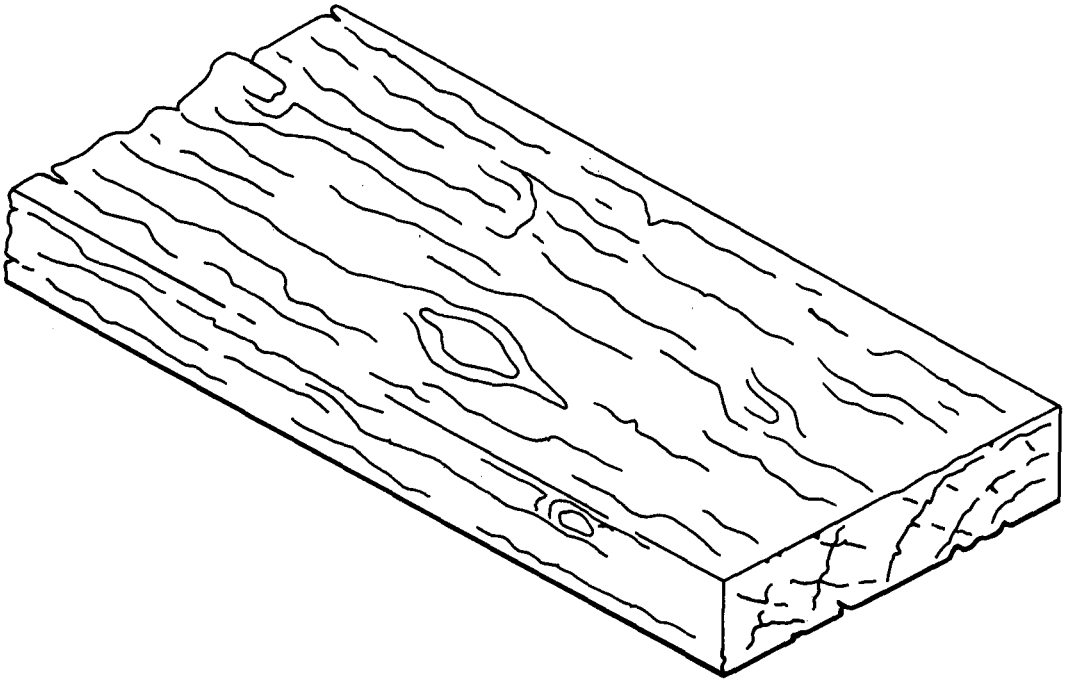

Fabricated from:

a. NSN 5510-00-270-6031 WOOD LAMINATED,DECK

TA231395

APPENDIX H

TORQUE LIMITS

CAPSCREW MARKING

Current Usage	Much Used	Much Used	Used at Times	Used at times
Quality of Material	Indeterminate	Minimum Commercial	Medium Commercial	Best Commercial
SAE Grade Number	1 or 2	5	6 or 7	8
Capscrew Head Markings	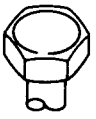		6 	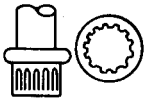
Manufacturer's marks may vary			7 	
These are all SAE Grade 5 (3 line)				

TORQUE VALUES

CAUTION

if replacement capscrews are of a higher grade than originally supplied, use torque specifications for the original. This will prevent equipment damage due to over torquing.

Capscrew Body Size (Inches)	(Thread)	Torque Ft Lb (NŽm)		Torque Ft Lb (NŽm)		Torque Ft Lb (NŽm)		Torque Ft Lb (NŽm)	
1/4	20	5	(7)	8	(11)	10	(14)	12	(16)
	28	6	(8)	10	(14)			14	(19)
5/16	18	11	(15)	17	(23)	19	(26)	24	(33)
	24	13	(18)	19	(26)			27	(37)
3/8	16	18	(24)	31	(42)	34	(46)	44	(60)
	24	20	(27)	35	(47)			49	(66)
7/16	14	28	(38)	49	(66)	55	(75)	70	(95)
	20	30	(41)	55	(75)			78	(106)
1/2	13	39	(53)	75	(102)	85	(115)	105	(142)
	20	41	(56)	85	(115)			120	(163)
9/16	12	51	(69)	110	(149)	120	(163)	155	(210)
	18	55	(75)	120	(163)			170	(231)
5/8	11	83	(113)	150	(203)	167	(226)	210	(285)
	18	95	(129)	170	(231)			240	(325)
3/4	10	105	(142)	270	(366)	280	(380)	375	(508)
	16	115	(156)	295	(400)			420	(569)
7/8	9	160	(217)	395	(536)	440	(597)	605	(820)
	14	175	(237)	435	(590)			675	(915)
1	8	235	(319)	590	(800)	660	(895)	910	(1234)
	14	250	(339)	660	(895)			990	(1342)

TA231396

TORQUE VALUES - CONTINUED

NOTE

Always use the torque values listed when specific torque values are not available.

Do not use listed values in place of those specified in other sections of this manual; special attention should be observed when using SAE Grade 6, 7, and 8 capscrews.

The above is based on use of clean, dry threads.

Reduce torque by 10 percent when engine oil is used as a lubricant.

Reduce torque by 20 percent if new plated capscrews are used.

Capscrews threaded into aluminum may require reductions in torque of 30 percent or more of Grade 5 capscrews torque and must attain two capscrew diameters of thread engagement.

INDEX

Subject Page

A

INDEX - CONTINUED

Subject | Page

A - Continued

B

INDEX - CONTINUED

Subject Page

B - Continued

INDEX - CONTINUED

Subject | Page

B - Continued

C

INDEX - CONTINUED

Subject Page

C - Continued

D

INDEX - CONTINUED

Subject | Page

D - Continued

E

INDEX - CONTINUED

Subject Page

E - Continued

F

INDEX - CONTINUED

Subject Page

F - Continued

G

H

INDEX - CONTINUED

Subject Page

I

J

K

L

INDEX - CONTINUED

Subject | Page

L - Continued

M

INDEX - CONTINUED

Subject | Page

M – Continued

O

INDEX - CONTINUED

Subject Page

O - Continued

INDEX - CONTINUED

Subject Page

P

R

INDEX - CONTINUED

Subject Page

R - Continued

S

INDEX - CONTINUED

Subject | Page

S - Continued

INDEX - CONTINUED

Subject | Page

S - Continued

T

U

INDEX - CONTINUED

Subject Page

U - Continued

V

W

INDEX - CONTINUED

Subject | Page

W - CONTINUED

☆U.S. GOVERNMENT PRINTING OFFICE: 1992 643-016/60106

By Order of the Secretary of the Army:

JOHN A. WICKHAM, JR.
General, United States Army
Chief of Staff

Official:

DONALD J. DELANDRO
Brigadier General, United States Army
The Adjutant General

Distribution:
To be distributed in accordance with DA Form 12-39, Operator, Organizational, Direct and General Support Maintenance requirements for Semitrailer, Van, Shop, 6-ton, 2-wheel, Ml46.

U.S. GOVERNMENT PRINTING OFFICE: 1985-554-019/20123

RECOMMENDED CHANGES TO EQUIPMENT TECHNICAL PUBLICATIONS

THEN. . JOT DOWN THE DOPE ABOUT IT ON THIS FORM, CAREFULLY TEAR IT OUT, FOLD IT AND DROP IT IN THE MAIL!

SOMETHING WRONG WITH THIS PUBLICATION?

FROM: (PRINT YOUR UNIT'S COMPLETE ADDRESS)

YOUR MAILING ADDRESS

DATE SENT

PUBLICATION NUMBER	PUBLICATION DATE	PUBLICATION TITLE
TM9-2330-227-14&P	June 85	Semitrailer, Shop Van, 6-Ton, M146 (NSN 2330-00-569-9372).

BE EXACT. . .PIN-POINT WHERE IT IS

PAGE NO.	PARA-GRAPH	FIGURE NO.	TABLE NO.
5-17		Step 33	

IN THIS SPACE TELL WHAT IS WRONG AND WHAT SHOULD BE DONE ABOUT IT:

Harness branch (12) should be harness branch (13).

SAMPLE

PRINTED NAME, GRADE OR TITLE, AND TELEPHONE NUMBER

Doe, John PFC (313) 123-4567

SIGN HERE

John Doe, PFC

DA FORM 1 JUL 79 2028-2

PREVIOUS EDITIONS ARE OBSOLETE.

P.S.--IF YOUR OUTFIT WANTS TO KNOW ABOUT YOUR RECOMMENDATION MAKE A CARBON COPY OF THIS AND GIVE IT TO YOUR HEADQUARTERS

REVERSE OF DA FORM 2028-2

FILL IN YOUR UNIT'S ADDRESS

FOLD BACK

DEPARTMENT OF THE ARMY

OFFICIAL BUSINESS
PENALTY FOR PRIVATE USE $300

POSTAGE AND FEES PAID
DEPARTMENT OF THE ARMY
DOD 314

U.S. MAIL

TEAR ALONG PERFORATED LINE

Commander
US Army Tank-Automotive Command
ATTN: AMSTA-MB
Warren, MI 48397-5000

SAMPLE

RECOMMENDED CHANGES TO EQUIPMENT TECHNICAL PUBLICATIONS

THEN. . JOT DOWN THE DOPE ABOUT IT ON THIS FORM, CAREFULLY TEAR IT OUT, FOLD IT AND DROP IT IN THE MAIL!

SOMETHING WRONG WITH THIS PUBLICATION?

FROM: (PRINT YOUR UNIT'S COMPLETE ADDRESS)

DATE SENT

PUBLICATION NUMBER	PUBLICATION DATE	PUBLICATION TITLE
TM9-2330-227-14&P	June 85	Semitrailer, Shop Van, 6-Ton, M146 (NSN 2330-00-569-9372).

BE EXACT. . PIN-POINT WHERE IT IS

PAGE NO	PARA-GRAPH	FIGURE NO	TABLE NO

IN THIS SPACE TELL WHAT IS WRONG AND WHAT SHOULD BE DONE ABOUT IT:

PRINTED NAME, GRADE OR TITLE, AND TELEPHONE NUMBER

SIGN HERE

DA FORM 1 JUL 79 2028-2

PREVIOUS EDITIONS ARE OBSOLETE.

P.S.--IF YOUR OUTFIT WANTS TO KNOW ABOUT YOUR RECOMMENDATION MAKE A CARBON COPY OF THIS AND GIVE IT TO YOUR HEADQUARTERS

REVERSE OF DA FORM 2028-2

FILL IN YOUR UNIT'S ADDRESS

FOLD BACK

DEPARTMENT OF THE ARMY

OFFICIAL BUSINESS
PENALTY FOR PRIVATE USE $300

POSTAGE AND FEES PAID
DEPARTMENT OF THE ARMY
DOD 314

U.S. MAIL

TEAR ALONG PERFORATED LINE

Commander
US Army Tank-Automotive Command
ATTN: AMSTA-MB
Warren, MI 48397-5000

RECOMMENDED CHANGES TO EQUIPMENT TECHNICAL PUBLICATIONS

SOMETHING WRONG WITH THIS PUBLICATION?

FROM: (PRINT YOUR UNIT'S COMPLETE ADDRESS)

DATE SENT

PUBLICATION NUMBER	PUBLICATION DATE	PUBLICATION TITLE
TM9-2330-227-14&P	June 85	Semitrailer, Shop Van, 6-Ton, M146 (NSN 2330-00-569-9372).

BE EXACT. . .PIN-POINT WHERE IT IS

PAGE NO.	PARA-GRAPH	FIGURE NO.	TABLE NO.

IN THIS SPACE TELL WHAT IS WRONG AND WHAT SHOULD BE DONE ABOUT IT:

PRINTED NAME, GRADE OR TITLE, AND TELEPHONE NUMBER

SIGN HERE

DA FORM 1 JUL 79 2028-2

PREVIOUS EDITIONS ARE OBSOLETE.

P.S.--IF YOUR OUTFIT WANTS TO KNOW ABOUT YOUR RECOMMENDATION MAKE A CARBON COPY OF THIS AND GIVE IT TO YOUR HEADQUARTERS

REVERSE OF DA FORM 2028-2

FILL IN YOUR UNIT'S ADDRESS

FOLD BACK

DEPARTMENT OF THE ARMY

OFFICIAL BUSINESS
PENALTY FOR PRIVATE USE $300

POSTAGE AND FEES PAID
DEPARTMENT OF THE ARMY
DOD 314

U.S. MAIL

TEAR ALONG PERFORATED LINE

Commander
US Army Tank-Automotive Command
ATTN: AMSTA-MB
Warren, MI 48397-5000

RECOMMENDED CHANGES TO EQUIPMENT TECHNICAL PUBLICATIONS

THEN. . JOT DOWN THE DOPE ABOUT IT ON THIS FORM, CAREFULLY TEAR IT OUT, FOLD IT AND DROP IT IN THE MAIL!

SOMETHING WRONG WITH THIS PUBLICATION?

FROM: (PRINT YOUR UNIT'S COMPLETE ADDRESS)

DATE SENT

PUBLICATION NUMBER	PUBLICATION DATE	PUBLICATION TITLE
TM9-2330-227-14&P	June 85	Semitrailer, Shop Van, 6-Ton, M146 (NSN 2330-00-569-9372).

BE EXACT. . PIN-POINT WHERE IT IS

PAGE NO	PARA-GRAPH	FIGURE NO	TABLE NO

IN THIS SPACE TELL WHAT IS WRONG AND WHAT SHOULD BE DONE ABOUT IT:

PRINTED NAME, GRADE OR TITLE, AND TELEPHONE NUMBER

SIGN HERE

DA FORM 1 JUL 79 2028-2

PREVIOUS EDITIONS ARE OBSOLETE.

P.S.--IF YOUR OUTFIT WANTS TO KNOW ABOUT YOUR RECOMMENDATION MAKE A CARBON COPY OF THIS AND GIVE IT TO YOUR HEADQUARTERS

REVERSE OF DA FORM 2028-2

FILL IN YOUR UNIT'S ADDRESS

FOLD BACK

DEPARTMENT OF THE ARMY

OFFICIAL BUSINESS
PENALTY FOR PRIVATE USE $300

POSTAGE AND FEES PAID
DEPARTMENT OF THE ARMY
DOD 314

U.S. MAIL

TEAR ALONG PERFORATED LINE

Commander
US Army Tank-Automotive Command
ATTN: AMSTA-MB
Warren, MI 48397-5000

THE METRIC SYSTEM AND EQUIVALENTS

LINEAR MEASURE

1 Centimeter=10 Millimeters=0.01 Meters=0.3937 Inches
1 Meter=100 Centimeters=1000 Millimeters=39.37 Inches
1 Kilometer=1000 Meters=0.621 Miles

WEIGHTS

1 Gram=0.001 Kilograms=1000 Milligrams=0.035 Ounces
1 Kilogram=1000 Grams=2.2 Lb
1 Metric Ton=1000 Kilograms=1 Megagram=1.1 Short Tons

LIQUID MEASURE

1 Milliliter=0.001 Liters=0.0338 Fluid Ounces
1 Liter=1000 Milliliters=33.82 Fluid Ounces

SQUARE MEASURE

1 Sq Centimeter=100 Sq Millimeters=0.155 Sq Inches
1 Sq Meter=10,000 Sq Centimeters=10.76 Sq Feet
1 Sq Kilometer=1,000,000 Sq Meters=0.0386 Sq Miles

CUBIC MEASURE

1 Cu Centimeter=1000 Cu Millimeters=0.06 Cu Inches
1 Cu Meter=1,000,000 Cu Centimeters=35.31 Cu Feet

TEMPERATURE

5/9 (°F - 32) = °C
212° Fahrenheit is equivalent to 100° Celsius
90° Fahrenheit is equivalent to 32.2° Celsius
32° Fahrenheit is equivalent to 0° Celsius
9/5 C° +32=F°

APPROXIMATE CONVERSION FACTORS

TO CHANGE	TO	MULTIPLY BY
Inches	Centimeters	2.540
Feet	Meters	0.305
Yards	Meters	0.914
Miles	Kilometers	1.609
Square Inches	Square Centimeters	6.451
Square Feet	Square Meters	0.093
Square Yards	Square Meters	0.836
Square Miles	Square Kilometers	2.590
Acres	Square Hectometers	0.405
Cubic Feet	Cubic Meters	0.028
Cubic Yards	Cubic Meters	0.765
Fluid Ounces	Milliliters	29.573
Pints	Liters	0.473
Quarts	Liters	0.946
Gallons	Liters	3.785
Ounces	Grams	28.349
Pounds	Kilograms	0.454
Short Tons	Metric Tons	0.907
Pound-Feet	Newton-Meters	1.356
Pounds per Square Inch	Kilopascals	6.895
Miles per Gallon	Kilometers per Liter	0.425
Miles per Hour	Kilometers per Hour	1.609

TO CHANGE	TO	MULTIPLY BY
Centimeters	Inches	0.394
Meters	Feet	3.280
Meters	Yards	1.094
Kilometers	Miles	0.621
Square Centimeters	Square Inches	0.155
Square Meters	Square Feet	10.764
Square Meters	Square Yards	1.196
Square Kilometers	Square Miles	0.386
Square Hectometers	Acres	2.471
Cubic Meters	Cubic Feet	35.315
Cubic Meters	Cubic Yards	1.308
Milliliters	Fluid Ounces	0.034
Liters	Pints	2.113
Liters	Quarts	1.057
Liters	Gallons	0.264
Grams	Ounces	0.035
Kilograms	Pounds	2.205
Metric Tons	Short Tons	1.102
Newton-Meters	Pound-Feet	0.738
Kilopascals	Pounds per Square Inch	0.145
Kilometers per Liter	Miles per Gallon	2.354
Kilometers per Hour	Miles per Hour	0.621

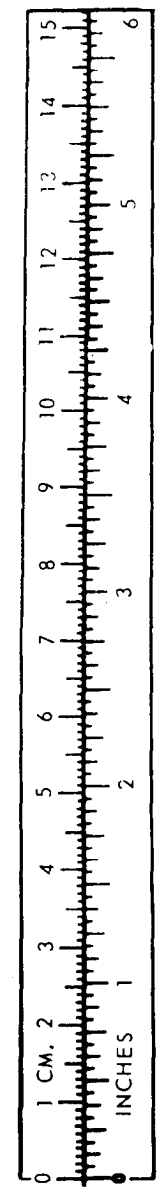

TA231397

(FOR REFERENCE ONLY)