TECHNICAL MANUAL

OPERATOR'S, UNIT, DIRECT SUPPORT AND GENERAL SUPPORT MAINTENANCE MANUAL (INCLUDING REPAIR PARTS AND SPECIAL TOOLS LIST) FOR

SEMITRAILER, VAN: ELECTRONIC TACTICAL 12-TON, 4-WHEEL, XM1063

(NSN 2330-01-224-9244)

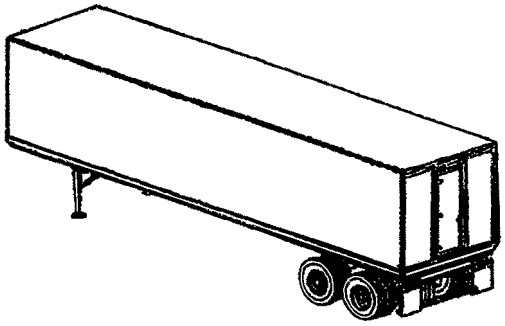

SEMITRAILER, VAN: SUPPLY 12-TON, 4-WHEEL, M129A4

(NSN 2330-01-372-5642)

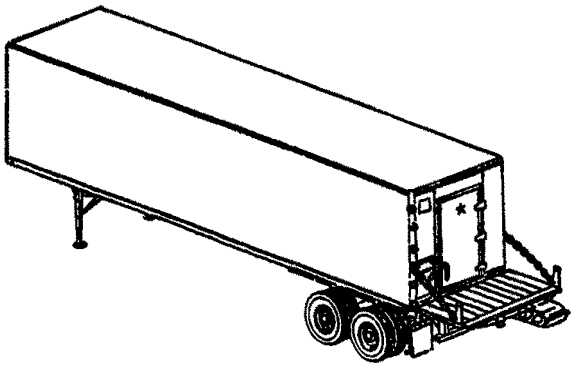

Approved for public release; distribution is unlimited.

*Supersedes TM 9-2330-380-14&P, dated 15 December 1998 and all changes.

HEADQUARTERS, DEPARTMENT OF THE ARMY

APRIL 2005

FOR INFORMATION ON FIRST AID, REFER TO FM 21-11.

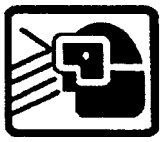

WARNING

COMPRESSED AIR

Compressed air used for cleaning or drying purposes, or for clearing restrictions, should never exceed 30 psi (207 kPa). Wear protective clothing (goggles/shield, gloves, etc.) and use caution to avoid injury to personnel.

AIR UNDER PRESSURE

100 psi air pressure is used in the operation of this equipment. Ignoring this warning may result in serious injury or death to personnel.

WARNING

CLEANING METHODS

Improper cleaning methods and use of unauthorized cleaning liquids or solvents can injure personnel and damage equipment. To prevent this, refer to TM 9-247 for further instructions.

WARNING

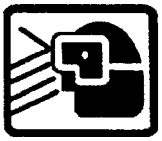

DRY CLEANING SOLVENT

Dry cleaning solvent (P-D-680) is TOXIC and flammable. Wear protective goggles and gloves; use only in a well-ventilated area; avoid contact with skin, eyes, and clothes; and DO NOT breathe vapors. Keep away from heat or flame. Never smoke when using dry cleaning solvent; the flash point for type I dry cleaning solvent is 100°F (38°C) and for type II it is 138°F (50°C). Failure to follow this warning may result in injury or death to personnel.

If personnel become dizzy while using dry cleaning solvent, immediately get fresh air and medical help. If solvent contacts skin or clothes, flush with cold water. If solvent contacts eyes, immediately flush them with water and get immediate medical attention.

When dry cleaning solvent is used, notify the local medical authority (preventive medicine) and environmental coordinator concerning medical surveillance, respiratory protection and disposal requirements.

WARNING

HEAVY COMPONENTS

Use only approved lifting equipment. All personnel must stand clear of lifting device when raising or lowering heavy components. When working beneath equipment, it must be supported properly. Do not depend on hydraulic jacks or cylinders to support equipment. Use jack stands and/or blocking. Failure to follow this warning may result in injury or death to personnel.

Two persons are required to remove/install ladder.

Two persons are required to remove/install landing gear or leveling jack.

WARNING

SECURING SEMITRAILER

If semitrailer is not coupled to towing vehicle, make sure wheels are securely chocked and parking brakes are set. Failure to follow this warning may cause trailer to roll, resulting in serious injury or death to personnel and damage to equipment.

WARNING

LEVELING JACKS

To avoid injury, do not stand between towing vehicle and trailer during operation of leveling jacks.

WARNING

AIR HOSE INSTALLATION

Make sure that service and emergency air hoses are correctly installed on towing vehicle and that air valves are open, in order to supply air pressure to trailer. Ignoring this warning will result in total brake failure, which may result in serious injury or death to personnel.

WARNING

Ensure towing vehicle kingpin wedges are in place during operations on other than paved roads. Failure to follow this warning could result in serious injury or death to personnel.

LIST OF EFFECTIVE PAGES/WORK PACKAGES

NOTE: The portion of text or illustration effected by the updates is indicated by a vertical line in the outer margin of the page. Updates to wiring diagrams are indicated by shaded areas.

Dates of issue for original and updated pages/work packages are:

Original ..0 ..15 April 2005

TOTAL NUMBER OF PAGES FOR FRONT AND REAR MATTER IS 28 AND TOTAL NUMBER OF PAGES IS 480 CONSISTING OF THE FOLLOWING:

Page/WP No.	*Change No.
Cover	0
a to b	0
List of Effective Pages	0
i to viii (Blank)	0
1-1 to 1-24 (Blank)	0
2-1 to 2-28	0
3-1 to 3-10	0
4-1 to 4-150 (Blank)	0
5-1 to 5-24 (Blank)	0
A-1 to A-2	0
B-1 to B-12 (Blank)	0
C-1 to C-6 (Blank)	0
D-1 to D-2 (Blank)	0
E-1 to E-4	0
F-1 to F-8	0
Fig 1 to Fig 49 (Blank)	0
G-1 to G-16	0
H-1 to H-2	0
I-1 to I-24 (Blank)	0
J-1 to J-8 (Blank)	0
K-1 to K-6 (Blank)	0
Index-1 to Index-20 (Blank)	0*

TECHNICAL MANUAL
NO. 9-2330-380-14&P*

HEADQUARTERS
DEPARTMENT OF THE ARMY
Washington, D.C., 15 April 2005

OPERATOR'S, UNIT, DIRECT SUPPORT AND GENERAL SUPPORT MAINTENANCE MANUAL (INCLUDING REPAIR PARTS AND SPECIAL TOOLS LIST) FOR

TRAILER, VAN: ELECTRONIC TACTICAL

12-TON, 4-WHEEL, XM1063
(NSN 2330-01-224-9244)

SEMITRAILER, VAN: SUPPLY
12-TON, 4-WHEEL, M129A4
(NSN 2330-01-372-5642)

Current as of 15 April 2005

REPORTING OF ERRORS AND RECOMMENDING IMPROVEMENTS

You can improve this manual. If you find any mistakes, or if you know of a way to improve the procedures, please let us know. Submit your DA Form 2028-2 (Recommended Changes to Equipment Technical Publications), through the Internet, on the Army Electronic Product Support (AEPS) website. The Internet address is http://aeps.ria.army.mil. If you need a password, scroll down and click on "ACCESS REQUEST FORM". The DA Form 2028 or DA Form 2028-2 direct to: Technical Publications Information Office, TACOM-R1, 1 Rock Island Arsenal, Rock Island, IL 61299-7630. The email address is TACOM-TECH-PUBS@ria.army.mil. The Fax number is DSN 793-0726 or Commercial (309) 782-0726.

Approved for public release; distribution is unlimited.

TABLE OF CONTENTS

* SUPERSEDES TM 9-2330-380-14&P, DATED 15 DECEMBER, 1988 AND ALL CHANGES.

TABLE OF CONTENTS (cont'd)

TABLE OF CONTENTS (cont'd)

TABLE OF CONTENTS (cont'd)

TABLE OF CONTENTS (cont'd)

HOW TO USE THIS MANUAL

SCOPE

This technical manual provides you with the information you will need to operate and maintain the XM1063 and M129A4 semitrailers.

The information contained in this manual is presented in five chapters and nine appendixes, including a Repair Parts and Special Tools List (RPSTL). Each chapter is divided into sections covering operating procedures and/or other information for specific systems or components.

Appendix A of this manual gives the full title of every manual, form, pamphlet or other document referenced in this manual.

INDEXING

Four indexing procedures are used to help you locate information quickly:

- Cover index. Lists chapter titles and important parts of the manual, with corresponding page numbers. Each chapter or part listed is boxed in, with a black outer edge that is in line with the first page of that chapter or part.
- Table of Contents. The table of contents follows the summary of warnings. The table of contents lists all chapters and sections numerically, with corresponding page numbers.
- Section indexes. Each section starts with a numerical listing of all paragraphs in that section.
- Alphabetical index. The alphabetically arranged subject index starts on page Index-1.

WARNINGS, CAUTIONS AND NOTES

You must read and understand this manual BEFORE operating the XM1063 and M129A4 semitrailers.

Throughout this manual you will see **WARNING, CAUTION** and **NOTE** headings. There are good reasons for every one of these notices.

WARNING

A warning is used to alert the user to hazardous operating and maintenance procedures, practices, or conditions that could result in injury or death. Warnings must be strictly observed.

WARNINGS, CAUTIONS AND NOTES (cont'd)

CAUTION

A caution is used to alert the user to hazardous operating and maintenance procedures, practices, or conditions that could result in damage to, or destruction of, equipment or mission effectiveness. Cautions must be strictly observed.

NOTE

A note highlights an essential operating or maintenance procedure, condition or statement.

Warnings and cautions appear immediately preceding the step to which they pertain. It is important to read and thoroughly understand the warnings and/or cautions before beginning maintenance.
Notes may precede or follow the steps to which they pertain, depending on what makes the most sense.

CHAPTER 1
INTRODUCTION

Section I. GENERAL INFORMATION

1-1. General

a. Type of manual:

Operator's, Unit, Direct Support and Intermediate General Support Maintenance Manual (including Repair Parts and Special Tools List).

b. Model number and equipment name:

XM1063, Semitrailer, Van: Electronic Tactical, 12-ton, 40 feet long, 102 inches wide.
M129A4, Semitrailer, Van: Supply, 12-ton, 37 feet long (with platform retracted), 96 inches wide.

c. Purpose of equipment:

XM1063: House and transport sensitive electronic equipment.
M129A4: Provides temporary electronic work and storage space.

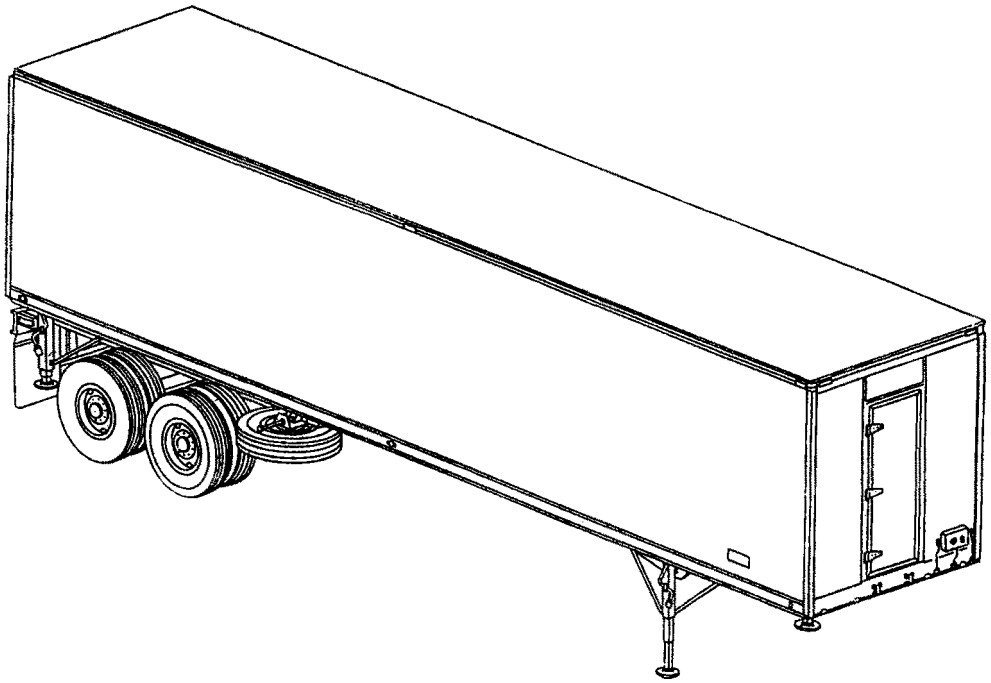

XM1063 Semitrailer, Right Front View

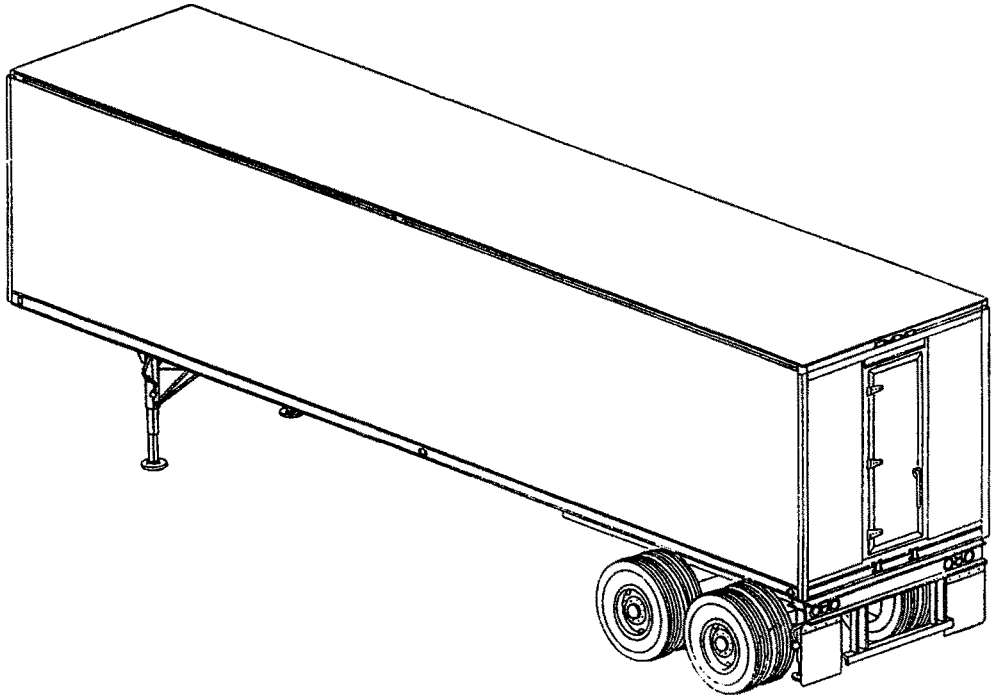

XM1063 Semitrailer, Left Rear View

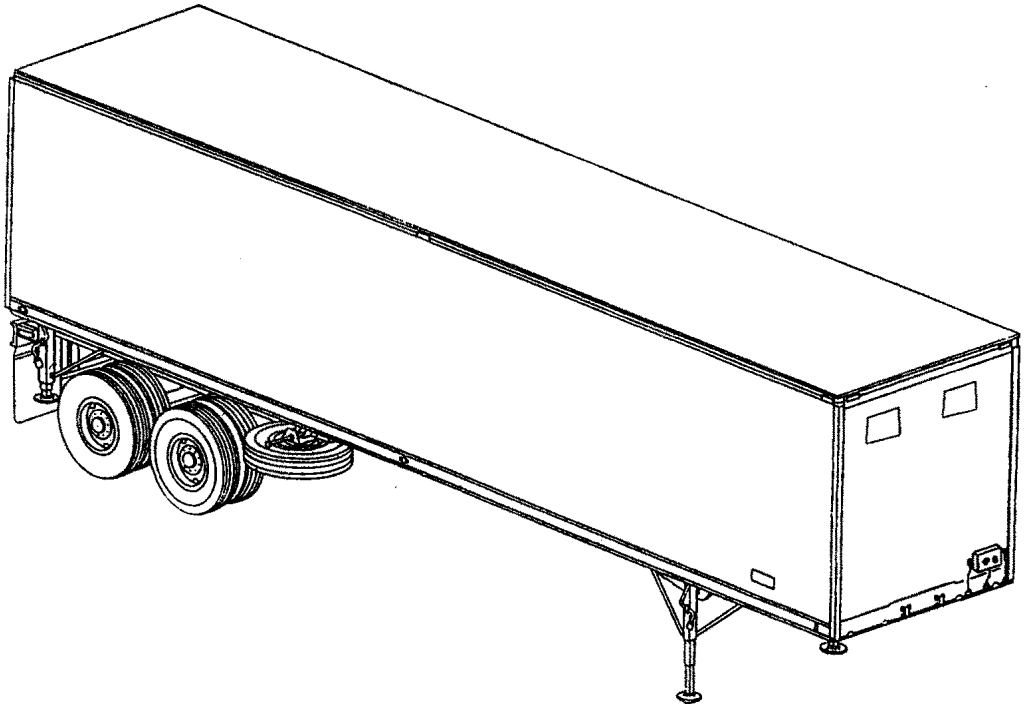

M129A4 Semitrailer, Right Front View

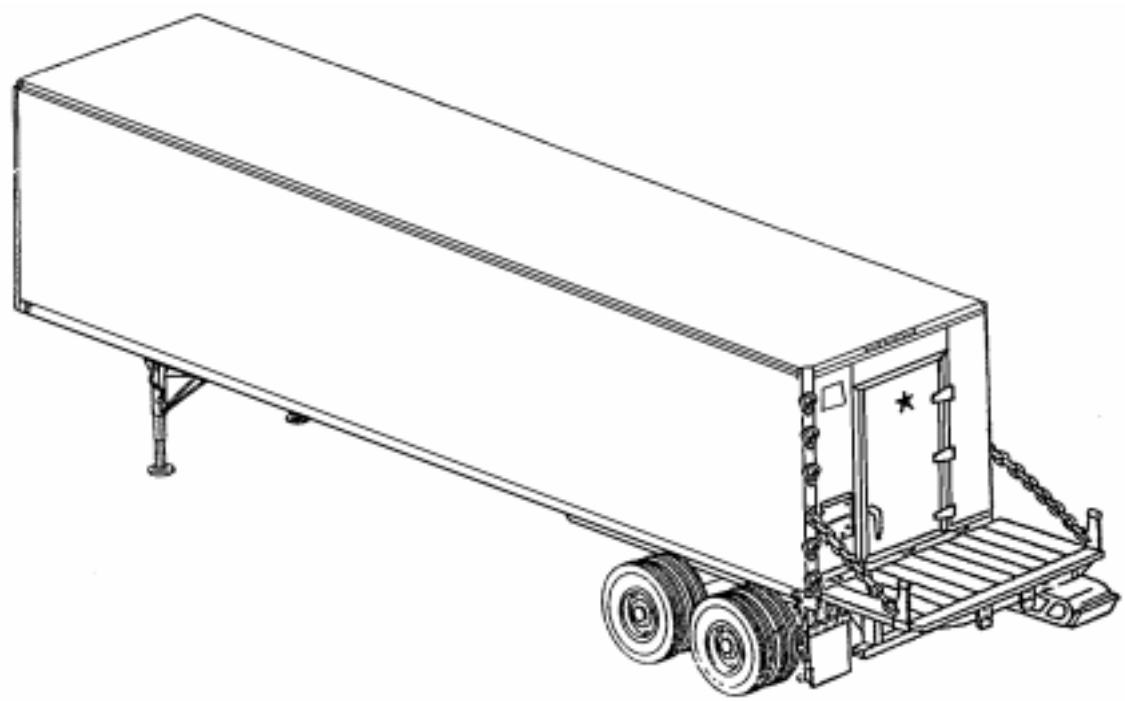

M129A4 Semitrailer, Left Rear View

1-2. Maintenance Forms, Records and Reports

Department of the Army forms and procedures used for equipment maintenance will be those prescribed by DA PAM738-750, The Army Maintenance Management System.

1-3. Destruction of Army Materiel to Prevent Enemy Use

For destruction of Army materiel to prevent enemy use, refer to TM 750-244-5.

1-4. Preparation for Storage

For information on administrative storage, refer to para. 4-78.

1-5. Reporting Equipment Improvement Recommendations (EIRs)

EIRs can and must be submitted by anyone who is aware of an unsatisfactory condition with the equipment design or use. It is not necessary to show a new design or list a better way to perform a procedure, just simply tell why the design is unfavorable or why a procedure is difficult. EIRs may be submitted on SF 368 (Quality Deficiency Report). Mail directly to Commander, US Army Tank- automotive and Armaments Command, ATTN: AMSTA-TR-E/MPA, Warren, MI 48397-5000. We will send you a reply.

Section II. EQUIPMENT DESCRIPTION AND DATA

1-6. Equipment Characteristics, Capabilities and Features

a. Characteristics

(1) Serves as a housing for electronic equipment.
(2) Serves to transport the electronic equipment in operating condition.
(3) Provides quick-set in operating mode.

b. Capabilities and Features

(1) Transports delicate electronic equipment with a minimum of vibration.
(2) Provides level attitude needed for operation of delicate electronic equipment through use of landing gears and leveling jacks.

WARNING

Ensure towing vehicle kingpin wedges are in place during operations on other than paved roads. Failure to follow this warning could result in serious injury or death to personnel.

(3) Can be towed at speeds up to 55 MPH (88.5 KPH) on highway, 30 MPH (48.3 KPH) on improved gravel, and 15 MPH (24) KPH) cross country when fully loaded.
(4) An air brake system provides positive stopping action of semitrailer.
(5) XM1063 is Radio Frequency Interference (RFI) shielded.
(6) It is weather insulated and water tight.
(7) It has a removable dolly assembly.
(8) The towing vehicle is the M52, M52A1, M652A2, M818, M931 or M932 tractor.
(9) M129A4 is equipped with 110-volt electrical interior lighting system.
(10) M129A4 (Registration numbers NX0RKB and subsequent) are equipped with interior 110-volt electrical receptacles.
(11) M129A4 is equipped with a fan assembly and air vent system for air circulation.
(12) M129A4 is equipped with fold-out steps for access to top of semitrailer.
(13) New production M129A4's (registration numbers NX0RKB and subsequent) are equipped with a light emitting diode (LED) lighting system. The voltage converter box, in the LED system, no longer requires fuses/circuit breakers.

1-7 Location and Description of Major Components

The front, rear, right and left designations used in the manual designate the general areas of sides of the semitrailer as viewed from the rear of the semitrailer, facing the front.

a. Landing Gear

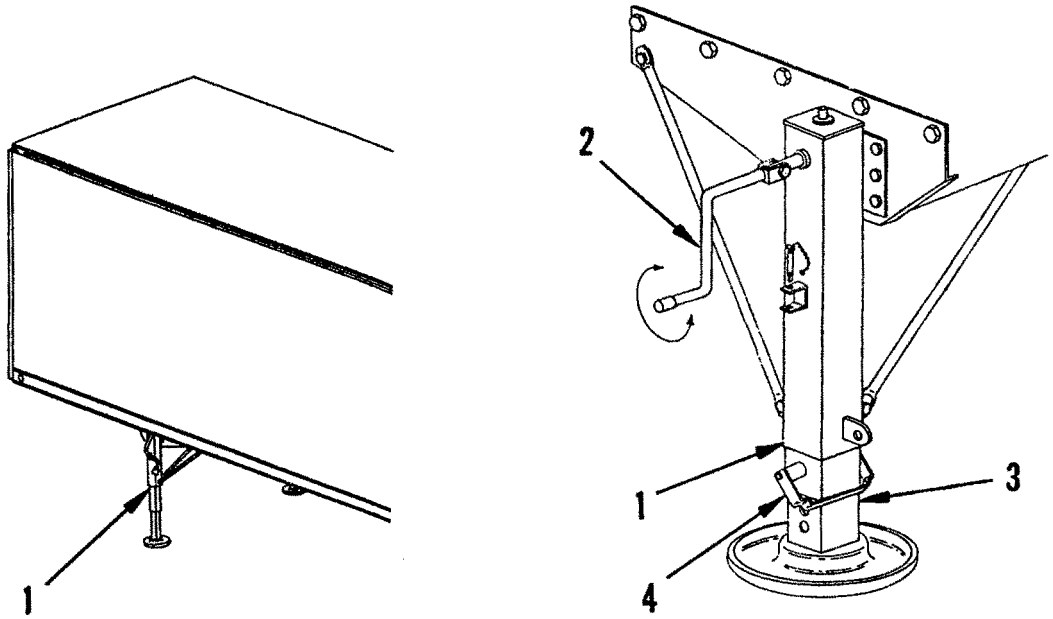

Two separately operated single-speed landing gears (1). Located near front of semitrailers.

Cranks (2) are used to operate landing gear legs to raise or lower front end of semitrailer to couple and uncouple from towing vehicle. Cranks are stowed on landing gear legs when not in use.

Landing gear is used to support semitrailer when not coupled to towing vehicle and to level front of semitrailer.

Landing gears are stowed on dolly frame for aircraft loading.

Landing gear on XM1063 has a release handle. Landing gear on M129A4 has a release pin.

Drop leg assemblies (3) are controlled by release handle (4). The drop leg assemblies contact the ground and can be used in sandy, soft areas, as well as on flat, hard surfaces.

1-7 Location and Description of Major Components (cont'd)

b. Front Door (1) (XM1063 only)

Located in the center front of van body.
Is an escape door. Does not have an outside handle.
Can only be opened from interior of semitrailer.
Front door is Radio Frequency Interference (RFI) shielded.

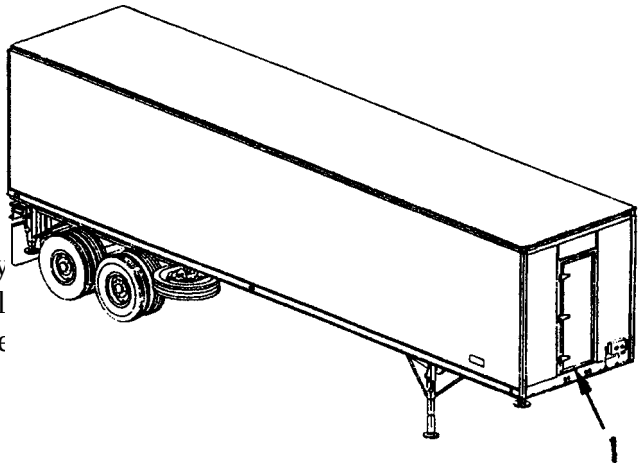

c. Rear Door (1)

Rear door is located in the center of the rear van body
It is used to gain access to the interior of the semitrail
Rear door is Radio Frequency Interference (RFI) shie
(XM1063 only).
Rear platform must be level for door to open/close properly (M129A4 only).

d. Boarding Ladder (1)

A four-step ladder is used at door to step up to semitrailer floor level.

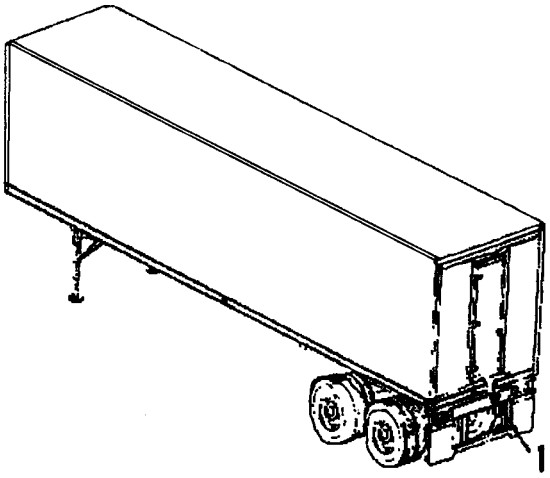

WARNING

Ladder is heavy. Two persons are required to remove/install ladder.

Refer to para. 2-13 for ladder installation procedure.
XM1063 ladder is stowed in brackets on underside of
in use.

M129A4 ladder is stowed in brackets on rear platform and has a detachable handrail (refer to Appendix C).

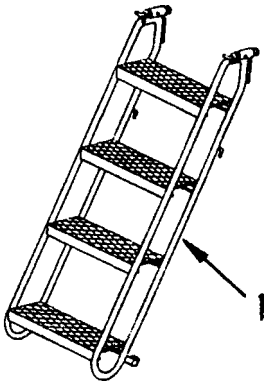

1-7. Location and Description of Major Components (cont'd)

e. Amber Reflector (1)

Four amber reflectors.
Two on each side, one near front and one at center.

f. Amber (LED or Incandescent) Clearance Light (2)

Six amber clearance lights.
One on each side. One on top corner of each side.
Open at top corner of each side of front.

g. Red Reflector (1)

Four red reflectors.
One at each end of dolly frame, between the stop and turn lights at each end.

h. Red (LED or Incandescent) Clearance Light (2)

Five red clearance lights.
One at lower rear corner of each side, on dolly frame.
One at center top of rear.

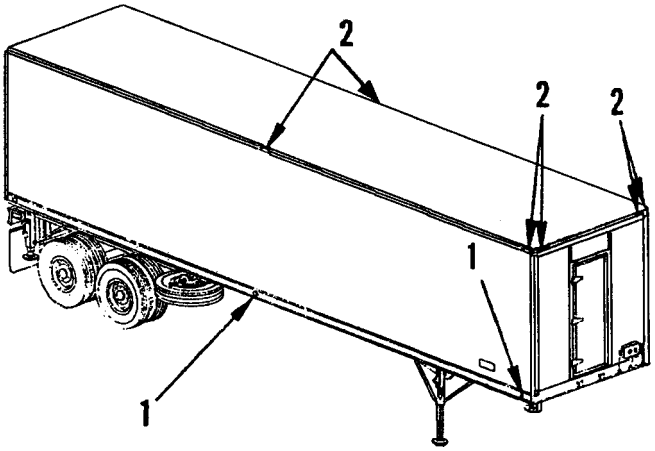

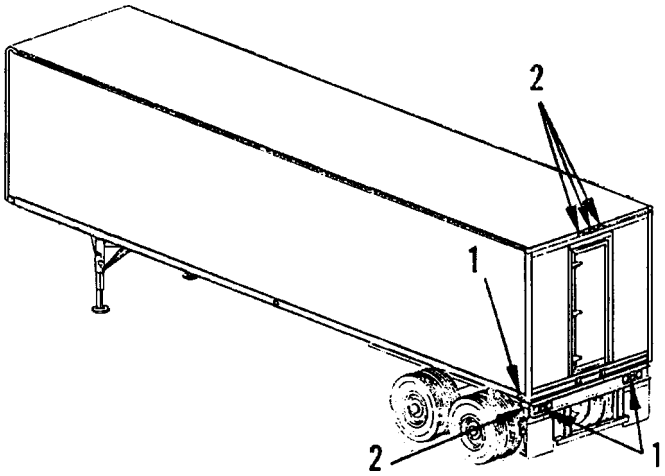

1-7. Location and Description of Major Components (cont'd)

i. Dolly Assembly

The dolly assembly, which can be removed, consists of:

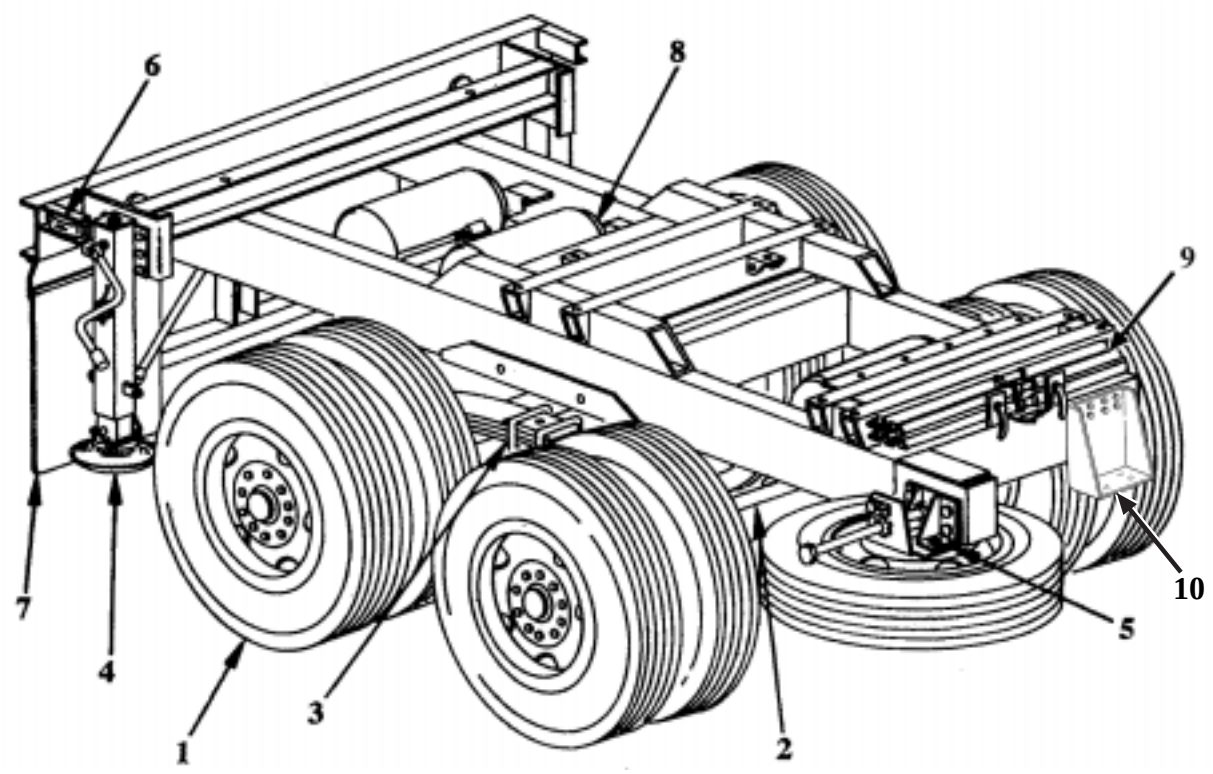

XM1063 Shown

1. Dual wheels and tires
2. Axle assembly
3. Suspension system
4. Leveling jacks (M129A4 Registration Numbers NX0QVH through NX0RC9 and XM1063 Only)
5. Spare wheel carrier (XM1063 Only)
6. Reflector
7. Splash guards
8. Air brake system
9. Support Braces
10. Decontamination Apparatus Mounting Bracket (XM1063 only)

1-7. Location and Description of Major Components (cont'd)

1. Dual wheels and tires

   M1063 has nine wheels (2) that are offset disk-type rims with split-type retaining rings. (The ninth wheel is mounted on the spare wheel carrier.)

   Nuts (1) for right wheels (marked R) have right hand threads. Nuts for left wheels (marked L) have left hand threads. The studs are similarly marked. Nuts (1) must be turned in the opposite direction of forward rotation of wheel to be loosened or removed.

   XM1063 tires (3) are tube type, highway tread, size 10.00 by 20, 12-ply rating.

   M129A4 has eight wheels (2) that are offset disk-type one piece rims. M129A4 tires are radial tubeless type, highway tread, size 11.00 by 22.50 G load range.

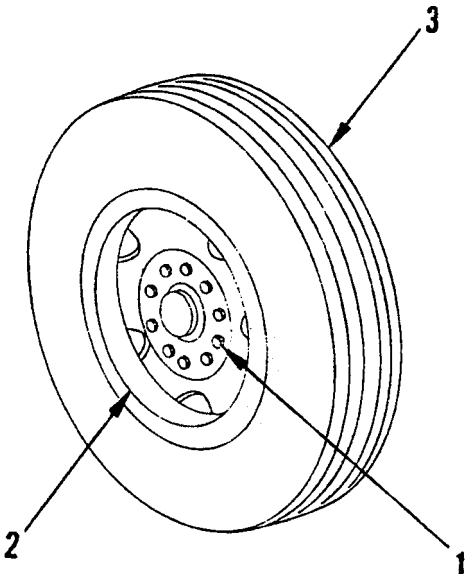

2. Axle assembly

   Two axle assemblies, one located at center and one at rear of dolly assembly. Each axle assembly has brake drums, hubs, brake assemblies and associated parts.

3. Hub

   Each hub (1) is mounted on an axle spindle on two tapered roller bearings. Brake drums are mounted on hubs.

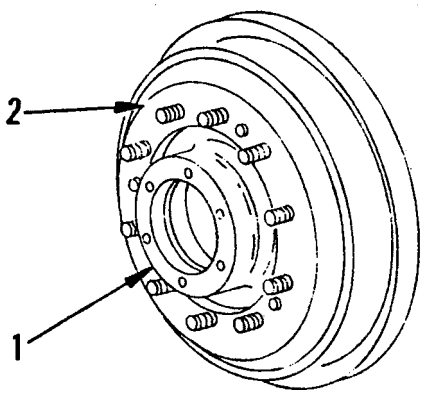

4. Brake drum

   Each brake drum (2) is secured with three screws and ten serrated bolts.

   A hub cap and gasket, secured to hub, keep out moisture and dirt.

5. Spare wheel carrier (XM1063 Only)

   Is mounted at right side, to front of dolly assembly.

   Has a wire rope and ratchet to help raise and lower spare wheel and tire.

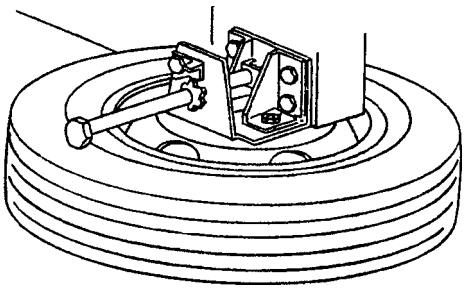

1-7. Location and Description of Major Components (cont'd)

j. Brake System

NOTE

XM1063 has three air reservoirs. M129A4 has two air reservoirs. XM1063 is shown.

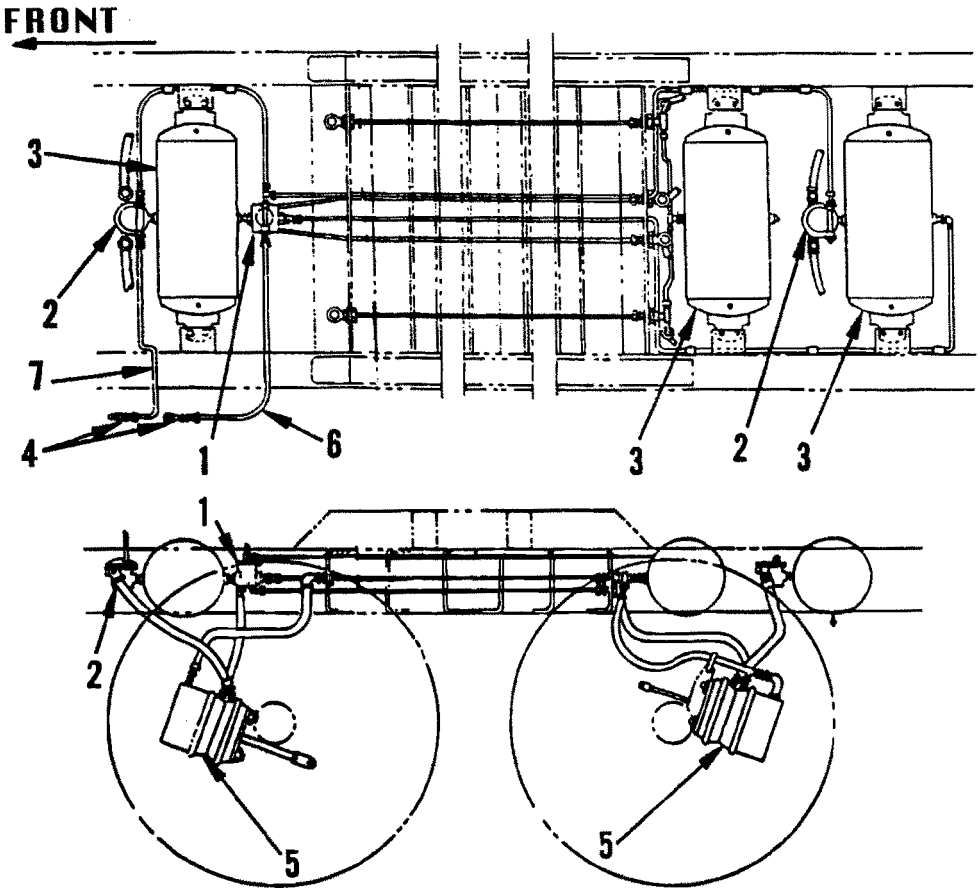

1. Ratio relay valve
2. Relay valve
3. Air reservoir
4. Air coupling
5. Air chamber
6. Emergency air line
7. Service air line

1. Service brakes

   Are straight air type.

   Air pressure operates braking system.

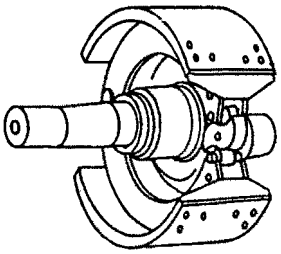

1-7. Location and Description of Major Components (cont'd)

2. Relay valve

   Two relay valves. One is located at the forward side of aft air reservoir. The other relay valve is located at forward side of forward air reservoir.

   Directly controls service brakes by controlling flow of air to and from air reservoir.

   Relays are connected to emergency and service air lines, air reservoirs and brake air chambers. Automatically apply brakes if semitrailer breaks away from towing vehicle. Brakes also automatically apply if there is a serious leak in the emergency air line.

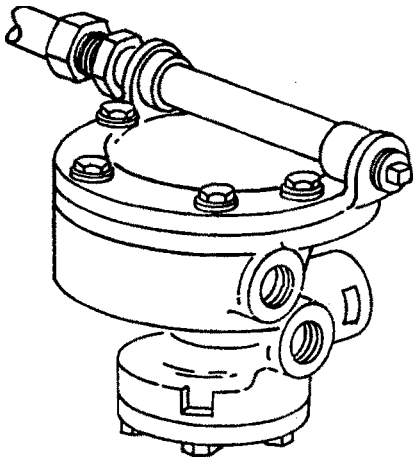

3. Ratio relay valve

   Air from the emergency air hose flows into the ratio relay valve. From there it flows to the relay valves and the air reservoirs.

   By directing the flow of emergency air, the ratio relay valve directly controls parking brakes.

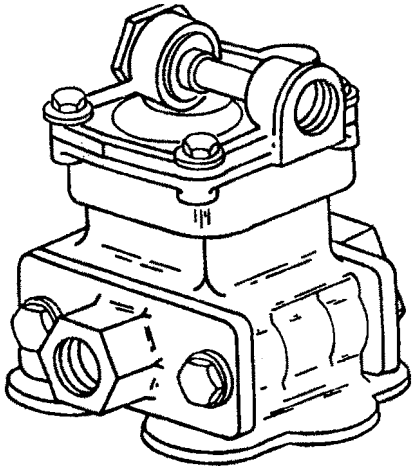

4. Air chambers

   Four air chambers (1) are located on the axle at each of the four wheel assemblies.
   Yoke assembly (2) on each air chamber acts with attached slack adjuster to apply brakes.

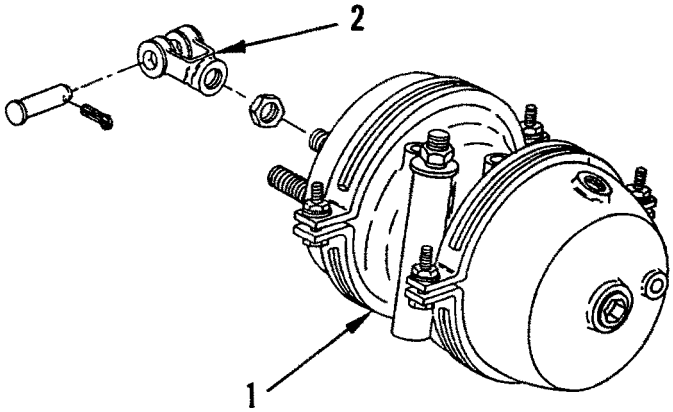

1-7. Location and Description of Major Components (cont'd)

NOTE

M129A4 is equipped with automatic slack adjusters. XM1063 slack adjuster is shown.

5. Slack adjusters

   Four slack adjusters (1). Each slack adjuster is splined to the camshaft at each of the four brake assemblies.The other end of the slack adjuster is connected to the air chamber yoke. The movement of slack adjuster causes the camshaft to turn; thus applying the brakes.

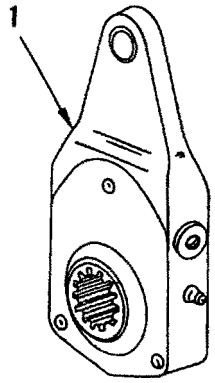

6. Air reservoirs

NOTE

M129A4 is equipped with two metal tanks. XM1063 has three metal tanks. XM1063 is shown.

Metal tanks are located on the dolly. The fore and aft reservoirs store compressed air for use in the semitrailer brake system. Each reservoir (1) is equipped with a drain cock (2) for draining moisture and releasing air pressure.

The center air reservoir (XM1063 only) stores exhaust air from the braking system. This will prevent water from entering the system during fording operations.

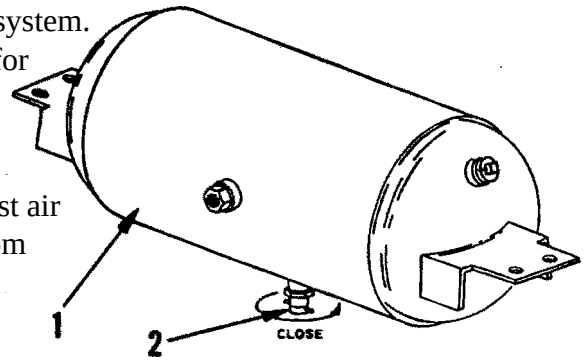

XM1063 Shown

NOTE

M129A4 and XM1063 gladhands serve the same function. XM1063 gladhands are shown.

7. Gladhand (air coupling)
   Two gladhands are located at bottom left side of front of semitrailer, on either side of the resistor box. Gladhands provide the connections to the brake air system.
   The SERVICE (blue) gladhand (1) is positioned to the left of the resistor box. The EMERGENCY (red) gladhand (2) is located to the right of the resistor box.

8. Gladhand covers
   Gladhand covers (3) are located on front of gladhands. Covers are spring loaded to keep dirt from entering when system is not connected.

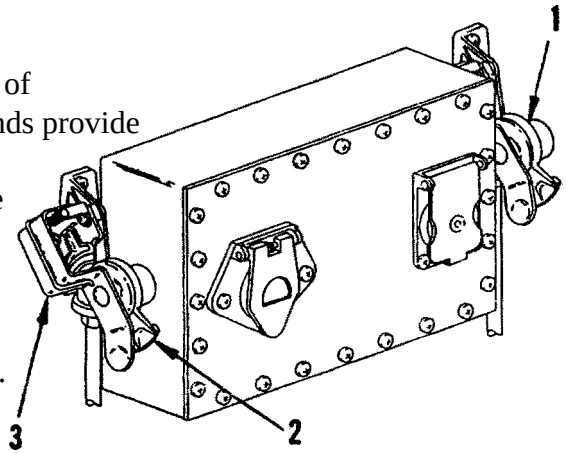

XM1063 Shown

1-7. Location and Description of Major Components (cont'd)

9. Compressed air supply

   Towing vehicle is equipped with an air compressor, air reservoir, governor for controlling air pressure, air gage and safety valve.
   Air lines, intervehicular air hoses (1), air couplings and shutoff valves transmit compressed air to semitrailer brake system through gladhands (2).

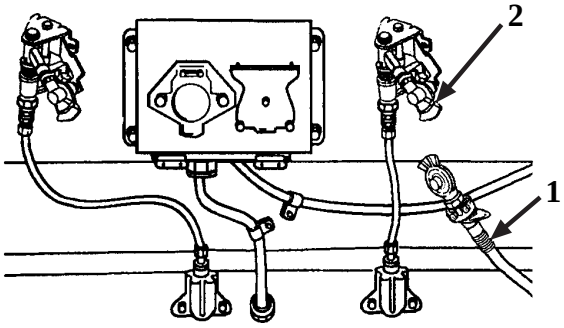

10. Service air line

    Service air line extends from gladhand marked SERVICE to top of the relay valves and the ratio relay valve. It transmits changes in air pressure which cause relay valves to function These changes result from brake being applied in towing vehicle.

11. Emergency air line

    Emergency air line extends from gladhand marked EMERGENCY to top of ratio relay valve. It transmits compressed air to fill air reservoirs and to maintain proper air pressure under control of the relay valves.

12. Internal brake mechanism

    Each brake mechanism is located within the brake drum.

    Each one has two brake shoes fitted with brake linings.

    S cam is used to expand brake shoes. Springs aid in retracting brake shoes.

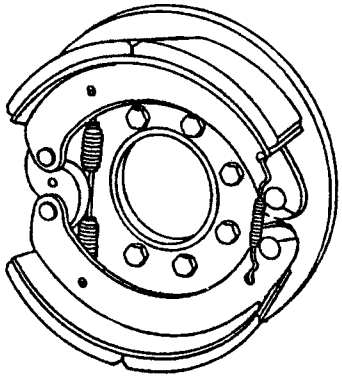

k. Leveling Jacks

NOTE

Leveling jacks are provided on M129A4 Registration Numbers NX0QV through NX0RC9 and XM1063 only.

Is provided at each rear corner of dolly.

Consists of housing assembly (1), screw (2), drop leg assembly (3), braces (4) and crank (5). Is used to level and help stabilize semitrailer.

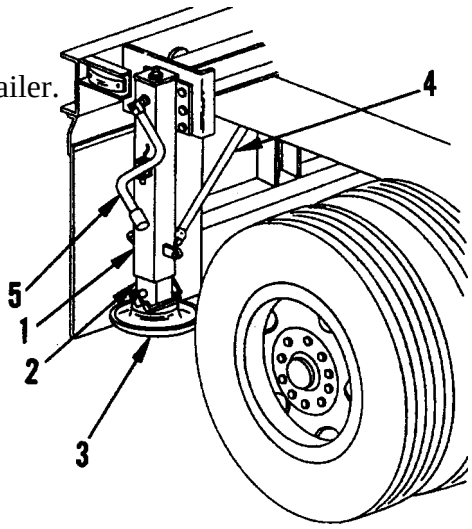

WARNING

Leveling jack is heavy. Two persons are required to remove/install leveling jack.

Is used as aircraft loading jack in aircraft loading procedure.

1-7. Location and Description of Major Components (cont'd)

l. Suspension System

Consists of a single point, two spring tandem axle suspension (1).

Each spring contains three leaves.

Each end of spring rests on rubber pads in spring box.

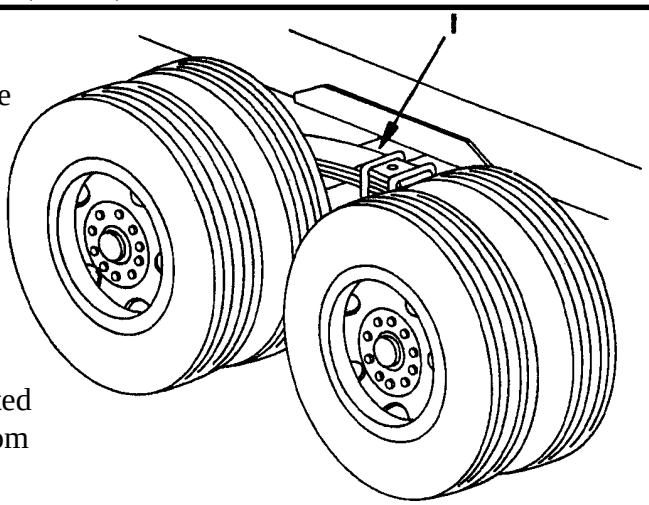

m. Dolly Electrical System

Wiring harnesses and wiring assemblies are located along the rail of the dolly frame. They extend from the electrical inlet receptacles on the front of the resistor box to running lights.

1. Light, turn and marker
   Two lights (1), one installed at each end of the dolly frame.
2. Reflector, red

   Two red reflectors (2), located just in-boar of the two turn and marker lights.
3. Light stop and turn

   Two lights (3) located just in-board of each of the two reflectors.

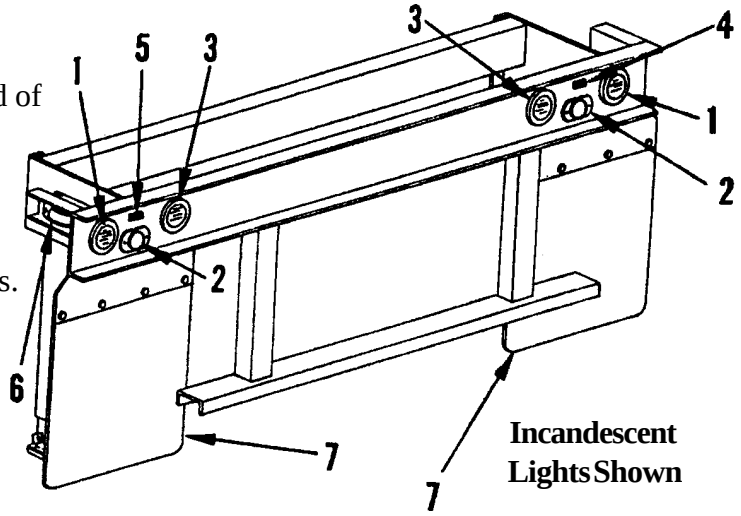

4. Light, blackout stop and right hand turn and tail

   One light (4) installed on right rear dolly frame between the two right lights and above the reflector.

5. Light, blackout stop and left hand turn and tail

   One light (5) installed on left rear dolly frame between the two left lights and above the reflector.

6. Light, clearance, red

   Two lights (6), one at each bottom rear side of dolly frame.

n. Splash Guard

A splash guard (7) is installed at rear of each rear wheel.

1-7. Location and Description of Major Components (cont'd)

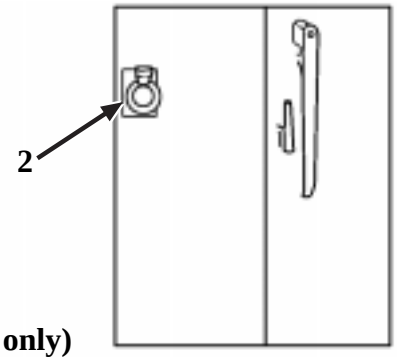

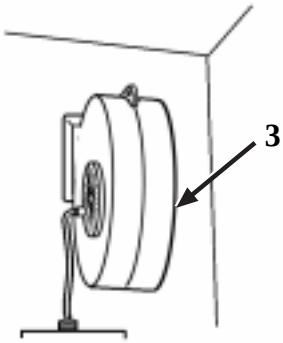

o. Tool Box Assembly (M129A4 only)

Tool box assembly (1) is located on the left rear floor, to rear of van interior.

p. Power Inlet Assembly (M129A4 only)

Power inlet (2) is used to connect 110-volt external power source to semitrailer through power inlet access door. Power inlet is located at left side rear of semitrailer.

q. Fan Assembly (M129A4 only)

Fan assembly (3), in conjunction with two vents on interior front wall of trailer, circulates air throughout interior of semitrailer. Fan assembly has two air speeds.

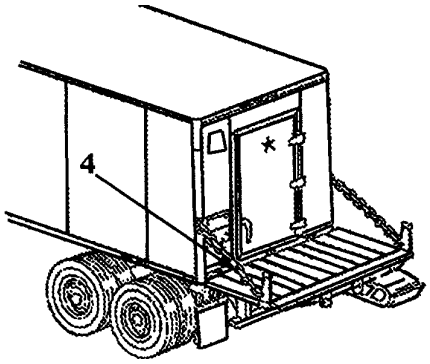

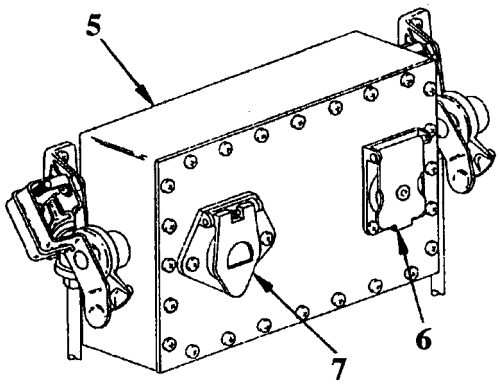

XM1063 Shown

r. Rear Platform (M129A4 only)

Used to gain access to interior of semitrailer. Platform (4) is attached to body by hinges and is raised and lowered manually. Platform can be stowed upright against rear van body. Because of its weight, two persons are required to raise/lower platform.

s. Electrical Input Receptacles

Two electrical input receptacles are located on the resistor box (XM1063) or voltage converter box (M129A4) (5) at the exterior wall of the van. The 24-volt, 12-pin receptacle (6) is located to the right of the 12-volt, 7-pin receptacle (7). XM1063 has a system of resistors in the resistor box that make it possible to use a towing vehicle with either a 12-volt or 24-volt electrical system. M129A4 has solid state components in the voltage converter box that make it possible to use a towing vehicle with either a 12-volt or 24-volt electrical system. M129A4 Registration Numbers NX0RKB and Subsequent LED lighting system voltage converter boxes no longer contain fuses/ circuit breakers.

1-8. Identification Plate

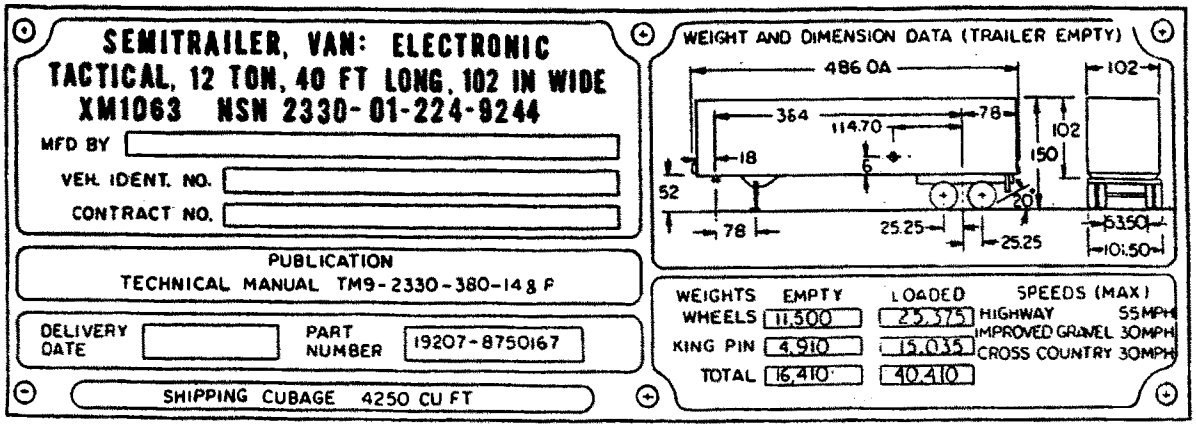

NOTE

Identification plates for the XM1063 and M129A4 semitrailers are similar. Identification plate for the XM1063 is shown.

Identification plate lists name of vehicle, National Stock Number (NSN), manufacturer's serial number, contract number, publications concerning the vehicle, delivery and inspection dates, weight and dimension data and shipping cubage.

The name and data identification plate (1) is located on from right side of semitrailer.

M129A4 has a transportability plate (2) on front right side of semitrailer.

The Army registration number for the vehicle is located on the inside of the rear door.

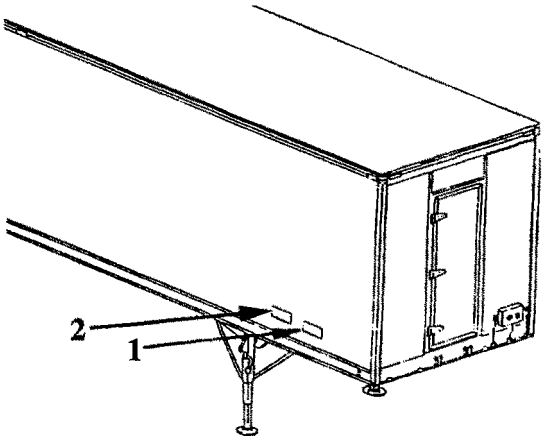

1-9. Identification Markings

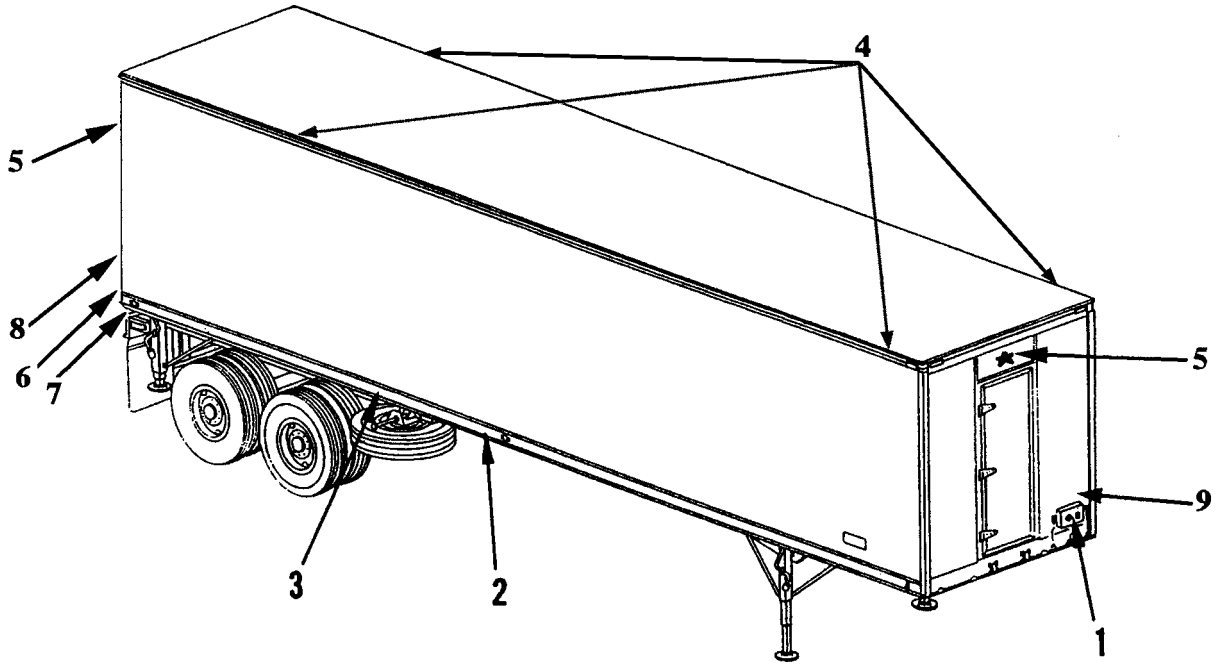

The following list shows the location and wording of the stencil markings used on the semitrailer:

1. HOT SURFACE. DO NOT TOUCH (XM1063 only).
2. USE FOR LIFT ONLY (four places).
3. 70 PSI COLD (XM1063 only, four places).
   TP 70 (M129A4 only, four places).
4. TIE DOWN (M129A4 only, 12 places).
5. STAR ★ (M129A4 only, on rear door and front panel).
6. 75 LBS. 2 PERSONS REQUIRED TO LIFT OR LOWER PLATFORM/LADDER (M129A4 only, on rear van body).
7. 75 LBS. 2 PERSONS REQUIRED TO LIFT OR LOWER PLATFORM (M129A4 only, on rear platform).
8. U.S. ARMY REGISTRATION NUMBER (M129A4 only, on lower rear door).
9. WEDGES MUST BE IN (M129A4 only, on front panel).

1-10. Equipment Data

a. XM1063:

Towing facility	kingpin	
Dimensions:		
Overall length	486 in	(1.234.4 cm)
Overall width	102 in	(259.1 cm)
Kingpin to front	18 in	(45.7 cm)
Kingpin to center of axle	384 in	(975.4 cm)
Overall height (operational)	150 in	(381.0 cm)
Overall height (reduced)	102 in	(259.1 cm)
Weight:		
Weight (empty)	16,410 lbs	(7,450.1 kg)
Weight on kingpin (empty)	4,910 lbs	(2,229.1 kg)
Weight on wheels (empty)	11,500	(5,221.0 kg)
Weight (loaded)	40,410 lbs	(18,346.1 kg)
Weight on kingpin (loaded)	15,035 lbs	(11,520.3 kg)
Weight of dolly	5,570 lbs	(2,528.8 kg)
Cubage	4,250 cu ft	(1,190 cu m)
Axle, Tubular	20,000 lbs	(9,080 kg)
Brake system:		
Actuation	air	
Brake assemblies	4 sets	
Electrical system:		
Voltage- Military application	24-volt dc	
Voltage- Commercial application	12-volt dc	
Power source	towing vehicle	
Tires:		
Number	eight (plus spare)	
Type	commercial tube-type	
Design	highway tread	
Number of plies	12-ply rating (“F” load range)	
Tire Inflation:		
Highway	70 psi	(482.65 kg)
Cross country	45 psi	(310.28 kPa)
Sand, mud, snow	45 psi	(310.28 kPa)
Landing gear	Separately operated	
Fording depth	60 in	(152.4 cm)

1-10. Equipment Data (cont'd)

b. M129A4:

Towing facility	kingpin	
Dimensions:		
Overall length (platform retracted)	445 in	(1130.3 cm)
Overall length (platform extended)	467 in	(1186.18 cm)
Overall width	96 in	(243.84 cm)
Kingpin to front	18 in	(45.7 cm)
Kingpin to center of axle	324 in	(822.96 cm)
Overall height (operational)	150 in	(381.0 cm)
Overall height (reduced)	102 in	(259.1 cm)
Weight:		
Weight (empty)	15500 lbs	(7037 kg)
Weight on kingpin (empty)	4140 lbs	(1879.56 kg)
Weight on wheels (empty)	11360 lbs	(5157.44 kg)
Weight (loaded)	38500 lbs	(17479 kg)
Weight on kingpin (loaded)	13920 lbs	(319.68 kg)
Weight on wheels (loaded)	25580 lbs	(11613.32 kg)
Weight of dolly	5,570 lbs	(2,528.8 kg)
Cubage	3976 cu ft	(111.33 cu m)
Axle, Tubular	20,000 lbs	(9,080 kg)
Brake system:		
Actuation	air	
Brake assemblies	2 sets	
Electrical system:		
Voltage-Military application (LED and incandescent)	24-volt dc	
Voltage-Commercial application (LED and incandescent)	12-volt dc	
Power source	towing vehicle	
Tires:		
Number	eight (plus spare)	
Type	commercial radial-type	
Design	highway tread	
Number of plies	12-ply rating ("G" load range)	
Tire Inflation:	70 psi	(482.65 kg)
Landing gear	Separately operated	
Fording depth	48 in	(121.92 cm)

1-11. Air Brake System

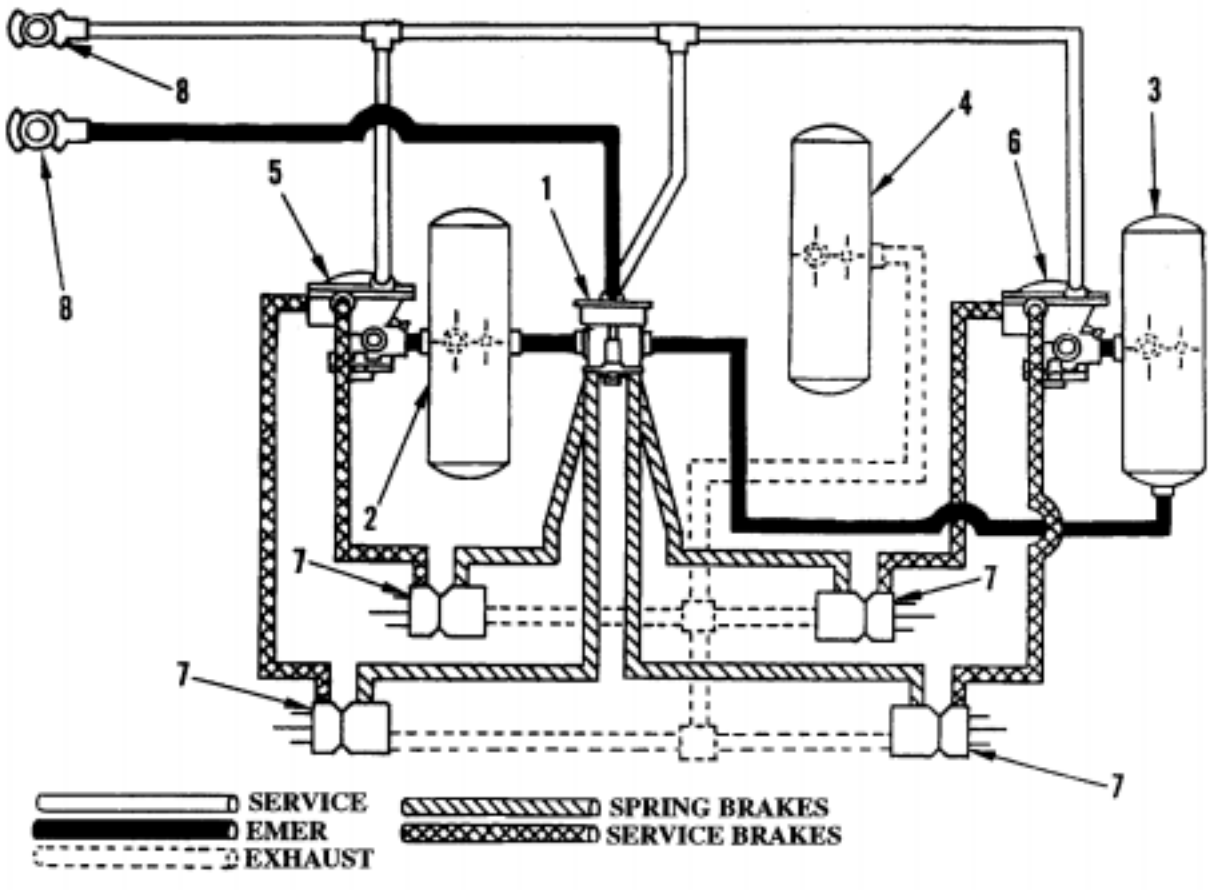

1. Ratio relay valve
2. Front reservoir
3. Rear reservoir
4. Reserve reservoir (XM1063)
5. Front relay valve
6. Rear relay valve
7. Air chamber
8. Gladhand

When the gladhands (8) are connected between the towing vehicle and the semitrailer, air shutoff valves on the towing vehicle are opened.

Air flows through the emergency air lines into the ratio relay valve (1). The air from the emergency air lines flows from the ratio relay valve (1) into the front and rear air reservoirs (2 and 3). From each of these reservoirs the emergency air to each relay valve (5 and 6). The emergency air pressure is built up in the semitrailer to equal the air pressure on the towing vehicle, 90 - 100 psi (630.5 - 758.5 kPa).

When pressure is applied to the brake pedal on the towing vehicle, air pressure is directed through the service air line to the ratio relay valve (1) and to the two relay valves (5 and 6).

The two relay valves release compressed emergency air to the service brake sections of the front air chambers.

1-11. Brake System (cont'd)

The brake air chamber push rod extends to contact the air chamber yoke. This contact turns the slack adjuster which is connected to the yoke and is splined into the splines of the camshaft.

The camshaft turns as the slack adjuster turns, thus forcing the lining of the brake shoe against the brake drum.

When the brake pedal is released, a drop in pressure causes the relay valves (5 and 6) to release the compressed air from the semitrailer braking system. With the air released, the brake return springs pull the brake shoes away from the drums.

When the air pressure in the semitrailer brake system falls below 60 psi (413.7 kPa), the ratio relay valve (1) automatically releases emergency air from the spring brake sections of the air chambers (7).

The spring brake section of the air chamber contains an emergency brake application spring. As the emergency air exhausts this section of the air chamber, the spring is released.

The camshaft turns as the adjuster turns, forcing the lining of the brake shoe against the brake drum.

The middle air reservoir (XM1063 only) (4) acts as a surge tank to accept exhaust air from the non-pressure side of the service chamber in order to prevent water from entering the system during fording operations.

In event of an emergency stop resulting from a loss of air or a complete failure of the braking system, a brake caging procedure may be used to move the semitrailer off the traveled portion of the highway. The brake caging procedure is to be used for this purpose only (refer to para. 2-27).

CHAPTER 2
OPERATING INSTRUCTIONS

Section I. DESCRIPTION AND USE OF OPERATOR'S CONTROLS AND INDICTORS

For location and description of the major subassemblies of the XM1063 and M129A4 semitrailers, refer to Chapter 1.

Section II. OPERATOR PREVENTIVE MAINTENANCE CHECKS AND SERVICES (PMCS)

2-1. General

a. To ensure that the XM1063 or M129A4 semitrailer is ready for operation at all times, it must be inspected on a regular basis. So that defects may be found before they result in serious damage, equipment failure or injury to personnel. This section contains systematic instructions on inspections, adjustments and corrections to be performed by the operator/crew.

b. While performing Preventive Maintenance Checks and Services (PMCS), read and follow all safety instructions found in the warning summary at the front of the manual. Keep in mind all WARNINGs and CAUTIONs.

2-2. Service Intervals

Perform the PMCS procedures listed in Table 2-1 at the following intervals:

Perform **B**efore PMCS just before operating the semitrailer.
Perform **D**uring PMCS while operating the semitrailer.
Perform **A**fter PMCS right after operating the semitrailer.
Perform **W**eekly PMCS once each week.
Perform **M**onthly PMCS once each month.

2-3. Reporting Repairs

All defects that the operator cannot fix must be reported on a DA Form 2404, Equipment Inspection and Maintenance Worksheet, immediately after completing PMCS. If a serious problem is found, IMMEDIATELY report it to your supervisor.

2-4. General PMCS Procedures

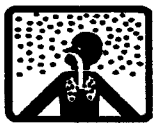

WARNING
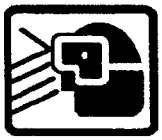


Dry cleaning solvent (PD-680) is toxic and flammable. Avoid prolonged breathing of vapors. Avoid skin contact. use only in well-ventilated area. Keep away from open flame. Flash point of solvent is 138° (50°C).

a. Keep it clean: Dirt, grease, oil and debris only get in the way and may cover up a serious problem. Clean as you work and as needed. Use dry cleaning solvent (item 3, Appendix E) on all metal surfaces. Use soap and water when you clean rubber or plastic material

b. While performing specific PMCS procedures, inspect the following components:

Bolts, nuts and screws: Check them all for obvious looseness, missing, bent or broken condition. You can't try them all with a tool, but look for chipped paint, bare metal or rust around bolt heads. If you find one you think is loose, tighten it or report it to unit maintenance

Welds: Look for loose or chipped paint, rust or a gap where parts are welded together. If you find a bad weld, report it to unit maintenance.

Electric wires and connectors: Look for cracked, frayed or broken insulation, bare wires and loose connectors. Tighten all loose wires and connectors as required.

Hoses and fluid lines: Look for wear, damage and leaks. Make sure clamps and fittings are tight. Wet spots show leaks of course, but a stain around a fitting or connector can mean a leak. If a leak comes from a loose fitting or connector, tighten it. If something is broken or worn out, report it to unit maintenance.

c. Check to see that components are adequately lubricated in accordance with Appendix I, Lubrication Instructions.

2-5. Specific PMCS Procedures

a. Operator/Crew PMCS is provided in Table 2-1. Always perform PMCS procedures in the order listed. Once they become routine, spotting problems will be much easier.

b. Before performing PMCS, read all checks required for the applicable interval and prepare all tools needed for the task. Have several clean rags (item 14, Appendix E) ready for use.

c. If any problems are discovered through PMCS, perform appropriate troubleshooting task as described in Chapter 3. If any component or system is not serviceable, or if any service does not correct the problem, notify your supervisor.

2-5. Specific PMCS Procedures (cont'd)

d. Explanation of column headings in Table 2-1 are as follows:

Item No. The item number column of your PMCS table is used for reference. When completing DA Form 2404, include the item number for the check/service indicating a fault. Item numbers also appear in the order that you must do checks and services for the intervals listed.

Interval. This column of your PMCS table tells you when to do a certain check or service.

Item to be inspected. This column of your PMCS table names the item to be checked or serviced.

Procedure. This column of your PMCS table tells you how to do the required checks and services. Carefully follow these instructions. If you do not have the tools, or the procedure tells you to, have unit maintenance do the work.

Not Fully Mission Capable If: This column tells you when and why your equipment cannot be used.

2-6. Leakage Definitions

a. It is important to know how fluid leakage affects the status of the semitrailer. The following are definitions of the types/classes of leakage an operator must know to be able to determine whether the semitrailer is mission capable. Learn these leakage definitions. When in doubt, notify your supervisor.

Class I: Seepage of fluid (as indicated by wetness or discoloration) not great enough to form drops.

Class II: Leakage of fluid great enough to form drops, but not enough to cause drops to drip from item being checked/inspected.

Class III: Leakage of fluid great enough to form drops that fall from the item being checked/inspected.

CAUTION

Equipment operation is allowable with minor leakages (Class I or II). Of course, consideration must be given to the fluid capacity in the item/system being checked/ inspected. When in doubt, notify your supervisor. Operation with major leakages may cause equipment damage.

When operating with Class I or II leaks, continue to check fluid levels as required in your PMCS. Class III leaks should be reported to your supervisor or unit maintenance.

b. Equipment operation is allowed with minor leakages (Class I or II). Fluid levels in an item/system affected with such leakage must be checked more frequently than required in PMCS. When in doubt, notify your supervisor.

c. Report Class III leaks IMMEDIATELY to your supervisor or unit maintenance.

Table 2-1 Operator/Crew Preventive Maintenance Checks and Services

NOTE

Within the designated interval, perform checks in the order listed.

B-Before **D-During** **A-After** **W-Weekly** **M-Monthly**

Item No.	Interval B	D	A	W	M	ITEM TO BE INSPECTED (Procedures: check for and have repaired, filled or adjusted as needed)	Equipment Not Ready Available if:
						WARNING	
						Ensure towing vehicle kingpin wedges are in place during operations on other than paved roads. Failure to follow this warning could result in serious injury or death to personnel	
						NOTE	
						Perform Weekly as well as Before PMCS if you are the assigned operator, but have not operated the vehicle since the last Weekly PMCS OR you are operating the vehicle for the first time.	
1						KINGPIN	
	•					Inspect kingpin and pickup plate for cracks and damage.	Kingpin is missing, cracked or broken.
2						RESISTOR BOX (XM1063)/VOLTAGE CONVERTER BOX (M129A4) Excluding Registration Numbers NX0RKB and Subsequent.	
	•					Check for obvious damage or missing parts.	One or more fuses/ circuit breakers missing.
3						INTERVEHICULAR CABLE	
	•					Check terminals for corrosion or damage, missing or damaged pins.	Terminals are damaged.
4						BRAKES (AIR)	
	•					a. Inspect brake hose couplings (gladhands) for security/damage	Gladhand is missing, broken or damaged.

Table 2-1 Operator/Crew Preventive Maintenance Checks and Services

NOTE

Within the designated interval, perform checks in the order listed.

B-Before **D-During** **A-After** **W-Weekly** **M-Monthly**

Item No.	Interval B	D	A	W	M	ITEM TO BE INSPECTED (Procedures: check for and have repaired, filled or adjusted as needed)	Equipment Not Ready Available if:
	•					b. Couple towing vehicle air hoses to semitrailer and check for air leaks.	Any air leak is present.
5						LIGHTS **NOTE** **An assistant is required when checking semitrailer lights.**	
	•					a. Visually inspect receptacles for secure mounting or damage.	
	•					b. Inspect receptacle pins for foreign matter build up, bent, burnt or broken pins.	
	•					c. If tactical situation permits, connect towing vehicle electrical cable to semitrailer. Check all lights for proper operation.	Brake and taillights are inoperable.
6						LANDING GEAR/LEVELING JACK **NOTE** **M129A4 Registration Numbers NX0QVH through NX0RC9 semitrailers do not include leveling jacks.**	
	•					a. Inspect crank, landing legs, drop legs and gearbox for damage and secure mounting.	Securing pin on leg missing or damaged. Landing leg inoperable.
	•					b. When cranking landing gear, check that shaft turns smoothly and that leg moves without binding or grinding.	Landing leg binding or inoperable.

Table 2-1 Operator/Crew Preventive Maintenance Checks and Services

NOTE

Within the designated interval, perform checks in the order listed.

B-Before **D-During** **A-After** **W-Weekly** **M-Monthly**

Item No.	Interval B	Interval D	Interval A	Interval W	Interval M	ITEM TO BE INSPECTED (Procedures: check for and have repaired, filled or adjusted as needed)	Equipment Not Ready Available if:
7						TIRES	
	•					Check tires for obviously low pressure, deep cuts, foreign objects or unusual tread wear. (TM 9-2610-200-24). Remove stones caught between tires and threads.	Two or more tires are flat, missing or unserviceable.
						WHEELS **NOTE** **Left wheel nuts are turned counterclockwise to tighten and clockwise to loosen. right wheel nuts are turned cockwise to tighten and counterclockwise to loosen.**	
8						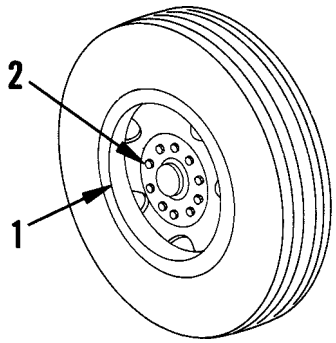	
	•					Check wheels (1) for damage and for loose or missing wheel nuts (2). If loose, tighten and notify unit maintenance.	Four or more wheel nuts on one wheel missing or wheel damaged.
9						SUSPENSION	
	•					Inspect springs and suspension for looseness, damaged, broken or missing components.	Damaged, loose, broken or missing components are evident.

Table 2-1 Operator/Crew Preventive Maintenance Checks and Services

NOTE

Within the designated interval, perform checks in the order listed.

B-Before **D-During** **A-After** **W-Weekly** **M-Monthly**

Item No.	Interval B	D	A	W	M	ITEM TO BE INSPECTED (Procedures: check for and have repaired, filled or adjusted as needed)	Equipment Not Ready Available if:
						SUSPENSION (cont'd.) 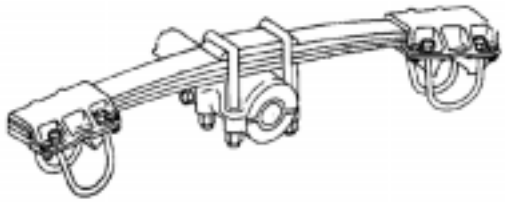	
10						AIR RESERVOIR 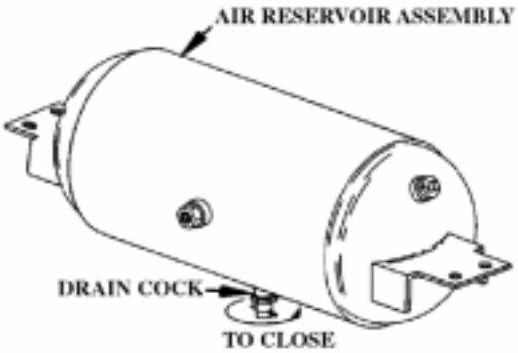	
	•					a. Make sure air reservoir drain cock is closed.	Any air reservoir is leaking or damaged. Both fire extinguishers missing. Safety pin or seal is missing or damaged.
	•					b. Inspect air reservoir for damage and evidence of leaking.	
11						FIRE EXTINGUISHER	
	•					a. Inspect for presence of ABC -type fire extinguishers.	

Table 2-1 Operator/Crew Preventive Maintenance Checks and Services

NOTE

Within the designated interval, perform checks in the order listed.

B-Before **D-During** **A-After** **W-Weekly** **M-Monthly**

Item No.	Interval B	Interval D	Interval A	Interval W	Interval M	ITEM TO BE INSPECTED (Procedures: check for and have repaired, filled or adjusted as needed)	Equipment Not Ready Available if:
11						FIRE EXTINGUISHER (cont'd.)	
	•					b. Check that fire extinguisher needle is in green zone.	Both fire extinguisher needles are out of green zone.
	•					c. Visually inspect bracket for obvious damage.	
12		•				VAN BODY Open and Close doors to check that hinges work properly.	Two or more hinges are damaged or missing.
13		•				BRAKES (AIR) a. Check for proper operation of the brakes by applying vehicle brakes and attempting to pull vehicle forward.	Brakes fail to operate.
		•				b. Apply semitrailer brakes several times and check for grabbing, pulling or slow brakes.	Grabbing, pulling or slow brakes. Vehicle pulls to side or wanders.
		•				c. Pull semitrailer straight ahead and check for side pull, wander, shimmy or slack between kingpin and fifth wheel lock.	
14		•				LANDING GEAR When cranking landing gear, check that shaft turns smoothly and that leg moves without binding or grinding.	Landing leg binding or inoperable.

Table 2-1 Operator/Crew Preventive Maintenance Checks and Services

NOTE

Within the designated interval, perform checks in the order listed.

B-Before **D-During** **A-After** **W-Weekly** **M-Monthly**

Item No.	Interval B	D	A	W	M	ITEM TO BE INSPECTED (Procedures: check for and have repaired, filled or adjusted as needed)	Equipment Not Ready Available if:
15						GENERAL OPERATIONS	
		•				Be alert for unusual noises or abnormal conditions that might indicate load shifting or defective performance.	
16						TIRES	
			•			XM1063: Check tires, including spare, for correct pressure: Highway- 70 psi (482.65kPa), sand or mud- 45psi (310.28 kPa)	
						M129A4: Check tires for correct pressure: 70 psi (482.62 kPa)	
17						BRAKES (AIR)	
			•			**WARNING**	
						A hot brake can cause serious burns. Exercise caution before attempting to touch drum after use. If drum is over heated, radiated heat will be felt before drum is touched.	
			•			Cautiously feel brake drum for abnormal heat or cold. An abnormally hot drum indicates a possible dragging or grabbing drum. An abnormally cool drum indicates improper adjustment or defective brake.	Brake drum abnormally hot

Table 2-1 Operator/Crew Preventive Maintenance Checks and Services

NOTE

Within the designated interval, perform checks in the order listed.

B-Before **D-During** **A-After** **W-Weekly** **M-Monthly**

Item No.	Interval B	D	A	W	M	ITEM TO BE INSPECTED (Procedures: check for and have repaired, filled or adjusted as needed)	Equipment Not Ready Available if:
18						AIR RESERVOIR 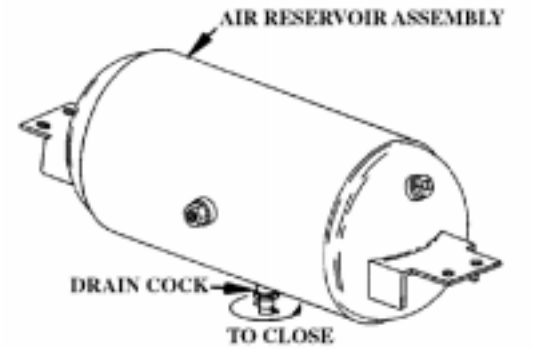 	
			•			Drain air reservoir after use.	
19						WHEELS **NOTE** **Left wheel nuts are turned counterclockwise to tighten and clockwise to loosen. Right wheel nuts are turned clockwise to tighten and counterclockwise to loosen.** 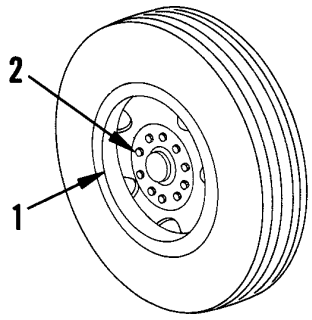 	
			•			Check wheels (1) for damage and for loose or missing wheel nuts (2). If loose, tighten and notify unit maintenance.	Four or more wheel nuts on one wheel missing or wheel damaged.

Table 2-1 Operator/Crew Preventive Maintenance Checks and Services

NOTE

Within the designated interval, perform checks in the order listed.

B-Before **D-During** **A-After** **W-Weekly** **M-Monthly**

Item No.	Interval B	D	A	W	M	ITEM TO BE INSPECTED (Procedures: check for and have repaired, filled or adjusted as needed)	Equipment Not Ready Available if:
20						VAN BODY	
				•		Visually inspect parts such as doors and spare wheel carrier (XM 1063 only) for damage. Check for signs of water damage.	
21						FRAME AND ASSOCIATED PARTS	
				•		a. Perform general inspection of body, ladder, landing gear plate and lifting arms.	
				•		b. Visually inspect rear platform (M129A4 only). Ensure that clamps are in good working order.	

Section III. OPERATION UNDER USUAL CONDITIONS

2-7. General

a. This section contains instruction for safely operating the semitrailer under usual conditions. Unusual conditions are defined and described in section IV of this chapter.

b. Before operating a reconditioned semitrailer, make sure unit maintenance services the vehicle.

c. Perform all BEFORE PMCS listed in Table 2-1 before operating the semitrailer.

d. To prepare for coupling and uncoupling operations, review all towing instructions in the operator's manual for the towing vehicle.

2-8. Coupling Semitrailer To Towing Vehicle

WARNING

Be sure all personnel stand clear of towing vehicle and semitrailer during coupling and uncoupling operations or serious injury may occur.

Ensure towing vehicle kingpin wedges are in place during operations on other than paved roads. Failure to follow this warning could result in serious injury or death to personnel.

a. Slowly back towing vehicle into position. Be sure kingpin (1) is in line with fifth wheel coupler jaws (3).

b. Before kingpin plate (2) starts to ride the approach ramps (4), check that kingpin plate (2) is above the approach ramps (4).

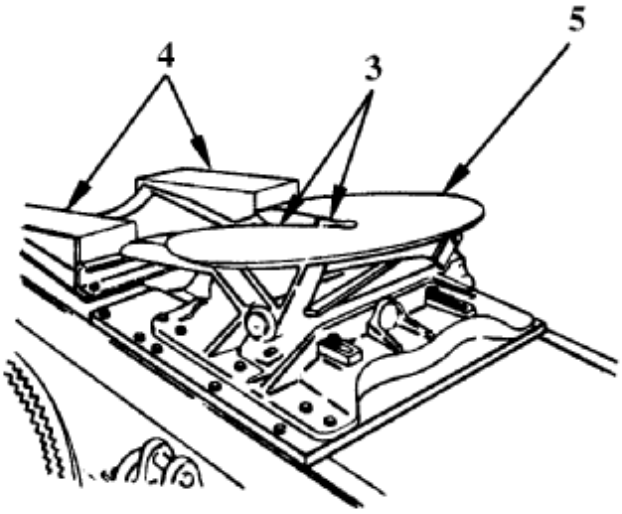

WARNING

To avoid injury to personnel or damage to equipment, a ground guide must assist in raising and lowering landing gear legs

c. Adjust height as needed by using landing gear. Make sure coupler jaws (3) are open.

d. Slowly back towing vehicle until coupler jaws (3) engage kingpin.

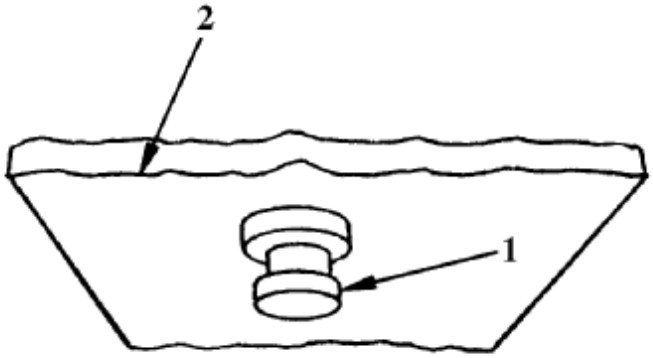

CAUTION

Visually check coupling. You should not be able to see daylight between fifth wheel (5) and kingpin plate (2). If light shows, lower kingpin plate, using landing gear. If coupling is not done properly, equipment damage may result.

e. Make sure coupling is secure by inching forward. Locked, rock back and forth slowly until kingpin (1) is locked in fifth wheel.

2-8. Coupling Semitrailer To Towing Vehicle (cont'd)

f. Raise spring loaded covers (6) on gladhands on front of semitrailer.

NOTE

XM1063 gladhands and M129A4 gladhands operate in the same manner. XM1063 gladhands are shown.

g. Connect coupling marked SERVICE on towing vehicle air hose (7) to gladhand marked SERVICE (8) on semitrailer.

h. Connect coupling marked EMERGENCY on towing vehicle air hose to gladhand marked EMERGENCY (9) on semitrailer.

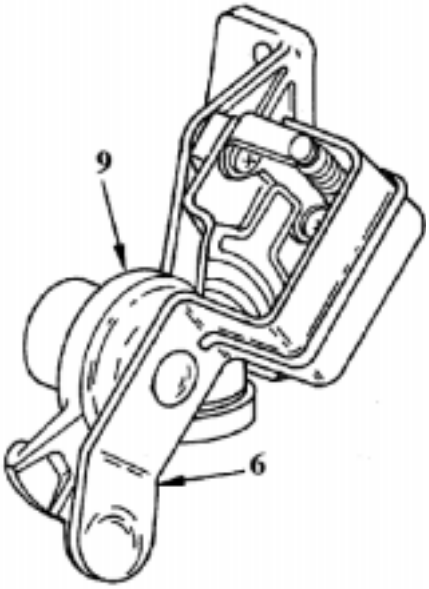

NOTE

XM1063 has three air reservoirs. M129A4 has two air reservoirs. Make sure all air reservoirs are closed.

i. Check all air reservoirs (10) and make certain all drain cocks (11) are closed.

j. Open two air shut-off valves on towing vehicle to pressurize semitrailer air system.

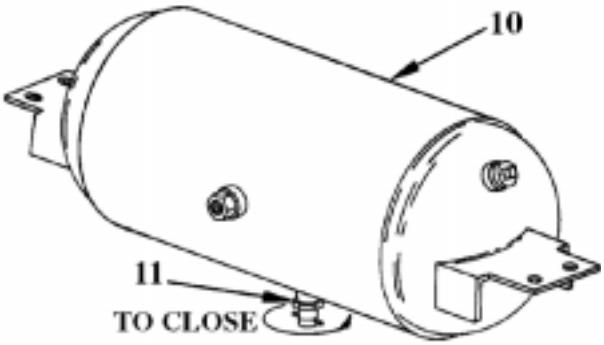

2-8. Coupling Semitrailer To Towing Vehicle (cont'd)

WARNING

Ladder is heavy. Two persons are required to remove/install ladder.

k. Unlatch and remove boarding ladder. Stow ladder in brackets underneath van body (XM1063) or on rear platform (M129A4).

l. Turn landing gear crank (12) counterclockwise to raise landing gear leg (13).

NOTE

Leveling jacks are provided on the M129A4 Registration Numbers NX0QVH through NX0RC9 and XM1063 only.

m. Turn leveling jack crank (12) counterclockwise to raise leveling jack leg (13).

NOTE

Make sure to use the proper receptacle, either 24-volt or 12-volt; depending on the electrical system of the towing vehicle.

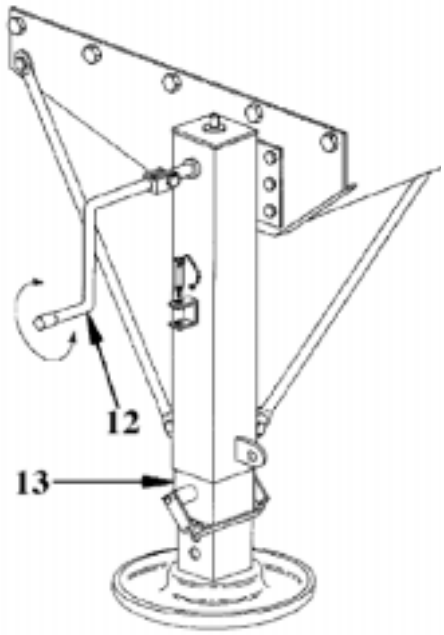

n. Plug towing vehicle intervehicular cable (14) into receptacle (15) on front of semitrailer.

o. Check to see that all lights are in working order.

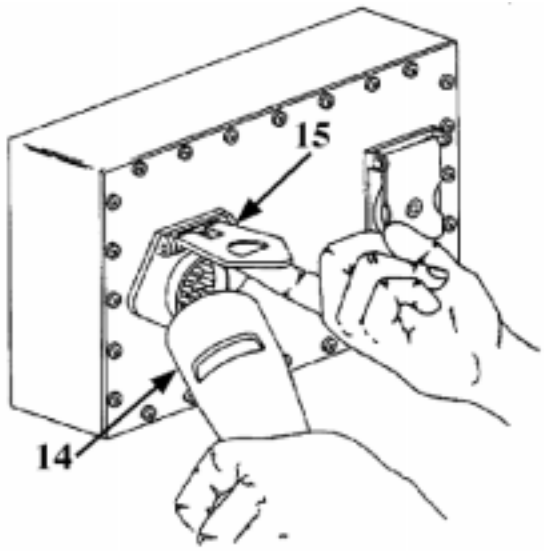

XM1063 Shown

2-9. Towing Instructions

WARNING

Ensure towing vehicle kingpin wedges are in place during operations on other than paved roads. Failure to follow this warning could result in serious injury or death to personnel.

a. Driving

(1) When driving towing vehicle and semitrailer, the overall length of the unit must be kept in mind when when passing other vehicles and when turning.

(2) Because the unit is hinged in the middle, turning and braking also are affected.

(3) The semitrailer's payload will affect stopping and off road maneuverability.

b. Turning

(1) When turning corners, allow for the fact that the semitrailer wheels turn inside the turning radius of the towing vehicle.

(2) To make a right turn at a road intersection, drive towing vehicle about halfway into the intersection and then cut sharply to the right. This will allow for the shorter turning radius of the semitrailer and will keep it off the curb.

c. Stopping

(1) In normal operation, the brakes of the towing vehicle and semitrailer are applied at the same time the driver steps on the brake pedal.

(2) Brake pressure must be applied gradually and smoothly.

(3) Semitrailer brakes may be applied separately by using brake control lever on towing vehicle steering column.

(4) On steep down grades or slippery surfaces, semitrailer brakes must be applied before towing vehicle brakes. This will reduce the possibility of jack-knifing the semitrailer.

d. Parking

(1) When towing vehicle and semitrailer are to be parked and left unattended, set parking brake on towing vehicle.

(2) Turn off towing vehicle before leaving cab.

e. Backing

(1) The assistant driver or another person will act as ground guide to assist and direct the driver.

(2) Adjust all rear view mirrors before backing.

2-9. Towing Instructions (cont'd)

(3) When backing, rear of semitrailer will always move in the opposite direction of the front wheels. When wheels of towing vehicle are turned right, rear of semitrailer will go left.

(4) When the semitrailer has turned and backing in a straight line is required, turn towing vehicle wheels in the direction semitrailer is moving. This will slowly bring towing vehicle and semitrailer into a straight line.

2-10. Uncoupling Semitrailer From Towing Vehicle

NOTE

Make sure there is firm footing under landing gear and leveling jack drop leg assemblies before lowering landing gear or leveling jack legs. Use sand plate (M129A4 only), if necessary.

XM1063 landing gear/leveling jack is shown

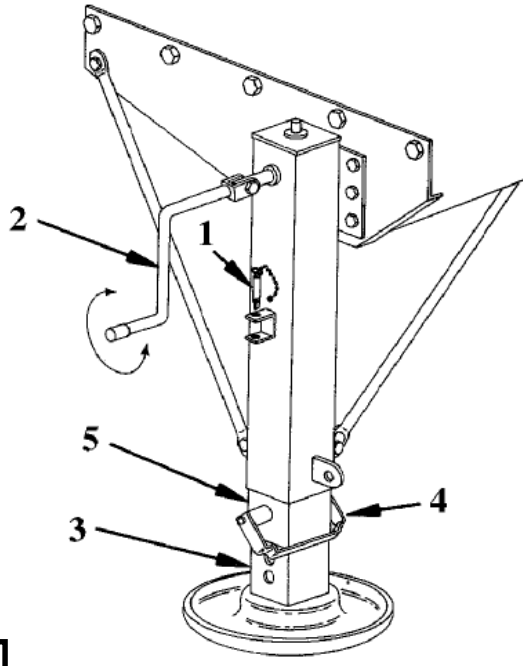

a. Lift drop leg release handle (4) and lower drop leg (3) to lowest position before contacting ground.

b. Remove pin (1) from crank holder bracket and move crank (2) to cranking position.

c. Turn both cranks (2) clockwise to lower landing gear legs (5) until drop leg assemblies (3) support front of semitrailer.

d. Close shutoff valves on towing vehicle air lines.

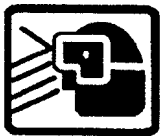

WARNING

Wear goggles when opening air reservoir drain cock. Failure to do so could cause serious eye injury from high pressure air.

e. Open three air reservoir drain cocks on XM1063 and two air reservoir drain cocks on M129A4.

2-10. Uncoupling Semitrailer From Towing Vehicle (cont'd)

f. Raise gladhand spring loaded covers (6).

g. Disconnect intervehicular air hoses (7) from semitrailer gladhands (8).

h. Disconnect intervehicular electrical cable.

i. Release kingpin lock on the fifth wheel and drive towing vehicle away from semitrailer.

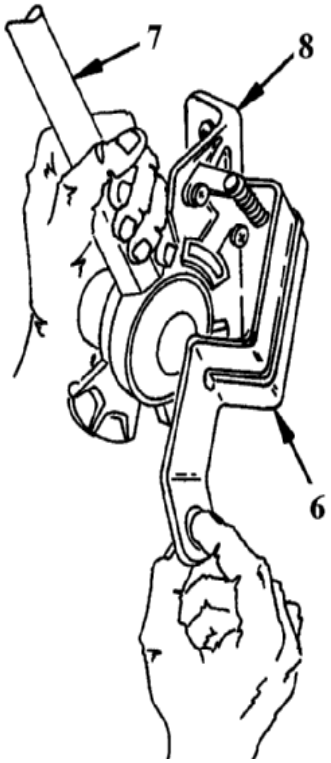

2-11. Preparing Semitrailer For Operation

a. Uncouple from towing vehicle (para. 2-10).

NOTE

Leveling jacks are provided on the M129A4 Registration Numbers NX0QVH through NX0RC9 and XM1063 only.

b. Lower landing gear and leveling jack legs (para. 2-12).

WARNING

Ladder is heavy. Two persons are required to remove/install ladder.

c. Install ladder (para. 2-13).

d. On M129A4, use power cable to connect external power source to semitrailer through power inlet receptacle. Turn switch and circuit breakers to ON position and ensure all lights, switches and receptacles operate properly.

2-12. Operating Landing Gear And Leveling Jack

WARNING

Landing gear/leveling jack is heavy. Two persons are required to remove/install landing gear/leveling jack.

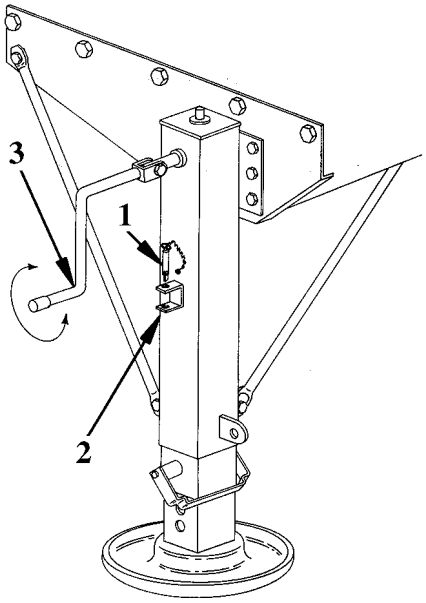

NOTE

Both the landing gear and the leveling jack operate in the same manner.

Leveling jacks are provided on the M129A4 Registration Numbers NX0QVH through NX0RC9 and XM1063 only.

a. With landing gear in normal operating position with leg contacting ground, remove pin (1) from crank holder bracket (2) and move crank (3) to cranking position.

b. Position slot in crank (3) to engage landing gear shaft. Use crank (3) to raise or lower semitrailer. Clockwise rotation raises semitrailer. Counterclockwise rotation lowers semitrailer.

2-13. Installing Boarding Ladder

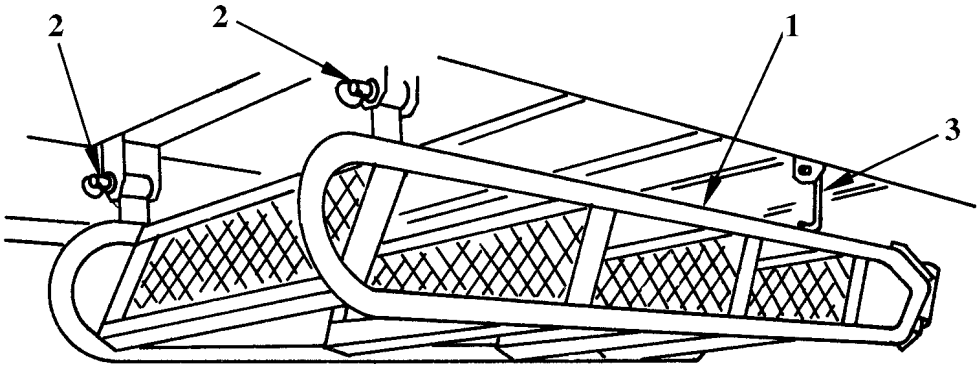

WARNING

Ladder is heavy. Two persons are required to remove/install ladder.

NOTE

XM1063 boarding ladder (1) is stowed in bracket (3) underneath body van. M129A4 boarding ladder is stowed in the same manner on the rear platform. XM1063 semitrailer is shown.

a. Remove two pins (2) securing ladder and remove ladder.

2-13. Installing Boarding Ladder (cont'd.)

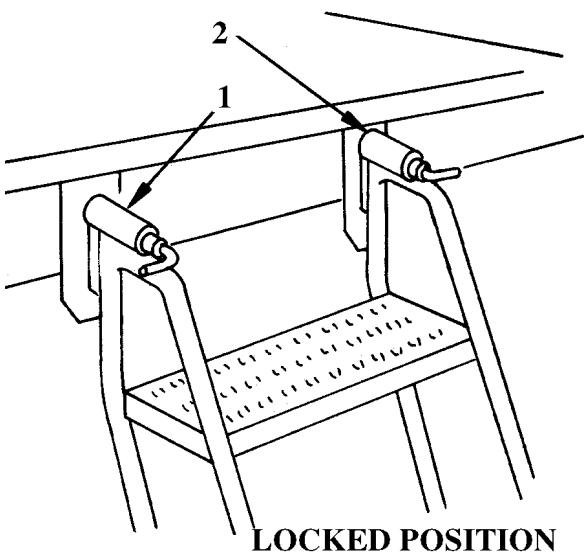

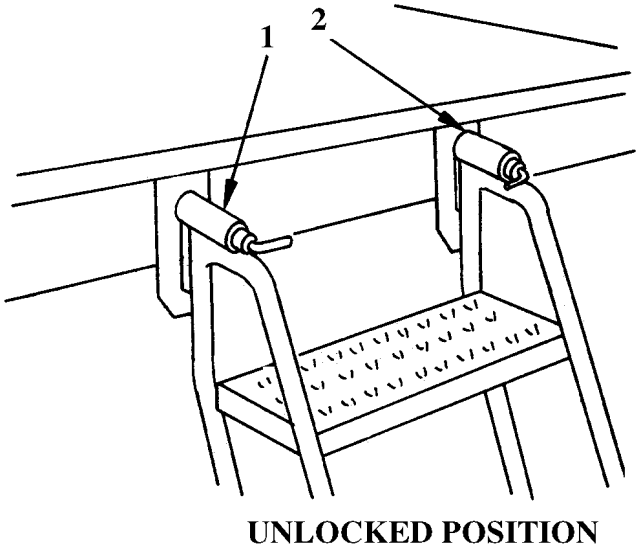

b. To install, first turn left latch handle (1) to right and right latch handle (2) to left.

c. Insert ladder ends into holes provided in bracket below each door.

d. To lock ladder in position, turn left latch handle (1) to left and right latch handle (2) to right.

2-14. Air Reservoir Drain Cock

a. The hand operated drain cock (2) is located at center and bottom of air reservoir (1).

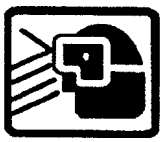

WARNING

Wear goggles when opening drain cock. Failure to do so could result in serious eye injury.

NOTE

XM1063 has three air reservoir drain cocks. M129A4 has two air reservoir drain cocks. Be sure to open/ close all drain cocks.

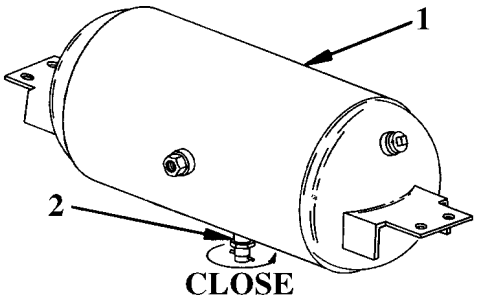

b. Turn drain cock counterclockwise to open to drain moisture and to release air pressure if brakes lock. Turn clockwise to close.

c. Open drain cocks if semitrailer is to remain inactive for any length of time.

2-15. Gladhand (Air Half-Coupling)

NOTE

XM1063 and M129A4 gladhands operate in the same manner.

XM1063 gladhands are shown.

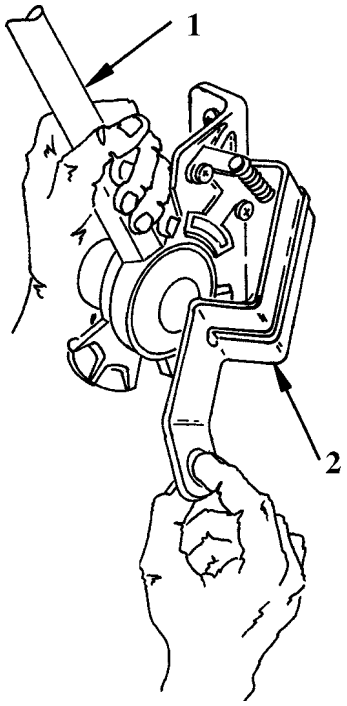

a. Lift gladhand cover (2).

b. Raise towing vehicle intervehicular air hose (1) coupling to a vertical position and align outlet holes.

c. Rotate coupling to the horizontal locked position.

2-16. Emergency Escape Mechanism

WARNING

To avoid injury to personnel, keep fingers away from door padlock catch when operating door.

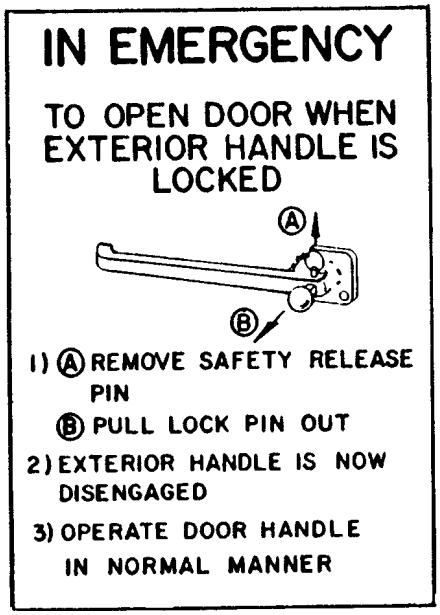

a. The rear door has a emergency escape mechanism to allow personnel to open the door from the inside, even if the outside handle is locked.

b. To disengage outside handle, pull out safety release pin (A) and pull lock pin (B) out completely.

c. Turn interior door handle clockwise and open door.

2-17. Operating Spare Wheel Carrier (XM1063 Only)

a. Removal

1. Use wheel nut wrench (1) and remove two special wheel nuts (5) securing wheel to upper member (4).
2. Position wheel nut wrench (1) on the nut at outer end of ratchet wheel (3) on which wire rope (6) is wound.
3. To lower wheel, release pawl (2) from ratchet and turn wrench counterclockwise. Continue turning counterclockwise until wheel rests on ground.
5. Let pick-up member (7) drop away from wheel.
6. Remove pick-up member (7) through center hole in wheel.

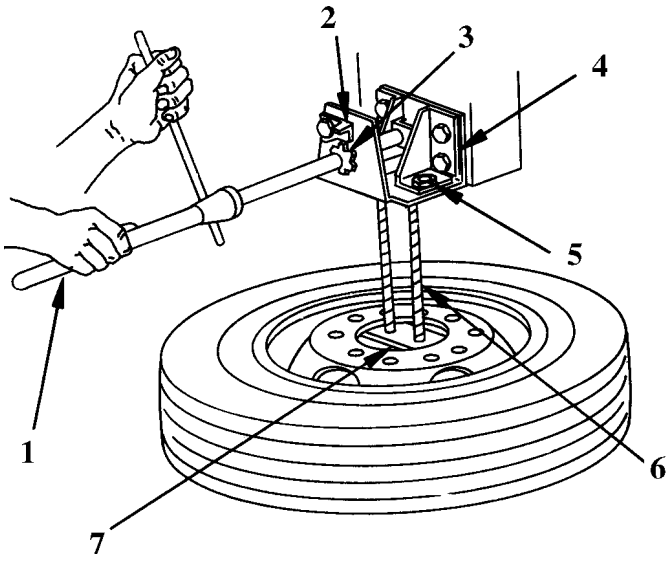

b. Installation

1. Lower pick-up member (7) to ground (refer to steps 1 through 5 of removal procedure).
2. Rotate pick-up member (7) until it aligns with wire rope (6). Slide wire rope (6) and pick-up member through center hole in wheel.
3. Rotate pick-up member (7) so that it is at right angle to wire rope (6).
4. Align securing bolts on pick-up member (7) with any two holes in wheel.
5. Position wheel nut wrench (1) on nut at outer end of ratchet wheel (3).
6. Set pawl (2) in contact with ratchet and turn wrench (1) clockwise to raise wheel and tire.
7. As wheel moves up to upper member (4), align studs on pick-up member (7) with holes in upper member (4).
8. After wheel is tight against upper member (4), install and tighten nuts (5) with wrench (1).

2-18. Operating Fire Extinguisher (M129A4 Only)

WARNING

Handle charged fire extinguisher with care. To prevent serious injury to personnel, DO NOT jar or expose to temperature above 140° F (60° C).

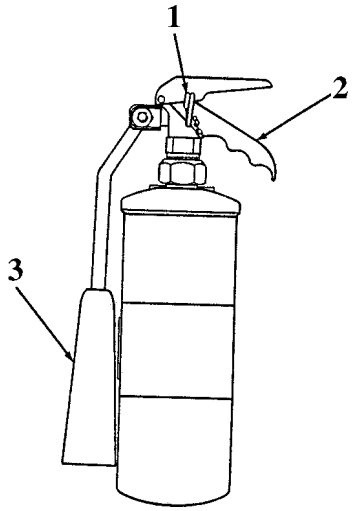

a. Remove fire extinguisher from mounting bracket by releasing clamp.

b. Rotate horn (3) to UP position. Break safety wire and remove safety pin (1).

c. Squeeze trigger (2) and aim horn (3) at base of flame.

2-19. Lowering and Raising Rear Platform (M129A4 Only)

WARNING

With lock pins removed, upper part of the platform will be loose. In both raising and lowering operations, person supporting platform must exercise care to prevent injury.

NOTE

Two persons are required to do this task, one at each edge of platform.

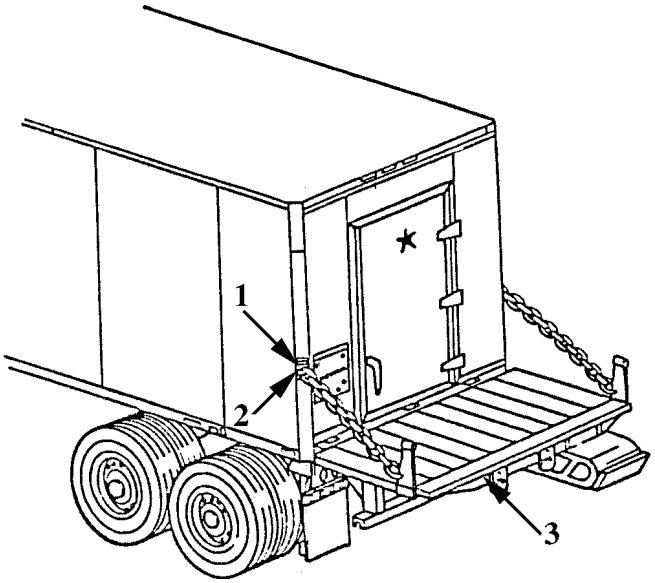

a. Lowering Rear Platform

Remove two quick release pins (1) from two upper attach plates (2). Lower platform (3) until it comes to rest on chains.

b. Raising Rear Platform

Raise platform (3) so that it rests against van body. Secure in position with two quick release pins (1) at two upper attach plates (2).

NOTE

Rear platform must be level for door to open/close properly.

Section IV. OPERATION UNDER UNUSUAL CONDITIONS

2-20. General

a. In addition to the normal preventive maintenance service, special care in cleaning and lubrication must be observed where extremes of temperature, humidity and terrain conditions are present or anticipated. Proper cleaning, lubrication and storage and handling of fuels and lubricants not only ensure proper operation and functioning, but also guard against excessive wear in the working parts and deterioration of materials.

b. FM 55-30 contains instructions on driver selection, training and supervision. FM 21-305 prescribes special driving instructions for operating wheeled vehicles under unusual conditions. A detailed study of these manuals is essential for the use of this material under unusual conditions.

c. When chronic failure of the materiel results from subjection to extreme conditions, report the condition on SF Form 368.

2-21. Operation In Extreme Cold

CAUTION

To ensure equipment is not damaged, approved practices and precautions must be followed.

a. Extensive preparation of materiels scheduled for operation in extreme cold weather is necessary. Generally, extreme cold causes lubricants to thicken or congeal, cracks insulation, causes electrical short circuits and various construction materials become hard, brittle and easily damaged or broken.

b. The operator must always be on the alert for indications of the effect of the cold weather on the semitrailer.

c. Use caution when placing the vehicle in motion after a shutdown. Congealed lubricants may cause failure of parts. Tires frozen to the ground or frozen to the shape of the flat spot while underinflated must be considered. One or more brake shoes may be frozen fast and require preheating to avoid damage to the towing vehicle clutch surfaces.

2-21. Operation In Extreme Cold (cont'd)

d. Refer to FM 9-207 for description of operation in extreme cold.

e. Refer to Appendix I for proper lubrication during extreme cold weather conditions.

f. Clean all parts of semitrailer. Remove snow, ice and mud as soon as possible after operation. Perform AFTER operations PMCS checks (refer to Table 2-1).

g. At Halt or Parking

(1) When halted for short shutdown periods, park semitrailer in a sheltered spot out of the wind. If no shelter is available, park so the rear of the semitrailer faces into the wind. For long shutdowns, if high and dry ground is not available, prepare a footing of planks or brush.

(2) Clean all parts of the semitrailer of snow, ice and/or mud as soon as possible after operation. Perform AFTER operation PMCS checks (refer to Table 2-1).

(3) Gage tires for correct pressure.

XM1063:	
Highway	70 psi (482.65 kPa)
Cross-country	45 psi (310.28 kPa)
Soft sand, mud or snow	45 psi (310.28 kPa)
M129A4	70 psi (482.65 kPa)

2-22. Operation In Extreme Heat and High Humidity

a. Refer to Appendix I for proper lubrication during extreme heat conditions. Adequate lubrication is essential. Extreme heat will cause oil films to evaporate, resulting in inadequate lubrication.

b. Keep tires protected from direct sunlight to prevent increases in air pressure and deterioration of rubber.

c. Cover inactive semitrailer with tarpaulins, if they are available and there is no other shelter. Shake out and air canvas covers or other items subject to deterioration from mildew or attacks by insects or vermin for several hours weekly.

d. Semitrailers, inactive for long periods of time in hot, humid weather, are subject to rapid rusting and accumulation of fungi growth. Frequently inspect, clean and lubricate to prevent excessive deterioration.

e. Protect semitrailer from direct rainfall, if possible.

f. Dampness increases corrosive action. Inspect painted surfaces and electrical connections more frequently for damage.

23. Operation In Mud and Snow

a. XM1063 only: Reduce tire pressure to 45 psi (310.28 kPa), if practical.

b. After each operation, remove snow, ice and/or mud from underneath semitrailer and hoses, lines, tubes and electrical connections.

c. Refer to FM 21-305 for special instructions on driving hazards in snow.

d. Immediately after operation in mud or snow, thoroughly clean, inspect and lubricate semitrailer if tactical situation permits. Refer to Appendix I for proper lubrication instructions.

2-24. Operation In Dusty or Sandy Areas

a. For emergency operations in beach and desert sands, correct tire inflation for the XM1063 is 45 psi (310.28 kPa). For continued operation in sand, oversize balloon sand tires may be necessary. The tread should be plain rib and the tire of round cross section.

b. Inspect, clean and lubricate frequently when operating in dusty or sandy areas. Refer to Appendix I for proper lubrication instructions.

c. Make sure no dust or sand enters exposed mechanisms or lubrication fittings during inspections and repair operations. Cover exposed parts with tarpaulins or other suitable cover during disassembly and assembly.

d. When beginning operation in dusty or sandy areas, remove lubricants from exposed components (such as landing gear), if tactical situation permits. Grease and oil will cause dust and sand to accumulate and act as an abrasive, causing rapid wear.

2-25. Operation In Salt Water Areas

a. Wash salt deposits from all equipment with fresh water. Observe the precautions in operation under humid conditions.

b. Moist and salty areas can destroy rust preventative qualities of oils and greases. When equipment is active, exposed surfaces should be cleaned and lubricated daily. Refer to Appendix I for proper lubrication instructions.

c. When equipment is inactive, unpainted parts should be coated with lubricating oil (item 8, Appendix E). All covers and caps should be in place.

2-26. Fording

a. Instructions for fording operations for the towing vehicle also apply to the semitrailer.

b. Refer to TM 9-0238 for instructions on deep water fording and deep water fording kits.

c. Fording depth of the semitrailer is limited to the fording depth limit of the cargo or the towing vehicle, whichever is lower.

d. XM1063 only: Reduce tire pressure to 45 psi (310.28 kPa) to aid in amphibious landings.

e. After fording operations, perform the following services immediately (if tactical situation permits):


WARNING

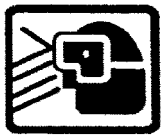


Dry cleaning solvent (P-D-680) is toxic and flammable. Avoid prolonged breathing of vapors. Avoid skin contact. Use only in a well-ventilated area. Keep away from open flame. Flash point of solvent is 138°F (50°C).

(1) Notify unit maintenance to remove wheel and rim assemblies and clean them thoroughly with dry cleaning solvent (item 3, Appendix E). Dry all working components of brakes and wheel bearings. Lubricate in accordance with Appendix I, Lubrication Instructions.

(2) Immersion in salt water greatly increases rusting and corrosion, especially on unpainted surfaces. Remove all traces of saltwater from the semitrailer. Apply lubricating oil (item 8, Appendix E). Notify unit maintenance that complete disassembly/assembly may be needed.

f. Notify unit maintenance to clean wheel bearings and hand pack with lubricant specified in Appendix I, Lubrication Instructions, after each submission.

2-27. Operation With Air Brake Failure (Caging Brakes)

In the event of a complete failure of the brake system, the following procedure makes it possible to move the semitrailer off the travel portion of the highway.

WARNING

This is an emergency procedure that is to be used only to move the semitrailer off the travel portion of the highway when there is a complete failure of the brake system. Normal operation with brakes caged could result in serious injury to personnel.

a. Remove internal hex pipe plug (1) from air chamber (2).

b. Remove nut (3) and washer (4). Remove release tool from the tool holder (7) on the air chamber.

c. Insert release tool (5) into the hole and turn one-quarter turn to seat release tool.

d. Install washer (4) and nut (3) on release tool (5) and tighten until 2-1/2 to 2-3/4 inches of release tool is exposed.

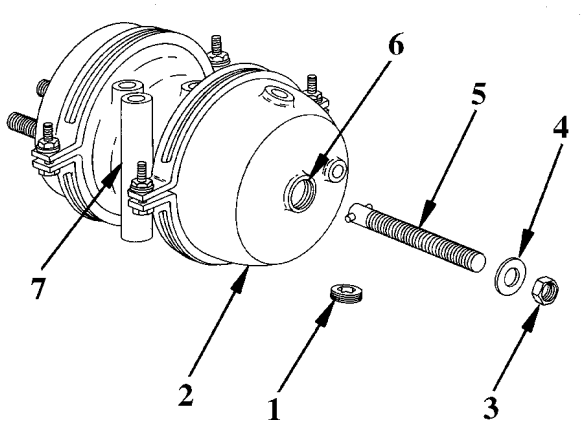

XM1063 Shown

e. Repeat steps a through d for the remaining air chambers.

f. With release tools in position, the semitrailer brake system is not operative. Use extreme caution and move semitrailer to side of road.

g. After reaching the side of the road, remove nut (3) and washer (4) from each release tool (5).

h. Remove release tools (5) from holes (6) in air chambers (2).

i. Insert each pipe plug (1) in holes (6) of air chambers and tighten.

j. Insert each release tool (5) in its tool holder (7) and secure with washer (4) and nuts (3).

CHAPTER 3
OPERATOR MAINTENANCE INSTRUCTIONS

Section I. OPERATOR/CREW TROUBLESHOOTING PROCEDURES

3-1 General

a. This section provides information for identifying and correcting malfunctions that may develop while operating the semitrailer.

b. The troubleshooting malfunction index (para. 3-3) lists common malfunctions that may occur and refers you to Table 3-1 Operator/Crew Troubleshooting, for the appropriate procedures.

c. If you are unsure of the location of an item mentioned in troubleshooting, refer to para. 3-3 or to the maintenance task in this manual where the item is replaced.

d. Before beginning troubleshooting, read and follow all safety instructions in the warning summary found in the front of this manual.

e. This section cannot list all the malfunctions that may occur, nor all the tests, inspections or corrective actions. If a malfunction is not listed or is not corrected by the corrective action listed, notify your supervisor.

f. When troubleshooting a malfunction:

(1) Locate the malfunction or malfunctions in the troubleshooting malfunction index (para. 3-3) that best describes the malfunction.

(2) Turn to the page in Table 3-1 where the troubleshooting procedures for that malfunction are described. Headings at the top of the page show how each troubleshooting procedure is organized; MALFUNCTION, TEST OR INSPECTION and CORRECTIVE ACTION. The malfunctions, tests or inspections and corrective actions are indented to line up with the appropriate heading.

(3) Perform each step in the order listed until the malfunction is corrected. DO NOT perform any maintenance task unless the troubleshooting procedure tells you to do so.

3-2. Explanation Of Columns

Explanation of the columns in Table 3-1 are as follows:

MALFUNCTION. A visual or operational indication that something is wrong with the semitrailer.

TEST OR INSPECTION. A procedure to isolate the problem in a component or system.

CORRECTIVE ACTION. A procedure to correct the problem.

3-3. Troubleshooting Malfunction Index

Table 3-1. Operator/Crew Troubleshooting

MALFUNCTION

TEST OR INSPECTION

CORRECTIVE ACTION

NOTE

For corrective actions or malfunctions not listed in Table 3-1, notify unit maintenance.

Wherever the word lubricate appears, refer to Appendix I for specific lubrication instructions.

Malfunctions, tests or inspections and corrective actions are listed/indented according to heading at the top left of each page.

ELECTRICAL SYSTEM

WARNING

Make sure all electrical power is disconnected before performing any maintenance on the electrical system. Serious injury or death may occur if safety precautions are not observed.

1. ALL LIGHTS FAIL TO LIGHT

Step 1. Check light switch on towing vehicle.

Place light switch on towing vehicle in proper mode of operation. If towing vehicle lamps light but semitrailer lights do not, proceed to step 2.

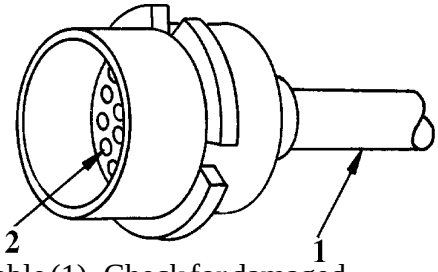

Step 2. Check to see that intervehicular cable (1) is properly plugged into receptacle.

If cable is not properly connected, reconnect cable.

If cable is properly connected, proceed to step 3.

Step 3. Inspect for dirty or corroded sockets (2) on intervehicular cable (1). Check for damaged pins.

If pins or socket are dirty or corroded, clean pins, socket and plug.

If pins are damaged, notify unit maintenance.

Step 4. Check for good ground connection at intervehicular cable receptacle. Have ground connection (1) tightened.

Step 5. Check lights again.

If they still do not light, notify unit maintenance.

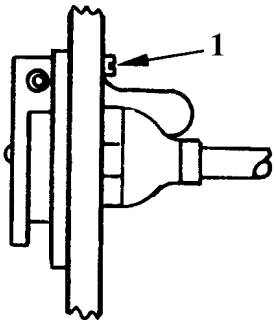

Table 3-1. Operator/Crew Troubleshooting (cont'd)

MALFUNCTION
TEST OR INSPECTION
CORRECTIVE ACTION

2. ONE OR MORE LAMPS WILL NOT LIGHT

NOTE

M129A4 Registration Number NX0RKB and Subsequent semitrailers are equipped with LED lighting systems. Lamps can not be replaced.

Step 1. Check for burned out or defective lamps.

If lamps are burned out or defective, notify unit maintenance.

If lamps are not burned out or defective, proceed to step 2.

Step 2. Check for broken lead wires or loose connections.

If connections are loose, tighten connections.

If lead wires are broken, notify unit maintenance.

Step 3. Check lens and light assembly for damage.

If damaged, notify unit maintenance.

If lens and light assembly are not damaged, proceed to step 4.

Step 4. Check for dirty or corroded connections.

Clean connections if dirty or corroded.

If above steps do not correct malfunction, notify unit maintenance.

3. ALL CHASSIS LIGHTS ARE ON AND CLEARANCE LIGHTS ARE OFF

NOTE

M129A4 Registration Number NX0RKB and Subsequent semitrailers are equipped with LED lighting systems. Lamps can not be replaced.

Step 1. Check for loose connections at resistor box (XM1063) or voltage converter box (M129A4).

If connections are loose, tighten connections.

If connections are tight, proceed to step 2.

Step 2. Check for dirty or corroded connectors.

Clean dirty or corroded connectors.

If connectors are not dirty, corroded or loose, and malfunction is not corrected, notify unit maintenance.

Table 3-1. Operator/Crew Troubleshooting (cont'd)

MALFUNCTION
TEST OR INSPECTION
CORRECTIVE ACTION

4. DIRECTIONAL SIGNALS INOPERATIVE

NOTE

M129A4 Registration Number NX0RKB and Subsequent semitrailers are equipped with LED lighting systems. Lamps can not be replaced.

Step 1. Check operation of turn signal light assembly.

If lamp is defective, notify unit maintenance.

If lamp or light is not defective, proceed to step 2.

Step 2. Check for loose connection.

If connections are loose, tighten connections.

If connections are not loose, proceed to step 3.

Step 3. Check for dirty or corroded connectors.

If connectors are dirty or corroded, clean them.

If the above steps do not correct malfunction, notify unit maintenance.

5. ALL 110-VOLT LAMPS FAIL TO LIGHT (M129A4 ONLY)

Step 1. Check power cable connection at rear of trailer.

Remove plug and re-insert fully (para. 2-8).

If connection is not loose, notify unit maintenance.

6. ALL 110-VOLT RECEPTACLES INOPERATIVE (M129A4 REGISTRATION NUMBERS NX0RKB AND SUBSEQUENT)

Step 1. Check for 110-volt power at the receptacles.

If no power is available at the 110-volt receptacles, check power cable connection at rear of trailer.

Remove plug and re-insert fully (para. 2-8).

If connection is not loose, notify unit maintenance.

BRAKE SYSTEM

7. BRAKES WILL NOT RELEASE

Step 1. Check that towing vehicle to semitrailer air supply is turned on.

If air is shut off, turn on air supply.

If air supply is on, proceed to step 2.

Table 3-1. Operator/Crew Troubleshooting (cont'd)

MALFUNCTION
TEST OR INSPECTION
CORRECTIVE ACTION

Step 2. Check air pressure of towing vehicle

If pressure is low, build up pressure to 90-100 psi (720.5 - 758.5 kPa).

If pressure is normal, proceed to step 3.

Step 3. Check connections of air lines to gladhands.

If air lines are not properly connected (EMERGENCY to EMERGENCY and SERVICE to SERVICE), connect air lines properly.

If air lines are properly connected, proceed to step 4.

Step 4. Check for dirty or leaking gladhand connections.

If gladhand is dirty, clean gladhand.

If gladhand is leaking, notify unit maintenance.

If gladhand is clean and not leaking, proceed to step 5.

Step 5. Inspect air hoses and connectors for leaks.

If hoses or connectors are leaking, notify unit maintenance.

If connectors are not leaking, proceed to step 6.

Step 6. Check air reservoirs for open drain cocks.

If a drain cock is open, close it.

. If all drain cocks are closed, notify unit maintenance.

8. NO BRAKES OR WEAK BRAKES

Step 1. Check to see if intervehicular air hoses (1) are properly connected.

If air hoses are not properly connected, connect them properly.

If air hoses are connected properly, proceed to step 2.

Step 2. Check for low air pressure.

If pressure is low, build up pressure.

If pressure is normal, notify unit maintenance.

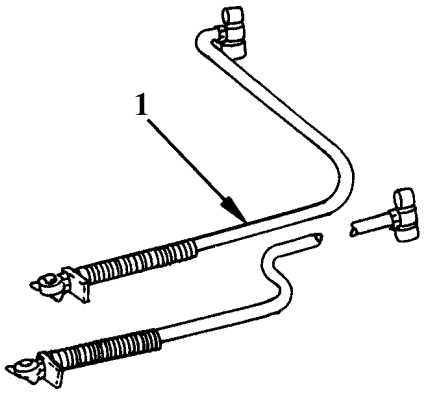

Table 3-1. Operator/Crew Troubleshooting (cont'd)

MALFUNCTION
TEST OR INSPECTION
CORRECTIVE ACTION

9. GRABBING BRAKES

WARNING

Wear goggles when opening air reservoir drain cocks. Failure to do so could cause serious eye injury from high pressure air.

NOTE

M129A4 has two drain cocks. XM1063 has three drain cocks. Make sure all drain cocks are opened/closed.

Check air system for moisture

Open all air reservoir (2) drain cocks (1) and allow any moisture to drain.

If reservoirs are dry and malfunction is not corrected, close drain cocks and notify unit maintenance.

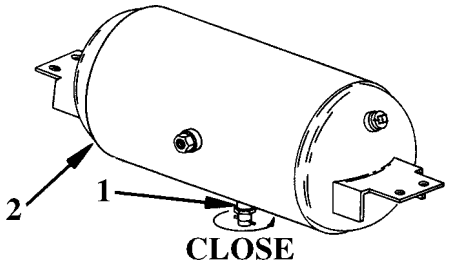

SUSPENSION SYSTEM

10. SEMITRAILER SAGS TO ONE SIDE

Step 1. Check tires to see if air pressure is low or uneven.
Inflate tires to correct pressure. M129A4 tire pressure is 70 psi (482.65 kPa).

XM1063: Highway ..... 70 psi (482.65 kPa)

Cross country, sand, mud, snow ..... 45 psi (310.28 kPa)

Step 2. Check to see if load in semitrailer is evenly distributed.

Distribute load evenly.

Step 3. Visually check for broken spring leaves.

If broken, notify unit maintenance.

WHEELS, HUB,S BEARINGS AND TIRES

11. AIR LEAKAGE FROM TIRES

Step 1. Inspect tires for punctures.

If tire is punctured, replace wheel and punctured tire with spare (para. 2-17).

Step 2. Check valve core for damage or looseness.

If damaged or loose, notify unit maintenance to tighten or replace valve core.

Table 3-1. Operator/Crew Troubleshooting (cont'd)

MALFUNCTION
TEST OR INSPECTION
CORRECTIVE ACTION

12. SEVERELY WORN, CHAFED, SCUFFED OR SHOW A SUDDEN INCREASE IN VISIBLE WEAR

Step 1. Check for proper tire pressure

Inflate tires to correct pressure. M129A4 tire pressure is 70 psi (482.65 kPa).

XM1063: Highway ..... 70 psi (482.65 kPa)

Cross country, sand, mud, snow ..... 45 psi (310.28 kPa)

Step 2. Check wheels for looseness.

If wheel is loose, tighten wheel stud nuts (para. 3-4).

If wheel is still loose, notify unit maintenance.

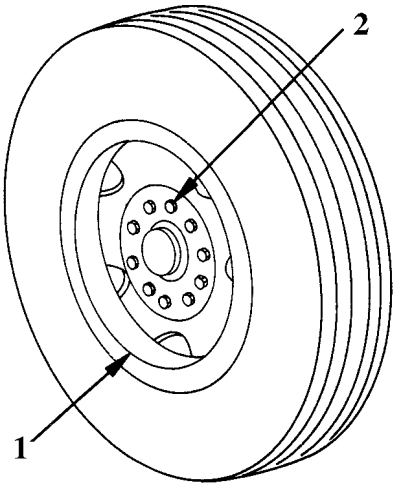

13. NOISY WHEELS

Inspect wheels (1) for looseness.

Tighten wheel stud nuts (2) (para. 3-4).

If wheels are still noisy, notify unit maintenance.

14. WOBBLY WHEELS

Inspect wheels (1) for looseness.

Tighten wheel stud nuts (2) (para. 3-4).

If wheels are still wobbly, notify unit maintenance.

LEVELING JACKS AND LANDING GEAR

15. ERRATIC OPERATION OR BINDING

Step 1. Check for adequate lubrication.

Lubricate in accordance with Appendix I, Lubrication Instructions.

Step 2. Visually check for apparent damage.

If damaged, notify unit maintenance.

Section II. OPERATOR/CREW MAINTENANCE PROCEDURES

3-4. Wheel and Tire

This task covers:

a. Removal

b. Installation

Initial Setup:

Tools/Test Equipment:
Wheel nut wrench
Jack

Materials/Supplies:

Equipment Conditions:
Brakes applied.

Personnel Required:
Two

WARNING

Tire is heavy. Two persons are required to remove/install tire.

a. Removal

1. Apply brakes to semitrailer. If semitrailer is attached to towing vehicle, wheels may be locked by disconnecting the emergency air connections.

NOTE

Outer cap nuts on right side (marked R) have right hand threads and those on the left (marked L) have left hand threads. Nuts must be turned in opposite direction to normal forward rotation of wheel to be loosened or removed.

2. Loosen ten outer wheel nuts (1), using wheel nut wrench (2)
3. Jack up semitrailer axle until wheel clears the ground.
4. Remove wheel nuts and wheel.

NOTE

Perform steps 5 through 7 to remove inner wheel.

5. Loosen ten inner wheel nuts (1), using wheel nut wrench (2).
6. Jack up semitrailer axle until wheel clears the ground.
7. Remove wheel nuts and wheel.

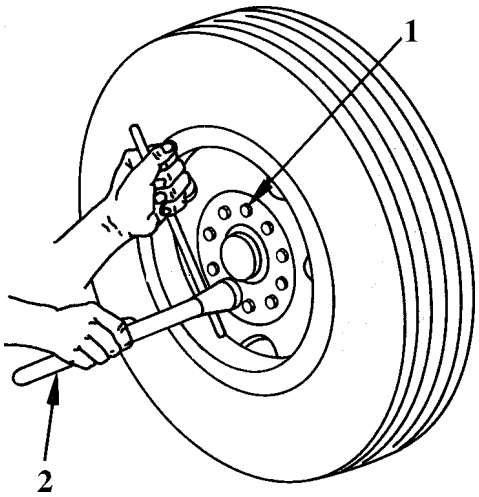

3-4. Wheel and Tire (cont'd)

b. Installation

WARNING

Tire is heavy. Two persons are required to remove/install tire.

NOTE

Before installing wheel and tire assembly, be sure that mounting surfaces of hub, ball seats and flat mounting surfaces of wheel are clean and free of foreign matter or excess paint.

Check to see that threads of studs are clean and not damaged.

Perform steps 1 and 2 to install inner wheel.

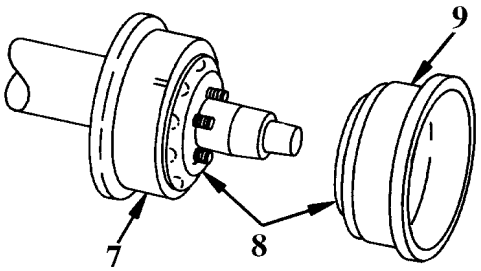

1. If removed, mount inner wheel (7) on hub with convex side (8) of wheel facing out. Install inner wheel cap nuts.
2. Tighten cap nuts securely in tightening sequence shown.
3. Mount outer wheel (9) on hub with convex side (8) of wheel facing in and against inner wheel.
4. Make certain valve stem for outer wheel is not aligned with valve stem of inner wheel.
5. Install outer wheel cap nuts. Tighten cap nuts securely in tightening sequence shown.
6. As soon as possible, have unit maintenance torque wheel stud nuts to 450-500 lb-ft (610.2-678.0 Nm).

TIGHTENING SEQUENCE

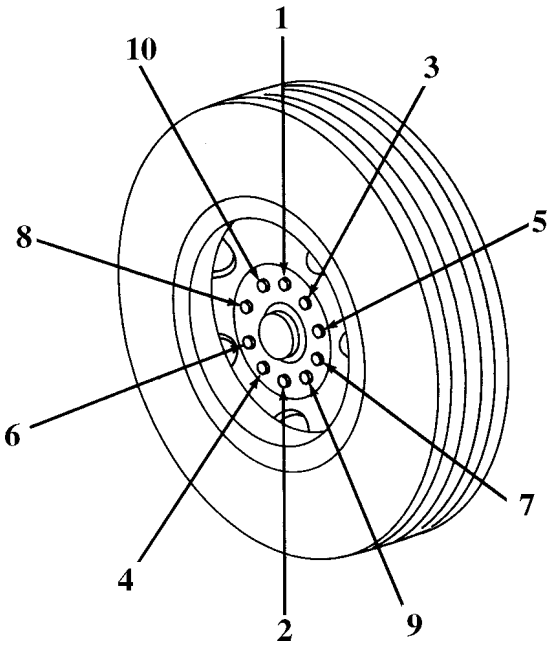

NOTE

Tire pressure for M129A4 is 70 psi (482.65 kPa).

7. Inflate tires to correct pressure.

XM1063:	Highway	70 psi (482.65 kPa)
	Cross country, sand, mud, snow	45 psi (310.28 kPa)

8. Lower semitrailer and remove jacking equipment.

CHAPTER 4
UNIT MAINTENANCE INSTRUCTIONS

Section I. REPAIR PARTS; TOOLS, SPECIAL TOOLS; TEST, MEASUREMENT AND DIAGNOSTIC EQUIPMENT (TMDE) AND SUPPORT EQUIPMENT

4-1. General

This chapter describes the Unit maintenance tasks to be performed on the XM1063 and M129A4 semitrailers.

4-2. Common Tools and Equipment

Common tools and equipment are issued to Unit maintenance personnel for maintaining the M129A4. Common tools and equipment should not be used for purposes other than those prescribed and should be properly stored when not in use. Refer to the Modified Table of Organization and Equipment (MTOE) for authorized common tools and equipment applicable to your unit.

4-3. Special Tools, TMDE and Support Equipment

Special tools and TMDE authorized for the XM1063 or M129A4 semitrailer are listed in Appendix B. Support equipment needed to operate the semitrailer is limited to the towing vehicle.

4-4. Repair Parts

Repair parts are listed and illustrated in Appendix F.

Section II. SERVICE UPON RECEIPT

4-5. General

When a new, used or reconditioned semitrailer is received, determine whether it has been properly prepared for service and is capable of performing its mission by performing the inspection instructions in para. 4-6 and the servicing instructions in para. 4-7.

4-6. Inspection Instructions

a. Refer to DD Form 1397 for procedures on unpacking the XM1063 or M129A4 semitrailer.

b. Remove all straps, plywood, tape, seals, and wrappings.

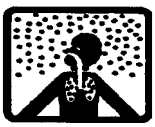


WARNING

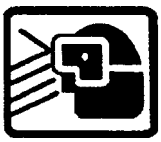


Dry cleaning solvent (P-D-680) is toxic and flammable. Avoid prolonged breathing of vapors. Avoid skin contact. Use only in a well-ventilated area. Keep away from open flame. Flash point of solvent is 380°F (50°C).

c. Remove rust preventive compound from coated exterior parts of the XM1063 or M129A4 semitrailer using dry cleaning solvent and rags (items 3 and 14, Appendix E).

d. Inspect semitrailer for damage incurred during shipment. Also check to see if the equipment has been modified.

e. Check the equipment against the packing list to make sure the shipment is complete. Report any discrepancies in accordance with instructions in DA PAM 738-750.

4-7. Servicing Instructions

a. Perform all Operator/Crew and Unit preventive maintenance checks and services (PMCS) listed in Tables 3-1 and 4-1. Schedule the quarterly and semiannual PMCS on DD Form 314 (Preventive Maintenance Schedule and Record).

b. Lubricate all lubrication points as described in Appendix I, regardless of interval.

c. Report any problems on DA Form 2407.

d. Perform a break-in road test of 25 miles (40.23 km) at a maximum speed of 30 mph (48.27 kph).

Section III. UNIT PREVENTIVE MAINTENANCE CHECKS and SERVICES (PMCS)

4-8. General

To ensure that the XM1063 or M129A4 semitrailer is ready for operation at all times, it must be inspected systematically so that defects can be detected and corrected before they result in serious damage or failure. Table 4-1 contains a tabulated listing of Preventive Maintenance Checks and Services (PMCS) to be performed by unit maintenance personnel.

4-9. Service Intervals

Perform the PMCS procedures listed in Table 4-1 at the following intervals:

- Perform Semiannual PMCS procedures twice each year.
- Perform Annual PMCS procedures once a year,
- Perform Mile PMCS as specified in Table 4-1.

4-10. Reporting Repairs

Report all defects and corrective actions on DA Form 2404. If a serious problem is found, report it to your supervisor immediately.

4-11. General PMCS Procedures

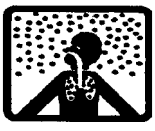


WARNING

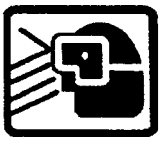


Dry cleaning solvent (P-D-680) is toxic and flammable. Avoid prolonged breathing of vapors. Avoid skin contact. Use only in a well-ventilated area. Keep away from open flame. Flash point of solvent is 380ºF (50ºC).

a. Keep equipment clean. Dirt, oil, and debris may cover up a serious problem. Clean as you work and as needed. Use dry cleaning solvent (item 3, Appendix E) on all metal surfaces. Use dishwashing soap (item 17, Appendix E) and water on rubber, plastic and painted surfaces.

4-11. General PMCS Procedures (cont'd)

b. While performing PMCS, inspect the following components:

Bolts, Nuts, and Screws. Make sure they are not loose, missing, bent or broken. Tighten any that are loose.

Welds. Inspect for gaps where parts are welded together. Report bad welds to your supervisor.

Electrical Wires or Connectors. Inspect for cracked or broken insulation, bare wires, and loose or broken connectors. Make repairs as required.

Hoses, Line, and Fittings. Inspect for wear, damage and leaks. Make sure clamps and fittings are tight. If a leak originates from a loose fitting or connector, tighten it. If a component is broken or worn out, correct the problem if authorized by the Maintenance Allocation Chart (MAC) (Appendix B). If not authorized, report it to your supervisor.

4-12. Specific PMCS Procedures

a. Unit PMCS procedures are listed in Table 4-1. Always perform PMCS in the order listed. Once your routine becomes a habit, anything that is not right can be spotted in a minute. If anything wrong is discovered through PMCS, perform the appropriate troubleshooting task listed in Section IV of this chapter. If any component or system is not serviceable or if the service given does not correct the problem, notify your supervisor.

b. The PMCS procedures listed in Table 4-1 are to performed at two intervals. Before performing PMCS, read all the checks required for the applicable interval and prepare the tools needed to make all checks. Have several clean rags (item 14, Appendix E) handy. Perform ALL inspections at the applicable intervals.

c. Explanations of the column headings in Table 4-1 are as follows:

Item No. The item number column of your PMCS table is to be used for reference. When completing DA Form 2404, include the item number for the check/service indicating a fault. Item numbers also appear in the order that you must do checks and services for the intervals listed.

Interval. This column of your PMCS table tells you when to do a certain check or service.

Item to be Inspected. This column of your PMCS table tells you what item is to be inspected and how to do the required checks and services. Carefully follow these instructions. If you do not have the tools, or if the procedure tells you to, have direct support maintenance do the work.

Table 4-1 Unit Preventive Maintenance Checks and Services

NOTE
Within the designated interval, perform checks in the order listed.

S - Semiannually **A-Annually** **MI - Miles**

Item No.	Interval S	Interval A	Interval MI	ITEM TO BE INSPECTED (Procedures: Check for and have repaired, filled or adjusted as needed).
				NOTE **Performd operator/crew prior to, or ikn conjunction with, unit PMCS if there is a delay between dailiy operation of the equipment and the unit PMCS OR regular operator is not assisting/participating.**
1				WHEELS AND TIRES
	•			a. Rotate and match tires semiannually in accordance with TM 9-2610-200-24.
	•			b. Check wheel nuts for tightness. Torque nuts to 450-500 lb-ft (610.2-678.0 Nm).
2				BRAKE AIR SYSTEM
	•			Check all air hoses for leaks, kinks, bends, cracks and missing mouting clamps.
			•	Lubricate S-cam and slack adjuster every 1000 miles or monthly, wichever comes first.
3				SPRINGS
	•			a. Check axle U-bolt nuts (2) for following torques: 300 lb-ft dry (406.8 Nm), 220 lb-ft lube (298.3 Nm).
	•			b. Notify Direct Support to check trunnion U-bolt nuts (1) for the following torques: 880 lb-ft dry (1193.3 Nm), 660 lb-ft lube (895 Nm).

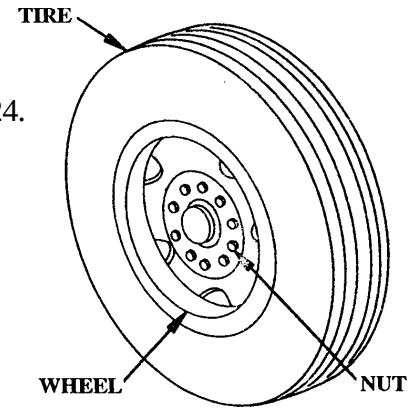

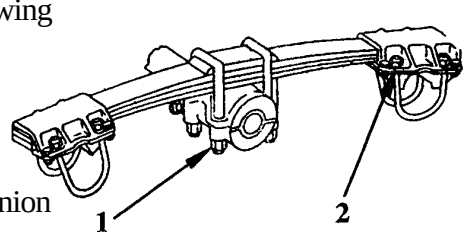

Table 4-1 Unit Preventive Maintenance Checks and Services

NOTE
Within the designated interval, perform checks in the order listed.

S - Semiannually **A-Annually** **MI - Miles**

Item No.	Interval S	Interval A	Interval MI	ITEM TO BE INSPECTED (Procedures: Check for and have repaired, filled or adjusted as needed).
4				BRAKES
	•			a. XM1063: Adjust brakes (para. 4-46).
	•			b. If possible, perform road test of semitrailer. Observe semitrailer for unusual or excessive noises that may indicate damage, looseness, defects and deficient lubrication. Make several stops and observe for side pull, noise, chatter or other unusual conditions.
	•			c. Inspect and repair brakes as required. **WARNING** **A hot brake can cauase serious burns. Use extreme caution before attempting to touch brake drum after use. Slowly move hand toward drum. If drum is overheated, radiated heat will be felt before actually touching drum.**
				d. Immediately after road test, cautiously fell brake drums and hubs for abnormal heat. An overheated wheel hub and brake drum indicates an improperly adjusted or defective brake or wheel bearing. An abnormally cool condition indicates an inoperative brake.
5				XM1063: RADIO FREQUENCY INTERFERENCE (RFI) SHIELDING
	•			Check that RFI shielding seals and contact areas are clean and providing good conductivity.
6				WHEEL BEARINGS
		•		Clean wheel bearings and repack in accordance with Appendix I, Lubrication Instructions and para. 4-48 (XM1063) or para. 4-49 (M129A4).
7				INTERVEHICULAR CABLE BOX
		•		Check for corrosion, moisture, damaged or missing parts.
8				KINGPIN
		•		Check wear of kingpin.

Section IV. UNIT TROUBLESHOOTING PROCEDURES

4-13. General

a. This section provides information for identifying and correcting malfunctions that may develop while operating or maintaining your XM1063 or M129A4 semitrailer.

b. The Troubleshooting Malfunction Index (para 4-15) lists common malfunctions that may occur and refers you to the proper page in Table 4-2, Unit Troubleshooting, for a troubleshooting procedure.

c. This section cannot list all malfunctions that may occur, nor all tests or inspections and corrective actions. Notify your supervisor if a malfunction is not listed or is not corrected by the corrective actions listed.

d. When troubleshooting a malfunction:

- Question the operator to obtain any information that might help determine the cause of a problem. Before continuing, make sure all applicable Operator/Crew troubleshooting was performed.
- Locate the symptom(s) in para. 4-15 that best describes the malfunction. If the appropriate symptom is not listed, notify your supervisor.
- Turn to the page in Table 4-2 where the troubleshooting procedures for the malfunction in question are described. Headings at the top of the page show how each troubleshooting procedure is organized: MALFUNCTION, TEST OR INSPECTION (in step number order) and CORRECTIVE ACTION. The malfunctions, tests or inspections, and corrective actions are indented to line up under the appropriate heading.
- Perform each step in order listed until the malfunction is corrected. DO NOT perform any maintenance task unless the troubleshooting procedure tells you to do so.

4-14. Explanation Of Columns.

Explanations of the headings in Table 4-2 are as follows:

MALFUNCTION. A visual or operational indication that something is wrong with the trailer.

TEST OR INSPECTION. A procedure to isolate a problem in a component or system.

CORRECTIVE ACTION. A procedure to correct the problem.

4-15. Troubleshooting Malfunction Index

Table 4-2. Unit Troubleshooting

MALFUNCTION
TEST OR INSPECTION
CORRECTIVE ACTION

ELECTRICAL SYSTEM

WARNING

Make sure all electrical power is disconnected before performing any maintenance on the electrical system. Serious injury or death may occur if safety precautions are not observed.

NOTE

The following procedures are applicable to the 12-volt and 24-volt electrical system.

1. ALL LIGHTS FAIL TO LIGHT

Step 1. Check light switch on towing vehicle.
Place light switch on towing vehicle in proper mode of operation. If towing vehicle lamps light but semitrailer lights do not, proceed to step 2.

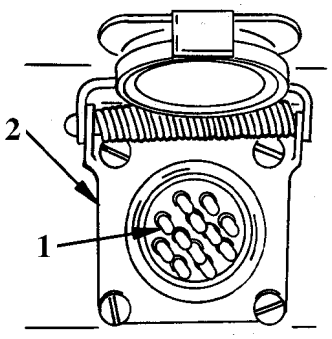

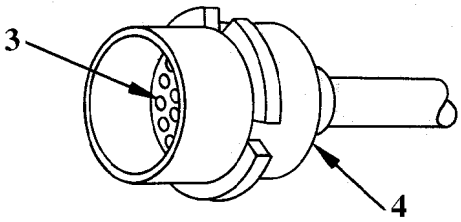

Step 2. Inspect for dirty or corroded terminals (1) in intervehicular cable receptacle (2) and sockets (3) in plug (4).

If terminals or sockets are dirty or corroded, clean them.

If terminals or sockets are clean, proceed to step 3.

Step 3. Check to see that intervehicular cable is properly plugged into 12-volt (1) or 24-volt (2) receptacle. In all steps, check for good ground connection.

If cable is not properly connected, reconnect cable.

If ground connection is loose, tighten ground connection.

If cable is properly connected and ground connection is tight, proceed to step 4.

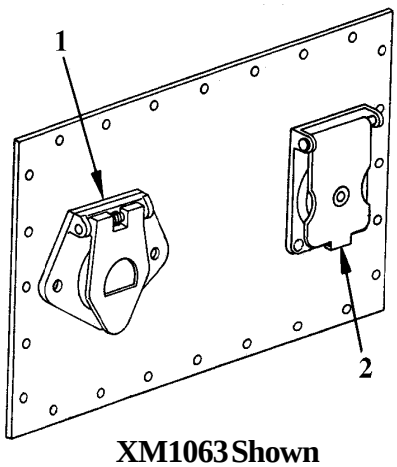

XM1063 Shown

Table 4-2. Unit Troubleshooting (cont'd)

MALFUNCTION
TEST OR INSPECTION
CORRECTIVE ACTION

Step 4. Check to see that current is flowing from towing vehicle, using a multimeter.

If proper voltage is obtained, proceed to step 5.

Step 5. Check wiring harness for short circuit.

Check cable for bare spots. Repair as necessary. Make a continuity test of all circuits, using a multimeter. (Refer to wiring diagrams, starting on page 4-58).

If wiring harness is good, proceed to step 6.

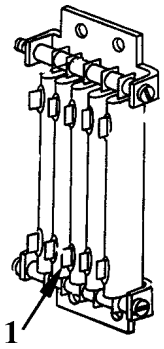

Step 6. Check light switch on towing vehicle.

If switch is defective, replace switch.

If switch is good, proceed to step 7 (XM1063) or step 9 (M129A4).

Step 7. Remove resistor box cover and check resistor contact points (1).

Clean contact points.

If points are clean, proceed to step 8.

Step 8. Check resistors for rated ohms marked on resistors, using multimeter (refer to resistor box wiring diagram, page 4-59).

Replace cracked, chipped or defective resistor (para. 4-23).

NOTE

M129A4 Registration Numbers NX0RKB and Subsequent LED lighting system voltage converter boxes no longer contain fuses/circuit breakers.

Step 9. Remove voltage converter box cover and check circuit breakers.

Replace defective circuit breakers.

Table 4-2. Unit Troubleshooting (cont'd)

MALFUNCTION
TEST OR INSPECTION
CORRECTIVE ACTION

2. ONE OR MORE LAMPS WILL NOT LIGHT

NOTE

Only clearance light lamp can be replaced.

M129A4 Registration Number NX0RKB and Subsequent semitrailer are equipped with LED lighting systems. Lamps can not be replaced.

Step 1. Check for defective lamp.

Replace defective lamp.

If no lamp is defective, proceed to step 2.

Step 2. Check for broken cable or loose connections.

If cable is broken, repair or replace cable.

If cable has loose connections, tighten connections.

If cable is not broken and connections are tight, proceed to step 3.

Step 3. Check intervehicular cable for dirty or corroded terminals.

If terminals or sockets are dirty or corroded, clean them.

If terminals are clean, proceed to step 4.

Step 4. Check for damaged or defective light.

Replace defective light.

3. DIM OR FLICKERING LIGHTS.

WARNING

Make sure power is disconnected to prevent injury to personnel.

Step 1. Check for defective cable.

If wiring is defective, repair or replace wiring.

If wiring is not defective, proceed to step 2.

Table 4-2. Unit Troubleshooting (cont'd)

MALFUNCTION
TEST OR INSPECTION
CORRECTIVE ACTION

Step 2. Check for loose or defective wiring components in resistor box (XM1063) or voltage converter box (M129A4).

If wiring is defective or loose, repair wire.

If components are loose or damaged, repair or replace components.

If malfunction is not corrected, proceed to step 3 (XM1063) or step 6 (M129A4).

Step 3. Check resistor contact points.

Clean resistor contact points.

If resistor contracts are clean, proceed to step 4.

Step 4. Check resistors for rated ohms marked on resistors, using multimeter (refer to wiring diagram page 4-58).

Replace cracked, chipped or defective resistor (para. 4-23).

If resistors are in good condition, proceed to step 5.

Step 5. Remove resistor box cover and check connections on circuit boards (1).

Make sure nut (2) and washer (3) are tight at each connection.

If nut and washer are loose, tighten them.

If connections are tight, proceed to step 7.

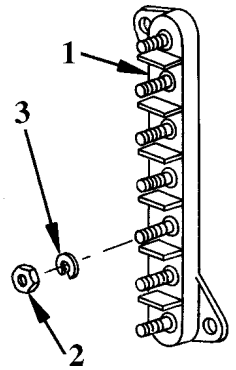

NOTE

M129A4 Registration Numbers NX0RKB and Subsequent LED lighting system voltage converter boxes no longer contain fuses/circuit breakers.

Step 6. Check voltage converter circuit breakers (M129A4).

Replace defective circuit breaker.

If circuit breakers are functioning properly, proceed to step 7.

NOTE

M129A4 Registration Number NX0RKB and Subsequent semitrailer are equipped with LED lighting systems. Lamps can not be replaced.

Step 7. Check for defective light assembly.

Replace defective light assembly.

Table 4-2. Unit Troubleshooting (cont'd)

MALFUNCTION
TEST OR INSPECTION
CORRECTIVE ACTION

4. DIRECTIONAL SIGNALS INOPERATIVE

NOTE

M129A4 Registration Number NX0RKB and Subsequent semitrailer are equipped with LED lighting systems. Lamps can not be replaced.

Step 1. Check for defective switch or flasher in towing vehicle.

Replace defective switch or flasher.

If switch and flasher are not defective, proceed to step 2.

Step 2. Check for defective light assembly.

Replace defective light assembly. (para. 4-40)

5. ALL 110-VOLT LAMPS FAIL TO LIGHT (M129A4 ONLY)

Step 1. Check to see if current is available from power source.

Check power source for failure.

Step 2. Check 110-volt circuit breaker box for tripped fuses.

Reset tripped circuit breaker.

6. ONE OR MORE 110-VOLT LAMPS (BUT NOT ALL) FAIL TO LIGHT (M129A4 ONLY)

Step 1. Check for defective lamp.

Replace defective lamp (para. 4-40).

WARNING

Make sure power is disconnected to prevent injury to personnel.

Step 2. Disconnect power source and check for dirty or corroded lamp socket or contacts.

Remove lamp and clean contacts.

Step 3. Check for broken wire or loose connections.

Tighten, repair or replace wire.

Step 4. Check for defective light assembly.

Replace defective light assembly (para. 4-40).

Table 4-2. Unit Troubleshooting (cont'd)

MALFUNCTION
TEST OR INSPECTION
CORRECTIVE ACTION

7. ONE OR MORE FLUORESCENT LAMPS FAIL TO LIGHT (M129A4 ONLY)

Step 1. Check for defective lamp.

Replace defective lamp (para. 4-40).

Step 2. Check for defective starter.

Replace defective starter (para. 4-40).

Step 3. Check for defective fixture.

Replace defective fixture (para. 4-40).

8. All 110-VOLT RECEPTACLES INOPERATIVE (M129A4 REGISTRATION NUMBERS NX0RKB AND SUBSEQUENT)

WARNING

Make sure power is disconnected to prevent injury to personnel.

Step 1. Disconnect power source and check for dirty or corroded sockets or contact pins.

Clean sockets or contact pins.

Step 2. Open circuit breaker and using a multimeter, check for defective circuit breaker(s).

Replace defective circuit breaker(s) (para. 4-27).

Step 3. Check for broken wire or loose connections.

Tighten, repair or replace wire.

9. ONE OR MORE 110-VOLT RECEPTACLES (BUT NOT ALL) FAIL TO WORK (M129A4 REGISTRATION NUMBERS NX0RKB AND SUBSEQUENT)

Step 1. Disconnect power source and check for dirty or corroded sockets or contact pins.

Clean sockets or contact pins.

Step 2. Check for defective 110-volt receptacles.

Replace defective 110-volt receptacle (para. 4-41).

Table 4-2. Unit Troubleshooting (cont'd)

MALFUNCTION
TEST OR INSPECTION
CORRECTIVE ACTION

BRAKE SYSTEM

10. BRAKES WILL NOT RELEASE

Step 1. Check for restrictions in air lines and hoses.

If air lines or hoses are restricted, replace as required.

If air lines and hoses are not restricted, proceed to step 2.

Step 2. Check to see if shutoff valves in towing vehicle are open.

If valves are closed, open shutoff valves.

If valves are open, proceed to step 3.

Step 3. Check to see if any drain cock is open.

If any drain cock is open, close drain cock.

If all drain cocks are closed, proceed to step 4.

Step 4. Check for intervehicular air hoses (1) for proper connection and damaged or missing preformed packing (2).

If hoses are improperly connected, connect them properly. If preformed packing is missing or damaged, replace packing.

If hoses are properly connected and preformed packing is good, proceed to step 5

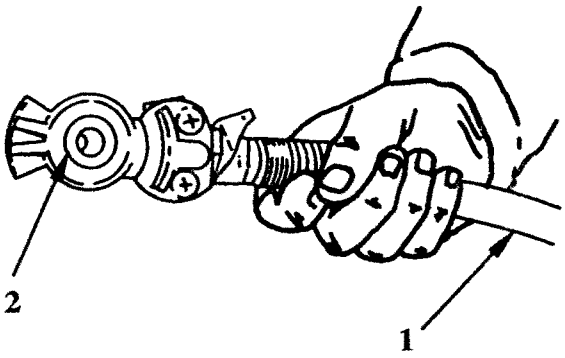

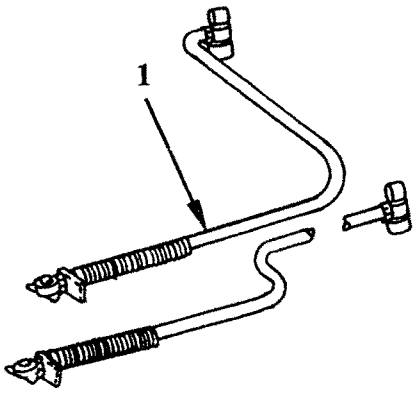

Table 4-2. Unit Troubleshooting (cont'd)

MALFUNCTION
TEST OR INSPECTION
CORRECTIVE ACTION

Step 5. Check relay valve and brake chamber.

Apply towing vehicle brakes and release. Relay valve should vent brake chamber air through exhaust port when brakes are released.

If air is not vented from brake chamber, replace relay valve.

If relay valve is not defective, but brake chamber is defective, replace brake chamber.

If relay valve and brake chamber are not defective, proceed to step 6.

Step 6. Check for weak or broken brake shoe return spring (1).

If return spring is defective, replace spring.

If return spring is not defective, proceed to step 7.

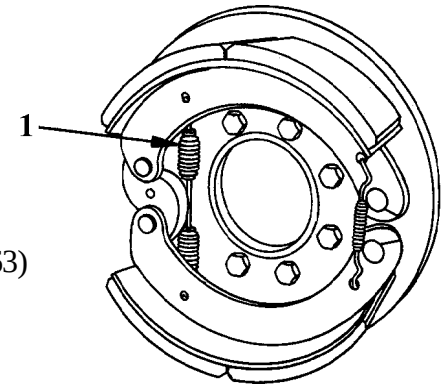

Step 7. Check for out-of-adjustment brakes.

Adjust brakes if out-of-adjustment (para. 4-50 (XM1063) or 4-51 (M129A4)).

11. NO BRAKES OR WEAK BRAKES

Step 1. Check to see if shutoff valves on towing vehicle are open.

If valves are closed, open shutoff valves.

If valves are open, proceed to step 2.

Step 2. Check intervehicular hoses for proper connection.

If hoses are not properly connected, connect hoses properly.

If hoses are properly connected, proceed to step 3.

Step 3. Check to see if any drain cock is open.

If any drain cock is open, close drain cock.

If all drain cocks are closed, proceed to step 4.

Step 4. Check for low air pressure.

Check air pressure gage on towing vehicle.

If air lines are restricted, remove restrictions.

Table 4-2. Unit Troubleshooting (cont'd)

MALFUNCTION
TEST OR INSPECTION
CORRECTIVE ACTION

Step 5. Test air lines for leakage.

If air lines leak, repair or replace air lines as needed.

If air pressure is normal and air lines are not restricted or leaking, proceed to step 6.

Step 6. Check for defective relay valve.

If valve is defective, replace relay valve.

If valve is not defective, proceed to step 7.

Step 7. Check for defective brake chamber.

If brake chamber is defective, replace brake chamber.

If brake chamber is not defective, proceed to step 8.

Step 8. Check for grease on brake lining.

Replace defective oil seal (para. 4-52 (XM1063) or 4-53 (M129A4)) and brake shoes (para. 4-55).

If grease is not present on brake lining, proceed to step 9.

Step 9. Check for worn brake lining.

If brake lining is worn, replace brake shoes (para. 4-55).

If brake lining is not worn, proceed to step 10.

Step 10. Check for brake adjustment.

Adjust brakes if out-of-adjustment (para. 4-50 (XM1063) or 4-51 (M129A4)).

12. SLOW BRAKE APPLICATION OR SLOW RELEASE

Step 1. Check for restrictions in air lines and hoses.

If air lines or hoses are restricted, replace as required.

If air lines and hoses are not restricted, proceed to step 2.

Step 2. Check relay valve operation.

If relay valve is defective, replace relay valve.

If relay valve is not defective, proceed to step 3.

Table 4-2. Unit Troubleshooting (cont'd)

MALFUNCTION
TEST OR INSPECTION
CORRECTIVE ACTION

Step 3. Check for weak or broken brake shoe return spring.

If return spring is defective, notify direct support maintenance.

If return spring is not defective, proceed to step 4.

Step 4. Check for defective brake chamber.

If brake chamber is defective, replace brake chamber (para. 4-46).

If brake chamber is not defective, proceed to step 5.

Step 5. Check for low pressure.

Perform leakage test. Repair or replace leaking air lines, hoses or connections.

13. GRABBING BRAKES

Step 1. Check brake adjustment.

If brakes are out-of-adjustment, adjust brakes (para. 4-50 (XM1063) or 4-51 (M129A4)).

If brake adjustment is correct, proceed to step 2.

Step 2. Check for grease on brake lining.

If grease is present, replace oil seals (para. 4-52 (XM1063) or 4-53 (M129A4)) and brake shoes (para. 4-55).

If grease is not present on brake lining, proceed to step 3.

Step 3. Check for loose or worn wheel bearings.

If wheel bearings are loose, adjust wheel bearings (para. 4-52 (XM1063), 4-53 (M129A4)).

If wheel bearings cannot be adjusted, replace wheel bearings.

If wheel bearings are not loose or worn, proceed to step 4.

Step 4. Check for cracked, scored or deformed brake drum.

If brake drum is cracked, scored or deformed, replace brake drum.

If brake drum does not need replacement, proceed to step 5.

Step 5. Check for loose or worn brake lining.

Replace brake shoes.

Table 4-2. Unit Troubleshooting (cont'd)

MALFUNCTION
TEST OR INSPECTION
CORRECTIVE ACTION

14. BRAKE DRUM RUNNING HOT

Step 1. Check brake adjustment.

If brakes are out-of-adjustment, adjust brakes (para. 4-50 (XM1063) or 4-51 (M129A4)).

If brake adjustment is correct, proceed to step 2.

Step 2. Check for weak or broken brake shoe return spring.

If return spring is weak or broken, replace return spring.

If return spring is not defective, proceed to step 3.

Step 3. Check for out-of-round brake.

If brake drum is out-of-round, replace brake drum.

15. UNEVEN BRAKING

Step 1. Check brake adjustment.

If brakes are out-of-adjustment, adjust brakes (para. 4-50 (XM1063) or 4-51 (M129A4)).

If brake adjustment is correct, proceed to step 2.

Step 2. Check for grease on brake lining.

If grease is present, replace oil seal (para. 4-52 (XM1063), 4-53 (M129A4)) and brake lining (para. 4-55).

16. NOISY BRAKES

Step 1. Check for loose rivets or loose lining.

If rivets or lining are loose, notify direct support maintenance.

If rivets or lining are not loose, proceed to step 2.

Step 2. Check for grit, rust or metal particles in brake drum.

If grit, rust or metal particles are present, clean brake drum and brake components.

If grit, rust and metal components are not present, proceed to step 3.

Table 4-2. Unit Troubleshooting (cont'd)

MALFUNCTION
TEST OR INSPECTION
CORRECTIVE ACTION

Step 3. Check for scored or deformed brake drum.

Replace scored or deformed brake drum (para. 4-52 (XM1063), 4-53 (M129A4)).

WHEELS AND HUBS

17. SEVERELY WORN, CHAFED, SCUFFED OR SHOW SUDDEN INCREASE IN VISIBLE WEAR

Step 1. Check for proper tire pressure.

Inflate tires to correct pressure. M129A4 tire pressure is 70 psi (482.65 kPa).

XM1063: Highway ..... 70 psi (482.65 kPa)

Cross country, sand, mud or snow ..... 45 psi (310.28 kPa)

If tire pressure is correct, proceed to step 2.

Step 2. Check for loose wheel.

If wheel is loose, tighten wheel nuts. Torque to 450-500 lb-ft (610.2-678 Nm).
If wheel is not loose, proceed to step 3.

If wheel bearings are not loose, proceed to step 4.

Step 3. Check for loose wheel bearings.

If wheel bearings are loose, adjust bearings (para. 4-52 (XM1063), 4-53 (M129A4)).

Step 4. Check for deformed wheel or rim.

If wheel is defective, replace wheel (para. 3-4).

Step 5. Check for deformed brake drum.

Replace brake drum (para. 4-52 (XM1063), 4-53 (M129A4)).

If wheel is not defective, proceed to step 5.

18. NOISY WHEELS

Step 1. Check adjustment of wheel bearings.

If wheel bearings are out-of-adjustment, adjust bearings (para. 4-52 (XM1063), 4-53 (M129A4)).

Table 4-2. Unit Troubleshooting (cont'd)

MALFUNCTION
TEST OR INSPECTION
CORRECTIVE ACTION

If wheel bearings are not out-of-adjustment, proceed to step 2.

Step 2. Check for worn wheel bearings.

If wheel bearings are worn or damaged, replace wheel bearings (para. 4-52 (XM1063), 4-53 (M129A4)).

If wheel bearings are not worn or damaged, proceed to step 3.

Step 3. Check for brake adjustment and worn brake lining.

If brakes are out-of-adjustment, adjust brakes (para. 4-50 (XM1063), 4-51 (M129A4)).

If brake linings are worn, replace brake shoes (para. 4-55).

19. WOBBLY WHEELS

Step 1. Check for worn wheel bearings.

If wheel bearings are worn or damaged, replace wheel bearings(para. 4-52 (XM1063), 4-53 (M129A4))

If wheel bearings are not worn or damaged, proceed to step 2.

Step 2. Check for loose wheel bearings.

If wheel bearings are too loose, adjust or replace wheel bearings (para. 4-52 (XM1063), 4-53 (M129A4)).

If wheel bearings are not loose, proceed to step 3.

Step 3. Check for bent or damaged wheel.

If wheel is bent or damaged, replace wheel (para. 3-4).

SUSPENSION

20. PULLING TO LEFT OR RIGHT

Step 1. Check for dragging brakes.

If brakes are dragging, adjust brakes.

If brakes are not dragging, proceed to step 2.

Table 4-2. Unit Troubleshooting (cont'd)

MALFUNCTION
TEST OR INSPECTION
CORRECTIVE ACTION

Step 2. Check wheel bearing adjustment.

If wheel bearings are out-of-adjustment, adjust bearings (para. 4-52 (XM1063), 4-53 (M129A4)).

21. IMPROPER SPRING ACTION

Step 1. Check for loose U-bolts.

If U-bolts are loose, notify direct suport maintenance.

If U-bolts are not loose, proceed to step 2.

Step 2. Check for broken or weak spring leaf.

If spring leaf is broken or weak, notify direct suport maintenance.

LANDING GEAR AND LEVELING JACK

22. DIFFICULTY IN LOWERING OR RAISING

Step 1. Check for dirt and grit on working parts.

If dirt or grit is present, clean all working parts and lubricate (refer to Appendix I).

If dirt and grit is not present, proceed to step 2.

Step 2. Check for misalignment or damage.

If landing gear or leveling jack are damaged or misaligned, replace leveling leg or landing gear.

DOORS

23. DIFFICULTY LOCKING OR UNLOCKING DOORS

Step 1. Check handle door lock, slide bolt assemblies and striker plates for rust and corrosion.

Clean and lubricate (refer to Appendix I).

If handle door lock, slide bolt assemblies and striker plates fare free of rust and corrosion, proceed to step 2.

Table 4-2. Unit Troubleshooting (cont'd)

MALFUNCTION
TEST OR INSPECTION
CORRECTIVE ACTION

Step 2. Check if door is hard to lock.

If door is hard to lock, add shim stock as required under handle door lock and/or slide bolt assembly guides.

If door is not hard to lock, proceed to step 3.

Step 3. Check for good weather tight seal when door is in closed and locked position.

Add shim stock as required under slide bolt assemblies.

Replace defective lock assembly (para. 4-68).

24. DOOR HINGES DO NOT OPERATE PROPERLY

Step 1. Check for rust on hinge pin.

Remove rust and lubricate.

Step 2. Check for cracked or broken hinge.

Replace defective hinge (para. 4-65).

25. RFI SHIELDING DOES NOT PROVIDE GOOD CONDUCTIVITY (XM1063 ONLY)

Check for dust, grime and dirt on RFI seals and contact areas.

Seals and contact areas must be kept clean at all times to provide good conductivity.

Section V. GENERAL MAINTENANCE INSTRUCTIONS

4-16. General

a. These general maintenance instructions contain general shop practices and specific methods you must be familiar with to properly maintain your XM1063 or M129A4 semitrailer. You should read and understand these practices and methods before performing any maintenance task.

b. Before beginning a task, find out how much repair, modification or replacement is needed to fix the equipment as described in this manual. Sometimes the reason for equipment failure can be seen right away and complete teardown is not necessary. Disassemble equipment only as far as necessary to repair or replace damaged or broken parts.

c. The following "Initial Setup" information applies to all procedures:

Resources are not listed unless they apply to the procedure.

Personnel are listed only if more than one technician is required to complete the task.

d. All tags and forms attached to equipment must be checked to learn the reason for removal from service. Modification work orders and technical bulletins must also be checked for equipment changes and updates.

e. In some cases, a part may be damaged by removal. If the part appears to be good and other parts behind it are not defective, leave it on and continue with the procedure. Here are a few simple rules:

- Do not remove dowel pins or studs unless loose, bent, broken or otherwise damaged.
- Do not remove bearings or bushings unless damaged. If you need to remove them to access parts, pull bearings and bushings out carefully.
- Replace all gaskets, seals, lockwashers, cotter pins, preformed packings and other locking hardware.

4-17. Work Safety

a. Observe all WARNINGs and CAUTIONs. Always use power tools carefully.

b. Protect yourself against injury. Wear protective gear, such as safety goggles or lenses, safety shoes, rub ber apron or gloves.

c. When lifting heavy parts, have someone help you. Make sure that lifting/jacking equipment is working properly, is suitable for the assigned task and is secure against slipping.

d. All maintenance should be performed with:

- Trailer parking brake engaged.
- Tow vehicle in neutral with parking brake engaged, if attached.
- Tow vehicle engine stopped, if attached.

4-18. Cleaning Instructions

WARNING

Improper cleaning methods and the use of unauthorized cleaning liquids or solvents can injure personnel and damage equipment. To prevent this, refer to TM 9-247 for further instructions.

a. General

Cleaning instructions will be the same for a majority of the parts and components that make up the XM1063 or M129A4 semitrailer. The following should apply to all cleaning, inspection, repair and assembly operations:

- Clean all parts before inspection, after repair and before assembly.
- Keep hands free of grease, which can collect dust, dirt and grit.
- After cleaning, cover or wrap all parts to protect them from dust and dirt. Parts that are subject to rust should be lightly oiled.

b. Steam Cleaning

1. Before steam cleaning exterior of XM1063 or M129A4 semitrailer, protect all electrical equipment that could be damaged by steam or moisture.

2. Place disassembled parts in a suitable container to steam-clean. Parts that are subject to rust should be dried and lightly oiled after cleaning.

4-18. Casting Instructions (cont'd)

c. Castings, Forgings and Machined Metal Parts


WARNING

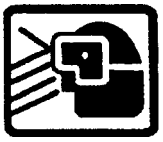


Dry cleaning solvent (P-D-680) is stoxic and flammable. Avoid prolonged breathing of vapors. Avoid skin contact. Use only in a well-ventilated area. Keep away from open flame. Flash point of solvent is 138° (50° C).

1. Clean inner and outer surfaces with dry cleaning solvent (item 3, Appendix E).
2. Remove grease and accumulaterd deposits with a stiff-bristled brush.

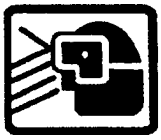

WARNING

Compressed air used for cleaning or drying purposes, or for clearing restrictions, should never exceed 30 psi (207 kPa). Wear protective clothing (goggles/shield, gloves, etc.) and use caution to avoid injury to personnel.

3. Clear out all threaded holes with compressed air to remove dirt and cleaning fluids.

CAUTION

Do not wash oil seals, electrical cables, and flexible hoses with dry cleaning solvent or mineral spirits. Serious damage or destruction of material would result.

d. Oil Seals, Electrical Cables and Flexible Hoses

Wash electrical cables and flexible hoses with solution of water and dishwashing soap (item 17, Appendix E) and wipe dry.

e. Bearings

Clean bearings in accordance with TM 9-214.

4-19. Inspection Instructions

NOTE

All damaged areas should be marked for repair or replacement

a. All components and parts must be checked carefully to determine if they are serviceable for reuse, can be repaired or must be scrapped.

4-19. Inspection Instructions (cont'd)

b. Inspect drilled and tapped (threaded) holes for the following:

- In or around holes- wear, distortion, cracks and any other damage.
- Threaded areas- wear, distortion (stretching) and evidence of cross-threading.

c. Inspect metal lines, flexible lines (hoses) and metal fittings for the following:

- Metal lines- sharp kinks, cracks, bad bends and dents.
- Flexible lines- fraying, evidence of leakage and loose metal fittings or connectors.
- Metal fittings and connectors- thread damage and worn or rounded hex heads.

d. Inspect castings, forgings and machined metal parts for the following:

- Machined surfaces- nicks, burrs, raised metal, wear and other damage.
- Inner and outer surfaces- breaks and cracks.

e. Inspect air lines, fittings and connectors for leaks by coating fittings and connectors with solution of dishwashing soap (item 17, Appendix E) and water. No leakage is permissible.

f. Inspect bearings in accordance with TM 9-214.

4-20. Repair Instructions

a. Any repair procedure peculiar to a specific part or component is covered in the section or paragraph relating to that item. After repair, clean all parts thoroughly to prevent dirt, metal chips or other foreign material from entering any working parts.

b. Repair casting, forgings and machined parts using the following instructions:

- Refer to TM 9-237 for instructions on repairing minor cracked castings or forgings.

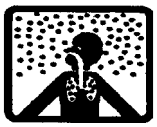


WARNING

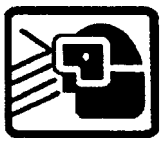


Dry cleaning solvent (P-D-680) is toxic and flammable. Avoid prolonged breathing of vapors. Avoid skin contact. Use only in well-ventilated area. Keep away from open flame. Flash point of solvent is 138ºF (50ºC).

- Repair minor damage to machine surfaces with a fine mill file or abrasive cloth dipped in dry cleaning solvent (item 3, Appendix E).
- Replace any deeply nicked machined surface that could affect the assembled operation. Repair minor damage to threaded capscrew holes with thread tap of same size, to prevent cutting oversize.

c. Refer to para. 4-49 for maintenance on metal lines, flexible lines (hoses), and metal fittings.

4-21. Tagging Hoses and Tubes

a. As soon as first hose or tube is disconnected, write the number "1" on two tags. Secure one tag to the hose or tube and the other tag to the nipple or fitting. After disconnecting the second hose or tube, write the number "2" on two tags. Secure one tag to the hose or tube and the other tag to the nipple or fitting. Do the same for all hoses and tubes.

b. Note which numbers you used, in pencil, on the art in this manual. This will help you retag properly when you remove tags from some parts to perform cleaning and maintenance work.

c. Remove all tags when finished.

Section VI. ELECTRICAL SYSTEM MAINTENANCE PROCEDURES

4-22. General

WARNING

Make sure all electrical power is disconnected before performing any maintenance on the electrical system. Serious injury or death may result if proper precautions are not taken.

a. The M129A4 and XM1063 semitrailers are equipped with two intervehicular cable receptacles, located in the voltage convertor box and cover assembly (M129A4) and resistor box and cover assembly (XM1063) at lower left corner of front of semitrailer.

b. The 12-pin, 24-volt receptacle (2) is located to the left of the 7-pin, 12-volt receptacle (1)

c. A system of resistors (XM1063) or circuit breakers (M129A4) make it possible to use a towing vehicle with either a 12-volt or 24-volt electrical system.

d. Refer to semitrailer wiring diagrams before connecting any disconnected wires (pages 4-58 through 4-66).

.

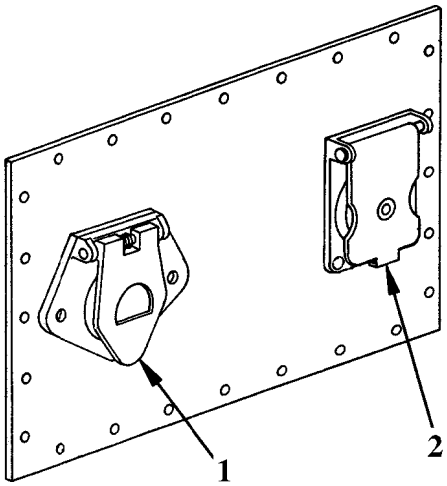

XM1063 Shown

4-23. Resistor Assembly (XM1063 Only)

This task covers:

a. Removal
b. Inspection
c. Installation

Initial Setup:

Tools/Test Equipment:
Multimeter
General mechanic's tool kit (item 01, Appendix B)

Equipment Conditions:
Power source disconnected.

Materials/Supplies:

WARNING

Make sure all electrical power is disconnected before performing any maintenance on the electrical system. Serious injury or death may result if proper precautions are not taken.

a. Removal

1. Make sure power source is disconnected and remove 24 screws (1) and washers (2) and cover assembly (3).
2. Remove two nuts (4) and screws (5) securing resistors (6) and (7).

NOTE

The two 6-ohm resistors (6) can be removed separately. The three 4.5 ohm resistors (7) are interconnected by jump wires. Remove as a unit.

4. Tag and disconnect wires. Remove resistors..

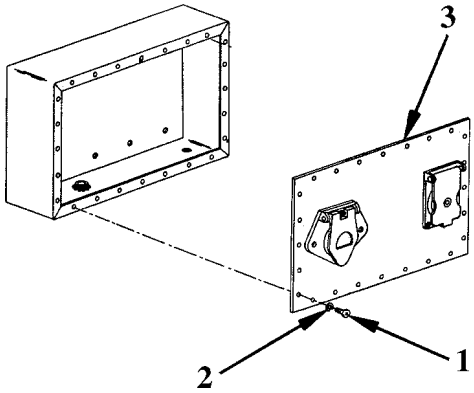

b. Inspection

1. Check resistor contact points (8) for cleanliness. Clean as required.
2. Using multimeter, check resistors for rated ohms marked on front of resistor (refer to wiring diagrams, pages 4-58 and 4-59).
3. Replace cracked, chipped or defective resistor.

c. Installation

1. Position 6-ohm resistor (6), connect wires and secure with screws (5) and nuts (4).
2. Position 4.5-ohm resistors (7) and solder all jumper wire (9) connections.

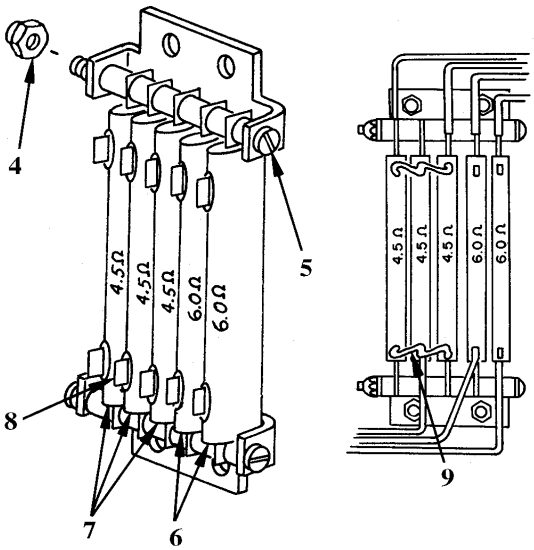

4-23. Resistor Assembly (XM1063 Only) (cont'd)

3. Connect all disconnected wires and secure with screws (5) and nuts (4).
4. Using multimeter, check resistors for rated ohms marked on front of resistor (refer to wiring diagrams, pages 4-58 and 4-59).
5. Position cover assembly (3) on resistor box and secure with 24 screws (1) and nuts (2).

Follow-on maintenance: None

4-24. Resistor Box (XM1063 Only)

This task covers:

a. Removal

b. Installation

Initial Setup:

Tools/Test Equipment:
General mechanic's tool kit (item 01, Appendix B)

Equipment Conditions:
Power source disconnected.

Materials/Supplies:

WARNING

Make sure all electrical power is disconnected before performing any maintenance on the electrical system. Serious injury or death may result if proper precautions are not taken.

1. Remove 24 screws (5), washers (6) and cover assembly (4).
2. Remove ten screws (3), washers (2) andresistor box (1).

b. Installation

1. Position resistor box (1) and secure with 10 screws (3) and washers (2).
2. Position cover assembly (4) and secure with 24 screws (5) and washers (6).

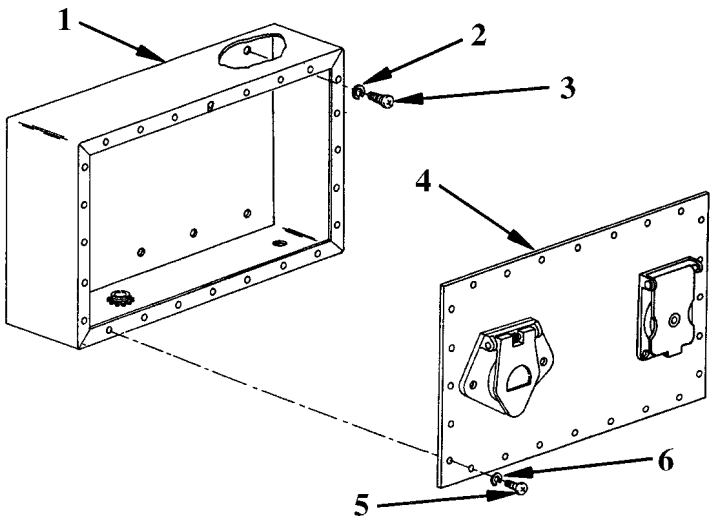

Follow-on maintenance: None

4-25. Voltage Converter Box (M129A4 Except LED Lighting System)

This task covers:

a. Removal
b. Cleaning
c. Inspection
d. Repair
e. Installation

Initial Setup:

Tools/Test Equipment:
General mechanic's tool kit (item 01, Appendix B)

Equipment Conditions:
Power source disconnected.

Materials/Supplies:
Cleaning compound (item 19, Appendix E)
Rags (item 14, Appendix E)
Gasket (Appendix G)
Lock washer
Lock nut

WARNING

Make sure all electrical power is disconnected before performing any maintenance on the electrical system. Serious injury or death may result if proper precautions are not taken.

a. Removal

1. Tag and disconnect wiring harness (1).
2. Remove four screws (2), lockwashers (3) and converter box (4).

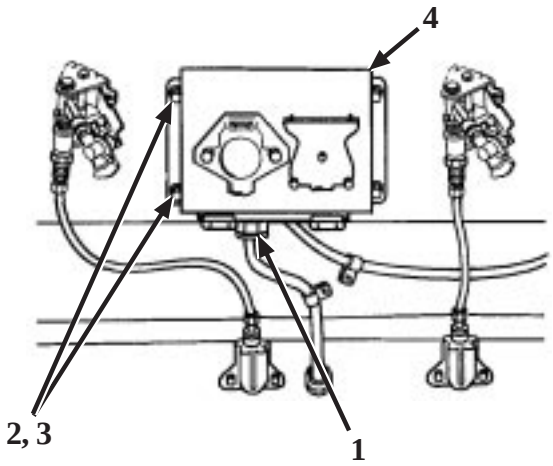

b. Cleaning

1. Wipe parts clean with rag (item 14, Appendix E).

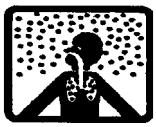


WARNING

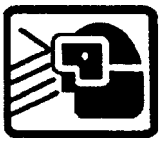


Cleaning compound is toxic and flammable. Avoid prolonged breathing of vapors. Avoid skin contact. Use only in a well-ventilated area. Keep away from open flame. Flash point of compound is 120° F (49°C).

2. Clean terminals and box cover with cleaning compound (Item 19, Appendix E).

4-25. Voltage Converter Box (M129A4 Except LED Lighting System) (cont'd)

c. Inspection

1. Check wiring for damaged or worn insulation.
2. Inspect box assembly body for corrosion, cracks, dents, warpage, marred paint or missing or damaged gasket. Repair or replace defective parts.

d. Repair

NOTE

Repair is limited to replacement of connectors, circuit breakers and cover gasket. All circuit breakers are removed in same manner. One is shown.

1. Connectors
   (a) Tag and disconnect wires (5).
   (b) Remove four screws (6), lockwashers (7), nuts (8) securing connector (9).
   (c) Remove connector (9).
   (d) Remove two screws (10), lockwashers (11), nuts (12) and connector (13).
   (e) Replace defective parts.
   (f) Install connector (13), two screws (10), lockwashers (11) and nuts (12).
   (g) Install connector (9).
   (h) Install cover (18), four screws (6), lockwashers (7) and nuts (8).
   (i) Connect wires (5).
2. Circuit breakers
   (a) Pull out circuit breaker (14).
   (b) Remove lock nut (15) and lock washer (16). Tag and disconnect wires (17). Discard lock nut and lock washer.
   (c) Replace defective parts.
   (d) Connect wires (17). Install new lock nut (15) and lock washer (16).
   (e) Install circuit breaker (14).
3. Cover gasket
   (a) Remove gasket (18).
   (b) Make sure surface area of cover is clean.
   (c) Remove paper backing from new gasket (18) and install on cover.

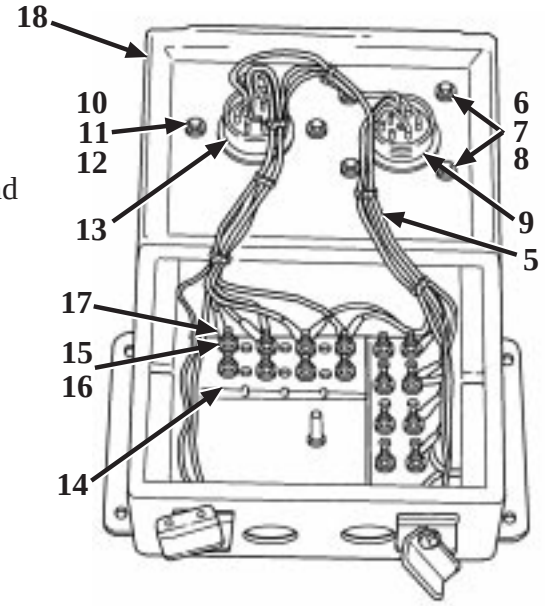

4-25. Voltage Converter Box (M129A4 Except LED Lighting System) (cont'd)

e. Installation

1. Position voltage converter box (4) and secure with four lockwashers (3) and screws (2).
2. Connect wiring harness (1).

Follow on Maintenance: None

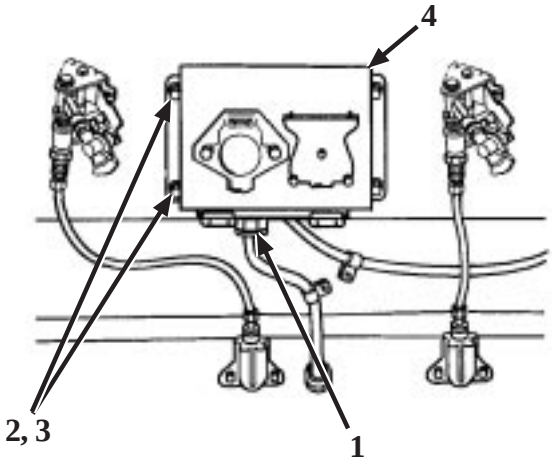

4-26. Voltage Converter Box (Including M129A4 with LED Lighting System)

This task covers:

a. Removal
b. Cleaning
c. Inspection
d. Repair
e. Installation

Initial Setup:

Tools/Test Equipment:
General mechanic's tool kit (item 01, Appendix B)

Equipment Conditions:
Power source disconnected.

Materials/Supplies:
Cleaning compound (item 19, Appendix E)
Rags (item 14, Appendix E)
Gasket (Appendix G)
Lock washers (11)
Selflocking nut

WARNING

Make sure all electrical power is disconnected before performing any maintenance on the electrical system. Serious injury or death may result if proper precautions are not taken.

4-26. Voltage Converter Box (Including M129A4 with LED Lighting System) (cont'd)

a. Removal

1. Disconnect harness nut (1).
2. Remove four screws (2), lockwashers (3) and converter box (4). Discard lockwashers.

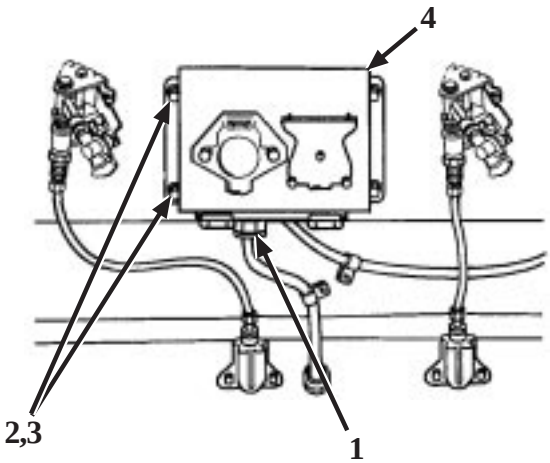

b. Cleaning

1. Wipe parts clean with rag (Item 14, Appendix E).


WARNING

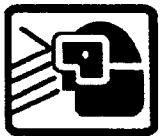


Cleaning compound is toxic and flammable. Avoid prolonged breathing of vapors. Avoid skin contact. Use only in a well-ventilated area. Keep away from open flame. Flash point of compound is 120° F (49°C).

2. Clean terminals and box cover with cleaning compound (item 19, Appendix E).

c. Inspection

1. Check wiring for exposed wiring, damage, or worn insulation.
2. Inspect box assembly body for corrosion, cracks, dents, warpage, marred paint or missing or damaged gasket. Repair or replace defective parts.

4-26. Voltage Converter Box (Including M129A4 with LED Lighting System) (cont'd)

d. Repair

NOTE

Repair is limited to replacement of circuit board, connectors, adapter, grommet, cover gasket, and clamp.

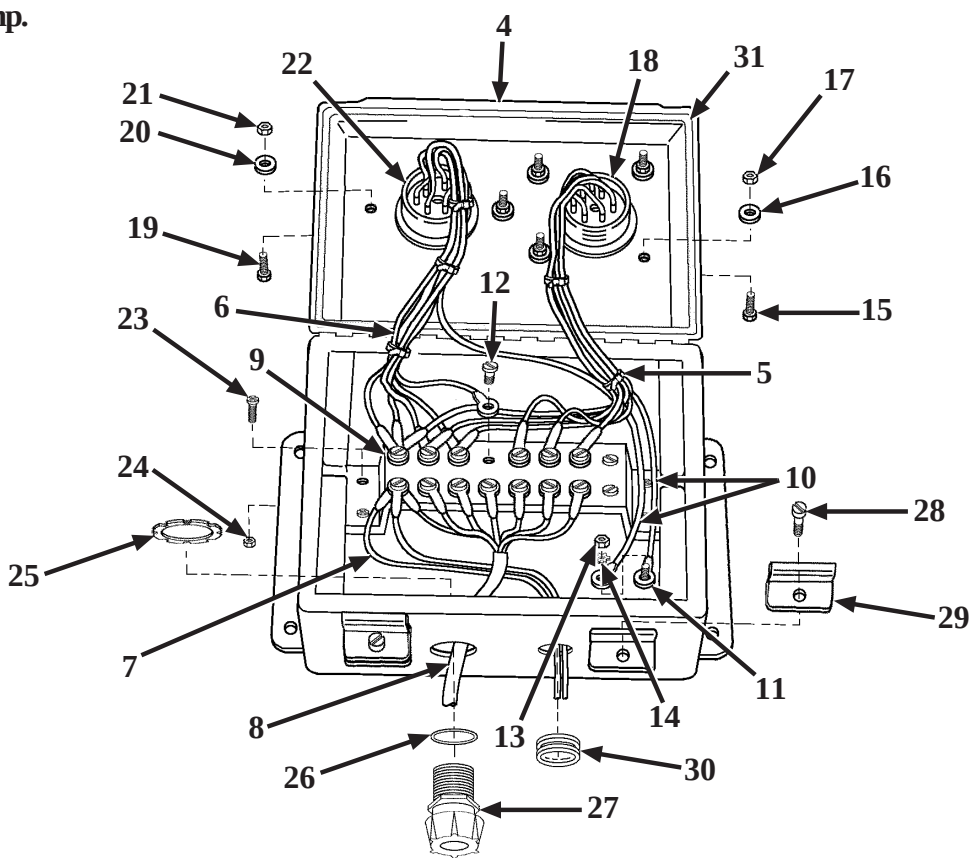

(a) Tag wires (5),(6),(7), and (8) at terminal board (9) and ground wires (10) at ground stud (11).

(b) Remove fourteen screws (12) and wires (5),(6),(7), and (8) from terminal board (9).

(c) Remove selflocking nut (13) and lock washer (14) from ground stud (11).

(d) Remove two ground wires (10) from ground stud (11).

(e) Remove four screws (15), lockwashers (16), and nuts (17) securing connector (18).

(f) Remove connector (18) from converter box (4).

(g) Remove two bolts (19), lockwashers (20), and nuts (21) securing connector (22), discard lockwashers.

(h) Remove connector (22) from converter box (4).

(i) If damaged, remove four screws (23) and selflocking nuts (24) securing terminal board (9) to converter box (4). Remove terminal board. Discard selflocking nuts.

(j) If damaged, remove nut (25) and o-ring (26) securing coupling (27) to converter box (4). Discard nut, o-ring, and coupling.

4-26. Voltage Converter Box (Including M129A4 with LED Lighting System) (cont'd)

(k) If damaged, remove grommet (30) from converter box (4). Discard screw and clamp.

(l) If damaged, remove screw (28) securing clamp (29) to converter box (4). Discard grommet.

(m) If damaged, remove gasket (31) from converter box (4). Discard gasket.

(n) Replace deffective converter box (4).

(o) If gasket (31) was removed, make sure surface area of converter box cover (4) is clean.

(p) Remove paper backing from new gasket (31) and install on converter box cover (4).

(q) If grommet (31) was removed, install new grommet in converter box (4).

(r) If clamp (29) was removed, install new clamp (29) and screw (28) on converter box (4).

(s) If coupling (27) was removed, install new coupling (27) in converter box (4) using new o-ring (26) and nut (25).

(t) If terminal board (9) was removed, position new terminal board (9) in converter box (4) and secure with four screws (23) and new selflocking nuts (24).

(u) Install connector (22) in converter box (4). Secure with two bolts (19), nuts (21), and new lockwashers (20).

(v) Install connector (18) in converter box (4). Secure with four screws (15), nuts (17), and new lockwashers (16).

(w) Install wires (8) through coupling (27).

(x) Install wires (7) through grommet (31).

NOTE

Refer to wiring diagram on page 4-66 and previously tagged wires prior to installing wires to terminal board and grown stud.

(y) Install two ground wires (10) on ground stud (11). Secure with new lockwasher (14) and selflocking nut (13).

(z) Position wires (5),(6),(7), and (8) on terminal board (9) and secure with fourteen screws (12).

e. Installation

1. Position voltage converter box (4) and secure with four new lockwashers (3) and screws (2).
2. Connect wiring nut (1).

Follow on Maintenance: None

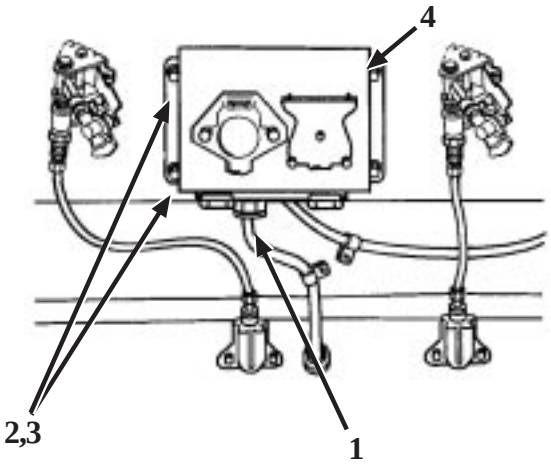

4-27. 110-Volt Circuit Breaker Box (M129A4 Only)

This task covers:

a. Removal
b. Cleaning and inspection
c. Repair
d. Installation

Initial Setup:

Tools/Test Equipment:
General mechanic's tool kit (item 01, Appendix B)

Equipment Conditions:
Power source disconnected.

Materials/Supplies:
Rags (item 14, Appendix E)

WARNING

Make sure all electrical power is disconnected before performing any maintenance on the electrical system. Serious injury or death may result if proper precautions are not taken.

a. Removal

1. Remove screw (1) and cover (2).

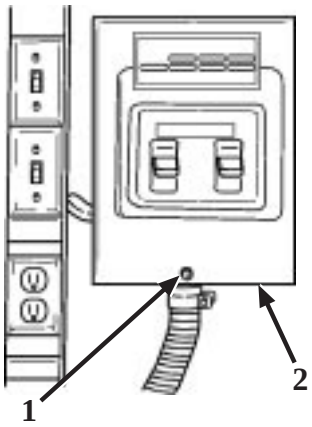

4-27. 110-Volt Circuit Breaker Box (M129A4 Only) (cont'd).

2. Remove large and small bondnuts (3 & 4).
3. Remove four blind rivets (5) and pull off circuit breaker box (6).

b. Cleaning and Inspection

1. Wipe parts clean with clean rag (item 14, Appendix E).
2. Inspect for corrosion, frayed wire or other damage. Replace damaged or defective parts.
3. Inspect for corroded or missing contacts, cracked housing. Replace damaged or defective parts.

c. Repair

NOTE

All circuit breakers are removed/installed in the same manner. One is shown.

Pull out circuit breaker (7). Tag and disconnect wire (8).

d. Installation

1. Connect wire (8). Install circuit breaker (7).
2. Position circuit breaker box (6) and secure with four blind rivets (5).
3. Install large and small bondnuts (3 & 4).
4. Position cover (2) and secure with screw (1).

Follow on Maintenance: None

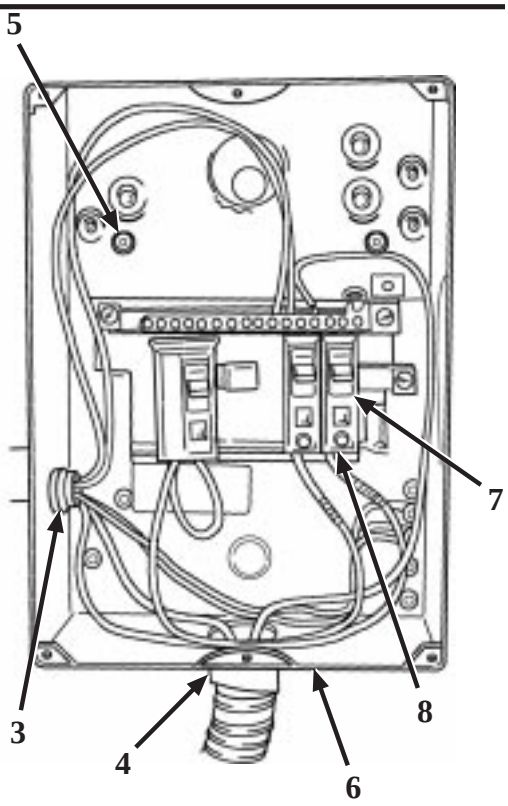

4-1

4-28. Intervehicular Cable Receptacle, 24-Volt

This task covers:

a. Removal
b. Cleaning
c. Inspection
d. Installation

Initial Setup:

Tools/Test Equipment:
Multimeter
General mechanic's tool kit (item 01, Appendix B)

Equipment Conditions:
Power source disconnected.

Materials/Supplies:
Cleaning compound (item 19, Appendix E)
Rags (item 14, Appendix E)

WARNING

Make sure all electrical power is disconnected before performing any maintenance on the electrical system. Serious injury or death may result if proper precautions are not taken.

a. Removal

1. Make sure power source is disconnected.
2. Remove four nuts (4), washers (3), ground wire (9) and screws (2) securing receptacle (5) and cover (1) to resistor box cover assembly.
3. Remove cover (1) and receptacle (5).

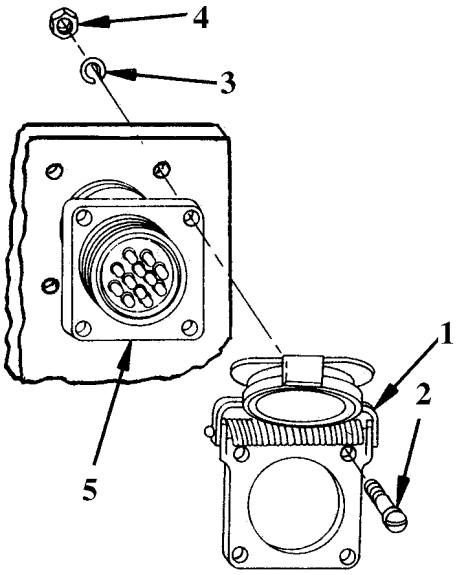

4. Remove nut (6) from rear of receptacle (5) and slide nut back over wires (7).

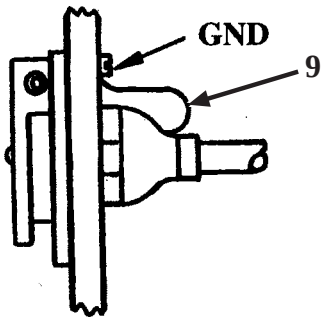

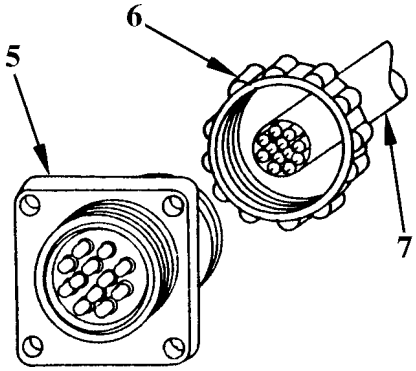

4-28. Intervehicular Cable Receptacle, 24-Volt (cont'd)

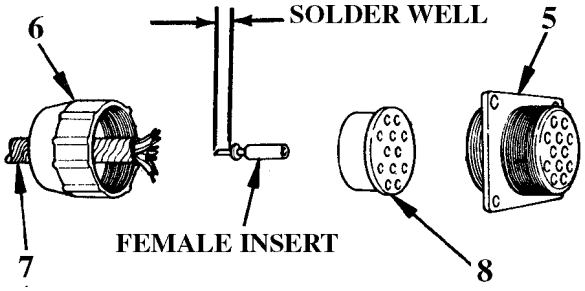

5. Mark and unsolder wires at rear of receptacle (5).
6. Remove rubber bushing (8) from receptacle (5) and slide bushing back over wires (7).

b. Cleaning

Cleaning compound is toxic and flammable. Avoid prolonged breathing of vapors. Avoid skin contact. Use only in a well-ventilated area. Keep away from open flame. Flash point of compound is 120° F (49° C).

Clean all parts with cleaning compound (item 19, Appendix E) and clean rags (item 14, Appendix E).

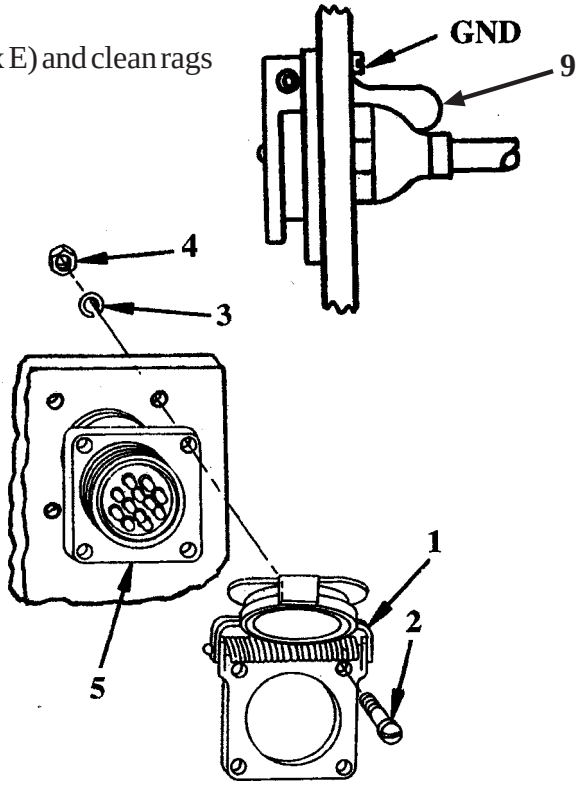

c. Inspection

1. Inspect for cracks, breaks or other damage.
2. Replace defective parts.

d. Installation

1. Insert bushing (8) over wires (7).
2. Solder wires (7) to terminals at rear of receptacle. (Refer to wiring diagrams, pages 4-58, 4-59, 4-65, or 4-66).
3. Slide nut (6) over wires (7) and bushing (8) to rear of receptacle (5). Tighten nut.
4. Make certain power source is disconnected and make a continuity check of all circuits throughout semitrailer, using a multimeter.
5. Wrap exposed wires and nut with tape, leaving ground wire (with lug) exposed for later installation (step 8).
6. Insert ground wire (9) and receptacle into hole in front of resistor box cover assembly (XM1063) or voltage converter box (M129A4). Place receptacle cover assembly over receptacle flange, with hinge at top of receptacle.

4-28. Intervehicular Cable Receptacle, 24-Volt (cont'd)

7. Align holes in receptacle cover (1) and receptacle (5) with holes in resistor box assembly. (Receptacle key must be next to cover hinge).

8. Secure with four screws (2), washers (3) and nuts (4), (secure ground lug with one of the washers and nuts).

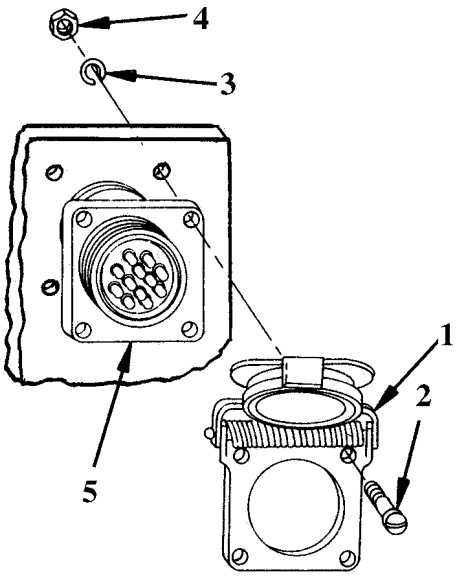

Follow on Maintenance: None

4-29. Intervehicular Cable Receptacle, 12-Volt

This task covers:

a. Removal
b. Cleaning
c. Inspection
d. Installation

Initial Setup:

Tools/Test Equipment:
Multimeter
General mechanic's tool kit (item 01, Appendix B)

Equipment Conditions:
Power source disconnected.

Materials/Supplies:
Cleaning compound (item 19, Appendix E)
Rags (item 14, Appendix E)

WARNING

Make sure all electrical power is disconnected before performing any maintenance on the electrical system. Serious injury or death may result if proper precautions are not taken.

a. Removal

1. Make sure power source is disconnected.

2. Remove two nuts (3), washers (2) and screws (1).

3. Loosen screws (5) securing each wire. Tag and remove wires from rear of receptacle (4).

4-29. Intervehicular Cable Receptacle, 12-Volt (cont'd)

b. Cleaning

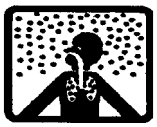


WARNING

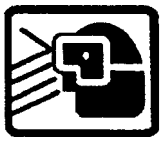


Cleaning compound is toxic and flammable. Avoid prolonged breathing of vapors. Avoid skin contact. Use only in a well-ventilated area. Keep away from open flame. Flash point of compound is 120° F (49° C).

Clean all parts with cleaning compound (item 19, Appendix E) and clean rags (item 14, Appendix E).

c. Inspection

1. Inspect for cracks, breaks or other damage.
2. Replace defective parts.

d. Installation

1. Insert each wire into its proper position at rear of receptacle and secure with screws (5) (refer to wiring diagrams, pages 4-58, 4-59, 4-65, or 4-66).
2. Position receptacle (4) and secure with two screws (1), washers (2) and nuts (3).
3. Make certain power source is disconnected and make a continuity check of all circuits throughout semitrailer, using multimeter.

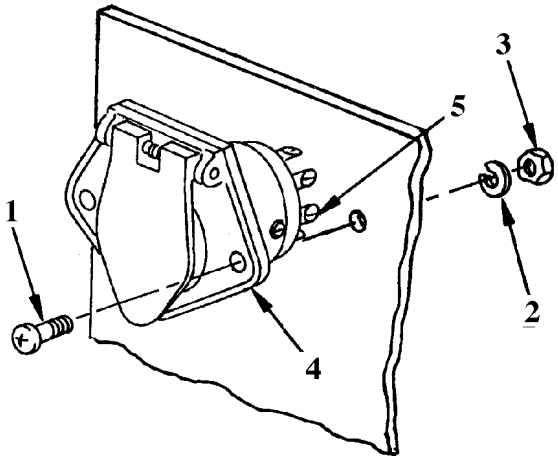

Follow-on maintenance: None

4-30. Wiring Harnesses

This task covers:

a. Removal

b. Installation

Initial Setup:

Tools/Test Equipment:
Multimeter
General mechanic's tool kit (item 01, Appendix B)

Equipment Conditions:
Power source disconnected.

Materials/Supplies:

WARNING

Make sure all electrical power is disconnected before performing any maintenance on the electrical system. Serious injury or death may result if proper precautions are not taken.

NOTE

See wiring diagrams on pages 4-8 through 4-66 before routing and connecting wiring harnesses.

a. Removal

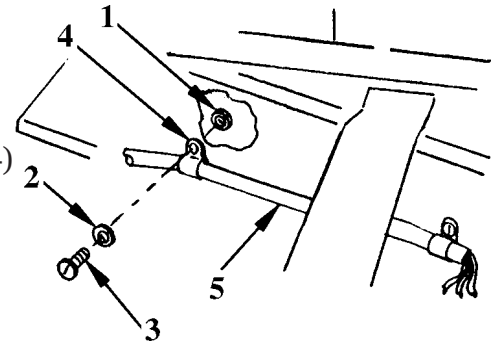

1. Disconnect harness from all connectors.
2. Remove nuts (1), washers (2), screws (3) and clamps (4) securing harness (5) to undercarriage.
3. Remove harness.

b. Installation

1. Position harness, threading through cutouts where required and secure with screws (3), washers (2), nuts (1) and clamps (4).
2. Connect harness to all connectors.
3. Make a continuity check of all circuits, using a multimeter.

Follow-on maintenance: None

4-31. Power Inlet (M129A4 Only)

This task covers:

a. Removal
b. Cleaning and inspection
c. Installation

Initial Setup:

Tools/Test Equipment:
General mechanic's tool kit (item 01, Appendix B)

Equipment Conditions:
Power source disconnected.

Materials/Supplies:
Rags (item 14, Appendix E)
Gasket

WARNING

Make sure all electrical power is disconnected before performing any maintenance on the electrical system. Serious injury or death may result if proper precautions are not taken.

a. Removal

1. Remove four screws (1) and pull power inlet (2) away from semitrailer wall.
2. Tag and disconnect three wires on rear of power inlet.
3. Remove power inlet and gasket (3). Discard gasket.

b. Cleaning and inspection

1. Clean all parts by wiping with clean rag. (Item 14, Appendix E)
2. Inspect for corrosion, rust or damaged socket or prongs. Replace if defective.

c. Installation

1. Connect wires at rear of power inlet (2).
2. Position power inlet (2) and gasket (3) on semitrailer wall.
3. Secure with four screws (1).

Follow-on maintenance: None

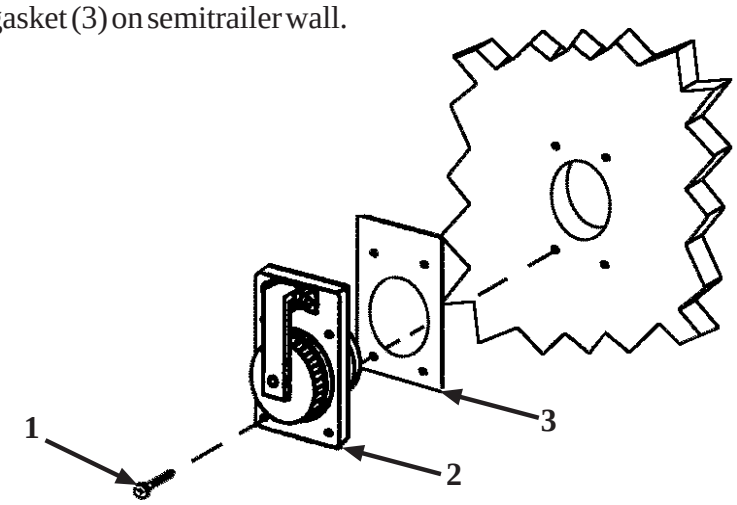

4-32. Toggle Switch and Backwall Receptacle Replacement (M129A4 Only)

This task covers:

a. Removal

b. Installation

Initial Setup:

Tools/Test Equipment:

General mechanic's tool kit (item 01, Appendix B)

Equipment Conditions:

Power source disconnected.

WARNING

Make sure all electrical power is disconnected before performing any maintenance on the electrical system. Serious injury or death may result if proper precautions are not taken.

NOTE

All toggle switches are removed/installed in the same manner. Bottom toggle switch is shown.

a. Removal

1. Remove screw (2) and wall plate (1).
2. Remove two screws (3) from connector (4).
3. Tag and disconnect wires. Remove connector (4).
4. Remove two screws (5) and electrical cover (6).
5. Remove two screws (7) from toggle switch (8).
6. Tag and disconnect wires. Remove toggle switch (8).

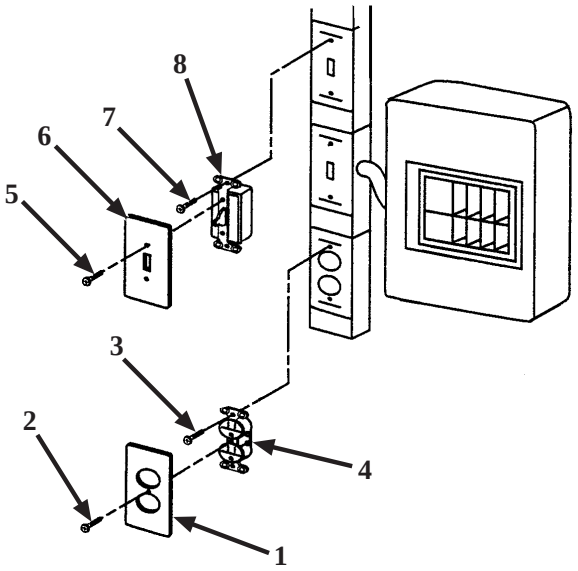

b. Installation

1. Connect wires. Position connector (4) and secure with two screws (3).
2. Install electrical wall plate (1) and screw (2).
3. Connect wires. Position toggle switch (8) and secure with two screws (7).
4. Install electrical cover (6) and two screws (5).

Follow-on maintenance: None

4-33. Fan Replacement (M129A4 Only)

This task covers:

a. Removal

b. Installation

Initial Setup:

Tools/Test Equipment:
General mechanic's tool kit (item 01, Appendix B)

Equipment Conditions:
Power source disconnected.

WARNING

Make sure all electrical power is disconnected before performing any maintenance on the electrical system. Serious injury or death may result if proper precautions are not taken.

a. Removal

1. Loosen grommet (1). Tag and disconnect wires (2) from fan (3) to capacitor box (4) (para. 4-34).
2. Remove four screws (5), nuts (6), fan (3) and screen (7). If damaged, discard screen .

b. Installation

1. Position screen (7) and fan (3) in place on interior wall of semitrailer. Secure with four screws (5) and nuts (6)
2. Connect wires (2) from fan (3) to capacitor box (4) (4-34). Tighten grommet (1).

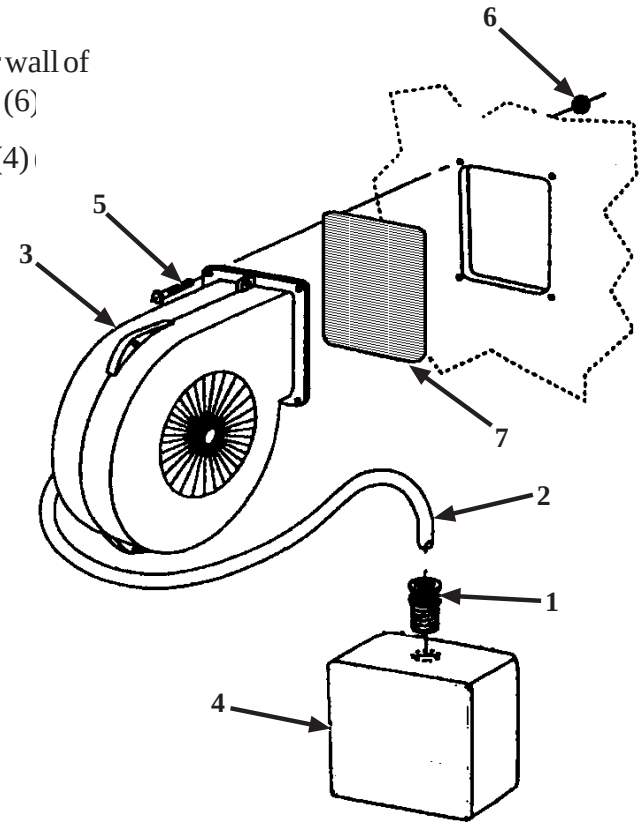

Follow-on maintenance: None

4-34. Capacitor Box Components (M129A4 Only)

This task covers:

a. Removal

b. Installation

Initial Setup:

Tools/Test Equipment:
General mechanic's tool kit (item 01, Appendix B)

Equipment Conditions:
Power source disconnected.

Materials/Supplies:

WARNING

Make sure all electrical power is disconnected before performing any maintenance on the electrical system. Serious injury or death may result if proper precautions are not taken.

a. Removal

CAUTION

Gasket is easily damaged. Use care when removing cover.

1. Remove four screws (1) and cover with gasket (2).
2. Remove bolt (3) and retaining strap (4).
3. Remove wire nut (5) securing ground wires (6) (green to green).
4. Tag and disconnect wires (7 and 8) from capacitors (9 and 10).
5. Loosen bondnut (11) and grommet (12) and pull wire (7) through top of box.

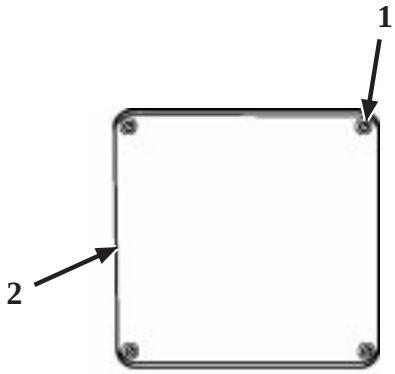

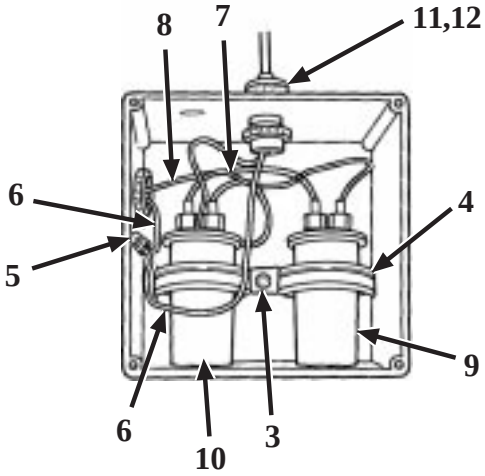

4-34. Capacitor Box Components (M129A4 Only) (cont'd)

6. Tag and disconnect wire (8) from side of box to capacitors (9 and 10).
7. Remove capacitors (9 and 10).

b. Installation

1. Pull wire (7) through top of box and wire (8) through side of box.
2. Install new wire nut (5) on ground wires (6).
3. Crimp new connectors and connect wires (7 and 8) to capacitors (9 and 10).
4. Position capacitors (9 and 10) in box and secure with retaining strap (4) and bolt (3).
5. Tighten bondnut (11) and grommet (12).
6. Install cover with gasket (2) and secure with four screws (1).

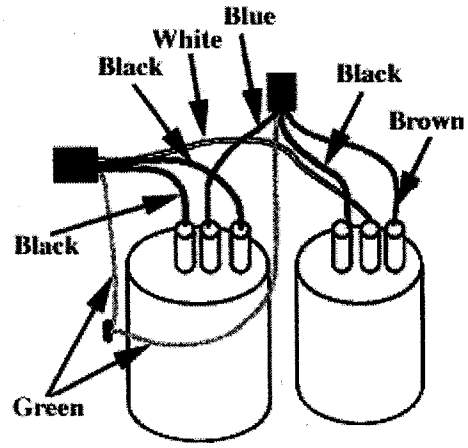

Follow-on maintenance: None

4-35. Marker Clearance Light (Excluding M129A4 With LED Lighting System)

This task covers:

a. Lamp replacement
b. Removal
c. Cleaning and inspection
d. Installation

Initial Setup:

Tools/Test Equipment:
General mechanic's tool kit (item 01, Appendix B)

Equipment Conditions:
Power source disconnected.

Materials/Supplies:
Dishwashing, soap (item 17, Appendix E)

a. Lamp Replacement

NOTE

All semitrailer running lights are controlled by the electrical system of the towing vehicle. A master switch on the towing vehicle controls the service and blackout modes of operation of the lights. Place this switch in the proper position prior to testing the lamps after installation. Lamps will not light if towing vehicle switch is in the OFF position.

1. Remove two screws (1) and lens (2).
2. Push in on lamp (3), turning counterclockwise to remove from socket.
3. Insert new lamp (3) into socket. Press in and turn clockwise.
4. Test lamp by turning on switch in towing vehicle.
5. Position lens (2) on light and secure with two screws (1).

b. Removal

1. Remove two screws (1) and remove lens (2).
2. Disconnect wire assembly (5) at rear of light.
3. Remove two screws (4) and light body (6).

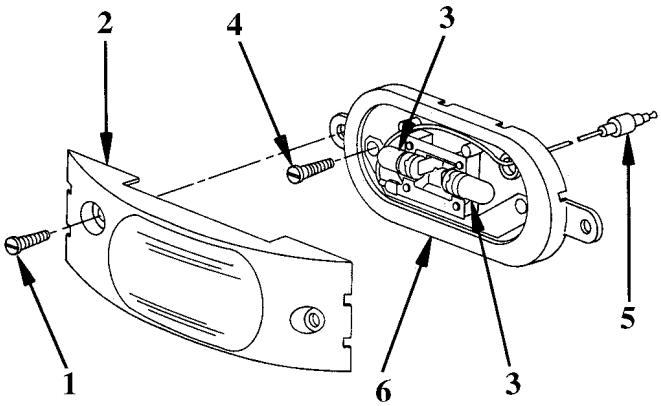

4-35. Marker Clearance Light (Excluding M129A4 With LED Lighting System) (cont'd)

c. Cleaning and Inspection

CAUTION

Do not use dry cleaning solvent. It will damage the body of the light. Remove lamps before cleaning.

1. Clean light, using clean water and soap (item 17, Appendix E) solution. Dry thoroughly with clean rags (item 14, Appendix E).
2. Check wiring for damaged or worn insulation.
3. Inspect body for cracks, dents, warpage and cracked or broken lens.
4. Make sure all parts are in good condition and will make good electrical contact and watertight connections.
5. Replace light if defective.

d. Installation

1. Position light body (6) and secure with screws (4).
2. Connect wire assembly (5).
3. Position lens (2) and secure with two screws (1).
4. Test light by turning on switch in towing vehicle.

Follow-on maintenance: None

4-36. Marker Clearance Light (Including M129A4 With LED Lighting System)

This task covers:

a. Removal

b. Cleaning and inspection

c. Installation

Initial Setup:

Tools/Test Equipment:

General mechanic's tool kit (item 01, Appendix B)

Equipment Conditions:

Power source disconnected.

Materials/Supplies:
Dishwashing, soap (item 17, Appendix E)
Rags (item 14, Appendix E)

a. Removal

NOTE

All semitrailer running lights are controlled by the electrical system of the towing vehicle. A master switch on the towing vehicle controls the service and blackout modes of operation of the lights. Place this switch in the proper position prior to testing the lamps after installation. Marker clearance light (LED) assemblies will not light if towing vehicle switch is in the OFF position.

1. Remove two screws (1) from marker clearance light (LED) assembly (2).
2. Remove wiring harness plug (3) from back of marker clearance light (LED) assembly (2).
3. Remove marker clearance light (LED) assembly (2).

b. Cleaning and Inspection

CAUTION

Do not use dry cleaning solvent. It will damage the body of the light.

1. Clean light, using clean water and soap (item 17, Appendix E) solution. Dry thoroughly with clean rags (item 14, Appendix E).
2. Check wiring for damaged or worn insulation.
3. Inspect body for cracks, dents, warpage and cracked or broken lens.
4. Make sure all parts are in good condition and will make good electrical contact and watertight connections.
5. Replace light if defective.

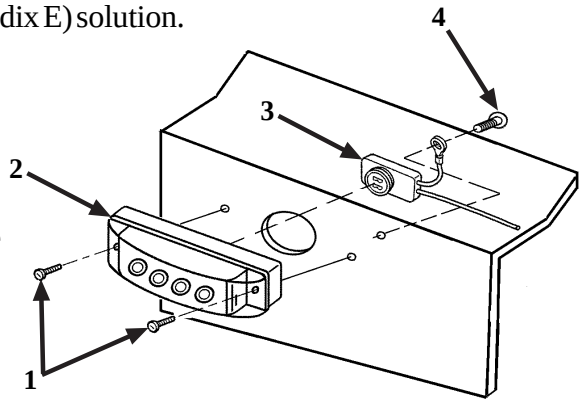

c. Installation

1. Ensure wiring harness grounding screw (4) is properly installed and tightened.
2. Install wiring harness plug (3) in the back of marker clearance light (LED) assembly (2).
3. Install two screws (1) in marker clearance light (LED) assembly (2).
4. Test light by turning on switch in towing vehicle.

Follow-on maintenance: None

4-37. Blackout Stop and Taillight

This task covers:

a. Removal
b. Cleaning and inspection
c. Installation

Initial Setup:

Tools/Test Equipment:
General mechanic's tool kit (item 01, Appendix B)

Equipment Conditions:
Power source disconnected.

Materials/Supplies:
Dishwashing, soap (item 17, Appendix E)
Rags (item 14, Appendix E)

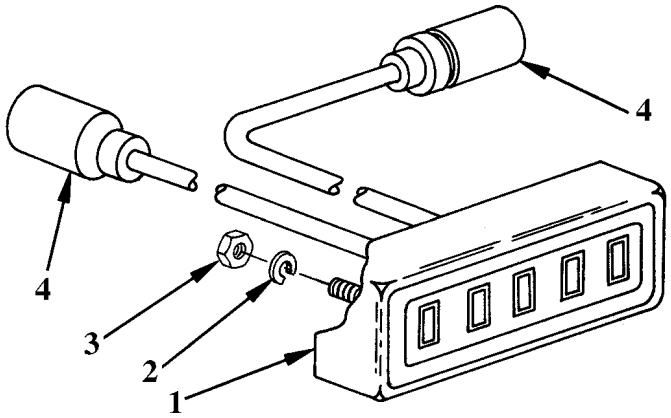

a. Removal

1. Disconnect electrical connectors (4).
2. Remove nuts (3) and washers (2) and light (1).

b. Cleaning and inspection

CAUTION

Do not use dry cleaning solvent. It will damage the body of the light.

1. Clean light, using clean water and soap (item 17, Appendix E) solution.

   Dry thoroughly with clean rags (item 14, Appendix E).
2. Check wiring for damaged or worn insulation.
3. Inspect body for cracks, dents, warpage and cracked or broken lens.
4. Make sure all parts are in good condition and will make good electrical contact and watertight connections.
5. Replace light if defective.

c. Installation

1. Connect electrical connections (4).
2. Position light (1) and secure with nuts (3) and washers (2).
3. Test light by placing towing vehicle light switch in the BLACKOUT position and then operating the proper switch, brake pedal or turn signal lever.

Follow-on maintenance: None

4-38. Stop and Turn Light (Excluding M129A4 With LED Lighting System)

This task covers:

a. Removal
b. Cleaning and inspection
c. Installation

Initial Setup:

Tools/Test Equipment:
General mechanic's tool kit (item 01, Appendix B)

Equipment Conditions:
Power source disconnected.

Materials/Supplies:
Dishwashing, soap (item 17, Appendix E)
Rags (item 14, Appendix E)

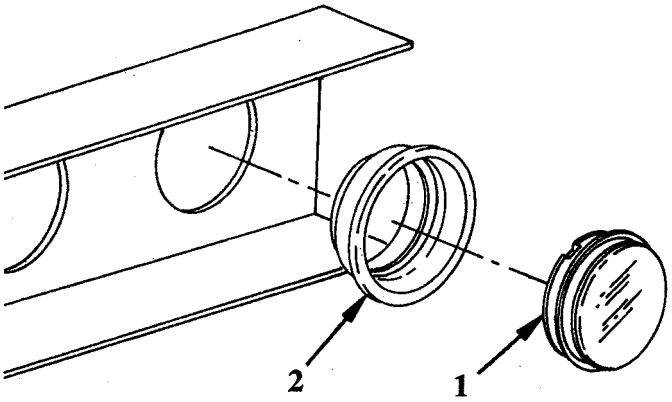

a. Removal

1. Pry light (1) from grommet (2).
2. Disconnect electrical harness from rear of light (1).
3. Use same procedure to remove grommet (2) from opening in dolly frame.

b. Cleaning and inspection

CAUTION

Do not use dry cleaning solvent. It will damage the body of the light.

1. Clean light, using clean water and soap (item 17, Appendix E) solution. Dry thoroughly with clean rags (item 14, Appendix E).
2. Check wiring for damaged or worn insulation.
3. Inspect body for cracks, dents, warpage and cracked or broken lens.
4. Inspect rubber grommet for excessive wear, deterioration and secure fit in dolly frame. Replace if defective.

c. Installation

1. Insert grommet (2) into opening in dolly frame. Make certain it fits properly and securely.
2. Connect harness at rear of light (1) and insert light into grommet (2).
3. Test light by turning on towing vehicle light switch and operating brake pedal and turn signal lever.

Follow-on maintenance: None

4-39. Stop And Turn Lamp (Including M129A4 With LED Lighting System)

This task covers:

a. Removal

b. Cleaning and inspection

c. Installation

Initial Setup:

Tools/Test Equipment:

General mechanic's tool kit (item 01, Appendix B)

Equipment Conditions:

Power source disconnected.

Materials/Supplies:
Dishwashing, soap (item 17, Appendix E)
Rags (item 14, Appendix E)

a. Removal

NOTE

All semitrailer running lights are controlled by the electrical system of the towing vehicle. A master switch on the towing vehicle controls the service and blackout modes of operation of the lights. Place this switch in the proper position prior to testing the lamps after installation. Stop and turn lamp (LED) assemblies will not light if towing vehicle switch is in the OFF position.

1. Remove two screws (1) from stop and turn lamp (LED) assembly (2).
2. Remove wiring harness plug (3) from back of stop and turn lamp (LED) assembly (2).
3. Remove stop and turn lamp (LED) assembly (2).

b. Cleaning and Inspection

CAUTION

Do not use dry cleaning solvent. It will damage the body of the light.

1. Clean light, using clean water and soap (item 17, Appendix E) solution. Dry thoroughly with clean rags (item 14, Appendix E).
2. Check wiring for damaged or worn insulation.
3. Inspect body for cracks, dents, warpage and cracked or broken lens.
4. Make sure all parts are in good condition and will make good electrical contact and watertight connections.
5. Replace light if defective.

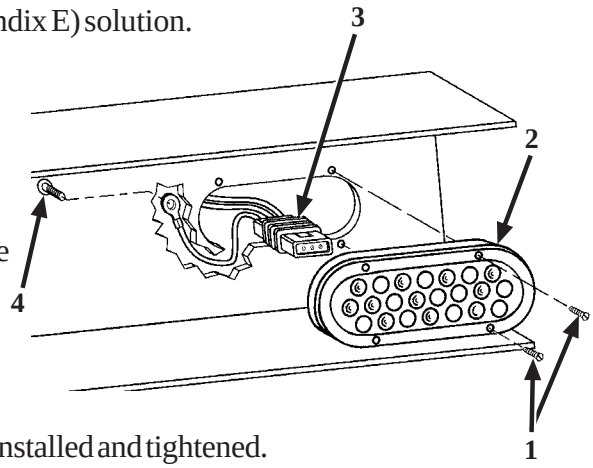

c. Installation

1. Ensure wiring harness grounding screw (4) is properly installed and tightened.
2. Install wiring harness plug (3) in the back of stop and turn lamp (LED) assembly (2).
3. Install two screws (1) in stop and turn lamp (LED) assembly (2).
4. Test light by turning on switch in towing vehicle.

Follow-on maintenance: None

4-40. Interior Lights (M129A4 Only)

This task covers:

a. Lamp replacement
b. Starter replacement
c. Lighting fixture removal
d. Lighting fixture installation

Initial Setup:

Tools/Test Equipment:
General mechanic's tool kit (item 01, Appendix B)

Equipment Conditions:
110-volt power source disconnected.

WARNING

Make sure all electrical power is disconnected before performing any maintenance on the electrical system. Serious injury or death may result if proper precautions are not taken.

a. Lamp replacement

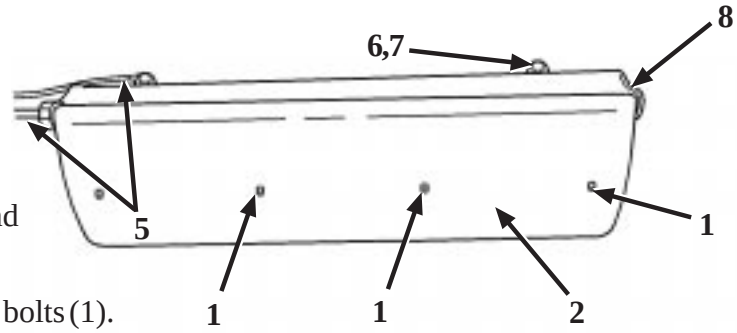

1. Remove four bolts (1) and cover (2).
2. Turn lamp (3) 1/4 turn and pull out.
3. Position new lamp (3). Turn 1/4 turn and snap into place.
4. Position cover (2) and secure with four bolts (1).

b. Starter replacement

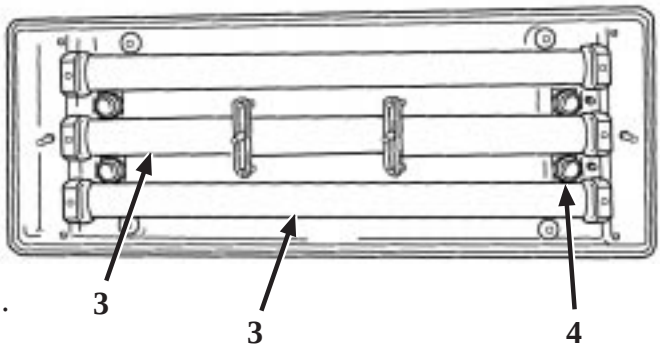

1. Remove four bolts (1) and cover (2).
2. Push down on starter (4) and turn 1/4 turn. Remove starter.
3. Position new starter (4). Push down and turn 1/4 turn to secure in place.
4. Position cover (2) and secure with four bolts (1).

c. Lighting fixture removal

1. Tag and disconnect wires (5).
2. Remove four screws (6), lockwashers (7) and lighting fixture (8).

d. Lighting fixture installation

1. Install lighting fixture (8) and four screws (6) and lockwashers (7).
2. Connect wires (5).

Follow-on maintenance: None

4-41. Interior Electrical Receptacle (M129A4 Registration Numbers NX0RKB And Subsequent)

This task covers:

a. Wall plate removal
b. Electrical receptacle removal
c. Electrical receptacle installation
d. Wall plate installation

Initial Setup:

Tools/Test Equipment:
General mechanic's tool kit (item 01, Appendix B)

Equipment Conditions:
110-volt power source disconnected.

WARNING

Make sure all electrical power is disconnected before performing any maintenance on the electrical system. Serious injury or death may result if proper precautions are not taken.

a. Wall plate removal

1. Remove screw (1) and wall plate (2).

b. Electrical receptacle removal

1. Remove four screws (3) from electrical receptacle (4).
2. Remove six wires (5) from electrical receptacle (4).
3. Removal electrical receptacle (4) from electrical junction box (6).

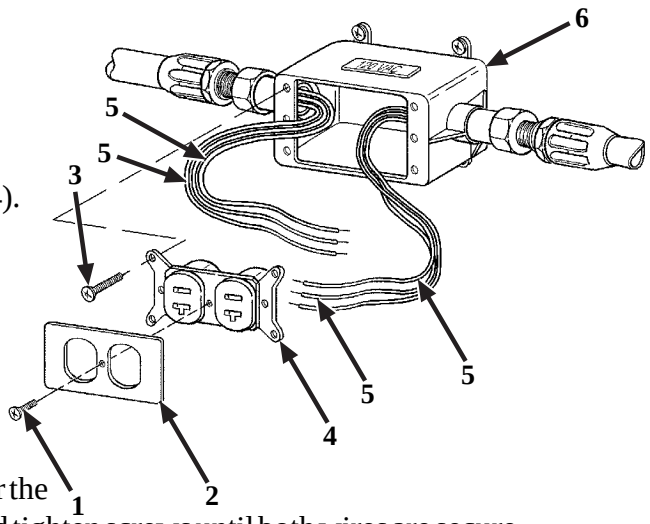

c. Electrical receptacle installation

1. Install six wires (5) on the electrical receptacle (4) as follows:
   a. Insert the black wires into the two holes under the dark screws on each side of the receptacle and tighten screws until both wires are secure.
   b. Insert the white wires into the holes under the light screws on the opposite side of the receptacle and tighten until both these wires are secure.
   c. Wrap the green wires around the grounding screw protruding from the corner of the receptacle and tighten screw until both the green wires are secure to the receptacle.
2. Push electrical receptacle (4) into electrical junction box (6) and install with four machine screws (3).

d. Wall plate installation

1. Install wall plate (2) with machine screw (1).

Follow-on maintenance: None

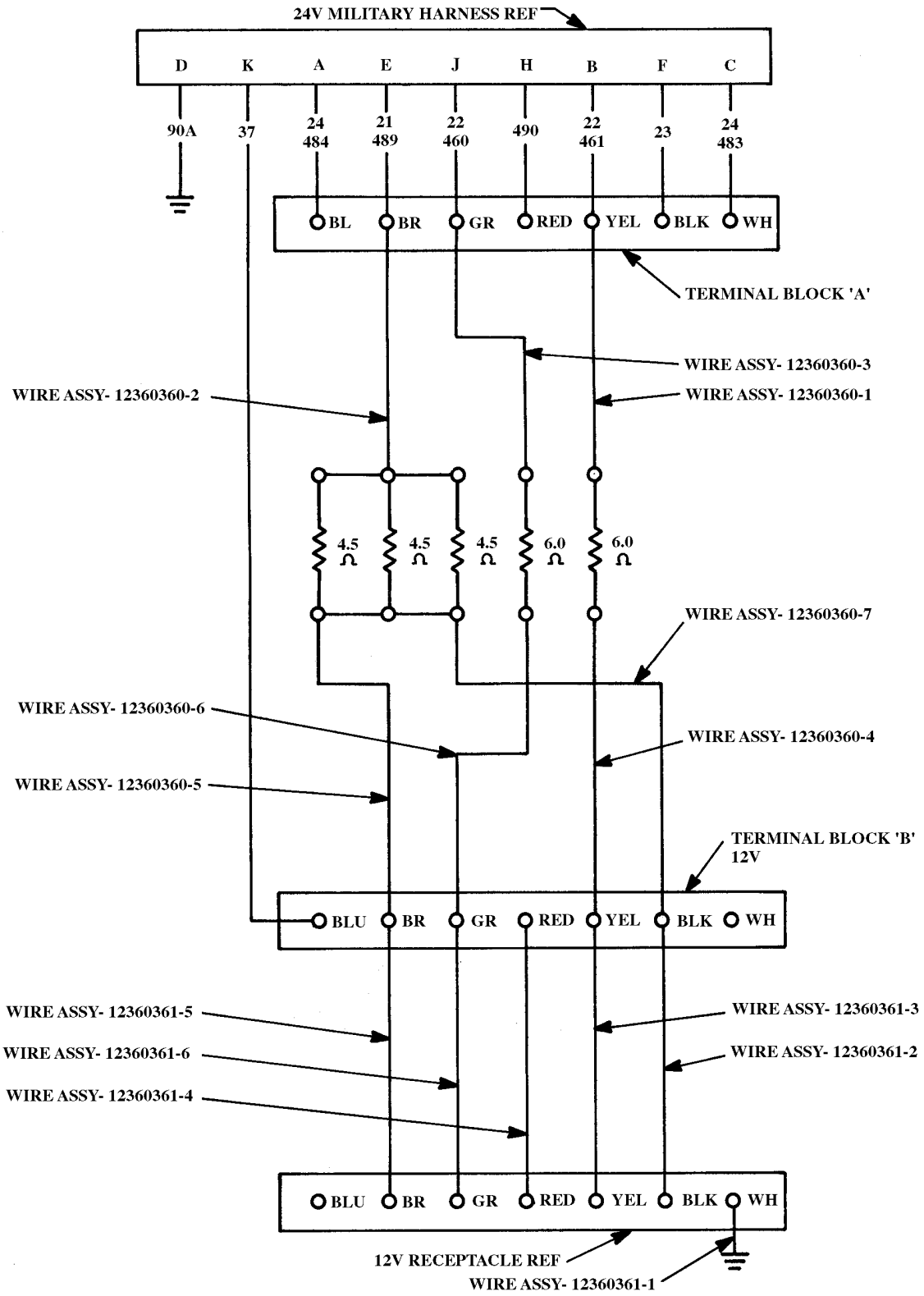

Wiring Diagram, Body Lighting (XM1063)

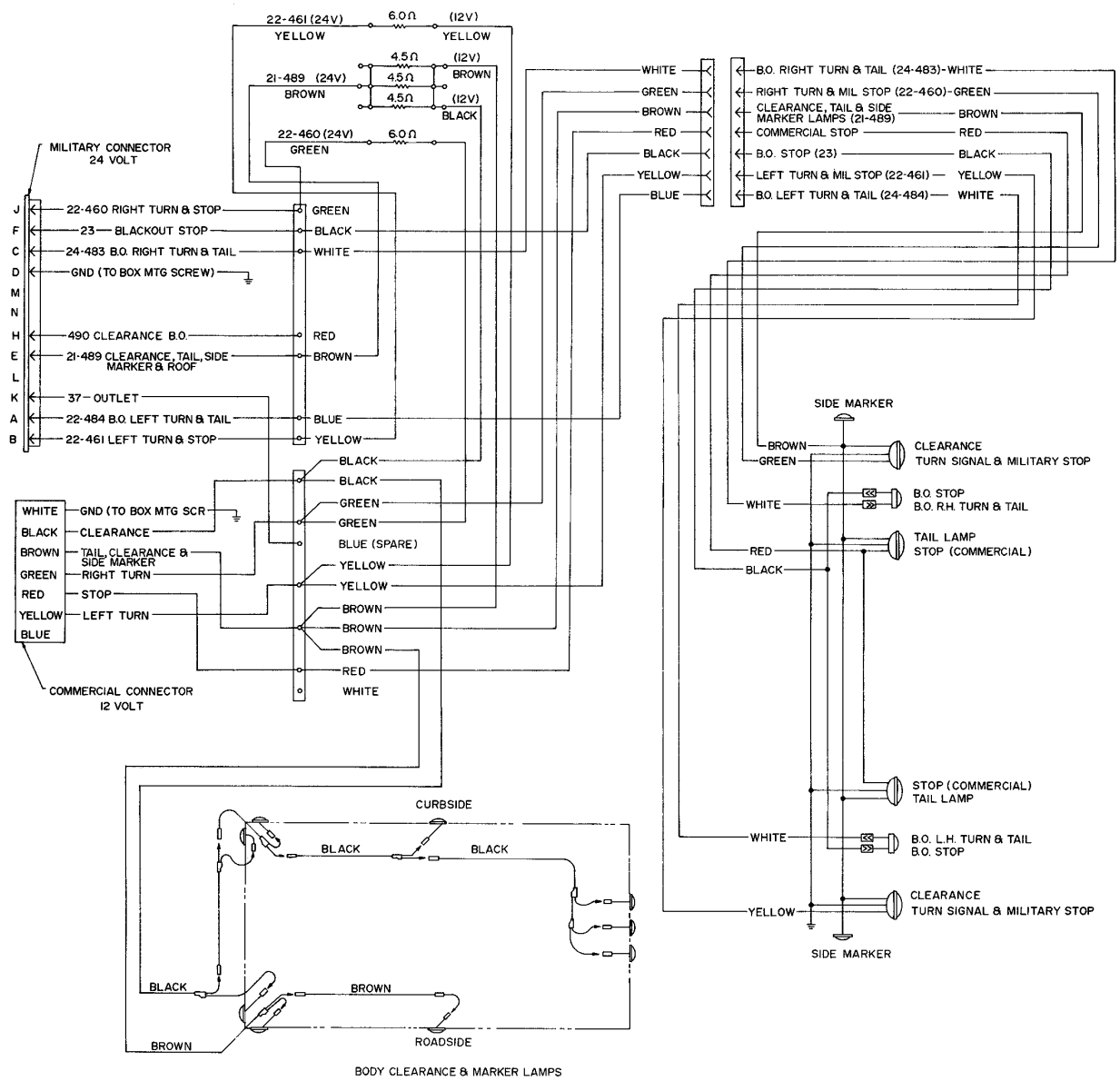

Wiring Diagram, Resistor Box (XM1063)

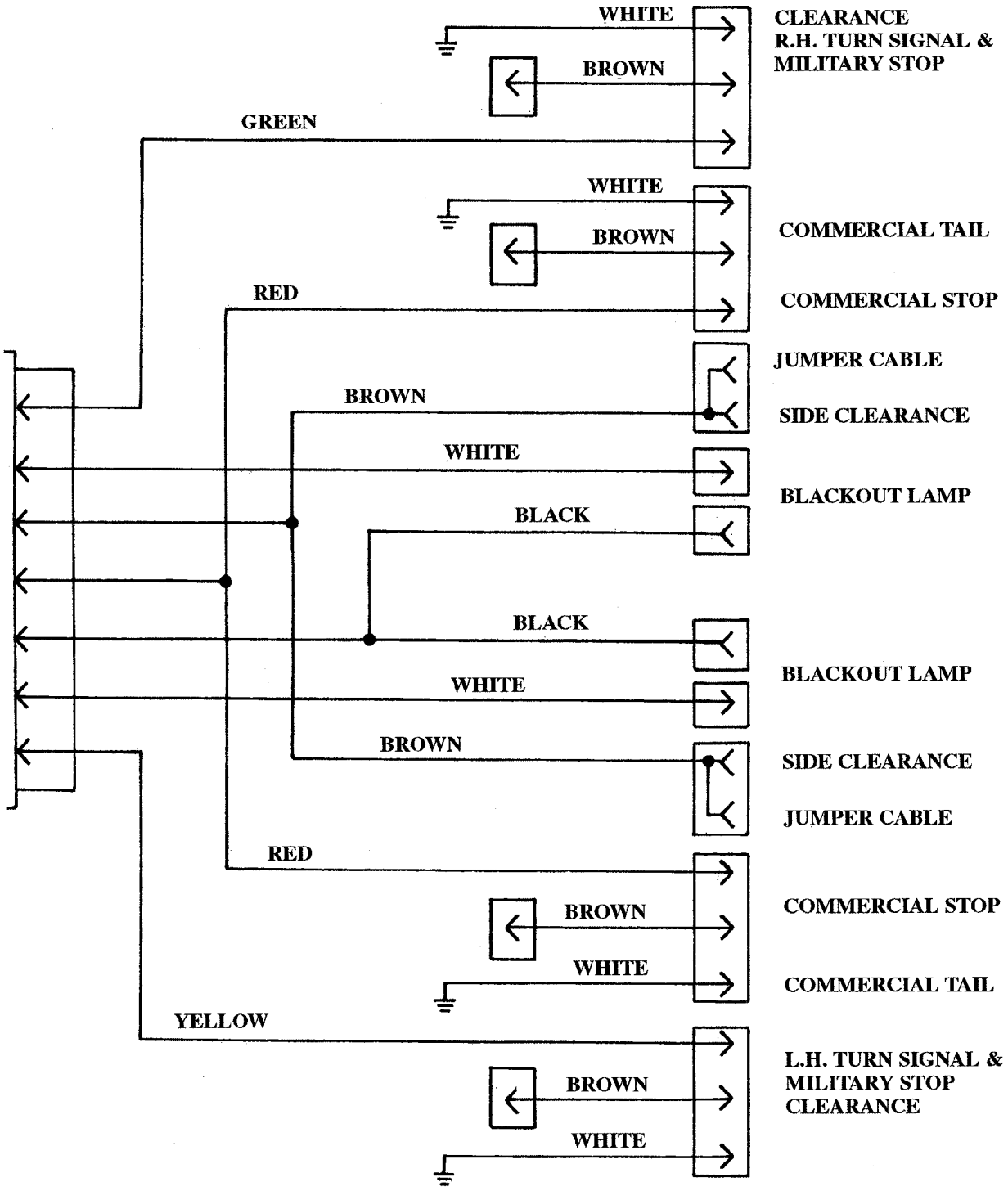

Wiring Diagram, Dolly Lighting

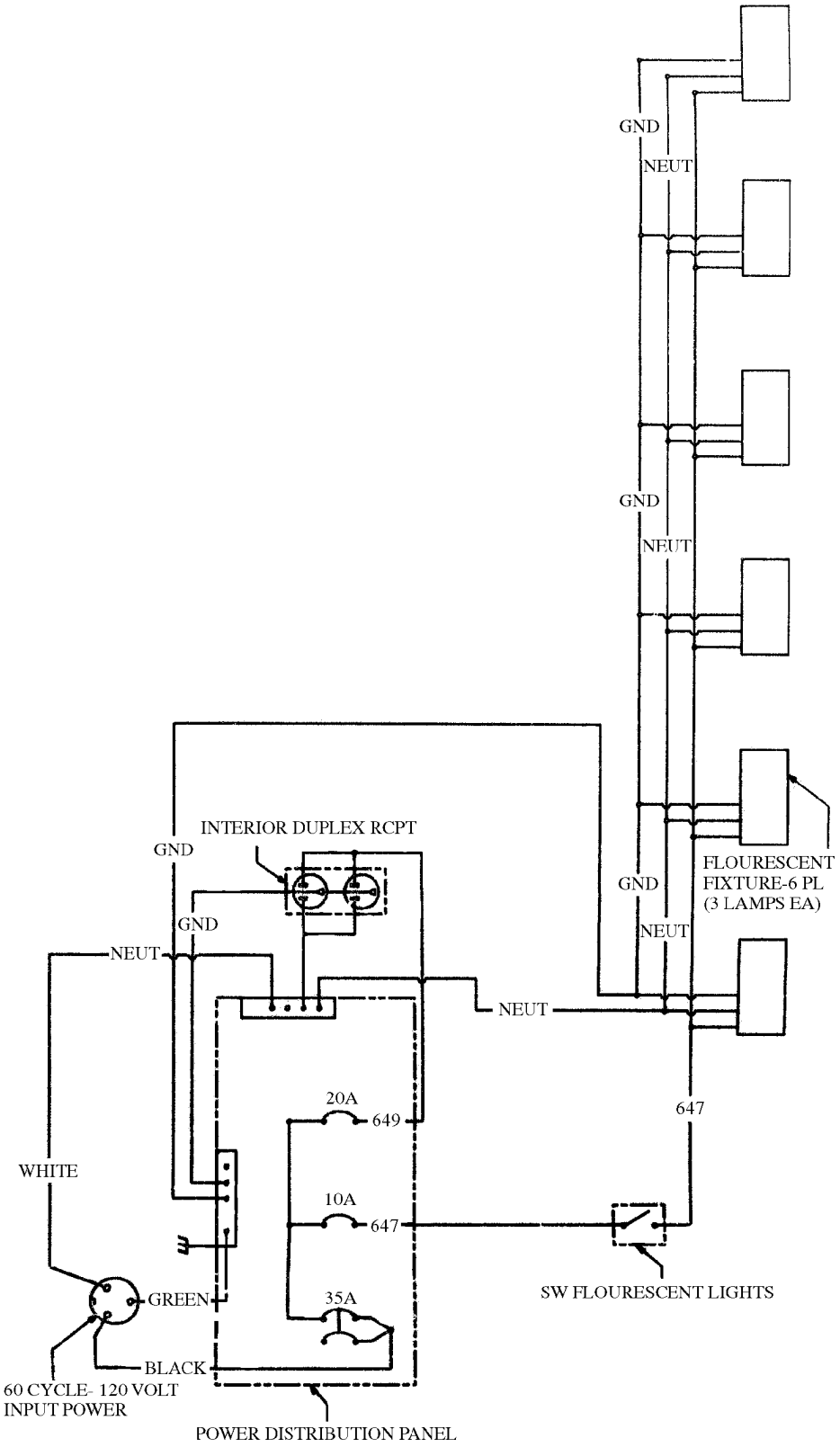

Wiring Diagram, Interior Lighting (M129A4)

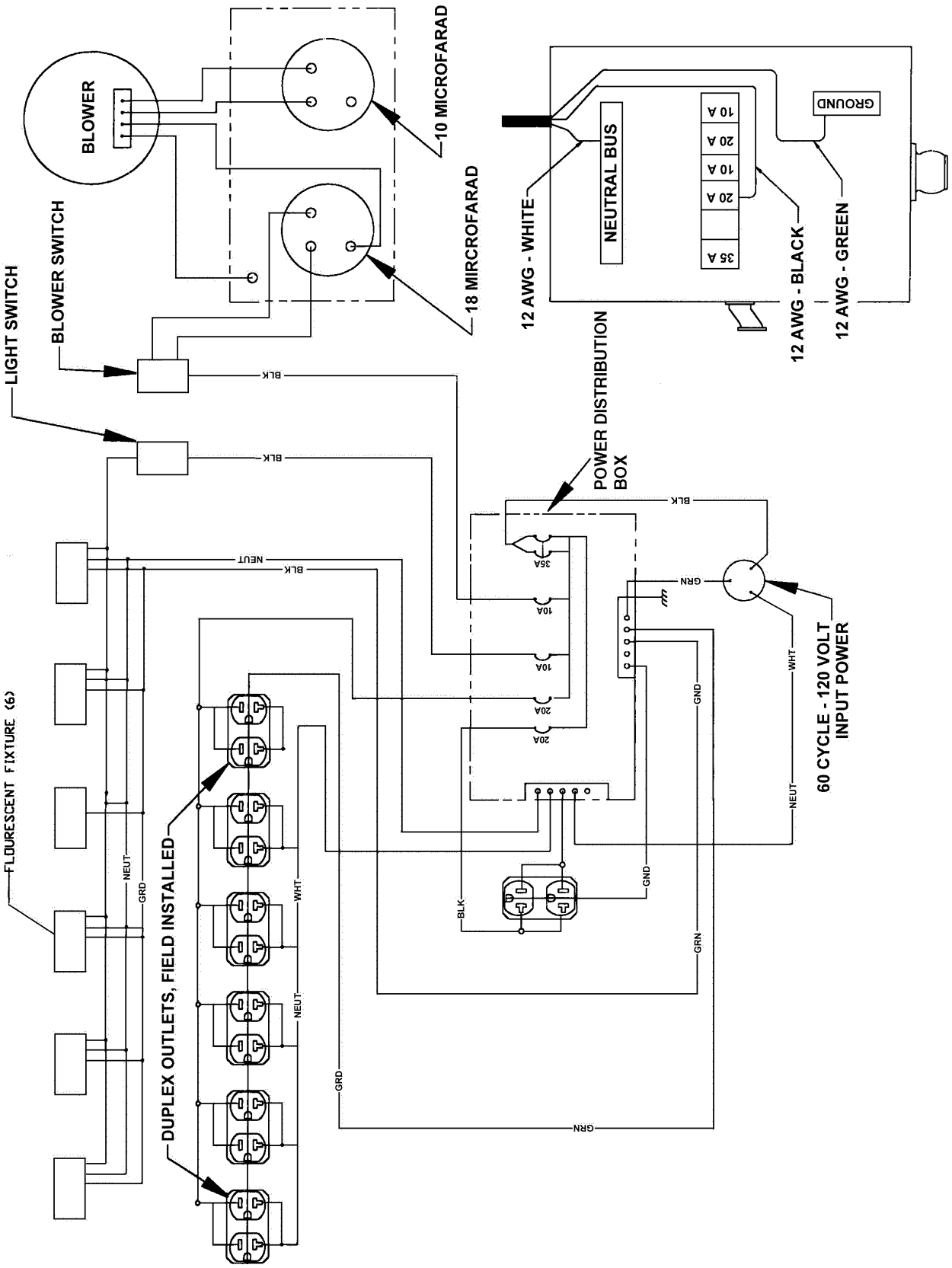

Wiring Diagram, Interior Lighting with Electrical Receptacles (Including M129A4 Registration Numbers NX0RKB and Subsequent)

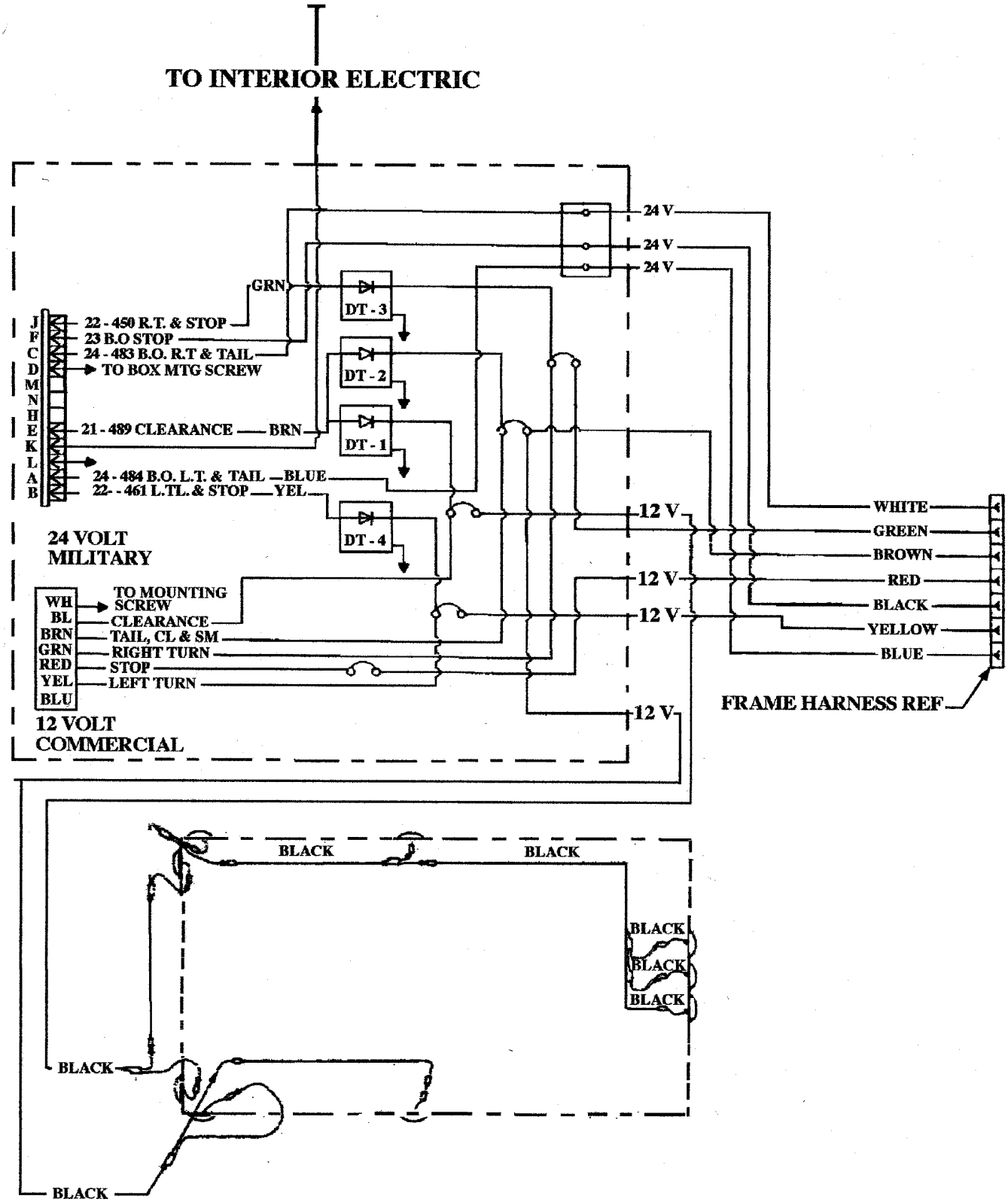

Wiring Diagram, Body (Excluding M129A4 With LED Lighting System)

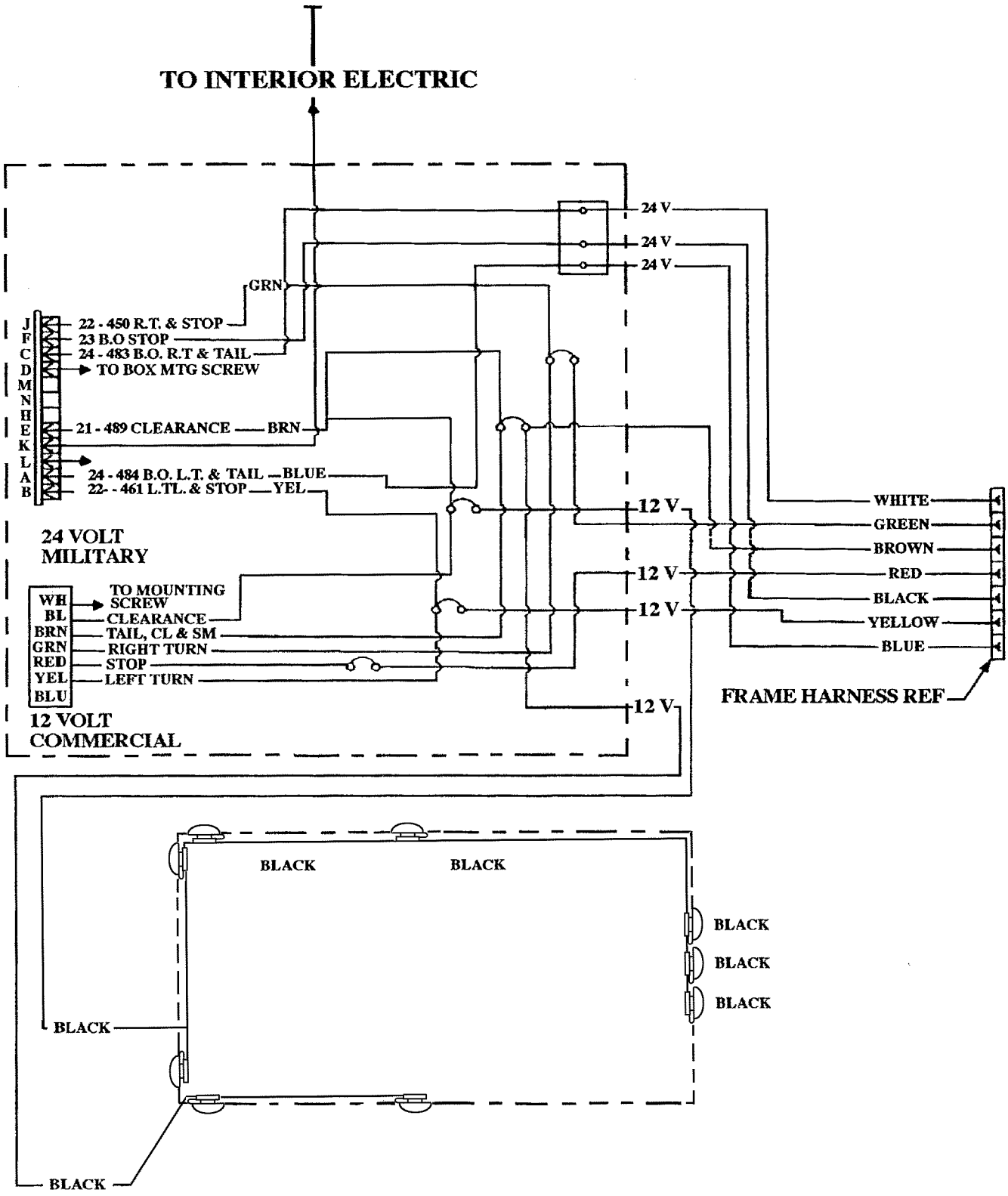

Wiring Diagram, Body (Including M129A4 With LED Lighting System)

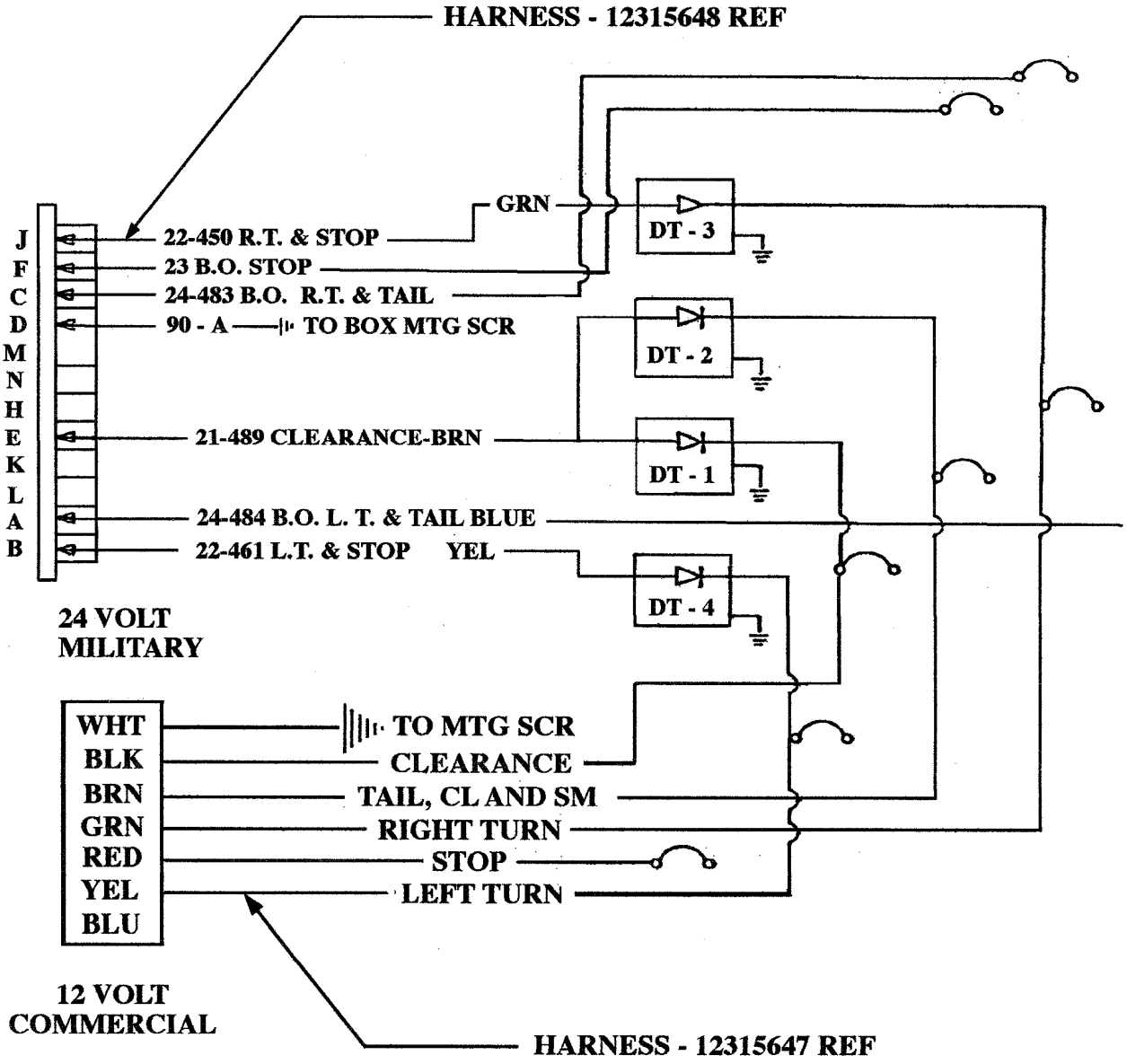

Wiring Diagram, Voltage Converter Box (Excluding M129A4 With LED Lighting System)

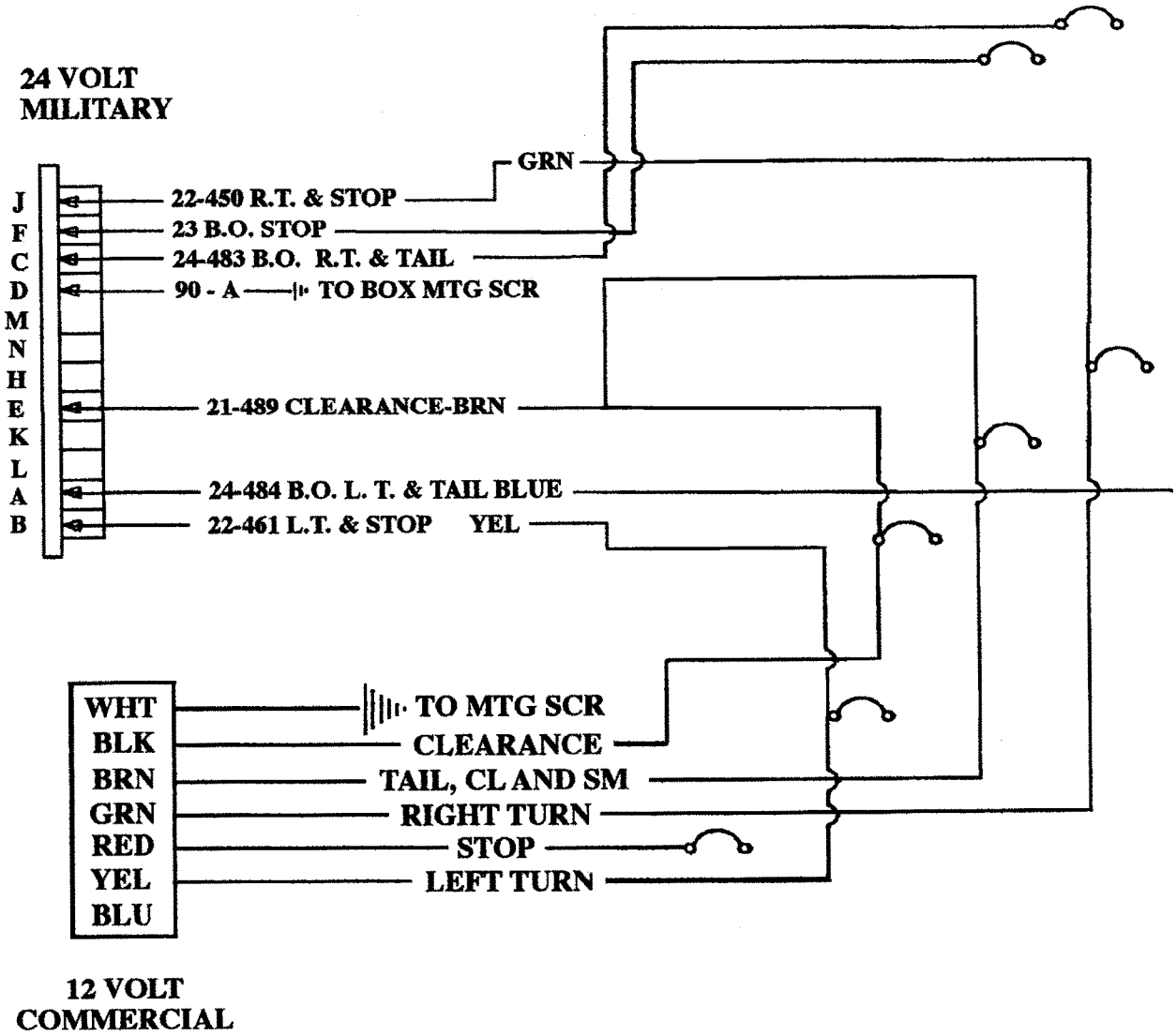

Wiring Diagram, Voltage Converter Box (Including M129A4 With LED Lighting System)

Section VII. BRAKE SYSTEM MAINTENANCE

4-42. General

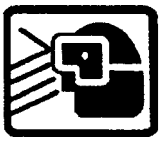

WARNING

Air under 100 psi pressure is used in the operation of the air brake system. Serious injury or death can result if precautions are not taken.

a. The following paragraphs cover procedures for testing, removal, disassembly, assembly and installation of brake shoe assembly, brake air chamber assembly, relay valve, ratio relay valve, air reservoir and air lines. These paragraphs also cover cleaning, inspection and repair of air lines.

b. The service brakes are straight air type with automatic break-away protection. When the semitrailer brake system is properly connected to the service brake system of the towing vehicle, the towing vehicle brake pedal operates the brakes on both vehicles.

4-43. Front Relay Valve

This task covers:

a. Operating test
b. Leakage test
c. Removal
d. Cleaning
e. Inspection
f. Installation

Initial Setup:

Tools/Test Equipment:
General mechanic's tool kit (item 01, Appendix B)

Equipment Conditions:
Towing vehicle attached and air brake system charged.

Materials/Supplies:
Dry cleaning solvent (item 3, Appendix E)
Teflon tape (item 12, Appendix E)
Brush (item 15, Appendix E)

a. Operating test

1. With brake air system of semitrailer connected and charged, check if brakes apply properly.
2. Release brakes and check to see that air pressure is being exhausted promptly.
3. With semitrailer brake system fully charged, close shutoff valve in emergency line tube on towing vehicle and disconnect brake air hose coupling tagged EMERGENCY. Check whether semitrailer brakes apply automatically.
4. Connect brake air hose to coupling tagged EMERGENCY. Open shutoff valve on towing vehicle and check for automatic release of brakes.

b. Leakage test

1. With brake air system of semitrailer connected and charged, apply soap and water solution to cover flanges which hold diaphragms and to brake air hose coupling tagged SERVICE. No leakage should be present. If leaks are detected, tighten attaching hardware and tighten coupling as required.
2. Apply brakes and apply soap and water solution to all air fittings and check for leaks.
3. Disconnect EMERGENCY coupling (step 3, operating test), coat exhaust port with soap and water solution and test for leaks.
4. Leakage in steps 2 and 3 must not exceed one inch bubble in two seconds. If excess leakage is found, replace relay valve.

4-43. Front Relay Valve (cont'd)

c. Removal

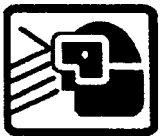

WARNING

Wear goggles when opening air reservoir drain cock. Failure to do so could result in serious eye injury from high pressure air.

NOTE

XM1063 has threeair reservoirs, M129A4 has two air reservoirs. XM0163 is shown.

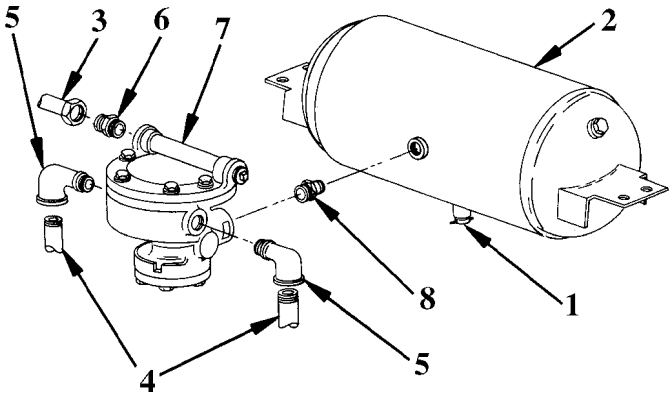

1. Open drain cocks (1) on all air reservoirs (2) and allow air pressure to bleed off.
2. Disconnect one input line (3) and three output lines (4) from two elbows (5) and two male connectors (6).
3. Remove two elbows (5) and two male connectors (6).
4. Remove relay valve assembly (7) by turning ei assembly counterclockwise.
5. Remove nipple (8).

d. Cleaning

1. Clean mud and dirt from exposed surfaces with water and a stiff brush (item 15, Appendix E).


WARNING

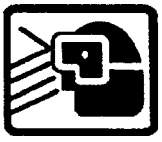


Dry cleaning sosolvent (P-D-680) is toxic and flammable. Avoid prolonged breathing of vapors. Avoid skin contact. Use only in a well-ventilated area. Keep away from open flame. Flash point of solvent is 138° F (50° C).

2. Remove grease and oil with dry cleaning solvent (item 3, Appendix E). Dry thoroughly.

e. Inspection

1. Inspect for loose, missing or damaged parts.
2. Inspect valve, elbows and connectors for cracks, dents, holes and warps.
3. Inspect for rust, corrosion and marred paint. Clean, treat, prime and paint as required.
4. Replace defective parts.

4-43. Front Relay Valve (cont'd)

f. Installation

NOTE

Apply teflon tape (item 12, Appendix E) to threads of air line connections before installation.

1. Install nipple (8) at rear of relay valve.
2. Install relay valve to reservoir by turning entire assembly clockwise.
3. Install two elbows (5) and two male connectors (6).
4. Connect input line (3) and output lines (4) to elbows (5) and connectors (6).
5. Close all drain cocks (1) and pressurize air brake system.
6. Check for leaks (para. 4-39b).

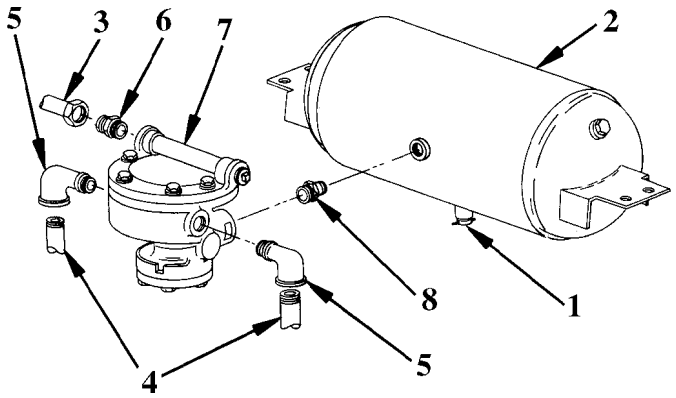

4-44. Rear Relay Valve

This task covers:

a. Removal
b. Cleaning and inspection
c. Installation

Initial Setup:

Tools/Test Equipment:

Materials/ Supplies:

Dry cleaning solvent (item 3, Appendix E)
Teflon tape (item 12, Appendix E)
Brush (item 15, Appendix E)

Equipment Conditions:

Operating test performed (para. 4-43a).
Leakage test performed (para. 4-43b).
All drain cocks open (para. 4-46).

a. Removal

1. Disconnect input line (3) from male connector (6) and two output lines (4) from elbows (5).
2. Remove two elbows (5) and male connector (6).
3. Remove relay valve (7) by turning entire valve assembly counterclockwise.

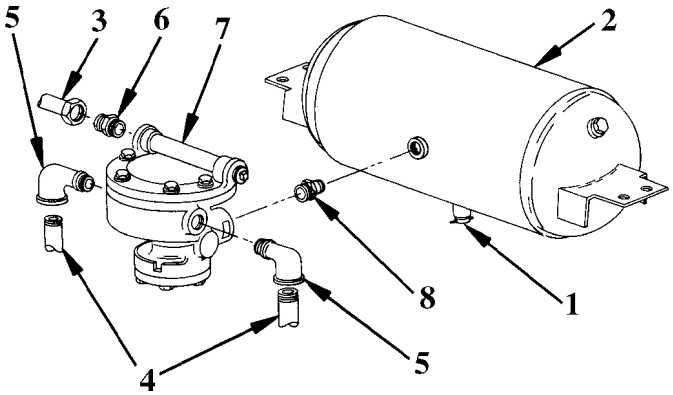

4. Remove nipple (8).

4-44. Rear Relay Valve (cont'd)

b. Cleaning and inspection

1. Clean mud and dirt from exposed surfaces with water and a stiff brush.

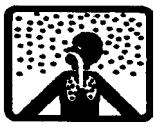


WARNING

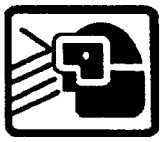


Dry cleaning so solvent (P-D-680) is toxic and flammable. Avoid prolonged breathing of vapors. Avoid skin contact. Use only in a well-ventilated area. Keep away from open flame. Flash point of solvent is 138° F (50° C).

2. Remove grease and oil with dry cleaning solvent (item 3, Appendix E). Dry thoroughly.
3. Inspect for loose, missing or damaged parts.
4. Inspect valve, elbows and connectors for cracks, dents, holes and warps. Replace defective parts.
5. Inspect for rust, corrosion and marred paint. Clean, treat, prime and paint as required.

c. Installation

NOTE

Apply teflon tape (item 12, Appendix E) to threads of air line connections before installation.

1. Install nipple (8) at rear of relay valve.
2. Install relay valve (7) to reservoir (2) by turning entire assembly clockwise.
3. Install two elbows (5) and male connector (6).
4. Connect input line (3) to connector (6) and output lines (4) to two elbows (5).
5. Close all drain cocks (1) and pressurize air brake system.
6. Check for leaks (para. 4-43b).

4-45. Ratio Relay Valve

This task covers:

a. Removal
b. Cleaning
c. Inspection
d. Installation

Initial Setup:

Tools/Test Equipment:
General mechanic's tool kit (item 01, Appendix B)

Equipment Conditions:
Operating test performed (para. 4-43a).
Leakage test performed (para. 4-43b).
All drain cocks open (para. 4-46).

Materials/Supplies:
Dry cleaning solvent (item 3, Appendix E)
Teflon tape (item 12, Appendix E)
Brush (item 15, Appendix E)

a. Remova

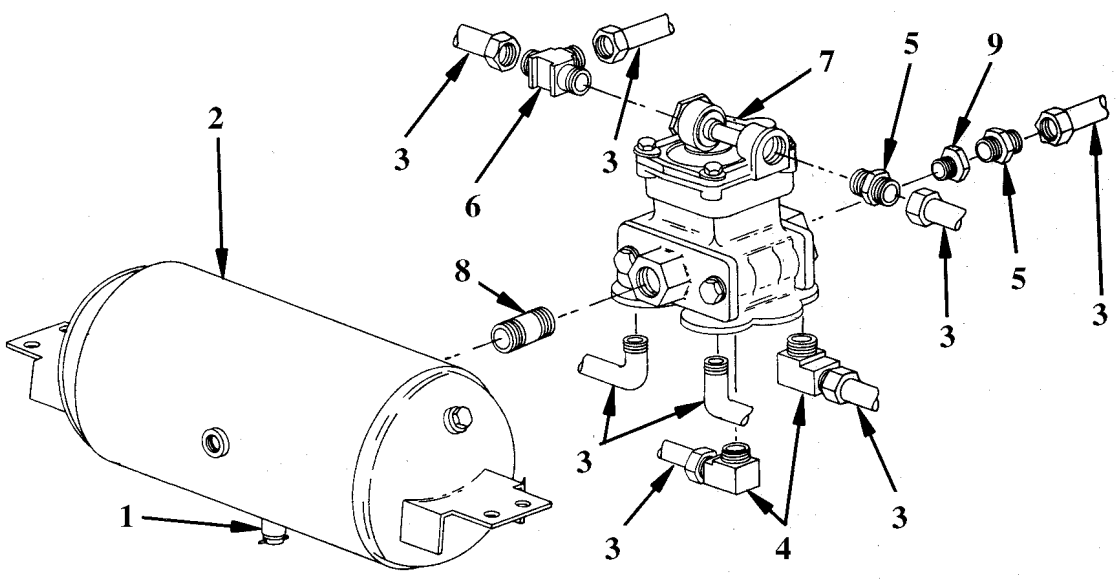

1. Disconnect eight air lines (3). Tag lines with port identification.
2. Remove two elbows (4), two male connectors (5) and tee (6).
3. Remove ratio relay valve (7) by turning entire valve assembly counterclockwise.
4. Remove nipple (8).

4-45. Ratio Relay Valve (cont'd)

b. Cleaning

1. Clean mud and dirt from exposed surfaces with water and a stiff brush.

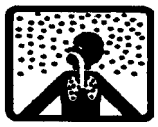


WARNING

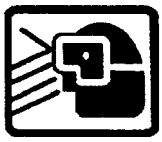


Dry cleaning sosolvent (P-D-680) is toxic and flammable. Avoid prolonged breathing of vapors. Avoid skin contact. Use only in a well-ventilated area. Keep away from open flame. Flash point of solvent is 138° F (50° C).

2. Remove grease and oil with dry cleaning solvent (item 3, Appendix E). Dry thoroughly.

c. Inspection

1. Clean mud and dirt from exposed surfaces with water and a stiff brush (item 15, Appendix E).
2. Inspect for loose, missing or damaged parts. Replace defective parts.
3. Inspect valve, elbows and connectors for cracks, dents, holes and warps. Replace defective parts.
4. Inspect for rust, corrosion and marred paint. Clean, treat, prime and paint as required.

d. Installation

NOTE

Apply teflon tape (item 12, Appendix E) to threads of air line connections before installation.

1. Install nipple (8) at rear of ratio relay valve. Install tee (6) to top of ratio relay valve.
2. Install ratio relay valve (7) by turning entire assembly clockwise.
3. Install two elbows (4) and two male connectors (5).
4. Connect eight air lines (3) in accordance with tagged identification.
5. Close all drain cocks (1) and pressurize air brake system.
6. Check for leaks (para. 4-43b).

4-46. Brake Air Chamber

This task covers:

a. Leakage test
b. Operating test (XM1063 Only)
c. Removal
d. Cleaning
e. Inspection
f. Installation

Initial Setup:

Tools/Test Equipment:
General mechanic's tool kit (item 01, Appendix B)

Equipment Conditions:
Brakes caged (para. 2-27).

Materials/Supplies:
Dry cleaning solvent (item 3, Appendix E)
Teflon tape (item 12, Appendix E)
Brush (item 15, Appendix E)
Rags (item 14, Appendix E)

a. Leakage test

1. Coat air chamber flange with soap and water solution to all air fittings and inspect for leaks.
2. If any leakage is detected, tighten securing hardware sufficiently to stop leaks. No leakage is allowable.
3. Check non-pressure side of air chamber for leaks by applying soap and water solution to holes in chamber body. If leakage exists, replace air chamber.

b. Operating test (XM1063 Only)

1. Check yoke pin adjustment (para. 4-50).
2. Dimension from outside of non-pressure side of air chamber to center of yoke pin must be 7.5 inches, plus or minus 1/8 inch.
3. If the 7.5 inch dimension cannot be obtained, replace yoke pin, air chamber or slack adjuster (para. 4-50).

4-46. Brake Air Chamber (cont'd)

c. Removal

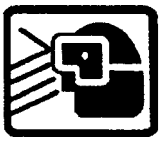

WARNING

Wear goggles when opening air reservoir drain cock. Failure to do so could result in serious eye injury from high pressure air.

NOTE

XM1063 has three air lines. M129A4 has two air lines.

1. Open drain cocks on all air reservoirs and allow air pressure to bleed off.

NOTE

Steps 2 through 4 apply to the M129A4 only.

2. Loosen locknut (1).
3. Back off slack adjuster nut (2) until it separates from slack adjuster (3).
4. Turn adjusting screw (4) counterclockwise to release tension on slack adjuster (3).

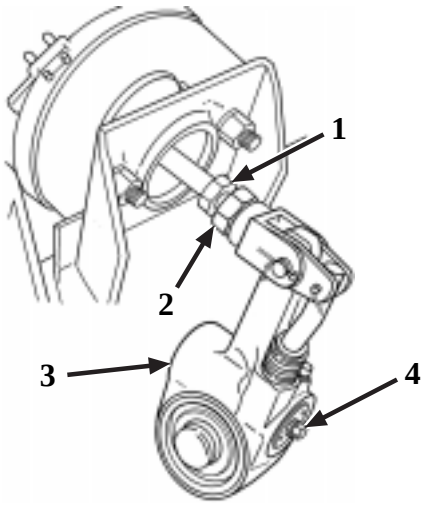

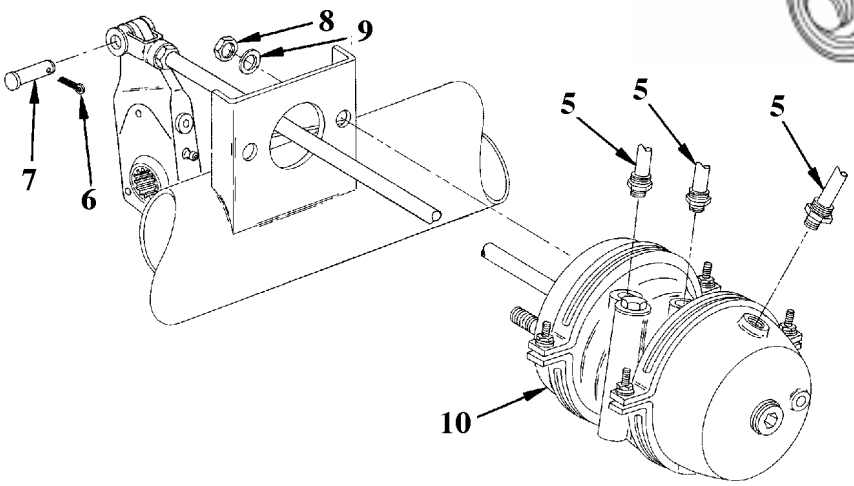

5. Tag and disconnect three air lines (5).
6. Remove cotter pin (6) and yoke pin (7).
7. Remove two nuts (8) and washers (9) and air chamber (10).

d. Cleaning

1. Clean mud and dirt from exposed surfaces with water and a stiff brush (item 15, Appendix E).

4-46. Brake Air Chamber (cont'd)

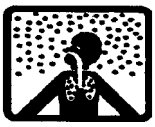


WARNING

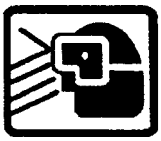


Dry cleaning solvent (P-D-680) is toxic and flammable. Avoid prolonged breathing of vapors. Avoid skin contact. Use only in a well-ventilated area. Keep away from open flame. Flash point of solvent is 138° F (50° C).

2. Remove grease and oil with dry cleaning solvent (item 3, Appendix E) using a soft cloth (item 14, Appendix E).

e. Inspection

1. Inspect for loose, missing or damaged parts.
2. Inspect air chamber for cracks, dents, holes and warps.
3. Inspect for rust, corrosion and marred paint. Clean, treat, prime and paint as required.
4. Replace defective parts.

f. Installation

WARNING

If installing a new brake air chamber, make sure it is caged prior to installation. Failure to do so could result in serious injury to personnel or damage to equipment.

NOTE

Apply teflon tape (item 12, Appendix E) to threads of air line connections before installation.

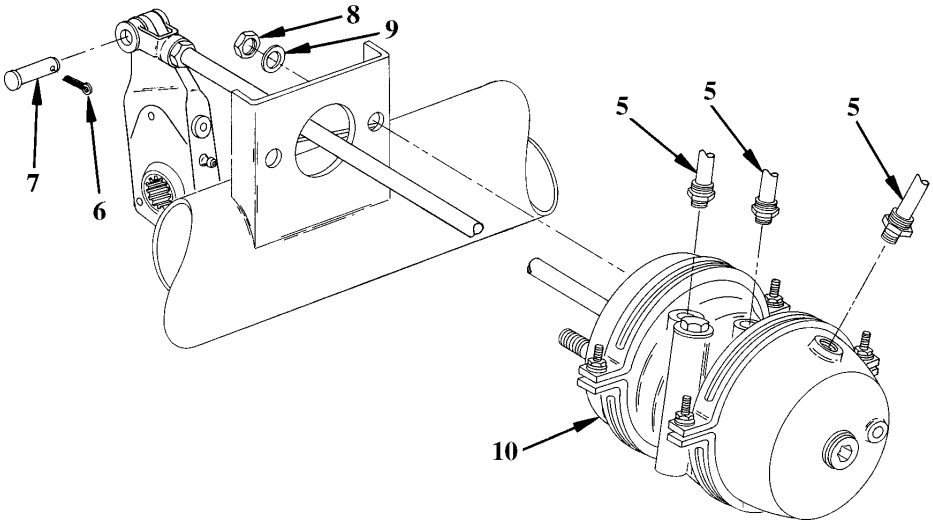

1. Position air chamber (10) and secure with two nuts (8) and washers (9).
2. Position yoke pin (7) and secure with cotter pin (6).

4-46. Brake Air Chamber (cont'd

3. Connect air lines (5) (three air lines on XM1063 or two air lines on M129A4).
4. Connect and adjust slack adjuster (para. 4-50 (XM1063) or 4-51 (M129A4)).
5. Close all drain cocks (1) and pressurize air brake system.
6. Check for leaks (para. 4-46a).
7. XM1063 only: Check yoke pin adjustment (para. 4-46b).

Follow-on maintenance:

- Uncage brakes (para. 2-27)

4-47. Air Reservoir

This task covers:

a. Leakage test
b. Removal
c. Cleaning
d. Inspection
e. Installation
f. Drain cock leakage test
g. Drain cock removal
h. Drain cock cleaning
i. Drain cock inspection
j. Drain cock installation

Initial Setup:

Tools/Test Equipment:
General mechanic's tool kit (item 01, Appendix B)

Equipment Conditions:
Towing vehicle attached and air brake system charged.

Materials/Supplies:
Dry cleaning solvent (item 3, Appendix E)
Teflon tape (item 12, Appendix E)
Brush (items 15, Appendix E)
Rags (item 14, Appendix E)

a. Leakage test

1. With brake system charged, coat drain cock, air connections and outside of air reservoir with soap and water solution. Check for leaks. No leakage is allowable.
2. Tighten any leaking connections.
3. Replace reservoir if it leaks or if any damage or corrosion is found that would weaken reservoir.

4-47. Air Reservoir (cont'd)

b. Removal

WARNING

Wear goggles when opening air reservoir drain cock. Failure to do so could result in serious eye injury from high pressure air.

1. Open drain cocks on all air reservoirs and allow air pressure to bleed off.
2. If front reservoir is being removed, remove relay valve (para. 4-43). Remove ratio relay valve (para. 4-45).
3. If rear reservoir is being removed, remove relay valve (para. 4-44). Remove male elbow (3) and bushing (4).
4. XM1063 only: If reserve reservoir is being removed, remove male branch tee (5) and bushing (4).
5. Remove four nuts (6), washers (7) and screws (8) securing air reservoir (2).
6. Remove air reservoir (2).

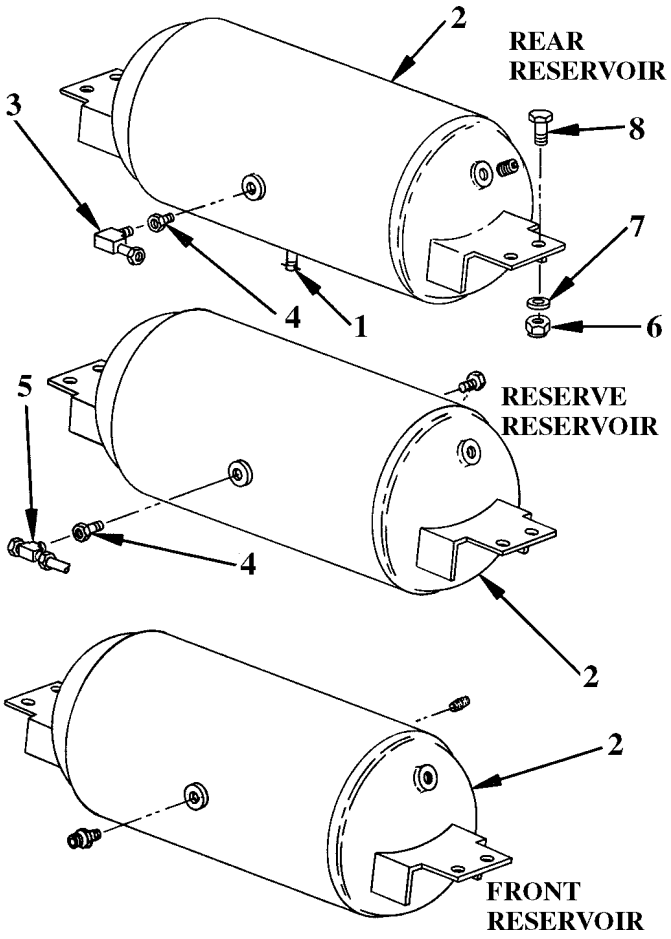

c. Cleaning

CAUTION

To prevent contamination of air system components, take care to keep water from entering reservoirs.

1. Clean mud and dirt from exposed surfaces with water and brush (item 15, Appendix E).

4-47. Air Reservoir (cont'd)

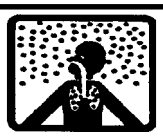


WARNING

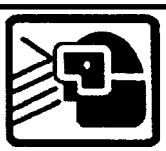


Dry cleaning solvent (P-D-680) is toxic and flammable. Avoid prolonged breathing of vapors. Avoid skin contact. Use only in a well-ventilated area. Keep away from open flame. Flash point of solvent is 138° F (50° C).

2. Remove grease and oil with dry cleaning solvent (item 3, Appendix E) and a clean soft rag (item 14, Appendix E).

d. Inspection

1. Inspect for loose, missing or damaged parts.
2. Inspect air reservoir for cracks, dents, holes and bulges.
3. Inspect mounting brackets for cracks, warps and broken welds.
4. Inspect for rust and corrosion. Clean, treat, prime and paint as required.
5. Replace defective parts.

e. Installation

NOTE

Apply teflon tape (item 12, Appendix E) to threads of air line connections before installation.

1. Position air reservoir (2) and secure with four screws (8), washers (7) and nuts (6).
2. If rear reservoir was removed, install rear relay valve (para. 4-44).
3. If front reservoir was removed, install front relay valve on front of air reservoir (para. 4-43). Install ratio relay valve on rear of front air reservoir (para. 4-45).
4. XM1063 only: If reserve reservoir was removed, install bushing (4) and male branch tee (5).
5. Close all drain cocks and pressurize air brake system.
6. Check for leaks.

f. Drain cock leakage test

1. With brake system charged, coat drain cock with soap and water solution.
2. Leaks in excess of a three inch bubble in three seconds are not allowed.

4-47. Air Reservoir (cont'd)

3. Leakage due to dirt accumulation can be corrected by cleaning and applying teflon tape (item 12, Appendix E) on the drain cock threads before assembly.
4. Leakage due to a damaged part requires replacement of the drain cock.

g. Drain cock removal

WARNING

Wear goggles when opening air reservoir drain cock. Failure to do so could result in serious eye injury from high air pressure.

1. Open drain cock to release air from reservoirs.
2. Remove drain cock by turning it counterclockwise.

h. Drain cock cleaning


WARNING

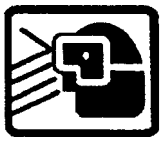


Dry cleaning sosolvent (P-D-680) is toxic and flammable. Avoid prolonged breathing of vapors. Avoid skin contact. Use only in a well-ventilated area. Keep away from open flame. Flash point of solvent is 138° F (50° C).

Clean with dry cleaning solvent (item 3, Appendix E).

i. Drain cock Inspection

1. Inspect for damage or excessive wear.
2. Replace defective drain cock.

j. Drain cock Installation

1. Apply teflon tape (item 12, Appendix E) to drain cock threads.

CAUTION

Take care not to damage drain cock during installation.

2. Place drain cock in position and secure by turning clockwise.

4-48. Gladhand (Air Half-Coupling)

This task covers:

a. Removal
b. Cleaning
c. Inspection and replacement
d. Packing ring installation
e. Installation

Initial Setup:

Tools/Test Equipment:
General mechanic's tool kit (item 01, Appendix B)

Equipment Conditions:
Brakes caged (para. 2-27)

Materials/Supplies:
Packing ring
Dry cleaning solvent (item 3, Appendix E)
Rag (item 14, Appendix E)

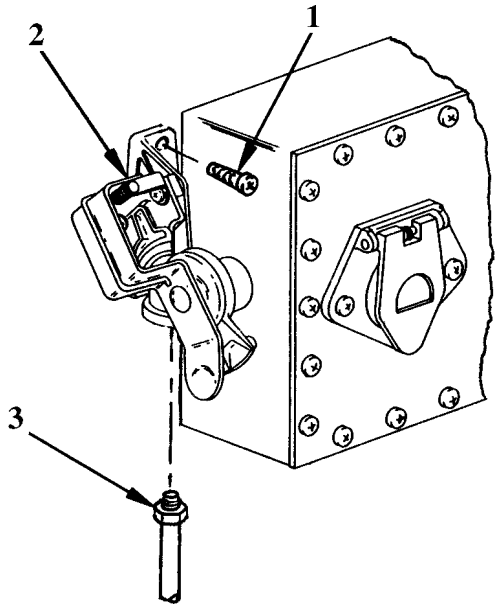

a. Removal

1. Unscrew air line nut (3).
2. Remove two screws (1) securing gladhand to body. Rem gladhand.

b. Cleaning

1. Clean mud and dirt from all exposed surfaces with water and a brush (item 15, Appendix E).

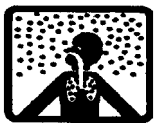

WARNING
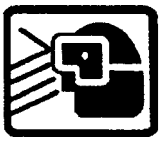


Dry cleaning so solvent (P-D-680) is toxic and flammable. Avoid prolonged breathing of vapors. Avoid skin contact. Use only in a well-ventilated area. Keep away from open flame. Flash point of solvent is 138° F (50° C).

2. Remove grease with dry cleaning solvent (item 3, Appendix E) and a clean rag (item 14, Appendix E).

4-48. Gladhand (Air-Coupling) (cont'd)

c. Inspection and replacement

1. Inspect gladhand body for damaged threads, cracks, dents, holes and warps.
2. Replace defective gladhand.
3. Pry out packing ring (4) and check for wear and deterioratic
4. Replace defective packing ring.

d. Packing ring installation

1. Clean packing ring groove in gladhand.
2. Partially collapse ring with fingers and insert one side of ring flange into groove.
3. Push ring into place. Face of ring must lie flat, with no twist or bulge.

e. Installation

1. Position gladhand and secure to body with two screws (1).
2. Secure air line to gladhand (2) with air line nut (3).

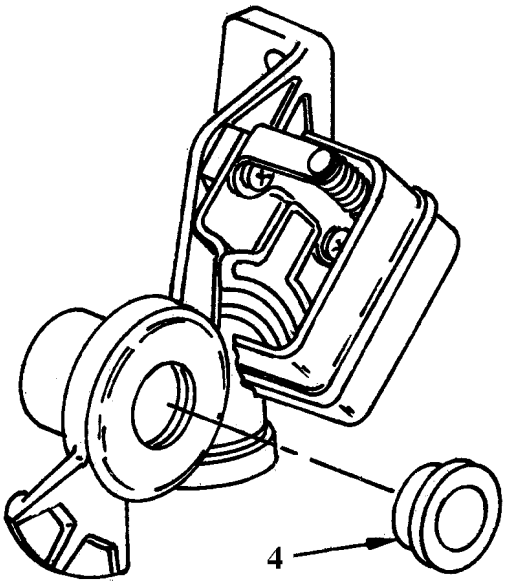

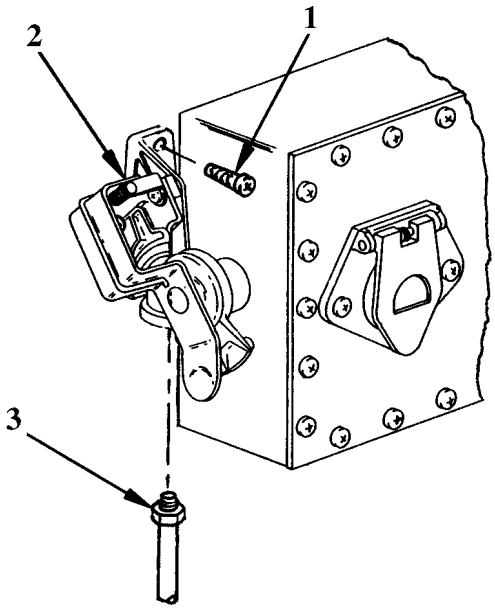

4-49. Hose, Tubing and Fittings

This task covers:

a. Serviceability test
b. Removal
c. Tube fitting removal
d. Tube fitting installation
e. Tubing Installation
f. Splicing nonmetallic tubing

Initial Setup:

Tools/Test Equipment:
General mechanic's tool kit (item 01, Appendix B)

Equipment Conditions:
Brakes caged (para. 2-27)

Materials/Supplies:

a. Serviceability test

1. Connect intervehicular air hose and apply brakes.
2. Coat air tubing couplings, connectors and fittings with soap and water solution. No leakage is allowed.
3. Tighten fittings as required. No leakage is allowed.

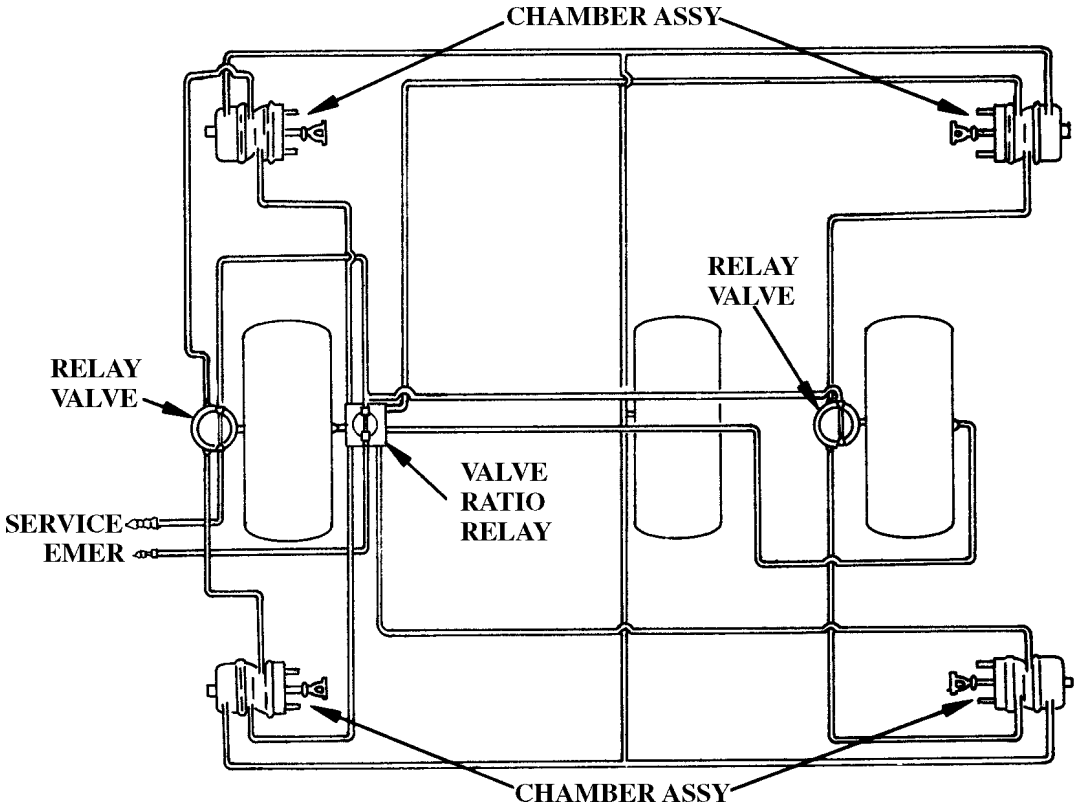

4-49. Hose, Tubing and Fittings (cont'd)

b. Removal

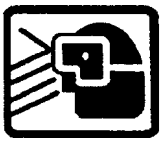

WARNING

Wear goggles when opening air reservoir drain cock. Failure to do so could result in serious eye injury from high pressure air.

NOTE

XM1063 has three drain cocks. M129A4 has two drain cocks.

1. Open all air reservoir drain cocks.
2. Disconnect air tubing (3) at both ends. Remove any attaching clamps (1) by removing screw (2).
3. Remove tubing (3).

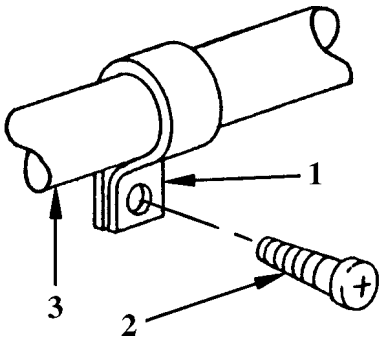

c. Tube fitting removal

1. Unscrew tube nut (4) from tube fitting (5).

NOTE

Serviceable tube fittings and tube nuts may be reused, but compression sleeves (6) must be replaced.

2. Remove compression sleeves (6). Discard compression sleeves (6).

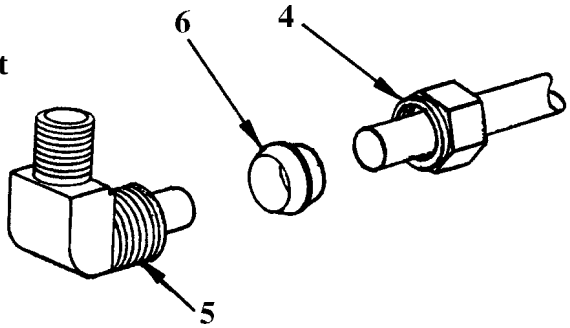

d. Tube fitting installation

1. Cut tubing. Make sure end is smooth and nut squarely with tubing wall. Do not crimp or partially close ends.
2. Place nut (4) and new compression sleeve (6) on tube. Insert end of tube into recess in fitting body (5).
3. Hold tube at bottom of recess and tighten tube nut (4) until sufficient pressure is placed on compression sleeve (6) to prevent leakage. Do not cross thread.

e. Tubing installation

1. Position tubing (3) and secure long lengths with screws (2) and clamps (1).
2. Connect tubing.
3. Close drain cock and check for leaks.

4-49. Hose, Tubing and Fittings (cont'd)

f. Splicing Nonmetallic Tubing

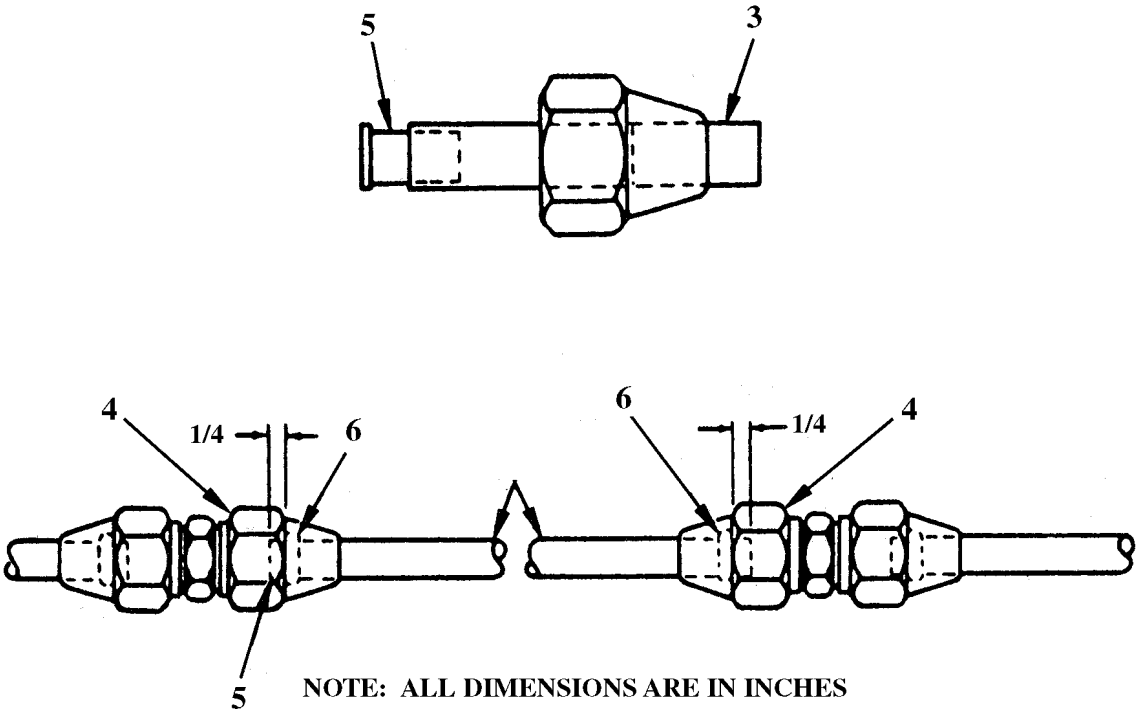

1. Cut required length of tubing to replace damaged portion.
2. Install nut (4), compression sleeve (6) and insert (5) on both ends of tubing and splice as shown.

Section VIII. Axle/Brake Assembly Maintenance Procedures

4-50. Slack Adjuster (XM1063 Only)

This task covers:

a. Removal
b. Cleaning
c. Inspection
d. Installation
e. Adjustment

Initial Setup

Tools/Test Equipment:
General mechanic's tool kit (item 01, Appendix B)

Equipment Conditions:
Brakes caged (para. 2-27)

Materials/Supplies:
Dry cleaning solvent (item 3, Appendix E)
Brush (item 15, Appendix E)

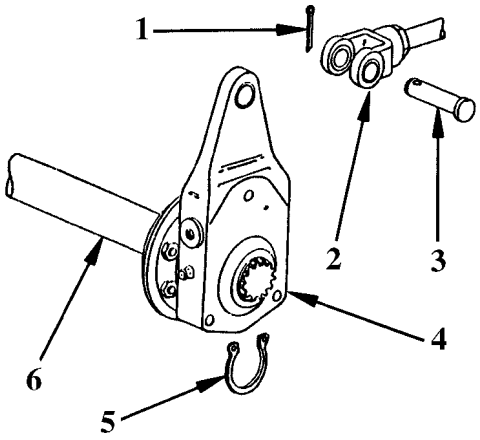

a. Removal

1. Remove cotter pin (1) securing yoke (2) and yoke pin (3). Remove yoke pin (3).
2. Remove retaining ring (5) from end of camshaft (6).
3. Using a brass hammer, lightly tap slack adjuster (4) until it co off the camshaft.

b. Cleaning

1. Remove surface dirt with water and brush (item 3, Appendix E).

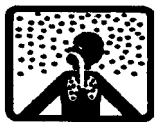


WARNING

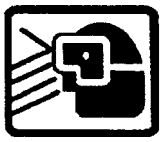


Dry cleaning sosolvent (P-D-680) is toxic and flammable. Avoid prolonged breathing of vapors. Avoid skin contact. Use only in a well-ventilated area. Keep away from open flame. Flash point of solvent is 138° F (50° C).

2. Remove grease and oil with dry cleaning solvent (item 3, Appendix E). Dry thoroughly.

4-50. Slack Adjuster (XM1063 Only) (cont'd)

c. Inspection

1. Inspect for damage and condition of splines. Replace defective or missing parts.
2. Inspect for rust, corrosion or marred finish. Repaint as required.

d. Installation

1. Clean splines of camshaft (6).
2. Place slack adjuster (4) in position and tap into place, using a brass hammer.
3. Install retaining ring (5).
4. Install yoke (2), yoke pin (3) and cotter pin (1).

e. Adjustment

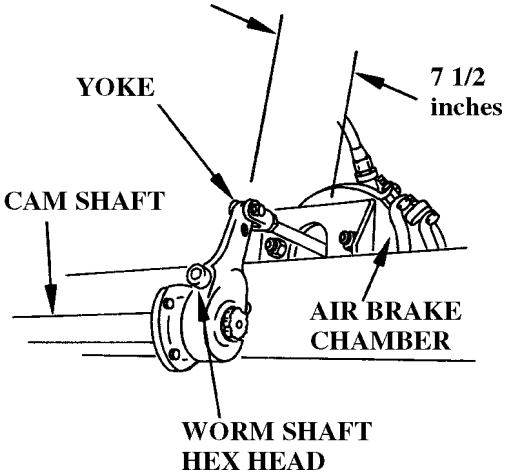

1. Make certain brakes are still caged.
2. Jack up axle to be adjusted. Check that wheels rotate freely.
3. Check yoke adjustment. Dimension from outside of non-pressure housing to center of yoke pin must be 7-1/2 inches, plus or minus 1/8 inch.
4. Apply a 9/16 wrench to worm shaft hex head and push in against slack adjuster to unlock the worm shaft.
5. Turn the hex head of the worm shaft clockwise on slack adjuster until the wheel cannot be turned.
6. Back off the worm shaft until wheel spins freely.
7. Remove jack.
8. Repeat steps 1 through 7 for other slack adjusters as required.

Follow-on maintenance:

- Uncage brakes (para. 2-27).

4-51. Slack Adjuster (M129A4 Only)

This task covers:

a. Removal
b. Cleaning
c. Inspection
d. Installation
e. Adjustment

Initial Setup:

Tools/Test Equipment:
General mechanic's tool kit (item 01, Appendix B)
Clevis installation gage (Appendix G)
Snap ring pliers (item 1, Appendix B)
Measuring device (up to 12 in)

Equipment Conditions:
Brakes caged (para. 2-27).
Dust cover removed.

Materials/Supplies:
Dry cleaning solvent (item 3, Appendix E)
Brush (item 15, Appendix E)
Enamel (item 20, Appendix E)

WARNING

To avoid injury to personnel or damage to equipment, make sure brakes are caged prior to performing maintenance on slack adjusters.

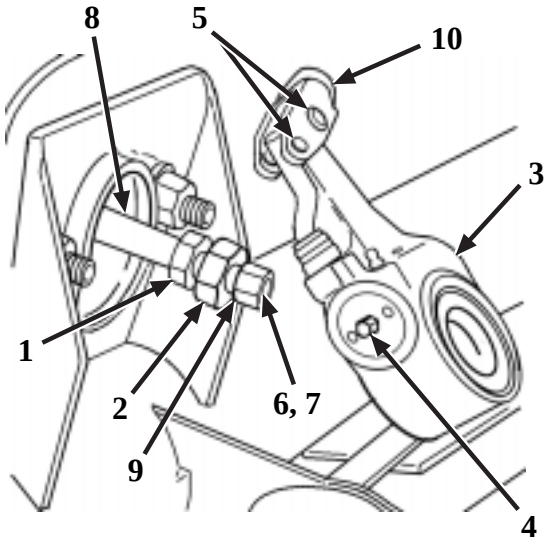

a. Removal

1. Loosen locknut (1).
2. Back off slack adjuster nut (2) until it separates from slack adjuster (3).
3. Turn adjusting screw (4) counterclockwise to release tension on slack adjuster (3).
4. Remove clevis pins (5).
5. Using snap ring pliers, remove snap ring (6) and flat washer (7) from air chamber shaft (8).
6. Slide slack adjuster (3) off air chamber shaft (8).

NOTE

Inner nut (9) may slide off air chamber shaft (8) when slack adjuster (3) is removed. If this happens, slide inner nut (9) on air chamber shaft (8).

7. Remove slack adjuster nut (2).

4-51. Slack Adjuster (M129A4 Only) (cont'd)

b. Cleaning

1. Remove surface dirt with water and brush (item 3, Appendix E).

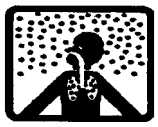


WARNING

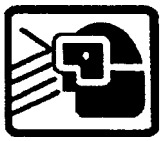


Dry cleaning solvent (P-D-680) is toxic and flammable. Avoid prolonged breathing of vapors. Avoid skin contact. Use only in a well-ventilated area. Keep away from open flame. Flash point of solvent is 138° F (50° C).

2. Remove grease and oil with dry cleaning solvent (item 3, Appendix E). Dry thoroughly.
3. Lubricate in accordance with Appendix I, Lubrication Instructions.

c. Inspection

1. Inspect for damage and condition of splines. Replace defective or missing parts.
2. Inspect for rust, corrosion or marred finish. Repaint as required (item 20, Appendix E).

d. Installation

1. Set locknut (1) 5-1/4 inches (13.34 cm) from air chamber.

NOTE

Slack adjuster nut (2) and inner nut (9) are installed on new slack adjuster. They must be removed prior to the installation of the new slack adjuster.

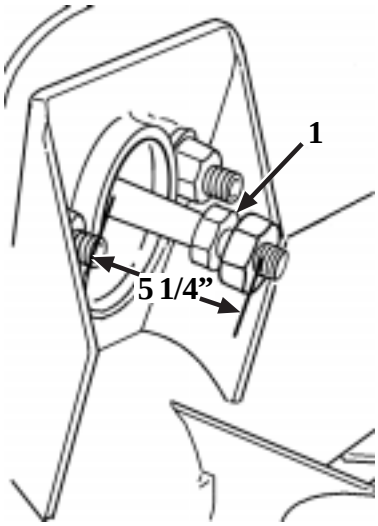

2. Slide slack adjuster nut (2) and inner nut (9) onto air chamber shaft (8) until they meet locknut (1).
3. Install slack adjuster (3) onto air chamber shaft (8).
4. Install flat washer (7) and snap ring (6).

NOTE

Turn adjusting screw (4) clockwise to align clevis (10) and air chamber shaft (8).

5. Using adjusting screw (4), align clevis (10) and air chamber shaft (8).
6. Turn slack adjuster nut (2) counterclockwise until hand tight.
7. Tighten locknut (1).

4-51. Slack Adjuster (M129A4 Only) (cont'd)

e. Adjustment

NOTE

M129A4 slack adjusters are self-adjusting. Use this procedure when installing new slack adjusters or when slack adjusters have been disconnected.

Fabricate clevis installation gage using template in Appendix G.

1. Place clevis installation gage (11) so it fits over pin body in air chamber shaft (8).
2. If slack adjuster is properly adjusted, a pencil can be placed into the center of the air chamber shaft and 6.0 hole in gage.

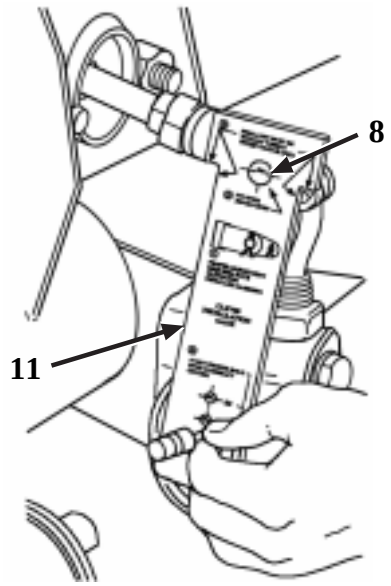

NOTE

If measurement is more than 6.0, move inner nut up air chamber shaft. If measurement is less than 6.0, move inner nut down air chamber shaft.

3. If proper measurement is not present, remove slack adjuster and adjust inner nut as required.
4. Lubricate in accordance with Appendix I, Lubrication Instructions.

WARNING

Ensure brake drum moves freely after completing step 5 (backing off adjusting screw (4) 3/4 turn). Brake drum should move freely. Failure to do so could result in damage to equipment and serious injury to personnel.

5. Turn adjusting screw (4) clockwise until brake drum does not move. Back off adjusting screw (4) 3/4 turn. Brake drum should move freely.

Follow-on maintenance:

- Install dust cover.
- Uncage brakes (para. 2-27).

4-52. Hub and Drum Assembly (XM1063 Only)

This task covers:

a. Removal
b. Cleaning and inspection
c. Installation and adjustment of wheel bearings

Initial Setup:

Tools/Test Equipment:
General mechanic's tool kit (item 01, Appendix B)
Automotive shop set (item 2, Appendix B)
Wheel bearing wrench (item 3, Appendix B)

Equipment Conditions:
Wheels removed (para. 3-4).
Brakes caged (para. 2-27).
Jack stand in place under axle.

Materials/Supplies:
Dry cleaning solvent (item 3, Appendix E)

Brush (item 15, Appendix E)

Grease (item 5, Appendix E)

a. Removal

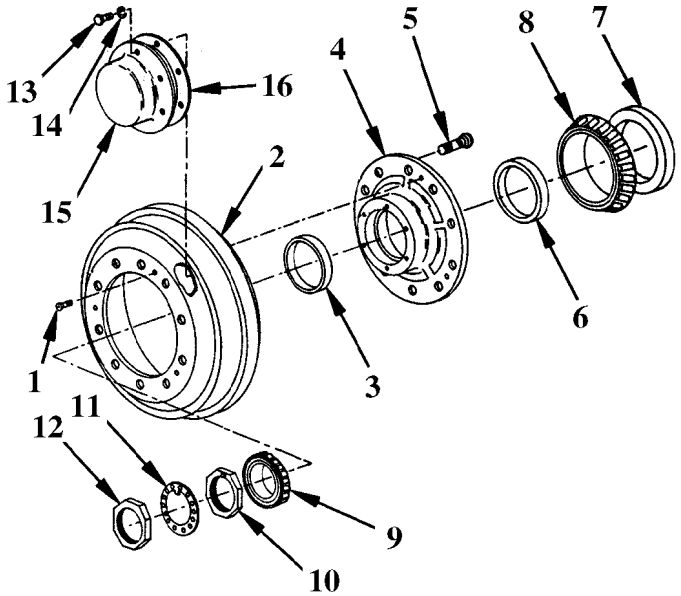

1. Remove three screws (1) and brake drum (2).
2. Remove six screws (13), washers (14), hub cap (15) and gasket (16). Discard gasket.
3. Remove 3-1/4 inch outer bearing nut (12), keyed washer (11) and 3-7/8 inch inner nut (10).
4. Remove outer bearing cone (9) and hub (4).
5. Remove oil seal (7), inner bearing cone (8), inner bearing cup (6) and outer bearing cup (3).
6. Remove serrated bolts (5), if defective.

4-52. Hub and Drum Assembly (XM1063 Only) (cont'd)

b. Cleaning and inspection

1. Remove surface dirt with water and brush (item 15, Appendix E).

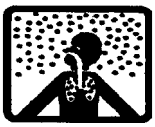


WARNING

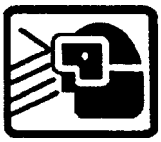


Dry cleaning solvent (PD-680) is toxic and flammable. Avoid prolonged breathing of vapors. Avoid skin contact. Use only in a well-ventilated area. Keep away from open flame. Flash point of solvent is 138° F (50° C).

2. Remove grease and oil with dry cleaning solvent (item 3, Appendix E). Dry thoroughly.
3. Inspect for damage, rust, corrosion or marred finish.
4. Inspect brake drum for out-of-roundness and scoring.
5. Inspect bearings (refer to TM 9-214).
6. Make sure contact material on oil seals is intact and pliable.

c. Installation and adjustment of wheel bearings

NOTE

Do step 1 if inner bearing cup (6) and outer bearing cup (3) were removed.

1. Install inner bearing cup (6) and outer bearing cup (3) into hub (4).

NOTE

Do step 2 if serrated bolts (5) were replaced.

2. Install serrated bolts (5).
3. Pack inner bearing (8) with grease (item 5, Appendix E). Install hub (4) with large outside diameter of bearing toward oil seal.
4. Install new oil seal (7) in hub, with lip of seal next to bearing.

CAUTION

To avoid damage to oil seal (7), use caution when sliding hub (4) onto axle spindle.

5. Slide hub (4) on axle spindle.
6. Pack outer bearing (9) with grease (item 5, Appendix E). Insert into hub (4) with large diameter of bearing (9) facing out.
7. Install inner nut (10), using 3-7/8 inch wheel bearing locknut wrench.

4-52. Hub and Drum Assembly (XM1063 Only) (cont'd)

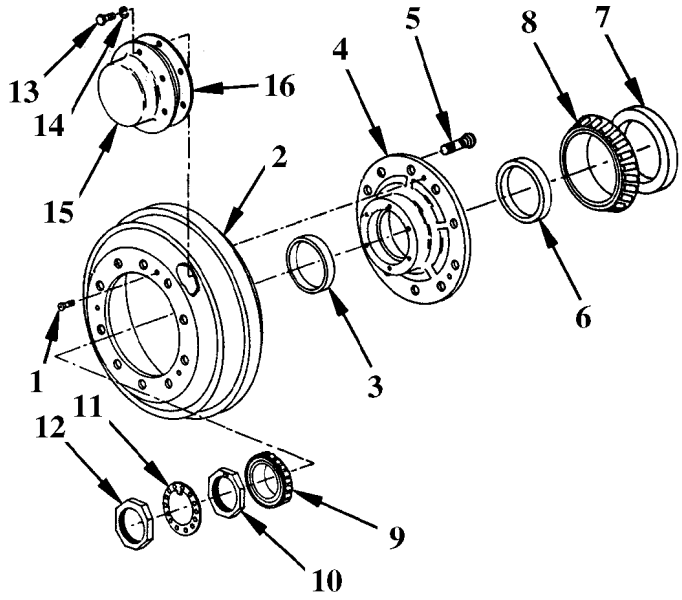

8. While turning hub slowly, tighten inner nut (10), using 3-7/8 inch wheel bearing locknut wrench, to a torque of approximately 100 lb-ft (135.6 Nm). Back off inner nut (10) 1/8 turn.
9. Check adjustment by trying to rock hub on spindle. If bearings are properly adjusted, lateral movement of brake drum will not be visible and brake drum will move freely. If movement is excessive, repeat steps 8 and 9.
10. Install keyed washer (11). If necessary, back off inner nut (10) so that alignment pin on inner nut mates into closest hole in keyed washer (11).
11. Install outer nut (12), using 3-1/4 inch wheel bearing locknut wrench, drawing it up tightly against keyed washer (11). Torque outer nut (12) to 200-300 lb-ft (147.6-221.4 Nm).
12. Install new cap gasket (16).
13. Position hub cap (15) and secure with six screws (13) and washers (14).
14. Position brake drum (2) and align holes in drum with holes in hub (4). Secure hub (4) with three screws (1).

Follow-on maintenance:

- Install wheels (para. 3-4).
- Uncage brakes (para. 2-27).
- Remove jack stand.

4-53. Hub and Drum Assembly (M129A4 Only)

This task covers:

a. Removal
b. Cleaning and inspection
c. Installation
d. Adjustment

Initial Setup:

Tools/Test Equipment:
General mechanic's tool kit (item 01, Appendix B)
Guard press (item 04, Appendix B)
Automotive shop set (item 2, Appendix B)
Wheel bearing wrench (item 3, Appendix B)

Equipment Conditions:
Wheels removed (para. 3-4).
Brakes caged (para. 2-27).
Jack stand in place under axle.

Materials/Supplies:
Lock washer (6)
Gasket
Gravel guard
Dry cleaning solvent (item 3, Appendix E)
Grease (item 5, Appendix E)
Brush (item 15, Appendix E)

a. Removal

NOTE

Steps 1 and 2 apply to left front hub and drum only. Do step 2 if hubometer or bracket is damaged and must be replaced.

1. Remove two screws (1), lock washers (2) and bracket (3) with hubometer (4). Discard lock washers.
2. Remove screw (5), washers (6) and hubometer (4) from bracket (3).

NOTE

Two screws (1) and lock washers (2) on left front hub were removed in step 1.

3. Remove six screws (1), lockwashers (2) hub cap (7) and cap gasket (8). Discard lockwashers and gasket.
4. Remove 10 flange nuts (9) and brake drum (10).
5. Bend tabs on tabbed washer (11) and remove 3-1/4 inch outer bearing nut (12), tabbed washer (11), keyed washer (13) and 3-7/8 inch inner nut (14).

CAUTION

DO NOT remove studs (16) from hub unless stud(s) is damaged.

6. Remove hub (15) with studs (16).

4-53. Hub and Drum Assembly (M129A4 Only) (cont'd)

NOTE

Do steps 5 and 6 if bearing sets (17 and 19) and/or seal (18) are damaged and must be replaced.

7. Remove outer bearing set. (17).
8. Remove oil seal (18) and inner bearing (19).
9. Remove gravel guard (20). Discard gravel guard.

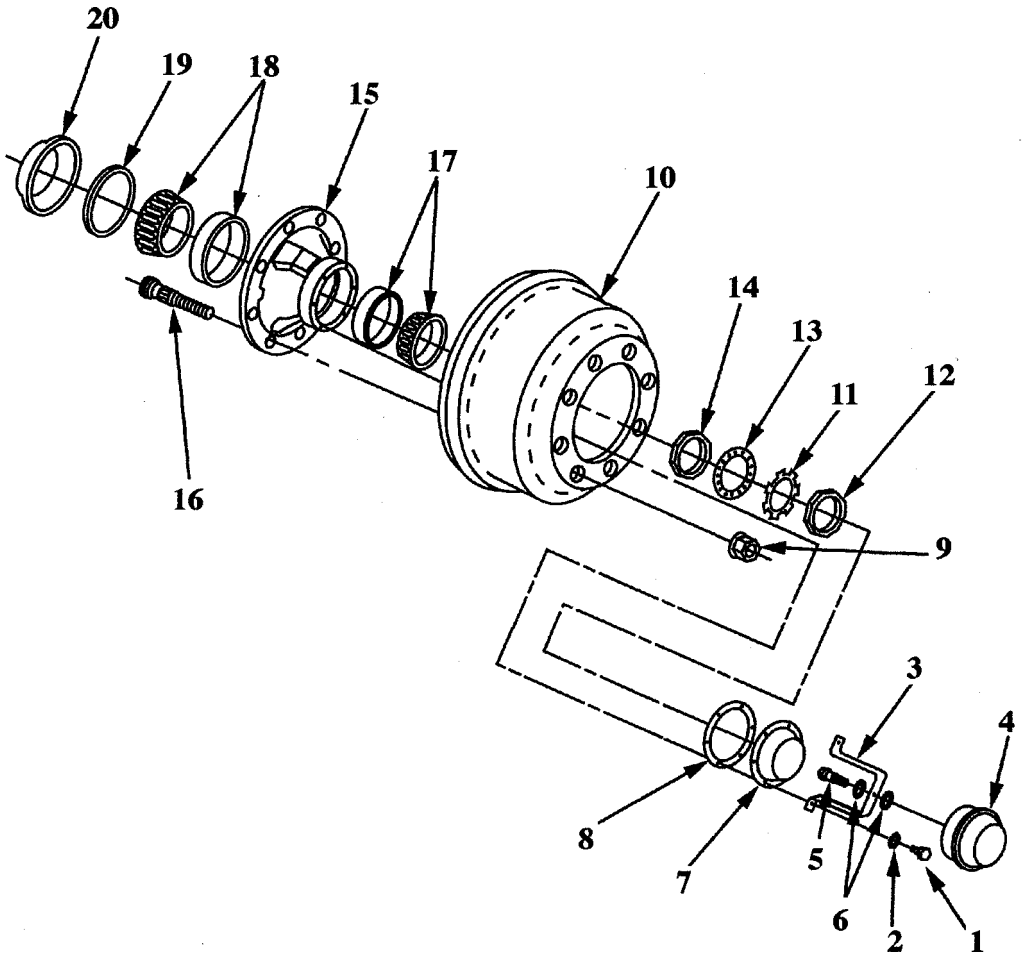

b. Cleaning and Inspection

1. Remove surface dirt with water and brush (item 15, Appendix E).

4-53. Hub and Drum Assembly (M129A4 Only) (cont'd)

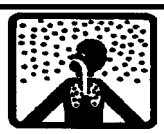


WARNING

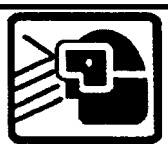


Dry cleaning solvent (P-D-680) is toxic and flammable. Avoid prolonged breathing of vapors. Avoid skin contact. Use only in a well-ventilated area. Keep away from open flame. Flash point of solvent is 138° F (50° C).

2. Remove grease and oil with dry cleaning solvent (item 3, Appendix E). Dry thoroughly.
3. Inspect for damage, rust, corrosion or marred finish.
4. Inspect brake drum for out-of-roundness and scoring.
5. Inspect bearings (refer to TM 9-214).
6. Inspect cones for cracks, wear or other damage. Replace defective parts.
7. Make sure contact material on oil seals is intact and pliable.

c. Installation and adjustment of wheel bearings

NOTE

Do steps 1 and 2 if bearing (17 and 19) and seal (18) were removed.

1. Pack inner bearing (19) with grease (item 5, Appendix E). Insert into hub (15) with large outside diameter of bearing toward oil seal.
2. Install new oil seal (18) in hub (15), with lip of seal next to bearing.
3. Using guard press, install new gravel guard (20).

CAUTION

To avoid damage to oil seal, use caution when sliding hub (15) onto axle spindle.

4. Slide hub (15) with studs (16) on axle spindle.
5. Pack outer bearing (17) with grease (item 5, Appendix E). Insert into hub (15) with large diameter of bearing facing out.
6. Install inner nut (14), using 3-7/8 inch wheel bearing locknut wrench.
7. While turning hub slowly, tighten inner nut (14), using 3-7/8 inch wheel bearing locknut wrench, to a torque of approximately 200 lb-ft (271.2 Nm). Back off inner nut (10) 1/4 turn.

4-53. Hub and Drum Assembly (M129A4 Only) (cont'd)

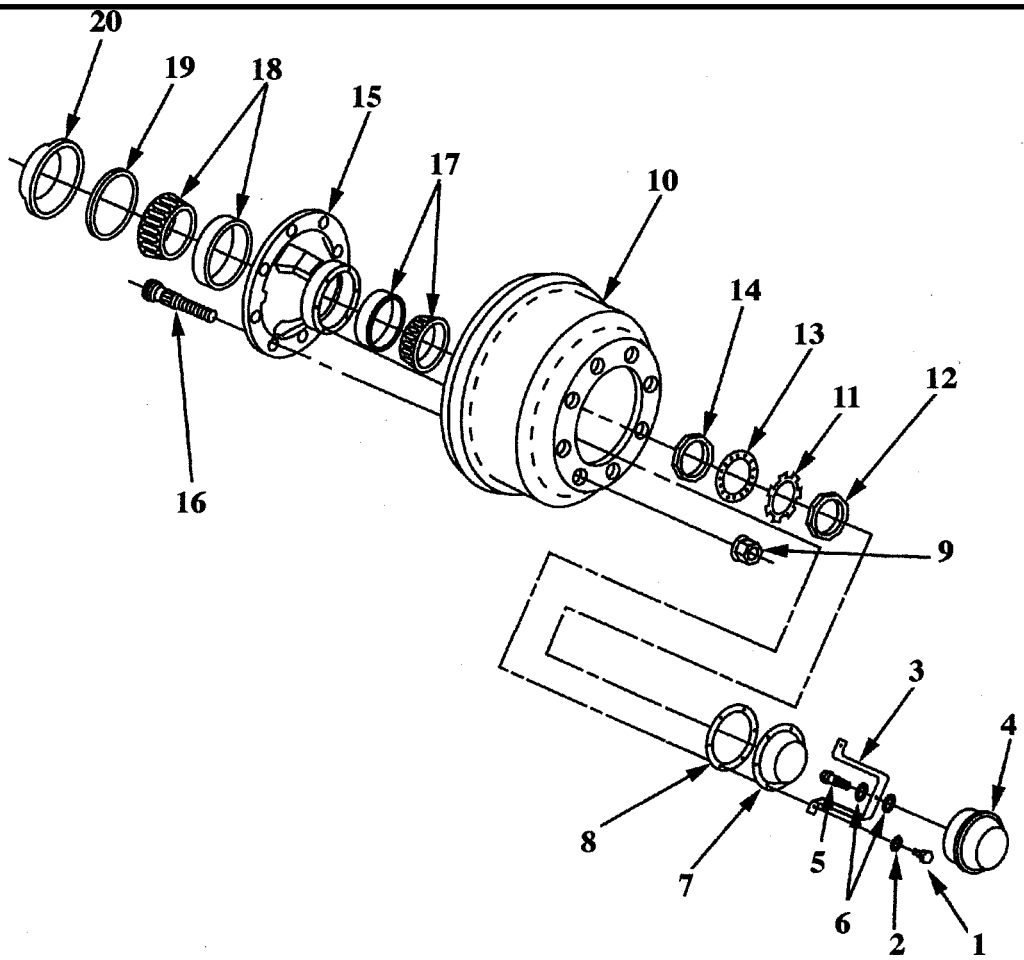

8. Check adjustment by trying to rock hub on spindle. If bearings are properly adjusted, lateral movement of brake drum will not be visible and brake drum will move freely. If movement is excessive, repeat steps 6 and 7.

9. Install keyed washer (13). If necessary, back off inner nut (14) so that alignment pin on inner nut mates into closest hole in keyed washer (13).

10. Install tabbed washer (11).

11. Install outer bearing nut (12), using 3-1/4 inch wheel bearing locknut wrench, drawing it up tightly against keyed washer (13). Torque outer bearing nut (12) to 200-300 lb-ft (147.6-221.4 Nm).

CAUTION

A minimum of two tabs must be bent down on tabbed washer (11).

12. Bend down two tabs on tabbed washer (11).

13. Position brake drum (10) and align holes in drum with holes in hub (15). Install 10 flange nuts (9).

4-53. Hub and Drum Assembly (M129A4 Only) (cont'd)

14. Install new cap gasket (8).

NOTE

Go to step 16 to install hub cap (7) and hubometer (4) on left front hub and drum.

15. Position hub cap (7) and secure with six screws (1) and new lockwashers (2).
16. If removed, install screw (5), two washers (6) and hubometer (4) on bracket (3).
17. Position hub cap (7) and bracket (3) with hubometer (4) and secure with six screws (1) and new lock washers (2)

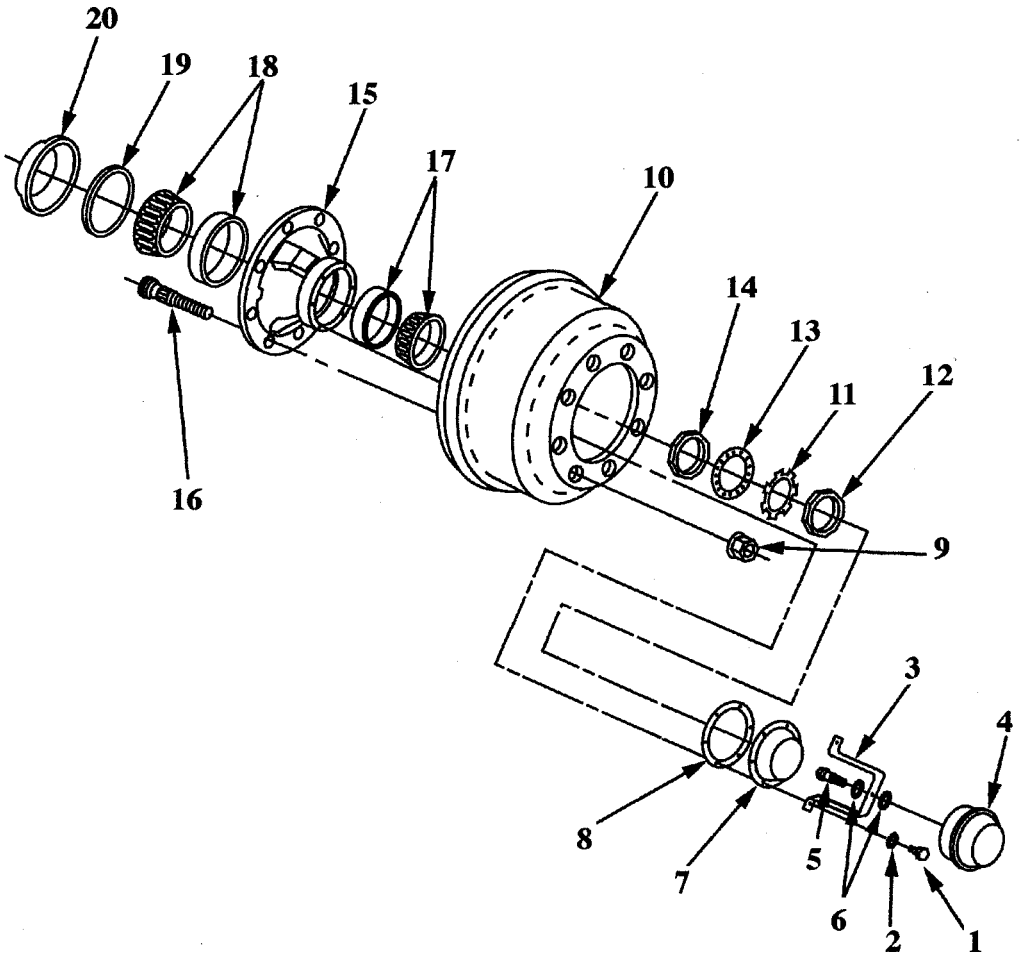

Follow-on maintenance:

- Install wheels (para. 3-4).
- Uncage brakes (para. 2-27).
- Remove jack stand.

4-54. Brake Camshaft

This task covers:

a. Removal
b. Cleaning and inspection
c. Installation

Initial Setup:

Tools/Test Equipment:

General mechanic's tool kit (item 01, Appendix B)
Automotive shop set (item 2, Appendix B)

Materials/ Supplies:

Dry cleaning solvent (item 3, Appendix E)
Brush (item 15, Appendix E)

Equipment Conditions:

Jack stand under axle.
Hub and drum assembly removed (para. 4-52 (XM1063) or para. 4-53 (M129A4)).
Brake shoes removed (para. 4-55)
Slack adjusters removed (para. 4-50 (XM1063) or para. 4-51 (M129A4).

a. Removal

WARNING

To prevent injury to personnel, place jack stand or blocking under axle.

CAUTION

Make sure not to damage machined surface of camshaft when removing retaining ring. Equipment failure could result.

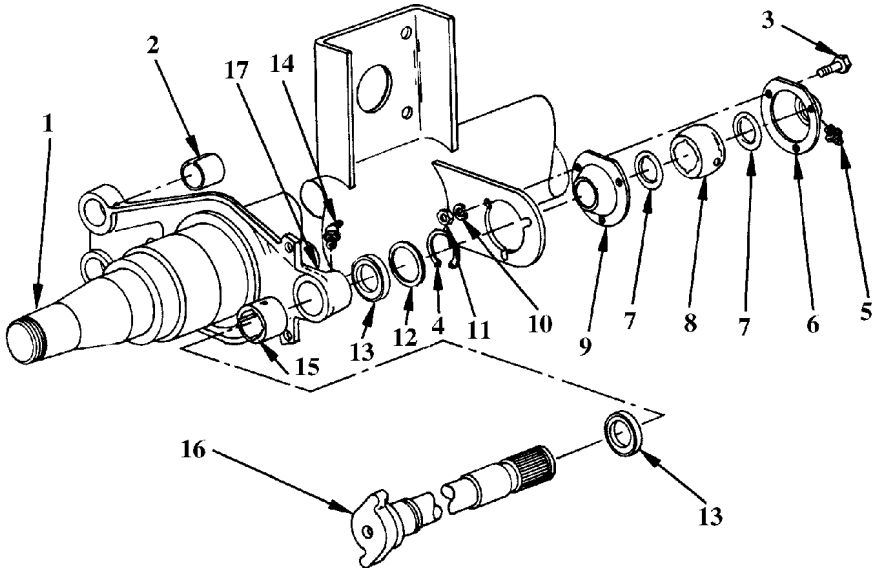

1. Expand retaining ring (4) and slide camshaft (16) and spacer (12) out of spider (17) (part of axle (1)).
2. Remove two seals (13). Remove bushing (15) and bushing (2), if required.

4-54. Brake Camshaft (cont'd)

3. Remove three nuts (11), washers (10) and screws (3).
4. Remove housing (6 and 9), preformed packing (7) and bushing (8).

b. Cleaning and inspection

1. Remove dirt and mud with water and brush (item 15, Appendix E).

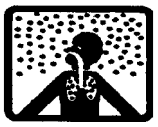


WARNING

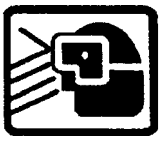


Dry cleaning solvent (P-D-680) is toxic and flammable. Avoid prolonged breathing of vapors. Avoid skin contact. Use only in a well-ventilated area. Keep away from open flame. Flash point of solvent is 138° F (50° C).

2. Remove grease and oil with dry cleaning solvent (item 3, Appendix E). Dry thoroughly.
3. Inspect all parts for damage, rust, corrosion or marred finish.
4. Inspect camshaft (16) for twists and bends.
5. Inspect lubrication fitting (5). Replace if defective.

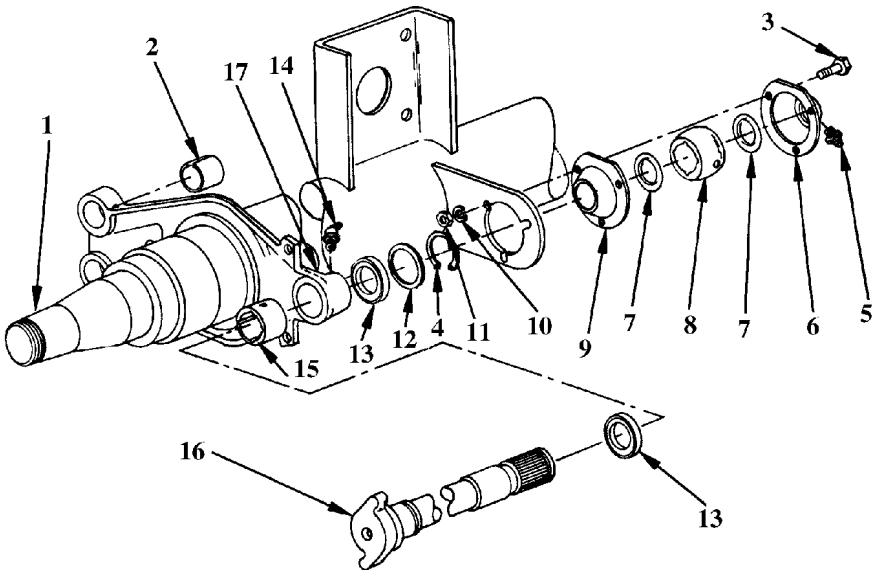

c. Installation

1. Position two preformed packings (7), bushing (8) and housing (6 and 9).
2. If removed, install bushing (15) and bushing (2). Install two seals (13).

4-54. Brake Camshaft (cont'd)

CAUTION

Make sure not to damage machined surface of camshaft when installing retaining ring. Equipment failure could result.

3. Install camshaft (16) in spider (17) portion of axle assembly (1) part way. Install spacer (12) and retaining ring (4) on camshaft.
4. Slide camshaft (16) all the way in and install spacer (12) and retaining ring (4) in position on camshaft.

Follow-on maintenance:

- Install brake shoes (para. 4-55).
- Install hub and drum assembly (para. 4-52 (XM1063) or para. 4-53 (M129A4)).
- Install wheels (para. 3-4).
- Install and adjust slack adjusters (para. 4-50 (XM1063) or para. 4-51 (M129A4).

4-55. Brake Shoes

This task covers:

a. Removal
b. Inspection
c. Installation

Initial Setup:

Tools/Test Equipment:

General mechanic's tool kit (item 01, Appendix B)

Materials/Supplies:

Equipment Conditions:

Wheels removed (para. 3-4).
Hub and drum assembly removed (para. 4-52 (XM1063) or para. 4-53 (M129A4)
Brakes caged (para. 2-27)

a. Removal

1. Hold each shoe (3) away from anchor pins (2) and remove anchor pins.
2. Remove retaining springs (1).
3. Swing back brake shoes (3) and remove shoes with return springs.
4. Remove return springs (4) from shoes. Remove cam roller spring (5) and cam roller (6).

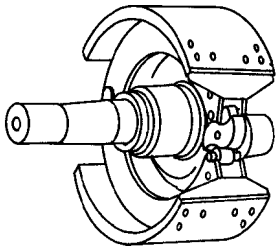

b. Inspection

1. Inspect springs for rust, obvious defects and excessive wear. Replace defective spring.
2. Inspect brake shoe lining for wear. If braking surface is within 3/16 inch of rivet heads or grease is present, replace brake shoe.

c. Installation

1. Install return spring (4), cam roller spring (5) and cam roller (6).
2. Position brake shoes (3) on axle spider and install retaining springs (1
3. Hold each shoe (3) away from cam and insert anchor pins (2).

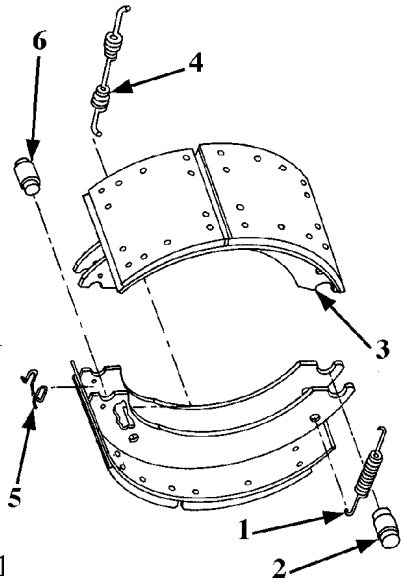

Follow-on maintenance:

- Install hub and drum assembly (para. 4-52 (XM1063) or para. 4-53 (M1
- Install wheels (para. 3-4).
- Uncage brakes (para. 2-27).
- Adjust slack adjuster (para. 4-50 (XM1063) or para. 4-51 (M129A4)).

Section IX. Platform, Spare Wheel Carrier, Landing Gear and Leveling Jack

4-56. Rear Platform (M129A4 Only)

This task covers:

a. Removal
b. Repair and inspection
c. Installation

Initial Setup:

Tools/Test Equipment:
General mechanic's tool kit (item 01, Appendix B)

Materials/Supplies:
Self-locking nuts (24)
Lock washers (4)

Equipment Conditions:
Vehicle parked on level ground.
Wheels chocked.
Brakes caged (para. 2-27).

Personnel Required: Three

a. Removal

WARNING

Rear platform is heavy. To avoid injury to personnel or damage to equipment, three persons are required to remove/install platform.

4-56. Rear Platform (M129A4 Only) (cont'd)

1. Remove four chain links (1) from two brackets (2) and two brackets (3). Remove chains.
2. Remove three capscrews (4), six flat washers (5) and self-locking nuts (6) from hinge (7). Discard self-locking nuts.

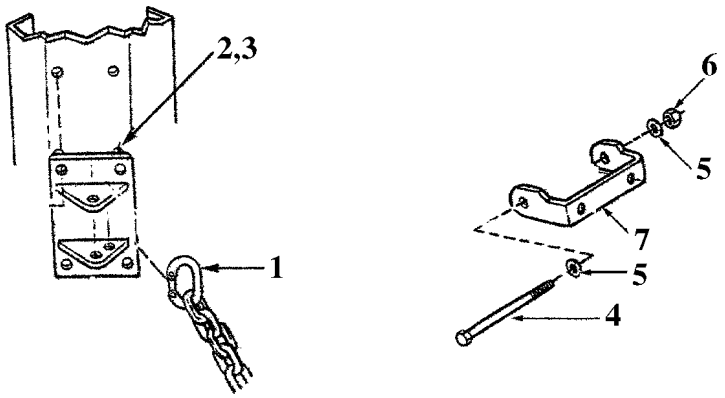

b. Repair and inspection

1. Remove two machine bolts (9), flatwashers (10), self-locking nuts (11) and hinge (7). Discard self-locking nuts.
2. Remove hinge bracket (8), four machine bolts (12), lock washers (13) and nuts (14) from trailer frame. Discard lockwashers.
3. Remove eight capscrews (15), flatwashers (16), self-locking nuts (17) and two brackets (18). Discard self-locking nuts.

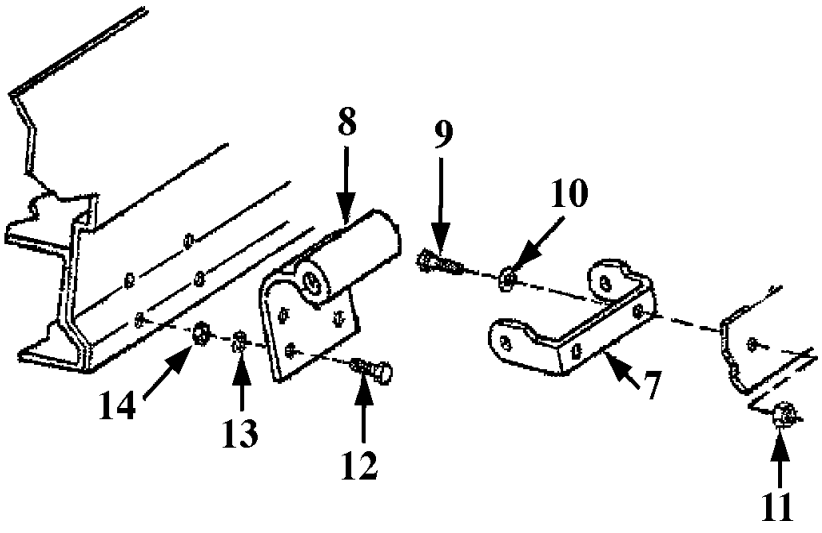

4-56. Rear Platform (M129A4 Only) (cont'd)

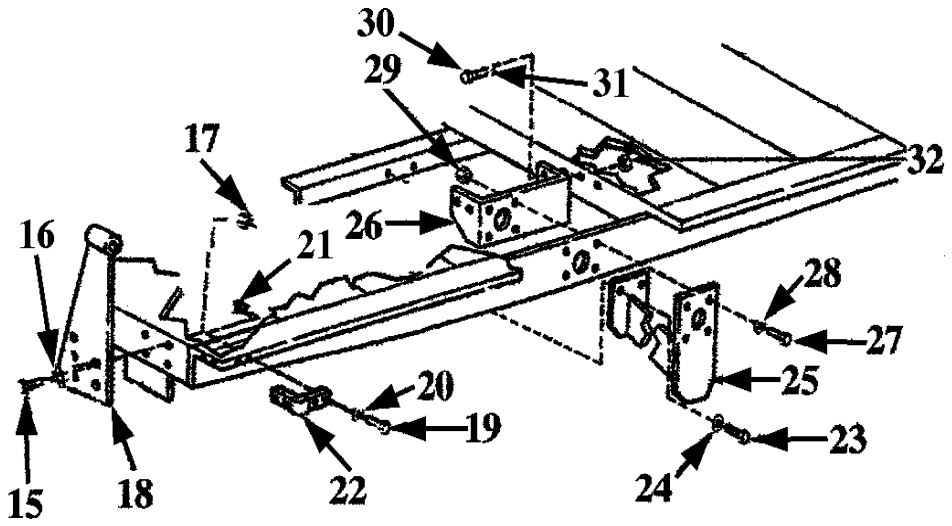

4. Remove two machine screws (19), flat washers (20), nuts (21) and two bumpers (22).
5. Remove eight screws (23) and flatwashers (24) securing brackets (25 and 26) to frame.
6. Remove four capscrews (27), flatwashers (28), nuts (29) and two mounting brackets (25).
7. Remove eight capscrews (30), flatwashers (31), self-locking nuts (32) and two angle brackets (26). Discard self-locking nuts.
8. Lubricate in accordance with Appendix I, Lubrication Instructions.
9. Install two angle brackets (26), eight capscrews (30), flat washers (31) and new self-locking nuts (32).
10. Install two mounting brackets (25), four capscrews (27), flat washers (28) and nuts (29.)
11. Install eight screws (23) and flat washers (24) securing brackets (25 and 26).
12. Install two bumpers (22), two machine screws (19), flat washers (20) and nuts (21).
13. Install two brackets (18), eight capscrews (15), flat washers (16) and new self-locking nuts (17).
14. Install hinge bracket (8), machine bolt (12), new lock washer (13) and nut (14).
15. Install hinge (7), two machine bolts (9), flat washers (10) and new self-locking nuts (11).

4-56. Rear Platform (M129A4 Only) (cont'd)

c. Installation

1. Install three capscrews (4), six flat washers (5) and self-locking nuts (6) on hinge (7).
2. Install four chain links (1) on two brackets (2) and two brackets (3). Install chains.

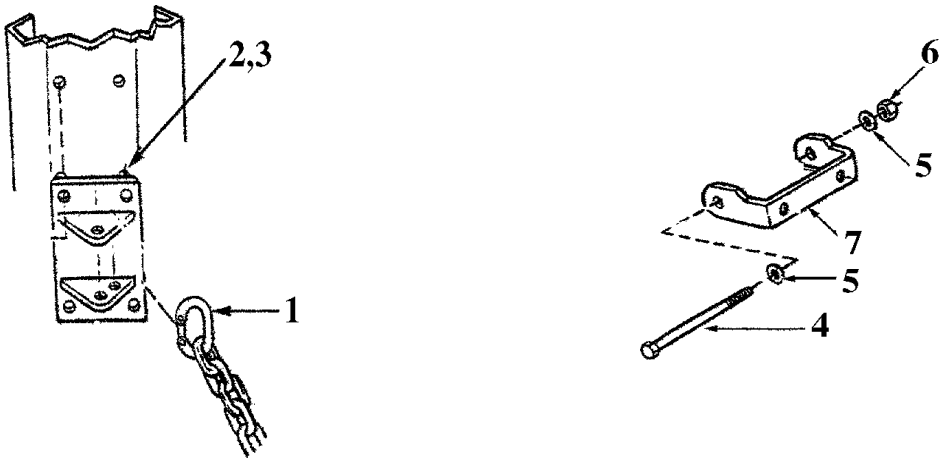

Follow-on maintenance: None

4-57. Spare Wheel Carrier (XM1063 Only)

This task covers:

a. Removal
b. Cleaning
c. Inspection and repair
d. Wire rope replacement
e. Inspection and replacement of pawl
f. Installation

Initial Setup:

Tools/Test Equipment:
General mechanic's tool kit (item 01, Appendix B)

Equipment Conditions:
Brakes caged (para. 2-27)

Materials/Supplies:
Dry cleaning solvent (Item 3, Appendix E)
Grease (Item 5, Appendix E)
Brush (Item 15, Appendix E)

Personnel Required: Two

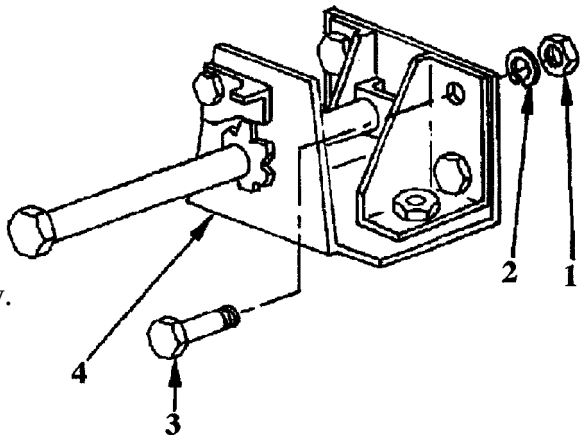

a. Removal

1. Remove spare wheel and tire (para 2-17).
2. Remove four nuts (1), washers (2) and screws (3), securing spare wheel carrier upper member (4) to dolly.
3. Remove spare wheel carrier.

b. Cleaning

1. Remove dirt and mud with water and brush (Item 15, Appendix E).


WARNING

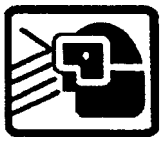


Dry cleaning solvent (P-D-680) is toxic and flammable. Avoid prolonged breathing of vapors. Avoid skin contact. Use only in a well-ventilated area. Keep away from open flame. Flash point of solvent is 138° F (50° C).

2. Remove grease and oil with dry cleaning solvent (Item 3, Appendix E). Dry thoroughly.

c. Inspection and repair

1. Check upper member (4) for cracks or breaks in welds. Straighten member and weld cracks (refer to TM 9-237).

4-57. Spare Wheel Carrier (XM1063 Only (cont'd)

2. Check ratchet wheel (5) for wear and alignment. Check weld of ratchet and nut on shaft for cracks or undue teeth wear. Re-weld if necessary.
3. Replace ratchet wheel (5) by removing cotter pin (6), washer (7) and wire rope (8). Slide worn ratchet wheel out and new one in. Secure with washer (7) and cotter pin (6). Attach wire rope (8).
4. Check lower member (9) for dents or twisted parts.
5. Check U-bolts for tightness. Check nuts (12) for stripped threads and looseness and washers (11) for damage. Replace if necessary.
6. Check wire rope (8) for frayed wire or undue wear. Replace if necessary.
7. Repair and repaint damaged surfaces, as required (refer to TM 43-0139).

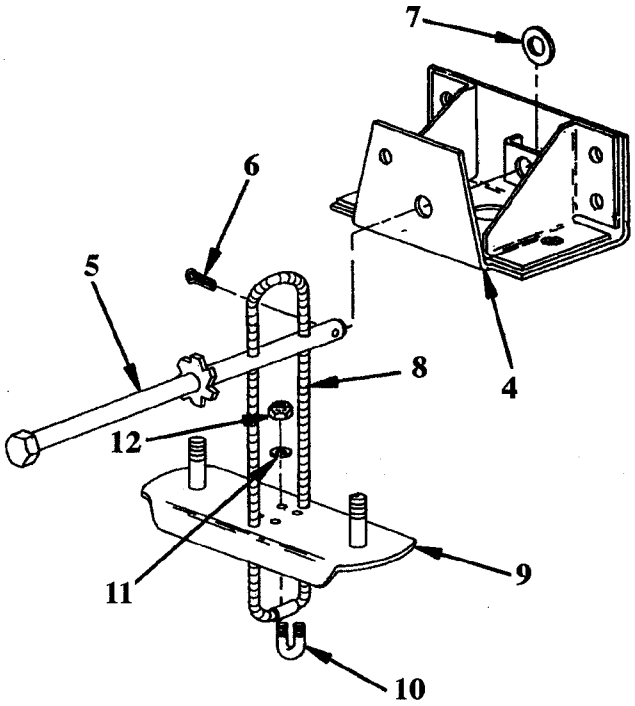

d. Wire rope replacement

1. Release wire rope (8) from lower member (9) by removing four nuts (12) and lock washers (11) from U-bolts (10).
2. Draw wire rope (8) from holes in ratchet wheel (5).
3. Insert new wire rope (8) from holes in ratchet wheel (5).

e. Inspection and replacement of pawl

1. Check pawl (13) for wear.
2. Check nut (14) and screw (15) for wear and stripped threads.
3. Check washers (16, 17, and 18) for looseness.
4. Check spacer (4) for wear and looseness.

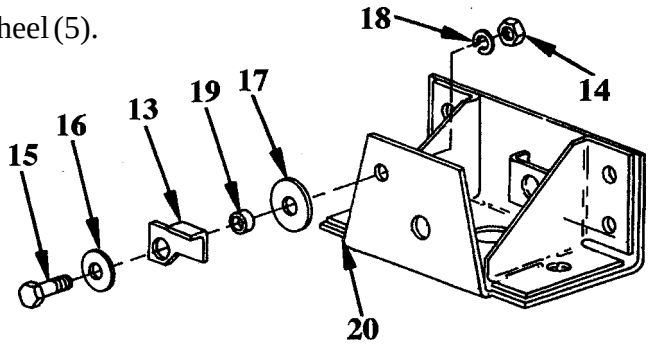

NOTE

Flat washers (16 and 17), pawl (13), and spacer (19) will be removed with pawl.

5. To replace pawl, remove nut (14), lock washer (18) and screw (15).

4-57. Spare Wheel Carrier (XM1063 Only (cont'd)

6. Replace defective parts.
7. Assemble flat washer (16), pawl (13), spacer (19) and flat washer (17) on screw (15).
8. Insert assembled parts in upper member (20). Secure with lock washer (28) and nut (14).
9. Apply grease (Item 5, Appendix E). Refer to Appendix I, Lubrication Instructions.

f. Installation

1. Align four holes in spare wheel carrier upper member (4) with holes in chassis.
2. Secure with four screws (3), lock washers (2) and nuts (1).
3. Install spare wheel and tire. Raise spare wheel (para 2-17).

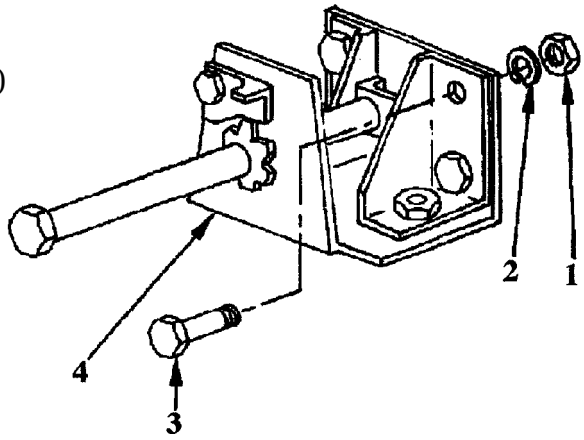

4-58. Landing Gear and Leveling Jack

This task covers:

a. Removal
b. Cleaning
c. Inspection and repair
d. Installation

Initial Setup:

Tools/Test Equipment:
General mechanic's tool kit (item 01, Appendix B)

Equipment Conditions:
Semitrailer coupled to towing vehicle or blocked for support

Materials/Supplies:
Dry cleaning solvent (Item 3, Appendix E)
Grease (Item 5, Appendix E)
Brush (Item 15, Appendix E)

Personnel Required: Two

NOTE

XM1063 and M129A4 landing gear and leveling jacks are removed/installed in the same manner. XM1063 is secured with six screws, lock washers and nuts; M129A4 is secured with eight screws, lock washers and nuts. XM1063 is shown.

M129A4 Registration Numbers NX0QVH through NX0RC9 do not include leveling jacks.

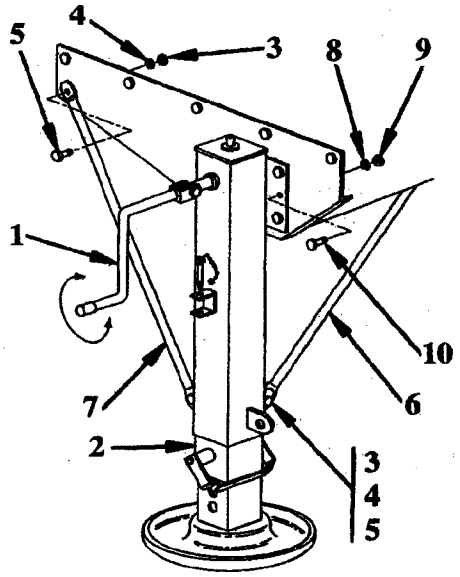

a. Removal

1. Using crank (1), extend landing gear or leveling Jack (2) to contact ground.

NOTE

One person removes screws while the other person holds self-locking nuts stationary.

2. Remove two nuts (3), washers (4), and screws (5), securing both ends of braces (6 and 7).

WARNING

Two persons are required to remove/install landing gear or leveling jack.

3. XM1063: Remove six nuts (8), washers (9), and screws (10).

   M129 A4: Remove eight nuts (8), washers (9), and screws (10).

b. Cleaning

1. Remove dirt and mud with water and brush (Item 15, Appendix E).

4-58. Landing Gear and leveling Jack (cont'd)


WARNING

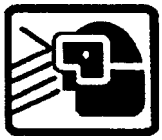


Dry cleaning solvent (P-D-680) is toxic and flammable. Avoid prolonged breathing of vapors. Avoid skin contact. Use only in a well-ventilated area. Keep away from open flame. Flash point of solvent is 138° F (50° C).

2. Remove grease and oil with dry cleaning solvent (Item 3, Appendix E). Dry thoroughly.

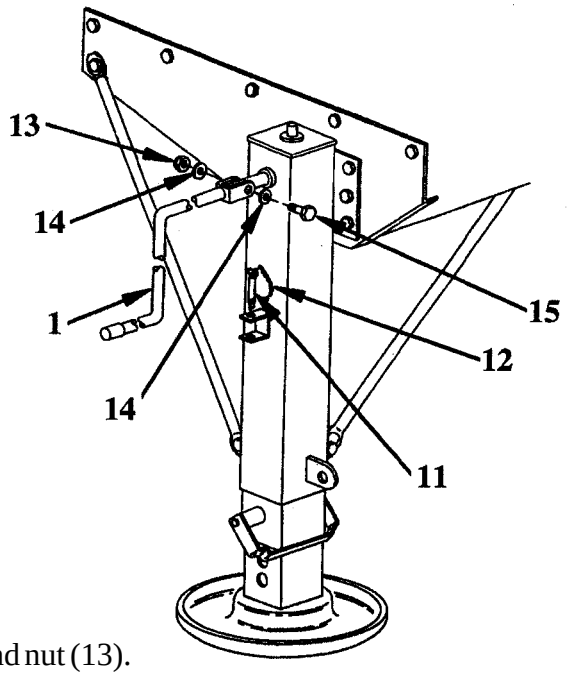

c. Inspection and Replacement

1. Inspect housing for damage.
2. Check operation. Lubricate in accordance with Appendix I, Lubrication Instructions.
3. Replace landing gear or leveling jack, if defective.
4. Check lock pin (11) and chain 12 for wear and damage. Replace defective parts.
5. Check crank (1) for damage. If defective, replace by removing nut (13), two washers (14) and screw (15).
6. Secure new crank with screw (15), two washers (14) and nut (13).

d. Installation

WARNING

Two persons are required to remove/install landing gear or leveling jack.

NOTE

One person installs self-locking nuts while the other person holds screws stationary.

1. Position landing gear or leveling jack. XM1063: Secure to mounting bracket with six nuts (8), washers (9) and screws (10). M129A4: Secure to mounting bracket with eight nuts (8), washers (9), and screws (10).
2. Position braces (6 and 7). Secure each brace with two scews (5), washers (4), and nuts (3).
3. Using crank (1), extend landing gear or leveling jack (2) to contact ground and support semitrailer.

Follow-on maintenance:

Remove towing vehicle or blocking equipment.

4-59. Landing Gear and Leveling Jack Braces (M129A4 Only)

This task covers:

a. Removal
b. Cleaning
c. Inspection and replacement
d. Installation

Initial Setup:

Tools/Test Equipment:
General mechanic's tool kit (item 01, Appendix B)

Equipment Conditions:
Semitrailer coupled to towing vehicle or blocked for support

Materials/Supplies:
Dry cleaning solvent (Item 3, Appendix E)
Grease (Item 5, Appendix E)
Brush (Item 15, Appendix E)

Personnel Required: Two

NOTE

M129A4 Registration numbers NX0QVH through NX0RC9 do not include leveling jacks.

a. Removal

1. Disconnect chain assembly (22).
2. Remove handle nut (21), washer (23), nut (24), and sand plate (20) from front brace (7).
3. Remove capscrew (1), lock washer s (2), and nut (3).
4. Remove screws (4), lock washers (5), nuts (6), and front brace (7).
5. Remove screws (8), lock washers (9), nuts (10), and rear brace (11).
6. Remove screws (12), lock washers (13), nuts (14), and side brace (15).

NOTE

Do step 7 if removing leg (19).

7. Remove eight nuts (18), washers (17), screws (16), and leg (19).

b. Cleaning

1. Remove dirt and mud with water and brush (Item 15, Appendix E).

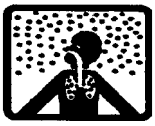


WARNING

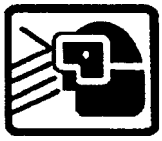


Dry cleaning solvent (P-D-680) is toxic and flammable. Avoid prolonged breathing of vapors. Avoid skin contact. Use only in a well-ventilated area. Keep away from open flame. Flash point of solvent is 138° F (50° C).

2. Remove grease and oil with dry cleaning solvent (Item 3, Appendix E). Dry thoroughly.

4-59. Landing Gear and Leveling Jack Braces (M129A4 Only) (cont'd)

c. Inspection and replacement

Inspect parts cracks, dents, rust, corrosion or other damage. Repair or replace parts as required.

d. Installation

NOTE
Do step 1 if installing leg (19).

1. Position leg (19) and secure with eight screws (16), washers (17) and nuts (18).
2. Position side brace (15) and secure with screws (12), lock washers (13) and nuts (14).
3. Position front brace (7) and secure with screws (4), lock washers (5) and nuts (6).
4. Position rear brace (11) and secure with screws (8), lock washers (9) and nuts (10).
5. Position sand plate (20) on front brace (7) and secure with handle nut (21), washer (23) and nut (24).
6. Connect chain assembly (22).

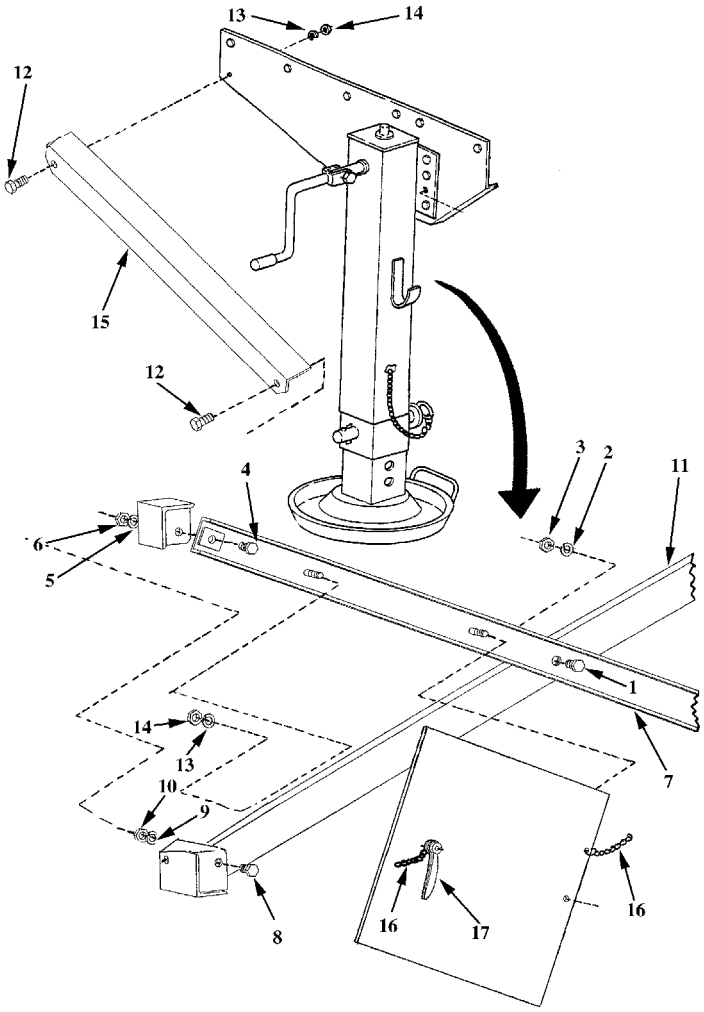

Follow-on maintenance:

- Install sand plate.
- Remove towing vehicle or blocking equipmer

4-60. Landing Gear Mounting Bracket (M129A4 Only)

This task covers:

a. Removal
b. Cleaning
c. Inspection and replacement
d. Installation

Initial Setup:

Tools/Test Equipment:
General mechanic's tool kit (item 01, Appendix B)

Equipment Conditions:
Landing gear leg removed (para. 4-58).

Materials/Supplies:
Brush (item 15, Appendix E)

Personnel Required: Two

a. Removal

1. Remove screw (1), lock washer (2) and nut (3) from upper end of cross brace
2. Remove screw (4), lock washer (5) and nut (6) from leg brace.
3. Remove five bolts (7), lock washers (8), nuts (9) and bracket (10).

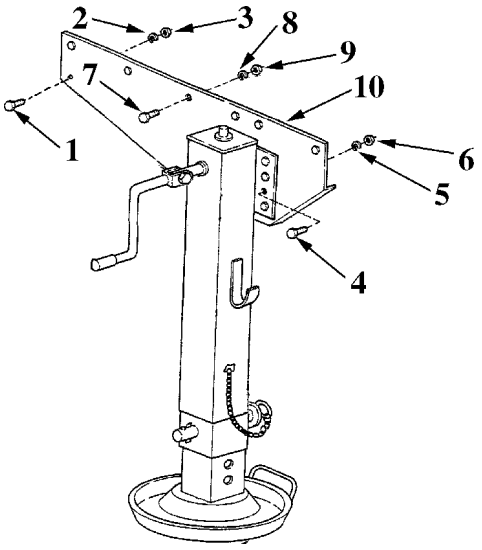

b. Cleaning

Remove dirt and mud with water and brush (item 15, Appendix E).

c. Inspection and replacement

Inspect parts cracks, dents, rust, corrosion or other damage. Repair or replace parts as required.

d. Installation

1. Position bracket (10) and secure with five bolts (7), lock washers (8) and nuts (9).
2. Install screw (4), lock washer (5) and nut (6) onto leg brace.

Follow-on maintenance:

- Install Landing Gear Leg (para. 4-58).

4-61. Lifting Arm

This task covers:

a. Removal
b. Cleaning
c. Inspection and replacement
d. Installation

Initial Setup:

Tools/Test Equipment:
General mechanic's tool kit (item 01, Appendix B)

Materials/Supplies:
Brush (item 15, Appendix E)
Grease (item 5, Appendix E)

Equipment Conditions:
Semitrailer parked on level ground.
Wheels choke
Arms in lift positon.

Personnel Required: Two

a. Removal

WARNING

Lifting arms are heavy. To prevent injury to personnel or damage to equipment, use an assistant to help support lifting arms during removal/installation.

NOTE

XM1063 has six lifting arms. M129A4 has four lifting arms. All lifting arms are removed/replaced in the same manner.

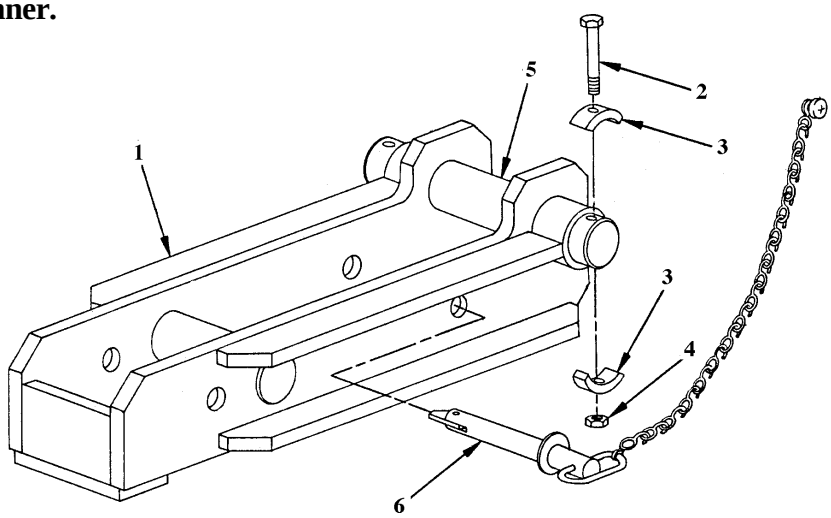

1. Have assistant support bracket (1). Remove two bolts (2), four clamps (3) and two nuts (4).
2. Remove shaft (5) and bracket (1).

WARNING

Bracket will drop after pin is removed. To avoid injury to personnel or damage to equipment, make sure lifting arm is supported.

3. Pull out pin with chain assembly (6).

4-61. Lifting Arm (cont'd)

b. Cleaning

Remove dirt and mud with water and brush (item 15, Appendix E).

c. Inspection and replacement

1. Inspect chain assembly. Replace missing or defective parts.
2. Inspect lifting arms for cracks, dents, rust, corrosion or other damage. Repair or replace parts as required.

d. Installation

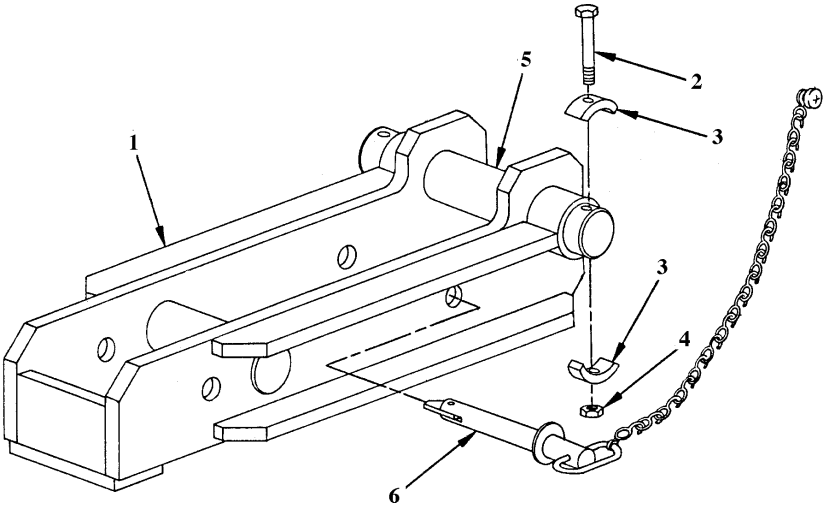

1. Coat shaft (5) with light coat of grease (item 5, Appendix E). Position bracket (1) and secure with shaft.
2. Install two bolts (2), four clamps (3) and two self-locking nuts (4).
3. Install pin with chain assembly (6).

Follow-on maintenance: None

Section X. Doors, Body and Parts Maintenance Procedures

4-62. Door Stop and Chain, Front Door (XM1063 Only)

This task covers:

a. Removal

b. Iinstallation

Initial Setup:

Tools/Test Equipment:
General mechanic's tool kit (item 01, Appendix B)

Equipment Conditions:

Materials/Supplies:

Personnel Required: Two

a. Removal

1. Remove two screws (2) and lock washers (1) securing door stop (4) to door.
2. Remove two screws (3) and lock washers (1) securing other end of door stop (4) to door frame. Remove door stop.

b. Installation

1. Position door stop (4) on door frame. Secure with two screws (3) and lock washers (1).
2. Position other end of door stop (4) on door. Secure with two screws (2) and lock washers (1).

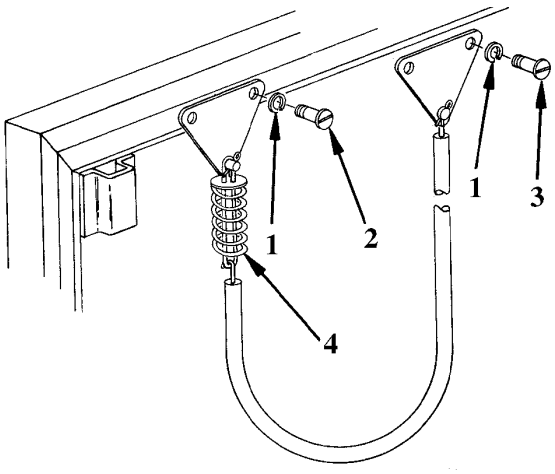

Follow-on maintenance: None

4-63. Door Holder, Rear Door

This task covers:

a. Removal

b. Installation

Initial Setup:

Tools/Test Equipment:
General mechanic's tool kit (item 01, Appendix B)

Equipment Conditions:

Materials/Supplies:

Personnel Required: Two

a. Removal

1. Remove six screws (1) securing door holder (6) to door and door frame.
2. Remove door holder (6).

NOTE

If bracket (4) is defective, do step 3.

3. Remove four nuts (2), lock washers (3), screws (5) and bracket (4).

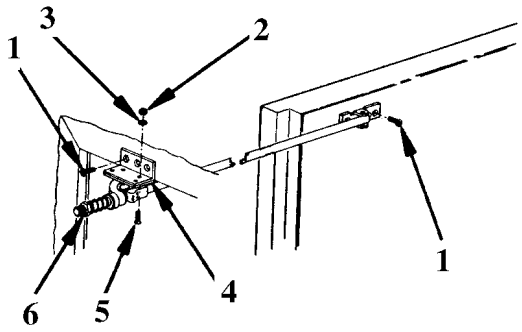

b. Installation

NOTE

If bracket (4) was replaced, do step 1.

1. Position bracket (4) and secure with four screws (5), lock washers (3) and nuts (2).
2. Position door holder (6) on door and door frame. Secure with six screws (1).

Follow-on maintenance: None

4-64. Doors

This task covers

a. Removal
b. Cleaning
c. Inspection and repair
d. Installation

Initial Setup:

Tools/Test Equipment:
General mechanic's tool kit (item 01, Appendix B)

Equipment Conditions:

Materials/Supplies:
Dry cleaning solvent (item 3, Appendix E)
Brush (item 15, Appendix E)

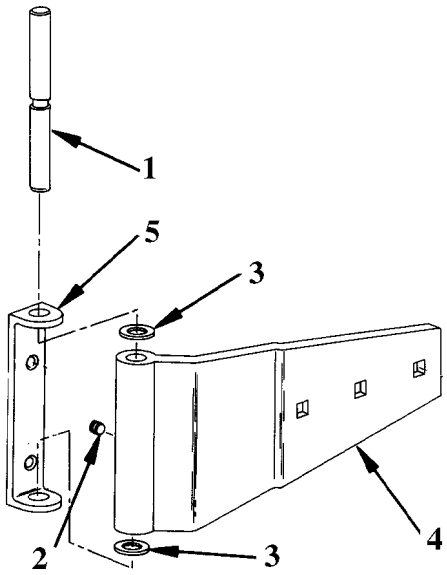

a. Removal

1. Remove setscrews (2) securing three hinge pins (1).
2. Drive out hinge pins (1). Remove two flat washers (3), located between each hinge butt (5) and hinge strap (4). Remove door.

b. Cleaning

1. Remove dirt and mud with steam or water and brush (item 15, Appendix E).

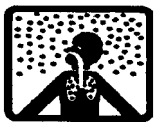


WARNING

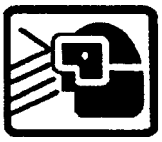


Dry cleaning solvent (P-D-680) is toxic and flammable. Avoid prolonged breathing of vapors. Avoid skin contact. Use only in a well-ventilated area. Keep away from open flame. Flash point of solvent is 138° F (50° C).

2. Remove grease and oil with dry cleaning solvent (item 3, Appendix E). Dry thoroughly.

c. Inspection and repair

1. Inspect door for cracks, dents or other damage. Repair or replace parts as required.
2. Visually inspect all hardware for defects. Replace defective parts.
3. Weld cracked or fractured items (refer to TM 9-237).

4-64. Doors (cont'd)

d. Installation

1. Position door on frame.
2. Position two flat washers (3) between each hinge strap (4) and hinge butt (5). Insert each hinge pin (1).
3. Secure each hinge pin (1) with setscrew (2).

Follow-on maintenance: None

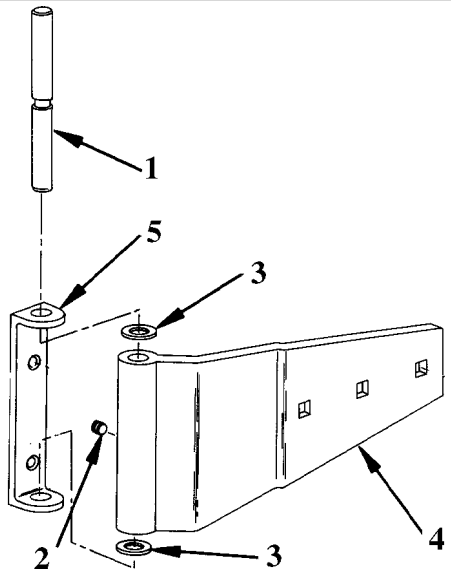

4-65. Door Hinge

This task covers:

a. Removal
b. Inspection and repair
c. Installation

Initial Setup:

Tools/Test Equipment:
General mechanic's tool kit (item 01, Appendix B)

Equipment Conditions:
Door removed (para. 4-64).

Materials/Supplies:

Personnel Required:

a. Removal

NOTE

To remove hinge strap (4) from door, remove interior door handle and lower lock assembly (para. 4-67 or para. 4-68).

1. Remove interior door handle and lower lock assembly (para. 4-67 or para. 4-68).
2. Remove rivets and/or screws securing inner door panel(s).
3. Remove three nuts (6) and screws (7) securing hinge strap (4). Remove hinge strap.

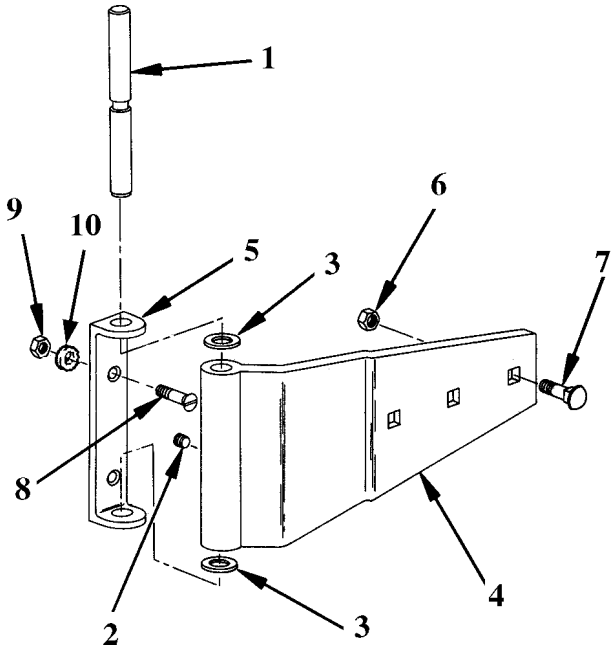

4-65. Door Hinge (cont'd)

NOTE

Washers (10) are on M129A4 door hinge only.

4. Remove two washers (10), nuts (9), screws (8) and hinge butt (5).

b. Inspection and repair

1. Inspect hinge for cracks and evidence of deterioration.
2. Straighten bent parts, if possible.
3. Replace parts damaged beyond repair.

c. Installation

NOTE

Washers (10) are on M129A4 door hinge only.

1. Position hinge butt (5) on door frame. Secure with two screws (8), nuts (9) and washers (10).
2. Position hinge strap (4) on door. Secure with three screws (7) and nuts (6).
3. Position inner panels and secure with rivets and/or screws.

NOTE

To install hinge strap (4) from door, install interior door handle and lower lock assembly (para. 4-67 or 4-68).

4. Install interior door handle and lower lock assembly (para. 4-67 or 4-68)

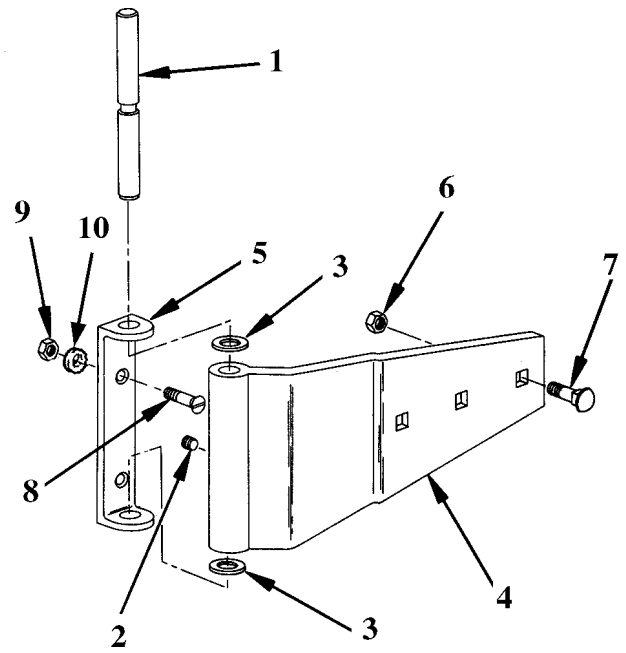

.Follow-on maintenance:

- Install door (para. 4-64).

4-66. Exterior Handle, Rear Door

This task covers:

a. Removal

b. Installation

Initial Setup:

Tools/Test Equipment:
General mechanic's tool kit (item 01, Appendix B)

Equipment Conditions:

Materials/Supplies:
Loctite (item 7, Appendix E)

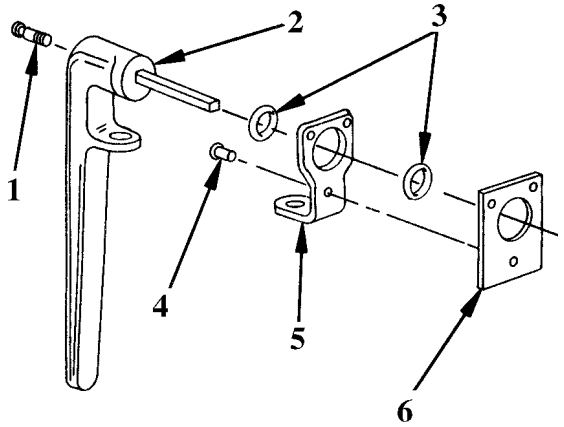

a. Removal

1. Remove screw (1) securing exterior handle (2) on shaft.
2. Remove handle (2) and outer preformed packing (3).
3. Remove three rivets (4) and inner preformed packing (3), escutcheon plate (5) and spacer (6).

b. Installation

1. Position spacer (6) inner preformed packing (3) and escutcheon plate (5). Secure with three rivets (4).

CAUTION

Over- torque of screw (1) will cause fracture of interior shear pin.

NOTE

Screw (1) must be coated with loctite prior to installation.

2. Apply loctite (item 7, Appendix E) to threads of screw (1). Secure handle (2) with screw (1) to torque of 3-4 lb-ft (4.07-5.42 Nm).

Follow-on maintenance: None

4-67. Interior Handle

This task covers:

a. Removal

b. Installation

Initial Setup:

Tools/Test Equipment:
General mechanic's tool kit (item 01, Appendix B)

Equipment Conditions:

Materials/Supplies:

a. Removal

NOTE

Center locking rod (4) will remain attached to upper lock assembly. Lower locking rod will remain attached to lower slide bolt assembly.

Remove two shoulder screws (1) and spacers (2) securing interior handle (3) and lower end of center locking rod (4) and upper end lower locking rod (5) on lower lock assembly (6).

b. Installation

1. Position lower end of center locking rod (4) and upper end of lower locking rod (5) with interior handle (3) on lower lock assembly (6).
2. Secure handle and rods with two shoulder screws (1) and spacers (2).

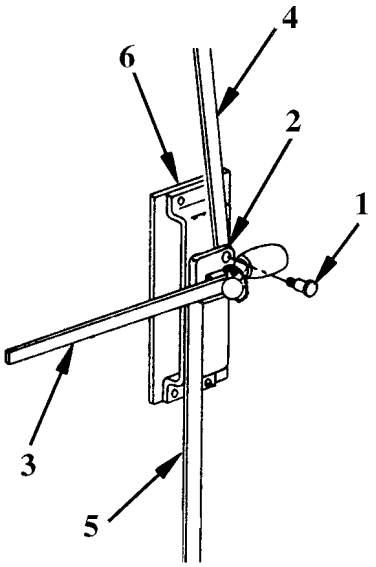

Follow-on maintenance: None

4-68. Lower Lock Assembly

This task covers:

a. Removal
b. Inspection and repair
c. Installation

Initial Setup:

Tools/Test Equipment:
General mechanic's tool kit (item 01, Appendix B)

Equipment Conditions:
Interior handle removed (para. 4-66).

Materials/Supplies:
Grease (item 5, Appendix E)

a. Removal

Remove four bolts (7), washers (6) and nuts (5) and lower lock assembly (4).

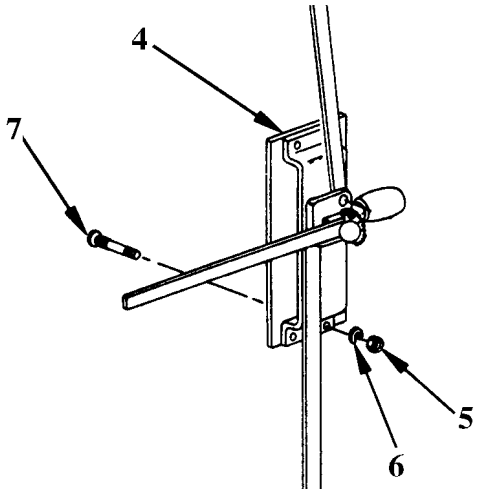

b. Inspection and repair

1. Inspect parts for cracks, bends, excessive wear and deterioration. Replace defective parts.
2. Straighten locking rods to assure proper alignment in upper ar lower bolt slide fasteners.
3. Straighten bends or dents in slide bolt assembly covers that m cause binding.
4. Check lock for ease of operation. Using grease fitting on hanc lock assembly, lubricate in accordance with Appendix I, Lubrication Instructions.
5. With door locked from outside, remove safety release pin (3). Remove lock pin (2), turn handle (1) and note if door opens easily.
6. Clean and paint if necessary.
7. Replace defective parts.

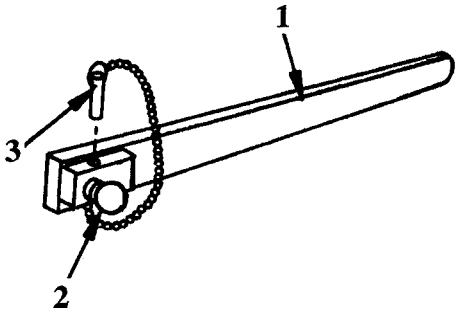

c. Installation

Position lower lock assembly (4). Secure with four bolts (7), washers (6) and nuts (5).

Follow-on maintenance:

- Install interior handle (para. 4-66).

4-69. Slide Bolt Assemblies

This task covers:

a. Removal
b. Inspection and repair
c. Installation

Initial Setup:

Tools/Test Equipment:
General mechanic's tool kit (item 01, Appendix B)

Equipment Conditions:

Materials/Supplies:

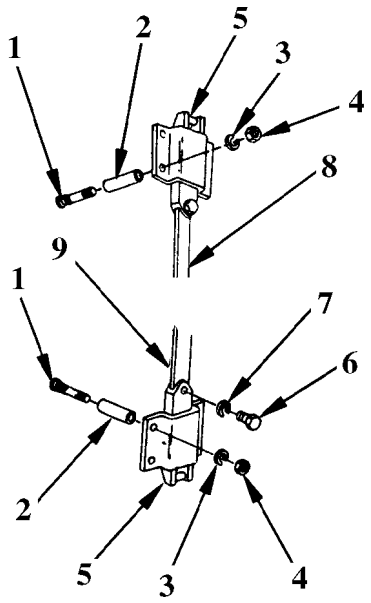

a. Removal

1. Remove screws (6) and washers (7) securing upper and lower locking rods (8 & 9) to slide bolt assemblies (5). Remove locking rods.
2. Remove four bolts (1), spacers (2), washers (3) and nuts (4) securing each slide bolt assembly (5). Remove slide bolt assembly.

b. Inspection and repair

1. Inspect parts for cracks, bends, excessive wear and deterioration. Replace defective parts.
2. Straighten locking rods to assure proper alignment in upper and lower bolt slide fasteners.
3. Straighten bends or dents in slide bolt assembly covers that may cause binding.
4. Check lock for ease of operation. Using grease fitting on handle lock assembly, lubricate in accordance with Appendix I, Lubrication Instructions.
5. Clean and paint if necessary.
6. Replace defective parts.

c. Installation

1. Position slide bolt assembly (5). Secure with four bolts (1), spacers (2), washers (3) and nuts (4).
2. Position upper locking rod (8) on upper slide bolt assembly (5). Position lower locking rod (9) on lower slide bolt assembly (5).
3. Secure locking rods to slide bolt assemblies with screws (6) and washers (7).

Follow-on maintenance: None

4-70. Upper Lock Assembly

This task covers:

a. Removal
b. Inspection and repair
c. Installation

Initial Setup:

Tools/Test Equipment:
General mechanic's tool kit (item 01, Appendix B)

Equipment Conditions:

Materials/Supplies:

a. Removal

1. Remove shoulder screw (1) and spacer (2) securing center locking rod (3) and upper locking rod (4) to upper lock assembly (5).

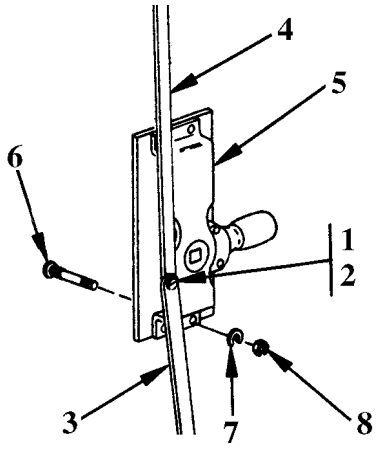

NOTE

Upper locking rod will remain attached to upper slide bolt assembly.

2. Remove center locking rod (3).
3. Remove four bolts (6), washers (7) and nuts (8) and upper lock assembly (5).

b. Inspection and repair

1. Inspect parts for cracks, bends, excessive wear and deterioration. Replace defective parts.
2. Straighten locking rods to assure proper alignment in upper and lower bolt slide fasteners. Replace defective parts.
3. Straighten bends or dents in slide bolt assembly covers that may cause binding. Replace defective parts.
4. Check lock for ease of operation. Using grease fitting on handle lock assembly, lubricate in accordance with Appendix I, Lubrication Instructions.
5. Clean and paint if necessary.

c. Installation

1. Position upper lock assembly (5). Secure with four bolts (6), washers (7) and nuts (8).
2. On upper lock assembly (5), position lower end of upper locking rod (4) with upper end of center locking rod (3). Secure with shoulder screw (1) and spacer (2).

Follow-on maintenance: None

4-71. Door Seals

This task covers:

a. Removal
b. Cleaning
c. Installation

Initial Setup:

Tools/Test Equipment:
General mechanic's tool kit (item 01, Appendix B)

Equipment Conditions:

Materials/Supplies:
Dry cleaning solvent (item 3, Appendix E

NOTE

Doors have both rubber seals and Radio Frequency Interference (RFI) shielding seals. Both types are removed, cleaned and installed in the same manner.

a. Removal

To remove both types of seals, open door and pry seals from groove.

b. Cleaning

1. Make certain jams and thresholds are free of dust, dirt and grime.

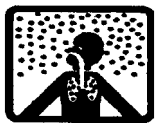


WARNING

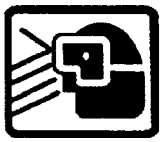


Dry cleaning solvent (PD-680) is toxic and flammable. Avoid prolonged breathing of vapors. Avoid skin contact. Use only in a well-ventilated area. Keep away from open flame. Flash point of solvent is 138° F (50° C).

2. Use fine steel wool to remove any grease or grime. Clean with dry cleaning solvent (item 3, Appendix E).

c. Installation

Insert seals in grooves.

4-72. Splash Guard

This task covers:

a. Removal

b. Installation

Initial Setup:

Tools/Test Equipment:
General mechanic's tool kit (item 01, Appendix B)

Equipment Conditions:

Materials/Supplies:

a. Removal

Remove four nuts (1), washers (2) screws (3) spacer (4) and splash guard (5) to bracket.

b. Installation

Position splash guard (5) and spacer (4) on bracket. Secure with four screws (3), washers (2) and nuts (1).

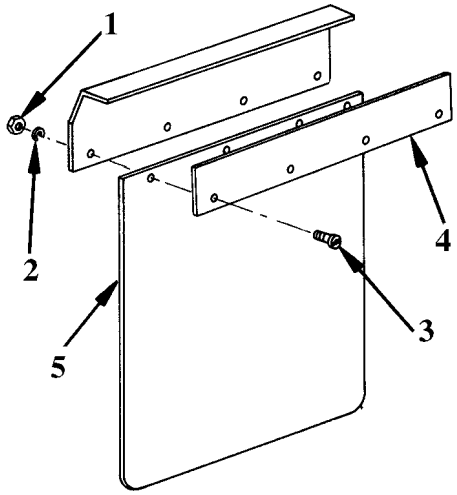

Follow-on maintenance: None

4-73. Ladder Bracket

This task covers:

a. Removal

b. Installation

Initial Setup:

Tools/Test Equipment:
General mechanic's tool kit (item 01, Appendix B)

Equipment Conditions:

Materials/Supplies:

a. Removal

1. Remove four screws (1) and washers (3) securing upper end of ladder bracket (4).
2. Remove two screws (2) and washers (3) securing lower end of ladder bracket (4) and spacer (5).
3. Remove bracket (4).

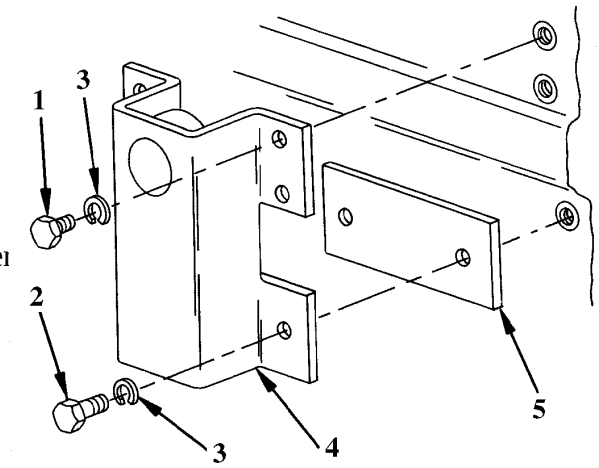

4-73. Ladder Bracket (cont'd)

b. Installation

1. Position ladder bracket (4) and spacer (5). Secure with two screws (2) and washers (3).
2. Secure upper end of bracket (4) with four screws (1) and washers (3).

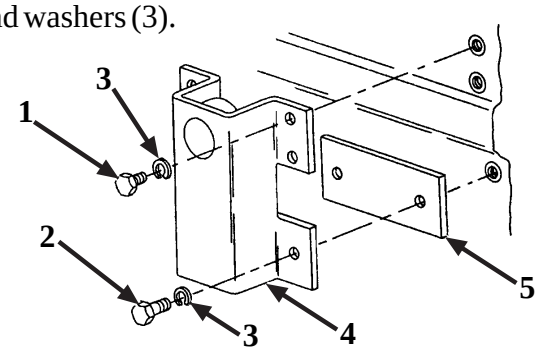

Follow-on maintenance: None

4-74. Air Vent (M129A4 Only)

This task covers:

a. Removal

b. Installation

Initial Setup:

Tools/Test Equipment:
General mechanic's tool kit (item 01, Appendix B)

Equipment Conditions:

Materials/Supplies:

NOTE

M129A4 has two air vents, located on inside front wall. Both are removed/installed in the same manner.

a. Removal

Remove four screws (1) vent cover (2) and screen (3) from opening on interior front wall (4).

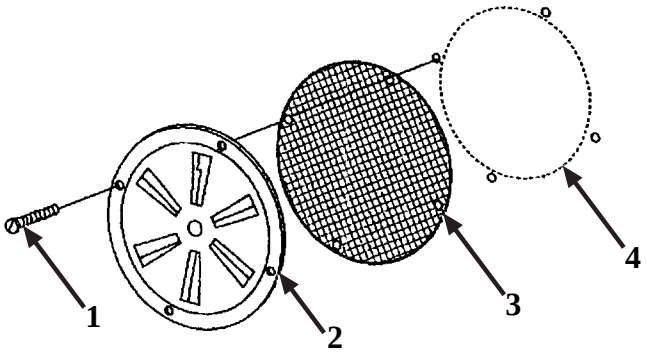

b. Installation

Position screen (3) and vent cover (2) on opening on interior front wall (4). Secure with four screws (1).

Follow-on maintenance: None

4-75. Reflector

This task covers:

a. Removal

b. Installation

Initial Setup:

Tools/Test Equipment:
General mechanic's tool kit (item 01, Appendix B)

Equipment Conditions:

Materials/Supplies:
Sealant (item 13, Appendix E)

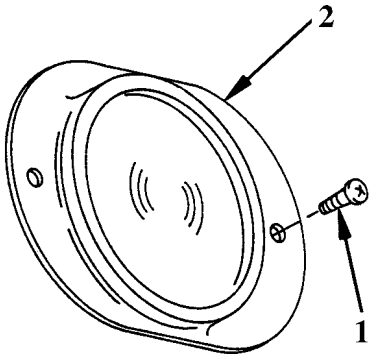

a. Removal

Remove two screws (1) and reflector (2).

b. Installation

1. Apply sealant (item 13, Appendix E) in and around mounting hol
2. Position reflector (2) on body and secure with two screws (1).

Follow-on maintenance: None

4-76. Tool Box (M129A4 Only)

This task covers:

a. Removal

b. Installation

Initial Setup:

Tools/Test Equipment:
General mechanic's tool kit (item 01, Appendix B)

Equipment Conditions:
Tool box empty.

Materials/Supplies:

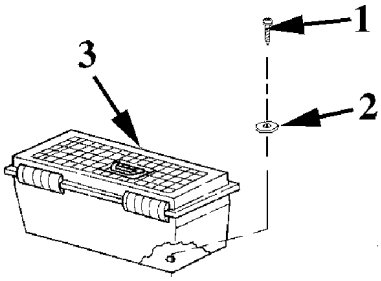

a. Removal

Remove bolts (1), nuts (2) and tool box (3).

b. Installation

Position tool box (3) and secure with bolts (1) and nuts (2).

Follow-on maintenance: None

4-77. Identification Plate

This task covers:

a. Removal
b. Inspection
c. Installation

Initial Setup:

Tools/Test Equipment:
General mechanic's tool kit (item 01, Appendix B)

Equipment Conditions:

Materials/Supplies:
Enamel (item 20, Appendix E)

NOTE

XM1063 and M129A4 Identification Plates are removed/installed in the same manner. XM1063 is shown.

a. Removal

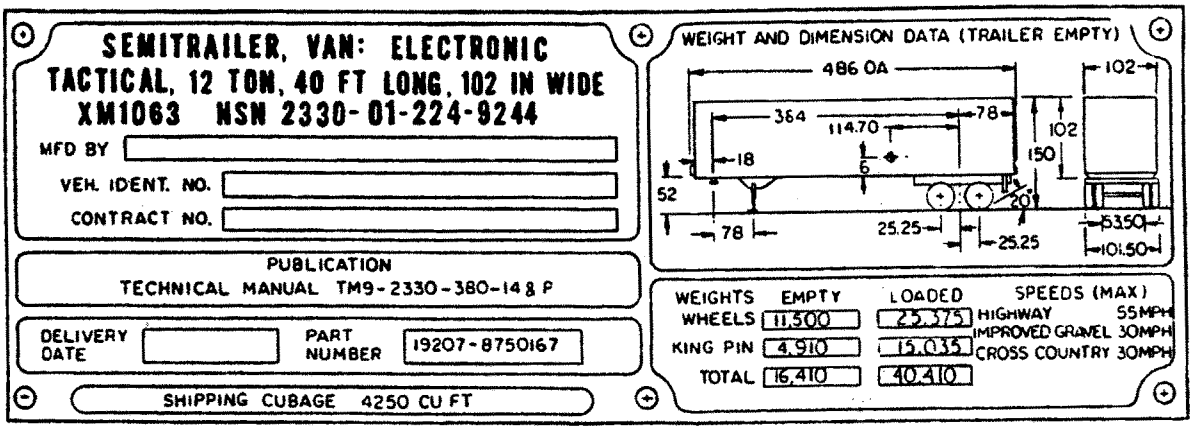

Remove six rivets and identification plate.

b. Inspection

1. Inspect for damage and rust. Replace as required.
2. Remove rust. Clean thoroughly and apply a heavy coat of enamel (item 20, Appendix E).

c. Installation

Position identification plate and secure with six rivets.

Follow-on maintenance: None

4-78. Fire Extinguisher Bracket (M129A4 Only)

This task covers:

a Removal
b. Inspection
c. Installation

Initial Setup:

Tools/Test Equipment:
General mechanic's tool kit (item 01, Appendix B)

Equipment Conditions:
Fire extinguisher removed.

Materials/Supplies:

NOTE

There are two fire extinguisher brackets on the M129A4; one on the front wall and one by the rear door. Both are removed/installed in the same manner.

a. Removal

Remove four self-tapping screws (1) and bracket (2).

b. Inspection

Inspect for cracks, dents, rust, corrosion, marred paint or other damage. Repair or replace as required.

c. Installation

Position bracket (2) and secure with four self-tapping screws (1).

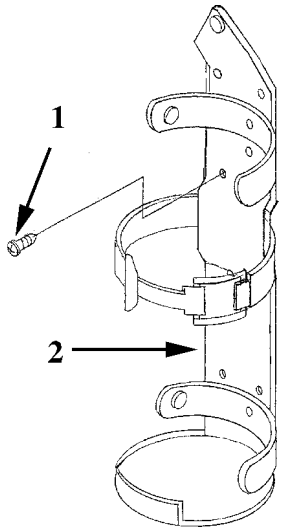

Follow-on maintenance: None

4-79. Technical Manual Box (M129A4 Only)

This task covers:

a. Removal

b. Installation

Initial Setup:

Tools/Test Equipment:
General mechanic's tool kit (item 01, Appendix B)

Equipment Conditions:

Materials/Supplies:

a. Removal

1. Lift and slide off cover (1).
2. Remove four blind rivets (2) and box (3).

b. Installation

1. Position box (3) and secure with four blind rivets (2).
2. Slide cover (1) into position.

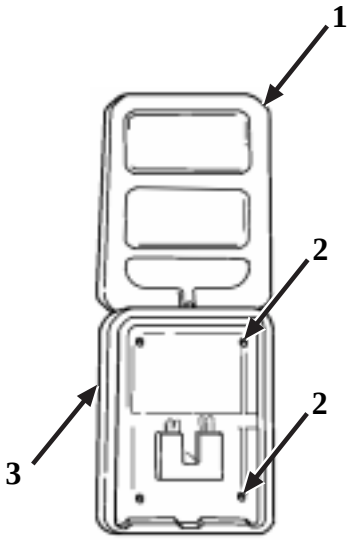

Follow-on maintenance: None

4-80. Dolly Assembly (XM1063 Only)

Remove/install dolly assembly in accordance with instructions on para. 4-92.

4-81. Maintenance Under Unusual Conditions

a. Extreme Cold Weather Conditions

For maintenance procedures and practices during extreme cold weather, refer to FM 9-207.

b. Extreme Hot Weather Maintenance

1. In hot dry climates, corrosive action will occur on all parts of the semitrailer. It will be accelerated during rainy weather.
2. Evidence of corrosion will appear in the form of rust, paint blisters, mildew, mold and fungus growth.
3. Remove corrosion from exterior metal surfaces with abrasive paper or cloth. Apply a protective coating of paint or touch up existing paint.
4. Keep a film of engine lubricating oil (OE-30) on unfinished exposed metal surfaces.

c. Maintenance After Fording

Refer to TM 9-238 for maintenance procedures after fording.

d. Maintenance After Operation On Unusual Terrain

1. Thorough cleaning and lubrication of all parts must be accomplished as soon as possible after operation in mud.
2. Clean all suspension components. Repack wheel bearings if necessary.
3. After operation in sand or dust, touch up all painted surfaces damaged by sandblasting.
4. Lubricate completely to force out lubricants contaminated by sand or dust.

Section XI. PREPARATION FOR STORAGE OR SHIPMENT

4-82. Administrative Storage

The placement of equipment in administrative storage can be for short periods of time when a shortage of maintenance effort exists. Items should be ready for use within the time factors as determined by the directing authority. During the storage period appropriate maintenance records will be kept.

4-83. Storage Site

Select the best available site for administrative storage. Separate stored equipment from equipment in use. Conspicuously mark the area "Administrative Storage".

Covered space is preferred. When sufficient covered space for all items to be stored is not available, priority should be giben to items which are most susceptible to deterioration from the elements. SB 740-98-1 should be used as a guide for establishing which items are most susceptible to deterioration.

Open sites should be improved hardstand if possible. Unimproved sites should be firm, well-drained and kept free of excessive vegetation.

4-84. Storage Plan

Store equipment so it is provided maximum protection from the elements and to provide access for inspection, maintenance and exercising. Anticipate removal or deployment problems and take suitable precautions. For example, strategically locate recovery vehicles, snowplows, slave units and similar items that are likely to be needed on short notice.

Take into account environmental conditions, such as extreme heat or cold, high humidity, blowing sand or loose debris, soft ground, mud, heavy snow, and take adequate precautions.

Establish a fire plan and provide for adequate firefighting equipment and personnel.

4-85. Maintenance Services, Inspection and Lubrication

Prior to storage, perform scheduled major preventive maintenance service (monthly or semiannually).

Inspect and approve equipment prior to storage. When applicable, perform PMCS. Do not place equipment in storage in NOT READY condition.

Lubricate equipment in accordance with the applicable lubrication instructions located in Appendix I.

4-86. Corrections Of Deficiencies

Correct all shortcomings and deficiencies prior to storage or obtain a waiver from the approving authority.

4-87. Cleaning, Painting and Preservation

Clean all equipment of dirt, grease and other contaminants in accordance with applicable provisions of this manual. Do not use vapor degreasing. Remove foreign objects that are wedged in and between dual wheels.

CAUTION

Do not direct water or steam under pressure against air outlets, unsealed electrical systems, fire control instruments, upholstery or any exterior opening that will damage a component.

Remove rust and damaged paintby scraping, wire brushing, sanding or buffing. Sand to smooth finish and spot paint as necessasry. Refer to TM 43-0139.

NOTE

Air circulation under draped covers reduces deterioration from moisture and heat.

Sunlight, heat, moisture (humidity) and dirt tend to hasten deterioration. Install all covers (including vehicle protective closures) authorized for the equipment. Close and secure all openings except those required for venting and draining. Seal all openings to prevent the entry of rain, snow or dust.

CAUTION

To avoid damage to equipment, place a piece of barrier material (item 4, Appendix E) between dessicant bags and metal surfaces.

Insert dessicant (item 4, Appendix E) when complete seal is required. Place equipment and provide blocking or framing to allow ventilation and water drainage. Support cover away from item surfaces which may rust, rot or mildew.

4-88. Care Of Equipment In Administrative Storage

a. Maintenance services

After equipment has been placed in administrative storage, suspend all regularly scheduled preventive maintenance services and inspect and exercise as specified in this manual. Refer to DA PAM 710-2-1.

b. Inspection

Inspection will usually be visual and must consist of at least a walk-around examination of all equipment to note any deficiencies that may have occurred. Inspect equipment in open storage weekly and that in covered storage monthly. Immediately after any severe storm or environmental change, inspect all equipment. The following are examples of things to look for during visual inspection:

1. Low or flat tires
2. Leaks
3. Condition of preservatives, seals and wraps
4. Torn, frayed or split canvas covers and tops
5. Corrosion or other deterioration
6. Missing or damaged parts
7. Water in components
8. Any other readily recognizable deficiencies.

c. Repair during administrative storage

Keep equipment in optimum state of readiness. Accomplish required services and repairs as expeditiously as possible. Whenever possible, perform all maintenance "on site".

d. Exercising

Perform the before, during and after operational checks in accordance with this manual. Conduct applicable ESC inspections. Immediately take action to correct any shortcomings or deficiencies noted. Note inspection and exercise results on DA Form 2404. Record and report maintenance actions on DA Form 2407. After exercising, restore the preservation to the original condition. Replenish fuel and oil used during exercising and note the amount on DA Form 2408-1.

e. Rotation

To assure utilization of all assigned materiel, rotate items in accordance with rotational plan that will keep equipment in operational condition and reduce maintenance effort.

4-89. Removal of Equipment From Administrative Storage

Activating and servicing

Restore equipment to normal operating condition in accordance with applicable technical manuals.

Resume the maintenance service schedule in effect at the beginning of storage or service the equipment before the scheduled dates in order to produce a staggered maintenance workload.

4-90. Preparation For Air Shipment of Semitrailer (XM1063 Only)

The XM1063 semitrailer has been designed for the 40K-Loader to load the semitrailer in C130 or C141 aircraft.

The XM1063 semitrailer may be loaded into the C5 aircraft without the use of the K-Loader. The semitrailer is driven into the C5 aircraft for shipment.

4-91. Components of Aircraft Loading Equipment (XM1063 Only)

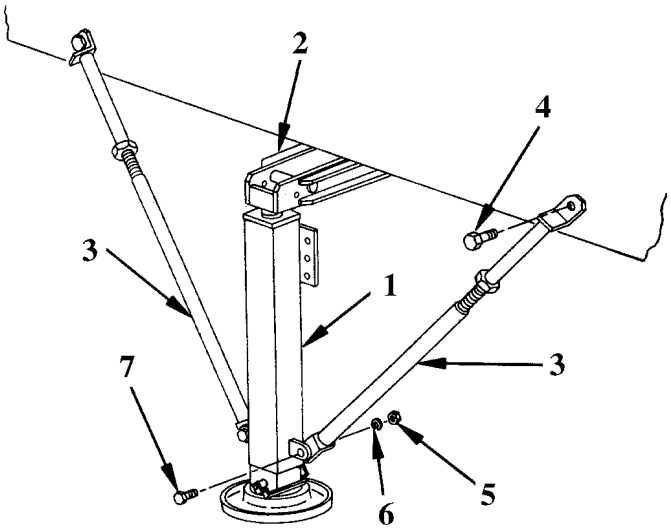

a. Two leveling jacks (removed from rear dolly assembly) act as lifting/loading jacks (1).

b. Four lifting jack braces (3) (stowed in front of dolly) and screw (4), nut (5), washer (6) and screw (7).

c. Two lifting arms (2), located underneath van body.

4-92. Loading Procedure (XM1063 Only)

This task covers:

a. Preliminary steps
b. Caging brakes
c. Loading into aircraft

Initial Setup:

Tools/Test Equipment:
9/16 inch allen wrench (1)
3/4 inch deep well socket, 3/4 inch drive (1)
1-1/8 inch deep well socket, 3/4 inch drive (1)
1-1/8 inch combination wrench (1)
15/16 inch deep well socket, 3/4 inch drive (1)
15/16 inch combination wrench (1)
1-11/16 inch socket, 3/4 inch drive (1)
8 inch to 10 inch socket extension, 1/2 inch drive (1)
Ratchet, 1/2 inch drive (1)
Ratchet, 3/4 inch drive (1)
3/4 inch combination wrench (1)
18 inch drift pin (1)
Tanger bar (1)

Equipment Conditions:

Materials/ Supplies:

Personnel required: Three

a. Preliminary steps

1. Place towing vehicle and semitrailer on level ground, as close to aircraft as possible.
2. Remove plastic plugs from tie down ring holes in van body and set aside in interior of semitrailer for reinstallation after unloading semitrailer from aircraft. Remove tie down rings from stowage in van body and install all 30 in van tie down holes.

b. Caging brakes

NOTE

Cage brakes as follows to allow free movement of dolly when dolly attaching hardware is removed.

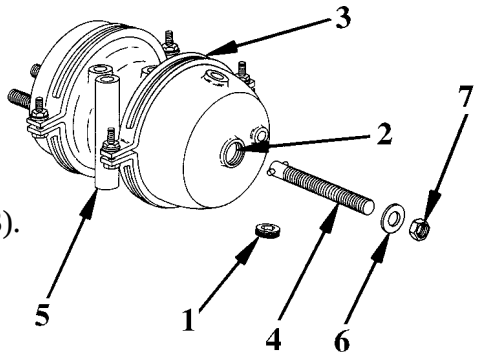

1. Remove pie plug (1) from release tool hole (2) in air chamber (3).
2. Remove release tool (4) from bracket (5) on air chamber.
3. Insert release tool (4) in release tool hole (2).
4. Turn release tool (4) 1/4 turn to lock in position.
5. Install washer (6) and nut (7) on release tool (4) and tighten against body of air chamber (3).
6. Repeat steps 1 through 5 for remaining air chambers.

4-92. Loading Procedure (XM1063 Only) (cont'd)

c. Loading procedures

NOTE

When removing or installing self-locking nuts, one person holds the nut stationary while the other person turns the screw or bolt.

Do not remove five screws on each side of dolly that attach dolly to van body until instructed to do so.

1. Working as a team, loosen five screws on each side of dolly that attach dolly to van body.
2. Disconnect electrical connector on left side of dolly by pulling up snap lock tab (1) to release locking clamp (2). Pull connector from plug.
3. Stow removed connector in locking clamp on dolly left side rail. Close snap lock.
4. Disconnect front and rear brake lines by pulling back quick disconnect coupling collar. Pull apart the connecting brake lines. Stow dolly portion of line inside dolly rail.

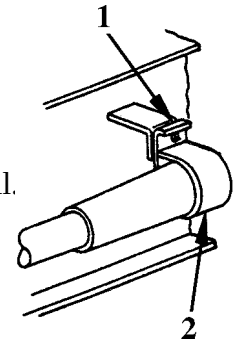

NOTE

When removing or installing self-locking nuts, one person holds the nut stationary while the other person turns the screw or bolt.

5. Working as a team, remove leveling jack braces (1 & 2) by removing nuts (3), washers (4) and screws (5) securing braces to mounting bracket at top and to lower jack leg at the bottom. Install hardware removed from top of braces in holes in mounting bracket. Install hardware removed from bottom of braces in holes at bottom of leg.
6. Lift release handle (6) on leveling jack to release drop leg (7). Lower drop leg to lowest position before contacting ground. Return handle to locked position.
7. Release pin (8) securing each crank (9) in stowage bracket (10) on leg. Place crank in operating position. Turn each clockwise until bottom of drop leg (7) contacts ground to support leg only, not van body. Return crank to stowed position and secure with pin (8).

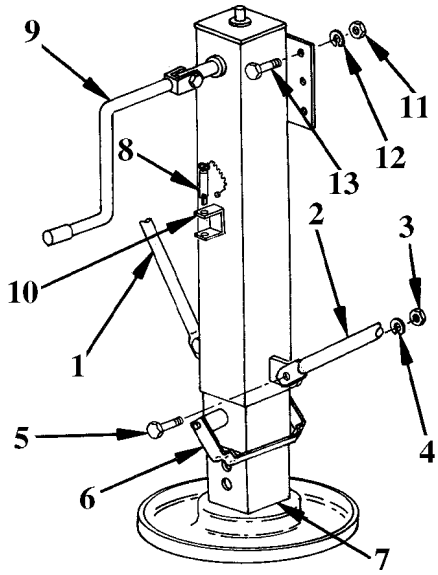

WARNING

Leveling jack is heavy. Two persons are required to remove/install leveling jack.

8. Working as a team, remove six nuts (11), washers (12) and screws (13) attaching each jack to mounting bracket. Stow hardware in holes in brackets hardware was removed from.

4-92. Loading Procedure (XM1063 Only) (cont'd)

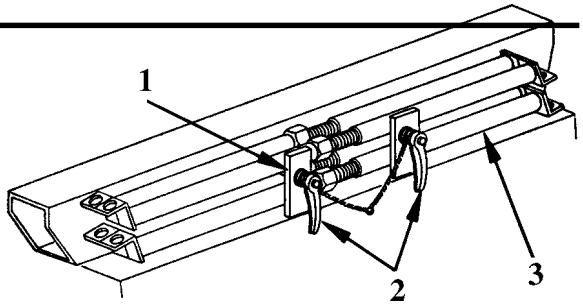

9. The rear lifting arms are located underneath van body at each side of semitrailer, between the rear wheels. Remove locking pin from each arm and swing arm out approximately 180 degrees. Lock in position with locking pin.

WARNING

Lifting/loading jacks (leveling jacks) must be kept perpendicular at all times to prevent injury to personnel.

Leveling jack is heavy. Two persons are required to remove/install leveling jack.

NOTE

Remaining steps in this procedure refer to leveling jacks as lifting/loading jacks.

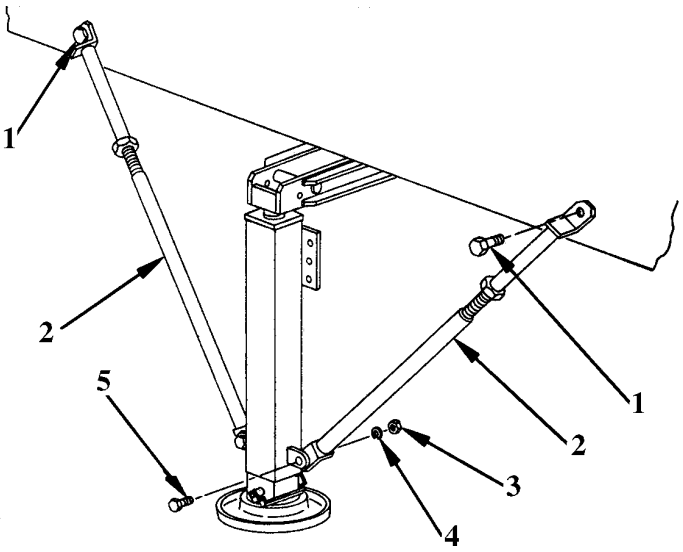

11. Set lifting/loading jacks in position under lifting arms. Align jacks and insert jack leg guide into hole in lifting arm. Position jack to keep in perpendicular to the ground.
12. Remove tie down rings located at each side of lifting/loading jack locations. Remove OVE screws (item 7, Appendix C) from interior of semitrailer.
13. Secure upper end of each lifting brace (2) to van body at tie down ring holes with OVE screws (1).
14. Match hole at lower end of each lifting brace (2) with hole at bottom of each jack. Adjust length of lifting brace as required by turning it counterclockwise to extend it or clockwise to shorten it.
15. Secure bottom of each brace (2) to each jack with screw (5), washer (4) and nut (3).

NOTE

Five nuts, washers and screws on each side of dolly were loosened in step 1. When removing or installing self-locking nuts, one person holds the nut stationary while the other person turns the screw or bolt.

16. Working as a team, remove five nuts, washers and screws from each side of dolly. Set hardware aside.

4-92. Loading Procedure (XM1063 Only) (cont'd)

WARNING

Personnel must stay clear of underside of van body until it is securely loaded on the K-Loader. Make sure jacks do not deviate from perpendicular position. If this occurs, stop lifting operation, reposition jacks and repeat lifting operation.

17. Working as a team, turn each crank of the lifting/loading jack clockwise to lift van body rear end (both sides at same time) 1/4 inch to 1/2 inch from dolly. Make certain jacks do not deviate from perpendicular position.
18. Roll dolly assembly toward rear to clear van body. Replace five nuts, washers and screws on each side of dolly in dolly frame for future use.
19. Position front of K-Loader to rear of van body. Make sure van body skid rails are aligned with rollers of K-loader.
20. Move K-Loader forward about three feet, stopping at rear lifting/loading jack braces. Working as a team, turn cranks of each jack counterclockwise at same time until van body rests on K-Loader.
21. Remove hardware attaching lifting braces and remove lifting braces. Place OVE hardware removed from tops of braces in bag. Place bag inside van body. Set aside hardware removed from bottom of lifting braces for installation of leveling jack braces (step 24).
22. Turn lifting/loading jack cranks counterclockwise to lower jacks until guide pins on jacks clear holes in lifting arms.
23. Pull locking pin from each lifting arm. Swing arm back to stowed position (about 180 degrees). Reinsert locking pin to secure lifting arm in stowed position underneath van body.

WARNING

Leveling jack is heavy. Two persons are required to remove/install leveling jack.

24. Reinstall jacks in position on dolly rear frame. Using the original hardware, secure jacks to mounting bracket. Secure braces to jacks and to mounting bracket. Use hardware set aside in step 21.
25. Move K-Loader forward, stopping about two feet from rear end of personnel ladder, stowed underneath van body.

4-92. Loading Procedure (XM1063 Only) (cont'd)

WARNING

Ladder is heavy. Two persons are required to remove/install ladder.

26. Pull out two tension lock pins (1). Hold rear end of ladder, lower it and aside it forward. Set ladder aside for later stowage. In interior of van body.

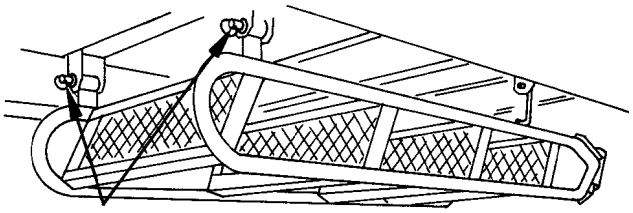

WARNING

Ladder is heavy. Two persons are required to remove/install ladder.

27. Pull out two tension lock pins (1). Hold rear end of ladder, lower it and aside it forward. Set ladder aside for later stowage. In interior of van body.

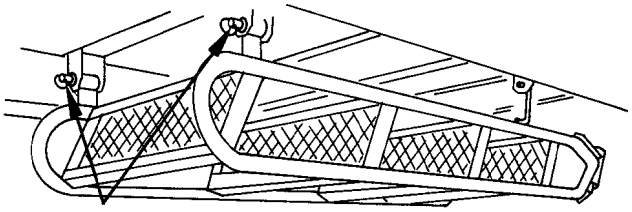

28. Move K-Loader forward, stopping about two feet from rear landing gear braces.

NOTE

When removing or installing self-locking nuts, one person holds the nut stationary while the other person turns the screw or bolt.

29. Working as a team, remove nuts (1), washers (2) and screws (3) from center brace (9) of each landing gear leg. Set braces aside. Reinstall nuts, washers and screws in holes of center brace.

WARNING

Landing leg is heavy. Two persons are required to remove/install landing leg.

30. Working as a team, remove nuts (6), washers (5) and screws (4) attaching mounting brackets (7) to van body. Separate both landing gears, together with the attached brackets, from van body. If necessary, turn cranks counterclockwise to raise leg to clear van body.

4-92. Loading Procedure (XM1063 Only) (cont'd)

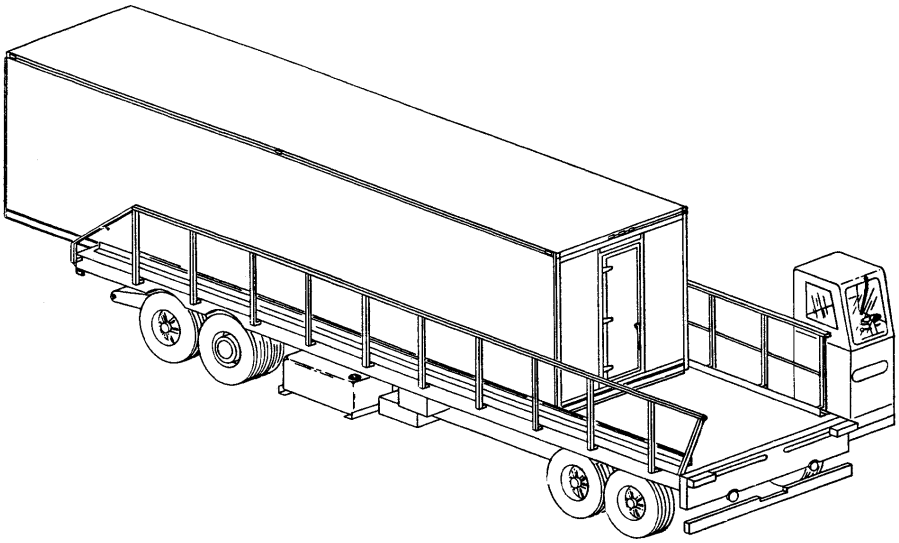

31. Move K-Loader forward until entire van body rests on K-Loader.
32. Disconnect intervehicular electrical cable from receptacle in front cover of resistor box.
33. Raise gladhand covers and disconnect intervehicular air hoses from gladhands located at each side of resistor box on front of van body.
34. Remove towing vehicle.
35. Stow landing gear center braces (4) in center dolly frame, using the original hardware.
36. Remove landing gear stowage retainers (1) from stowage brackets on dolly. Position left landing gear to front of dolly, right landing gear to rear of dolly. Align holes in landing gear mounting brackets with holes in dolly frame and secure with original hardware. Install stowage retainers (1) and secure with washer (2) and nut (3).
37. Set lifting/loading braces in position for stowing on front dolly. Secure with stowage brackets.

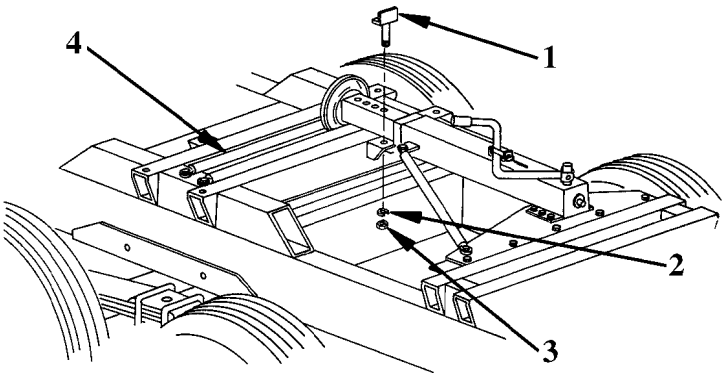

WARNING

Ladder is heavy. Two persons are required to remove/install ladder.

38. Stow personnel ladder in interior of van body.

4-93. Unloading Procedure (XM1063 Only)

This task covers:

Unloading procedure

Initial Setup:

Tools/Test Equipment:
9/16 inch allen wrench (1)
3/4 inch deep well socket, 3/4 inch drive (1)
1-1/8 inch deep well socket, 3/4 inch drive (1)
1-1/8 inch combination wrench (1)
15/16 inch deep well socket, 3/4 inch drive (1)
15/16 inch combination wrench (1)
1-11/16 inch socket, 3/4 inch drive (1)
8 inch to 10 inch socket extension, 1/2 inch drive (1)
Ratchet, 1/2 inch drive (1)
Ratchet, 3/4 inch drive (1)
3/4 inch combination wrench (1)
18 inch drift pin (1)
Tanger bar (1)

Equipment Conditions:

Materials/ Supplies:

Personnel required: Two

Unloading procedure

1. Unload van body from aircraft to K-Loader. Make sure area landing gears were removed from is accessible for reinstallation.

WARNING

Van body must be secured prior to movement of K-Loader to prevent unsafe movement and possible injury to personnel.

2. Attach towing vehicle to van body.

WARNING

Landing leg is heavy. Two persons are required to remove/install landing leg.

3. Remove landing gear legs and center braces from stowed position on dolly frame. Working as a team, attach mounting brackets with attached legs and secure with existing hardware.
4. Position center braces and secure with existing hardware.
5. Turn both cranks clockwise at the same time and lower legs to ground.

4-93. Unloading Procedure (XM1063 Only) (cont'd)

WARNING

Ladder is heavy. Two persons are required to remove/install ladder.

6. Move K-Loader to rear until it clears area of personnel ladder stowage. Remove personnel ladder from interior of van body and stow in brackets underneath van body.
7. Move K-Loader to rear until it clears area to rear of rear braces of lifting/loading jacks.
8. Pull lock pin from each rear lifting arm and swing each arm out approximately 180 degrees. Reinsert pin to lock each arm in position.

NOTE

To remove leveling jacks from rear of dolly, do steps 9 through 12.

9. Release pin (8) securing each crank (9) in stowage bracket (10) on leg. Place crank in operating position. Turn each clockwise until bottom of drop leg (7) contacts ground to support leg only, not van body. Return crank to stowed position and secure with pin (8).
10. Working as a team, remove six nuts (11), washers (12) and screws (13) attaching each jack to mounting bracket. Stow hardware in holes in brackets hardware was removed from.
11. The rear lifting arms are located underneath van body at each side of semitrailer, between the rear wheels. Remove locking pin from each arm and swing arm out approximately 180 degrees. Lock in position with locking pin.
12. The four lifting/loading jack braces (3) are stowed on front of dolly. Turn the two handles (2) counterclockwise and remove two brackets (1) securing braces. Remove the four braces (3).

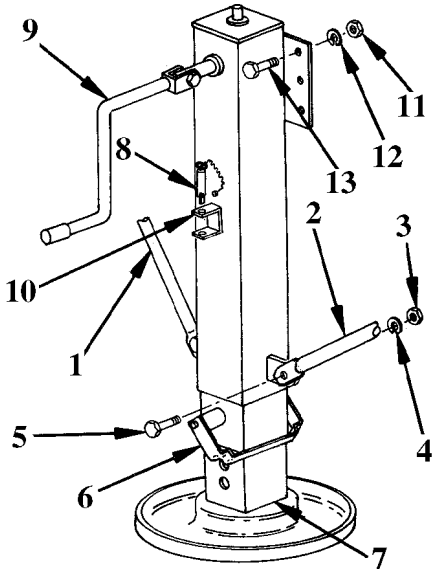

WARNING

Landing leg is heavy. Two persons are required to remove/install landing leg.

13. Set jacks in position as lifting/loading jacks under each lifting arm.
14. Align jacks and insert jack guides into holes in lifting arms. Make sure jacks are perpendicular to ground.
15. Remove four lifting braces from stowage on front of dolly.
16. Secure upper end of each lifting brace (2) to van body at tie down ring holes with OVE screws (1).

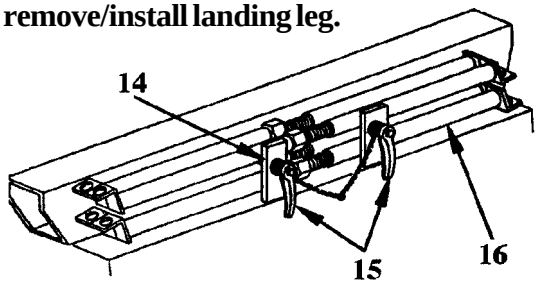

4-93. Unloading Procedure (XM1063 Only) (cont'd)

17. Match hole at lower end of each lifting brace (2) with hole at bottom of each jack. Adjust length of lifting brace as required by turning it counterclockwise to extend it or clockwise to shorten it.
18. Secure bottom of each brace (2) to each jack with screw (5), washer (4) and nut (3).

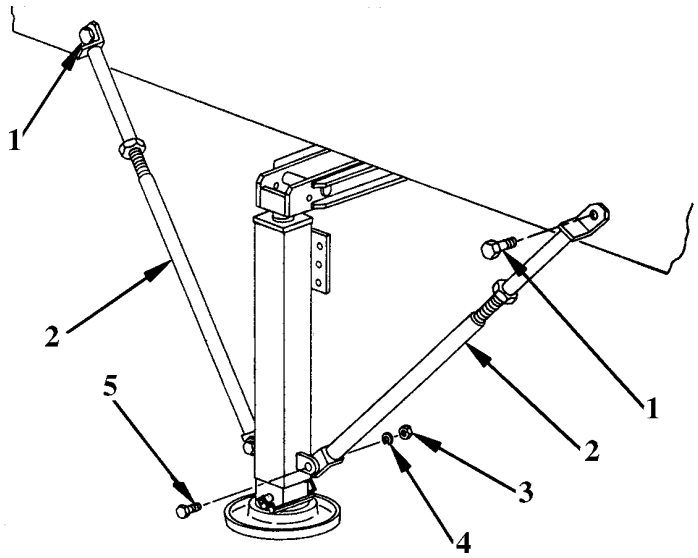

WARNING

Make certain lifting jacks are perfectly straight. If shifting occurs, stop operation at once and reposition lifting jacks.

19. Working as a team, turn jack cranks clockwise to raise van body rear end (both sides at same time) to a height permitting installation of the dolly from rear.
20. Remove K-Loader.
21. Remove dolly attaching hardware from holes in dolly frame.
22. Insert dolly into position from the rear. Lower rear end of van body toward dolly. Make sure holes in dolly match holes in van body. Working as a team, secure dolly with existing hardware.
23. Remove lifting jack braces and stow braces on front of dolly. Set aside hardware removed from bottom of braces for reinstallation of leveling jack braces. Place OVE screws in interior of van body.

WARNING

Leveling jack is heavy. Two persons are required to remove/install leveling jack.

24. Turn cranks of lifting/loading jacks counterclockwise to lower legs and clear guides from holes in lifting arms. Remove jacks. Install as leveling jacks at rear of dolly. Reinstall braces using existing hardware.
25. Pull lock pins from lifting arms, swing arms inward 180 degrees and lock in position with lock pins.

4-93. Unloading Procedure (XM1063 Only) (cont'd)

26. Remove release tool (4) from each air chamber and stow on tool holder on air chamber.
27. Detach towing vehicle.
28. Remove tie down rings. Place them in bags and store inside van body.
29. Install plastic plugs in tie down ring holes.
30. Connect electrical connector on left side of dolly.
31. Connect front and rear brake lines.

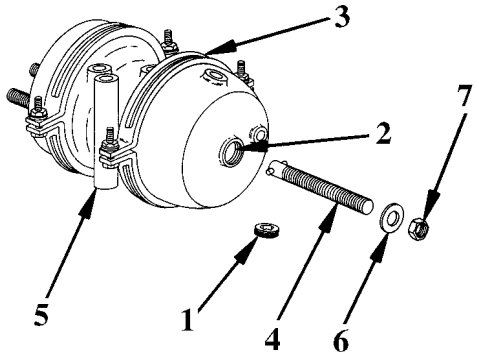

CHAPTER 5
INTERMEDIATE DIRECT SUPPORT AND INTERMEDIATE GENERAL SUPPORT MAINTENANCE INSTRUCTIONS

Section I. REPAIR PARTS; SPECIAL TOOLS; TEST, MEASUREMENT AND DIAGNOSTIC EQUIPMENT (TMDE) AND SUPPORT EQUIPMENT

5-1. General

This chapter describes intermediate direct support and intermediate general support maintenance tasks to be performed on the XM1063 and M129A4 semitrailers.

5-2. Common Tools and Equipment

Common tools and equipment are issued to intermediate direct support and intermediate general support maintenance personnel for maintaining the XM1063 and M129A4 semitrailers. Common tools and equipment should not be used for purposes other than those prescribed and should be properly stored when not in use. Refer to the Modified Table of Organization and Equipment (MTOE) for authorized common tools and equipment applicable to your unit.

5-3. Special Tools, TMDE and Support Equipment

Special tools and TMDE authorized for the XM1063 and M129A4 semitrailers are listed in Appendix B. Support equipment needed to operate the semitrailer is limited to the towing vehicle.

5-4. Repair Parts

Repair parts are listed and illustrated in Appendix F of this manual.

Section II. AXLE ASSEMBLY MAINTENANCE PROCEDURES

5-5. General

Generally, axle assemblies will not be removed unless inspection shows a need for repair or replacement. For inspection purposes, remove wheels (para. 3-4) and hub and brake drums (para. 4-48 (XM1063 or para. 4-49 (M129A4)).

5-6. Axle Assembly Maintenance

This task covers:

a. Removal
b. Cleaning
c. Inspection and repair
d. New axle assembly
e. Installation

Initial Setup:

Tools/Test Equipment:

General Mechanic's Tool Kit (item 1, Appendix B)
Automotive Shop Set (item 2, Appendix B)

Materials/Supplies:

Dry cleaning solvent (item 3, Appendix E)

Brush (item 15, Appendix E)

Equipment Conditions:

Air reservoir drain cocks open (para. 2-14).
Wheels removed (para. 3-4)

Hubs and brake drums removed (para. 4-52)

(XM1063) or para. 4-53 (M129A4)
Slack adjuster removed with yoke pin

(XM1063) (para. 4-50)
Brake air chambers removed (para. 4-46)

Personnel Required: Two

WARNING

Weight of semitrailer must be supported by leveling jacks or by blocking or support stands placed under rear corners of frame throughout operation.

a. Removal.

1. Position semitrailer on level surface with front end resting on landing gear legs.
2. Extend leveling jack legs enough to contact ground and provide support during removal and installation operations.
3. Support axles with jacks.
4. Remove two nuts (1) and four washers (2) from each axle U-bolt (3) and remove U-bolts.
5. Lower axle assembly and remove from under semitrailer.

5-6. Axle Assembly Maintenance (cont'd)

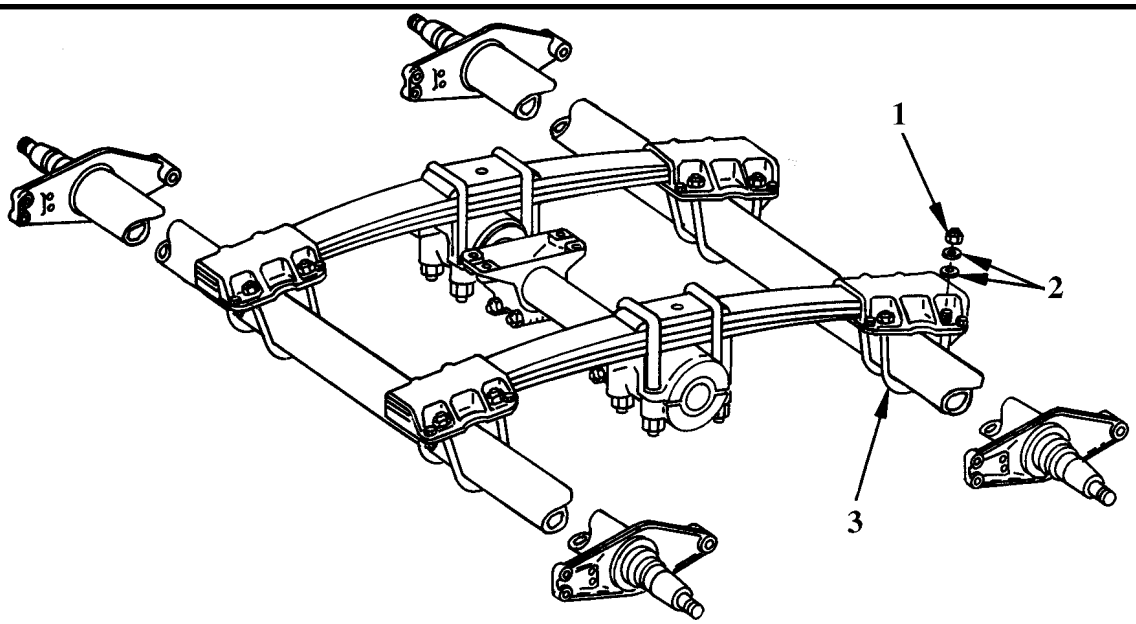

b. Cleanin

1. Remove dirt with water and brush (item 15, Appendix E).

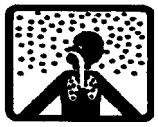


WARNING

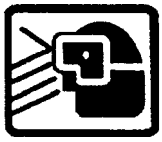


Dry cleaning solvent (P-D-680) is toxic and flammable. Avoid prolonged breathing of vapors. Avoid skin contact. Use only in a well-ventilated area. Keep away from open flame. Flash point of solvent is 138° F (50° C).

2. Remove grease from spindle of axle and wheel retaining parts with dry cleaning solvent (item 3, Appendix E).

c. Inspection and repair

1. Check threads of axle spindle for wear, crossed threads or other damage.
2. Using fine file, remove burrs, or hand chase threads if necessary.
3. Check axle spindle for bend. Indications of a bent axle spindle are binding bearings which cannot be adjusted properly and extremely uneven wear of brake linings. Replace axle, if spindle is defective.
4. Check for damaged paint and repaint where necessary.

5-6. Axle Assembly Maintenance (cont'd)

d. New axle assembly

1. Refer to Appendix G for locational dimensions of the new spring seats.
2. Be certain spring seats fit axle properly. If necessary, grind seats to ensure that both seats fit properly and are horizontal and parallel.
3. Make sure that spring seats are level, parallel, an equal distance from center of axle and the same distance from the brake flanges.
4. Tack weld seats in place and recheck.
5. Axle should be aligned in relation to semitrailer kingpin.

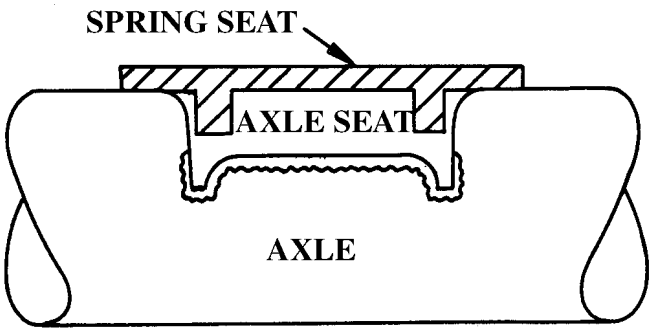

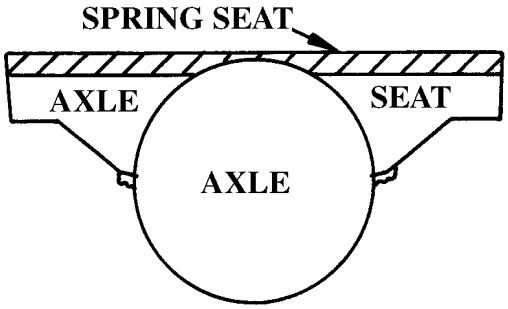

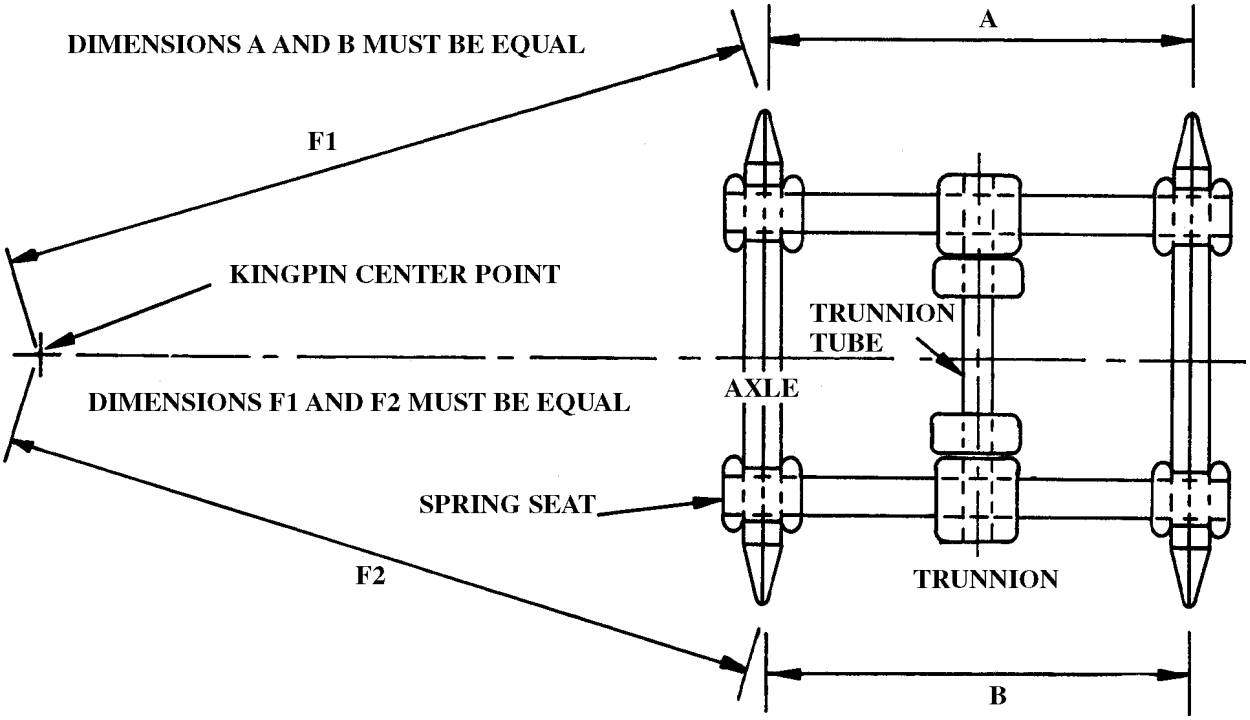

6. Measure distance from kingpin to center line of the spindles on front axle, as shown above.
7. After aligning front axle, tighten U-bolt nuts (1) and end cap nuts (2) on that axle only.

5-6. Axle Assembly Maintenance (cont'd)

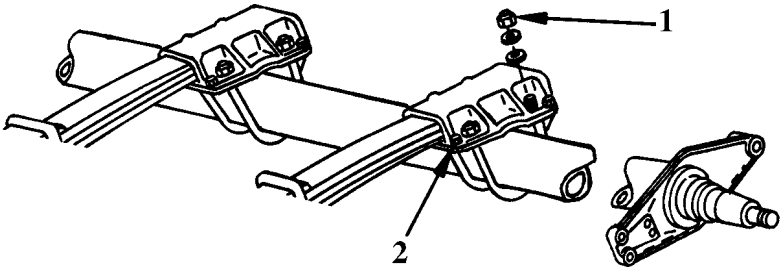

8. Align rear axle with front axle by measuring between spindles.
9. Tighten rear axle U-bolt nuts and end cap nuts.
10. Recheck alignment of front axle with kingpin. Recheck alignment of rear axle with front axle.
11. Tighten XM1063 U-bolt nuts to a torque of 300 lb-ft (406.8 Nm) dry or 220 lb-ft (298.3Nm) lube. Tighten M129A4 U-bolt nuts to a torque of 290 -300 lb-ft (393.24 - 406.8 Nm) dry or 210 - 220 lb-ft (284.76 - 298.3Nm) lube.

e. Installation

1. Position axle on dolly.
2. Place support under axle.
3. Insert four U-bolts (3) through two spring seats (4) on axle (5). Secure each U-bolt (3) with two nuts (1) and four washers (2).
4. Tighten U-bolt nuts to a torque of 300 lb-ft (406.8 Nm) dry or 220 lb-ft (298.3 Nm) lube.

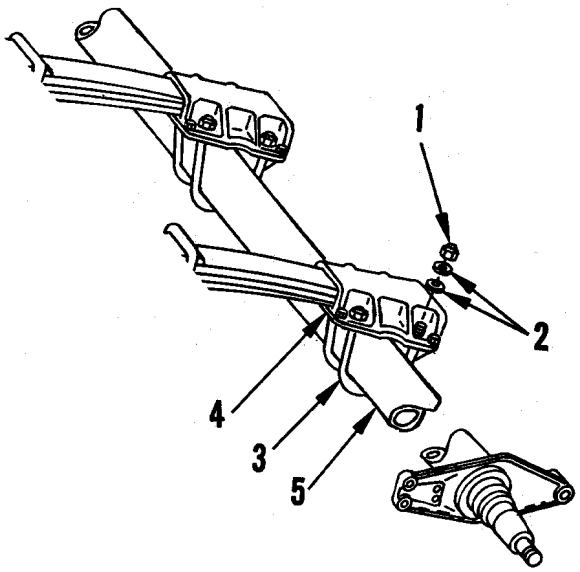

Follow-on maintenance:

Install brake air chambers (para. 4-46).
Install slack adjusters (para. 4-50 (XM1063).
Install hubs and brake drums (para. 4-52 (XM1063) or para. 4-53 (M129A4)).
Install wheels (para. 3-4).
Close air reservoir drain cocks (para. 2-14).
Remove blocking and support equipment.

Section III. SUSPENSION SYSTEM MAINTENANCE PROCEDURES

5-7. Spring

This task covers:

a. Removal
b. Cleaning and inspection
c. Installation

Initial Setup:

Tools/Test Equipment:
General Mechanic's Tool Kit (item 1, Appendix B)
Automotive Shop Set (item 2, Appendix B)

Materials/Supplies:
Brush (item 15, Appendix E)
Dry cleaning solvent (item 3, Appendix E)

Equipment Conditions:
Wheels removed (para. 3-4).

Personnel Required: Two

a. Removal

1. Position semitrailer on level surface with front end resting on landing gear legs.
2. Extend leveling jack legs enough to provide support during removal and installation procedures.
3. Place jack under each axle just enough to support the weight of the axle.
4. Support semitrailer with support stands or blocking equipment.

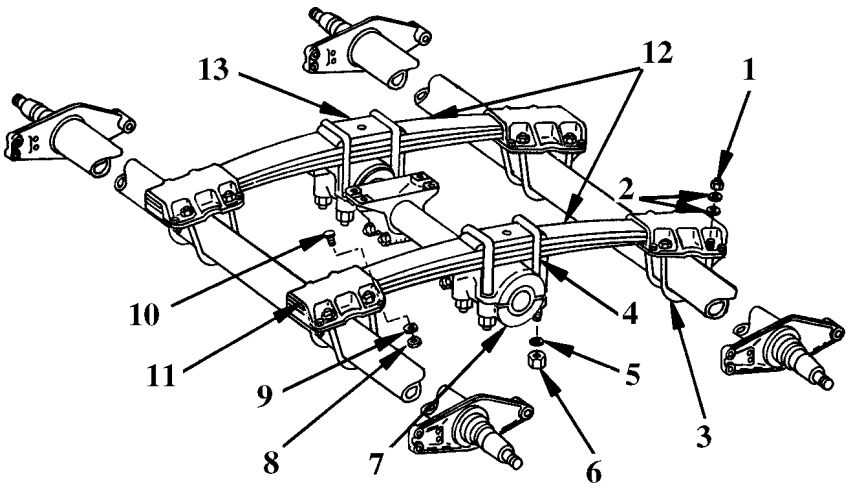

5. Remove two nuts (1) and four washers (2) from each axle U-bolt (3). Remove axle U-bolts.
6. Remove eight nuts (8), washers (9) and screws (10) and remove two end caps (11).

5-7. Spring (cont'd)

7. Remove two nuts (6) and washers (5) from each trunnion U-bolt (4). Remove lower hub (7). Lift up U-bolts (4) and remove wear plate (13).
8. Lift up spring ends and slide out spring (12).
9. To remove trunnion U-bolts (4), rotate trunnion hub to side and remove U-bolts.

b. Cleaning and inspection

1. Remove dirt with water and brush (item 15, Appendix E).

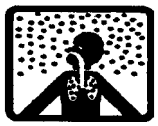

WARNING
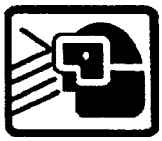


Dry cleaning solvent (P-D-680) is toxic and flammable. Avoid prolonged breathing of vapors. Avoid skin contact. Use only in a well-ventilated area. Keep away from open flame. Flash point of solvent is 138° F (50° C).

2. Remove grease with dry cleaning solvent (item 3, Appendix E).
3. Inspect for loose, missing or damaged hardware.
4. Inspect spring for cracks, breaks and excessive wear.
5. Inspect for rust or corrosion.
6. Replace spring if defective or excessive wear is apparent.

c. Installation

1. Position spring on axle.
2. Position end caps (11) and secure with eight screws (10), washers (9) and nuts (8). Tighten nuts to a torque of 180 lb-ft (244 Nm) dry or 130 lb-ft (176.3 Nm) lube.
3. Install axle U-bolts (3) and secure each U-bolt with two nuts (1) and four washers (2). Tighten nuts to a torque of 300 lb-ft (406.8 Nm) dry or 220 lb-ft (298.3 Nm) lube.
4. Install trunnion U-bolts (4), insert lower hub (7) in position and secure with nuts (6) and washers (5). Tighten nuts to a torque of 880 lb-ft (1193.3 Nm) dry or 660 lb-ft (895 Nm) lube.
5. After installation of new spring, axle should be aligned in relation to semitrailer kingpin (para. 5-6).

Follow-on maintenance:

- Install wheels (para. 3-4).

5-8. Sleeve Bushing

This task covers:

a. Removal
b. Inspection
c. Installation

Initial Setup:

Tools/Test Equipment:
General Mechanic's Tool Kit (item 1, Appendix B)
Automotive Shop Set (item 2, Appendix B)

Equipment Conditions:
Wheels Removed (para. 3-4)

Materials/Supplies:
Silicone lubricant (item 11, Appendix E)

a. Removal

1. Position semitrailer on level surface with front end resting on landing gear legs.
2. Extend leveling jacks enough to relieve each tire of ground contact and provide support during removal and installation procedures.
3. Place jacks under both axles and raise van body just enough to take weight off spring.
4. Block or support semitrailer. Remove wheels (para. 3-4).

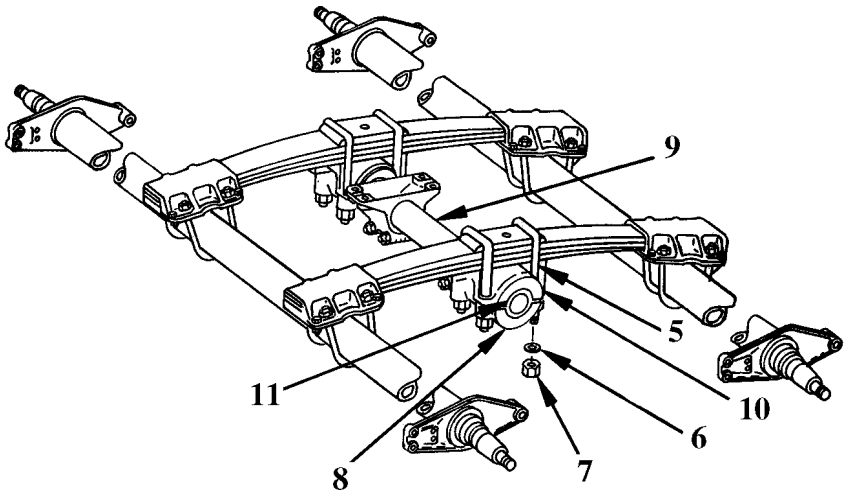

5. Remove four nuts (7) and washers (6) securing trunnion U-bolts (5). Lift up U-bolts and remove lower hub (8).
6. Lower van body, with axles on jacks, to clear springs and upper hub (10). Remove sleeve bushing (11).

5-8. Sleeve Bushing (cont'd)

b. Inspection

Check bushing for wear and deterioration. Replace defective bushing.

c. Installation

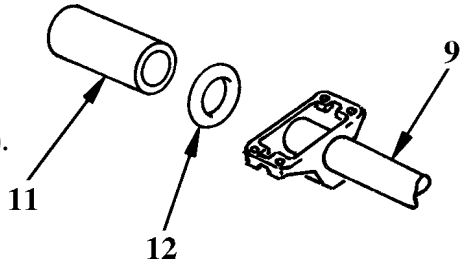

1. Lubricate inner surface of sleeve bushing (11) with silicone lubricant (item 11, Appendix E) to ease installation of bushing.
2. Slide washer (12) and sleeve bushing (11) on trunnion tube (9).
3. Raise van body, with axles on jacks and push down trunnion U-bolts (5) to allow for installation of lower hub (8).
4. Position lower hub (8) on trunnion U-bolts (5) and secure with four nuts (7) and washers (6).
5. Tighten nuts to a torque of 880 lb-ft (1193.3 Nm) dry or 660 lb-ft (895 Nm) lube.

Follow-on maintenance:

- Install wheels (para. 3-4).

5-9. Trunnion Tube

This task covers:

a. Removal
b. Cleaning and inspection
c. Installation

Initial Setup:

Tools/Test Equipment:

General Mechanic's Tool Kit (item 1, Appendix B)

Automotive Shop Set (item 2, Appendix B)

Equipment Conditions:

Wheels Removed (para. 3-4)

Materials/Supplies:

Dry cleaning solvent (item 3, Appendix E)
Brush (item 15, Appendix E)

Personnel Required: Two

a. Removal

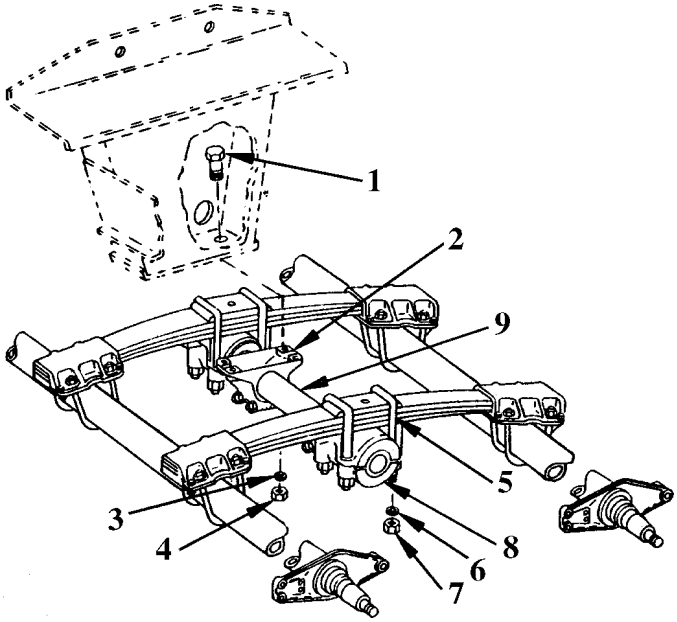

1. Position semitrailer on level surface with front end resting on landing gear legs.
2. Extend leveling jacks enough to relieve each tire of ground contact and provide support during removal and installation procedures.
3. Place jacks under both axles and raise van body just enough to take weight off spring.
4. Block or support semitrailer. Remove wheels (para. 3-4).
5. Remove eight nuts (4), washers (3) and screws (1) securing trunnion hangers (2) to mounting bracket.
6. Support trunnion tube (9). Remove eight nuts (7) and washers (6) securing trunnion U-bolts (5).
7. Lift up U-bolts (5) and remove lower hub (8). Remove trunnion tube.

b. Cleaning and inspection

1. Remove dirt with water and brush (item 15, Appendix E).

5-9. Trunnion Tube (cont'd)


WARNING

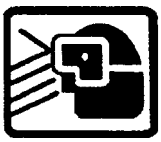


Dry cleaning solvent (P-D-680) is toxic and flammable. Avoid prolonged breathing of vapors. Avoid skin contact. Use only in a well-ventilated area. Keep away from open flame. Flash point of solvent is 138° F (50° C).

2. Remove grease with dry cleaning solvent (item 3, Appendix E).
3. Inspect trunnion tube for cracks, breaks, bends and excessive wear.
4. Inspect for rust, corrosion and marred paint. Clean, treat, prime and paint as required.
5. Replace defective trunnion tube.

c. Installation

1. Position trunnion tube (9) on suspension.
2. Raise van body, with axles on jacks and push down trunnion U-bolts (5) to allow for installation of lower hub (8).
3. Position lower hub (8) on trunnion U-bolts (5) to allow for installation of lower hub (8).
4. Tighten nuts (7) to a torque of 880 lb-ft (1193.3 Nm) dry or 660 lb-ft (895 Nm) lube.
5. Secure trunnion hangers (2) to mounting bracket with nuts (4), washers (3) and screws (1).

Follow-on maintenance:

- Install wheels (para. 3-4).

5-10. Rubber Pad

This task covers:

a. Removal
b. Inspection
c. Installation

Initial Setup:

Tools/Test Equipment:
General Mechanic's Tool Kit (item 1, Appendix B)

Automotive Shop Set (item 2, Appendix B)

Equipment Conditions:
Wheels Removed (para. 3-4)

Materials/Supplies:

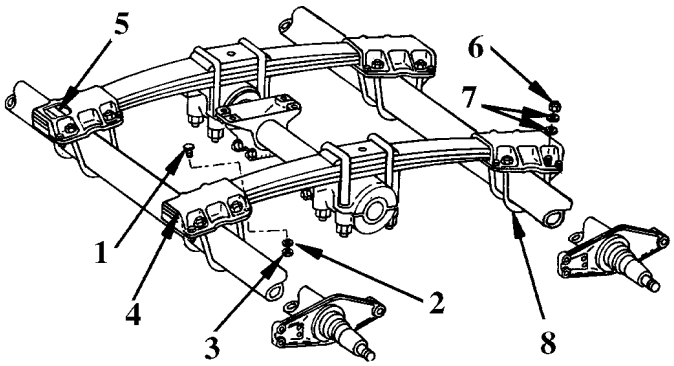

a. Removal

1. Remove four nuts (6) and eight washers (7) securing two axle U-bolts (8).
2. Remove four nuts (3), washers (2) and screw securing end cap (4).
3. Remove end cap and rubber pads (5).

b. Inspection

Inspect rubber pads for excessive wear and deterioration. Replace defective pads.

c. Installation

1. Position end cap (4).
2. Secure end cap with four screws (1), washers (2) and nuts (3). Tighten nuts to a torque of 180 lb-ft (244.0 Nm) dry or 130 lb-ft (176.3 Nm) lube.
3. Install axle U-bolts (8) and secure with four nuts (6) and eight washers (7). Tighten nuts to a torque of 300 lb-ft (406.8 Nm) dry or 220 lb-ft (298.3 Nm) lube.

Follow-on maintenance:

- Install wheels (para. 3-4)

5-11. Brake Drum

This task covers:

a. Repair

b. Repair standards

Initial Setup:

Tools/Test Equipment:
General Mechanic's Tool Kit (item 1, Appendix B)
Automotive Shop Set (item 2, Appendix B)

Equipment Conditions:
Brake drum removed from semitrailer (para. 4-52 or 4-53)

Materials/Supplies:

a. Repair

1. If inspection (para. 4-52 (XM1063) or para. 4-53 (M129A4)) shows brake drum to be out-of-round or excessively scored, rebore, removing as little metal as necessary to true friction surface.
2. After boring, check that brake drum meets the requirements of repair standards (below).
3. If refinishing requires the removal of more than 1/16 inch of material (1/8 inch in diameter), replace brake drum.
4. The repair and rebuild standards included herein give the minimum, maximum and key clearance of new or rebuilt parts. They also give wear limits which indicate that the point to which a part or parts may be worn before replacement, in order to give maximum service with minimum replacement.

b. Repair standards

Item and point of measurement	Size and fit of new parts			Wear limits
	Illustration letter ref.	Min.	Max.	
Brake drum				
Inside diameter	A	16.495	16.505	16.625
Concentricity of inside diameter with outside diameter	B	Total Reading	Indicator 0.004	*

(* Indicates that part should be replaced when worn beyond the limits given in "size and fit of new parts" column.).

1. Normally, all parts which have not been worn beyond the dimensions shown under wear limits in the above table, or damaged by corrosion, will be approved for service. Points of measurement for repair standards are shown in the illustration.

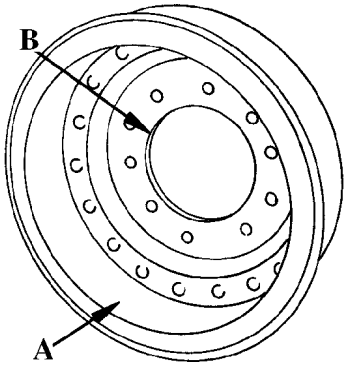

Follow-on maintenance:

- Install brake drum (para. 4-52 or 4-53)

5-12. Relining Brake Shoes

This task covers:

a. Removal
b. Cleaning and painting
c. Installation

Initial Setup:

Tools/Test Equipment:
Feeler gage

Equipment Conditions:
Brake shoes removed (para. 4-55).

Materials/Supplies:
Dry cleaning solvent (item 3, Appendix E)
Brush (item 15, Appendix E)
Enamel, forest green (item 20, Appendix E)
Brake lining

NOTE

This procedure applies to all brake shoes. One brake shoe is described.

a. Removal

1. Remove 24 rivets (1) from brake shoe (2).
2. Remove and discard brake lining (3).

b. Cleaning and painting

1. Clean brake shoe thoroughly. Use a stiff bristle brush (item 15, Appendix E) and water to remove mud.

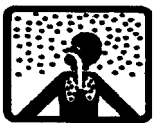


WARNING

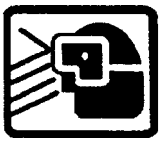


Dry cleaning solvent (P-D-680) is toxic and flammable. Avoid prolonged breathing of vapors. Avoid skin contact. Use only in a well-ventilated area. Keep away from open flame. Flash point of solvent is 138° F (50° C).

2. Remove grease and oil from brake shoe using dry cleaning solvent (item 3, Appendix E). Dry thoroughly.
3. Repaint brake shoe with forest green enamel (item 20, Appendix E). Allow paint to dry thoroughly.

5-12. Relining Brake Shoes (cont'd)

c. Installation

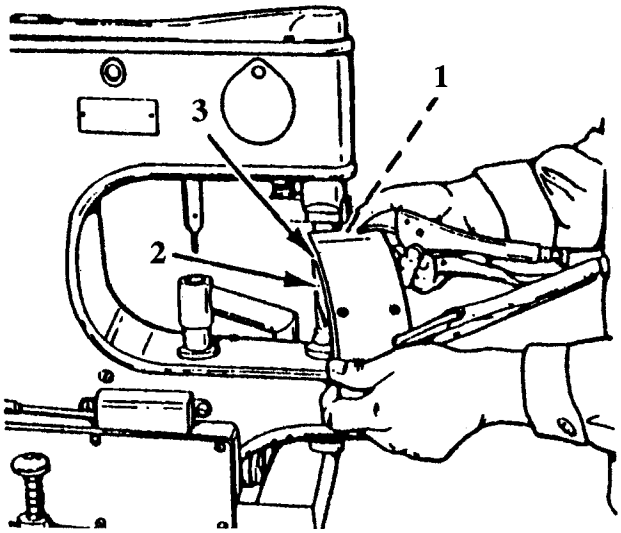

1. Position new brake lining (3) on brake shoe (2).
2. Install rivets (1) in the two center holes of brake shoe (2) and brake lining (3) to secure brake lining.
3. Install remaining rivets (1) in brake shoe lining to secure it to brake shoe (2).
4. Check contact of brake lining with brakeshoe. A 0.010-inch (0.25 cm) feeler gage should not enter between brake shoe and brake lining at any point.

Follow-on maintenance:

- Install brake Shoe (para.4-55).

5-13. Kingpin

Repair or replacement of kingpin or supporting structure is authorized at Special Repair Activity (SRA).

Section IV. LANDING GEAR/LEVELING JACK REPAIR PROCEDURES

5-14. Landing Leg Repair

This task covers:

a. Removal
b. Cleaning and inspection
c. Installation

Initial Setup:

Tools/Test Equipment:
General Mechanic's Tool Kit (item 1, Appendix B)

Equipment Conditions:
Landing leg removed (para. 4-58).

Materials/Supplies:
Brush (item, Appendix E)
Bracket (Appendix G)
Chain (Appendix G)

a. Removal

NOTE

For ease of installation, mark position of chain on landing leg prior to removal.

1. Remove clip (1).
2. Mark position and remove chain (2).

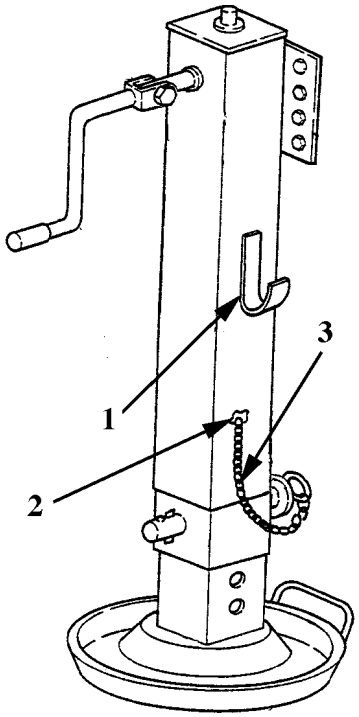

M129A4 Shown

b. Cleaning and inspection

1. Clean parts with brush and water.
2. Inspect parts for dents, warps, cracks, rust, corrosion or marred paint. Repair or replace defective parts.
3. Inspect gearbox for proper operation. Replace defective parts.
4. Inspect pins for bends, corrosion or other damage. Replace defective parts.
5. Lubricate in accordance with Appendix I, Lubrication Instructions.

c. Installation

NOTE

Weld all parts in accordance with TM 9-237.

1. Measure 1-1/2 in (3.81 cm) from bottom of leg and centered from side-to-side of leg. Mark position and weld clip (2) onto leg. position and weld clip (2) onto leg.
2. Position and weld new chain (2) onto leg.

Follow-on maintenance:

- Install landing leg (para. 4-58).

5-15. Landing Gear Channel and Bracket Repair (M129A4 Only)

This task covers:

a. Removal
b. Cleaning and inspection
c. Repair
d. Installation

Initial Setup:

Tools/Test Equipment:

Equipment Conditions:
Landing leg removed (para. 4-58).

Materials/Supplies:
Brush (item, Appendix E)
Channel (Appendix G)
Channel Bracket (Appendix G)

a. Removal

NOTE

For ease of installation, mark position of channel bracket on landing gear brace prior to removal.

1. Mark position and remove channel bracket (1) from mounting plate.
2. Mark position and remove channel bracket (2) from landing leg.

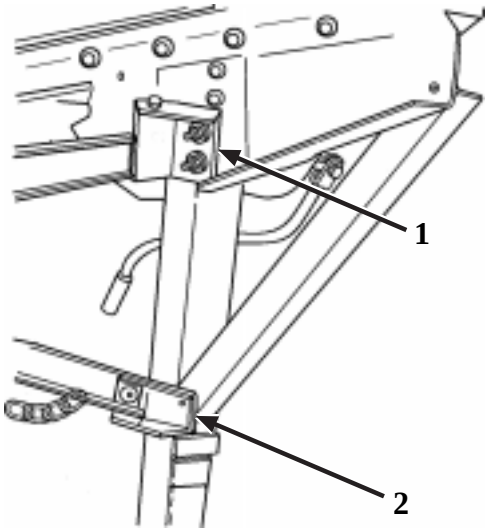

b. Cleaning and inspection

1. Clean parts with brush and water.
2. Inspect for dents, warps, cracks, rust, corrosion or marred paint. Repair or replace defective parts.

c. Repair

1. Fabricate new channel brackets in accordance with instructions in Appendix G.
2. Fabricate new channels in accordance with instructions in Appendix G.

d. Installation

NOTE
Weld in accordance with TM 9-237.

1. Position and weld new channel bracket (1) onto mounting plate.
2. Position and weld new channel bracket (2) onto landing leg.

Follow-on maintenance:

- Install landing leg (para.4-58).

5-16. Landing Gear Brace Repair (M129A4 Only)

This task covers:

a. Removal
b. Cleaning and inspection
c. Installation

Initial Setup:

Tools/Test Equipment:

Equipment Conditions:
Brace removed (para. 4-59).

Materials/Supplies:
Brush (item 15, Appendix E)
Chain (Appendix G)
Sand Plate (Appendix G)

a. Removal

NOTE

For ease of installation, mark position of chains prior to removal.

1. Remove sand plate chain (1) from brace.
2. Remove bolt (2), chain (3), two flat washers (4), lock washer (5) and nut (6).
3. Remove lever nut chain (7) from brace.

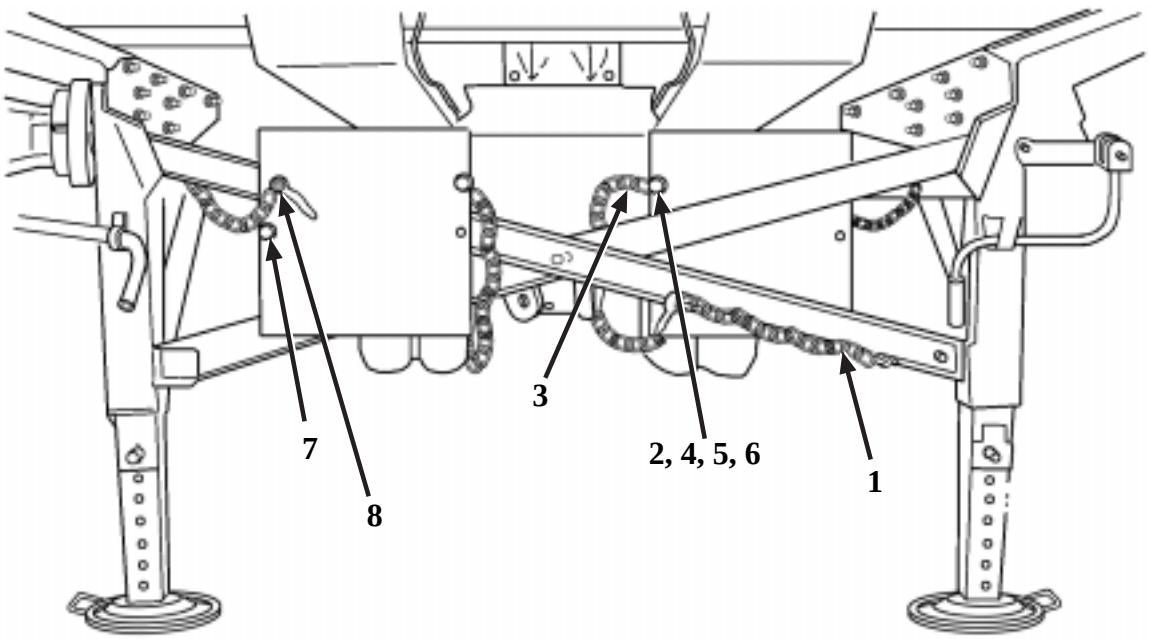

5-16. Landing Gear Brace Repair (M129A4 Only) (cont'd)

WARNING

Sand plate is heavy. Have an assistant support sand plate while lever nut assembly is removed.

4. Remove lever nut assembly (8).

b. Cleaning and inspection

1. Clean parts with brush and water.
2. Inspect for dents, warps, cracks, rust, corrosion or marred paint. Repair or replace defective parts.

c. Installation

WARNING

Sand plate is heavy. Have an assistant support sand plate while lever nut assembly is installed.

NOTE

Weld in accordance with TM 9-237.

1. Position sand plate and install lever nut assembly (8).
2. Weld lever nut chain (7) on brace.
3. Install bolt (2), chain (3), two flat washers (4), lock washer (5) and nut (6).
4. Install sand plate chain (1) on brace.

Follow-on maintenance:

- Install brace (para.4-59).

5-17. Leveling Jack Repair

This task covers:

a. Removal
b. Cleaning and inspection
c. Repair
d. Installation

Initial Setup:

Tools/Test Equipment:

Equipment Conditions:
Leveling jack removed (para. 4-58).

Materials/Supplies:
Brush (item 15, Appendix E)
Upper bracket chain (Appendix G)
Lower bracket chain (Appendix G)
Bracket (Appendix G)

a. Removal

NOTE

For ease of installation, mark position of chains and bracket prior to removal.

1. Mark position and remove upper bracket chain (1).
2. Mark position and remove lower bracket chain (2).

b. Cleaning and inspection

1. Clean parts with brush and water.
2. Inspect for dents, warps, cracks, rust, corrosion or marred paint. Repair or replace defective parts.

c. Repair

1. Fabricate new brace (3) in accordance with instructions in Appendix G.
2. Fabricate new chains in accordance with instructions in Appendix G.

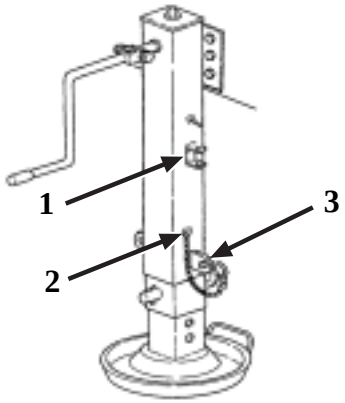

d. Installation

NOTE

Weld in accordance with TM 9-237.

1. Position and weld lower bracket chain (2).
2. Position and weld upper bracket chain (1).

Follow-on maintenance:

- Install leveling jack (para. 4-58).

Section V. TIRE MAINTENANCE

5-18. Tire Repair

Tire repair is covered in TM9-2610-200-14.

Section VI. FRAME AND BODY MAINTENANCE

5-19. Small Patch Repair

This task covers:

Repair

Initial Setup:

Tools/Test Equipment:
General Mechanic's Tool Kit (item 1, Appendix B)
Automotive Shop Set (item 2, Appendix B)

Equipment Conditions:
Semitrailer blocked for support.

Materials/Supplies:
Paint, Primer (item 22, Appendix E)
Rivet (P/N 38-106-02-16, 3/16)
Sealant, Sikaflex (item 21, Appendix E)
Aluminum Alloy (P/N 3004-H291)

Repair

NOTE

Frame repair is limited to small exterior patches. due to presence of foam insulation within semitrailer interior walls, replacement of panels is not authorized.

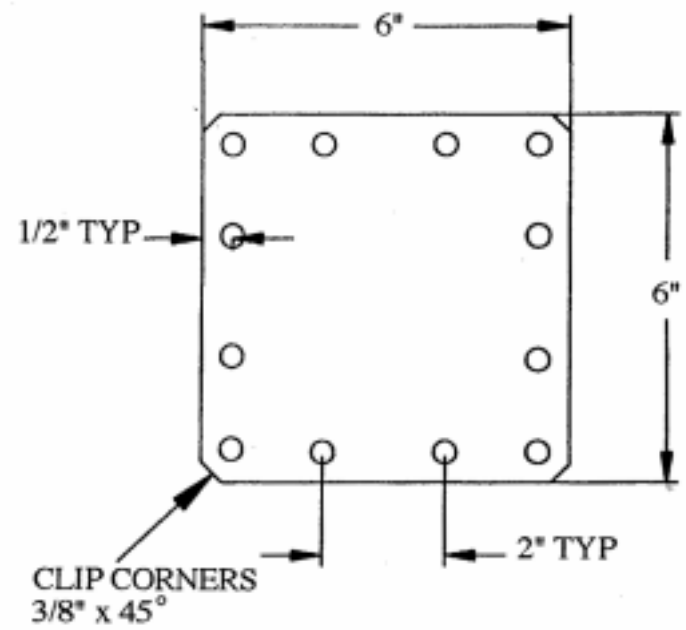

1. Cut aluminum alloy to .5 x 6 x6 inches (1.27 x 15.24 x 15.24 cm).
2. Clip corners 3/8 inches at 45o angle.
3. Drill 12 holes with diameter of 1/2" at 2 inch intervals.
4. Center patch over hole in semitrialer side sheet.
5. Drill sheet using patch holes as a template.
6. Apply sikaflex sealant to back of patch.
7. Position patch on semitrailer side sheet and secure with 12 rivets.
8. Touch up paint, as required.

Follow-on maintenance: None.

5-20. Exterior Vent Replacement

This task covers:

a. Removal

b. Installation

Initial Setup:

Tools/Test Equipment:

Equipment Conditions:
Semitrailer blocked for support.

Materials/Supplies:
Rivet
Exterior Vent (Appendix G)

a. Removal

NOTE

All exterior vents are removed/installed in the same manner. One is shown.

Remove 12 rivets (1) and exterior vent (2). Discard rivets and damaged vent.

b. Installation

1. Fabricate new exterior vent (2) in accordance with instructions in Appendix G.
2. Position vent (2) on exterior wall of semitrailer and secure with 12 rivets (1).

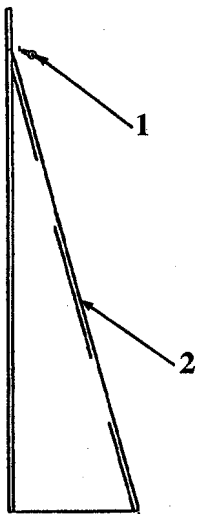

Follow-on maintenance: None.

APPENDIX A

REFERENCES

A-1. General

This appendix lists all forms, manuals, bulletins, and other publications that are referenced in this manual and/or apply to the operation of and to the Unit, Direct Support or General Support maintenance of the XM1063 or M129A4 semitrailer. DA PAM 25-30, Consolidated Index of Army Publications and Blank Forms, should be consulted frequently for the latest changes or revisions and for new publications relevant to material covered in this technical manual.

A-2. Forms

Refer to DA Pam 738-750, The Army Maintenance Management System (TAMMS), for instructions on the use of maintenance forms.

Recommended Changes to Publications and Blank Forms ..... DA Form 2028
Recommended Changes to Equipment Technical Publications ..... DA Form 2028-2
Organization Control Record for Equipment ..... DA Form 2401
Equipment Inspection and Maintenance Worksheet ..... DA Form 2404
Maintenance Request ..... DA Form 2407
Equipment Log Assembly (Records) ..... DA Form 2408
Preventive Maintenance Schedule and Record ..... DD Form 314
Processing and Deprocessing Record for Shipment, Storage and Issue of Vehicles and Spare Engines ..... DD Form 1397
Report of Discrepancy (ROD) ..... SF Form 364
Product Quality Deficiency Report ..... SF Form 368

A-3. Field Manuals

NBC Contamination Avoidance ..... FM 3-3
NBC Protection ..... FM 3-4
NBC Decontamination ..... FM 3-5
Operation and Maintenance of Ordnance Materiel in Cold Weather (0 Degrees F to Minus 65 Degrees F) ..... FM 9-207
First Aid for Soldiers ..... FM 21-11
Manual for the Wheeled Vehicle Driver ..... FM 21-305

A-3. Field Manuals (cont'd)

Railway Operating and Safety Rules ..... FM 55-21
Camouflage ..... FM 5-20
Basic Cold Weather Manual ..... FM 31-70
Northern Operations ..... FM 31-71
Army Motor Transport Units and Operators ..... FM 55-30
Desert Operations ..... FM 90-3
Mountain Operations (How to Fight) ..... FM 90-6

A-4. Technical Manuals

Inspection, Care and Maintenance of Antifriction Bearings ..... TM 9-214
Operator's Manual for Welding Theory and Application ..... TM 9-237
Deepwater Fording of Ordnance Materiel ..... TM 9-238
Materials Used for Cleaning, Preserving, Abrading and Cementing
Ordnance Materiel and Related Materials, including Chemicals ..... TM 9-247
Operator's, Organizational, Direct Support and General Support Maintenance Manual for Care
Maintenance, Repair and Inspection of Pneumatic Tires And Inner Tubes ..... TM 9-2610-200-14
Painting Instructions for Field Use ..... TM 43-0139
Procedures for Destruction of Tank-Automotive Equipment to
Prevent Enemy Use ..... TM 750-244-6
Storage and Materials Handling ..... TM 743-200-1
Railcar Loading Procedures ..... TM 55-601

A-5. Pamphlets And Bulletins

Consolidated Index of Army Publications and Blank Forms ..... DA Pam 25-30
Using Unit Supply System (Manual Procedures) ..... DA Pam 710-2-1
The Army Maintenance Management System (TAMMS) ..... DA Pam 738-750
Equipment Improvement Report and Maintenance Digest (U.S. Army Tank-
automotive and Armaments Command) Tank and Automotive Equipment ..... TB 43-0001-39 Series
Color, Marking, and Camouflage Painting of Military Vehicles,
Construction Equipment and Materials Handling Equipment ..... TB 43-0209
Tactical Wheeled Vehicles: Repair of Frames ..... TB 9-2300-247-30
Maintenance in the Desert ..... TB 43-0239
Description, Use, Bonding Techniques, and Properties of Adhesive ..... TB ORD 1032

A-6. Other Publications

Environmental Protection and Enhancement ..... AR 200-1
Army Logistics Readiness and Sustainability ..... AR 700-138
Reporting of Product Quality Deficiencies Across Component Lines ..... AR 702-7
Army Medical Department Expendable/Durable Items ..... CTA 8-100
Expendable/Durable Items (Except Medical, Class V,
Repair Parts and Heraldic Items) ..... CTA 50-970

APPENDIX B
MAINTENANCE ALLOCATION CHART

Section I. INTRODUCTION

B-1. General

a. This section provides a general explanation of all maintenance and repair functions authorized at various maintenance levels.

b. The Maintenance Allocation Chart (MAC) in Section II designates overall authority and responsibility for the performance of maintenance functions on the identified end item or component. The application of the maintenance functions the end item or component will be consistent with the capabilities of the designated maintenance levels.

c. Section III lists the tools and test equipment (both special tools and common tool sets) required for each maintenance function as referenced from Section II.

d. Section IV contains supplemental instructions and explanatory notes for a particular maintenance function.

B-2. Maintenance Functions

Maintenance functions will be limited to and defined as follows:

a. **Inspect.** To determine the serviceability of an item by comparing its physical, mechanical and/or electrical characteristics with established standards through examination (e.g., by sight, sound or feel).

b. **Test.** To verify serviceability by measuring the mechanical, pneumatic, hydraulic or electrical characteristics of an item and comparing those characteristics with prescribed standards.

c. **Service.** Operations required periodically to keep an item in proper operating condition, i.e., to clean (includes decontaminate, when required), to preserve, to drain, to paint or to replenish fuel, lubricants, chemical fluids or gases.

d. **Adjust.** To maintain or regulate, within prescribed limits, by bringing into proper or exact position, or by setting the operating characteristics to specified parameters.

e. **Align.** To adjust specified variable elements of an item to bring about optimum or desired performance.

B-2. Maintenance Functions (cont'd)

f. Calibrate. To determine and cause corrections to be made or to be adjusted on instruments or test, measuring and diagnostic equipment used in precision measurement. Consists of comparisons of two instruments, one of which is a certified standard of known accuracy, to detect and adjust any discrepancy in the accuracy of the instrument being compared.

g. Remove/Install. To remove and install the same item when required to perform service or other maintenance functions. Install may be an act of emplacing, seating or fixing into position a spare, repair part or module (component or assembly) in a manner to allow proper functioning of an equipment or system.

h. Replace. To remove an unserviceable item and install a serviceable counterpart in its place. "Replace" is authorized by the MAC and is shown as the 3rd position of the SMR code.

i. Repair. The application of maintenance services, including fault location/troubleshooting, removal/installation and disassembly/assembly procedures and maintenance actions to identify troubles and restore serviceability to an item by correcting specific damage, fault, malfunction or failure in a part, subassembly, module (component or assembly), end item or system.

j. Overhaul. That maintenance effort (service/action) prescribed to restore an item to a completely serviceable/operational condition as required by maintenance standards in appropriate technical publications (i.e., DMWR). Overhaul is normally the highest degree of maintenance performed by the Army. Overhaul does not normally return an item to like new condition.

k. Rebuild. Consists of those services/actions necessary for the restoration of unserviceable equipment to alike new condition in accordance with original manufacturing standards. Rebuild is the highest degree of materiel maintenance applied to Army equipment. The rebuild operation includes the act of returning to zero those age measurement (hours/miles, etc.) considered in classifying Army equipment/components.

B-3. Explanation of Columns in the MAC, Section II

a. Column 1, Group number. Column 1 lists functional group code numbers, the purpose of which is to identify maintenance significant components, assemblies, subassemblies and modules with the next higher assembly. End item group number shall be "00".

b. Column 2, Component/Assembly. Column 2 contains the names of components, assemblies, subassemblies and modules for which maintenance is authorized.

c. Column 3, Maintenance Function. Column 3 lists the functions to be performed on the items listed in column 2. (For detailed explanation of the items listed in column 2, see paragraph B-2.)

d. Column 4, Maintenance Category. Column 4 specifies, by the listing of a work time figure in the appropriate subcolumn(s), the category of maintenance authorized to perform the function listed in column 3. This figure represents the active time required to perform the maintenance function at the indicated level of maintenance. If the number or complexity of the tasks within the listed maintenance function vary at different maintenance categories, appropriate times will be shown for each category.

B-3. Explanation of Columns in the MAC, Section II (cont'd)

The work time figure represents the average time required to restore an item (assembly, subassembly, component, module, end item or system) to a serviceable condition under typical field operating conditions. This time includes preparation time (including any necessary disassembly/assembly time), troubleshooting/fault location time and quality assurance/quality control time in addition to the time required to perform the specific tasks identified for the maintenance functions authorized in the maintenance allocation chart. The symbol designations for the various maintenance levels are:

Unit Maintenance Level
C ..... Operator or Crew
O ..... Organizational maintenance

Intermediate Direct Support Maintenance Level
F ..... Intermediate direct support maintenance

Intermediate General Support Maintenance Level
H ..... Intermediate general support maintenance

Depot Maintenance Level
D ..... Depot maintenance

e. **Column 5, Tools and Equipment.** Column 5 specifies, by code, those tool sets (not individual tools) and special tools, TMDE and support equipment required to perform the designated function.

f. **Column 6, Remarks**. This column shall, when applicable, contain a letter code, in alphabetical order, which shall be keyed to the remarks contained in Section IV.

B-4. Explanation Of Columns In Tool And Test Equipment Requirements, Section III

a. **Column 1, Reference code.** The tool and test equipment reference code correlates with a code used in the MAC, Section II, Column 5.

b. **Column 2, Maintenance Category.** The lowest level of maintenance authorized to use the tools or test equipment.

c. **Column 3, Nomenclature.** Name or identification of tool or test equipment.

d. **Column 4, National Stock Number.** The National Stock Number (NSN) of the tool or test equipment.

e. **Column 5, Tool Number.** The manufacturer's part number.

B-5. Explanation of Columns In Remarks, Section IV

a. **Column 1, Reference Code.** The code recorded in column 6, Section II.

b. **Column 2, Remarks.** This column lists information pertinent to the maintenance function being performed as indicated in the MAC, Section II.

SECTION II. MAINTENANCE ALLOCATION CHART									
Group Number	Component/Assembly	Maintenance Function	Maintenance Level					Tools and Equipmt	Remarks
			Unit		Intmd				
(1)	(2)	(3)	C	O	F	H	D	(5)	(6)
06	**ELECTRICAL SYSTEM**							01	
0608	COVER ASSEMBLY (XM1063 Only)	Inspect Replace	0.1	 0.2					
	RESISTOR ASSEMBLY (XM1063 Only)	Inspect Replace	0.1	 0.5					
	VOLTAGE CONVERTER (M129A4 Only)	Inspect Replace	0.1	 0.5					
	ELECTRIC RECEPTACLE	Inspect Replace	0.1	 0.5					
	CIRCUIT BOARD (XM1063 Only)	Inspect Replace	0.2	 0.3					
	POWER INLET (M129A4 Only)	Inspect Replace	0.1	 0.3					
	CIRCUIT BREAKER BOX (M129A4 Only	Inspect Replace Repair	0.1	 0.5 0.5					
	CAPACITOR BOX (M129A4 Only)	Inspect Replace	0.1	 1.0					
0609	LIGHTS	Inspect Replace	0.1	 0.2					
	LIGHTING FIXTURE (M129A4 Only)	Inspect Replace Repair	0.1	 0.5 0.3					
0613	WIRING HARNESS BODY	Inspect Test Replace		0.2 0.3 0.5					

Maintenance Levels:

Unit
C - Crew/Operator
O - Organizational

Intermediate
F - Intermediate Direct Support
H - Intermediate General Support

D - Depot

SECTION II. MAINTENANCE ALLOCATION CHART									
Group Number (1)	Component/Assembly (2)	Maintenance Function (3)	Maintenance Level					Tools and Equipmt (5)	Remarks (6)
			Unit		Intmd				
			C	O	F	H	D		
	DOLLY	Inspect		0.2					
		Replace		1.0					
11	**AXLE**							01, 02, 03	
1100	REAR AXLE ASSEMBLY	Inspect		0.5					
		Replace			8.0				
		Repair			9.0				
12	**BRAKES**							01, 02	
1202	SHOE ASSEMBLY	Inspect		0.5					
		Adjust		0.5					
		Replace		2.0					
	LINING, SHOE	Inspect		0.3					
		Replace			3.0				
	SLACK ADJUSTER	Inspect		0.2					1
		Replace		0.5					
		Service		0.1					
1208	CHAMBER, AIR	Inspect	0.1						
		Replace		1.0					
	VALVE, RELAY	Inspect	0.1						
		Replace		1.0					
	VALVE, RATIO RELAY	Inspect	0.1						
		Replace		0.5					
	RESERVOIR, AIR	Inspect	0.1						
		Test		0.2					
		Replace		0.5					

Maintenance Levels:

Unit
C - Crew/Operator
O - Organizational

Intermediate
F - Intermediate Direct Support
H - Intermediate General Support

D - Depot

SECTION II. MAINTENANCE ALLOCATION CHART									
Group Number	Component/Assembly	Maintenance Function	Maintenance Level					Tools and Equipmt	Remarks
			Unit		Intmd				
(1)	(2)	(3)	C	O	F	H	D	(5)	(6)
	HOSE, AIR (SHORT)	Inspect	0.1						
		Test		0.2					
		Replace		0.5					
	HOSE, AIR (LONG)	Inspect	0.2						
		Test		0.3					
		Replace		2.0					
	COCK, DRAIN	Inspect	0.1						
		Test		0.1					
		Replace		0.1					
	COUPLING, AIR (GLAD-HAND)	Inspect	0.1						
		Replace		0.3					
	HOSE ASSEMBLY, RUBBER	Inspect		0.1					
		Replace		0.2					
13	**WHEEL ASSEMBLY**							01, 02, 03	
1311	BEARING, HUB	Inspect		0.3				04	
		Adjust		0.2					
		Replace		1.0					2
		Service		0.3					
	SEAL, OIL	Replace		0.5					
	BRAKE DRUM	Inspect		0.5					
		Replace		0.5					
		Repair			1.0				
	WHEEL	Replace	0.5						
1313	TIRE	Inspect	0.2						
		Replace		0.5					
		Repair				1.0			

Maintenance Levels:

Unit
C - Crew/Operator
O - Organizational

Intermediate
F - Intermediate Direct Support
H - Intermediate General Support

D - Depot

SECTION II. MAINTENANCE ALLOCATION CHART									
Group Number	Component/Assembly	Maintenance Function	Maintenance Level					Tools and Equipmt	Remarks
			Unit		Intmd				
(1)	(2)	(3)	C	O	F	H	D	(5)	(6)
	INNER TUBE	Inspect		0.5					
	(XM1063 Only)	Replace		1.0					
		Repair			1.5				
	SPARE TIRE	Replace	0.5						
15	**FRAME**							01	
1501	REAR PLATFORM	Inspect	0.1						
	(M129A4 Only)	Repair		1.0					
		Service		0.1					
1504	CARRIER, SPARE WHEEL	Inspect	0.1						
		Replace		0.3					
		Repair		0.5					
		Service		0.1					
1507	LANDING GEAR	Inspect	0.2						
		Replace		0.5					
		Service		0.1					
	(M129A4 Only)	Repair			1.0				
	LANDING LEG BRACES	Replace		0.5					
		Repair			1.0				
	LANDING LEG CHANNEL	Replace		0.7					
	(M129A4 Only)	Repair			0.5				
	LEVELING JACK	Inspect	0.2						
		Replace		0.5					
		Service		0.1					
	(M129A4 Only)	Repair			0.7				

Maintenance Levels:

Unit
C - Crew/Operator
O - Organizational

Intermediate
F - Intermediate Direct Support
H - Intermediate General Support

D - Depot

SECTION II. MAINTENANCE ALLOCATION CHART									
Group Number	Component/Assembly	Maintenance Function	Maintenance Level					Tools and Equipmt	Remarks
			Unit		Intmd				
(1)	(2)	(3)	C	O	F	H	D	(5)	(6)
16	**SPRINGS**							01, 02	
1601	SPRING ASSEMBLY	Inspect		0.2					
		Replace			3.0				
	SEAT, SPRING	Inspect			0.2				
		Replace			2.0				
	HUB, TRUNNION	Inspect			0.2				
		Replace			1.0				
	BUSHING, SLEEVE	Inspect			0.2				
		Replace			1.0				
	PAD, RUBBER	Inspect			0.2				
		Replace			0.5				
18	**BODY**							01,02	
1801	HINGE, DOOR	Inspect	0.1						
		Replace		0.5					
	(M129A4 Only)	Service		0.1					
	LOCK ASSEMBLY	Inspect	0.2						
		Replace		0.2					
	(M129A4 Only)	Service		0.1					
	HOLDER, DOOR	Inspect	0.1						
		Replace		0.2					
	SEAL, DOOR	Inspect	0.1						
		Replace		0.3					
	SPLASH GUARD	Inspect	0.1						
		Replace		0.5					
	LADDER	Service		0.1					

Maintenance Levels:

Unit
C - Crew/Operator
O - Organizational

Intermediate
F - Intermediate Direct Support
H - Intermediate General Support

D - Depot

SECTION II. MAINTENANCE ALLOCATION CHART									
Group Number	Component/Assembly	Maintenance Function	Maintenance Level					Tools and Equipmt	Remarks
			Unit		Intmd				
(1)	(2)	(3)	C	O	F	H	D	(5)	(6)
	LADDER BRACKET (XM1063 Only)	Replace		0.3					
	HANDRAIL M129A4 Only)	Service		0.1					
	LIFTING ARM ASSEMBLY	Inspect	0.2						
		Replace		0.5					
		Service		0.3					
	KINGPIN AND PICKUP PLATE	Inspect	0.1						
		Service	0.1						
1808	TOOL BOX (M129A4 Only)	Replace		0.2					
	TM BOX (M1129A4 Only)	Replace		0.2					
	VENT AND SCREEN (M129A4 Only)	Replace		0.2					
		Repair		0.2					
	EXTERIOR VENTS (M129A4 Only)	Replace			1.0				
		Repair			1.0				
22	**ACCESSORY ITEMS**								
2202	RELFLECTORS	Inspect	0.1						
		Replace		0.2					
2210	DATA PLATES	Replace		0.2					

Maintenance Levels:

Unit
C - Crew/Operator
O - Organizational

Intermediate
F - Intermediate Direct Support
H - Intermediate General Support

D - Depot

SECTION II. MAINTENANCE ALLOCATION CHART									
Group Number	Component/Assembly	Maintenance Function	Maintenance Level					Tools and Equipmt	Remarks
			Unit		Intmd				
(1)	(2)	(3)	C	O	F	H	D	(5)	(6)
76	**FIREFIGHTING EQUIPMENT**							01	
7638	FIRE EXTINGUISHER (M129A4 Only)	Inspect	0.1						
		Replace	0.1						
		Service			0.3				
	BRACKET (M129A4 Only)	Replace		0.2					

Maintenance Levels:

Unit
C - Crew/Operator
O - Organizational

Intermediate
F - Intermediate Direct Support
H - Intermediate General Support

D - Depot

SECTION III. TOOL AND TEST EQUIPMENT REQUIREMENTS

Tool or Test Equipment Reference Code	Maintenance Category	Nomenclature	National/NATO Stock Number	Tool No.
01	O, F	Tool Kit General Mechanics: Automotive	5180-00-177-7033	SC5180-90-CL-N26
02	O, F	Shop Equipment Automotive Maintenance and Repair	4910-00-754-0705	SC4910-95-CL-A31
03	O, F	Wheel Bearing Wrench Set	5120-00-169-4586	Z62-D
04	O	Guard Press, Gravel		P/N 5525236

SECTION IV. REMARKS

Reference Code	Remarks/Notes
1	Snap ring pliers (NSN 5120-00-293-0048) are required to replace M129A4 slack adjusters.
2	Gravel guard press is required to replace gravel guard on M129A4 hub and drum.

APPENDIX C
COMPONENTS OF END ITEM AND BASIC ISSUE ITEMS LIST

Section I. INTRODUCTION

C-1. Scope

This appendix lists Components of End Item (COEI) and Basic Issue Items (BII) for the XM1063 and M129A4 semitrailers.

C-2. General

The Components of End Item (COEI) and Basic Issue Items (BII) lists are divided into the following sections:

a. **Section II: Components of End Item.** This listing is for informational purposes only and is not authority to requisition replacements. These items are part of the end item, but are removed and separately packaged for transportation and shipment. As part of the end item, these items must be with the end item whenever it is issued or transferred between property accounts. Illustrations are provided to assist you in identifying the items.

b. **Section III: Basic Issue Items.** These are the minimum essential items required to place the semitrailer in operation, to operate it and to perform emergency repairs. Although shipped separately packaged, BII must be with the semitrailer during operation and whenever it is transferred between property accounts. The illustrations will assist you in identifying the BII. This manual is your authority to request/requisition replacement BII, based on TOE/MTOE authorization of the end item.

C-3. Explanation of Columns

The following provides an explanation of columns found in the tabular listings:

a. **Column (1): Illustration Number (Illus Number).** This column indicates the number of the illustration in which the item is shown.

b. **Column (2): National Stock Number.** Indicates the National Stock Number (NSN) assigned to the item and will be used for requisitioning purposes.

c. **Column (3): Description.** Indicates the federal item name and, if required, a minimum description to identify and locate the item. The last line for each item indicates the CAGE (in parentheses) followed by the part number. If the item needed differs for different models of the equipment, the model is shown under the Usable On Code heading in this column. XM1063 UOC is MEE. M129A4 UOC is JNH.

d. **Column (4): Unit of Measure (U/M).** Indicates the measure used in performing the actual operation/maintenance function. This measure is expressed by a two-character alphabetical abbreviation (e.g., ea., in., pr.).

e. **Column (5): Quantity required (Qty rqr).** Indicates the quantity of the item authorized to be used with/on the equipment.

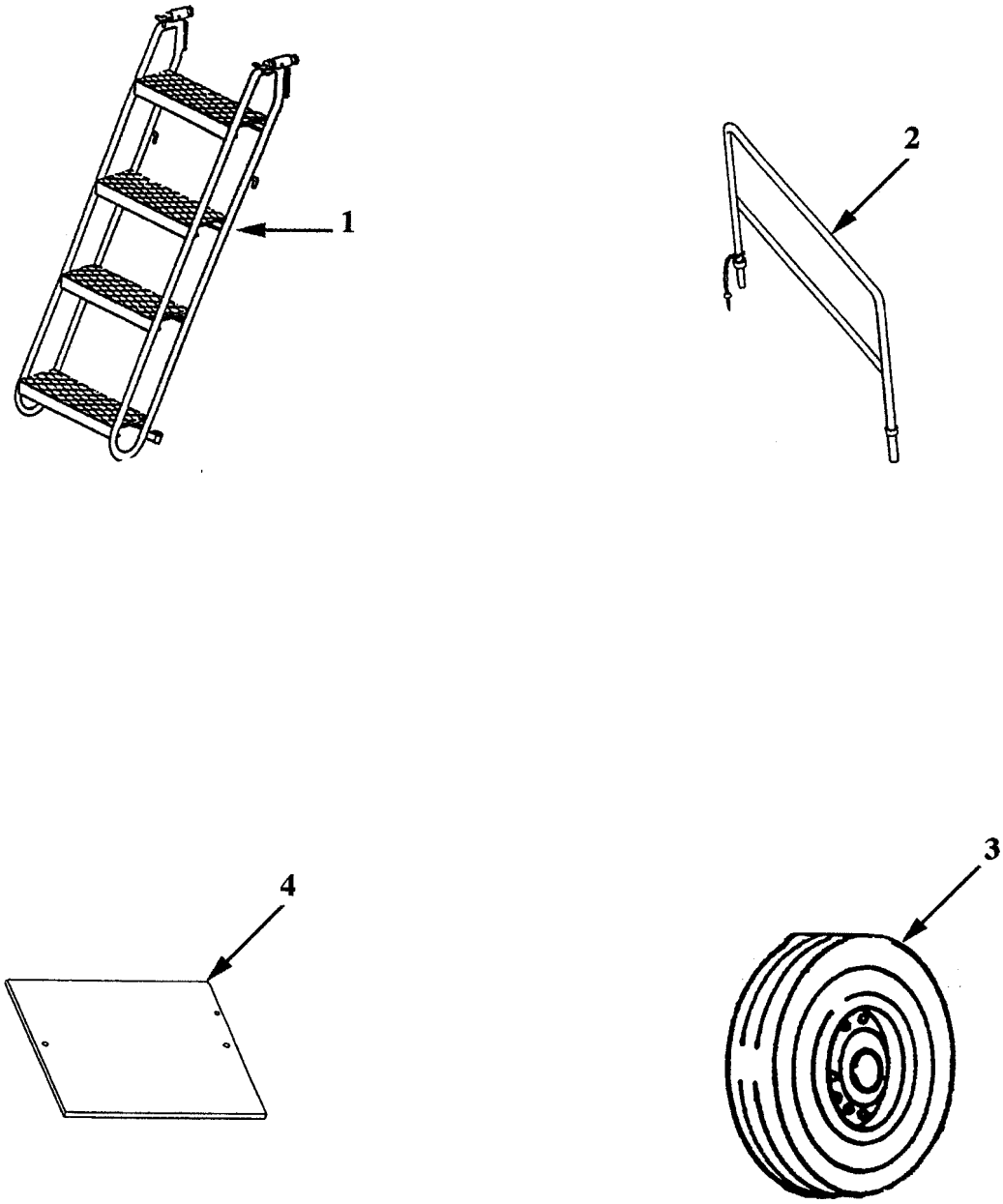

Components of End Item

SECTION II. COMPONENTS OF END ITEM

(1) Illustration Number	(2) National Stock Number	(3) Description (CAGE) Part Number Usable on Code	(4) U/M	(5) Qty reqr.
1		LADDER (XM1063): vehicle boarding, in brackets underneath van body (19207) 12360404 MEE	EA	1
1		LADDER (M129A4): vehicle boarding, in brackets on rear platform (19207) 12368594 JNH	EA	1
2		LADDER, HANDRAIL, (M129A4): vehicle boarding, in brackets on rear platform (19207) 12368561 JNH	EA	1
3		SPARE TIRE (XM 1063): in spare tire carrier, comprised of:		
	2530-01-283-5114	WHEEL (19207) 12354148 MEE	EA	1
	2610-00-204-4026	TIRE, PNUEMATIC (81348) GP3STYLXTYBBCLR/T/10.00-20/F/TBH	EA	1
	2610-00-260-7345	INNER TUBE, PNUEMATIC (81348) GROUP2/10.00-20/TR444/TR464/ONCT	EA	1
	2640-00-052-0875	VALVE, PNUEMATIC TIRE (96906 MS5139-4	EA	1
	2640-00-060-3550	CAP, PNUEMATIC VALVE (81348) ZZ-V-25/TYPE IV/CLASS1/TR-VC-2	EA	1
4		SAND PLATE (M129A4): on landing leg braces (refer to Appendix G) (19207) 12307809 JNH	EA	2

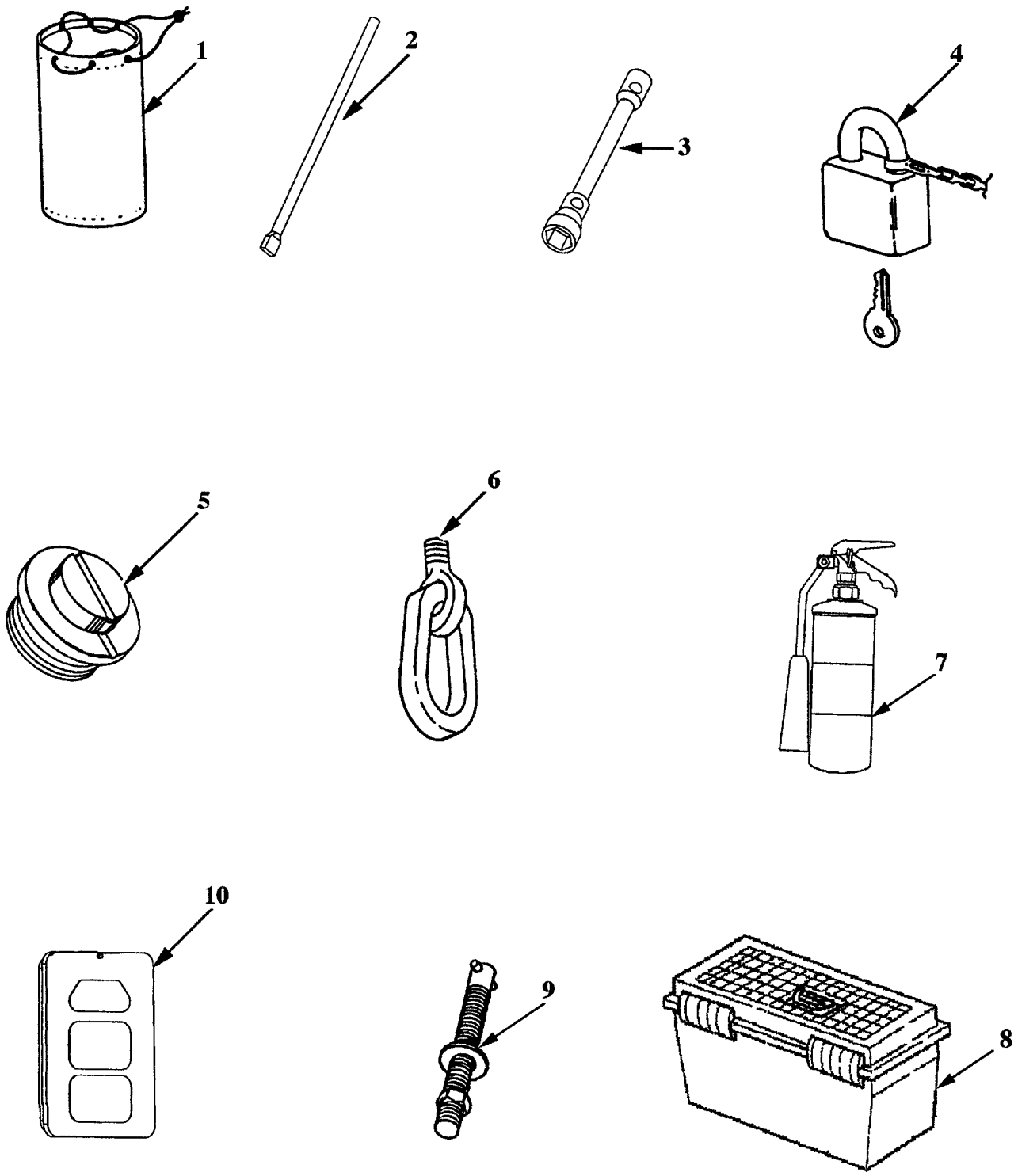

Basic Issue Items

SECTION III. BASIC ISSUE ITEMS

(1) Illustration Number	(2) National Stock Number	(3) Description (CAGE) Part Number Usable on Code	(4) U/M	(5) Qty reqr.
1	8105-01-171-4739	BAG: tire down ring storage, in interior of van body (19207) MEE, JNH	EA	2
2	5120-00-243-2419	HANDLE: wrench, in interior of van body (21450) 41-H-1541 MEE, JNH	EA	1
3	5120-00-293-1289	WRENCH, LUG: wheel nut, vany body (21450) 41W3838-30 MEE, JNH	EA	1
4	5340-01-285-9035	PADLOCK SET (XM 1063): on door (19207) 12353784-5 MEE	EA	1
4	5340-01-004-5180	PADLOCK SET (M129A4): on door (96906) MS35647-5 JNH	EA	1
5	5340-01-263-6249	PLUG, CAP (XM1063): tie down ring holes (81349) M5501/10-R15 MEE	EA	30
5	5340-01-263-6249	PLUG, CAP (M129A4): tie down ring holes (81349) M5501/10-R15 JNH	EA	20
6	16700-01-092-9236	RING, TIEDOWN (XM1063): in stowage bags in interior of van body (96906) MS21237-1B MEE	EA	30
6	1670-01-092-9236	RING, TIEDOWN (M129A4): in stowage bags in interior of van body (96906) MS21237-1B JNH	EA	20
7	4210-00-165-4703	FIRE EXTINGUISHER (M129A4): two locations inside van body (58536) A-A-393 JNH	EA	2
8		TOOL BOX (M129A4): interior of van body (19207) 12377998 JNH	EA	1
9	5306-01-313-9961	BOLT, MACHINE (BRAKE RELEASE TOOL) (B4B10) 09007003 MEE, JNH	EA	4
10		CONTAINER, MANUAL (M129A4: interior of van body (19207) 12307738 JNH	EA	1

APPENDIX D
ADDITIONAL AUTHORIZATION LIST

D-1. Scope

This appendix lists additional items you are authorized for the support of the XM1063 and M129A4 semitrailers.

D-2. General

The Additional Authorization List (AAL) identifies items that do not have to accompany the semitrailer and that do not have to be turned in with it. These items are authorized to you by CTA, MTOE, TDA or JTA.

D-3. Explanation of Listing

National Stock Numbers (NSNs), descriptions and quantities are provided to help you identify and request the additional items you require to support this equipment. These items are listed in alphabetical order by item number under the type of document (i.e., CTA, MTOE, TDA or JTA) which authorizes the item(s) to you.

(1) NATIONAL STOCK NUMBER	(2) DESCRIPTION AND CAGE PART NUMBER		USABLE ON CODE	(3) U/M	(4) QTY
6145-00-548-1243	(81348)	CABLE, POWER, ELECTRICAL J-C-580SOCK3/12RNJ	JNH	EA	A/R
5935-01-005-3579	(81348)	CONNECTOR, PLUG, ELECTRICAL WC596/13-3	JNH	EA	1
5120-01-144-8802	(19207)	SOCKET, WRENCH 11676946	JNH	EA	1

APPENDIX E
EXPENDABLE/DURABLE SUPPLIES AND MATERIALS LIST

Section I. INTRODUCTION

E-1. Scope

This listing is for informational purposes only and is not authority to requisition the listed items. These items are authorized to you by CTA 50-970, Expendable/Durable Items (Except Medical, Class V, Repair Parts and Heraldic Items) or CTA 8-100, Army Medical Department Expendable/Durable Items.

E-2. Explanation of Columns

a. **Column 1 - Item Number.** This number is assigned to the entry in the listing and is referenced in the narrative instructions to identify the material (e.g., "Use dry cleaning solvent (item 3, Appendix E)").

b. **Column 2 - Level.** This column identifies the lowest level of maintenance that requires the listed item.

C - Operator/Crew
O - Unit level
F - Intermediate Direct Support
H - Intermediate General Support

c. **Column 3 - National Stock Number.** This is the national stock number assigned to the item. Use it to request or requisition the item.

d. **Column 4 - Description.** Indicates the Federal item name and, if required, a description to identify the item. The last line for each item indicates the Contractor and Government Entity Code (CAGE) in parentheses followed by the part number.

e. **Column 5 - Unit of Measure (U/M).** Indicates the measure used in performing the actual maintenance function. This measure is expressed by a two character alphabetical abbreviation (e.g., ea, in, pr). If the unit of measure differs from the unit of issue, requisition the lowest unit of issue that will satisfy your requirement.

SECTION II. EXPENDABLE/DURABLE SUPPLIES AND MATERIALS LIST

(1) ITEM NO.	(2) LEVEL	(3) NATIONAL STOCK NUMBER	(4) DESCRIPTION	(5) U/M
1			Barrier, material, greaseproofed, waterproofed, flexible smooth, Grade A, heat sealable MIL-B-121	
	O	8135-00-753-4662	100-yd roll	EA
2			Cement, bonding, MMM-A-1617, type 2	
	O	8040-00-290-4301	1 Qt can	EA
3			Dry Cleaning Solvent, PD-680 (SD II)	
	C, O	6850-00-281-1985	1 Gal can	EA
4			Dessicant, activated, bagged, packagaing use and static dehumidification (about 9 units per pound) dessicant units per bag (about 2 lb) MIL-D-3464	
	C, O	6850-00-264-6572	150 bags, 16 oz	EA
5			Grease, Automotive and Artillery (GAA) MIL-G-10924	
	C, O	9150-00-197-7960	1.75 lb can	EA
	C, O	9150-00-190-0905	5 lb can	EA
	C, O	9150-00-197-7692	35 lb can	EA
6			Enamel, Black (87187) 1666601	
	O	8010-00-132-2863	13 ox can	EA
7			Sealing Compound Loctite (050072) 242-41	
	O	8030-01-025-1692	250cc bottle	EA
8			Lubricating Oil, MIL-L-2104, OE/HDO-30	
	O	9150-00-186-6681	1 Qt can	EA
	O	9150-00-188-9858	5 Gal can	EA
	O	9150-00-188-9859	55 Gal drum (16 GA)	EA

SECTION II. EXPENDABLE/DURABLE SUPPLIES AND MATERIALS LIST

(1) ITEM NO.	(2) LEVEL	(3) NATIONAL STOCK NUMBER	(4) DESCRIPTION	(5) U/M
9			Lubrication Oil, Sub-zero, MIL-L-2104 (temp above -20° F), OE/HDO-10	
	O	9150-00-189-6727	1Qt can type 1	EA
	O	9150-00-191-2772	55 Gal drum	EA
10			Lubricating Oil, MIL-L-2104 15W-40 OE/HDO (temp above 5° F (-15° C)	
	O	9150-01-152-4117	1Qt can	EA
11			Silicone Lubricant MIL-S-8660	
	F	8650-00-177-5094	2 oz tube	EA
12	C, O	8030-00-889-3534	Tape, Teflon, MIL-T-27730	EA
13			Waterproof, Sealant, MIL-C-21067	
	C, O	8030-00-515-2488	1 Cartridge	EA
14			Rag, Wiping, white bleached MIL-STD-AA-521	
	C, O	7920-00-205-1711	50 lb bale	EA
15	O	7920-00-061-0038	Brush, bristle (83421) 7920-00-061-0038	EA
16			Lacquer, Brushing, clear TT-L-26	
	O	8010-00-166-1688	1 Qt can	EA
	O	8010-00-166-1689	5 Gal can	EA
17	O		Soap, Dishwashing (81348) P-D-410	
		7930-00-899-9534	5 Gal can	EA
18	O		Detergent, Nonsudsing (80244) MIL-D-16791 Type I	
		7930-00-282-9699	1 Gal can	EA

SECTION II. EXPENDABLE/DURABLE SUPPLIES AND MATERIALS LIST

(1) ITEM NO.	(2) LEVEL	(3) NATIONAL STOCK NUMBER	(4) DESCRIPTION	(5) U/M
19	O		Compound, Cleaning (OXHPI) MIL-C-83360C, Type I	
		6850-00-003-5295	16 oz can	EA
20	F		Enamel, Green (11248) 616C	
		8010-00-066-5901	5 Gal can	EA
21	F		Sealant, Sikaflex, White 221 521	
			10.3 oz can	EA
22	F		Paint, Primer (81349) MIL-P-53022	
		8010-01-193-0516		EA

APPENDIX F
REPAIR PARTS AND SPECIAL TOOLS LIST

Section I. INTRODUCTION

F-1. SCOPE.

This repair parts and special tools list (RPSTL) lists and authorizes spares and repair parts; special tools; special test, measurement, and diagnostic equipment (TMDE); and other special M129A4 support equipment required for the performance of Unit, Direct Support, and General Support maintenance of the M129A4 trailer. It authorizes the requisitioning, issue, and disposition of spares, repair parts, and special tools as indicated by the source, maintenance, and recoverability (SMR) code.

F-2. GENERAL.

In addition to Section I, this RPSTL is divided into the following sections:

a. **Repair Parts List Work Package.** A list of spares and repair parts authorized by this RPSTL for use in the performance of maintenance. The list also includes parts that must be removed for replacement of the authorized parts. Parts lists are composed of functional groups in ascending alphanumeric sequence, with the parts in each group listed in ascending figure and item number sequence. Bulk materials are listed in item name sequence. Repair parts kits are listed separately in their own functional group. Repair parts for repairable special tools are also listed in this section. Items listed are shown on the associated illustration(s)/figure(s).

b. **Special Tools List Work Package.** A list of special tools, special TMDE, and other special support equipment authorized by this RPSTL for the performance of maintenance.

c. **Cross-Reference Indexes Work Package.** A list, in national item identification number (NIIN) sequence, of all national stock numbered items appearing in the listing, followed by a list in alphanumeric sequence of all part numbers appearing in the listings. National stock numbers (NSNs) and part numbers are cross-referenced to each illustration/figure and item number appearance.

F-3. EXPLANATION OF COLUMNS IN REPAIR PARTS LIST WORK PACKAGE.

a. **ITEM NO. [Column (1)].** Indicates the number used to identify items called out in the illustration.

b. **SMR CODE [Column (2)].** The SMR code is a 5-position code containing supply/requisitioning information, maintenance category authorization criteria, and disposition instruction, as shown in the following breakout:

Source Code	Maintenance Code		Recoverability Code
xx	xx		x
1st two positions: How to get an item.	3rd position: Who can install, replace, or use the item.	4th position: Who can do complete repair* on the item.	5th position: Who determines disposition action on unserviceable items.

* *Complete Repair:* Maintenance capacity, capability, and authority to perform all corrective maintenance tasks of the "Repair" function in a use/user environment in order to restore serviceability to a failed item.

F-3. EXPLANATION OF COLUMNS IN REPAIR PARTS LIST WORK PACKAGE (con't).

(1) **Source Code.** The source code tells you how to get an item needed for maintenance, repair, or overhaul of an end item/equipment. Explanations of source codes follow:

Code	*Application/Explanation*
PA PB PC** PD PE PF PG	Stocked items; use the applicable NSN to request/ requisition items with these source codes. They are authorized to the category indicated by the code entered in the third position of the SMR code. ***Items coded PC are subject to deterioration.*
KD KF KB	Items with these codes are not to be requested/ requisitioned individually. They are part of a kit that is authorized to the maintenance category indicated in the third position of the SMR code. The complete kit must be requisitioned and applied.
MO - Made at ORG/AVUM Level *MF - Made at DSA/AVUM Level* *MH - Made at GS Level* *MD - Made at Depot*	Items with these codes are not to be requested/ requisitioned individually. They must be made from bulk material that is identified by the part number in the DESCRIPTION AND USABLE ON CODE (UOC) column and listed in the bulk material group of the repair parts list in this RPSTL. If the item is authorized to you by the third position code of the SMR code, but the source code indicates it is made at a higher level, order the item from the higher level of maintenance.
AO - Assembled by ORG/AVUM Level *AF - Assembled by DS/AVUM Level* *AH - Assembled by GS Level* *AD - Assembled at Depot*	Items with these codes are not to be requested/ requisitioned individually. The parts that make up the assembled item must be requisitioned or fabricated and assembled at the level of maintenance indicated by the source code. If thethird position code of the SMR code authorizes you to replace the item, but the source code indicates that the item is assembled at a higher level, order the item from the higher level of maintenance.

NOTE

Cannibalization or controlled exchange, when authorized, may be used as a source of supply for items with the preceding source codes, except for those source coded "XA."

F-3. EXPLANATION OF COLUMNS IN REPAIR PARTS LISLT WORK PACKAGE (con't).

XA - DO NOT requisition an "XA" -coded item. Order its next higher assembly.
XB - If an "XB" item is not available from salvage, order it using the CAGEC and part number given.
XC - Installation drawing, diagram, instruction sheet or field service drawing that is identified by manufacturer's part number.
XD - Item is not stocked. Order an "XD" -coded item through normal supply channels using the CAGEC and part number given if no NSN is available.

(2) **Maintenance Code.** Maintenance codes tell you the level(s) of maintenance authorized to use and repair support items. The maintenance codes are entered in the third and fourth positions of the SMR code as follows:

(a) The maintenance code entered in the third position tells you the lowest maintenance level authorized to remove, replace, and use an item. The maintenance code entered in the third position will indicate authorization to one of the following levels of maintenance:

Code	*Application/Explanation*
C	Crew or operator maintenance done within Unit maintenance or aviation Unit maintenance.
O	Organizational maintenance or aviation Unit can remove, replace, and use the item.
F	Direct support or aviation intermediate level can remove, replace, and use the item.
H	General support level can remove, replace, and use the item.
L	Specialized repair activity (SRA) can remove, replace, and use the item.
D	Depot level can remove, replace, and use the item.

NOTE

If authorized by the maintenance allocation chart (MAC) and SMR codes, some limited repair may be done on an item at a lower level of maintenance.

(b) The maintenance code entered in the fourth position tells whether the item is to be repaired and identifies the lowest maintenance level with the capability to do complete repair (i.e., perform all authorized *"Repair"* functions). This position will contain one of the following maintenance codes:

Code	*Application/Explanation*
O	Organizational maintenance or aviation unit is the lowest level that can do complete repair of the item.
F	Direct support of aviation intermediate is the lowest level than can do complete repair of the item.
H	General support is the lowest level that can do complete repair of the item.
L	Specialized repair activity is the lowest level that can do complete repair of the item.
D	Depot is the lowest level that can do complete repair of the item.

F-3. EXPLANATION OF COLUMNS IN REPAIR PARTS LIST WORK PACKAGE (con't).

Z	Nonrepairable. No repair is authorized.
B	No repair is authorized. (No parts or special tools are authorized for the maintenance of a "B" coded item.) However, the item may be reconditioned by adjusting, lubricating, etc., at the user level.

(3) **Recoverability Code.** Recoverability codes are assigned to items to indicate the disposition action on unserviceable items. The recoverability code is entered in the fifth position of the SMR code as follows:

Code	*Application/Explanation*
Z	Nonrepairable item. When unserviceable, condemn and dispose of the item at the level of maintenance shown in the third position of the SMR code.
O	Repairable item. When uneconomically repairable, condemn and dispose of the item at Unit maintenance or aviation Unit level.
F	Repairable item. When uneconomically repairable, condemn and dispose of the item at the Direct Support or aviation intermediate level.
H	Repairable item. When uneconomically repairable, condemn and dispose of the item at the General Support level.
D	Repairable item. When beyond lower-level repair capability, return to depot. Condemnation and disposal of the item is not authorized below depot level.
L	Repairable item. Condemnation and disposal of the item is not authorized below SRA.
A	Item requires special handling or condemnation procedures for specific reasons (e.g., precious metal content, high dollar value, critical material, or hazardous material). Refer to appropriate manuals/directives for specific instructions.

c. **NSN [Column (3)].** The NSN for the item is listed in this column.

d. **CAGEC [Column (4)].** The CAGEC is a 5-digit alphanumeric code used to identify the manufacturer, distributor, or Government agency, etc., that supplies the item.

NOTE

When you use an NSN to requisition an item, the item you receive may have a part number different from the part ordered.

e. **PART NUMBER [Column (5)].** Indicates the primary number used by the manufacturer (individual, company, firm, corporation, or Government activity), which controls the design and characteristics of the item by means of its engineering drawings, specifications standards, and inspection requirements, to identify an item or range of items.

f. **DESCRIPTION AND USABLE ON CODE (UOC) [Column (6)].** This column includes the following information:

F-3. EXPLANATION OF COLUMNS IN REPAIR PARTS LIST WORK PACKAGE (con't).

(1) The Federal item name and, when required, a minimum description to identify the item.

(2) Physical security classification. Not applicable.

(3) Items that are included in kits and sets are listed below the name of the kit or set on Figure KIT.

(4) Spare/repair parts that make up an assembled item are listed immediately following the assembled item line entry.

(5) Part numbers for bulk materials are referenced in this column in the line item entry for the item to be manufactured/fabricated.

(6) When the item is not used with all serial numbers of the same model, the effective serial numbers are shown on the last line(s) of the description (before UOC).

(7) UOC MEE is the XM1063. UOC JNH is the M129A4..

(8) In the Special Tools List Work Package, the Basis of Issue (BOI) appears as the last line(s) in the entry for each special tool, special TMDE, and other special support equipment. When density of equipments supported exceeds density spread indicated in the BOI, the total authorization is increased proportionately.

(9) The statement "END OF FIGURE" appears just below the last item description in Column 5 for a given figure in both Repair Parts List Work Package and Special Tool List Work Package.

g. **QTY [Column (7)].** The *QTY* (quantity per figure) column indicates the quantity of the item used in the breakout shown on the illustration/figure, which is prepared for a functional group, subfunctional group, or an assembly. A "V" appearing in this column in lieu of a quantity indicates that the quantity is variable and the quantity may vary from application to application.

F-4. EXPLANATION OF COLUMNS IN CROSS-REFERENCE INDEXES WORK PACKAGE.

a. **National Stock Number (NSN) Index.**

(1) *STOCK NUMBER* **Column.** This column lists the NSN by NIIN sequence. The NIIN consists of the last nine digits of the NSN (e.g., 5305-01-674-1467). When using this column to locate an item, ignore the first 4 digits of the NSN. However, the complete NSN should be used when ordering items by stock number.

(2) *FIG.* **Column.** This column lists the number of the figure where the item is identified/located. The figures are in numerical order in Repair Parts List Work Package and Special Tool List Work Package.

(3) *ITEM* **Column.** The item number identifies the item associated with the figure listed in the adjacent FIG. column. This item is also identified by the NSN listed on the same line.

b. **Part Number Index.** Part numbers in this index are listed by part number in ascending alphanumeric sequence (i.e., vertical arrangement of letter and number combination that places the first letter or digit of each group in order A through Z, followed by the numbers 0 through 9 and each following letter or digit in like order).

(1) *CAGEC* **Column.** The CAGEC is a 5-digit alphanumeric code used to identify the manufacturer, distributor, or Government agency, etc., that supplies the item.

(2) *PART NUMBER* **Column.** Indicates the primary number used by the manufacturer (individual, firm, corporation, or Government activity), which controls the design and characteristics of the item by means of its engineering drawings, specifications standards, and inspection requirements, to identify an item or range of items.

(3) *STOCK NUMBER* **Column.** This column lists the NSN for the associated part number and manufacturer identified in the PART NUMBER and CAGEC columns to the left.

(4) *FIG.* **Column.** This column lists the number of the figure where the item is identified/located in Repair Parts List Work Package and Special Tool List Work Package..

(5) *ITEM* **Column.** The item number is that number assigned to the item as it appears in the figure referenced in the adjacent figure number column.

F-5. SPECIAL INFORMATION.

a. **Usable On Code.** MEE is the XM1063. JNH is the M129A4.

b. **Fabrication Instructions.** Bulk materials required to manufacture items are listed in the Bulk Material Functional Group of this RPSTL. Part numbers for bulk material are also referenced in the DESCRIPTION column of the line item entry for the item to be manufactured/fabricated. Detailed fabrication instructions for items source coded to be manufactured or fabricated are found in Appendix G of this manual.

F-5. SPECIAL INFORMATION (con't).

c. **Assembly Instructions.** Detailed assembly instructions for items source coded to be assembled from component spare/repair parts are found in Chapters 4 and 5. Items that make up the assembly are listed immediately following the assembly item entry, or reference is made to an applicable figure.

d. **Kits.** Not applicable.

e. **Index Numbers.** Not applicable.

f. **Associated Publications.** Not applicable.

F-6. HOW TO LOCATE REPAIR PARTS.

a. **When National Stock Number or Part Number Is Not Known:**

(1) **First.** Using the Table of Contents, determine the assembly group or subassembly group to which the item belongs. This is necessary because figures are prepared for assembly groups and subassembly groups, and listings are divided into the same groups.

(2) **Second.** Find the figure covering the assembly group or subassembly group to which the item belongs.

(3) **Third.** Identify the item on the figure and note the number(s).

b. **When National Stock Number or Part Number Is Known:**

(1) **First.** Using the National Stock Number Index or Part Number Index, find the pertinent NSN or part number. The NSN Index is in NIIN sequence. The part numbers in the Part Number Index are listed in ascending alphanumeric sequence. Both indexes cross-reference you to the illustration/figure and item number of the item you are looking for.

(2) **Second.** Turn to the figure and item number, verify that the item is the one you're looking for, then locate the item number in the repair parts list for the figure.

F-7. ABBREVIATIONS.

For standard abbreviations see MIL-STD-12, Military Standard Abbreviations for Use on Drawings, Specifications, Standards, and in Technical Documents.

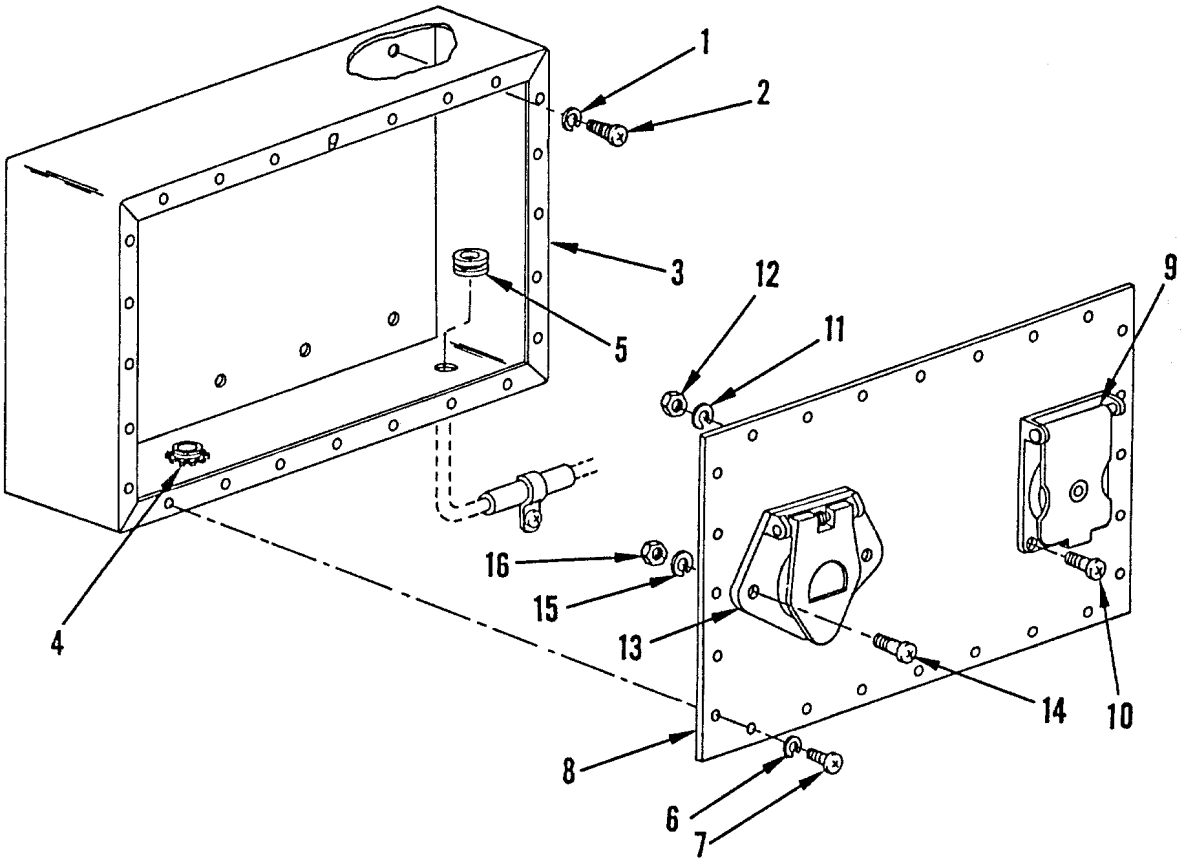

Figure 1. XM1063 Resistor Box and Cover Assembly

(1) ITEM NO	(2) SMR CODE	(3) NSN	(4) CAGEC	(5) PART NUMBER	(6) DESCRIPTION AND USABLE ON CODES(UOC)	(7) QTY
					GROUP 06 ELECTRICAL SYSTEM GROUP 0608 MISCELLANEOUS ITEMS FIG. 1 XM1063 RESISTOR BOX AND COVER ASSEMBLY	
1	PAOZZ	5310005825965	96906	MS35338-44	WASHER,LOCK..... UOC:MEE,	10
2	PAOZZ	5305000526921	96906	MS24629-57	SCREW,TAPPING..... UOC:MEE,	10
3	PAOZZ	5975013085624	19207	12354026	TERMINAL BOX..... UOC:MEE,	1
4	PAOZZ		19207	12360387	COUPLING BOSS..... UOC:MEE,	1
5	PAOZZ	5325002766228	70485	A12113	GROMMET,NONMETALLIC..... UOC:MEE,	1
6	PAOZZ	5310000453296	96906	MS35338-43	WASHER,LOCK..... UOC:MEE,	24
7	PAOZZ	5305008550958	96906	MS24629-45	SCREW,TAPPING..... UOC:MEE,	24
8	PAOZZ	5340012820961	19207	12354025	COVER,ACCESS..... UOC:MEE,	1
9	PAOZZ	5935007731428	19207	7731428	.COVER,ELECTRICAL CO..... UOC:MEE,	1
10	PAOZZ	5305009881725	96906	MS35206-281	.SCREW,MACHINE..... UOC:MEE,	4
11	PAOZZ	5310005825965	96906	MS35338-44	.WASHER,LOCK..... UOC:MEE,	4
12	PAOZZ	5310009971888	36378	MS35649-2252	.NUT,PLAIN,HEXAGON..... UOC:MEE,	4
13	PAOZZ	5935012114434	26697	JP0-0031	.CONNECTOR,RECEPTACL..... UOC:MEE,	1
14	PAOZZ	5305009845676	96906	MS35206-296	.SCREW,MACHINE..... UOC:MEE,	2
15	PAOZZ	5310004079566	96906	MS35338-45	.WASHER,LOCK..... UOC:MEE,	2
16	PAOZZ	5310008290081	96906	MS35649-2312	.NUT,PLAIN,HEXAGON..... UOC:MEE,	2

END OF FIGURE

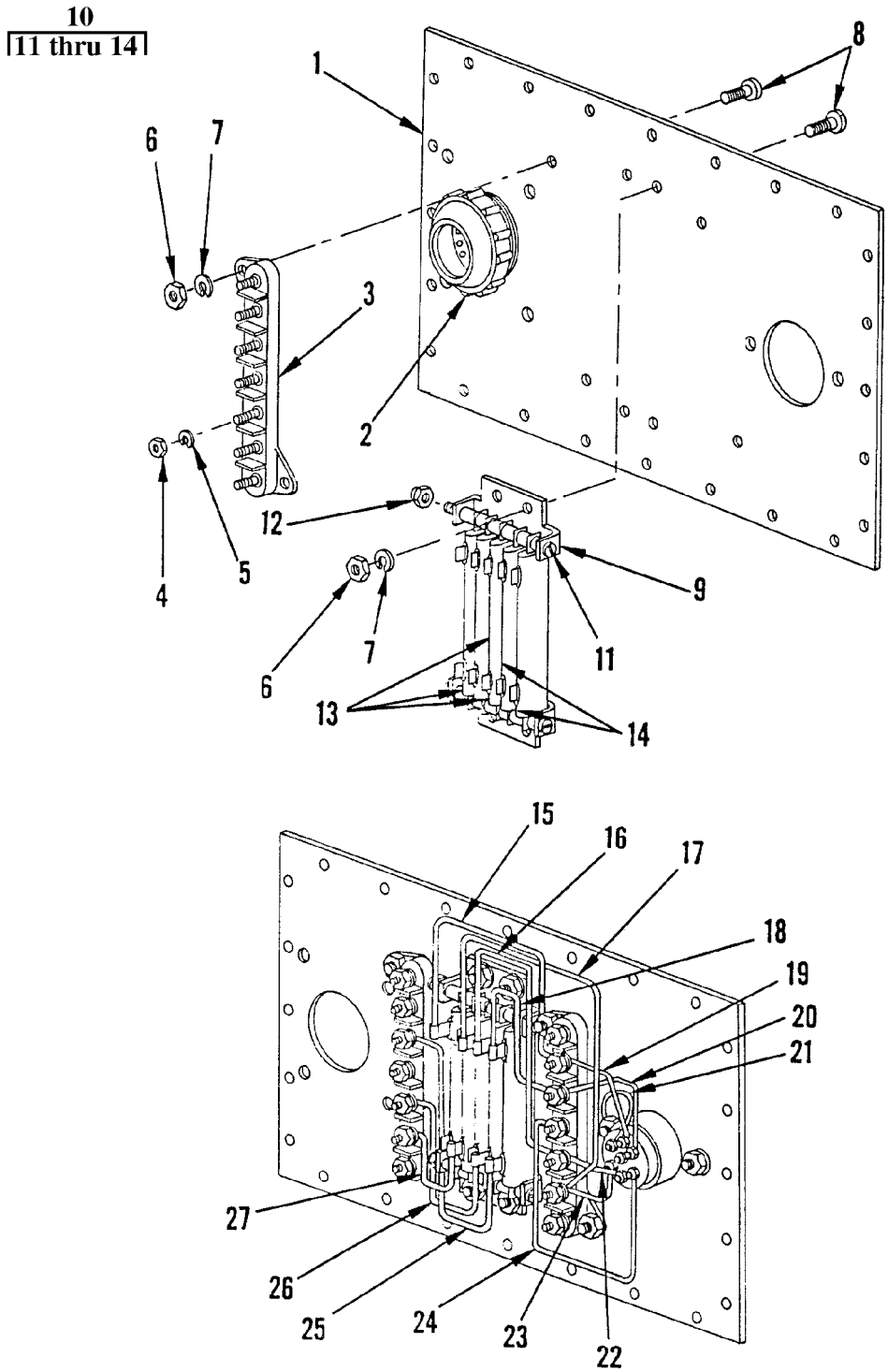

Figure 2. XM1063 Components of Resistor Box and Cover Assembly

(1) ITEM NO	(2) SMR CODE	(3) NSN	(4) CAGEC	(5) PART NUMBER	(6) DESCRIPTION AND USABLE ON CODES(UOC)	(7) QTY
					GROUP 0608 MISCELLANEOUS ITEMS FIG. 2 XM1063 COMPONENTS OF RESISTOR BOX COVER ASSEMBLY (REFER TO FIG. 1 FOR NEXT HIGHER ASSEMBLY)	
1	PFOZZ	5340012820961	19207	12354025	.COVER,ACCESS..... UOC:MEE,	1
2	PAOZZ	5935008463883	96906	MS75021-1	.CONNECTOR,RECEPTACL..... UOC:MEE,	1
3	PAOZZ	5940012830374	19207	12360363	.TERMINAL BOARD..... UOC:MEE,	2
4	PAOZZ	5310009349751	96906	MS35650-302	.NUT,PLAIN,HEXAGON..... UOC:MEE,	14
5	PAOZZ	5310005765752	96906	MS35333-39	.WASHER,LOCK..... UOC:MEE,	14
6	PAOZZ	5310009349758	96906	MS35649-202	.NUT,PLAIN,HEXAGON..... UOC:JNH,	8
7	PAOZZ	5310000453296	96906	MS35338-43	.WASHER,LOCK..... UOC:MEE,	8
8	PAOZZ	5305009846212	96906	MS35206-265	.SCREW,MACHINE..... UOC:MEE,	8
9	PAOZZ	5340012823436	19207	12315505	.BRACKET,DOUBLE ANGL..... UOC:MEE,	2
10	PFOZZ	5905012809947	19207	12360366	.RESISTOR ASSEMBLY..... UOC:MEE,	1
11	PAOZZ	5305009580671	96906	MS35207-274	..SCREW,MACHINE..... UOC:MEE,	2
12	PAOZZ	5310008775797	96906	MS21044N3	..NUT,SELF-LOCKING,HE..... UOC:MEE,	2
13	PAOZZ	5905008459470	81349	RW22-V4R5	..RESISTOR,FIXED,WIRE 4.5 OHMS..... UOC:MEE,	3
14	PAOZZ	5905012860649	81348	RW22V6R0	..RESISTOR,FIXED,WIRE 6 OHMS..... UOC:MEE,	2
15	MOOZZ		19207	12360360-5	.WIRE ASSEMBLY SEE APPENDIX G..... UOC:MEE,	1
16	MOOZZ		19207	12360360-4	.WIRE ASSEMBLY SEE APPENDIX G..... UOC:MEE,	1
17	MOOZZ		19207	12360360-7	.WIRE ASSEMBLY SEE APPENDIX G..... UOC:MEE,	1
18	MOOZZ		19207	12360360-6	.WIRE ASSEMBLY SEE APPENDIX G..... UOC:MEE,	1
19	MOOZZ		19207	12360361-5	.WIRE ASSEMBLY SEE APPENDIX G..... UOC:MEE,	1
20	MOOZZ		19207	12360361-6	.WIRE ASSEMBLY SEE APPENDIX G..... UOC:MEE,	1
21	MOOZZ		19207	12360361-1	.WIRE ASSEMBLY SEE APPENDIX G..... UOC:MEE,	1
22	MOOZZ		19207	12360361-3	.WIRE ASSEMBLY SEE APPENDIX G..... UOC:MEE,	1
23	MOOZZ		19207	12360361-2	.WIRE ASSEMBLY SEE APPENDIX G..... UOC:MEE,	1

(1) ITEM NO	(2) SMR CODE	(3) NSN	(4) CAGEC	(5) PART NUMBER	(6) DESCRIPTION AND USABLE ON CODES(UOC)	(7) QTY
24	MOOZZ		19207	12360361-4	.LEAD,ELECTRICAL SEE APPENDIX G.... UOC:MEE,	1
25	MOOZZ		19207	12360360-3	.WIRE ASSEMBLY SEE APPENDIX G..... UOC:MEE,	1
26	MOOZZ		19207	12360360-1	.WIRE ASSEMBLY SEE APPENDIX G..... UOC:MEE,	1
27	MOOZZ		19207	12360360-2	.WIRE ASSEMBLY SEE APPENDIX G..... UOC:MEE,	1

END OF FIGURE

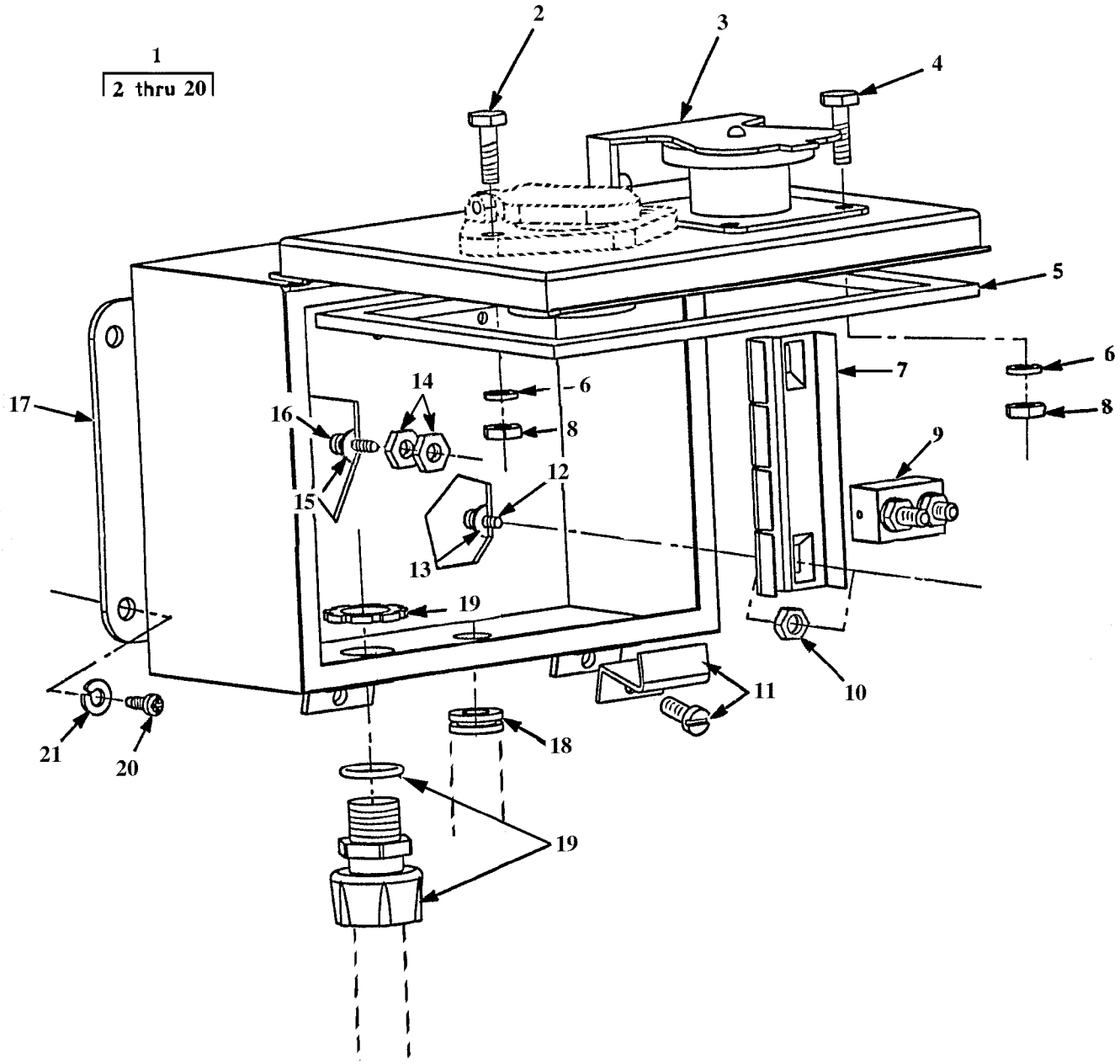

Figure 3. M129A4 Voltage Converter

(1) ITEM NO	(2) SMR CODE	(3) NSN	(4) CAGEC	(5) PART NUMBER	(6) DESCRIPTION AND USABLE ON CODES(UOC)	(7) QTY
					GROUP 0608 MISCELLANEOUS ITEMS FIG. 3 M129A4 VOLTAGE CONVERTER	
1	AOOOO		46564	DT 338	VOLTAGE CONVERTER SOLID STATE..... UOC:JNH,	1
2	PAOZZ	5305007024523	96906	MS35307-306	.SCREW,CAP,HEXAGON H 1/4 DIA X 3/4 INCH LONG X 20 UNC..... UOC:JNH,	2
3	PAOZZ	5935007731428	19207	7731428	.COVER,ELECTRICAL CO..... UOC:JNH,	1
4	PAOZZ	5305007193997	96906	MS35307-303	.SCREW,CAP,HEXAGON H 1/4 DIA X 1/2 INCH LONG X 20 UNC..... UOC:JNH,	4
5	MOOZZ		00843	5406-004	.GASKET PART OF P/N 12360743, SEE APPENDIX G..... UOC:JNH,	1
6	PAOZZ	5310009338121	96906	MS35338-139	.WASHER,LOCK..... UOC:JNH,	6
7	PAOZZ	5925012143228	98343	1512-0-4	.BASE,CIRCUIT BREAKE..... UOC:JNH,	2
8	PAOZZ	5310002509477	96906	MS35649-2254	.NUT,PLAIN,HEXAGON 1/4 DIA HOLE X 20 UNC..... UOC:JNH,	4
9	PAOZZ	5925009001903	13445	30056-15	.CIRCUIT BREAKER..... UOC:JNH,	8
10	PAOZZ	5310009349759	96906	MS35649-284	.NUT,PLAIN,HEXAGON 5/32 DIA HOLE X 32 UNC..... UOC:JNH,	4
11	PAOZZ	5340014248682	00843	Z-L18	.CLAMP,SYNCHRO PART OF P/N 12360743-2..... UOC:JNH,	1
12	PAOZZ	5305000546667	96906	MS51957-42	.SCREW,MACHINE NO.8 X 5/16 LG, 32 UNC..... UOC:JNH,	4
13	PAOZZ	5310002255328	96906	MS15795-841	.WASHER,FLAT..... UOC:JNH,	4
14	PAOZZ	5310009349760	96906	MS35649-204	.NUT,PLAIN,HEXAGON 3/16 DIA HOLE X 24 UNC..... UOC:JNH,	2
15	PAOZZ	5310006191148	96906	MS15795-808	.WASHER,FLAT..... UOC:JNH,	1
16	PAOZZ	5305000509233	96906	MS51957-67	.SCREW,MACHINE..... UOC:JNH,	1
17	MOOZZ		19207	12360743-2	.JUNCTION BOX MAKE FROM JUNTION BOX, P/N 12360743, SEE APPENDIX G... UOC:JNH,	1
18	PAOZZ	5325002766228	70485	A12113	GROMMET,NONMETALLIC..... UOC:JNH,	1
19	PAOZZ		19207	12360387	COUPLING BOSS..... UOC:JNH,	1
20	PAOZZ	5305000526921	96906	MS24629-57	SCREW,TAPPING 1/4 DIA HOLE X 1/2	4

(1) ITEM NO	(2) SMR CODE	(3) NSN	(4) CAGEC	(5) PART NUMBER	(6) DESCRIPTION AND USABLE ON CODES(UOC)	(7) QTY
					INCH LONG..... UOC:JNH,	
21	PAOZZ	5310005825965	96906	MS35338-44	WASHER,LOCK..... UOC:JNH,	4

END OF FIGURE

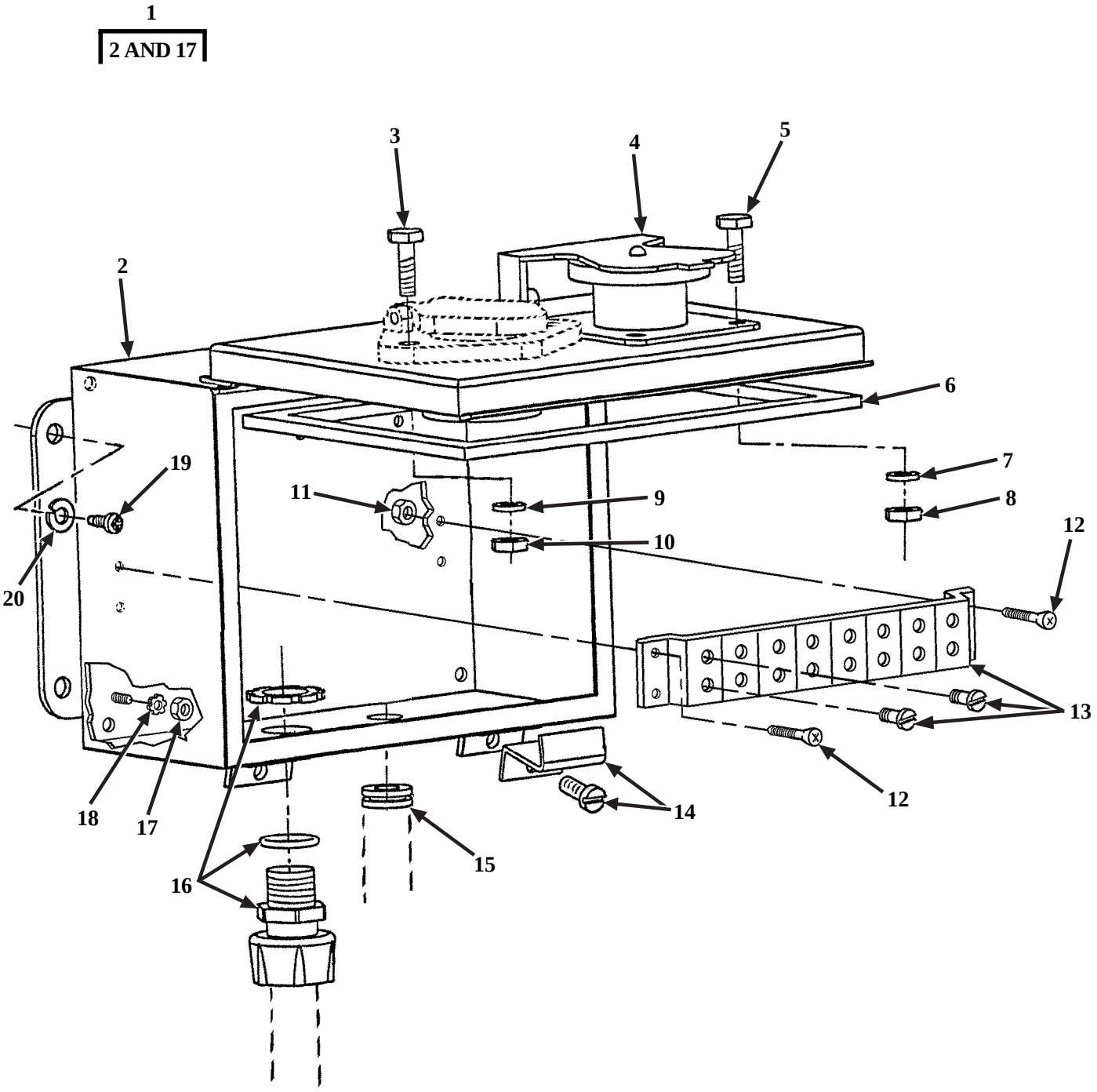

Figure 4. M129A4 12/24 Volt Junction Box (With LED Lighting System)

(1) ITEM NO	(2) SMR CODE	(3) NSN	(4) CAGEC	(5) PART NUMBER	(6) DESCRIPTION AND USABLE ON CODES(UOC)	(7) QTY
					GROUP 0608 MISCELLANEOUS ITEMS FIG. 4 M129A4 12/24 VOLT JUNCTION BOX (WITH LED LIGHTING SYSTEM)	
1	AOOZZ		19207	12360743-1	JUNCTION BOX ASSY REG. NO. NX0RBK AND SUBSEQUENT..... UOC:JNH,	1
2	MOOZZ		19207	12360743-2	.JUNCTION BOX MAKE FROM JUNTION BOX, P/N 12360743, SEE APPENDIX G, REG. NO. NX0RBK AND SUBSEQUENT..... UOC:JNH,	1
3	PAOZZ	5306002264825	80204	B1821BH031C075N	.BOLT,MACHINE 5/16 DIA X 3/4 INCH LONG X 18 UNC, REG. NO. NXORBK AND SUBSEQUENT..... UOC:JNH,	2
4	PAOZZ	5935007731428	19207	7731428	.COVER,ELECTRICAL CO REG. NO. NX0RBK AND SUBSEQUENT..... UOC:JNH,	1
5	PAOZZ	5305000680502	96906	MS90725-6	.SCREW,CAP,HEXAGON H 1/4 DIA X 3/4 INCH LONG X 20 UNC, REG. NO. NXORBK AND SUBSEQUENT..... UOC:JNH,	4
6	MOOZZ		00843	5406-004	.GASKET PART OF P/N 12360743, SEE APPENDIX G, REG. NO. NX0RBK AND SUBSEQUENT..... UOC:JNH,	1
7	PAOZZ	5310005825965	96906	MS35338-44	.WASHER,LOCK REG. NO. NX0RBK AND SUBSEQUENT..... UOC:JNH,	4
8	PAOZZ	5310007616882	96906	MS51967-2	.NUT,PLAIN,HEXAGON 1/4 DIA HOLE, 20 UNC, REG. NO. NX0RBK AND SUBSEQUENT..... UOC:JNH,	4
9	PAOZZ	5310004079566	96906	MS35338-45	.WASHER,LOCK REG. NO. NX0RBK AND SUBSEQUENT..... UOC:JNH,	2
10	PAOZZ	5310008807744	96906	MS51967-5	.NUT,PLAIN,HEXAGON 5/16 X 18 UNC 2B, REG. NO. NX0RBK AND SUBSEQUENT.. UOC:JNH,	2
11	PAOZZ	5310000880553	80205	MS21044N5	.NUT,SELF-LOCKING,HE 5/16 X 24 UNJF, REG. NO. NX0RBK AND SUBSEQUENT..... UOC:JNH,	4
12	PAOZZ	5305009846209	96906	MS35206-262	.SCREW,MACHINE 3/16 DIA X 3/8 INCH LONG X 24 UNC, REG. NO. NX0RBK AND SUBSEQUENT..... UOC:JNH,	4
13	PAOZZ	5940004072125	71785	8-142	.TERMINAL BOARD REG. NO. NX0RBK AND SUBSEQUENT..... UOC:JNH,	1

(1) ITEM NO	(2) SMR CODE	(3) NSN	(4) CAGEC	(5) PART NUMBER	(6) DESCRIPTION AND USABLE ON CODES(UOC)	(7) QTY
14	PAOZZ	5340014248682	00843	Z-L18	.CLAMP,SYNCHRO PART OF P/N 12360743, REG NO. NXORBK AND SUBSEQUENT..... UOC:JNH	2
15	PAOZZ	5325001850001	96906	MS35489-46	.GROMMET,NONMETALLIC REG. NO. NX0RBK AND SUBSEQUENT..... UOC:JNH,	1
16	PAOZZ		19207	12360387	.COUPLING BOSS REG. NO. NX0RBK AND SUBSEQUENT..... UOC:JNH,	1
17	PAOZZ	5310008113494	80205	MS21044N08	.NUT,SELF-LOCKING,HE 0.164 DIA X 32 UNC, REG. NO. NX0RBK AND SUBSEQUENT..... UOC:JNH,	4
18	PAOZZ	5310005990070	96906	MS35333-38	WASHER,LOCK REG. NO. NX0RBK AND SUBSEQUENT..... UOC:JNH,	4
19	PAOZZ	5305000526921	96906	MS24629-57	SCREW,TAPPING REG. NO. NX0RBK AND SUBSEQUENT..... UOC:JNH,	4
20	PAOZZ	5310005825965	96906	MS35338-44	WASHER,LOCK REG. NO. NX0RBK AND SUBSEQUENT..... UOC:JNH,	4

END OF FIGURE

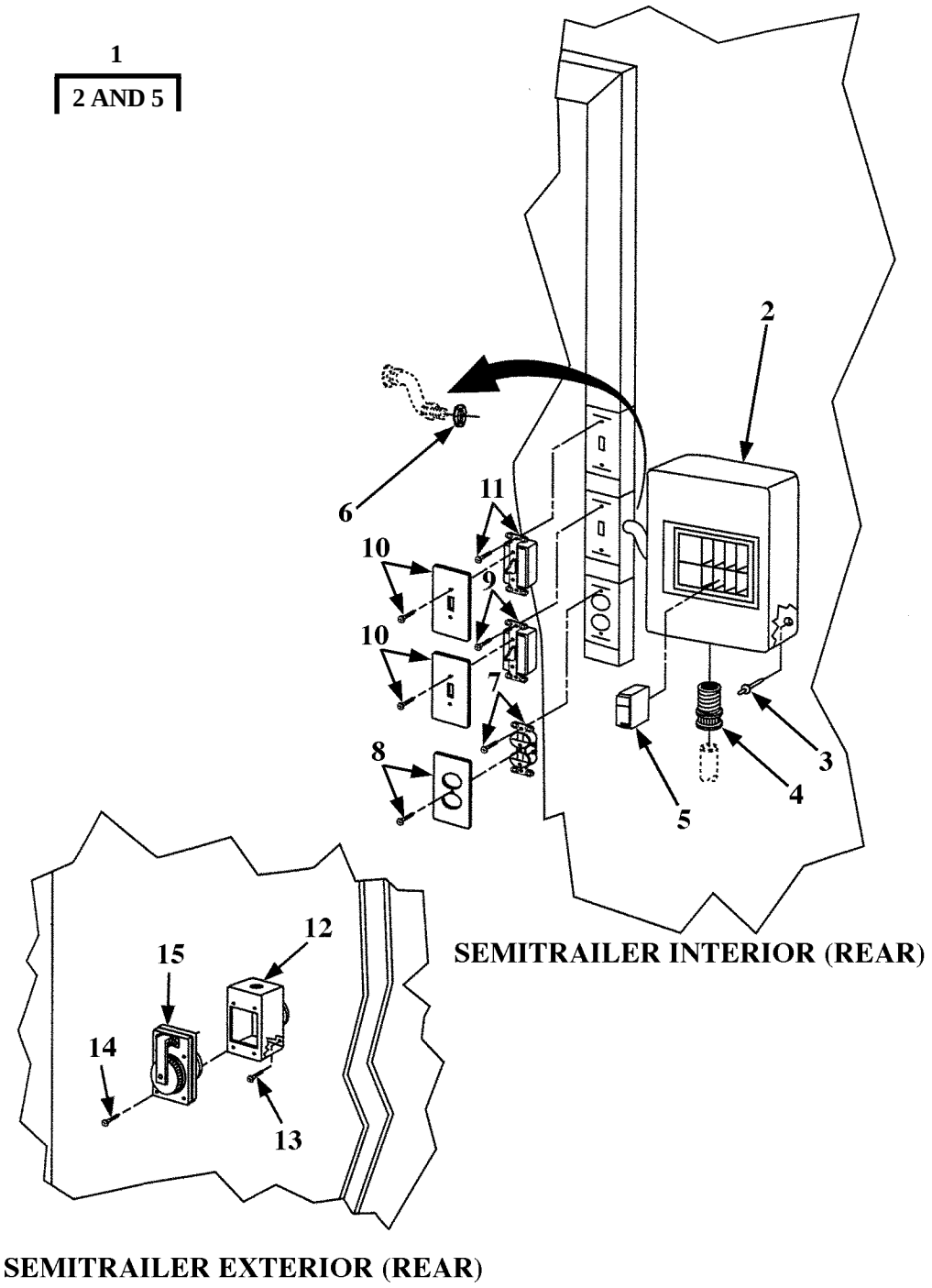

Figure 5. M129A4 Interior Electrical Components

(1) ITEM NO	(2) SMR CODE	(3) NSN	(4) CAGEC	(5) PART NUMBER	(6) DESCRIPTION AND USABLE ON CODES(UOC)	(7) QTY
					GROUP 0608 MISCELLANEOUS ITEMS FIG. 5 M129A4 INTERIOR ELECTRICAL COMPONENTS	
1	AOOOO		19207	12378017	LOAD CENTER..... UOC:JNH,	1
2	PAOZZ	5925012475992	14280	Q06-12L100S	.CIRCUIT BREAKER BOX..... UOC:JNH,	1
3	PAOZZ	5320014415197	98996	RV6606-8-6W	RIVET,BLIND..... UOC:JNH,	14
4	PAOZZ	5975014420232	19207	12368743-1	COUPLING,ELECTRICAL 1 DIA X 1.0 - 11.5 NPT..... UOC:JNH,	1
5	PAOZZ	5925014420431	19207	12368613	.BREAKER,CIRCUIT 10 AMP..... UOC:JNH,	2
5	PAOZZ	5925014420429	19207	12368614	.BREAKER,CIRCUIT 20 AMP..... UOC:JNH,	1
5	PAOZZ	5925014420428	19207	12368615	.BREAKER,CIRCUIT 35 AMP..... UOC:JNH,	1
6	PFOZZ	5975014420234	19207	10947533-3	BONDNUT..... UOC:JNH,	2
7	PAOZZ	5935011079924	19207	10937538	CONNECTOR,RECEPTACL..... UOC:JNH,	1
8	PAOZZ	5975011112203	79725	G-3046BE	PLATE,WALL,ELECTRIC..... UOC:JNH,	1
9	PAOZZ	5930006605584	81348	WS896/2-02A	SWITCH,TOGGLE..... UOC:JNH,	1
10	PAOZZ	5930009815886	80063	SMD379338-3	COVER,ELECTRICAL SW..... UOC:JNH,	1
11	PAOZZ	5930002469322	74545	1282	SWITCH,TOGGLE TWO POSITION..... UOC:JNH,	1
12	PAOZZ	5975010646415	77881	250-L	CONDUIT OUTLET..... UOC:JNH,	1
13	PAOZZ		81348	FF-S-107	BOLT,MACHINE 3/16 DIA X 3/4 INCH LONG..... UOC:JNH,	2
14	PAOZZ	5305004328220	96906	MS51862-35	SCREW,TAPPING..... UOC:JNH,	4
15	PAOZZ	5935004803908	71183	70530-MPI	CONNECTOR,RECEPTACL..... UOC:JNH,	1

END OF FIGURE

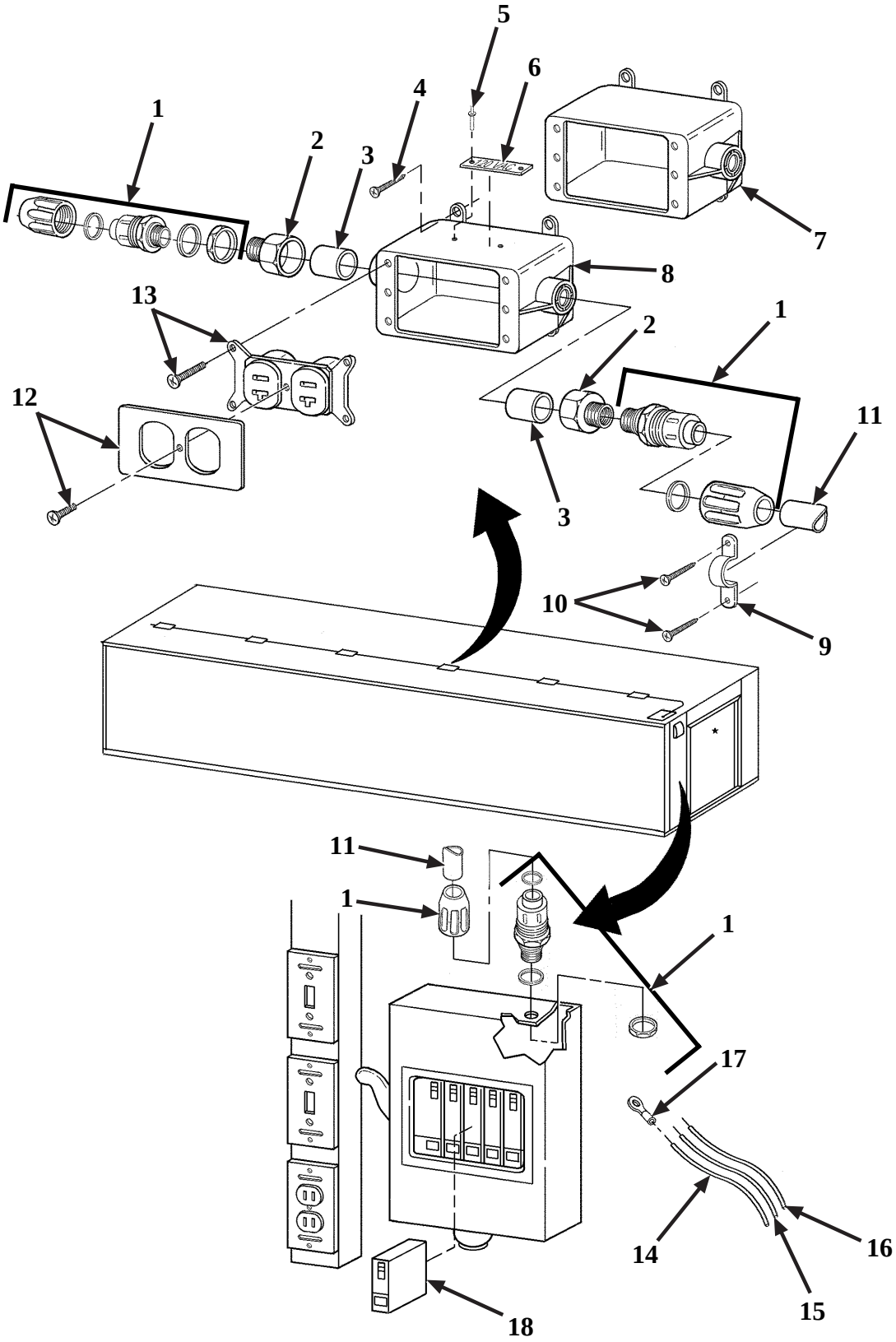

Figure 6. M129A4 Interior Electrical Components

(1) ITEM NO	(2) SMR CODE	(3) NSN	(4) CAGEC	(5) PART NUMBER	(6) DESCRIPTION AND USABLE ON CODES(UOC)	(7) QTY
					GROUP 0608 MISCELLANEOUS ITEMS FIG. 6 M129A4 INTERIOR ELECTRICAL COMPONENTS	
1	PFOZZ		93908	LT43DN	ADAPTER,COMPRESSION PVC, 1/2 INCH DIA, REG. NO. NG0RKB AND SUBSEQUENT. UOC:JNH,	12
2	PFOZZ		93908	E942D	ADAPTER,STRAIGHT PVC, 1/2 FEMALE, REG. NO. NG0RKB AND SUBSEQUENT..... UOC:JNH,	11
3	PFOZZ		93908	PVC,SCHEDULE 40,	HOSE,NONMETALLIC PVC PIPE, 1/2 INCH DIAMETER, LENGTH AS REQUIRED, REG. NO. NG0RKB AND SUBSEQUENT..... UOC:JNH,	V
4	PFOZZ	5305004324253	96906	MS51861-67	SCREW,TAPPING 1/4-14 X 3/4 INCH LONG, REG. NO. NG0RKB AND SUBSEQUENT..... UOC:JNH,	36
5	PAOZZ	5320010156896	81349	M24243/1-B404	RIVET,BLIND REG. NO. NG0RKB AND SUBSEQUENT..... UOC:JNH,	12
6	PAOZZ		19207	12368609	PLATE,IDENTIFICATIO REG NO. NG0RKB AND SUBSEQUENT..... UOC:JNH,	6
7	PFOZZ		93908	E980DFN	JUNCTION BOX,ELECTR END ELECTRICAL BOX, REG. NO. NG0RKB AND SUBSEQUENT. UOC:JNH,	1
8	PFOZZ		93908	E981DFN	JUNCTION BOX,ELECTR INTERMEDIATE ELECTRICAL BOX, REG. NO. NG0RKB AND SUBSEQUENT..... UOC:JNH,	5
9	PFOZZ	5340014129755	93908	E977DC	STRAP,RETAINING REG. NO. NG0RKB AND SUBSEQUENT..... UOC:JNH,	9
10	PAOZZ	5305004324205	96906	MS51861-49	SCREW,TAPPING REG. NO. NG0RKB AND SUBSEQUENT..... UOC:JNH,	24
11	PFOZZ	5975014138329	93908	15005	CONDUIT,NONMETALLIC FLEXIBLE, CUT TO LENGTH AS REQUIRED, REG. NO. NX0RBK AND SUBSEQUENT..... UOC:JNH,	1
12	PAOZZ	5975011112203	79725	G-3046BE	PLATE,WALL,ELECTRIC REG. NO. NG0RKB AND SUBSEQUENT..... UOC:JNH,	6
13	PAOZZ	5935011079924	19207	10937538	CONNECTOR,RECEPTACL REG. NO. NG0RKB AND SUBSEQUENT..... UOC:JNH,	6
14	PAOZZ	6145005787521	81349	M5086/1-12-9	WIRE,ELECTRICAL WHITE 12 AWG, LENGTH AS REQUIRED, REG. NO. NX0RKB AND SUBSEQUENT..... UOC:JNH,	V

(1) ITEM NO	(2) SMR CODE	(3) NSN	(4) CAGEC	(5) PART NUMBER	(6) DESCRIPTION AND USABLE ON CODES(UOC)	(7) QTY
15	PAOZZ	6145000443579	81349	M5086/1-12-0	WIRE,ELECTRICAL BLACK 12 AWG, LENGTH AS REQUIRED, REG. NO. NX0RKB AND SUBSEQUENT..... UOC:JNH,	V
16	PAOZZ	6145012767547	81349	M5086/1-12-5	WIRE,ELECTRICAL GREEN 12 AWG, LENGTH AS REQUIRED, REG. NO. NX0RKB AND SUBSEQUENT..... UOC:JNH,	V
17	PFOZZ		19328	853145	TERMINAL,LUG NO 12-10 1/4 DIA HOLE RING LUG, REG. NO. NX0RKB AND SUBSEQUENT..... UOC:JNH,	6
18	PAOZZ	5925014420429	19207	12368614	BREAKER,CIRCUIT 20 AMP, REG. NO. NGORKB AND SUBSEQUENT..... UOC:JNH,	1

END OF FIGURE

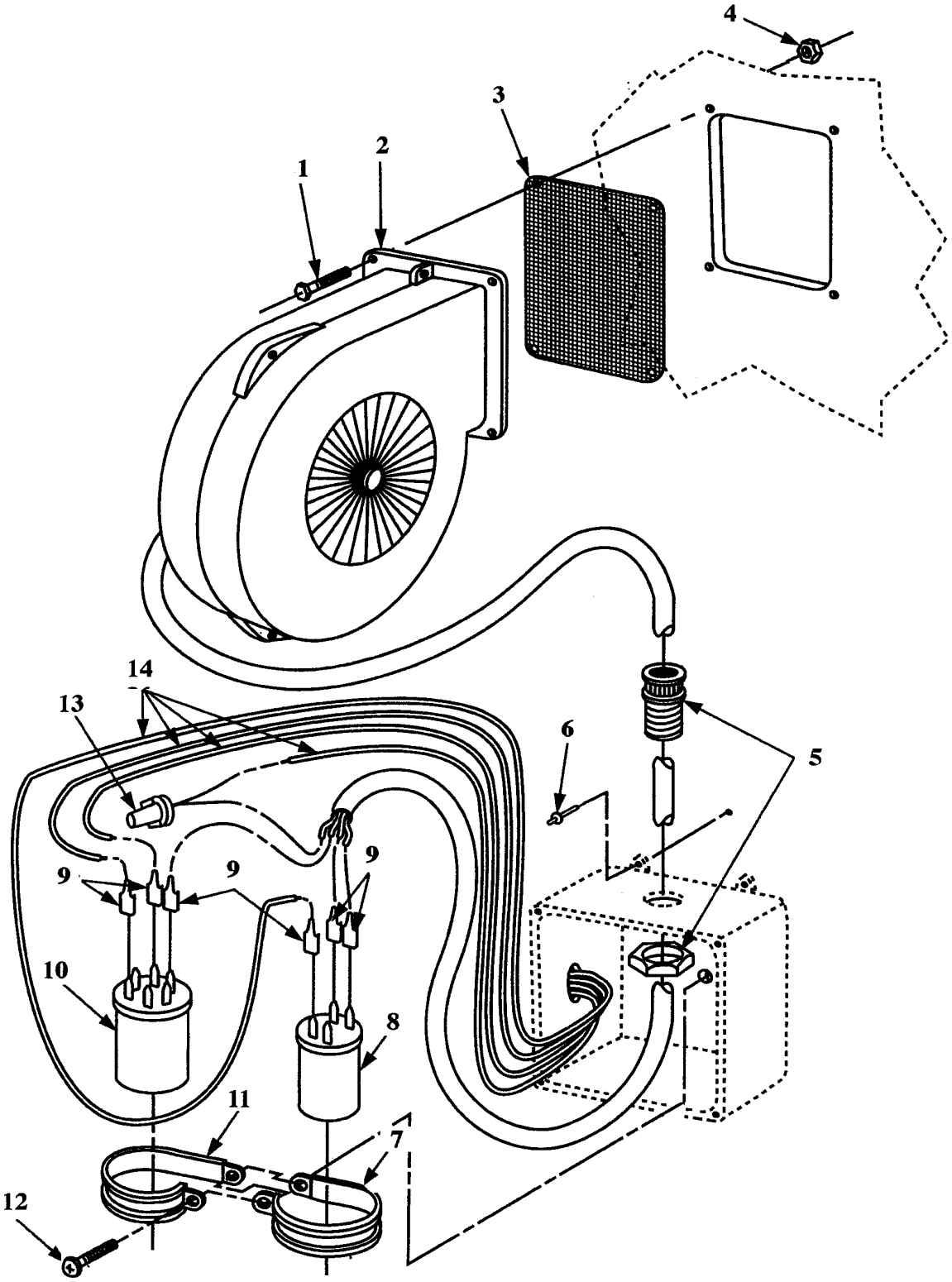

Figure 7. Fan and Capacitor Box Components (M129A4 Only)

(1) ITEM NO	(2) SMR CODE	(3) NSN	(4) CAGEC	(5) PART NUMBER	(6) DESCRIPTION AND USABLE ON CODES(UOC)	(7) QTY
					GROUP 0608 MISCELLANEOUS ITEMS FIG. 7 FAN AND CAPACITOR BOX COMPONENTS (M129A4 ONLY)	
1	PAOZZ	5305000712519	80204	B1821BH025C400N	SCREW,CAP,HEXAGON H 1/4 DIA X 4 INCHES LONG X 20 UNC..... UOC:JNH,	4
2	PAOZZ	4140014498907	62292	G4E180-AB09-15	BLOWER,CENTRIFUGAL..... UOC:JNH,	1
3	PAOZZ		63576	KTS-1810	SCREEN,AIR BLOWER..... UOC:JNH,	1
4	PAOZZ	5310000881251	96906	MS51922-1	NUT,SELF-LOCKING,HE 1/4 DIA HOLE, 20 UNC..... UOC:JNH,	4
5	PAOZZ	5975014420232	19207	12368743-1	COUPLING,ELECTRICAL 1 DIA X 1.0 - 11.5 NPT..... UOC:JNH,	1
6	PAOZZ	5320014415197	98996	RV6606-8-6W	RIVET,BLIND..... UOC:JNH,	4
7	PAOZZ	5340009883186	96906	MS21333-19	CLAMP,LOOP..... UOC:JNH,	1
8	PAOZZ	5910014498852	63576	KTS-1811	CAPACITOR 10 MICROFARED..... UOC:JNH,	1
9	XDOZZ		19207	TBD-02	TERMINAL,LUG 14 AWG..... UOC:JNH,	6
10	PAOZZ	5910014498851	63576	KTS-1812	CAPACITOR 18 MICROFARED..... UOC:JNH,	1
11	PAOZZ	5340000538376	96906	MS21333-17	CLAMP,LOOP..... UOC:JNH,	1
12	PAOZZ	5305004324205	96906	MS51861-49	SCREW,TAPPING..... UOC:JNH,	1
13	XDOZZ		19207	TBD-01	SPLICE,CONDUCTOR WIRE NUT..... UOC:JNH,	1
14	MOOZZ		81349	M13486-1-5-A/R	LEAD,WIRE ELECTRICA MAKE FROM WIRE, ELECTRICAL, P/N M13486-1-5, LENGTH AS REQUIRED..... UOC:JNH,	5

END OF FIGURE

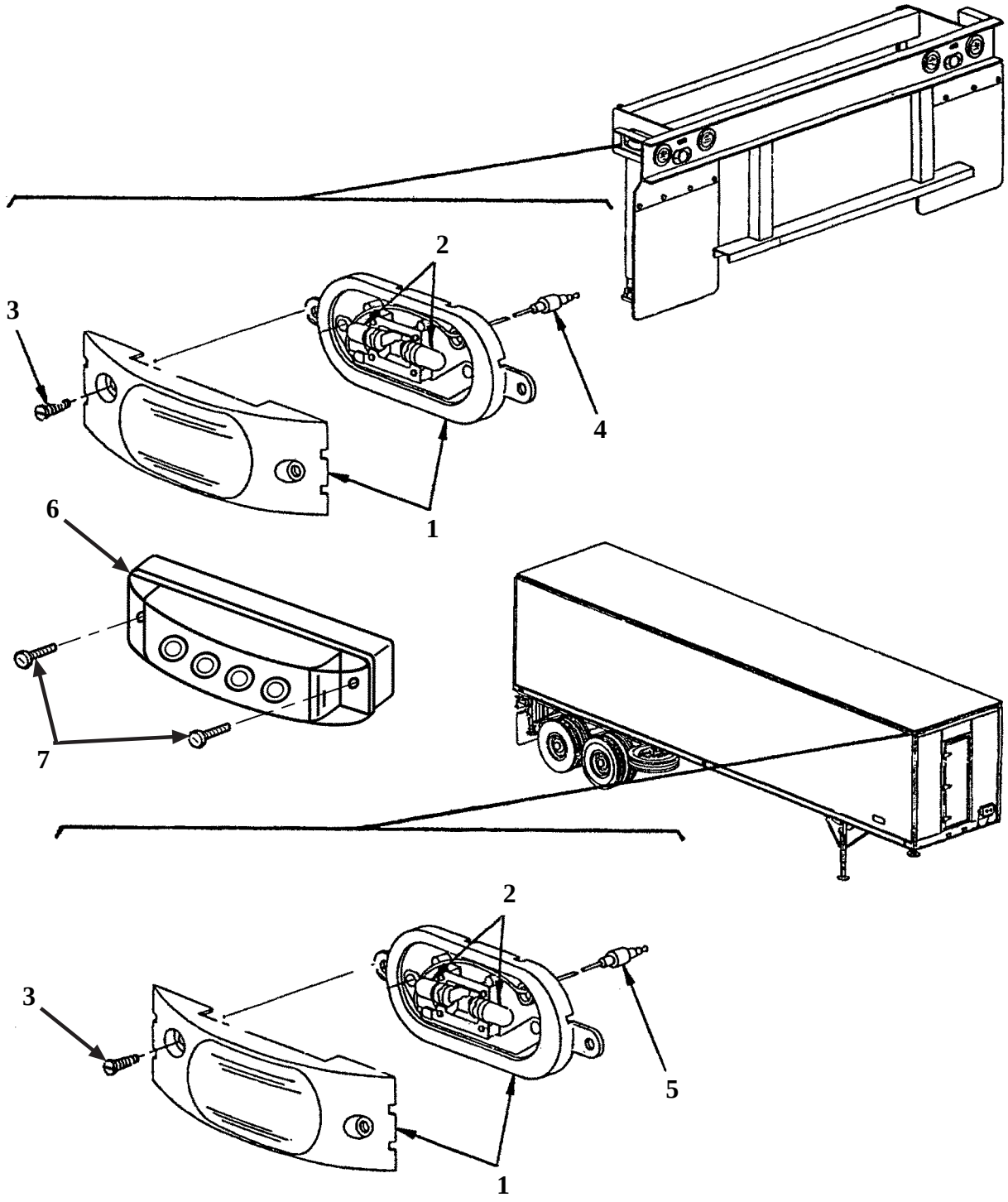

Figure 8. Lights, Marker, Clearance

(1) ITEM NO	(2) SMR CODE	(3) NSN	(4) CAGEC	(5) PART NUMBER	(6) DESCRIPTION AND USABLE ON CODES(UOC)	(7) QTY
					GROUP 0609 LIGHTS FIG. 8 LIGHTS, MARKER, CLEARANCE	
1	PAOZZ		19207	12353969-1	LIGHT,MARKER,CLEARA RED.....	5
1	PAOZZ	6220012875413	19207	12353969-2	LIGHT,MARKER,CLEARA AMBER.....	6
2	PAOZZ	6240001557859	96906	MS15571-8	LAMP,INCANDESCENT PART OF P/N 12353969-2 AND 12353969-1.....	22
3	PAOZZ	5305008550964	96906	MS24629-48	SCREW,TAPPING.....	44
4	PAOZZ	6150012837869	19207	12353970	CABLE ASSEMBLY,SPEC.....	1
5	PAOZZ	6150012809461	19207	12354015	LEAD,ELECTRICAL.....	9
6	PAOZZ		63576	M158-2A	LIGHT,MARKER,CLEARA AMBER, USED ON REG. NO. NX0RKB AND SUBSEQUENT..... UOC:JNH,	6
6	PAOZZ		63576	M158-2R	LIGHT,MARKER,CLEARA RED, USED ON REG. NO. NX0RKB AND SUBSEQUENT..... UOC:JNH,	5
7	PAOZZ	5305000679900	96906	MS24621-60	SCREW,TAPPING USED ON REG. NO. NX0RKB AND SUBSEQUENT..... UOC:JNH,	44

END OF FIGURE

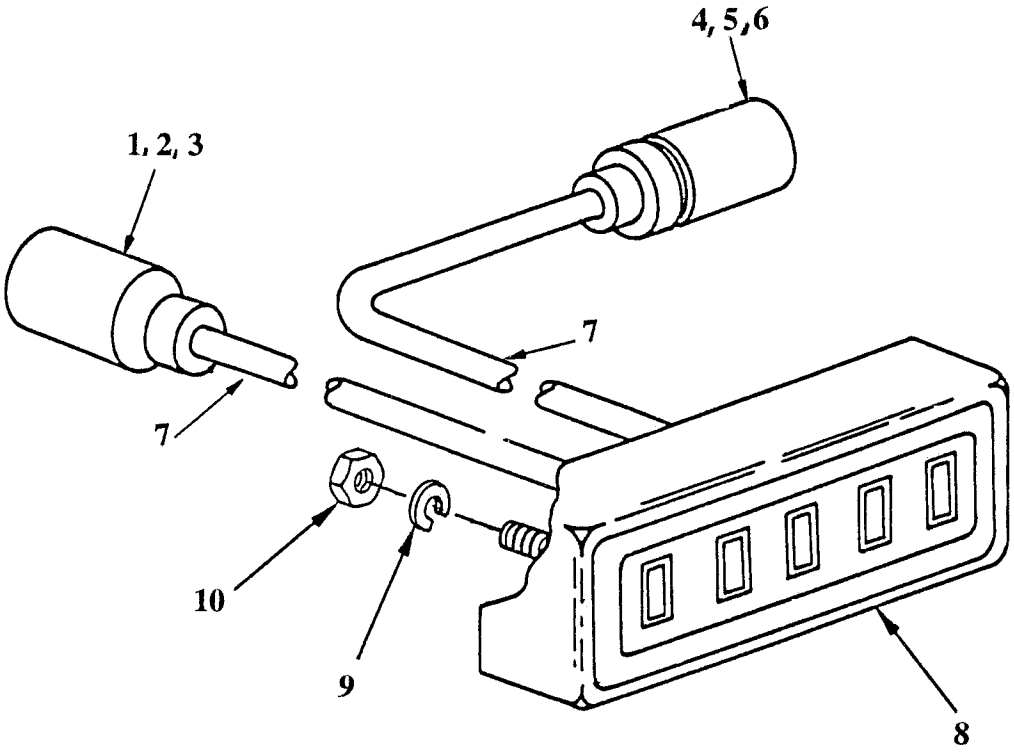

Figure 9. Lights, Blackout, Stop and Tail

(1) ITEM NO	(2) SMR CODE	(3) NSN	(4) CAGEC	(5) PART NUMBER	(6) DESCRIPTION AND USABLE ON CODES(UOC)	(7) QTY
					GROUP 0609 LIGHTS FIG. 9 LIGHTS, BLACKOUT, STOP AND TAIL	
1	PAOZZ	5935005729180	19207	8338566	SHELL,ELECTRICAL CO PART OF P/N 12258212.....	1
2	PAOZZ	5310008338567	19207	8338567	WASHER,SLOTTED PART OF P/N 12258212.....	1
3	PAOZA	5999000572929	19204	572929	CONTACT,ELECTRICAL PART OF P/N 12258212.....	1
4	PAOZZ	5935008338561	19207	8338561	SHELL,ELECTRICAL CO PART OF P/N 12258212.....	1
5	PAOZZ	5940003996676	19207	8338564	TERMINAL ASSEMBLY PART OF P/N 12258212.....	1
6	PAOZZ	5970008338562	19207	8338562	INSULATOR,BUSHING PART OF P/N 12258212.....	1
7	MOOZZ		19207	12258212-9	WIRE,ELECTRICAL PART OF P/N 12258212, MAKE FROM WIRE, ELECTRICAL, P/N M13486-1-4, 16 AWG, 9 3/16 INCHES LONG.....	1
8	PAOZZ	6220010885915	19207	12258212	TAILLIGHT ASSY,BLAC.....	2
9	PAOZZ	5310000453299	96906	MS35338-42	WASHER,LOCK.....	4
10	PAOZZ	5310009349757	96906	MS35649-282	NUT,PLAIN,HEXAGON.....	4

END OF FIGURE

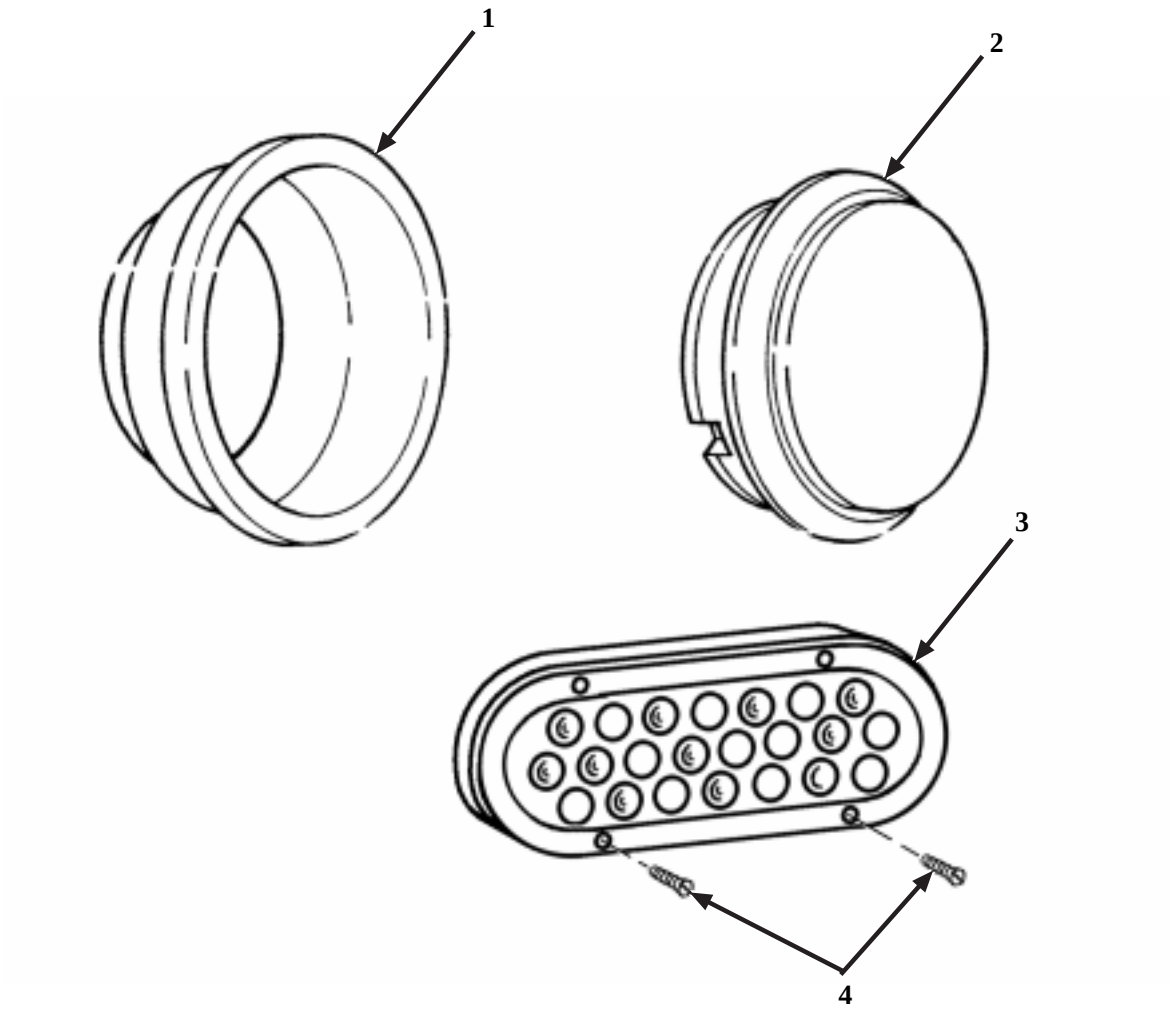

Figure 10. Lights, Turn and Stop

(1) ITEM NO	(2) SMR CODE	(3) NSN	(4) CAGEC	(5) PART NUMBER	(6) DESCRIPTION AND USABLE ON CODES(UOC)	(7) QTY
					GROUP 0609 LIGHTS FIG. 10 LIGHTS, TURN AND STOP	
1	PAOZZ	5340012827663	19207	12353971	CAP,PROTECTIVE,DUST.....	4
2	PAOZZ	6220012841880	19207	12353972	LAMP UNIT,VEHICULAR.....	4
3	PAOZZ		63576	M423R	LIGHT,VEHICULAR,LED RED LED, STOP/TAILLIGHT, USED ON REG. NO. NX0RKB AND SUBSEQUENT..... UOC:JNH,	4
4	PAOZZ	5305000679900	96906	MS24621-60	SCREW,TAPPING USED ON REG. NO. NX0RKB AND SUBSEQUENT..... UOC:JNH,	16

END OF FIGURE

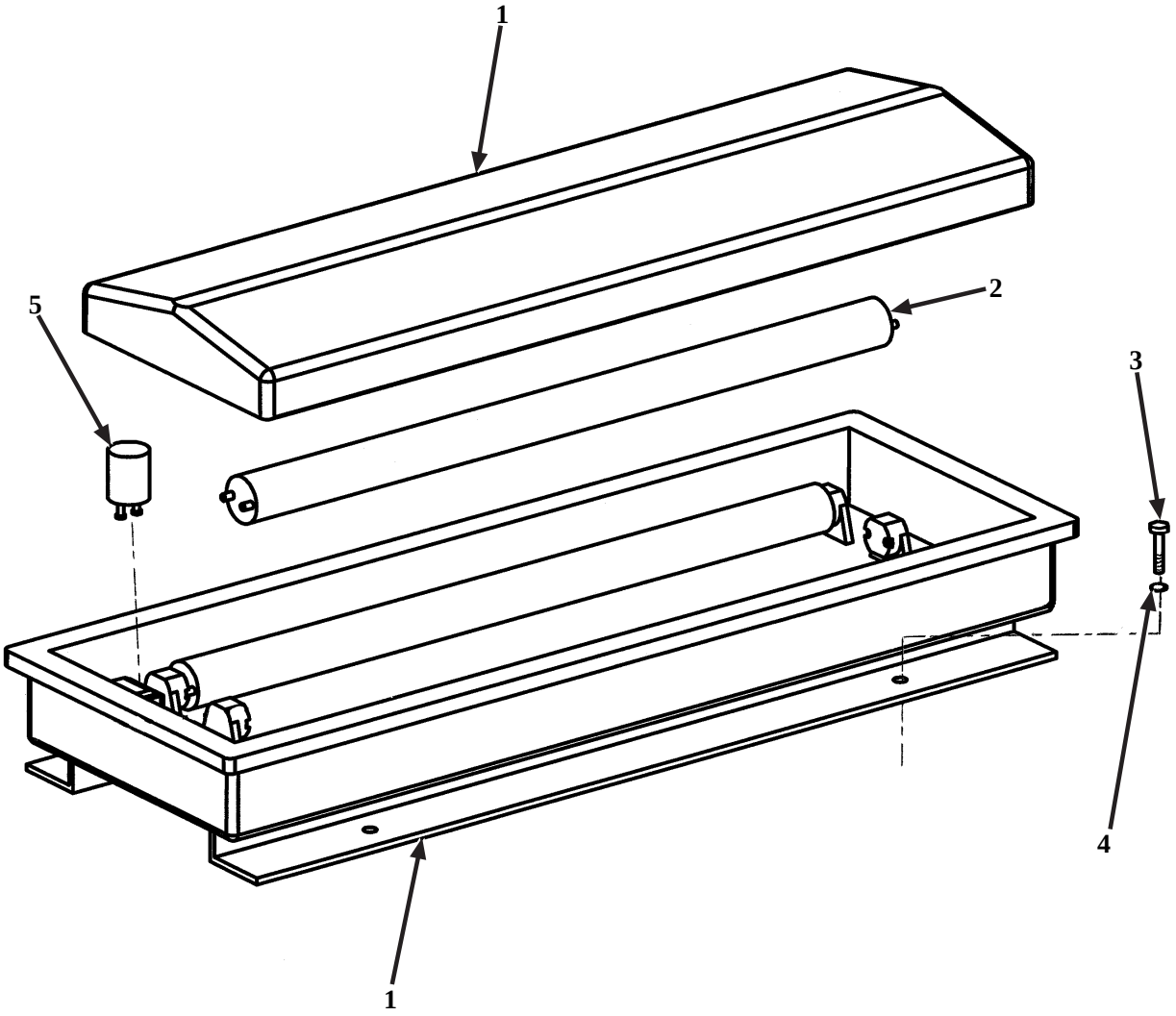

Figure 11. M129A4 Interior Lighting Fixtures

(1) ITEM NO	(2) SMR CODE	(3) NSN	(4) CAGEC	(5) PART NUMBER	(6) DESCRIPTION AND USABLE ON CODES(UOC)	(7) QTY
					GROUP 0609 LIGHTS FIG. 11 M129A4 INTERIOR LIGHT FIXTURES	
1	PAOOO	6210005480222	81349	M16377/12-333.1	FIXTURE,LIGHTING..... UOC:JNH,	6
2	PAOZZ	6240001522996	08108	F20T12/CW	LAMP,FLUORESCENT PART OF P/N M16377/12-333.1..... UOC:JNH,	18
3	PAOZZ	5305000680509	80204	B1821BH025C125N	SCREW,CAP,HEXAGON H 1/4 DIA X 1 1/4 INCH LONG X 20 UNC..... UOC:JNH,	24
4	PAOZZ	5310005501130	96906	MS35333-40	WASHER,LOCK..... UOC:JNH,	24
5	PAOZZ	6250002992884	91595	FS2	STARTER,FLUORESCENT PAT OF P/N M16377/12-333.1..... UOC:JNH,	18

END OF FIGURE

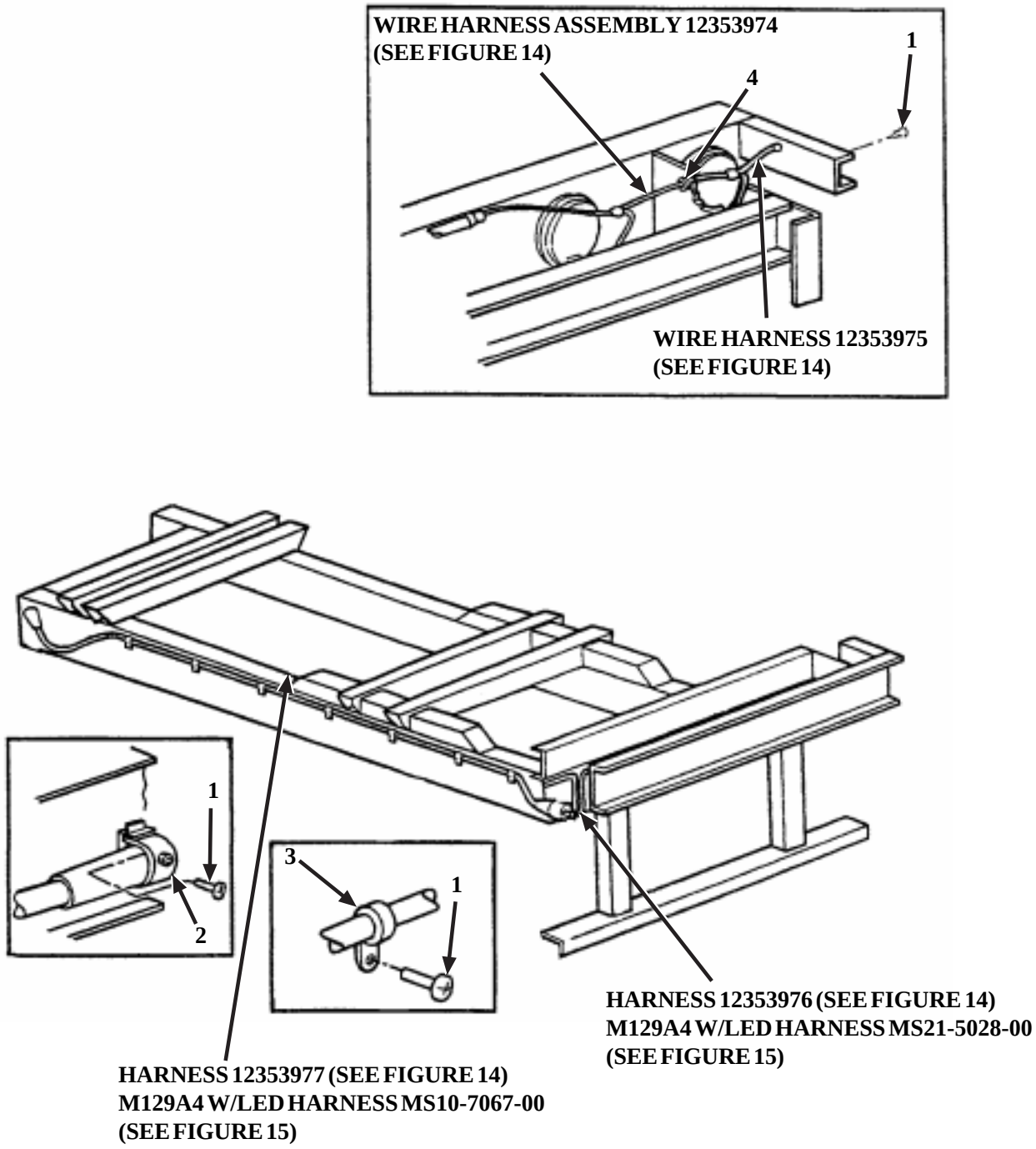

Figure 12. Wiring Harness Attaching Parts, Dolly

(1) ITEM NO	(2) SMR CODE	(3) NSN	(4) CAGEC	(5) PART NUMBER	(6) DESCRIPTION AND USABLE ON CODES(UOC)	(7) QTY
					GROUP 0613 HULL OR CHASSIS WIRING HARNESS FIG. 12 WIRING HARNESS ATTACHING PARTS, DOLLY	
1	PAOZZ	5305008550964	96906	MS24629-48	SCREW,TAPPING.....	18
2	PAOZZ	4730012828505	40670	12354144	CLAMP,SPECIAL.....	2
3	PAOZZ	5340000572906	96906	MS21333-73	CLAMP,LOOP.....	14
4	PAOZZ	5325002766098	96906	MS35489-78	GROMMET,NONMETALLIC.....	2

END OF FIGURE

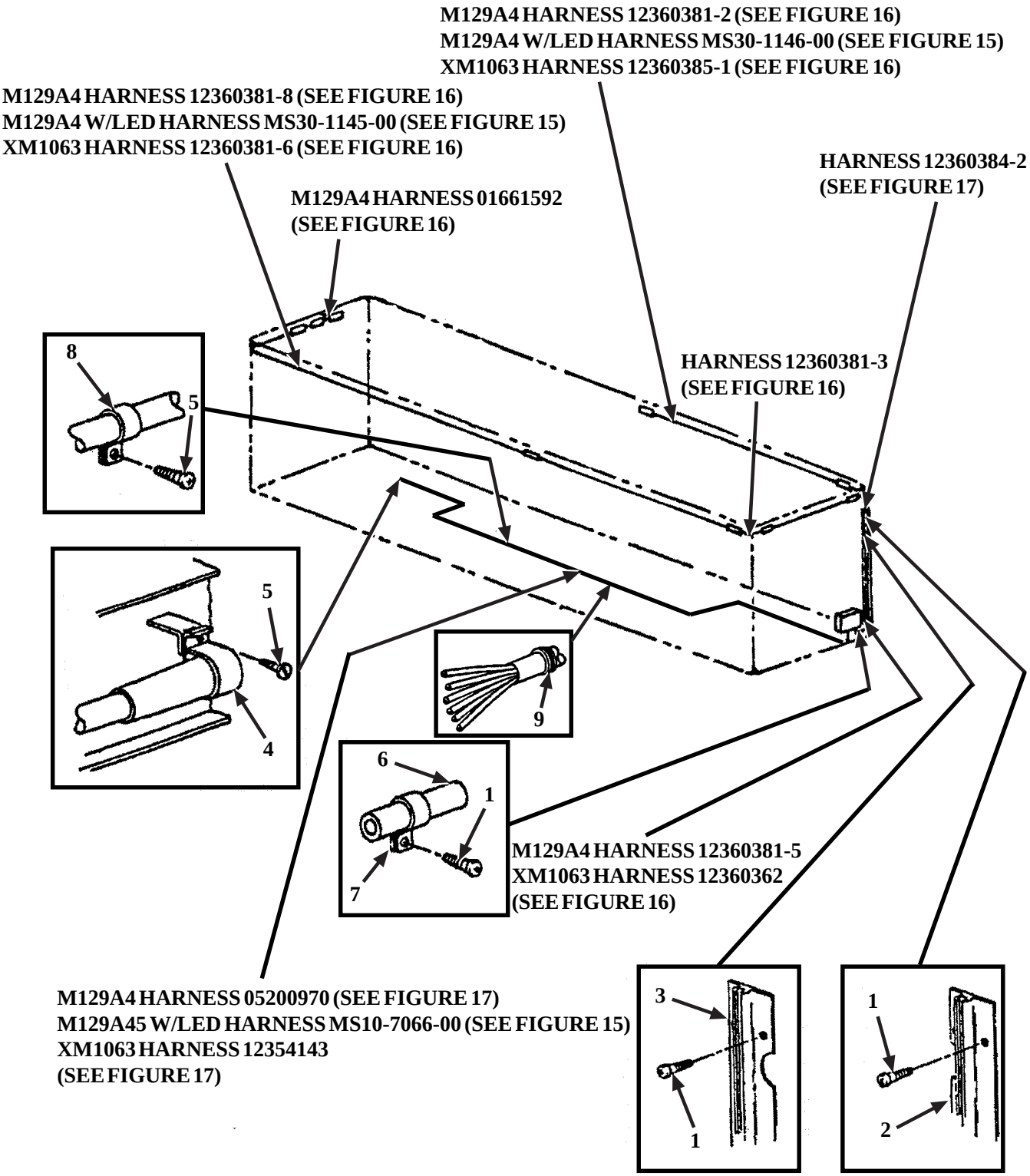

Figure 13. Wiring Harness Attaching Parts, Van

(1) ITEM NO	(2) SMR CODE	(3) NSN	(4) CAGEC	(5) PART NUMBER	(6) DESCRIPTION AND USABLE ON CODES(UOC)	(7) QTY
					GROUP 0613 HULL OR CHASSIS WIRING HARNESS FIG. 13 WIRING HARNESS ATTACHING PARTS, VAN	
1	PAOZZ	5305008550958	96906	MS24629-45	SCREW,TAPPING..... UOC:MEE	41
1	PAOZZ	5305008550958	96906	MS24629-45	SCREW,TAPPING 3/8 X PAN, 3/16 X 3/8 INCH LONG..... UOC:JNH,	44
2	XBOZZ		19207	12354149-1	CLAMP,LOOP LEFT HAND.....	1
3	XBOZZ		19207	12354149-2	CLAMP,LOOP RIGHT HAND.....	1
4	PAOZZ	4730012828505	81834	12354144	CLAMP,SPECIAL.....	1
5	PAOZZ	5305008550964	96906	MS24629-48	SCREW,TAPPING..... UOC:MEE,	17
5	PAOZZ	5305008550964	96906	MS24629-48	SCREW,TAPPING 23/64 X PAN NO. 2, 3/16 X 3/4 INCH LONG..... UOC:JNH,	13
6	MOOZZ		19207	12368758-34	HOSE,NONMETALLIC MAKE FROM HOSE, NONMETALLIC, P/N 246115, 34 INCHES LONG..... UOC:JNH,	1
6	MOOZZ		19207	CPR104420-2-1	HOSE,NONMETALLIC MAKE FROM HOSE, NONMETALLIC, P/N 246115, LENGTH AS REQUIRED..... UOC:MEE,	1
7	PAOZZ	5340008272453	96906	MS35150-5	STRAP,RETAINING..... UOC:MEE,	1
7	PAOZZ	5340008272453	96906	MS35150-5	STRAP,RETAINING..... UOC:JNH,	2
8	PAOZZ	5340000572906	96906	MS21333-73	CLAMP,LOOP..... UOC:MEE	16
8	PAOZZ	5340000572906	96906	MS21333-73	CLAMP,LOOP..... UOC:JNH,	12
9	PAOZZ	5325001850001	96906	MS35489-46	GROMMET,NONMETALLIC..... UOC:MEE,	3
9	PAOZZ	5325001850001	96906	MS35489-46	GROMMET,NONMETALLIC..... UOC:JNH,	6

END OF FIGURE

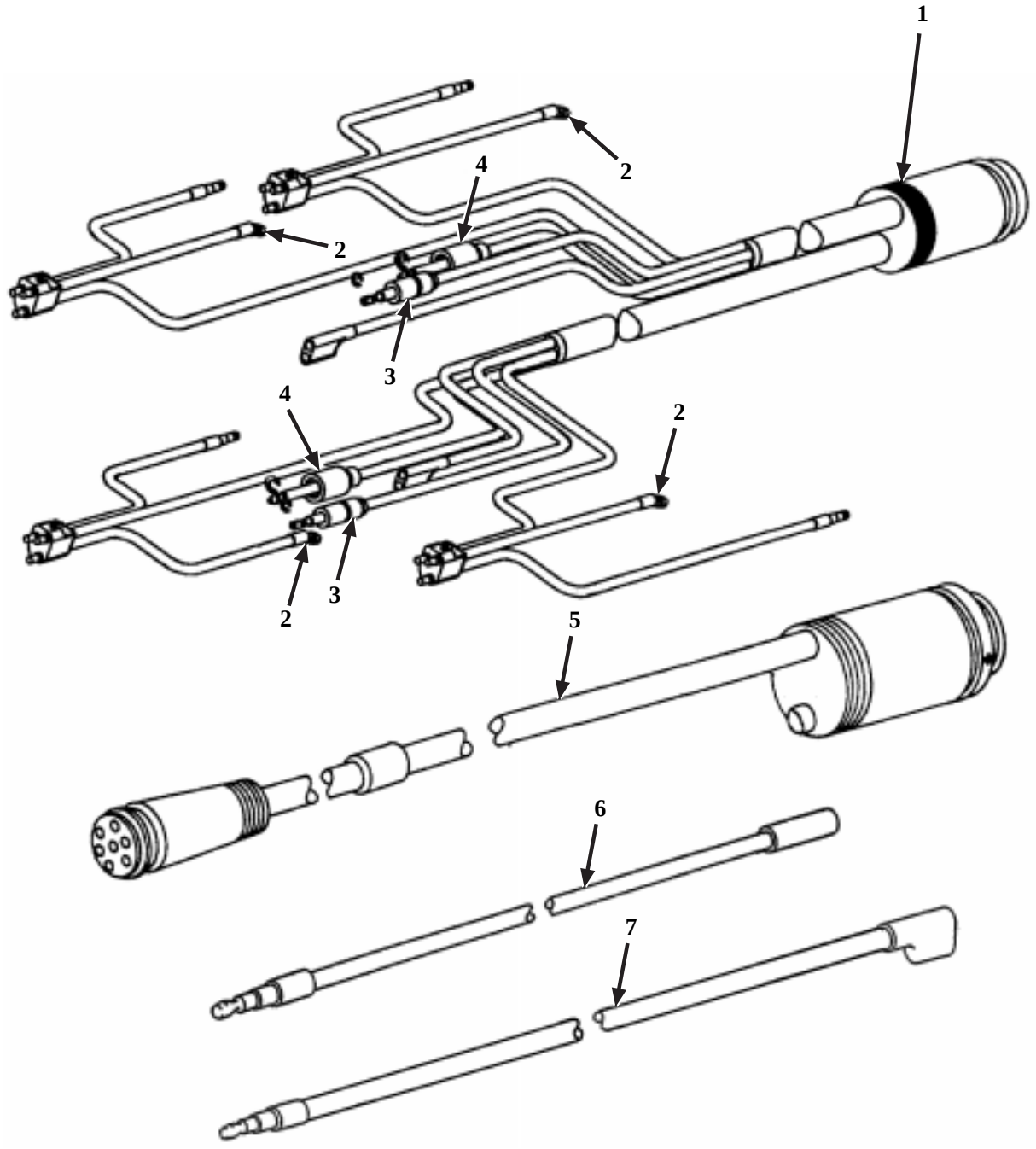

Figure 14. Wiring Harnesses, Dolly

(1) ITEM NO	(2) SMR CODE	(3) NSN	(4) CAGEC	(5) PART NUMBER	(6) DESCRIPTION AND USABLE ON CODES(UOC)	(7) QTY
					GROUP 0613 HULL AND CHASSIS WIRING HARNESS FIG. 14 WIRING HARNESSES, DOLLY	
1	PAOZZ	6150012867510	19207	12353976	WIRING HARNESS.....	1
2	PAOZZ	5940001141300	96906	MS20659-105	TERMINAL,LUG PART OF P/N 12353976..	4
3	PAOZZ	5935001140607	16528	MS27143-1	CONNECTOR,PLUG,ELEC PART OF P/N 12353976.....	2
4	PAOZA	5935011119474	96906	MS27142-1	CONNECTOR,PLUG,ELEC PART OF P/N 12353976.....	2
5	PAOZZ	6150012836934	19207	12353977	CABLE ASSEMBLY,SPEC.....	1
6	PAOZZ	6150012843917	19207	12353975	LEAD,ELECTRICAL..... UOC:MEE,	1
6	PAOZZ	6150012843917	19207	12353975	LEAD,ELECTRICAL..... UOC:JNH,	2
7	PAOZZ	6150012842735	19207	12353974	LEAD,ELECTRICAL..... UOC:MEE,	1
7	PAOZZ	6150012842735	19207	12353974	LEAD,ELECTRICAL..... UOC:JNH,	2

END OF FIGURE

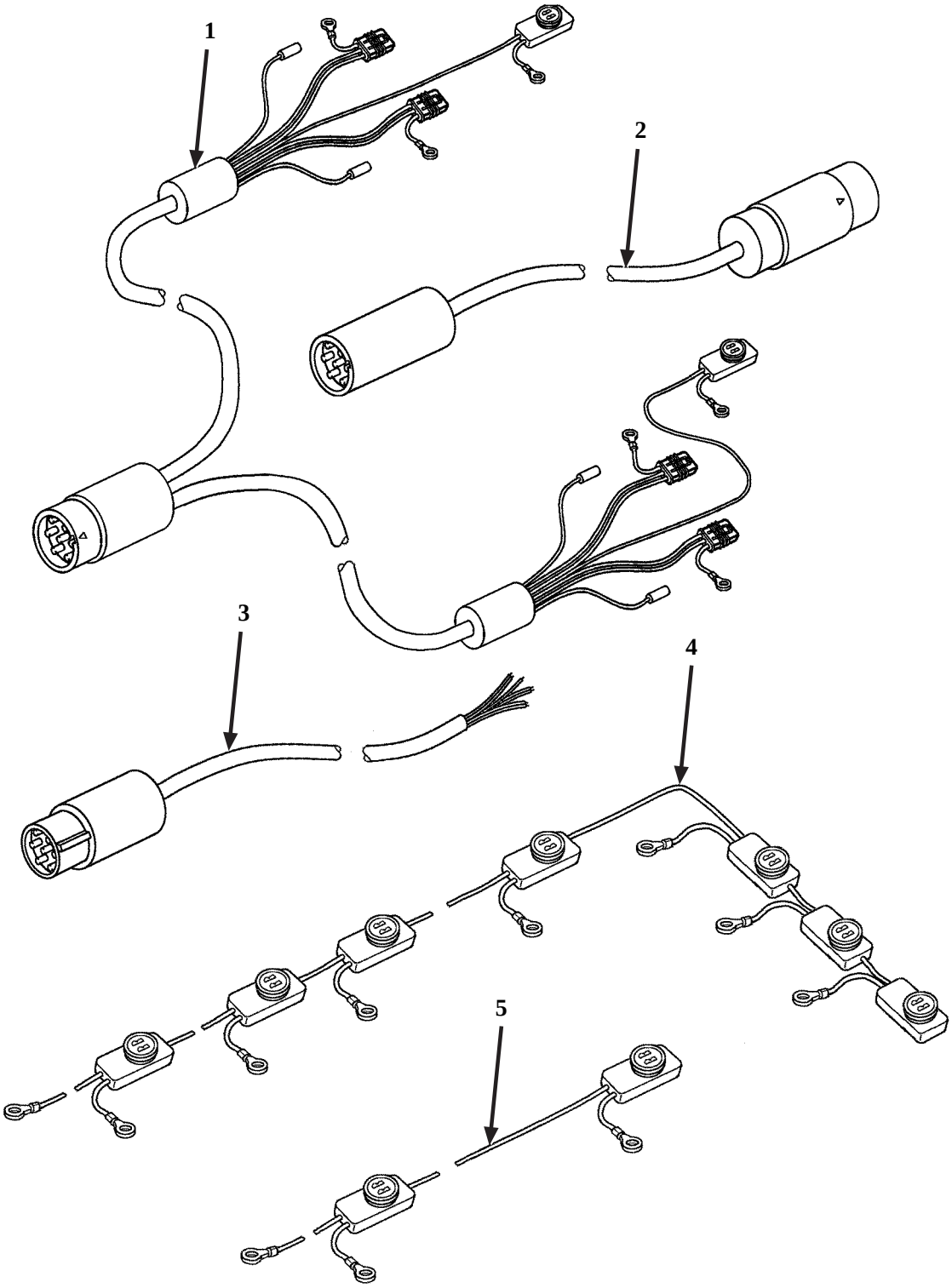

Figure 15. M129A4 Dolly/Van Wiring Harnesses (with LED Lighting System)

(1) ITEM NO	(2) SMR CODE	(3) NSN	(4) CAGEC	(5) PART NUMBER	(6) DESCRIPTION AND USABLE ON CODES(UOC)	(7) QTY
					GROUP 0613 HULL OR CHASSIS WIRING HARNESS FIG. 15 M129A4 DOLLY/VAN WIRING HARNESSES (WITH LED LIGHTING SYSTEM)	
1	PAOZZ		63576	MS21-5028-00	CABLE ASSEMBLY,SPEC STOP/TAILLIGHT HARNESS, USED ON REG. NO. NX0RKB AND SUBSEQUENT..... UOC:JNH,	1
2	PAOZZ		63576	MS10-7067-00	CABLE ASSEMBLY,SPEC DOLLY HARNESS, USED ON REG. NO. NX0RKB AND SUBSEQUENT..... UOC:JNH,	1
3	PAOZZ		63576	MS10-7066-00	CABLE ASSEMBLY,SPEC JUNCTION BOX TO DOLLY HARNESS, USED ON REG. NO. NX0RKB AND SUBSEQUENT..... UOC:JNH,	1
4	PAOZZ		63576	MS30-1145-00	CABLE ASSEMBLY,SPEC CURBSIDE MARKER LIGHTS HARNESS, USED ON REG. NO. NX0RKB AND SUBSEQUENT..... UOC:JNH,	1
5	PAOZZ		63576	MS30-1146-00	CABLE ASSEMBLY,SPEC ROADSIDE MARKER LIGHTS HARNESS, USED ON REG. NO. NX0RKB AND SUBSEQUENT..... UOC:JNH,	1

END OF FIGURE

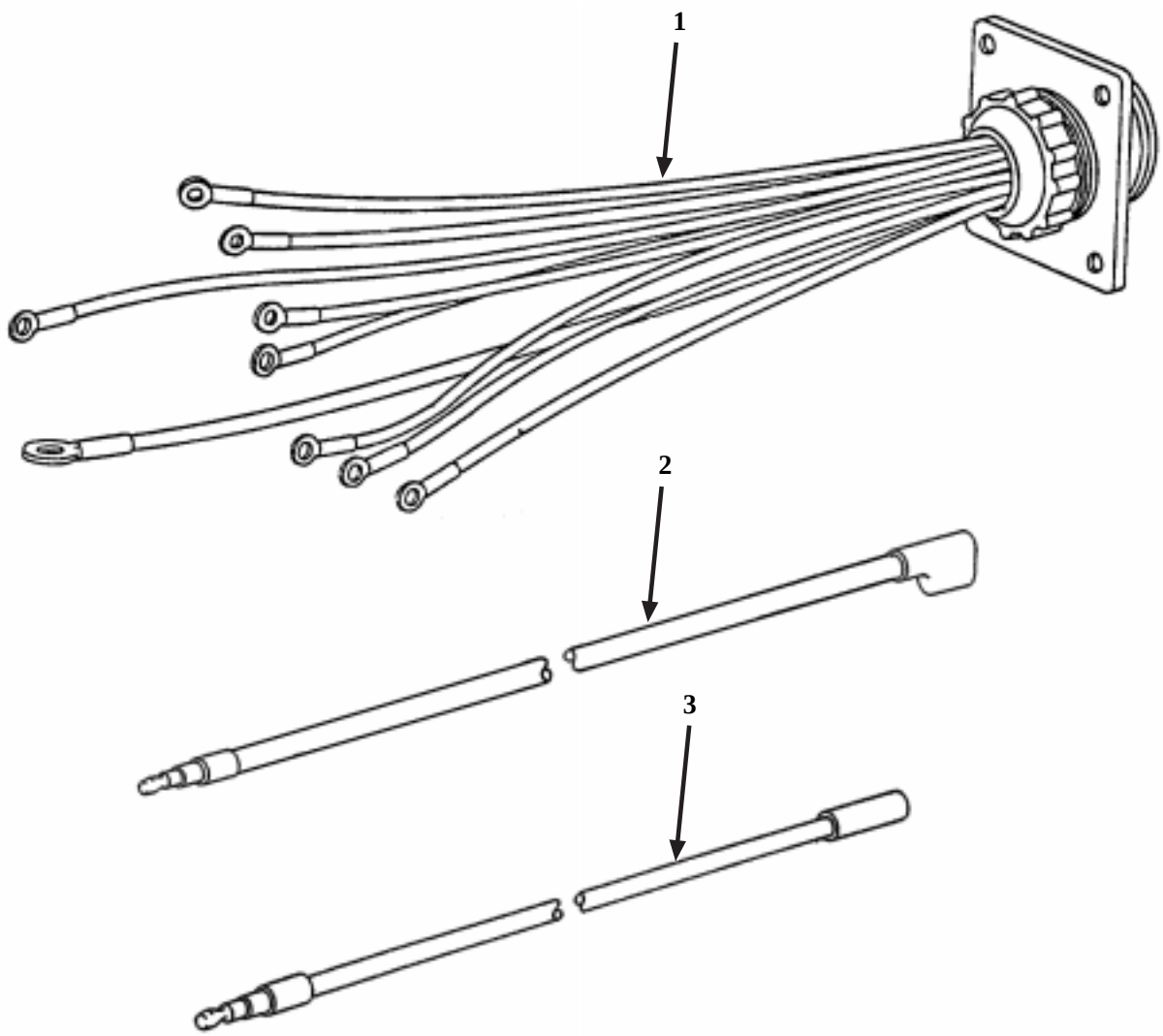

Figure 16. Van Body Wiring Harnesses

(1) ITEM NO	(2) SMR CODE	(3) NSN	(4) CAGEC	(5) PART NUMBER	(6) DESCRIPTION AND USABLE ON CODES(UOC)	(7) QTY
					GROUP 0613 HULL OR CHASSIS WIRING HARNESS FIG. 16 VAN BODY WIRING HARNESSES	
1	PAOZZ		19207	12360362	CABLE ASSEMBLY,POWE..... UOC:MEE,	1
2	PAOZZ	6150014424025	19207	12360381-1	WIRING HARNESS 80 3/8 INCHES LONG.. UOC:JNH,	1
2	PAOZZ	6150014419359	19207	12360381-2	WIRING HARNESS 202 3/16 INCHES LONG..... UOC:JNH,	1
2	PAOZZ	6150012804644	19207	12360381-3	CABLE ASSEMBLY,SPEC 12 INCHES LONG. UOC:MEE,	3
2	PAOZZ	6150012804644	19207	12360381-3	CABLE ASSEMBLY,SPEC 12 INCHES LONG. UOC:JNH,	2
2	PAOZZ	6150012804645	19207	12360381-4	CABLE ASSEMBLY,SPEC 234 INCHES LONG..... UOC:MEE,	1
2	PAOZZ	6150012804646	19207	12360381-5	CABLE ASSEMBLY,SPEC 86 3/8 INCHES LONG..... UOC:JNH,	1
2	PAOZZ	6150012804647	19207	12360381-6	CABLE ASSEMBLY,SPEC 279 INCHES LONG..... UOC:MEE,	1
2	PAOZZ	6150014419353	19207	12360381-8	WIRING HARNESS 244 5/8 INCHES LONG. UOC:JNH,	1
3	PAOZZ	6150014422052	81834	01661592	LEAD,ELECTRICAL 12 INCHES LONG..... UOC:JNH,	1
3	PAOZZ	6150012812131	19207	12360385-1	LEAD,ELECTRICAL 240 INCHES LONG.... UOC:MEE,	1

END OF FIGURE

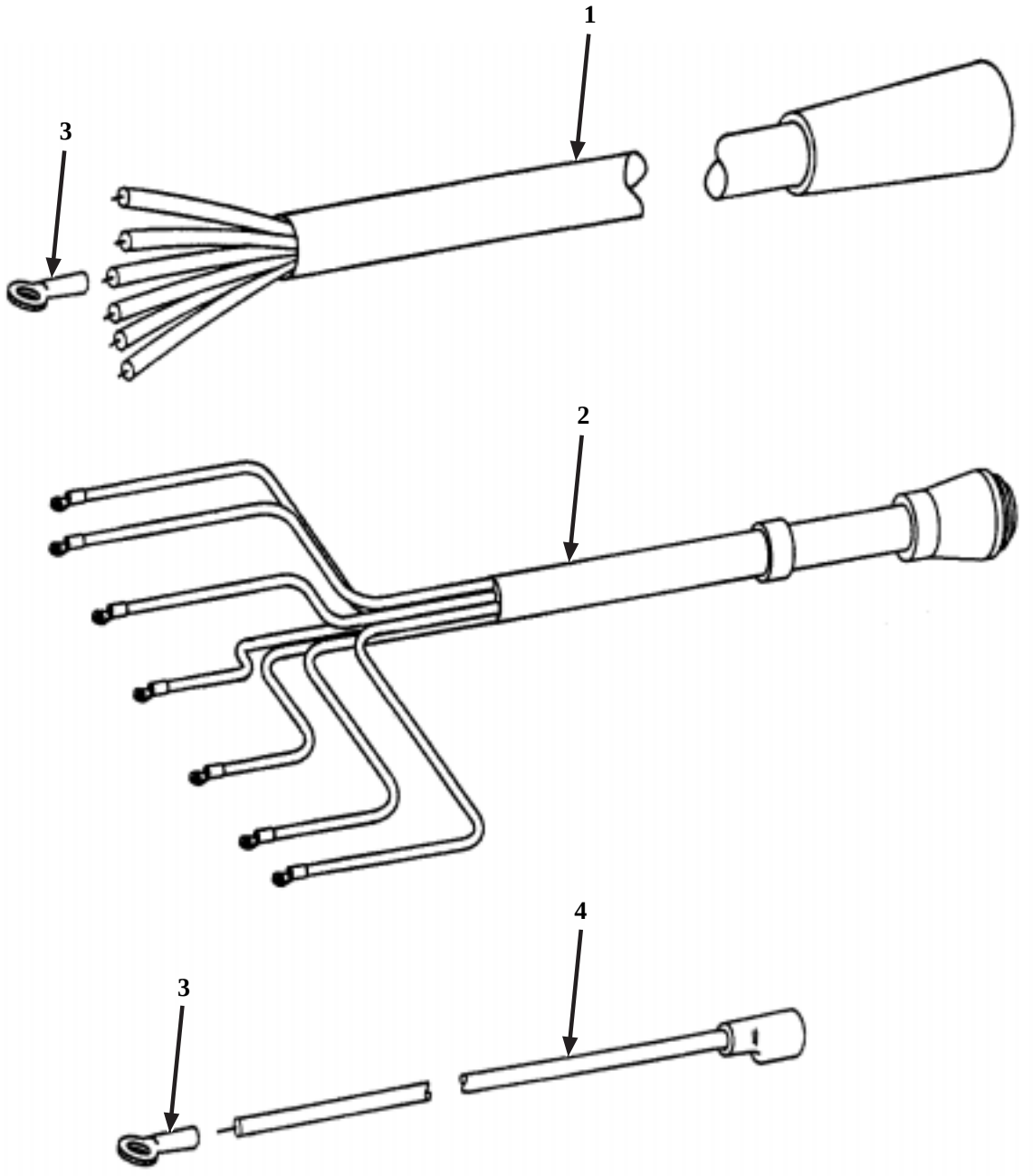

Figure 17. Van Body Wiring Harnesses

(1) ITEM NO	(2) SMR CODE	(3) NSN	(4) CAGEC	(5) PART NUMBER	(6) DESCRIPTION AND USABLE ON CODES(UOC)	(7) QTY
					GROUP 0613 HULL OR CHASSIS WIRING HARNESS FIG. 17 VAN BODY WIRING HARNESSES	
1	PAOZZ	6150014422046	81834	05200970	WIRING HARNESS..... UOC:JNH,	1
2	PAOZZ	6150012818824	19207	12354143	CABLE ASSEMBLY,SPEC..... UOC:MEE,	1
3	PAOZZ	5940001141300	96906	MS20659-105	TERMINAL,LUG PART OF P/N 05200970, 12360384-1, 12360384-2, 12360384-5, AND 12360384-6..... UOC:JNH,	10
4	PAOZZ	6150012809459	19207	12360384-1	LEAD,ELECTRICAL 117 INCHES LONG.... UOC:MEE,	1
4	PAOZZ	6150012809460	19207	12360384-2	LEAD,ELECTRICAL 117 INCHES LONG.... UOC:MEE,	1
4	PAOZZ	6150014417827	19207	12360384-5	WIRING HARNESS 143 INCHES LONG..... UOC:JNH,	2
4	PAOZZ	6150014417933	19207	12360384-6	WIRING HARNESS 143 INCHES LONG..... UOC:JNH,	1

END OF FIGURE

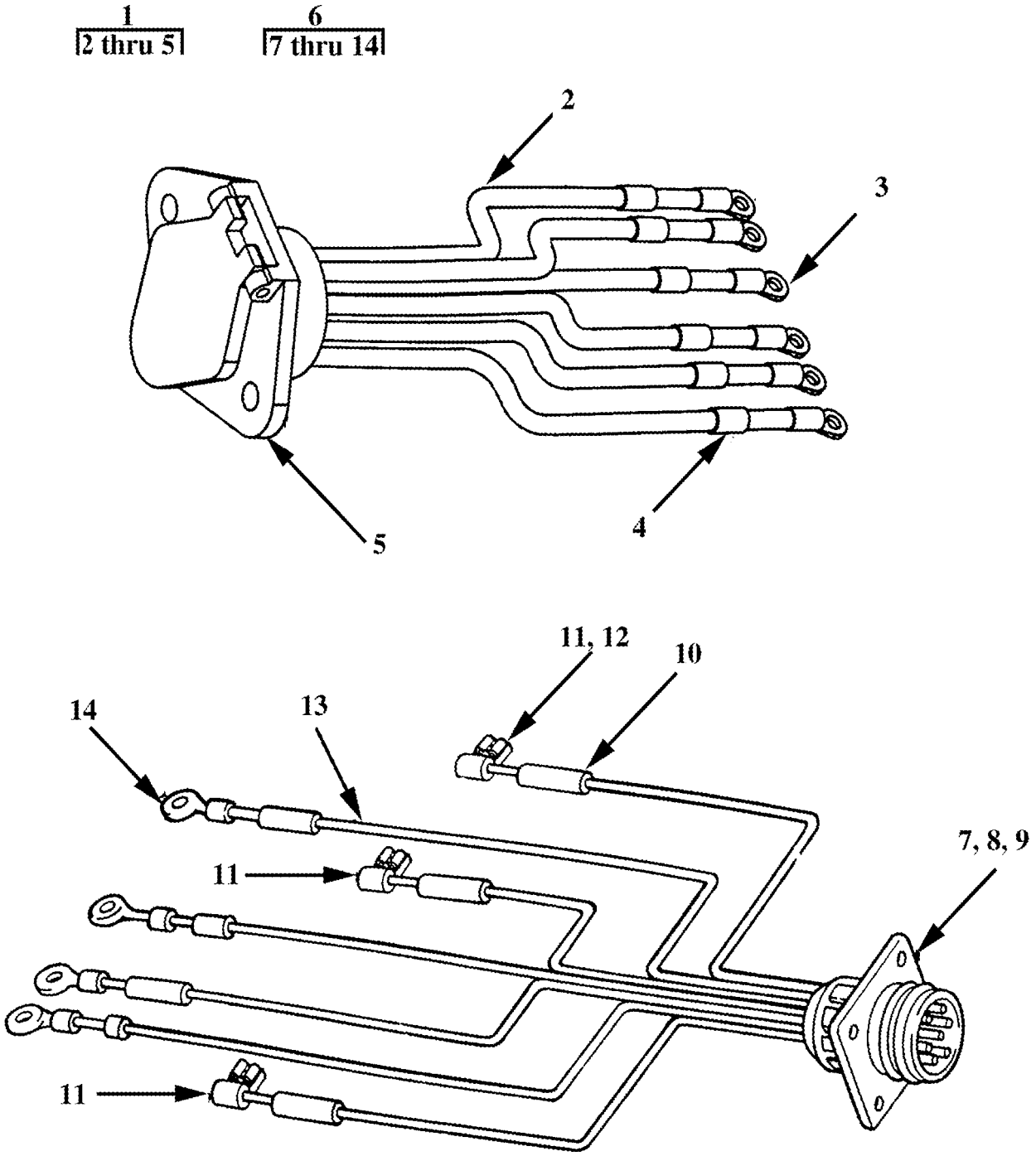

Figure 18. M129A4 Voltage Converter Wiring Harnesses

(1) ITEM NO	(2) SMR CODE	(3) NSN	(4) CAGEC	(5) PART NUMBER	(6) DESCRIPTION AND USABLE ON CODES(UOC)	(7) QTY
					GROUP 0613 HULL OR CHASSIS WIRING HARNESS FIG. 18 M129A4 VOLTAGE CONVERTER WIRING HARNESS	
1	PAOOO	6150014419349	19207	12315647	LEAD ASSEMBLY,ELECT PART OF P/N DT 338 AND 12360743-1..... UOC:JNH,	1
2	MOOZZ		19207	12315647-48	.WIRE,ELECTRICAL MAKE FROM WIRE, ELECTRICAL, P/N M13486-1-7, 48 INCHES LONG, 12 AWG..... UOC:JNH,	1
3	PAOZZ	5940005572343	96906	MS35436-11	.TERMINAL,LUG..... UOC:JNH,	6
4	PAOZZ	9905007524649	81349	M43436/1-1	.BAND,MARKER..... UOC:JNH,	6
5	PAOZZ	5935012114434	26697	JP0-0031	.CONNECTOR,RECEPTACL..... UOC:JNH,	1
6	PAOOO	6150014419347	19207	12315648	LEAD ASSEMBLY,ELECT PART OF P/N DT 338 AND 12360743-1..... UOC:JNH,	1
7	PAOZZ	5935008463883	96906	MS75021-1	.CONNECTOR,RECEPTACL..... UOC:JNH,	1
8	PAOZZ	5365000905426	19207	7722333	.BUSHING,NONMETALLIC..... UOC:JNH,	1
9	PAOZZ	5310003936685	19207	7723309	.NUT,PLAIN,KNURLED..... UOC:JNH,	1
10	PAOZZ	9905007524649	81349	M43436/1-1	.BAND,MARKER..... UOC:JNH,	12
11	PAOZZ	5940011473415	98410	B-175	.TERMINAL,QUICK DISC..... UOC:JNH,	3
12	MOOZZ		19207	12315648-1.5	.INSULATION SLEEVING MAKE FROM INSULATION, SLEEVING, P/N M23053/1-103-0, 1 1/2 INCHES LONG... UOC:JNH,	3
13	MOOZZ		19207	12315648-80	.WIRE,ELECTRICAL MAKE FROM WIRE, ELECTRICAL, P/N M13486-1-5, 14 AWG, 80 INCHES LONG..... UOC:JNH,	1
14	PAOZZ	5940005340991	96906	MS35436-6	.TERMINAL,LUG..... UOC:JNH,	4

END OF FIGURE

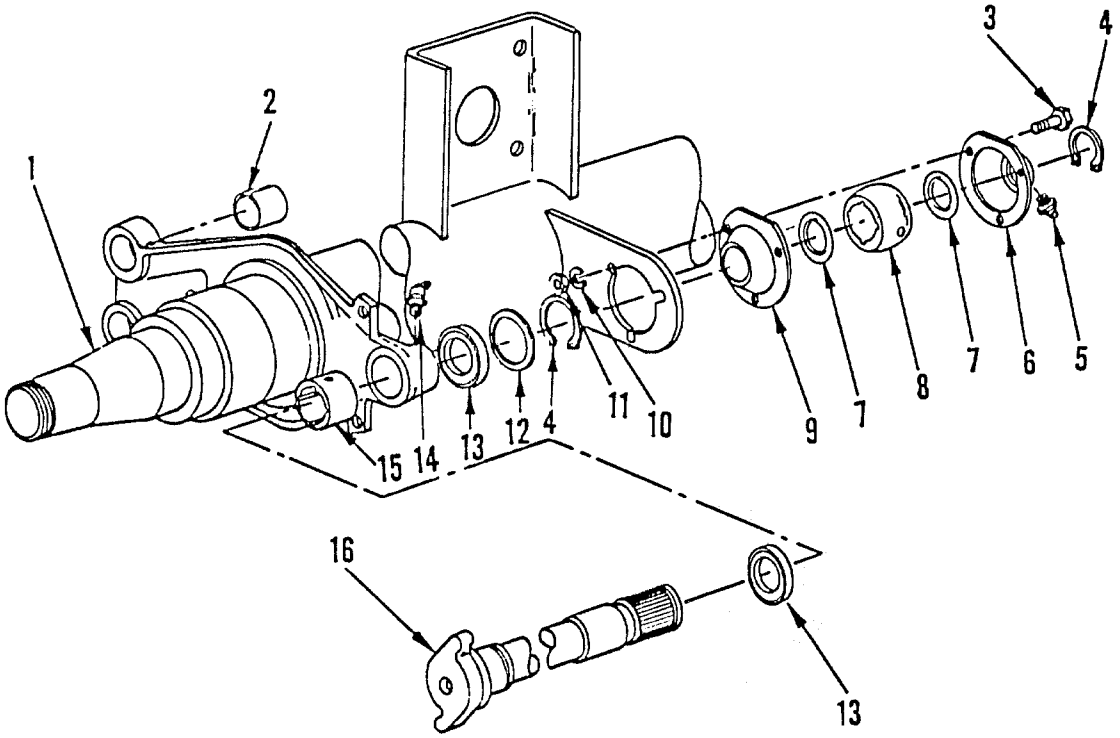

Figure 19. XM1063 Rear Axle Assembly

(1) ITEM NO	(2) SMR CODE	(3) NSN	(4) CAGEC	(5) PART NUMBER	(6) DESCRIPTION AND USABLE ON CODES(UOC)	(7) QTY
					GROUP 11 REAR AXLE GROUP 1100 REAR AXLE ASSEMBLY FIG. 19 XM1063 REAR AXLE ASSEMBLY	
1	PAFFF	2530012822575	19207	12354156-2	AXLE,VEHICULAR,NOND..... UOC:MEE,	2
2	PAOZZ	3120012817212	19207	12354160	.BUSHING,SLEEVE..... UOC:MEE,	8
3	PAOZZ	5306002258498	96906	MS90725-33	BOLT,MACHINE 5/16 DIA X 7/8 INCH LONG X 18 UNC..... UOC:MEE,	12
4	PAOZZ	5325008037299	79136	5100-150MD	RING,RETAINING..... UOC:MEE,	8
5	PAOZZ	4730000504203	96906	MS15001-1	FITTING,LUBRICATION..... UOC:MEE,	4
6	PAOZZ	3040012827003	19207	12354105-2	HOUSING,MECHANICAL..... UOC:MEE,	4
7	PAOZZ	5330011604343	81349	M83461/1-325	PACKING,PREFORMED..... UOC:MEE,	8
8	PAOZZ	3120012821582	19207	12354109	BEARING,PLAIN,SPHER..... UOC:MEE,	4
9	PAOZZ	3040012827002	19207	12354105-1	HOUSING,MECHANICAL..... UOC:MEE,	4
10	PAOZZ	5310004079566	96906	MS35338-45	WASHER,LOCK..... UOC:MEE,	12
11	PAOZZ	5310009843806	96906	MS51922-9	NUT,SELF-LOCKING,HE..... UOC:MEE,	12
12	PAOZZ	5310003505550	19207	7534868	.WASHER,FLAT..... UOC:MEE,	4
13	PAOZZ	5330012390885	62707	M16HH100	PACKING,PREFORMED..... UOC:MEE,	4
14	PAOZZ	4730001720028	96906	MS15003-4	.FITTING,LUBRICATION..... UOC:MEE,	4
15	PAOZZ	3120003049074	62707	M16HD100	.BUSHING,SLEEVE..... UOC:MEE,	4
16	PAOZZ	2530012828620	19207	12354103	.CAMSHAFT,ACTUATING, LEFT HAND..... UOC:MEE,	2
16	PAOZZ	2530012825191	19207	12354104	.CAMSHAFT,ACTUATING, RIGHT HAND.... UOC:MEE,	2

END OF FIGURE

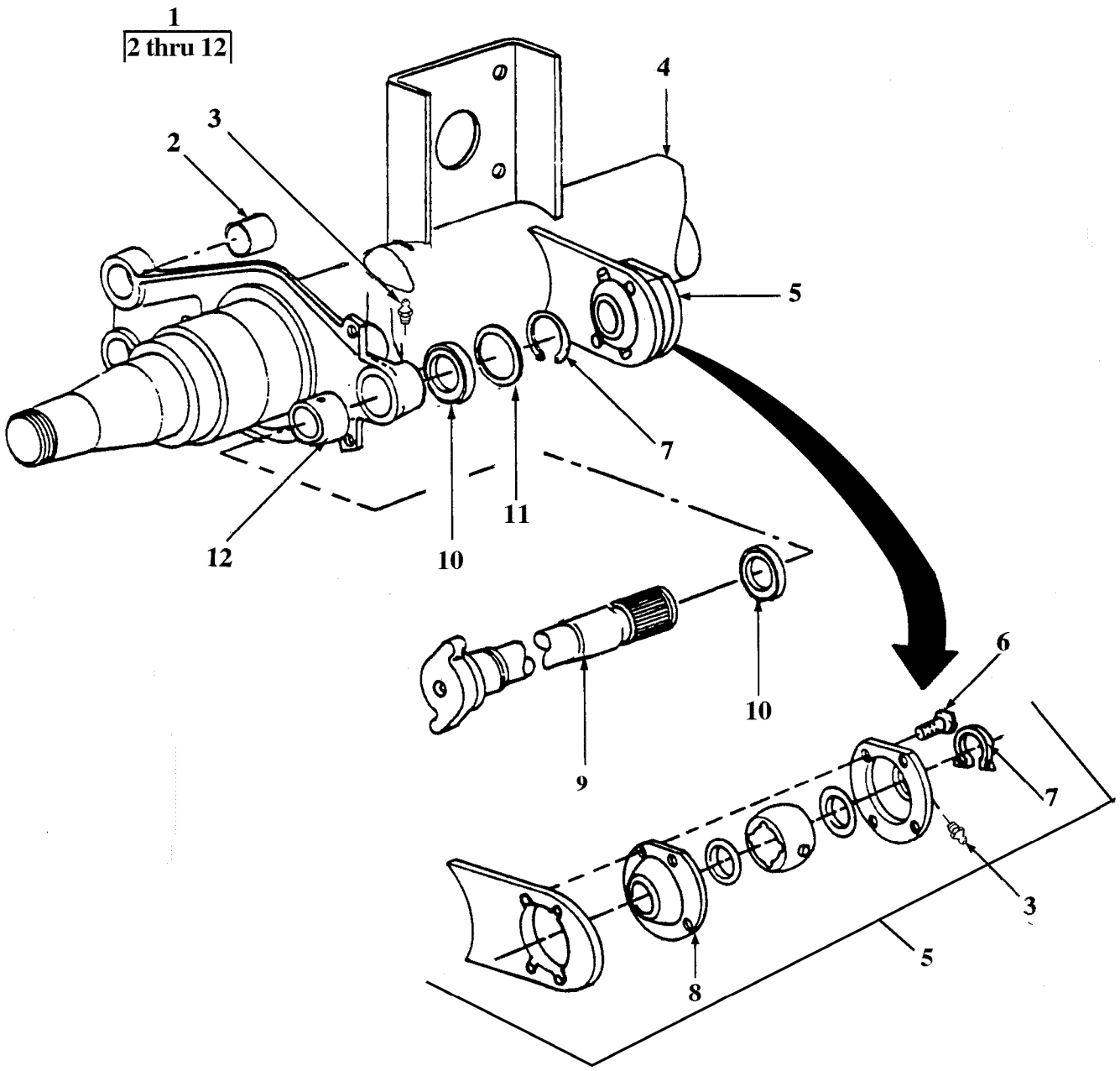

Figure 20. M129A4 Rear Axle Assembly

(1) ITEM NO	(2) SMR CODE	(3) NSN	(4) CAGEC	(5) PART NUMBER	(6) DESCRIPTION AND USABLE ON CODES(UOC)	(7) QTY
					GROUP 1100 REAR AXLE ASSEMBLY FIG. 20 M129A4 REAR AXLE ASSEMBLY	
1	PFFFF		19207	12354154-1	AXLE ASSEMBLY..... UOC:JNH,	2
2	PAOZZ	3120012817212	19207	12354160	.BUSHING,SLEEVE..... UOC:JNH,	4
3	PAOZZ	4730001720028	96906	MS15003-4	.FITTING,LUBRICATION..... UOC:JNH,	4
4	PBFFF	2530014416782	19207	12354156-1	.AXLE,VEHICULAR,NOND..... UOC:JNH,	1
5	XAFFF		19207	12377966-1	..BRACKET ASSY..... UOC:JNH,	1
5	XAFFF		19207	12377966-2	..BRACKET ASSY..... UOC:JNH,	1
6	PAFZZ	5305014438436	19207	12377969-1	...SCREW,TAPPING 5/16 DIA X 1/2 INCH LONG X 18 UNC..... UOC:JNH,	4
6	PAFZZ	5305014438437	19207	12377969-2	...SCREW,TAPPING..... UOC:JNH,	4
7	PAOZZ	5325002820748	31435	10313-23	.RING,RETAINING..... UOC:JNH,	4
8	PFFZZ	5340014413834	19207	12377968	...COVER,ACCESS..... UOC:JNH,	2
9	PAOZZ	2530012825191	97271	12354104	.CAMSHAFT,ACTUATING, RIGHT HAND.... UOC:JNH,	2
9	PAOZZ	2530012828620	3Z946	M16WK105-26	.CAMSHAFT,ACTUATING, LEFT HAND..... UOC:JNH,	2
10	PAOZZ	5330010673440	62707	M10HH129	.SEAL,PLAIN ENCASED..... UOC:JNH,	4
11	PAOZZ	5310003505550	19207	7534868	.WASHER,FLAT..... UOC:JNH,	4
12	PAOZZ	3120003049074	62707	M16HD100	.BUSHING,SLEEVE..... UOC:JNH,	2

END OF FIGURE

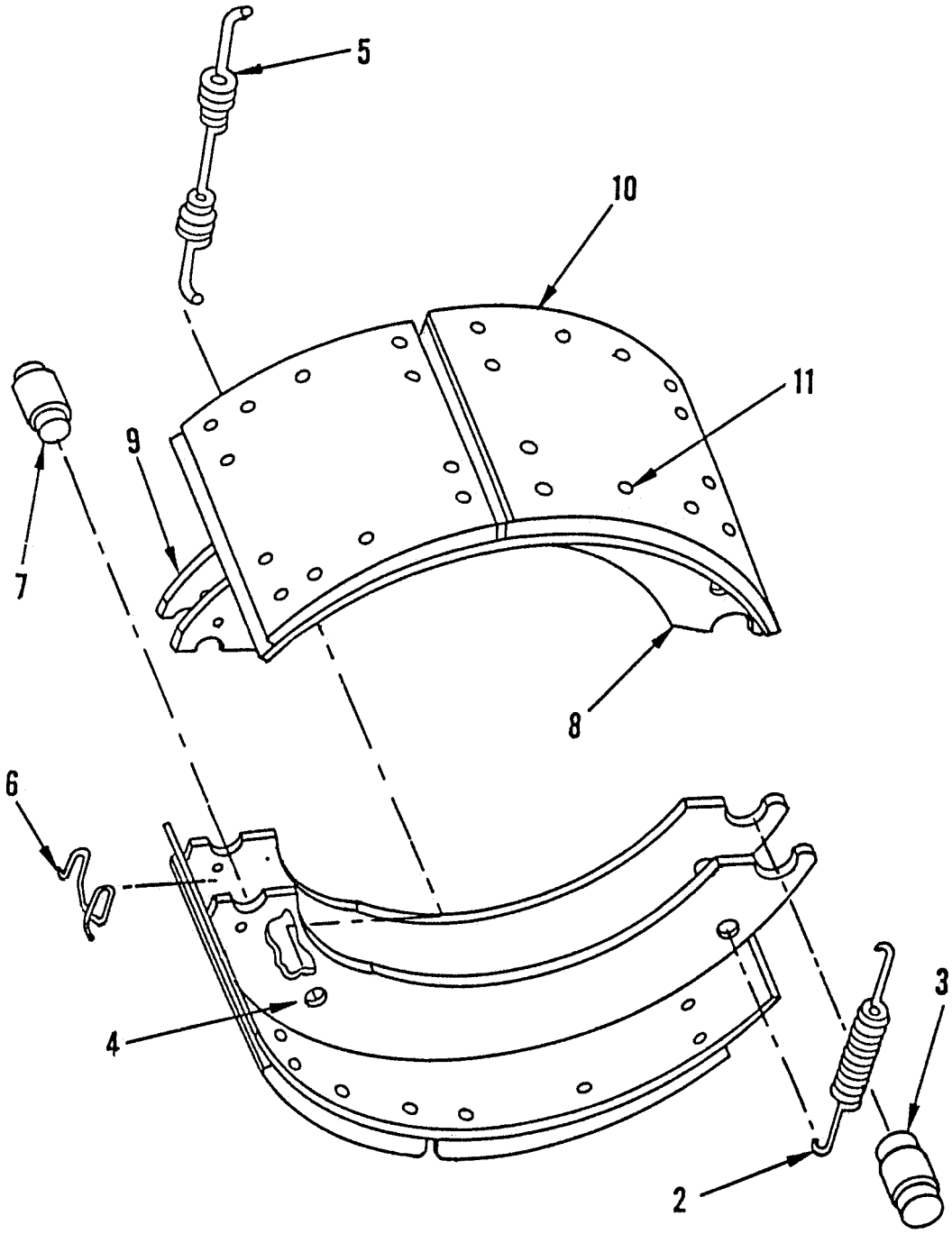

Figure 21. Brake Assembly

(1) ITEM NO	(2) SMR CODE	(3) NSN	(4) CAGEC	(5) PART NUMBER	(6) DESCRIPTION AND USABLE ON CODES(UOC)	(7) QTY
					GROUP 12 BRAKES	
					GROUP 1202 SERVICE BRAKES	
					FIG. 21 BRAKE ASSEMBLY	
1	PAOZZ	2530012825188	19207	12354163	BRAKE,SHOE TYPE.....	4
2	PAOZZ	5360012834341	19207	12354152	.SPRING,HELICAL,EXTE.....	4
3	PAOZZ	5315012828268	19207	12354165	.PIN,SHOULDER,HEADLE.....	8
4	PAOZZ	5340012390883	62707	M16WJ102	.CLIP,RETAINING.....	8
5	PAOZZ	5360012416961	62707	M16WJ100	.SPRING,HELICAL,EXTE.....	8
6	PAOZZ	5360012209373	62707	M16WJ103	.SPRING,HELICAL,TORS.....	8
7	PAOZZ	5315012206245	62707	M16WJ104	.PIN,SHOULDER,HEADLE.....	8
8	PFOFF	2530012888553	19207	12354166	.BRAKE SHOE.....	1
9	XAFZZ		19207	12354167	..BRAKE SHOE.....	8
10	PAFZZ	2430011738546	62707	M16WL100	..LINING,FRICTION.....	8
11	PAFZZ	5320012390880	62707	M10HM100	..RIVET,TUBULAR.....	24

END OF FIGURE

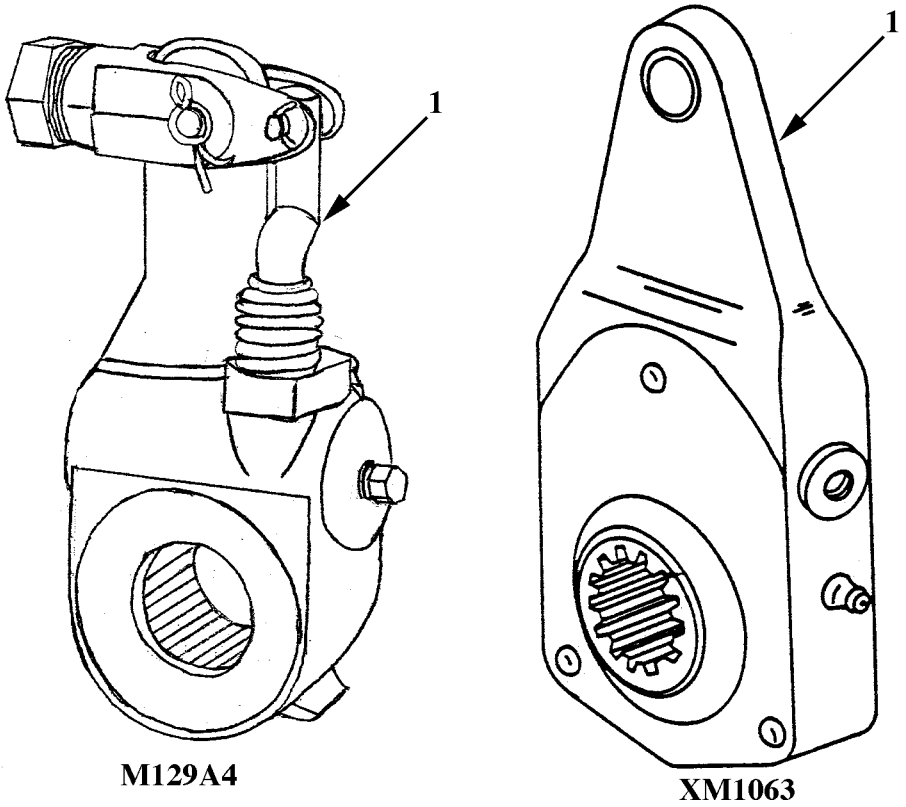

Figure 22. Slack Adjuster

(1) ITEM NO	(2) SMR CODE	(3) NSN	(4) CAGEC	(5) PART NUMBER	(6) DESCRIPTION AND USABLE ON CODES(UOC)	(7) QTY
					GROUP 1202 BRAKES FIG. 22 SLACK ADJUSTER	
1	PAOZZ	2530014417210	06853	065175	ADJUSTER,SLACK,BRAK..... UOC:JNH,	4
1	PAOZZ	2350012825192	19207	12354150	ADJUSTER,SLACK,BRAK..... UOC:MEE,	4
2	PAOZZ	4730000504203	96906	MS15001-1	FITTING,LUBRICATION PART OF P/N 065175 AND 12354150.....	1

END OF FIGURE

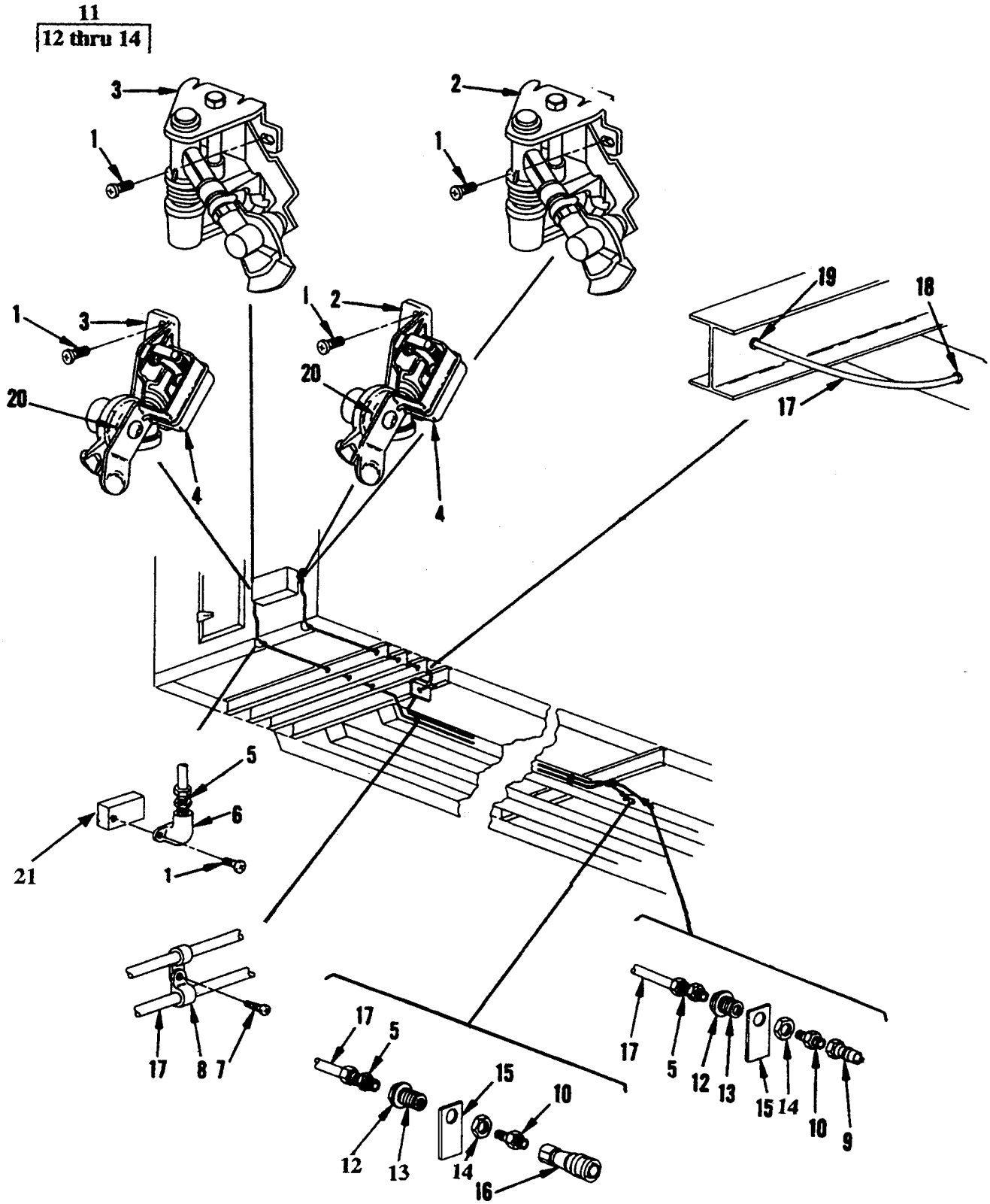

Figure 23. Piping, Air Brake, Van Body

(1) ITEM NO	(2) SMR CODE	(3) NSN	(4) CAGEC	(5) PART NUMBER	(6) DESCRIPTION AND USABLE ON CODES(UOC)	(7) QTY
					GROUP 1208 AIR BRAKE SYSTEM FIG. 23 PIPING, AIR BRAKE, VAN BODY	
1	PAOZZ	5305000527492	96906	MS24629-61	SCREW,TAPPING.....	8
2	PAOZZ	4730011380907	19207	12315278	GLADHAND,EMERGENCY..... UOC:MEE,	1
2	PAOZZ	4730014498032	0N972	441069	COUPLING,EMERGENCY..... UOC:JNH,	1
3	PAOZZ	4730011419268	19207	12315280	GLADHAND,SERVICE..... UOC:MEE,	1
3	PAOZZ		0N972	441070	GLADHAND,SERVICE..... UOC:JNH,	1
4	PAOZZ	2590011408208	19207	12315536	COVER,GLADHAND.....	2
5	PAOZZ	4730010969128	93061	68NTA-6-6	ADAPTER,STRAIGHT,PI..... UOC:MEE,	6
5	PAOZZ	4730010969128	93061	68NTA-6-6	ADAPTER,STRAIGHT,PI..... UOC:JNH,	8
6	PAOZZ	4730012819372	40670	12353895	ELBOW,FLANGE TO PIP.....	2
7	PAOZZ	5305008550958	96906	MS24629-45	SCREW,TAPPING.....	10
8	PAOZZ	5340007647051	96906	MS21333-69	CLAMP,LOOP.....	20
9	PAOZZ	4730007297087	73992	2K16	COUPLING HALF,QUICK.....	1
10	PAOZZ	4730008784199	21450	443990	REDUCER,PIPE.....	2
11	PAOZZ	4730012818042	19207	12354138	ADAPTER BUSHING MATCHED SET.....	2
12	XAOZZ		19207	12354138-2	ADAPTER BUSHING PART OF P/N 12354138.....	2
13	PAOZZ	5310005826714	96906	MS35333-49	WASHER,LOCK PART OF P/N 12354138...	2
14	PAOZZ	5310002410157	19207	5331179	NUT,PLAIN,HEXAGON PART OF P/N 12354138, 1 DIA X 14 UNS.....	2
15	PFOZZ	5365012821561	19207	12360359	SPACER,PLATE.....	2
16	PAOZZ	4730011841683	73992	2-H16	COUPLING HALF,QUICK.....	1
17	MOOZZ		19207	12368757-660	HOSE,NONMETALLIC MAKE FROM HOSE, NONMETALLIC, P/N J844TYBSIZE 3/8 BLACK, 660 INCHES LONG..... UOC:JNH,	1
17	MOOZZ		19207	CPR104420-2-55	HOSE,NONMETALLIC MAKE FROM HOSE, NONMETALLIC, P/N 246115, LENGTH AS REQUIRED..... UOC:MEE,	1
18	PAOZZ	5325002766040	96906	MS35489-98	GROMMET,NONMETALLIC..... UOC:MEE,	1
19	PAOZZ	5325001850004	96906	MS35489-40	GROMMET,NONMETALLIC..... UOC:MEE,	6
19	PAOZZ	5325001850004	96906	MS35489-40	GROMMET,NONMETALLIC..... UOC:JNH,	12
20	PAOZZ	5330000902128	96906	MS35748-1	PACKING,PREFORMED PART OF P/N 12315278 AND 12315280.....	1
21	MFFZZ		19207	12368757-1	SPACER,GLADHAND SEE APPENDIX G..... UOC:JNH,	2

END OF FIGURE

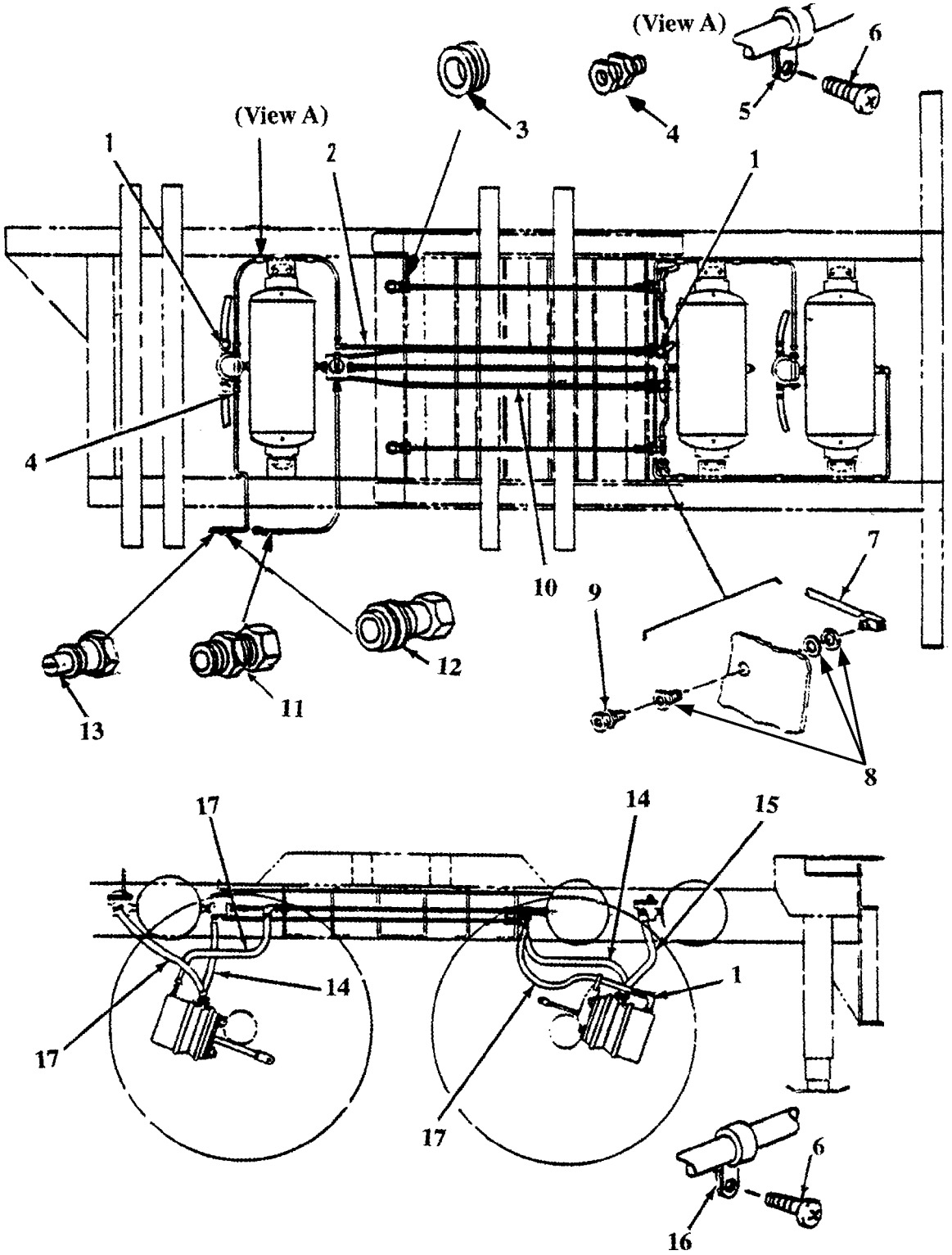

Figure 24. Piping, Air Brake, Dolly

(1) ITEM NO	(2) SMR CODE	(3) NSN	(4) CAGEC	(5) PART NUMBER	(6) DESCRIPTION AND USABLE ON CODES(UOC)	(7) QTY
					GROUP 1208 AIR BRAKE SYSTEM FIG. 24 PIPING, AIR BRAKE, DOLLY	
1	PAOZZ	4730002534413	96906	MS39230-3	ELBOW,PIPE.....	12
2	MOOZZ		19207	12354023-300	HOSE,NONMETALLIC MAKE FROM HOSE, NONMETALLIC, P/N 246115, 300 INCHES LONG..... UOC:JNH,	1
2	MOOZZ		19207	CPR104420-2-25	HOSE,NONMETALLIC MAKE FROM HOSE, NONMETALLIC, P/N 246115, LENGTH AS REQUIRED..... UOC:MEE,	V
3	PAOZZ	5325002766098	96906	MS35489-78	GROMMET,NONMETALLIC..... UOC:MEE,	32
4	PAOZZ	4730010969128	93061	68NTA-6-6	ADAPTER,STRAIGHT,PI..... UOC:MEE	11
4	PAOZZ	4730010969128	93061	68NTA-6-6	ADAPTER,STRAIGHT,PI..... UOC:JNH,	2
5	PAOZZ	5340007647051	96906	MS21333-69	CLAMP,LOOP.....	9
6	PAOZZ	5305008550958	96906	MS24629-45	SCREW,TAPPING 3/8 X PAN, 3/16 X 3/8 DIA..... UOC:MEE,	11
6	PAOZZ	5305008550958	96906	MS24629-45	SCREW,TAPPING 3/8 X PAN, 3/16 X 3/8 DIA..... UOC:JNH,	9
7	PAOZZ	4730005649527	81343	6-6-6140425C	TEE,PIPE..... UOC:MEE,	1
7	PAOZZ	4730005649527	81343	6-6-6140425C	TEE,PIPE..... UOC:JNH,	2
8	PAOZZ	4730012818042	19207	12354138	ADAPTER BUSHING..... UOC:MEE,	8
8	PAOZZ	4730012818042	19207	12354138	ADAPTER BUSHING..... UOC:JNH,	6
9	PAOZZ	4730010918032	93061	68NTA-8-6	ADAPTER,STRAIGHT,PI..... UOC:MEE,	3
9	PAOZZ	4730010918032	93061	68NTA-8-6	ADAPTER,STRAIGHT,PI..... UOC:JNH,	2
10	MOOZZ		19207	12354023-108	HOSE,NONMETALLIC MAKE FROM HOSE, NONMETALLIC, P/N C608-100BLK, 108 INCHES LONG..... UOC:JNH,	1
10	MOOZZ		19207	CPR104420-3-9	HOSE,NONMETALLIC MAKE FROM HOSE, NONMETALLIC, P/N C08-100BLK, LENGTH AS REQUIRED..... UOC:MEE,	1
11	PAOZZ	4730011841683	73992	2-H16	COUPLING HALF,QUICK.....	1
12	PAOZZ	4730012741830	81343	6-4100102BA	ADAPTER,STRAIGHT,PI.....	2
13	PAOZZ		73992	2K16	COUPLING HALF,QUICK.....	1
14	XDOZZ		19207	12354046-2	HOSE ASSEMBLY,NONME.....	2
15	XDOZZ		19207	12354046-3	HOSE ASSEMBLY,NONME.....	4

(1) ITEM NO	(2) SMR CODE	(3) NSN	(4) CAGEC	(5) PART NUMBER	(6) DESCRIPTION AND USABLE ON CODES(UOC)	(7) QTY
16	PAOZZ	5340000572906	96906	MS21333-73	CLAMP,LOOP..... UOC:MEE,	2
17	PAOZZ	4720014416746	19207	12354046-1	HOSE,PREFORMED 32 INCHES LONG..... UOC:JNH,	2
17	XDOZZ	4720014416746	19207	12354046-1	HOSE,PREFORMED 32 INCHES LONG..... UOC:MEE,	6

END OF FIGURE

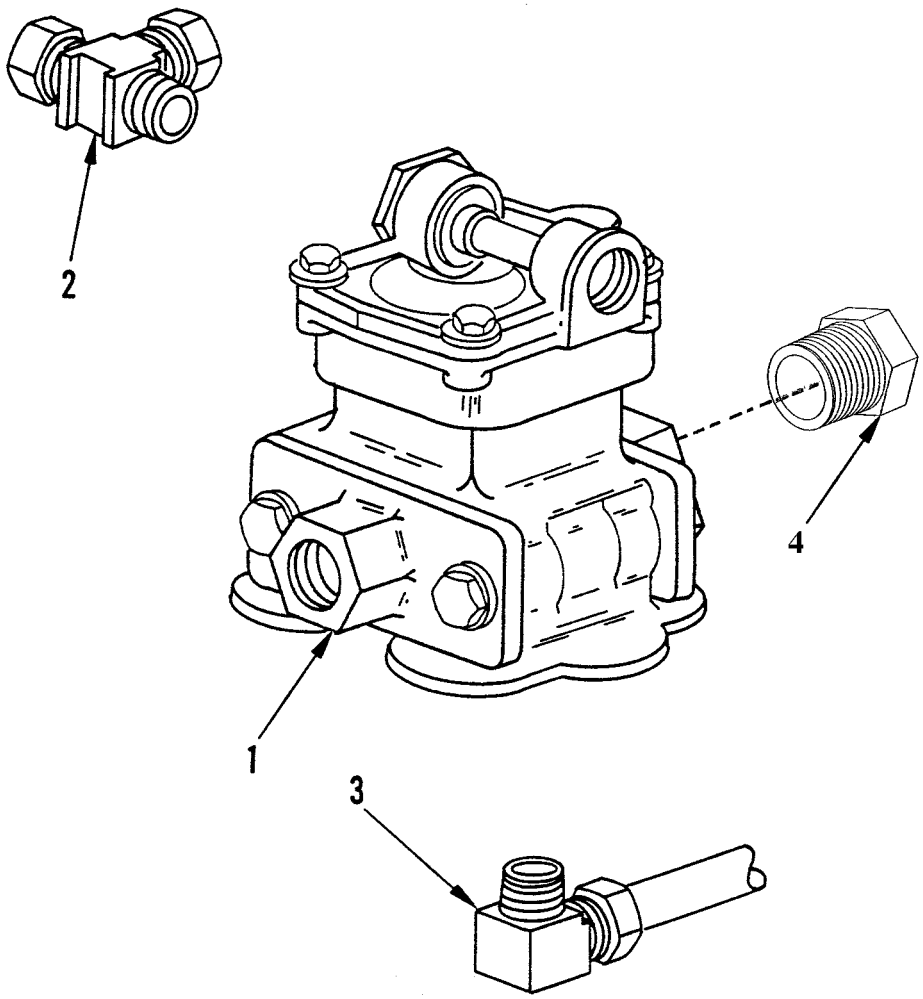

Figure 25. Ratio Relay Valve

(1) ITEM NO	(2) SMR CODE	(3) NSN	(4) CAGEC	(5) PART NUMBER	(6) DESCRIPTION AND USABLE ON CODES(UOC)	(7) QTY
					GROUP 1208 AIR BRAKE SYSTEM FIG. 25 RATIO RELAY VALVE	
1	PAOZZ	2530012531978	10125	110180X	VALVE,RELAY,AIR PRE.....	1
2	PAOZZ	4730012831876	19207	12354111	TEE,PIPE TO TUBE.....	1
3	PAOZZ	4730011156643	81343	8-8100202BA	ELBOW,PIPE TO TUBE.....	2
4	PAOZZ	4730002783912	40670	12360346	REDUCER,PIPE..... UOC:JNH,	1

END OF FIGURE

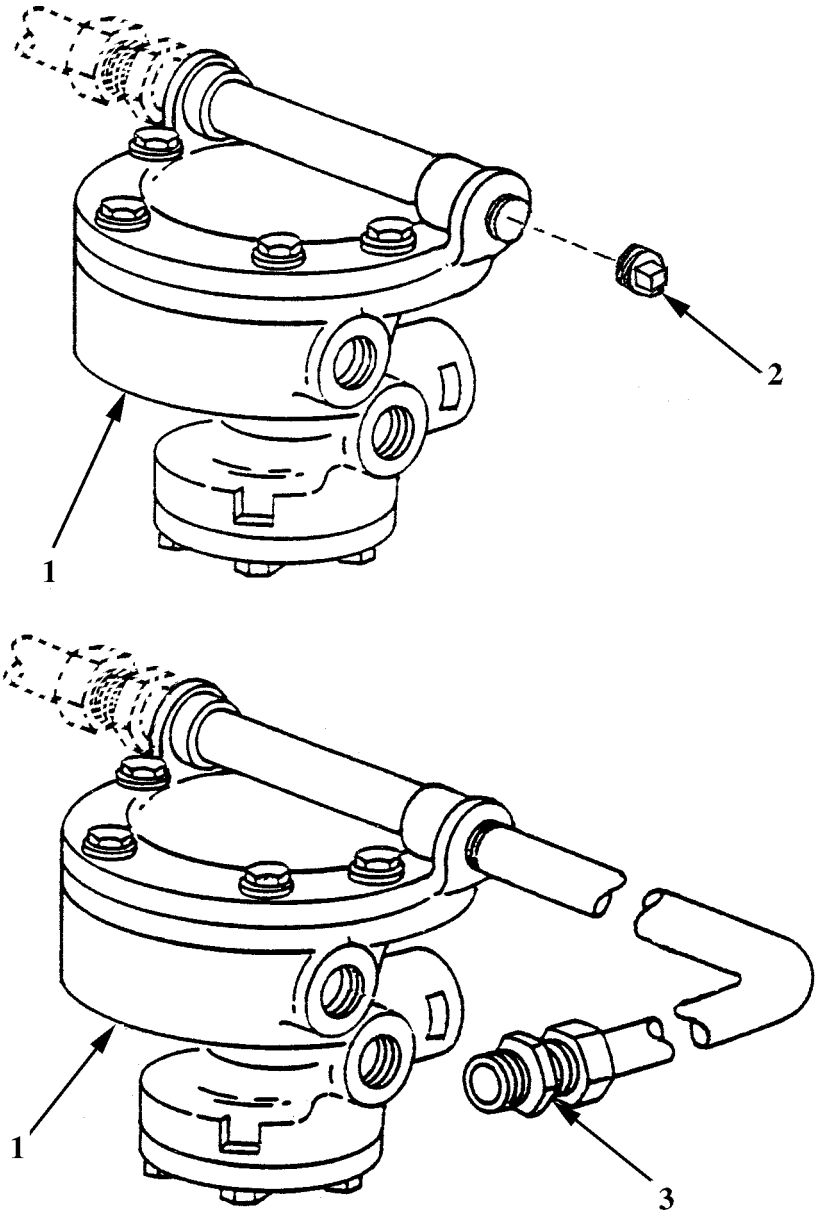

Figure 26. Relay Valve

(1) ITEM NO	(2) SMR CODE	(3) NSN	(4) CAGEC	(5) PART NUMBER	(6) DESCRIPTION AND USABLE ON CODES(UOC)	(7) QTY
					GROUP 1208 AIR BRAKE SYSTEM FIG. 26 RELAY VALVE	
1	PAOZZ	2530012830812	19207	12354140	VALVE,RELAY,AIR PRE.....	2
2	PAOZZ	4730001874202	81348	WW-P-471AASBCC	PLUG,PIPE.....	2
3	XBOZZ		19207	12354108-2	CONNECTOR,TUBING,ST..... UOC:MEE,	4

END OF FIGURE

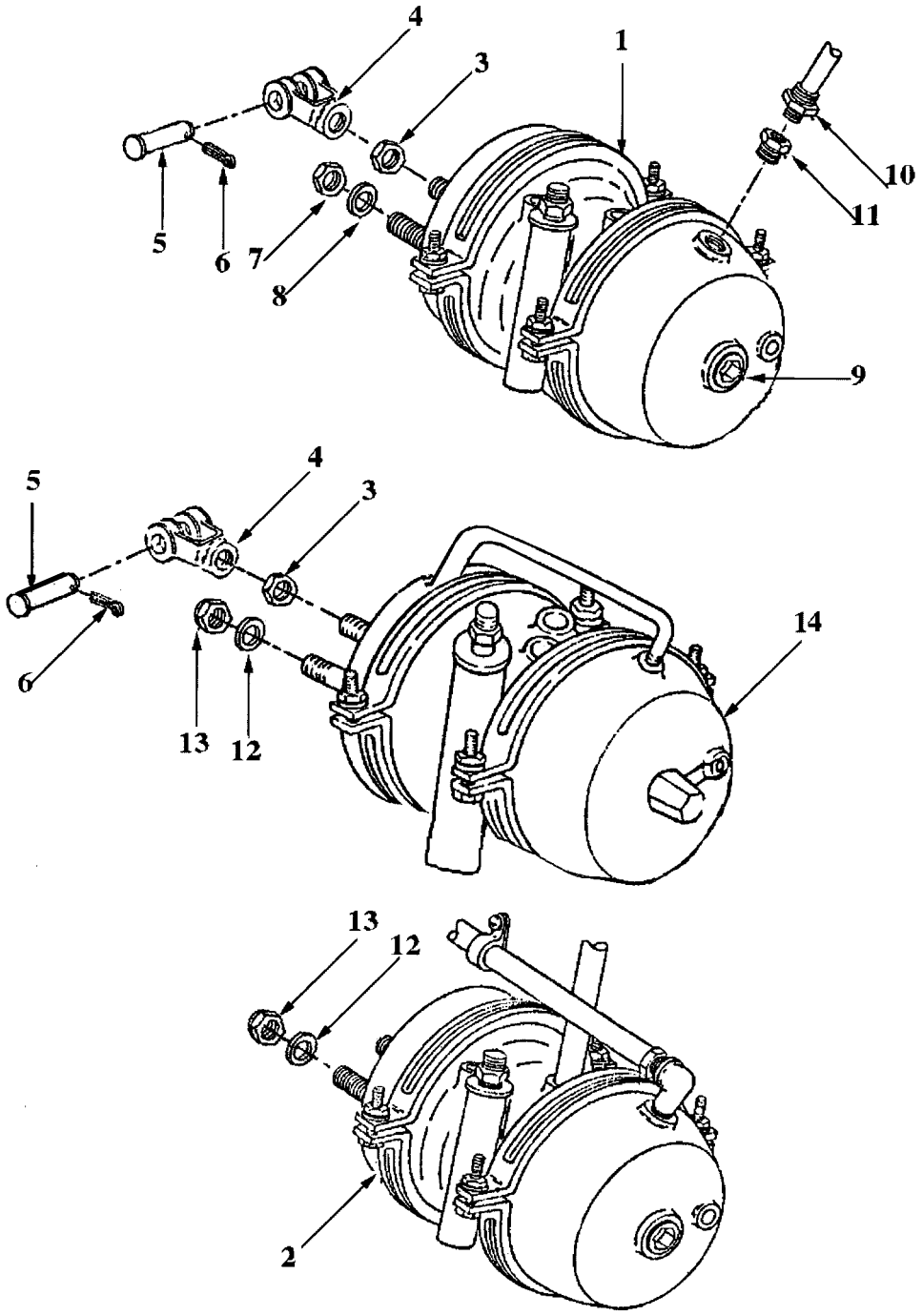

Figure 27. Brake Air Chamber

(1) ITEM NO	(2) SMR CODE	(3) NSN	(4) CAGEC	(5) PART NUMBER	(6) DESCRIPTION AND USABLE ON CODES(UOC)	(7) QTY
					GROUP 1208 AIR BRAKE SYSTEM FIG. 27 BRAKE AIR CHAMBERS	
1	PAOZZ	2530012825193	19207	12353997	CHAMBER,AIR BRAKE..... UOC:MEE,	2
2	PAOZZ	2530012825194	19207	12354007	CHAMBER,AIR BRAKE..... UOC:MEE,	2
3	PAOZZ	5310007638905	96906	MS51968-20	NUT,PLAIN,HEXAGON.....	4
4	PAOZZ	5340012823930	19207	12360344	CLEVIS,ROD END.....	4
5	PAOZZ	5315012858967	19207	12360345	PIN,STRAIGHT,HEADED.....	4
6	PAOZZ	5315002368359	96906	MS24665-370	PIN,COTTER.....	4
7	PAOZZ	5310002694040	96906	MS51922-49	NUT,SELF-LOCKING,HE..... UOC:MEE,	8
8	PAOZZ	5310008238803	96906	MS27183-21	WASHER,FLAT..... UOC:MEE,	8
9	PAOZZ	4730000103875	81348	WW-P-471ACBBUE	PLUG,PIPE.....	4
10	PAOZZ	4730012821706	19207	12360347	ADAPTER,STRAIGHT,TU..... UOC:MEE,	12
11	PFOZZ	4730002783912	81343	6-4 140140C	BUSHING,PIPE..... UOC:MEE,	12
12	PAOZZ	5310008206653	96906	MS35338-50	WASHER,LOCK.....	8
13	PAOZZ	5310010046946	96906	MS17828-10C	NUT,SELF-LOCKING,HE.....	8
14	PAOZZ	5340014413833	4B100	30/30 CHAMBER 34 31232	CHAMBER,AIR BRAKE..... UOC:JNH,	4

END OF FIGURE

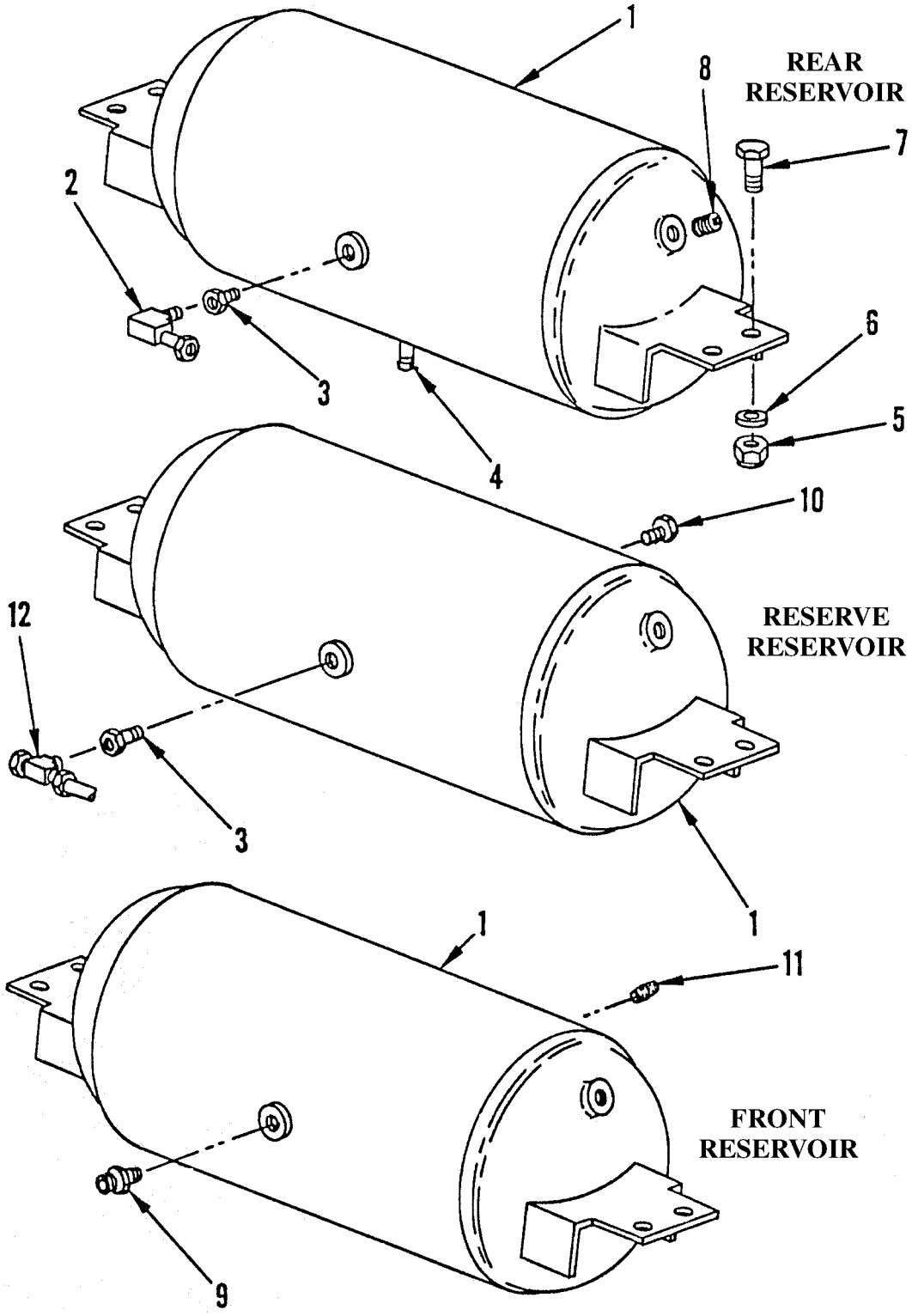

Figure 28. Air Reservoirs

(1) ITEM NO	(2) SMR CODE	(3) NSN	(4) CAGEC	(5) PART NUMBER	(6) DESCRIPTION AND USABLE ON CODES(UOC)	(7) QTY
					GROUP 1208 AIR BRAKE SYSTEM FIG. 28 AIR RESERVOIRS	
1	XDOZZ	2530012822559	19207	12354102	TANK,PRESSURE..... UOC:MEE,	3
1	XDOZZ	2530012822559	84290	D613-40004	TANK,PRESSURE..... UOC:JNH,	2
2	PFOZZ	4730012741825	81343	6-6 100202BA	ELBOW,PIPE TO TUBE.....	1
3	PAOZZ	4730008176578	96906	MS14315-4	BUSHING,PIPE.....	2
4	PAOZZ	4820008491220	96906	MS35782-5	COCK,DRAIN..... UOC:MEE,	3
4	PAOZZ	4820008491220	96906	MS35782-5	COCK,DRAIN..... UOC:JNH,	2
5	PAOZZ	5310000874652	96906	MS51922-17	NUT,SELF-LOCKING,HE 1/2 DIA HOLE, 13 UNC..... UOC:MEE,	12
5	PAOZZ	5310000874652	96906	MS51922-17	NUT,SELF-LOCKING,HE 1/2 DIA HOLE, 13 UNC..... UOC:JNH,	8
6	PAOZZ	5310000806004	96906	MS27183-14	WASHER,FLAT..... UOC:MEE,	12
6	PAOZZ	5310000806004	96906	MS27183-14	WASHER,FLAT..... UOC:JNH,	8
7	PAOZZ	5305002693211	96906	MS90725-60	SCREW,CAP,HEXAGON H 3/8 DIA X 1 INCH LONG X 16 UNC..... UOC:MEE,	12
7	PAOZZ	5305002693211	96906	MS90725-60	SCREW,CAP,HEXAGON H 3/8 DIA X 1 INCH LONG X 16 UNC..... UOC:JNH,	8
8	PAOZZ	4730000523666	89346	444624	PLUG,PIPE.....	6
9	XBOZZ		19207	12354132-2	REDUCER,PIPE.....	2
10	PAOZZ	4730006784749	79470	C3159X12	PLUG,PIPE USED ON RESERVE RESERVOIR..... UOC:MEE,	1
11	PAOZZ	4730001961504	19207	192075	NIPPLE,PIPE.....	1
12	PAOZZ	4730012831877	19207	12354107	TEE,PIPE TO TUBE..... UOC:MEE,	1

END OF FIGURE

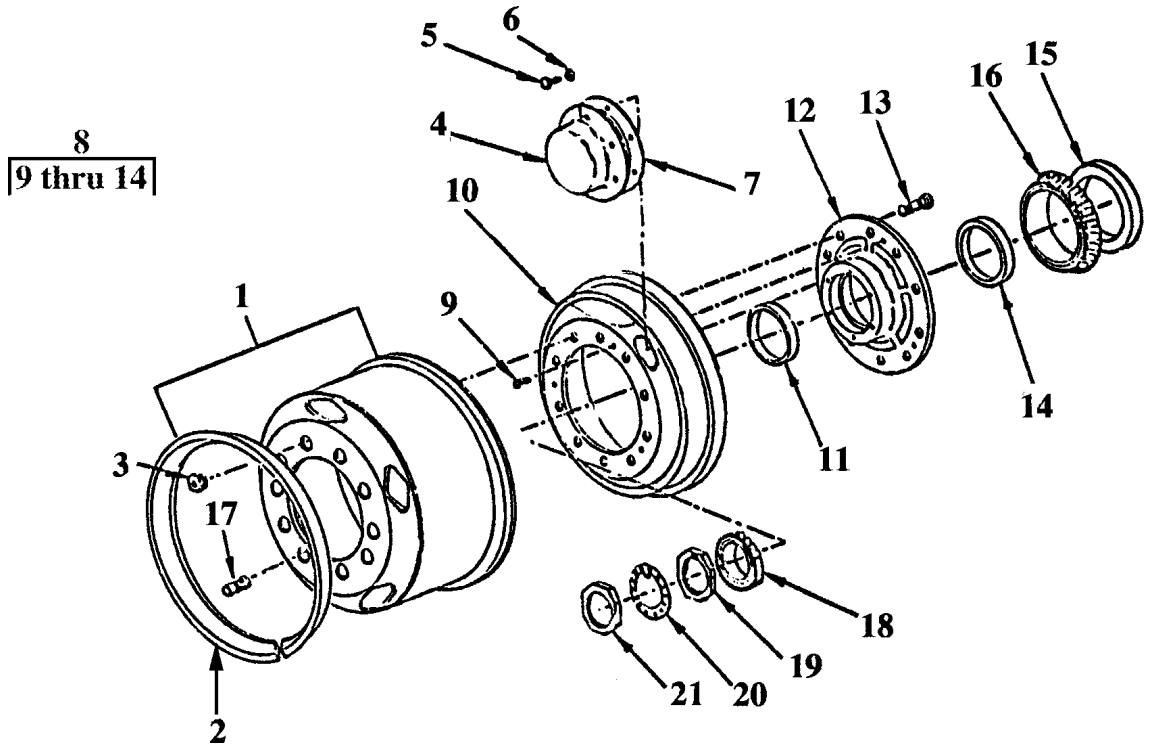

Figure 29. Wheel, Hub, and Drum Assembly (XM1063 Only)

(1) ITEM NO	(2) SMR CODE	(3) NSN	(4) CAGEC	(5) PART NUMBER	(6) DESCRIPTION AND USABLE ON CODES(UOC)	(7) QTY
					GROUP 13 WHEELS AND TRACKS GROUP 1311 WHEEL ASSEMBLY FIG. 29 WHEEL, HUB, AND DRUM ASSEMBLY (XM1063 ONLY)	
1	XDOZZ		19207	12354148	WHEEL,PNEUMATIC TIR..... UOC:MEE,	8
2	XAOZZ		19207	12360341	RING,LOCK,WHEEL PART OF P/N 12354148..... UOC:MEE,	8
3	PAOZZ	5310008802004	96906	MS51983-3	NUT,PLAIN,SINGLE BA LEFT HAND, USED ON OUTER WHEEL, 1 1/8 DIA HOLE, 16 UNC..... UOC:MEE,	20
3	PAOZZ	5310008802005	96906	MS51983-4	NUT,PLAIN,SINGLE BA RIGHT HAND, USED ON OUTER WHEEL, 1 1/8 DIA HOLE, 16 UNC..... UOC:MEE,	20
4	PAOZZ	2530011799307	19207	12354157	CAP,GREASE..... UOC:MEE,	4
5	PAOZZ	5306002264825	80204	B1821BH031C075N	BOLT,MACHINE..... UOC:MEE,	24
6	PAOZZ	5310004079566	96906	MS35338-45	WASHER,LOCK.....	24
7	PAOZZ	5330012831186	19207	12354158	GASKET..... UOC:MEE,	4
8	PAOZZ	2530012822576	19207	12354155-1	HUB & DRUM ASSEM RIGHT HAND..... UOC:MEE,	2
8	PAOZZ	2530012825208	19207	12354155-2	HUB & DRUM ASSEM LEFT HAND..... UOC:MEE,	2
9	PAOZZ	5305009585469	96906	MS35190-305	SCREW,MACHINE PART OF P/N 12354155-1 AND 12354155-2..... UOC:MEE,	12
10	PAOFF	2530012825190	19207	12360342	BRAKE DRUM PART OF P/N 12354155-1 AND 12354155-2..... UOC:MEE,	4
11	PAOZZ	3110002938997	60038	HM212011	CUP,TAPERED ROLLER OUTER RACE, PART OF P/N 12354155-1 AND 12354155-2..... UOC:MEE,	4
12	XDOZZ	2530012822525	19207	12360339	HUB,WHEEL,VEHICULAR PART OF P/N 12354155-1 AND 12354155-2..... UOC:MEE,	4
13	PAOZZ	5306012820427	19207	12354151-1	BOLT,RIBBED SHOULDE RIGHT HAND, PART OF P/N 12354155-1 AND 12354155 -2..... UOC:MEE,	40
13	PAOZZ	5306012817159	19207	12354151-2	BOLT,RIBBED SHOULDE LEFT HAND, PART OF P/N 12354155-1 AND 12354155 -2..... UOC:MEE,	40

(1) ITEM NO	(2) SMR CODE	(3) NSN	(4) CAGEC	(5) PART NUMBER	(6) DESCRIPTION AND USABLE ON CODES(UOC)	(7) QTY
14	PAOZZ	3110006180249	60038	HM218210	CUP,TAPERED ROLLER INNER RACE, PART OF P/N 12354155-1 AND 12354155-2..... UOC:MEE,	4
15	PAOZZ	5331012646130	2AA56	3TD100	O-RING..... UOC:MEE,	4
16	PAOZZ	3110006180248	60038	HM218248	CONE AND ROLLERS,TA..... UOC:MEE,	4
17	PAOZZ	2530006931029	52304	10709	NUT,CAP,DUAL WHEEL LEFT HAND, USED ON INNER WHEEL..... UOC:MEE,	20
17	PAOZZ	2530003591162	78500	1199J114C	NUT,CAP,DUAL WHEEL RIGHT HAND, USED ON INNER WHEEL..... UOC:MEE,	20
18	PAOZZ	3110002938998	60038	HM212049	CONE AND ROLLERS,TA..... UOC:MEE,	4
19	PAOZZ	5310010430596	62707	M10HN101	NUT,PLAIN,OCTAGON..... UOC:MEE,	4
20	PAOZZ	5365012852064	19207	12354113	WASHER,KEY..... UOC:MEE,	4
21	PAOZZ	5310012390893	62707	M10HN102	NUT,PLAIN,SLOTTED,O..... UOC:MEE,	4

END OF FIGURE

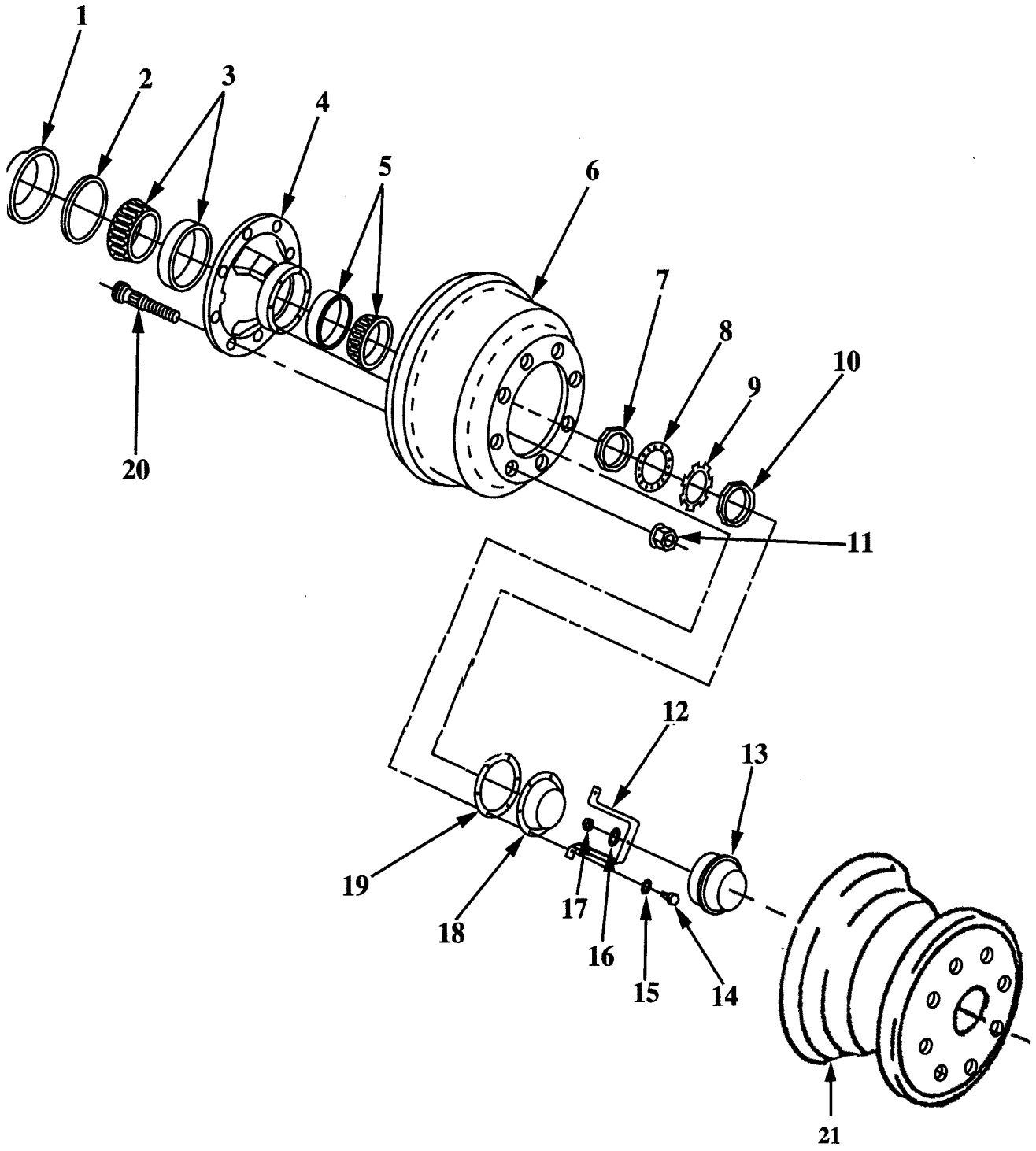

Figure 30. Wheel, Hub, and Drum Assembly (M129A4 Only)

(1) ITEM NO	(2) SMR CODE	(3) NSN	(4) CAGEC	(5) PART NUMBER	(6) DESCRIPTION AND USABLE ON CODES(UOC)	(7) QTY
					GROUP 1311 WHEEL ASSEMBLY FIG. 30 WHEEL, HUB, AND DRUM ASSEMBLY (M129A4 ONLY)	
1	PAOZZ	5330012550201	26151	315-1504	RETAINER,OIL SEAL GRAVEL GUARD..... UOC:JNH,	4
2	XDOZZ	5330012548290	26151	3202110	SEAL,PLAIN ENCASED GREASE..... UOC:JNH,	4
3	PAOZZ	3110006180248	60038	HM218248	CONE AND ROLLERS,TA..... UOC:JNH,	4
4	PAOZZ	2530014499474	18889	20231—0	HUB ASSEMBLY WITH BEARING CONES.... UOC:JNH,	4
5	PAOZZ	3110002938998	60038	HM212049	CONE AND ROLLERS,TA OUTER WHEEL BEARING..... UOC:JNH,	4
6	PAOZZ	2530014499475	18889	66884	DRUM,BRAKE..... UOC:JNH,	4
7	PAOZZ	5310010430596	62707	M10HN101	NUT,PLAIN,OCTAGON INNER..... UOC:JNH,	4
8	PAOZZ	5365012852064	19207	12354113	WASHER,KEY..... UOC:JNH,	4
9	PAOZZ	5310010499051	62707	M10HN151	WASHER TAB,LOCKING..... UOC:JNH,	4
10	PAOZZ	5310012390893	62707	M10HN102	NUT,PLAIN,SLOTTED,O..... UOC:JNH,	4
11	PAOZZ	5310014398921	63576	179955	NUT,PLAIN,HEXAGON 22MM WITH FLANGE, RIGHT HAND..... UOC:JNH,	40
12	PAOZZ	2590014500304	26151	610-0065	RETAINER,MOUNT HUBO..... UOC:JNH,	1
13	PAOZZ	6680014510112	26151	650-0620	HUBODOMETER..... UOC:JNH,	1
14	PAOZZ	5306002264825	80204	B1821BH031C075N	BOLT,MACHINE..... UOC:JNH,	40
15	PAOZZ	5310004079566	96906	MS35338-45	WASHER,LOCK..... UOC:JNH,	24
16	PAOZZ	5310005825965	96906	MS35338-44	WASHER,LOCK..... UOC:JNH,	1
17	PAOZZ	5310007616882	96906	MS51967-2	NUT,PLAIN,HEXAGON 1/4, 20 UNC..... UOC:JNH,	1
18	XDOZZ	2530011799307	19207	12354157	CAP,GREASE..... UOC:JNH,	4
19	PAOZZ	5330012831186	19207	12354158	GASKET..... UOC:JNH,	4
20	PAOZZ	5307014401364	63576	101162	STUD,PLAIN WHEEL MOUNTING, 22MM, RIGHT HAND..... UOC:JNH,	40
21	PAOZZ	2530014419700	73195	28408	WHEEL,PNEUMATIC TIR..... UOC:JNH,	8

END OF FIGURE

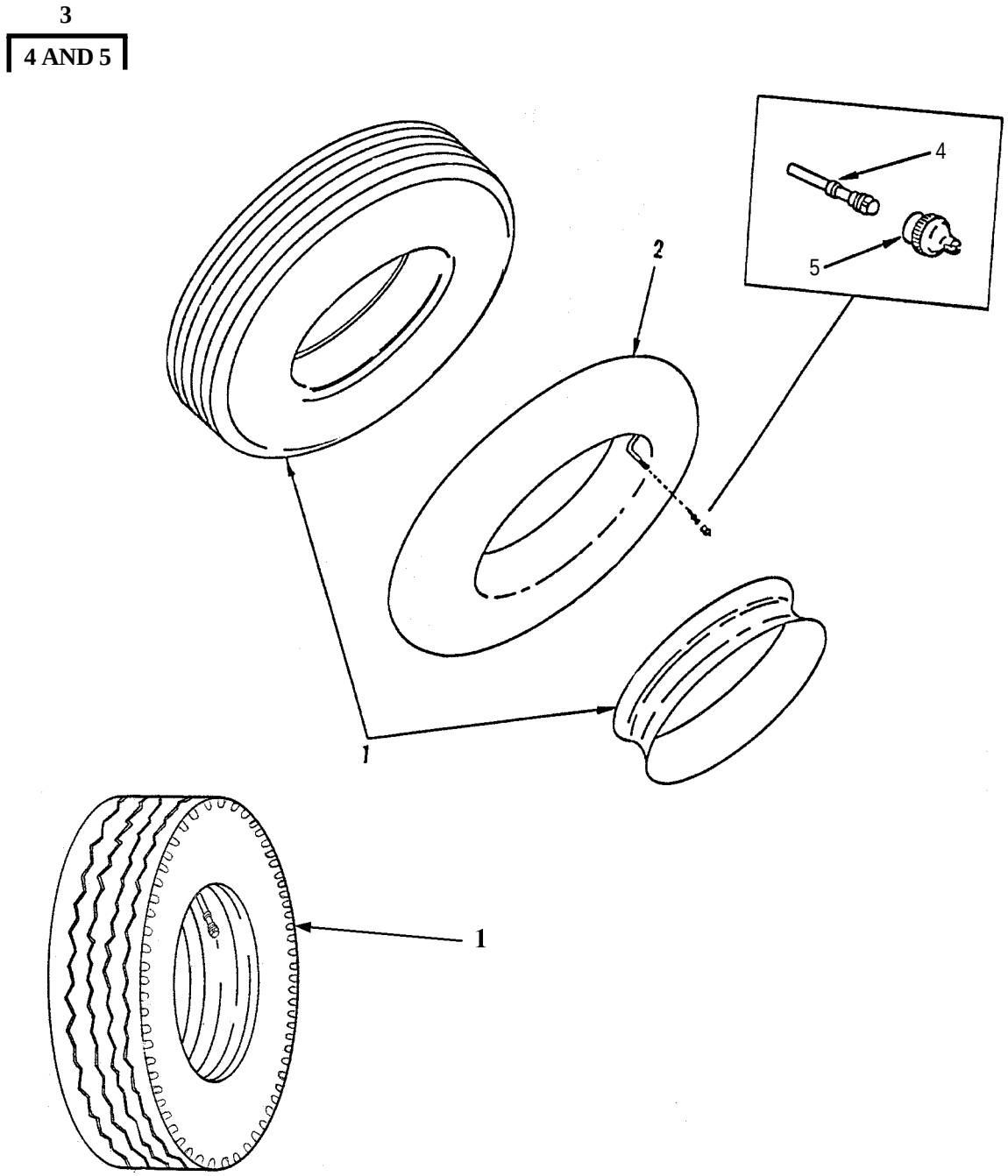

Figure 31. Tire and Tube

(1) ITEM NO	(2) SMR CODE	(3) NSN	(4) CAGEC	(5) PART NUMBER	(6) DESCRIPTION AND USABLE ON CODES(UOC)	(7) QTY
					GROUP 1313 TIRES, TUBES, TIRE CHAINS FIG. 31 TIRE AND TUBE	
1	PCOFH	2610002044026	81348	GP3STYLXTYBBCLR/ T/10.00-20/F/TBH	TIRE,PNEUMATIC,VEHI TUBE TYPE..... UOC:MEE,	8
1	PCOFH	2610010453688	81348	GP3STYLXTYRACLR/ T/11.00R22.50/G	TIRE,PNEUMATIC,VEHI TUBELESS..... UOC:JNH,	8
2	PAOZZ	2610002607345	81348	GROUP2/10.00-20/ TR444/TR464/ONCT	INNER TUBE,PNEUMATI..... UOC:MEE,	8
3	PAOZZ	2640005552824	27783	TR573	VALVE,PNEUMATIC TIR..... UOC:JNH,	8
4	PAOZZ	2640000520875	96906	MS51359-4	VALVE,PNEUMATIC TIR PART OF P/N TR573..... UOC:MEE,JNH	8
5	PAOZZ	2640000603550	81348	ZZ-V-25/TYPE IV/ CLASS1/TR-VC-2	CAP,PNEUMATIC VALVE PART OF P/N TR573..... UOC:MEE,JNH	8

END OF FIGURE

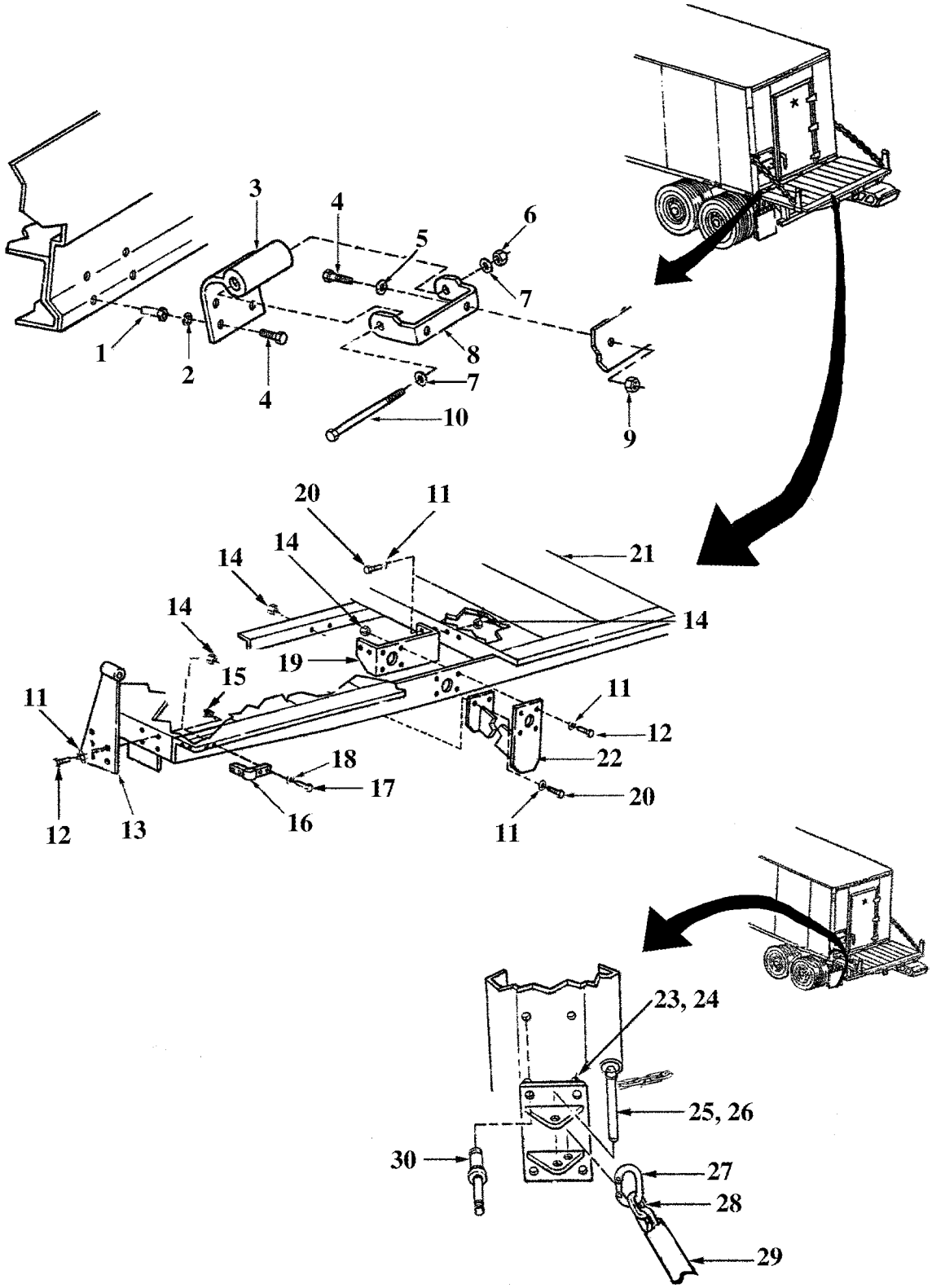

Figure 32. M129A4 Rear Platform and Attaching Hardware

(1) ITEM NO	(2) SMR CODE	(3) NSN	(4) CAGEC	(5) PART NUMBER	(6) DESCRIPTION AND USABLE ON CODES(UOC)	(7) QTY
					GROUP 15 FRAME, TOWING ATTACHMENTS, INCLUDES DRAWBARS, AND ARTICULATION SYSTEMS GROUP 1501 FRAME ASSEMBLY FIG. 32 M129A4 REAR PLATFORM AND ATTACHING HARDWARE	
1	PAOZZ	5310010389577	96906	MS27130-S47	NUT,PLAIN,BLIND RIV..... UOC:JNH,	12
2	PAOZZ	5310004079566	96906	MS35338-45	WASHER,LOCK..... UOC:JNH,	12
3	XDOZZ		19207	12360621	BRACKET,MOUNTING..... UOC:JNH,	3
4	PAOZZ	5306010758519	96906	MS90725-36	BOLT,MACHINE 5/16 DIA X 1 1/4 INCH LONG X 18 UNC..... UOC:JNH,	18
5	PAOZZ	5310000814219	96906	MS27183-12	WASHER,FLAT..... UOC:JNH,	6
6	PAOZZ	5310002256993	96906	MS51922-33	NUT,SELF-LOCKING,HE 1/2 DIA HOLE, 13 UNC..... UOC:JNH,	3
7	PAOZZ	5310008095998	96906	MS27183-18	WASHER,FLAT..... UOC:JNH,	6
8	PAOZZ	5342010876921	19207	11684622	HINGE,REAR PLATFORM..... UOC:JNH,	3
9	PAOZZ	5310009843806	96906	MS51922-9	NUT,SELF-LOCKING,HE 5/16 DIA HOLE, 18 UNC..... UOC:JNH,	6
10	PAOZZ	5305010322312	80204	B1821BH050C600N	SCREW,CAP,HEXAGON H 1/2 DIA X 5 1/2 INCH LONG X 13 UNC..... UOC:JNH,	3
11	PAOZZ	5310008094058	96906	MS27183-10	WASHER,FLAT..... UOC:JNH,	16
12	PAOZZ	5305000680509	80204	B1821BH025C125N	SCREW,CAP,HEXAGON H 1/4 DIA X 1 1/4 INCH LONG X 20 UNC..... UOC:JNH,	16
13	XDOZZ		19207	12360616	BRACKET,MOUNTING..... UOC:JNH,	2
14	PAOZZ	5310000881251	96906	MS51922-1	NUT,SELF-LOCKING,HE 1/4 DIA HOLE, 20 UNC..... UOC:JNH,	1
15	PAOZZ	5310009349758	96906	MS35649-202	NUT,PLAIN,HEXAGON 3/16 DIA HOLE, 24 UNC..... UOC:JNH,	8
16	PAOZZ	5340011456829	70485	307W	BUMPER,NONMETALLIC..... UOC:JNH,	2
17	PAOZZ	5305009844983	96906	MS35206-226	SCREW,MACHINE 1/8 DIA X 1/4 INCH LONG X 32 UNC..... UOC:JNH,	8
18	PAOZZ	5310000145850	96906	MS27183-42	WASHER,FLAT..... UOC:JNH,	8
19	PAOZZ	5340012866137	19207	12315541	BRACKET,DOUBLE ANGL.....	2

(1) ITEM NO	(2) SMR CODE	(3) NSN	(4) CAGEC	(5) PART NUMBER	(6) DESCRIPTION AND USABLE ON CODES(UOC)	(7) QTY
20	PAOZZ	5305002253843	80204	B1821BH025C100N	UOC:JNH, SCREW,CAP,HEXAGON H 1/4 DIA X 1 INCH LONG X 20 UNC.....	12
21	XDOZZ		19207	11684611	UOC:JNH, TAILGATE,VEHICLE BO.....	1
22	PAOZZ	5340011844815	19207	12307881	UOC:JNH, BRACKET,MOUNTING.....	2
23	PAOZZ	5340014413507	19207	12360612-1	UOC:JNH, BRACKET,MOUNTING RIGHT HAND.....	1
24	PAOZZ	5340014413846	19207	12360612-2	UOC:JNH, BRACKET,MOUNTING LEFT HAND.....	1
25	PAOZZ	5315012817906	50620	12315611-5	UOC:JNH, PIN,TOGGLE,EYE COLL.....	2
26	PAOZZ	5305004324172	39428	990053A197	UOC:JNH, SCREW,TAPPING 5/32 DIA X PAN, 3/4 INCH LONG.....	2
27	PAOZZ	4010001910091	96906	MS87008-1	UOC:JNH, LINK,CHAIN,CONNECTI.....	4
28	MOOZZ		19207	12353858-2	UOC:JNH, CHAIN,WELDLESS MAKE FROM CHAIN, WELDLESS, P/N 2109976, 60 INCHES LONG.....	2
29	MOOZZ		19207	12360611-60	UOC:JNH, INSULATION SLEEVING MAKE FROM INSULATION SLEEVING, P/N M23053/1-207-0, 60 INCHES LONG.....	2
30	PAOZZ	5320014458100	19207	12331109-6	UOC:JNH, RIVET,BLIND.....	8

END OF FIGURE

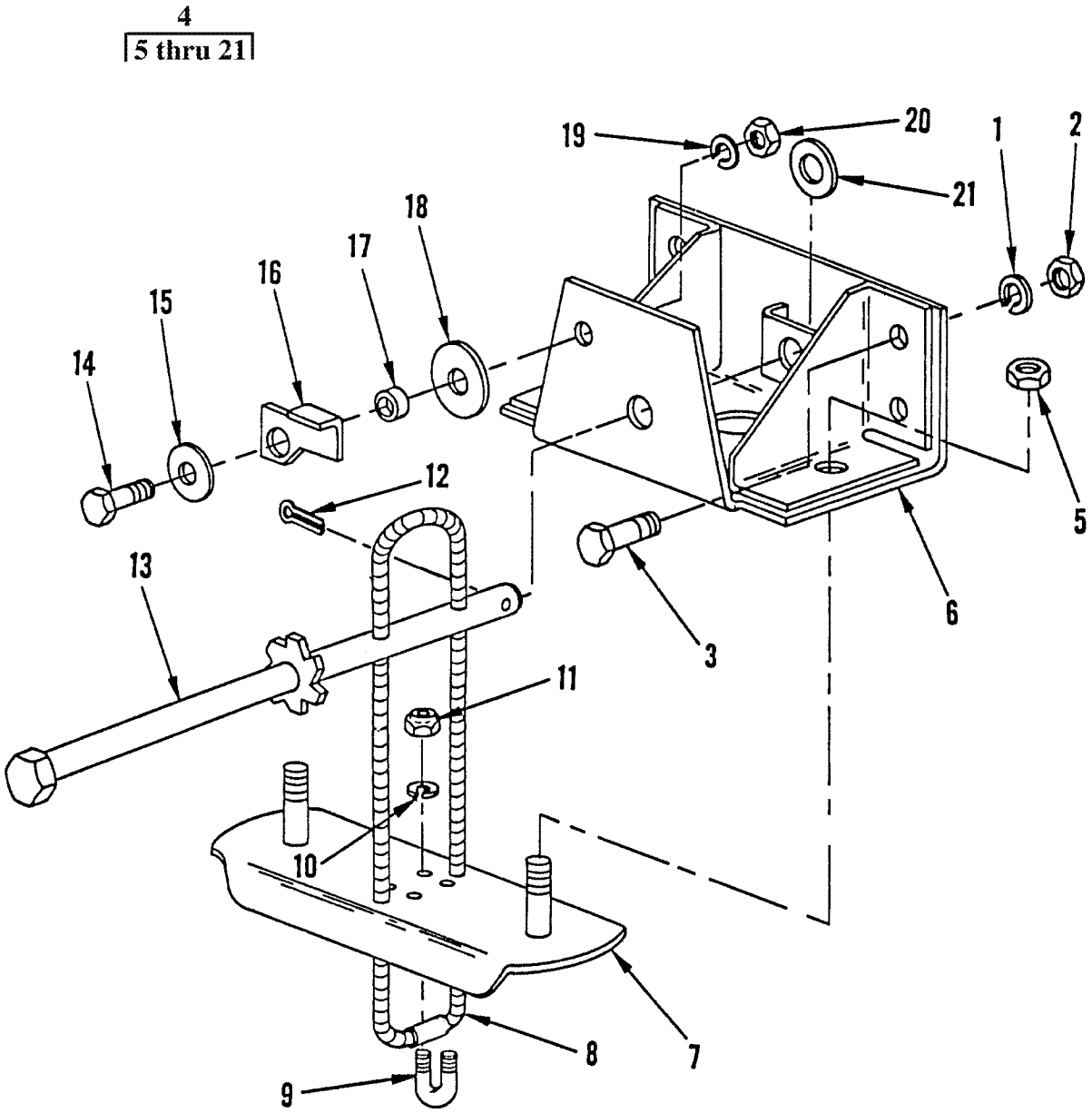

Figure 33. Spare Wheel Carrier (XM1063 Only)

(1) ITEM NO	(2) SMR CODE	(3) NSN	(4) CAGEC	(5) PART NUMBER	(6) DESCRIPTION AND USABLE ON CODES(UOC)	(7) QTY
					GROUP 1504 SPARE WHEEL CARRIER AND TIRE LOCK FIG. 33 SPARE WHEEL CARRIER (XM1063 ONLY)	
1	PAOZZ	5310005845272	80045	23MS35338-10	WASHER,LOCK..... UOC:MEE,	4
2	PAOZZ	5310007320560	96906	MS51968-14	NUT,PLAIN,HEXAGON 1/2 DIA HOLE, 20 UNF..... UOC:MEE,	4
3	PAOZZ	5305007195275	96906	MS90727-128	SCREW,CAP,HEXAGON H 1/2 DIA X 5 1/2 INCHES LONG X 20 UNF..... UOC:MEE,	8
4	PAOZZ	2590012842163	19207	12354173	BRACKET,VEHICULAR C..... UOC:MEE,	1
5	PAOZZ	5310005948038	81795	21008B	NUT,PLAIN,SINGLE BA PART OF P/N 12354173, 3/4 DIA HOLE, 16 UNF..... UOC:MEE,	2
6	PAOZZ	2510012828570	19207	12354182	FRAME SECTION,STRUC PART OF P/N 12354173..... UOC:MEE,	1
7	PAOZZ	5340012974096	19207	12354183	BRACKET,MOUNTING PART OF P/N 12354173..... UOC:MEE,	1
8	PAOZZ	4010010745029	19207	7521159	ROPE,WIRE PART OF P/N 12354173..... UOC:MEE,	1
9	PAOZZ	5306000179722	19207	8713419	BOLT,U PART OF P/N 12354173..... UOC:MEE,	2
10	PAOZZ	5310005825965	96906	MS35338-44	WASHER,LOCK PART OF P/N 12354173... UOC:MEE,	4
11	PAOZZ	5310007616882	96906	MS51967-2	NUT,PLAIN,HEXAGON PART OF P/N 12354173..... UOC:MEE,	4
12	PAOZZ	5315002341664	96906	MS24665-495	PIN,COTTER PART OF P/N 12354173.... UOC:MEE,	1
13	XAOZZ		19207	12354180	RATCHET WHEEL PART OF P/N 12354173. UOC:MEE,	1
14	PAOZZ	5305000680511	80204	B1821BH038C125N	SCREW,CAP,HEXAGON H PART OF P/N 12354173, 3/8 DIA X 1 1/4 INCHES LONG X 16 UNC..... UOC:MEE,	1
15	PAOZZ	5310012820429	19207	12354010-2	WASHER,FLAT PART OF P/N 12354173... UOC:MEE,	1
16	PAOZZ	3040012828631	19207	12360337	PAWL PART OF P/N 12354173..... UOC:MEE,	1
17	PAOZZ	5365012839258	19207	12360336	SPACER,SLEEVE PART OF P/N 12354173. UOC:MEE,	1
18	PAOZZ	5310013001516	19207	12354010-1	WASHER,FLAT PART OF P/N 12354173... UOC:MEE,	1
19	PAOZZ	5310000045033	94231	3-07620-311	WASHER,LOCK PART OF P/N 12354173... UOC:MEE,	1
20	PAOZZ	5310007320558	96906	MS51967-8	NUT,PLAIN,HEXAGON PART OF P/N	1

(1) ITEM NO	(2) SMR CODE	(3) NSN	(4) CAGEC	(5) PART NUMBER	(6) DESCRIPTION AND USABLE ON CODES(UOC)	(7) QTY
					12354173, 3/8 DIA HOLE, 16 UNC..... UOC:MEE,	
21	PAOZZ	5310008098541	96906	MS27183-27	WASHER,FLAT PART OF P/N 12354173... UOC:MEE,	1

END OF FIGURE

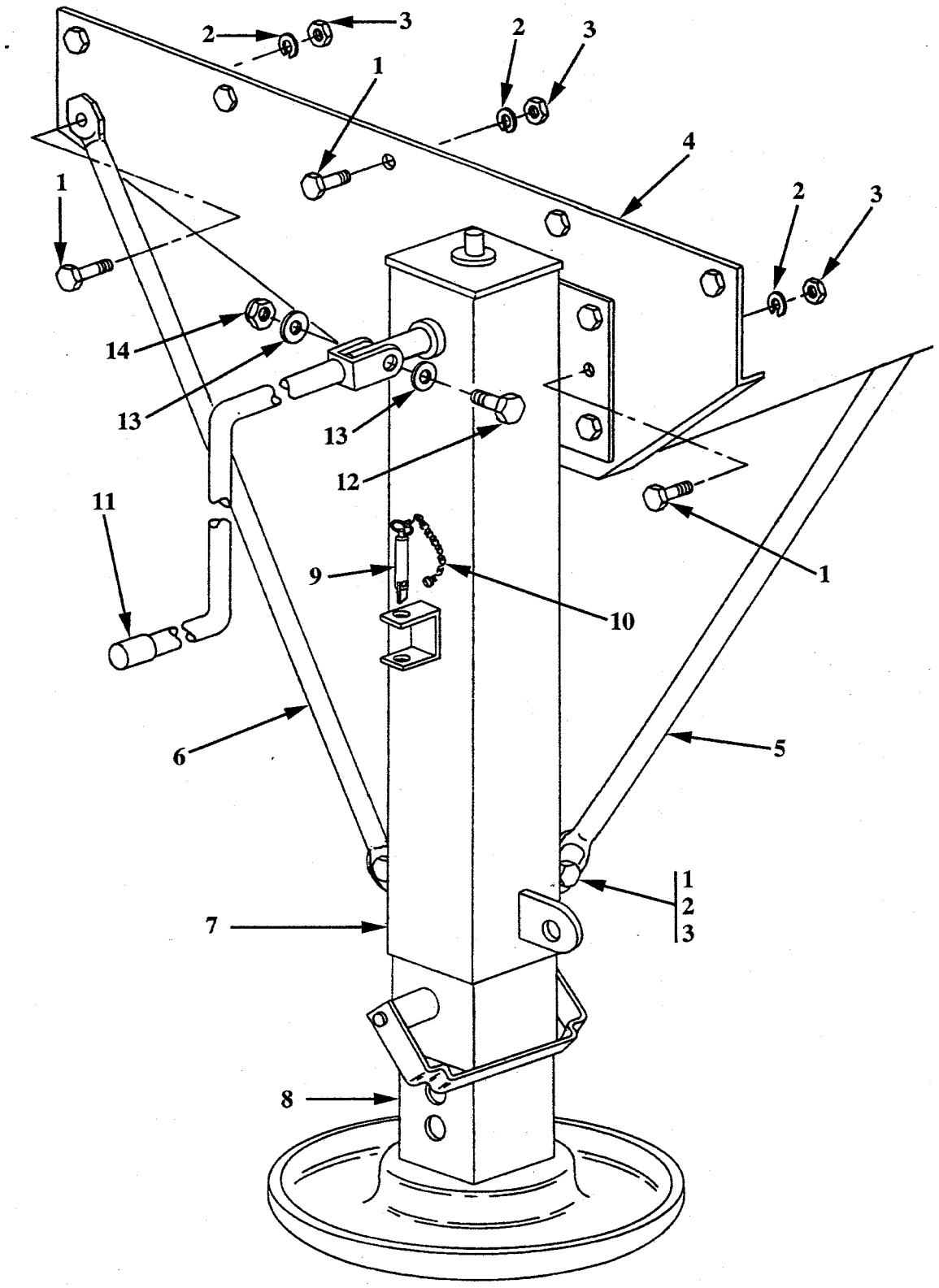

Figure 34. Landing Gear (XM1063 Only)

(1) ITEM NO	(2) SMR CODE	(3) NSN	(4) CAGEC	(5) PART NUMBER	(6) DESCRIPTION AND USABLE ON CODES(UOC)	(7) QTY
					GROUP 1507 LANDING GEAR, LEVELING JACKS FIG. 34 LANDING GEAR (XM1063 ONLY)	
1	PAOZZ	5305007245910	96906	MS90725-162	SCREW,CAP,HEXAGON H 5/8 DIA X 1 1/2 INCHES LONG X 11 UNC..... UOC:MEE,	30
2	PAOZZ	5310008206653	96906	MS35338-50	WASHER,LOCK..... UOC:MEE,	30
3	PAOZZ	5310007638920	96906	MS51967-20	NUT,PLAIN,HEXAGON 5/8 DIA HOLE, 11 UNC..... UOC:MEE,	30
4	PAOZZ	5340012823576	19207	12360392-1	BRACKET,MOUNTING LEFT HAND..... UOC:MEE,	1
4	PAOZZ	5340012823577	19207	12360392-2	BRACKET,MOUNTING RIGHT HAND..... UOC:MEE,	1
5	PAOZZ	5342012817251	19207	12353958-3	BRACING SUPPORT,TUB..... UOC:MEE,	2
6	PAOZZ	2510012840978	19207	12353958-2	BRACKET,VEHICULAR C..... UOC:MEE,	2
7	PAOZZ	2590012828544	74410	JS-S02818	LEG,SEMITRAILER RET..... UOC:MEE,	2
8	PAOZZ	2590012826994	19207	12354101	LEG,SEMITRAILER RET PART OF P/N JS-S02818..... UOC:MEE,	2
9	PAOZZ	5315011373819	19207	12315611-2	PIN,TOGGLE,HEADED..... UOC:MEE,	2
10	MOOZZ		19207	12353862-1	CHAIN MAKE FROM P/N 12353862, LENGTH AS REQUIRED..... UOC:MEE,	2
11	PAOZZ	5340011387195	19207	12315506	CRANK,HAND..... UOC:MEE,	2
12	PAOZZ	5305002693244	96906	MS90727-68	SCREW,CAP,HEXAGON H 3/8 DIA X 2 1/2 INCHES LONG X 24 UNF..... UOC:MEE,	2
13	PAOZZ	5310000877493	96906	MS27183-13	WASHER,FLAT..... UOC:MEE,	4
14	PAOZZ	5310009591488	96906	MS51922-21	NUT,SELF-LOCKING,HE..... UOC:MEE,	1

END OF FIGURE

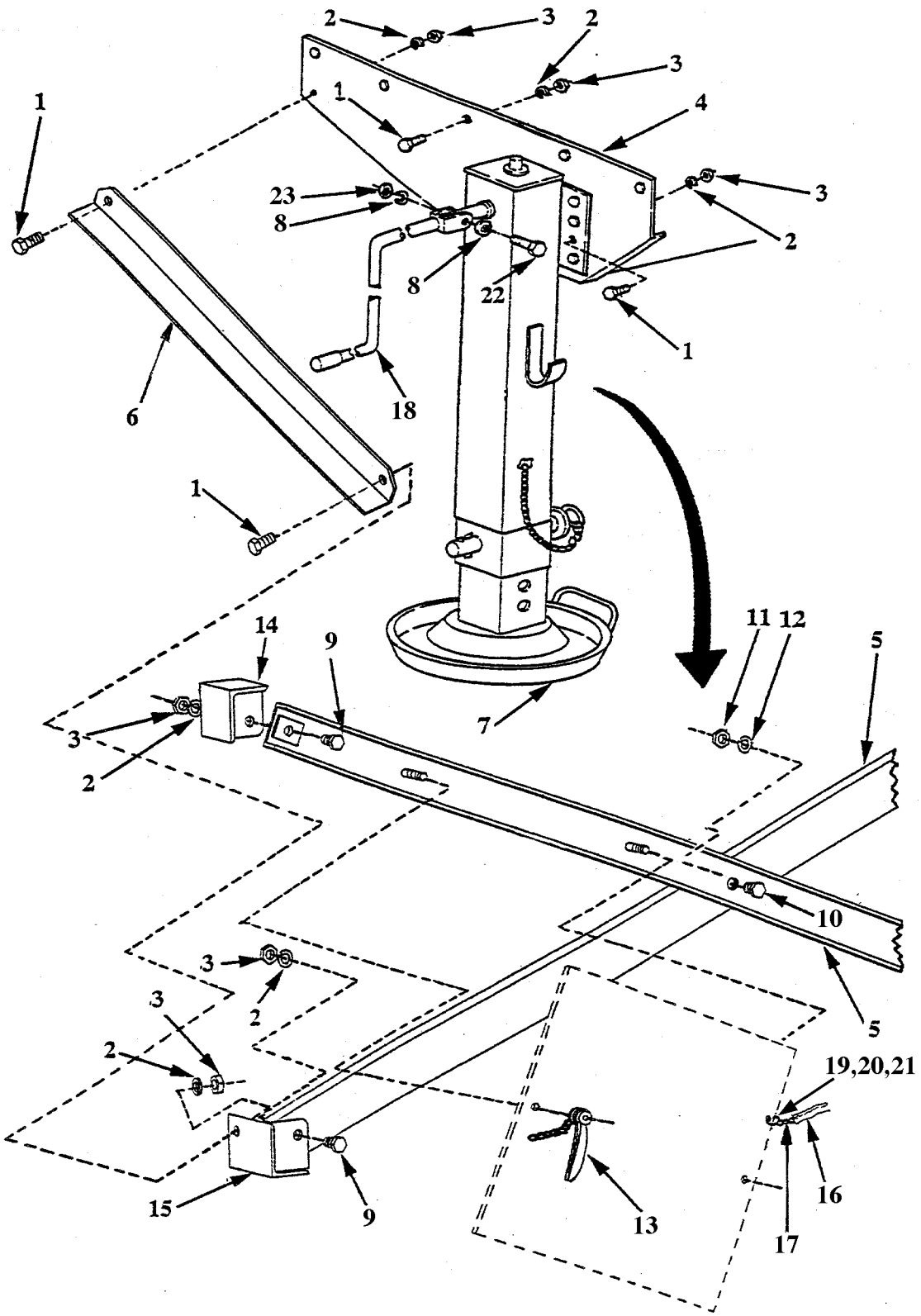

Figure 35. Landing Gear (M129A4 Only)

(1) ITEM NO	(2) SMR CODE	(3) NSN	(4) CAGEC	(5) PART NUMBER	(6) DESCRIPTION AND USABLE ON CODES(UOC)	(7) QTY
					GROUP 1507 LANDING GEAR, LEVELING JACKS FIG. 35 LANDING GEAR (M129A4 ONLY)	
1	PAOZZ	5305007245910	96906	MS90725-162	SCREW,CAP,HEXAGON H 5/8 DIA X 1-1/2 INCHES LONG X 11 UNC..... UOC:JNH,	32
2	PAOZZ	5310008206653	96906	MS35338-50	WASHER,LOCK..... UOC:JNH,	36
3	PAOZZ	5310007638920	96906	MS51967-20	NUT,PLAIN,HEXAGON 5/8 DIA HOLE, 11 UNC..... UOC:JNH,	36
4	PFOZZ	5340014413842	19207	12377885	BRACKET,MOUNTING LEFT HAND..... UOC:JNH,	1
4	PFOZZ	5340014413615	19207	12377886	BRACKET,MOUNTING RIGHT HAND..... UOC:JNH,	1
5	MFOZZ		19207	12377952	CHANNEL ASSY FRONT, SEE APPENDIX G. UOC:JNH,	1
5	MFOZZ		19207	12377953	CHANNEL ASSY REAR, SEE APPENDIX G.. UOC:JNH,	1
6	MFOZZ		19207	12377897	BRACE SEE APPENDIX G..... UOC:JNH,	2
7	XDOZZ		19207	12377887	LANDING GEAR,RETRAT..... UOC:JNH,	2
8	PAOZZ	5310000806004	96906	MS27183-14	WASHER,FLAT..... UOC:JNH,	4
9	PAOZZ	5305007245911	96906	MS90725-163	SCREW,CAP,HEXAGON H 5/8 DIA X 1 3/4 INCHES LONG X 11 UNC..... UOC:JNH,	4
10	PAOZZ	5305009399204	96906	MS90725-187	SCREW,CAP,HEXAGON H 3/4 DIA X 4 1/2 INCHES LONG X 16 UNF..... UOC:JNH,	1
11	PAOZZ	5310007638921	96906	MS51967-23	NUT,PLAIN,HEXAGON 3/4 DIA HOLE, 10 UNC..... UOC:JNH,	1
12	PAOZZ	5310005847888	96906	MS35338-51	WASHER,LOCK..... UOC:JNH,	1
13	PAOZZ	5340014413617	19207	11681409	LEVER,LOCK RELEASE..... UOC:JNH,	1
14	MFFZZ		19207	12377890	BRACKET ASSEMBLE UPPER, SEE APPENDIX G..... UOC:JNH,	2
15	MFFZZ		19207	12377889-1	BRACKET ASSEMBLY LOWER, LEFT HAND, SEE APPENDIX G..... UOC:JNH,	1
15	MFFZZ		19207	12377889-2	BRACKET ASSEMBLY LOWER, RIGHT HAND, SEE APPENDIX G..... UOC:JNH,	1
16	MOOZZ		19207	12360611-40	INSULATION SLEEVING MAKE FROM INSULATION SLEEVING, P/N M23053/1-207-0, 40	2

(1) ITEM NO	(2) SMR CODE	(3) NSN	(4) CAGEC	(5) PART NUMBER	(6) DESCRIPTION AND USABLE ON CODES(UOC)	(7) QTY
					INCHES LONG..... UOC:JNH,	
17	MOOZZ		19207	12353585-40	CHAIN MAKE FROM CHAIN, WELDED, P/N 2109976, 40 INCHES LONG..... UOC:JNH,	1
18	PAOZZ		19207	12315506-1	CRANK,HAND..... UOC:JNH,	2
19	PAOZZ	5305000680511	80204	B1821BH038C125N	SCREW,CAP,HEXAGON H 3/8 DIA X 1 1/4 INCHES LONG X 16 UNC..... UOC:JNH,	2
20	PAOZZ	5310013124960	96906	MS27183-55	WASHER,FLAT..... UOC:JNH,	2
21	PAOZZ	5310000874652	96906	MS51922-17	NUT,SELF-LOCKING,HE 1/2 DIA HOLE, 13 UNC..... UOC:JNH,	2
22	PAOZZ	5305002693244	80204	B1821BH038F250N	SCREW,CAP,HEXAGON H 3/8 DIA X 2 1/2 INCHES LONG X 24 UNF..... UOC:JNH,	2
23	PAOZZ	53100095912488	96906	MS51922-21	NUT,SELF-LOCKING,HE 3/8 DIA HOLE, 24 UNF..... UOC:JNH,	2

END OF FIGURE

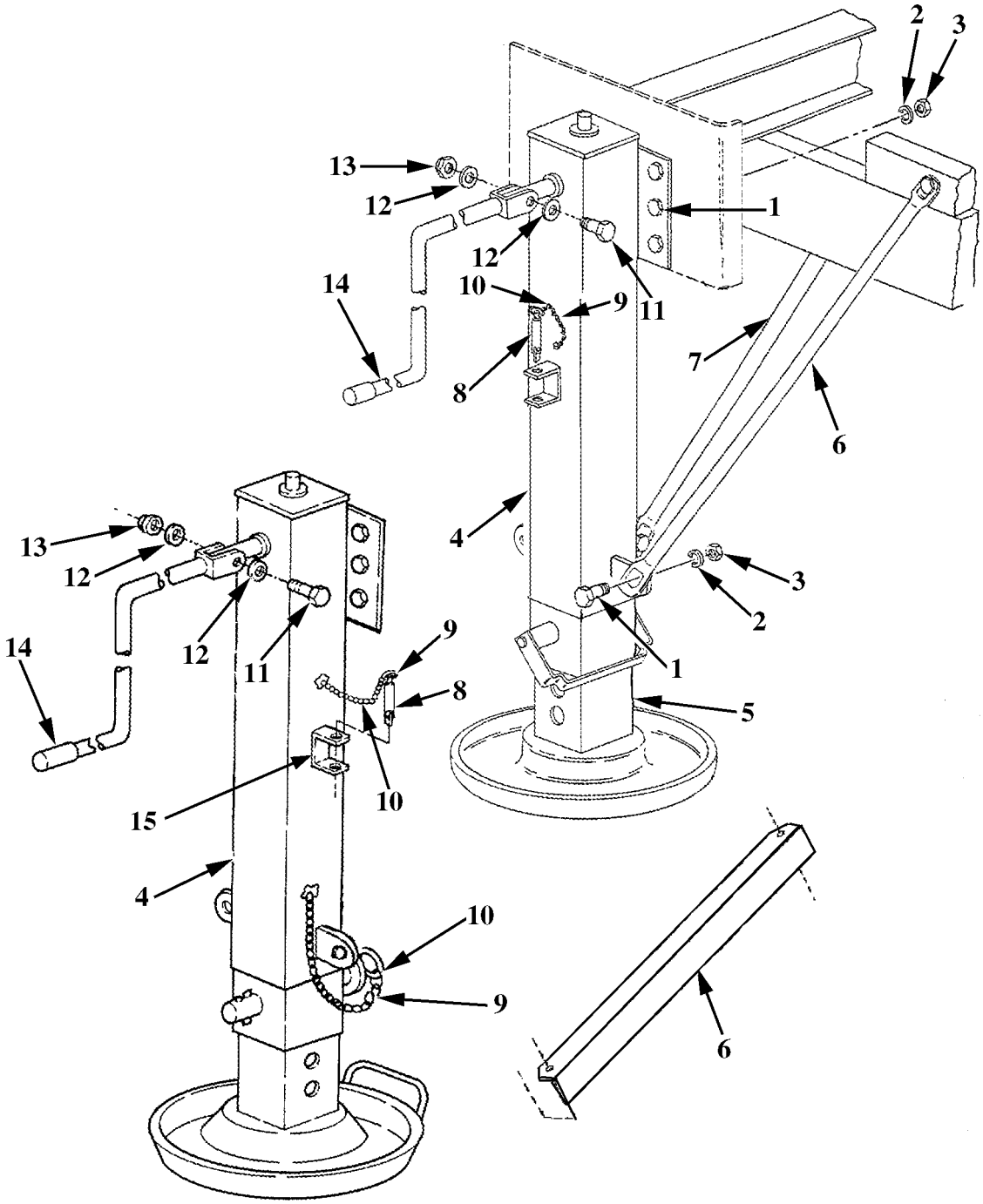

Figure 36. Leveling Jacks

(1) ITEM NO	(2) SMR CODE	(3) NSN	(4) CAGEC	(5) PART NUMBER	(6) DESCRIPTION AND USABLE ON CODES(UOC)	(7) QTY
					GROUP 1507 LANDING GEAR, LEVELING JACKS FIG. 36 LEVELING JACKS	
1	PAOZZ	5305007245910	96906	MS90725-162	SCREW,CAP,HEXAGON H 5/8 DIA X 1 1-1/2 INCHES LONG X 11 UNC..... UOC:MEE,	20
1	PAOZZ	5305007245910	96906	MS90725-162	SCREW,CAP,HEXAGON H 5/8 DIA X 1-1/2 INCHES LONG X 11 UNC, REG. NO. NXORKB THROUGH NXORC9..... UOC:JNH,	24
2	PAOZZ	5310008206653	96906	MS35338-50	WASHER,LOCK..... UOC:MEE,	20
2	PAOZZ	5310008206653	96906	MS35338-50	WASHER,LOCK REG. NO.S NX0QVH THROUGH NX0RC9..... UOC:JNH,	24
3	PAOZZ	5310007638920	96906	MS51967-20	NUT,PLAIN,HEXAGON 5/8 DIA HOLE, 11 UNC..... UOC:MEE,	20
3	PAOZZ	5310007638920	96906	MS51967-20	NUT,PLAIN,HEXAGON 5/8 DIA HOLE, 11 UNC, REG. NO.S NX0QVH THROUGH NX0RC9..... UOC:JNH,	24
4	XDOZZ		19207	12377913	LANDING LEG REG. NO.S NX0QVH THROUGH NX0RC9..... UOC:JNH,	2
4	PAOZZ	2590012828544	74410	JS-S02818	LEG,SEMITRAILER RET..... UOC:MEE,	2
5	PAOZZ	2590012826994	19207	12354101	LEG,SEMITRAILER RET PART OF P/N JS-S02818..... UOC:MEE,	2
6	PAOZZ	2590012840979	19207	12353958-1	BRACKET,VEHICULAR C..... UOC:MEE,	2
6	MFOZZ		19207	12377897	BRACE SEE APPENDIX G, REG. NO. NX0QVH THROUGH NX0RC9..... UOC:JNH,	2
7	PAOZZ	2510012833791	19207	12353958-4	BRACKET,VEHICULAR C..... UOC:MEE,	2
7	PAOZZ	2590014416766	19207	12353958-6	BRACKET,VEHICULAR C..... UOC:JNH,	2
8	PAOZZ	5315011373819	19207	12315611-2	PIN,TOGGLE,HEADED M129A4 REG. NO. NX0QVH THROUGH NX0RC9 ONLY.....	2
9	MOOZZ		19207	12353862-1	CHAIN MAKE FROM P/N 12353862, LENGTH AS REQUIRED..... UOC:MEE,	1
9	MOOZZ		19207	12353862-8	CHAIN,WELDLESS PART OF P/N 12377913, MAKE FROM CHAIN, WELDLESS, P/N 836836, 10 INCHES LONG, REG. NO. NX0QVH THROUGH NX0RC9.....	2

(1) ITEM NO	(2) SMR CODE	(3) NSN	(4) CAGEC	(5) PART NUMBER	(6) DESCRIPTION AND USABLE ON CODES(UOC)	(7) QTY
10	PAOZZ	4030009162141	96906	MS87006-53	UOC:JNH, HOOK,CHAIN,S PART OF P/N 12377913, REG. NO. NX0QVH THROUGH NX0RC9.....	2
11	PAOZZ	5305002693244	96906	MS90727-68	UOC:JNH, SCREW,CAP,HEXAGON H 3/8 DIA X 2 1/2 INCHES LONG X 24 UNF, REG. NO. NXOQVH THRU NX0RC9.....	2
12	PAOZZ	5310000877493	96906	MS27183-13	UOC:JNH, WASHER,FLAT REG. NO. NX0QVH THROUGH NX0RC9.....	4
13	PAOZZ	5310009591488	96906	MS51922-21	UOC:JNH, NUT,SELF-LOCKING,HE 3/8 DIA HOLE, 24 UNF, REG. NO. NX0QVH THROUGH NX0RC9.....	2
14	PAOZZ	5340011387195	19207	12315506	UOC:JNH, CRANK,HAND REG. NO. NX0QVH THROUGH NX0RC9..... UOC:JNH,	2

END OF FIGURE

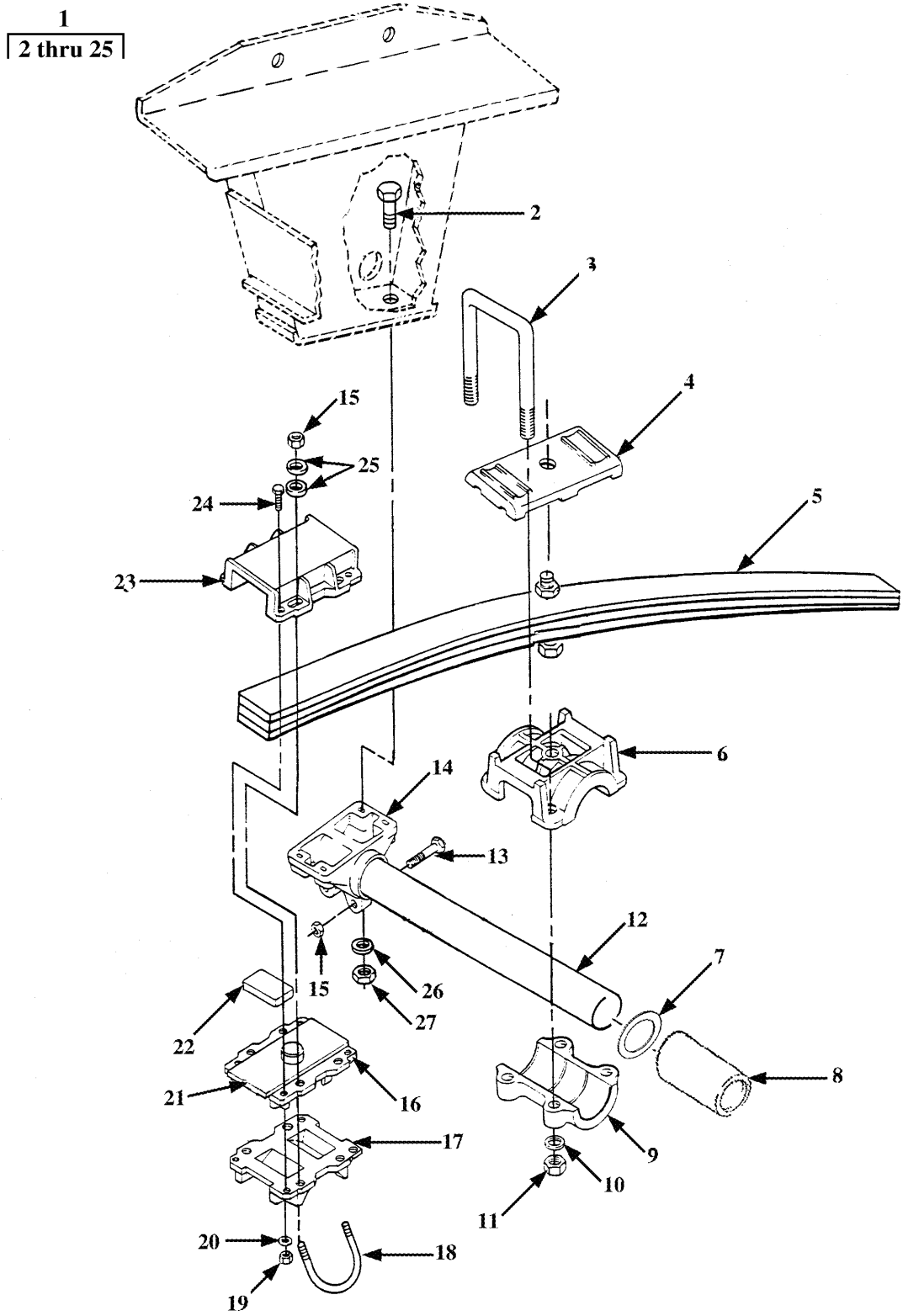

Figure 37. Spring Assembly

(1) ITEM NO	(2) SMR CODE	(3) NSN	(4) CAGEC	(5) PART NUMBER	(6) DESCRIPTION AND USABLE ON CODES(UOC)	(7) QTY
					GROUP 16 SPRINGS AND SHOCK ABSORBERS	
					GROUP 1601 SPRINGS	
					FIG. 37 SPRING ASSEMBLY	
1	AFFFF		19207	12354153-1	SUSPENSION ASSEMBLY..... UOC:JNH,	1
1	PFFFF	2510012898210	19207	12354153-2	SPRING ASSEMBLY,LEA..... UOC:MEE,	1
2	PAFZZ	5305007262555	96906	MS90727-168	.SCREW,CAP,HEXAGON H 5/8 DIA X 3 INCHES LONG X 18 UNF.....	8
3	PAFZZ	5306012819191	19207	12315340-2	.BOLT,U.....	4
4	PFFZZ	2510011012559	92967	9640-00	.PLATE,WEAR,LEAF SPR.....	2
5	PAFZZ	2510012822572	19207	12354125	.SPRING ASSEMBLY,LEA.....	2
6	PFFZZ	2520011010935	19207	12315352	.HUB TRUNNION,UPPER.....	2
7	PAFZZ	5310010987247	92967	895-00	.WASHER,FLAT.....	2
8	PAFZZ	3120012817211	19207	12354092	.BUSHING,SLEEVE.....	2
9	PFFZZ	2520011012551	19207	12315351	.HUB,TRUNNION,LOWER.....	2
10	PAFZZ	5310010987246	92967	837-00	.WASHER,FLAT.....	8
11	PAFZZ	5310010987236	19207	12315614	.NUT,PLAIN,HEXAGON 1 1/8" DIA HOLE, 12 UNF.....	8
12	PAFZZ	4710012825025	19207	12315342-2	.TUBE,METALLIC..... UOC:MEE,	2
12	PFFZZ	4710011406473	92967	893-01	.TUBE,METALLIC..... UOC:JNH,	1
13	PAFZZ	5305009408069	80204	B1821BH075F450N	.SCREW,CAP,HEXAGON H 3/4 DIA X 4 1/2 INCHES LONG X 16 UNF.....	4
14	PFFZZ	2510011415297	19207	12315353	.HANGER,TRUNION.....	2
15	PAFZZ	5310008329719	96906	MS51922-61	.NUT,SELF-LOCKING,HE 3/4 DIA X 16 UNF.....	20
16	PFFZZ	2510011009271	19207	12315349	.SEAT,LEAF SPRING.....	2
17	PFFZZ	2510011009270	19207	12315564	.SEAT,LEAF SPRING.....	2
18	PAFZZ	5306010987197	92967	10060-01	.BOLT,U.....	8
19	PAFZZ	5310002256408	96906	MS51922-53	.NUT,SELF-LOCKING,HE.....	16
20	PAFZZ	5310007848142	10001	1561635	.WASHER,FLAT..... UOC:MEE,	16
21	PFFZZ	2510011012890	19207	12315441	.PLATE,ALIGNMENT,LEA.....	2
22	PAFZZ	2590011009001	19207	12315354	.PAD,CUSHIONING.....	8
23	PAFZZ	2510011389158	19207	12315350	.CAP,END SPRING.....	4
24	PAFZZ	5305007247222	80204	B1821BH063C200N	.SCREW,CAP,HEXAGON H 5/8 DIA X 2 INCHES LONG X 11 UNF..... UOC:MEE,	16
24	PAFZZ	5305007262551	80204	B1821BH063F200N	.SCREW,CAP,HEXAGON H 5/8 DIA X 2 INCHES LONG X 18 UNF..... UOC:JNH,	16
25	PAFZZ	5310008098533	96906	MS27183-23	.WASHER,FLAT.....	32
26	PAFZZ	5310008206653	96906	MS35338-50	WASHER,LOCK.....	8
27	PAFZZ	5310007638904	96906	MS51968-21	NUT,PLAIN,HEXAGON.....	8

END OF FIGURE

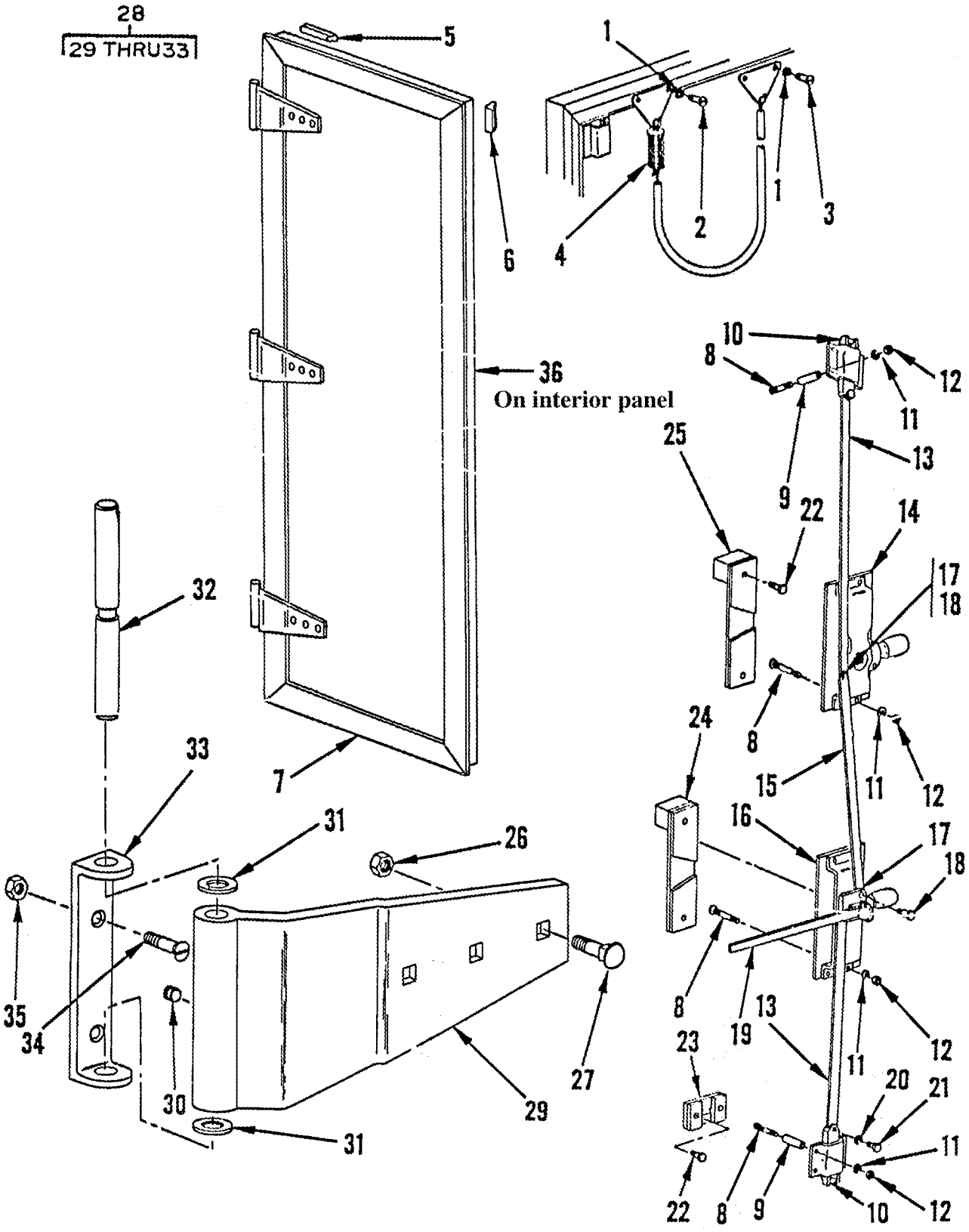

Figure 38. Front Door (XM1063 Only)

(1) ITEM NO	(2) SMR CODE	(3) NSN	(4) CAGEC	(5) PART NUMBER	(6) DESCRIPTION AND USABLE ON CODES(UOC)	(7) QTY
					GROUP 18 BODY, CAB, HOOD, AND HULL GROUP 1801 BODY, CAB, HOOD, AND HULL ASSEMBLIES FIG. 38 FRONT DOOR (XM1063 ONLY)	
1	PAOZZ	5310000453296	96906	MS35338-43	WASHER,LOCK..... UOC:MEE,	4
2	PAOZZ	5305008550958	96906	MS24629-45	SCREW,TAPPING..... UOC:MEE,	2
3	PAOZZ	5305000526917	96906	MS24629-50	SCREW,TAPPING..... UOC:MEE,	2
4	PAOZZ	5342010343072	19207	11681178	CHAIN DOOR STOP..... UOC:MEE,	1
5	MOOZZ		19207	12315658	NONMETALLIC CHANNEL MAKE FROM 12315658, LENGTH AS REQUIRED..... UOC:MEE,	19
6	PAOZZ	5330011402424	19207	12315659	SEAL,NONMETALLIC CH..... UOC:MEE,	19
7	PAOZZ	2510012905008	19207	12360379	DOOR,METAL,SWINGING..... UOC:MEE,	1
8	PAOZZ	5306012246887	19207	12331242	BOLT,RIBBED NECK..... UOC:MEE,	16
9	PAOZZ	5365012153863	19207	12331243-2	SPACER,SLEEVE..... UOC:MEE,	8
10	PFOZZ	5325011522378	19207	12315618	SLIDE FASTENER,BOLT..... UOC:MEE,	2
11	PAOZZ	5310004079566	96906	MS35338-45	WASHER,LOCK..... UOC:MEE,	8
12	PAOZZ	5310009843806	96906	MS51922-9	NUT,SELF-LOCKING,HE..... UOC:MEE,	16
13	PFOZZ	3040012159950	19207	12315484-8	CONNECTING LINK,RIG..... UOC:MEE,	2
14	PFOZZ	2540011890455	19207	12315489-1	LATCH,DOOR,VEHICULA..... UOC:MEE,	1
15	PAOZZ	3040012819722	19207	12360368	CONNECTING LINK,RIG..... UOC:MEE,	1
16	PAOZZ	5340011399679	19207	12315617-1	LOCK SET,RIM..... UOC:MEE,	1
17	PAOZZ	5365012303488	19207	12330845	SPACER,SLEEVE..... UOC:MEE,	3
18	PAOZZ	5305009390658	96906	MS51975-18	SCREW,SHOULDER 5/16 DIA HOLE, 18 UNC..... UOC:MEE,	3
19	PFOZZ	5340011528882	19207	12315674	HANDLE,BOW..... UOC:MEE,	1
20	PAOZZ	5310000045033	94231	3-07620-311	WASHER,LOCK..... UOC:MEE,	2
21	PAOZZ	5305002693234	96906	MS90727-58	SCREW,CAP,HEXAGON H 3/8 DIA X 3/4 INCH LONG X 24 UNF..... UOC:MEE,	2
22	PAOZZ	5305000680502	96906	MS90725-6	SCREW,CAP,HEXAGON H 1/4 DIA X 3/4 INCH LONG X 20 UNC.....	1

(1) ITEM NO	(2) SMR CODE	(3) NSN	(4) CAGEC	(5) PART NUMBER	(6) DESCRIPTION AND USABLE ON CODES(UOC)	(7) QTY
23	PAOZZ	5340012045674	19207	12315649	UOC:MEE, STRIKE,CATCH.....	2
24	PFOZZ	5340012067589	19207	12315633-1	UOC:MEE, PLATE,KEEPER.....	1
25	PAOZZ	5340012030321	19207	12315633-2	UOC:MEE, PLATE,MENDING.....	1
26	PAOZZ	5310000506646	96906	MS17830-6C	UOC:MEE, NUT,SELF-LOCKING,HE.....	9
27	PAOZZ	5306008162441	96906	MS35751-71	UOC:MEE, BOLT,SQUARE NECK.....	9
28	PAOZZ	5340012912310	19207	12360372	UOC:MEE, HINGE,BUTT.....	3
29	XAOZZ		19207	12360399	UOC:MEE, STRAP,RETAINING PART OF P/N 12360372.....	3
30	PAOZZ	5305007239386	96906	MS51963-64	UOC:MEE, SETSCREW PART OF P/N 12360372, 1/4 DIA X 5/16 INCH LONG X 20 UNC.....	3
31	PAOZZ	5310008095998	96906	MS27183-18	UOC:MEE, WASHER,FLAT PART OF P/N 12360372...	3
32	PAOZZ	5315012817905	19207	12360397	UOC:MEE, PIN,GROOVED,HEADLES PART OF P/N 12360372.....	3
33	PAOZZ	5340012817207	19207	12360398	UOC:MEE, BRACKET,DOUBLE ANGL PART OF P/N 12360372.....	3
34	PAOZZ	5305007817245	96906	MS35191-323	UOC:MEE, SCREW,MACHINE.....	3
35	PAOZZ	5310009591488	96906	MS51922-21	UOC:MEE, NUT,SELF-LOCKING,HE.....	6
36	PAOZZ	5320012914535	19207	12315542-8	UOC:MEE, RIVET,BLIND.....	91

END OF FIGURE

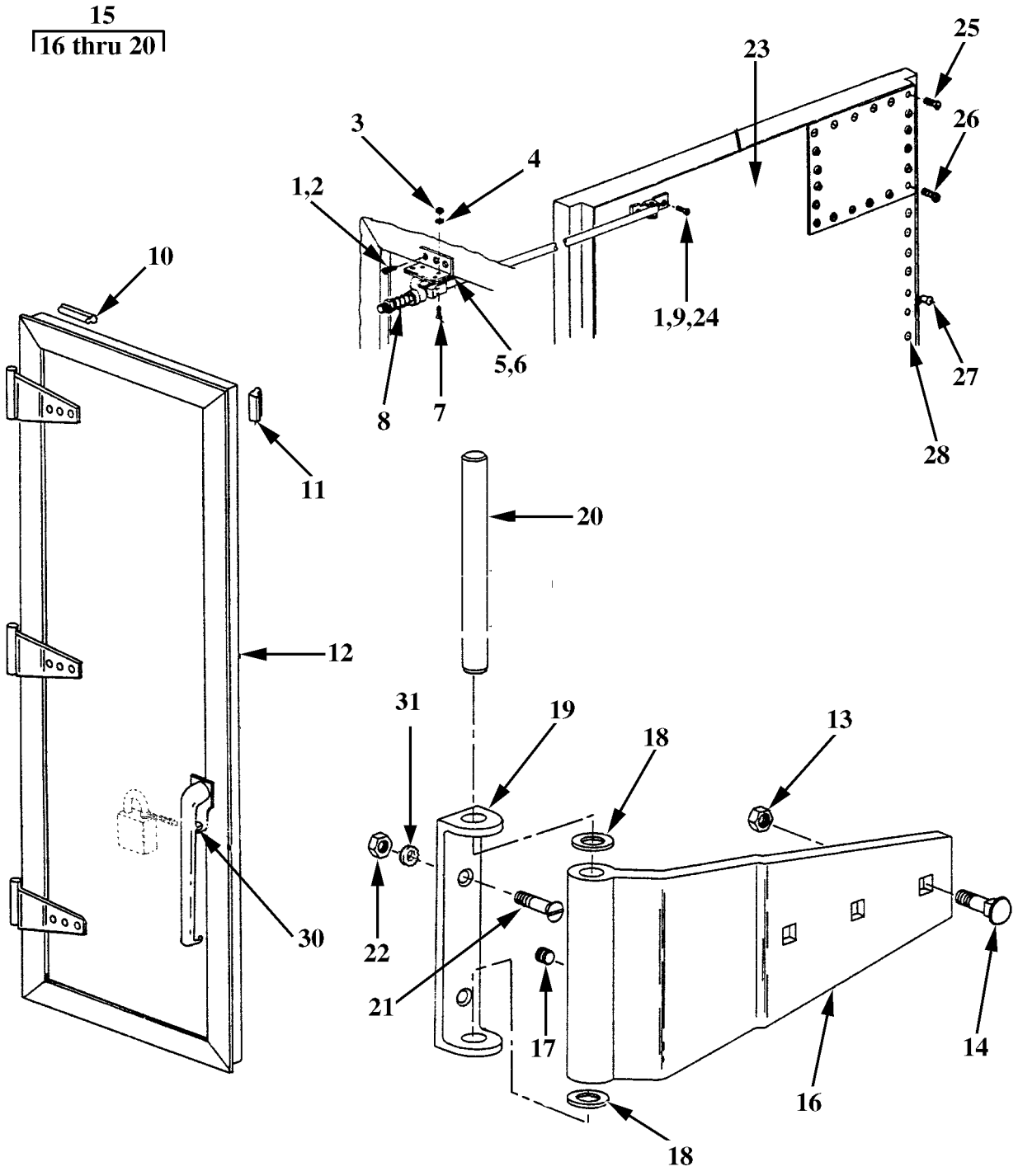

Figure 39. Rear Door

(1) ITEM NO	(2) SMR CODE	(3) NSN	(4) CAGEC	(5) PART NUMBER	(6) DESCRIPTION AND USABLE ON CODES(UOC)	(7) QTY
					GROUP 1801 BODY, CAB, HOOD, AND HULL ASSEMBLIES FIG. 39 REAR DOOR	
1	PAOZZ	5305000036769	96906	MS24627-64	SCREW,TAPPING..... UOC:MEE,	6
1	PAOZZ	5305009585246	96906	MS35190-289	SCREW,MACHINE..... UOC:JNH,	3
2	PAOZZ	5310014415554	19207	12368448-1	NUT,PLAIN,BLIND RIV 1/4 DIA X 20 UNC..... UOC:JNH,	3
3	PAOZZ	5310007616882	96906	MS51967-2	NUT,PLAIN,HEXAGON.....	4
4	PAOZZ	5310005825965	96906	MS35338-44	WASHER,LOCK.....	4
5	PAOZZ	5340012086814	19207	12330931	BRACKET,ANGLE.....	1
6	PFOZZ	5365014415199	19207	12368773	SPACER,SLEEVE..... UOC:JNH,	1
7	PAOZZ	5305009585247	96906	MS35190-291	SCREW,MACHINE.....	4
8	PFOZZ	5340012640205	19207	12330932	HOLDER,DOOR.....	1
9	XDOZZ		96906	MS27130-107	NUT,PLAIN,BLIND RIV..... UOC:JNH,	3
10	MOOZZ		19207	12315658	NONMETALLIC CHANNEL MAKE FROM 12315658, LENGTH AS REQUIRED..... UOC:MEE,	20
10	MOOZZ		19207	12360428-252	NONMETALLIC CHANNEL MAKE FROM RUBBER, P/N 12315658, 252 INCHES LONG..... UOC:JNH,	1
11	PAOZZ	5330011402424	19207	12315659	SEAL,NONMETALLIC CH..... UOC:MEE,	20
12	XBOZZ		19207	12360364	DOOR,METAL,SWINGING..... UOC:MEE,	1
12	XDOZZ		19207	12360467	DOOR FRAME,METAL..... UOC:JNH,	1
13	PAOZZ	5310000506646	96906	MS17830-6C	NUT,SELF-LOCKING,HE..... UOC:MEE,	9
13	PAOZZ	5310000874652	96906	MS51922-17	NUT,SELF-LOCKING,HE 1/2 DIA HOLE, 13 UNC..... UOC:JNH,	9
14	PAOZZ	5306008162441	96906	MS35751-71	BOLT,SQUARE NECK..... UOC:MEE,	9
14	PAOZZ	5306000891421	96906	MS35751-79	BOLT,SQUARE NECK PART OF P/N 12315569-2, 3/8 DIA X 3 1/4 INCHES LONG X 16 UNC..... UOC:JNH,	9
15	PAOZZ	5340012912310	19207	12360372	HINGE,BUTT.....	3
16	XAOZZ		19207	12360399	STRAP,RETAINING PART OF P/N 12360372.....	3
17	PAOZZ	5305007239386	96906	MS51963-64	SETSCREW PART OF P/N 12360372, 1/4 DIA X 5/16 INCH LONG, 20 UNC.....	3
18	PAOZZ	5310008095998	96906	MS27183-18	WASHER,FLAT PART OF P/N 12360372...	6
19	PAOZZ	5340012817207	19207	12360398	BRACKET,DOUBLE ANGL PART OF P/N 12360372.....	3

(1) ITEM NO	(2) SMR CODE	(3) NSN	(4) CAGEC	(5) PART NUMBER	(6) DESCRIPTION AND USABLE ON CODES(UOC)	(7) QTY
20	PAOZZ	5315012817905	19207	12360397	PIN,GROOVED,HEADLES PART OF P/N 12360372.....	3
21	PAOZZ	5305007817245	96906	MS35191-323	SCREW,MACHINE..... UOC:MEE,	6
21	PAOZZ	5305014412145	96906	MS35191-329	SCREW,MACHINE 1/4 DIA X 3 INCHES LONG X 28 UNF..... UOC:JNH,	6
22	PAOZZ	5310009591488	96906	MS51922-21	NUT,SELF-LOCKING,HE..... UOC:MEE,	6
22	PAOZZ	5310014408710	96906	MS51922-24	NUT,SELF-LOCKING,HE 3/8 DIA HOLE, 24 UNF..... UOC:JNH,	6
23	MOOZZ		19207	12360427	PANEL INTERIOR MAKE FROM PLYWOOD, P/N NN-P-530 74 1/2 X 41 1/2 INCHES LONG..... UOC:JNH,	1
24	PAOZZ	5305009571497	96906	MS35191-293	SCREW,MACHINE 1/4 DIA X 1 INCHES LONG X 28 UNF..... UOC:JNH,	3
25	PAOZZ	5305009931851	96906	MS35207-267	SCREW,MACHINE..... UOC:MEE,	41
26	PAOZZ	5305009847343	96906	MS35191-276	SCREW,MACHINE..... UOC:MEE,	12
27	XDOZZ		19207	11684418-3	RIVET,BLIND..... UOC:JNH,	44
27	PAOZZ	5320012914535	19207	12315542-8	RIVET,BLIND..... UOC:MEE,	101
28	XDOZZ		19207	11684418-1	NUT,PLAIN,BLIND RIV..... UOC:JNH,	58
29	XDOZZ		19207	11684418-2	RIVET,BLIND..... UOC:JNH,	21
30	PAOZZ	5305008550960	96906	MS24629-36	SCREW,TAPPING MOUNTS PADLOCK (SEE APPENDIX C)..... UOC:JNH,	1
31	PAOZZ	5310000877493	96906	MS27183-13	WASHER,FLAT..... UOC:JNH,	6

END OF FIGURE

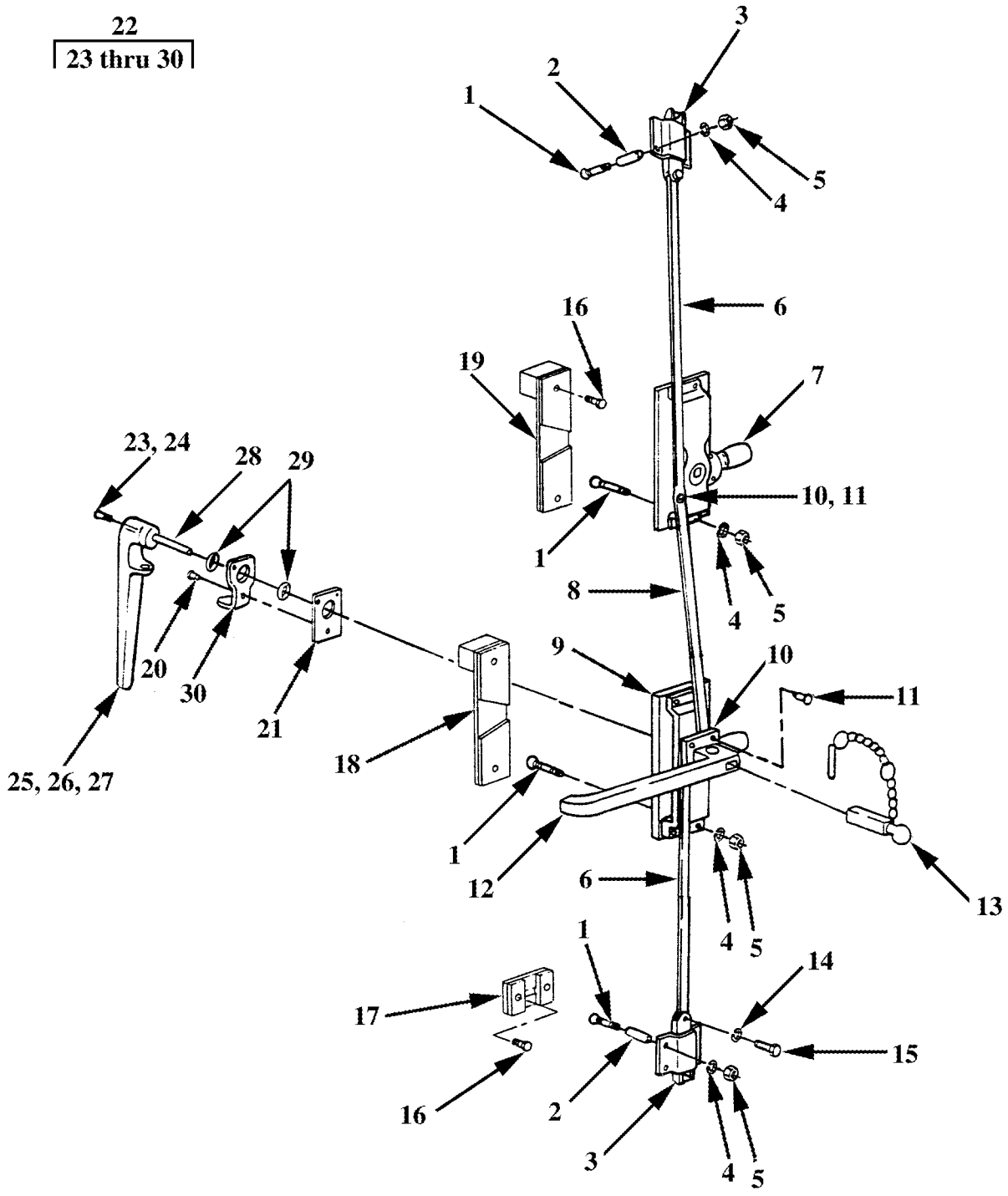

Figure 40. Rear Door Lock Components

(1) ITEM NO	(2) SMR CODE	(3) NSN	(4) CAGEC	(5) PART NUMBER	(6) DESCRIPTION AND USABLE ON CODES(UOC)	(7) QTY
					GROUP 1801 BODY, CAB, HOOD, AND HULL ASSEMBLIES FIG. 40 REAR DOOR LOCK COMPONENTS	
1	PAOZZ	5306012246887	19207	12331242	BOLT,RIBBED NECK.....	16
2	PAOZZ	5365012153863	19207	12331243-2	SPACER,SLEEVE..... UOC:MEE,	8
2	MOOZZ		19207	12331243-4	SPACER MAKE FROM SPACER, SLEEVE, P/N 12331243-3, 2 5/32 INCHES LONG.. UOC:JNH,	8
3	PFOZZ	5325011522378	19207	12315618	SLIDE FASTENER,BOLT.....	2
4	PAOZZ	5310004079566	96906	MS35338-45	WASHER,LOCK.....	16
5	PAOZZ	5310009843806	96906	MS51922-9	NUT,SELF-LOCKING,HE.....	16
6	PFOZZ	3040011867888	19207	12315484-3	CONNECTING LINK,RIG.....	2
7	PAOZZ	2540011890454	19220	11-2525-50L	LATCH,DOOR,VEHICULA..... UOC:JNH,	1
7	PFOZZ	2540011890455	19207	12315489-1	LATCH,DOOR,VEHICULA..... UOC:MEE,	1
8	PAOZZ	3040012819722	19207	12360368	CONNECTING LINK,RIG.....	1
9	PAOZZ	5340011399679	19207	12315617-1	LOCK SET,RIM.....	1
10	PAOZZ	5365012303488	19207	12330845	SPACER,SLEEVE PART OF P/N 11-2525-50L AND 12315489-1..... UOC:JNH,	4
10	PAOZZ	5365012303488	19207	12330845	SPACER,SLEEVE..... UOC:MEE,	3
11	PAOZZ	5305009390658	96906	MS51975-18	SCREW,SHOULDER 5/16 DIA HOLE, 18 UNC..... UOC:MEE,	3
11	PAOZZ	5305009390658	96906	MS51975-18	SCREW,SHOULDER 5/16 DIA HOLE, 18 UNC, PART OF P/N 11-2525-50L AND 12315489-1..... UOC:JNH,	4
12	PFOZZ	5340011528882	19207	12315674	HANDLE,BOW.....	1
13	PFOZZ	5315012175316	19207	12331240	PIN,QUICK RELEASE.....	1
14	PAOZZ	5310000045033	94231	3-07620-311	WASHER,LOCK PART OF P/N 12315618...	2
15	PAOZZ	5305002693234	80204	B1821BH038F075N	SCREW,CAP,HEXAGON H PART OF P/N 12315618, 3/8 DIA X 3/4 INCH LONG X 24 UNF.....	2
16	PAOZZ	5305000680502	96906	MS90725-6	SCREW,CAP,HEXAGON H..... UOC:MEE,	8
17	PAOZZ	5340012045674	19207	12315649	STRIKE,CATCH..... UOC:MEE,	2
18	PFOZZ	5340012067589	19207	12315633-1	PLATE,KEEPER..... UOC:MEE,	1
19	PAOZZ	5340012030321	19207	12315633-2	PLATE,MENDING..... UOC:MEE,	1
20	PFOZZ	5320011509681	19207	12315644-3	RIVET,BLIND..... UOC:MEE,	3
21	PAOZZ	5365012086216	19207	12330884	SPACER,PLATE.....	1
22	PFOZZ	3040012815264	19207	12315569-1	LEVER,MANUAL CONTRO.....	1

(1) ITEM NO	(2) SMR CODE	(3) NSN	(4) CAGEC	(5) PART NUMBER	(6) DESCRIPTION AND USABLE ON CODES(UOC)	(7) QTY
22	PAOZZ	2540011931839	19207	12315569-2	UOC:MEE, HANDLE,DOOR,VEHICUL.....	1
23	PAOZZ		96906	MS16997-61	UOC:JNH, SCREW,CAP,SOCKET HE.....	1
23	PAOZZ	5305009789380	96906	MS16997-64	UOC:MEE, SCREW,CAP,SOCKET HE PART OF P/N 12315569-2, 3/16 FL CHM, 1/4 X 1-1/2 20 UNC.....	1
24	PAOZZ	5310004079566	96906	MS35338-45	UOC:JNH, WASHER,LOCK PART OF P/N 12315569-2.	1
25	PAOZZ	2540011521056	19207	12307731	UOC:JNH, HANDLE,DOOR,VEHICUL.....	1
26	XAOZZ		19207	12330842	SLEEVE PART OF P/N 12315569-2.....	1
27	PAOZZ	5315007325974	96906	MS39086-164	UOC:JNH, PIN,SPRING PART OF P/N 12315569-2..	1
28	XAOZZ		19207	12307741-2	UOC:JNH, SHAFT PART OF P/N 12315569-2.....	1
29	PAOZZ	5331006185902	96906	MS28775-122	UOC:JNH, O-RING PART OF P/N 12315569-2.....	2
29	PAOZZ	5331006410231	96906	MS28775-216	UOC:JNH, O-RING.....	2
30	PFOZZ	5340011387153	19207	12315571	UOC:MEE, ESCUTCHEON PLATE PART OF P/N 12315569-2.....	1

END OF FIGURE

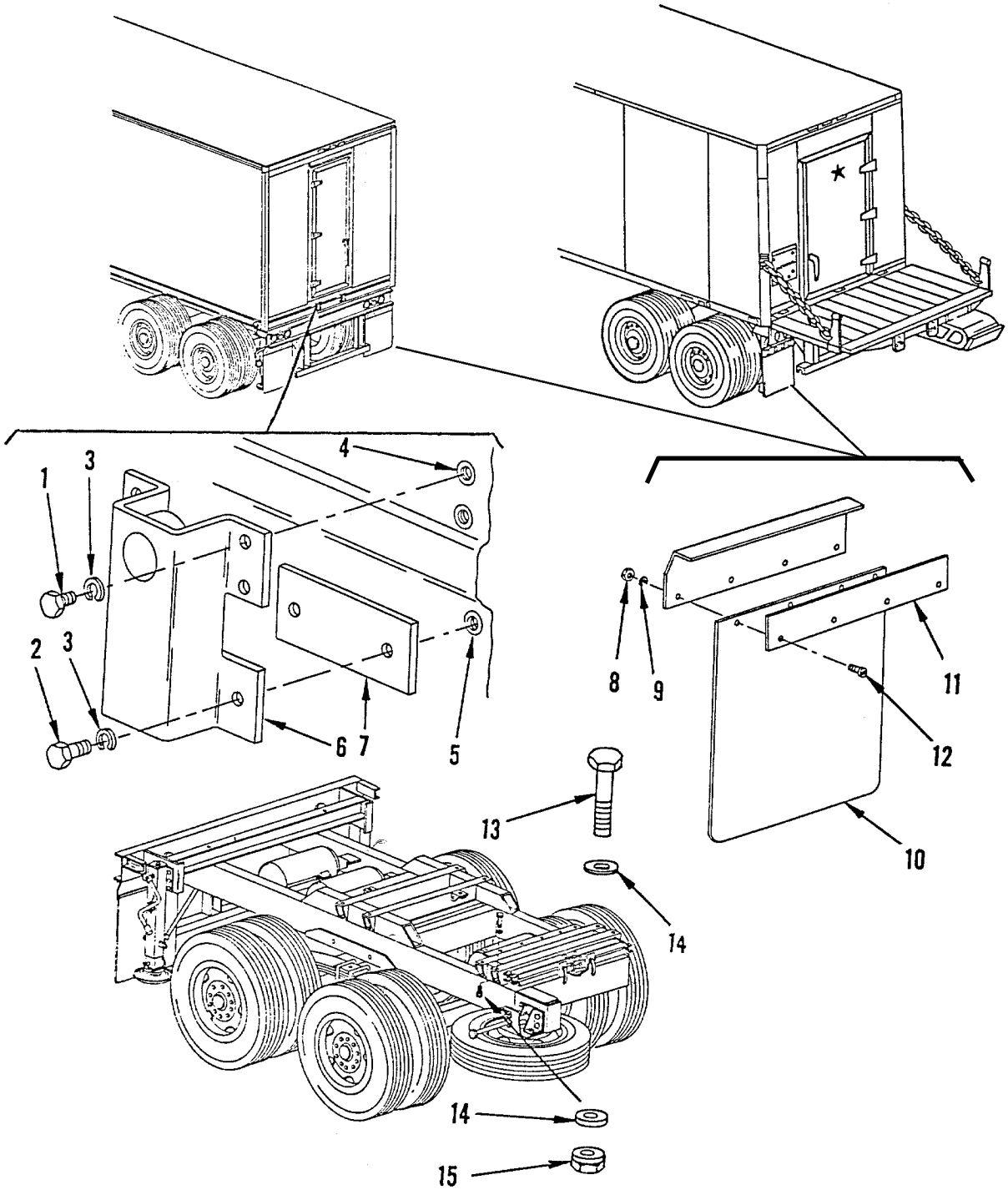

Figure 41. Ladder Bracket, Splash Guard, and Dolly Attaching Hardware

(1) ITEM NO	(2) SMR CODE	(3) NSN	(4) CAGEC	(5) PART NUMBER	(6) DESCRIPTION AND USABLE ON CODES(UOC)	(7) QTY
					GROUP 1801 BODY, CAB, HOOD, AND HULL ASSEMBLIES FIG. 41 LADDER BRACKET, SPLASH GUARD, AND DOLLY ATTACHING HARDWARE	
1	PAOZZ	5306002258499	96906	MS90725-34	BOLT,MACHINE 5/16 DIA X 1 INCH LONG X 18 UNC..... UOC:MEE,	16
2	PAOZZ	5306010758519	96906	MS90725-36	BOLT,MACHINE..... UOC:MEE,	8
3	PAOZZ	5310004079566	96906	MS35338-45	WASHER,LOCK..... UOC:MEE,	24
4	PAOZZ	5310009375950	83187	S31B256	NUT,PLAIN,BLIND RIV..... UOC:MEE,	16
5	PAOZZ	5310002525868	03481	S31B406	NUT,PLAIN,BLIND RIV..... UOC:MEE,	8
6	PAOZZ	5340012968871	19207	12360531	BRACKET,DOUBLE ANGL..... UOC:MEE,	4
7	PFOZZ	5365012829286	19207	12330833-38	SPACER,PLATE..... UOC:MEE,	4
8	PAOZZ	5310007320558	96906	MS51967-8	NUT,PLAIN,HEXAGON 3/8 DIA HOLE, 16 UNC.....	8
9	PAOZZ	5310000045033	94231	3-07620-311	WASHER,LOCK.....	8
10	PAOZZ	2540008975917	19207	10882200	GUARD,SPLASH,VEHICU.....	2
11	PFOZZ	5365007175617	19207	10944341	SPACER,PLATE.....	2
12	PAOZZ	5305002693211	96906	MS90725-60	SCREW,CAP,HEXAGON H 3/8 DIA X 1 INCH LONG X 16 UNC..... UOC:JNH,	8
12	PAOZZ	5305007626041	96906	MS90727-189	SCREW,CAP,HEXAGON H..... UOC:MEE,	10
13	PAOZZ	5305007626041	80204	B1821BH075F250N	SCREW,CAP,HEXAGON H 3/4 DIA X 2 1/2 INCH LONG X 16 UNF.....	20
14	PAOZZ	5310008098533	96906	MS27183-23	WASHER,FLAT.....	20
15	PAOZZ	5310009826810	96906	MS21044N12	NUT,SELF-LOCKING,HE.....	10

END OF FIGURE

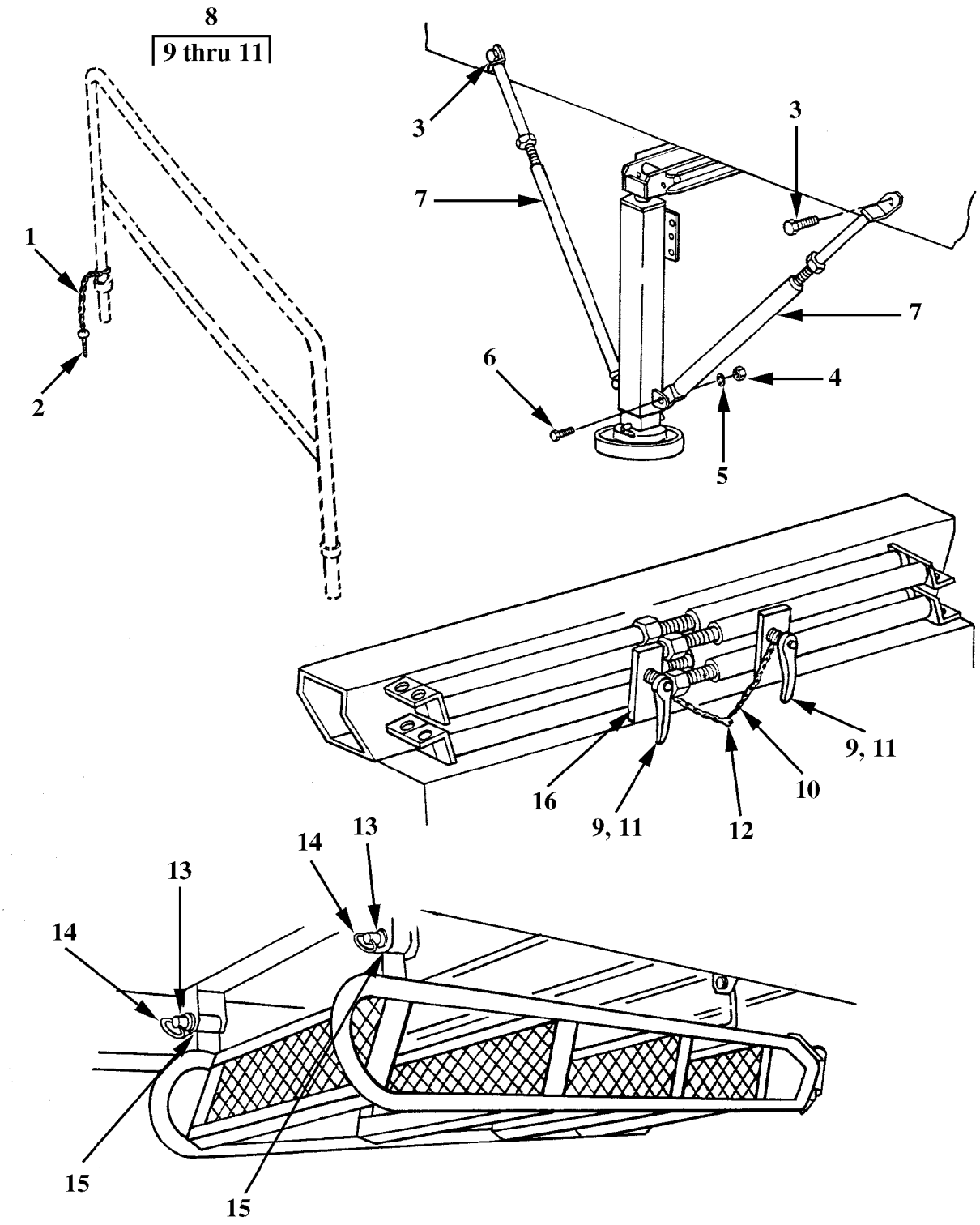

Figure 42. Ladder Stowage, Lifting Brace Stowage, Handrail, and Lifting Jack

(1) ITEM NO	(2) SMR CODE	(3) NSN	(4) CAGEC	(5) PART NUMBER	(6) DESCRIPTION AND USABLE ON CODES(UOC)	(7) QTY
					GROUP 1801 BODY, CAB, HOOD, AND HULL ASSEMBLIES FIG. 42 LADDER STOWAGE, LIFTING BRACE STOWAGE, HANDRAIL, AND LIFTING JACKS	
1	MOOZZ		19207	12353860-1	CHAIN,WELDLESS PART OF P/N 12368561 (SEE APPENDIX C), MAKE FROM CHAIN, WELDLESS, P/N 836836, 7 INCHES LONG..... UOC:JNH,	1
2	PAOZZ	5315011864115	50620	38S	PIN,TOGGLE,HEADED..... UOC:JNH,	1
3	PAOZZ	5305012858886	96906	MS90727-250	SCREW,CAP,HEXAGON H 1 1/8 DIA X 2 INCHES LONG X 12 UNF.....	4
4	PAOZZ	5310007638920	96906	MS51967-20	NUT,PLAIN,HEXAGON.....	4
5	PAOZZ	5310008206653	96906	MS35338-50	WASHER,LOCK.....	4
6	PAOZZ	5305007245910	96906	MS90725-162	SCREW,CAP,HEXAGON H.....	4
7	PAOZZ	2510012824194	19207	12360400	BRACE ARM ASSEMBLY.....	4
8	PAOZZ	2540011578833	19207	11684306	HANDLE,DOOR,VEHICUL..... UOC:MEE,	2
9	PAOZZ	5340014413617	19207	11681409	LEVER,LOCK RELEASE..... UOC:JNH,	2
9	PFOZZ	2540012822537	19207	12353955	HANDLE,DOOR,VEHICUL..... UOC:MEE,	2
10	MOOZZ		19207	12353862-6	CHAIN PART OF P/N 12353955 AND 11681409, MAKE FROM CHAIN, WELDLESS, P/N 836836, 8 5/16 INCHES LONG.....	1
11	PAOZZ	4030012820988	19207	8747064	HOOK,CHAIN,S PART OF P/N 12353955 AND 11681409.....	2
12	PFOZZ	5305000526872	96906	MS24627-49	SCREW,TAPPING.....	1
13	PAOZZ	5315012817906	19207	12315611-5	PIN,TOGGLE,EYE COLL..... UOC:MEE,	2
13	PAOZZ	5315011864115	50620	38S	PIN,TOGGLE,HEADED..... UOC:JNH,	2
14	MOOZZ		19207	12353862-5	CHAIN MAKE FROM CHAIN, WELDLESS, P/N 836836, 7 3/8 INCHES LONG.....	2
15	PAOZZ	5305000526921	96906	MS24629-57	SCREW,TAPPING.....	2
16	MFFZZ		19207	12353952	PLATE,RETAINING SEE APPENDIX G.....	2

END OF FIGURE

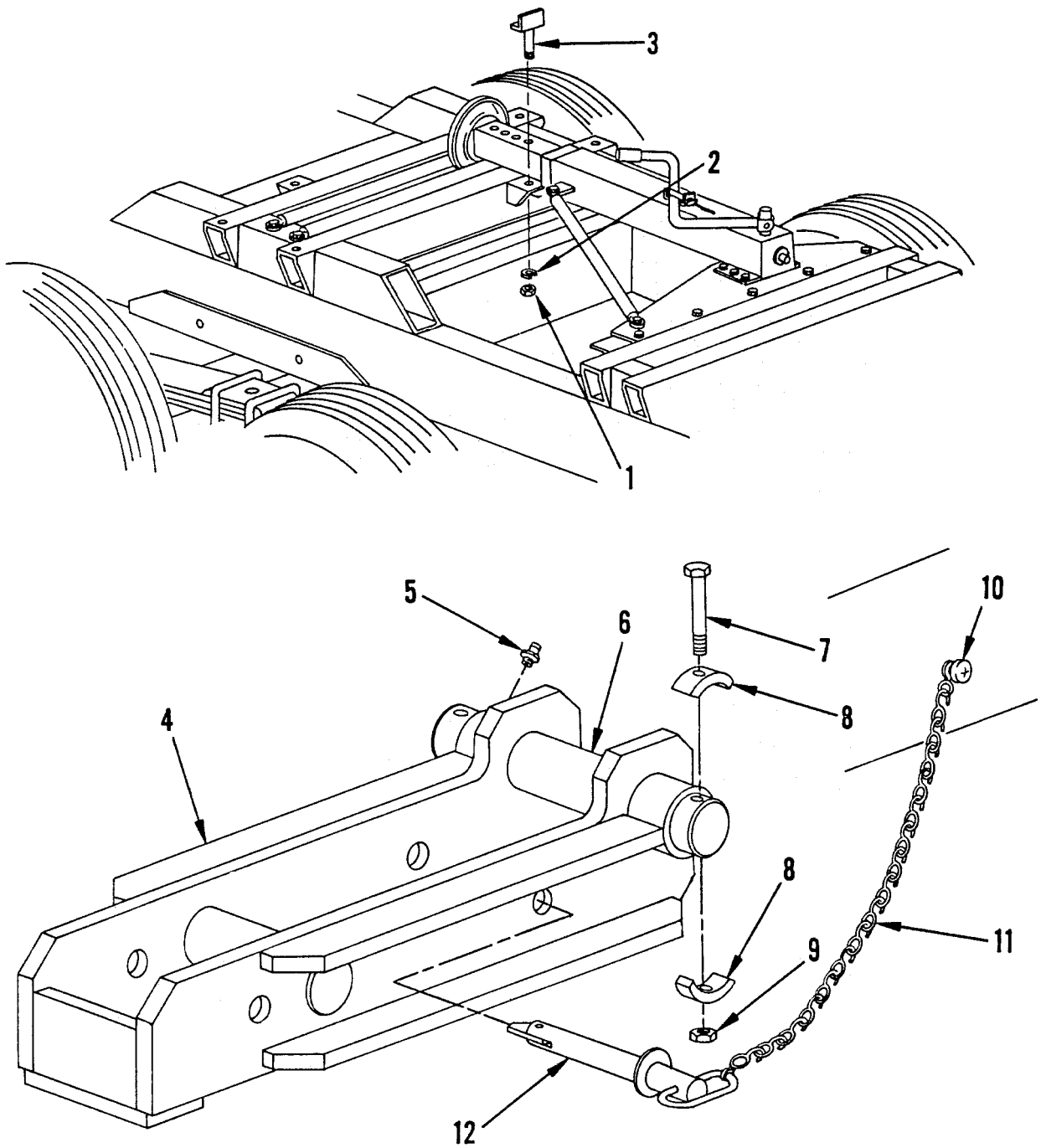

Figure 43. Landing Gear Stowage and Lifting Arm Assembly

(1) ITEM NO	(2) SMR CODE	(3) NSN	(4) CAGEC	(5) PART NUMBER	(6) DESCRIPTION AND USABLE ON CODES(UOC)	(7) QTY
					GROUP 1801 BODY, CAB, HOOD, AND HULL ASSEMBLIES FIG. 43 LANDING GEAR STOWAGE AND LIFTING ARM ASSEMBLY	
1	PAOZZ	5310007680318	96906	MS51967-14	NUT,PLAIN,HEXAGON 1/2 DIA HOLE X 13 UNC..... UOC:MEE,	2
2	PAOZZ	5310005845272	80045	23MS35338-10	WASHER,LOCK..... UOC:MEE,	2
3	XBOZZ		19207	12360410	RETAINER,ASSEMBLED..... UOC:MEE,	2
4	PAOZZ	5340012738823	19207	12353888	BRACKET,MOUNTING..... UOC:MEE,	6
4	PAOZZ	5340012738823	19207	12353888	BRACKET,MOUNTING..... UOC:JNH,	4
5	PAOZZ	4730000504203	96906	MS15001-1	FITTING,LUBRICATION..... UOC:MEE	12
5	PAOZZ	4730000504203	96906	MS15001-1	FITTING,LUBRICATION..... UOC:JNH,	8
6	PAOZZ	3040012819706	19207	12360414	SHAFT,STRAIGHT..... UOC:MEE,	6
6	PAOZZ	3040012819706	19207	12360414	SHAFT,STRAIGHT..... UOC:JNH,	4
7	PAOZZ	5306012820418	96906	MS51106-340	BOLT,MACHINE 5/16 DIA X 2 1/2 INCHES LONG X 24 UNF..... UOC:MEE,	12
7	PAOZZ	5306012820418	96906	MS51106-340	BOLT,MACHINE 5/16 DIA X 2 1/2 INCHES LONG UNF..... UOC:JNH,	8
8	PAOZZ	5340012839296	19207	12360426	CLAMP,RIM CLENCHING..... UOC:MEE,	24
8	PAOZZ	5340012839296	19207	12360426	CLAMP,RIM CLENCHING..... UOC:JNH,	16
9	PAOZZ	5310000880553	96906	MS21044N5	NUT,SELF-LOCKING,HE 5/16 DIA HOLE, 24 UNJF..... UOC:MEE,	12
9	PAOZZ	5310000880553	96906	MS21044N5	NUT,SELF-LOCKING,HE 5/16 DIA HOLE, 24 UNJF..... UOC:JNH,	8
10	PAOZZ	5305000526921	96906	MS24629-57	SCREW,TAPPING 1/4 DIA HOLE X 1/2 INCH LONG..... UOC:MEE,	6
10	PAOZZ	5305000526921	96906	MS24629-57	SCREW,TAPPING 1/4 DIA HOLE X 1/2 INCH LONG..... UOC:JNH,	4
11	MOOZZ		19207	12353862-7	CHAIN MAKE FROM CHAIN, WELDLESS, P/N 12353862, LENGTH AS REQUIRED.... UOC:MEE,	1

(1) ITEM NO	(2) SMR CODE	(3) NSN	(4) CAGEC	(5) PART NUMBER	(6) DESCRIPTION AND USABLE ON CODES(UOC)	(7) QTY
11	MOOZZ		19207	12353862-7	CHAIN MAKE FROM CHAIN, WELDLESS, P/N 836836, 12 INCHES LONG..... UOC:JNH,	4
12	PFOZZ	5315012829307	19207	12360415	PIN,TOGGLE,HEADED..... UOC:MEE,	6
12	PAOZZ	5315012829307	19207	12360415	PIN,TOGGLE,HEADED..... UOC:JNH,	4

END OF FIGURE

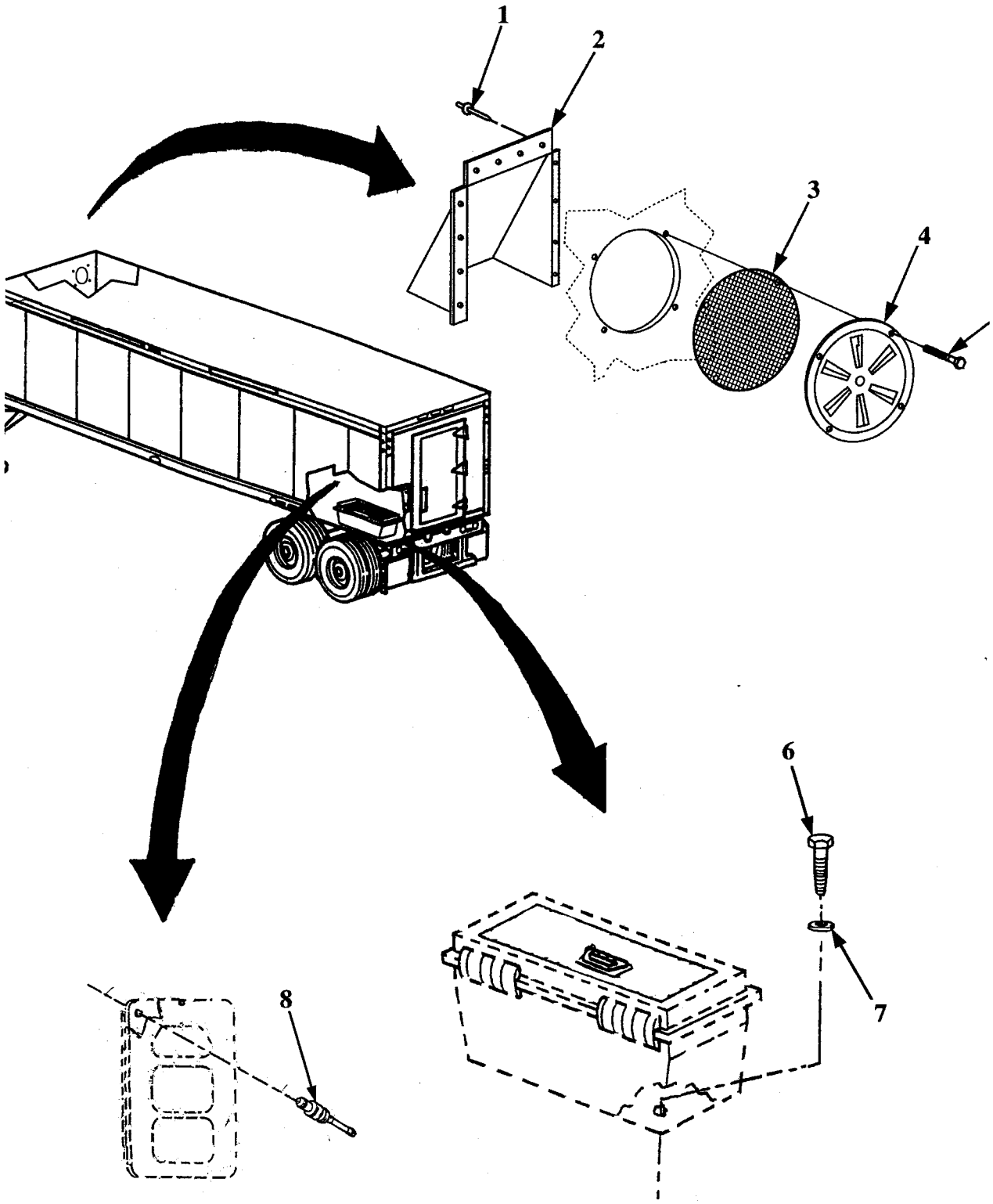

Figure 44. M129A4 Vents, TM Container, and Tool Box

(1) ITEM NO	(2) SMR CODE	(3) NSN	(4) CAGEC	(5) PART NUMBER	(6) DESCRIPTION AND USABLE ON CODES(UOC)	(7) QTY
					GROUP 1808 STOWAGE RACKS, BOXES, STRAPS, CARRYING CASES, CABLE REELS, HOSE REELS, ETC. FIG. 44 M129A4 VENTS, TM CONTAINER, AND TOOL BOX	
1	PAOZZ	5320013490933	11815	BAPV-64	RIVET,BLIND..... UOC:JNH,	24
2	PAOZZ	4140014503049	63576	KTS-1769	COVER,AIR INLET..... UOC:JNH,	2
3	PAOZZ		63576	KTS-1809	SCREEN,AIR INLET..... UOC:JNH,	2
4	PAOZZ		6B565	7502-1	GRILLE,AIR INLET..... UOC:JNH,	2
5	PAOZZ	5305002240147	96906	MS35492-30	SCREW,WOOD NO.4 FLAT PAN HEAD, 3/4 INCH LONG..... UOC:JNH,	8
6	PAOZZ	5305004324254	96906	MS51861-69	SCREW,TAPPING 1/4 DIA X 1 INCH LONG UOC:JNH,	4
7	PAOZZ	5310008094058	96906	MS27183-10	WASHER,FLAT..... UOC:JNH,	4
8	PAOZZ	5320014415197	98996	RV6606-8-6W	RIVET,BLIND..... UOC:JNH,	4

END OF FIGURE

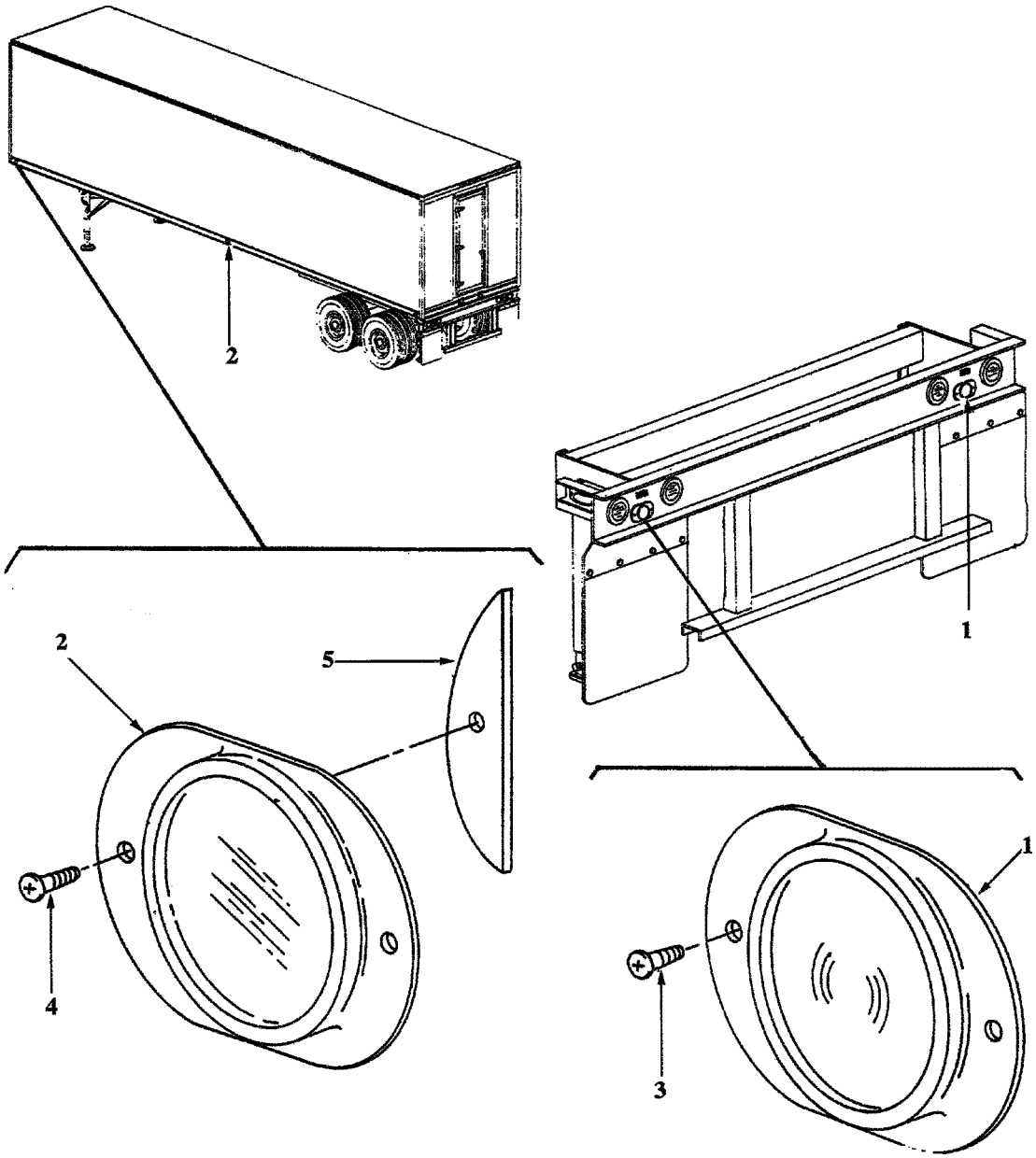

Figure 45. Reflectors

(1) ITEM NO	(2) SMR CODE	(3) NSN	(4) CAGEC	(5) PART NUMBER	(6) DESCRIPTION AND USABLE ON CODES(UOC)	(7) QTY
					GROUP 22 BODY, CHASSIS, AND HULL ACCESSORY ITEMS	
					GROUP 2202 ACCESSORY ITEMS	
					FIG. 45 REFLECTORS	
1	PAOZZ	9905002052795	96906	MS35387-1	REFLECTOR,INDICATIN RED.....	4
2	PAOZZ	9905002023639	96906	MS35387-2	REFLECTOR,INDICATIN AMBER.....	4
3	PAOZZ	5305000526923	96906	MS24629-59	SCREW,TAPPING USED ON DOLLY.....	4
4	PAOZZ	5305008550964	96906	MS24629-48	SCREW,TAPPING USED ON VAN BODY..... UOC:JNH,	12
4	PAOZZ	5305004324252	96906	MS51861-66	SCREW,TAPPING USED ON VAN BODY..... UOC:MEE,	12
5	MOOZZ		19207	12360386	SPACER USED ON FRONT OF EACH SIDE, SEE APPENDIX G..... UOC:JNH,	2
5	PAOZZ	2510012828569	19207	12360388	FRAME SECTION,STRUC USED ON EACH SIDE AT BOTTOM FRONT..... UOC:MEE,	2

END OF FIGURE

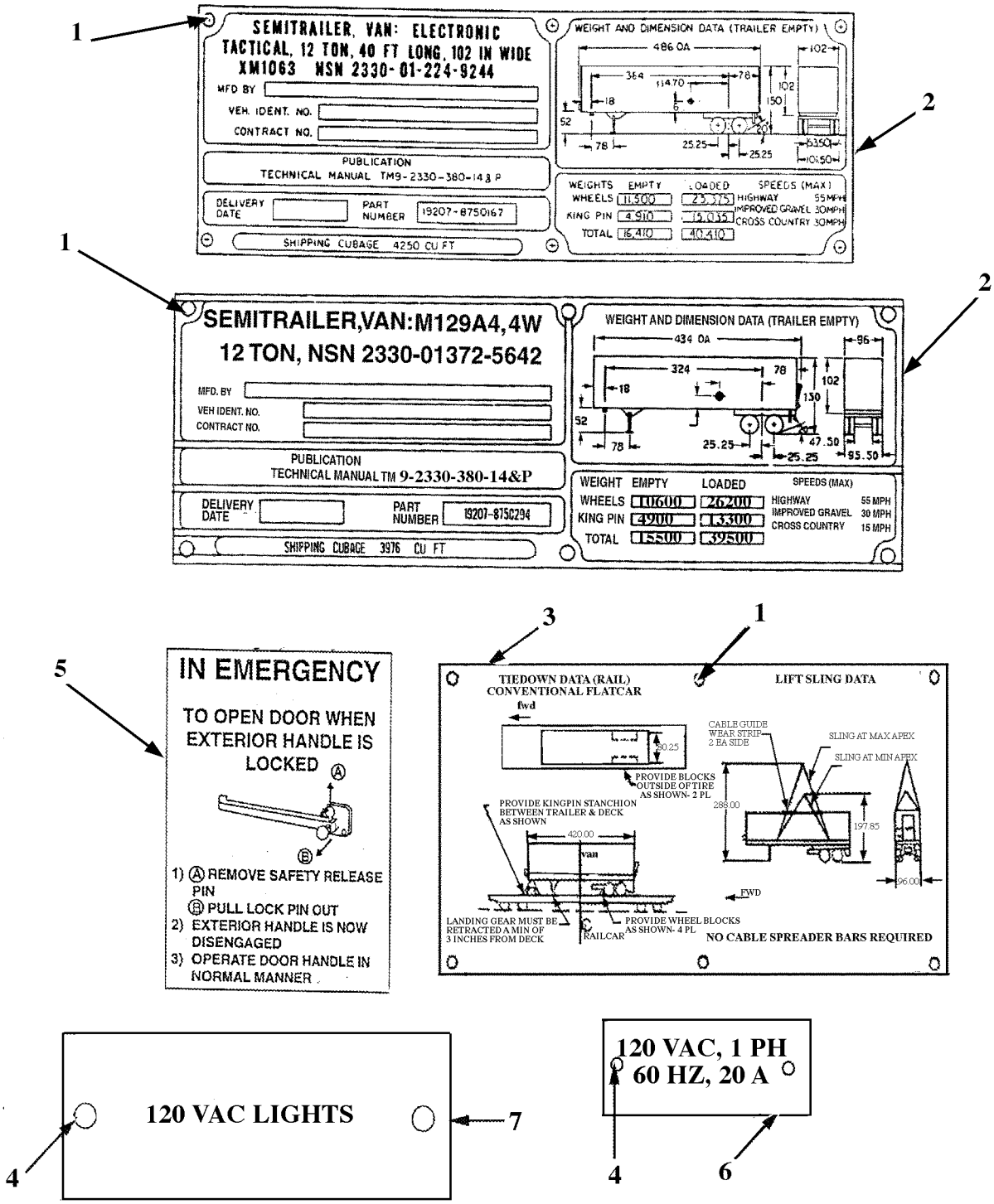

Figure 46. Data Plates

(1) ITEM NO	(2) SMR CODE	(3) NSN	(4) CAGEC	(5) PART NUMBER	(6) DESCRIPTION AND USABLE ON CODES(UOC)	(7) QTY
					GROUP 2210 DATA PLATES AND INSTRUCTION HOLDERS FIG. 46 DATA PLATES	
1	PAOZZ	5320012821573	19207	12331207-3	RIVET,BLIND..... UOC:MEE,	6
1	PAOZZ	5320012821573	11815	BAPV-86	RIVET,BLIND..... UOC:JNH,	12
2	PAOZZ	9905012824656	19207	12353919	PLATE,IDENTIFICATIO..... UOC:MEE,	1
2	PFOZZ	9905014424906	19207	12368776	PLATE,IDENTIFICATIO VEHICLE IDENTIFICATION..... UOC:JNH,	1
3	PFOZZ	9905014424301	19207	12377987	PLATE,IDENTIFICATIO TRANSPORTABILITY..... UOC:JNH,	1
4	PAOZZ	5320010232529	81349	M24243/1-A404	RIVET,BLIND..... UOC:JNH,	4
5	PAOZZ	9905012073508	19207	12331218	PLATE,INSTRUCTION DOOR OPERATIONS..	1
6	PFOZZ	9905014426035	19207	12368604	PLATE,IDENTIFICATIO ELECTRICAL SWITCH CAPACITY..... UOC:JNH,	1
7	PFOZZ	9905014424907	19207	12368600	PLATE,IDENTIFICATIO ELECTRICAL OUTLET CAPACITY..... UOC:JNH,	1

END OF FIGURE

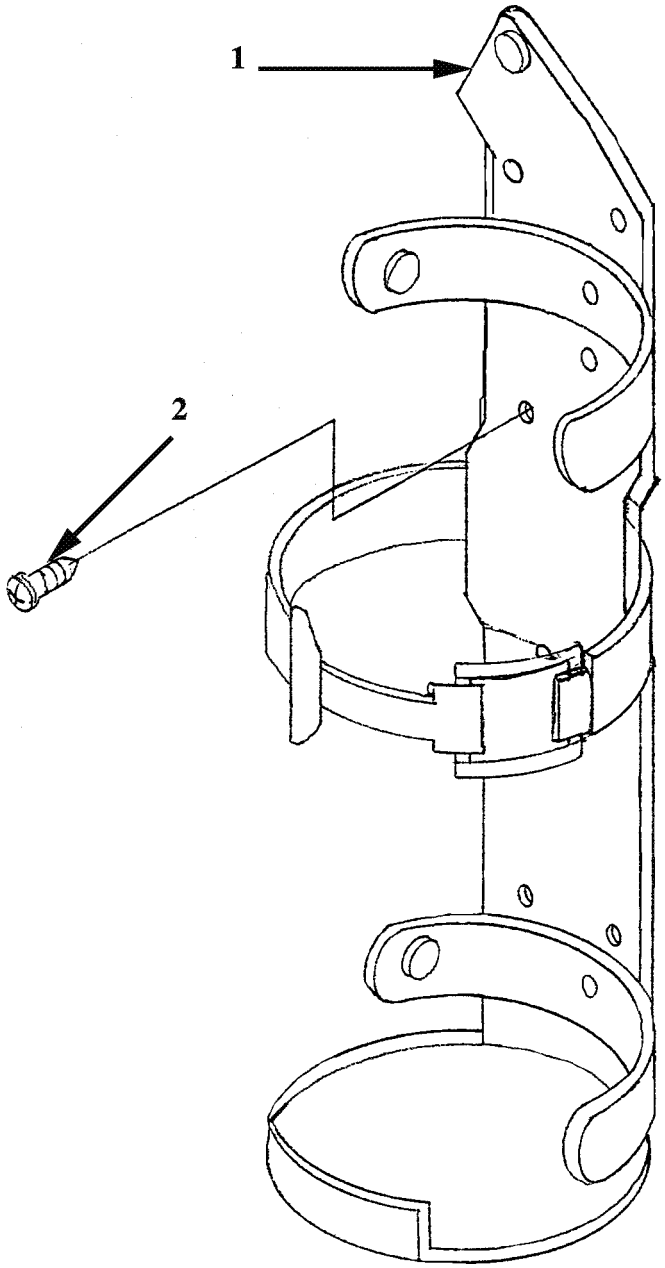

Figure 47. M129A4 Fire Extinguisher Bracket

(1) ITEM NO	(2) SMR CODE	(3) NSN	(4) CAGEC	(5) PART NUMBER	(6) DESCRIPTION AND USABLE ON CODES(UOC)	(7) QTY
					GROUP 76 FIRE FIGHTING EQUIPMENT COMPONENTS GROUP 7638 PORTABLE FIRE FIGHTING EQUIPMENT FIG. 47 M129A4 FIRE EXTINGUISHER BRACKET	
1	PAOZZ	4210011646897	54905	02909	BRACKET,FIRE EXTING..... UOC:JNH,	2
2	PAOZZ	5305004324205	96906	MS51861-49	SCREW,TAPPING 3/16 DIA X PAN X 1 INCH LONG..... UOC:JNH,	8

END OF FIGURE

(1) ITEM NO	(2) SMR CODE	(3) NSN	(4) CAGEC	(5) PART NUMBER	(6) DESCRIPTION AND USABLE ON CODES(UOC)	(7) QTY
					GROUP 95 GENERAL USE STANDARDIZED PARTS GROUP 9501 HARDWARE SUPPLIES AND BULK MATERIEL, COMMON FIG. BULK (ITEMS NOT ILLUSTRATED)	
1	PAOZZ	4010002289974	19207	12353862	CHAIN,WELDLESS 0.135 INCH NOM DIA.. UOC:JNH,	1
2	PAOZZ	4010011451652	83205	2109976	CHAIN,WELDED 0.281 INCH NOM DIA.... UOC:JNH,	1
3	PAOZZ	4010002289976	19203	836836	CHAIN,WELDLESS 0.080 INCH DIA..... UOC:JNH,	1
4	PAOZZ	4720010036706	13174	C608-100BLK	HOSE,NONMETALLIC.....	1
5	PAOZZ	4720010144915	81343	J844TYBSIZE 3/8 BLACK	HOSE,NONMETALLIC..... UOC:JNH,	1
6	PAOZZ	4720010144915	06853	246115	HOSE,NONMETALLIC..... UOC:MEE,	1
7	PAOZZ	5970010852844	81349	M23053/1-207-0	INSULATION SLEEVING..... UOC:JNH,	1
8	PAOZZ	5970000631495	81349	M23053/1-103-0	INSULATION SLEEVING..... UOC:JNH,	1
9	PAOZZ		19207	12360743	JUNCTION BOX..... UOC:JNH,	1
10	PAOZZ	9390011568094	19207	12315658	NONMETALLIC CHANNEL.....	1
11	PAOZZ	5530001285531	81348	NN-P-530	PLYWOOD,SOFTWOOD,CO..... UOC:JNH,	1
12	PAOZZ	5365012198959	19207	12331243-3	SPACER,SLEEVE..... UOC:JNH,	1
13	PAOZZ	6145001526499	81349	M13486-1-5	WIRE,ELECTRICAL SEE APPENDIX G, 14 AWG..... UOC:JNH,	1
14	PAOZZ	6145007056678	81349	M13486-1-7	WIRE,ELECTRICAL SEE APPENDIX G, 12 AWG..... UOC:JNH,	1
15	PAOZZ	6145009504922	81343	SAEJ1128TYGPT-14 AWG-GREEN	WIRE,ELECTRICAL SEE APPENDIX G..... UOC:MEE,	1
16	PAOZZ	6145003102590	64488	81141S	WIRE,ELECTRICAL SEE APPENDIX G..... UOC:MEE,	1
17	PAOZZ	6145012301863	64488	81146S	WIRE,ELECTRICAL SEE APPENDIX G..... UOC:MEE,	1
18	PAOZZ	6145012302516	64488	81147S	WIRE,ELECTRICAL SEE APPENDIX G..... UOC:MEE,	1
19	PAOZZ	6145011655632	79550	570D-4	WIRE,ELECTRICAL SEE APPENDIX G..... UOC:MEE,	1
20	PAOZZ	6145003102598	64488	81143S	WIRE,ELECTRICAL SEE APPENDIX G..... UOC:MEE,	1
21	PAOZZ	6145013419591	81349	M13486/1-4	WIRE,ELECTRICAL..... UOC:JNH,	1

END OF FIGURE

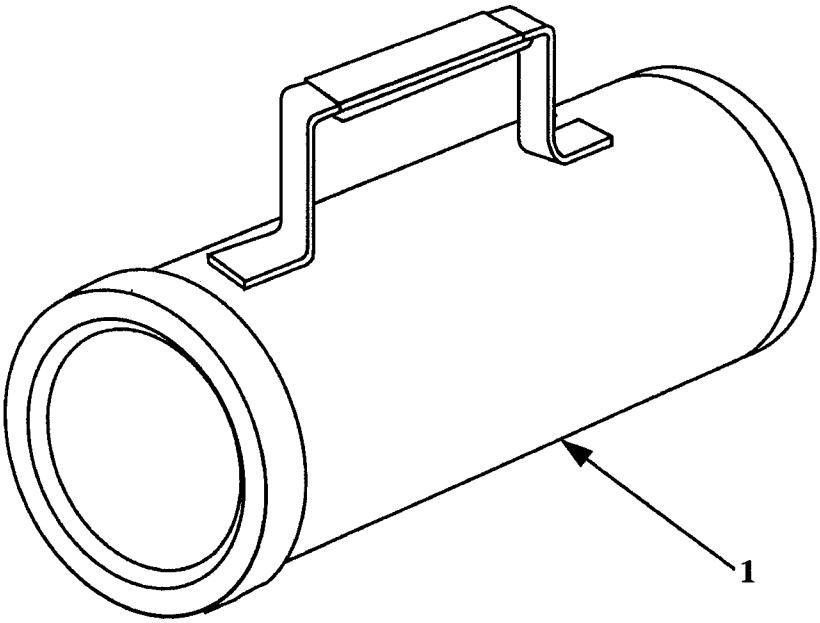

Figure 48. Special Tools

(1) ITEM NO	(2) SMR CODE	(3) NSN	(4) CAGEC	(5) PART NUMBER	(6) DESCRIPTION AND USABLE ON CODES(UOC)	(7) QTY
					GROUP 26 TOOLS AND TEST EQUIPMENT GROUP 2604 SPECIAL TOOLS FIG. 48 SPECIAL TOOLS	
1	PAOZZ		26151	015525236	TOOL,INSTALLER GRAVEL GUARD INSTALLATION..... UOC:JNH,	1

END OF FIGURE

NATIONAL STOCK NUMBER INDEX

NATIONAL STOCK NUMBER INDEX

STOCK NUMBER	FIG.	ITEM	STOCK NUMBER	FIG.	ITEM
5305-00-224-0147	44	5		20	12
5305-00-225-3843	32	20	6145-00-310-2590	BULK	16
5310-00-225-5328	3	13	6145-00-310-2598	BULK	20
5310-00-225-6408	37	19	5310-00-350-5550	19	12
5310-00-225-6993	32	6		20	11
5306-00-225-8498	19	3	2530-00-359-1162	29	17
5306-00-225-8499	41	1	5310-00-393-6685	18	9
5306-00-226-4825	4	3	5940-00-399-6676	9	5
	29	5	5940-00-407-2125	4	13
5306-00-226-4825	30	14	5310-00-407-9566	1	15
4010-00-228-9974	BULK	1		4	9
4010-00-228-9976	BULK	3		19	10
5315-00-234-1664	33	12		29	6
5315-00-236-8359	27	6		30	15
5310-00-241-0157	23	14		32	2
5930-00-246-9322	5	11		38	11
5310-00-250-9477	3	8		40	4
5310-00-252-5868	41	5		40	24
4730-00-253-4413	24	1		41	3
2610-00-260-7345	31	2	5305-00-432-4172	32	26
5305-00-269-3211	28	7	5305-00-432-4205	6	10
	41	12		7	12
5305-00-269-3234	38	21		47	2
	40	15	5305-00-432-4252	45	4
5305-00-269-3244	34	12	5305-00-432-4253	6	4
	35	22	5305-00-432-4254	44	6
	36	11	5305-00-432-8220	5	14
5310-00-269-4040	27	7	5935-00-480-3908	5	15
5325-00-276-6040	23	18	5940-00-534-0991	18	14
5325-00-276-6098	12	4	6210-00-548-0222	11	1
	24	3	5310-00-550-1130	11	4
5325-00-276-6228	1	5	2640-00-555-2824	31	3
	3	18	5940-00-557-2343	18	3
4730-00-278-3912	25	4	4730-00-564-9527	24	7
	27	11	5935-00-572-9180	9	1
5325-00-282-0748	20	7	5310-00-576-5752	2	5
3110-00-293-8997	29	11	6145-00-578-7521	6	14
3110-00-293-8998	29	18	5310-00-582-5965	1	1
	30	5		1	11
6250-00-299-2884	11	5		3	21
3120-00-304-9074	19	15		4	7

NATIONAL STOCK NUMBER INDEX

STOCK NUMBER	FIG.	ITEM
	4	20
	30	16
	33	10
	39	4
5310-00-582-6714	23	13
5310-00-584-5272	33	1
	43	2
5310-00-584-7888	35	12
5310-00-594-8038	33	5
5310-00-599-0070	4	18
3110-00-618-0248	29	16
	30	3
3110-00-618-0249	29	14
5331-00-618-5902	40	29
5310-00-619-1148	3	15
5331-00-641-0231	40	29
5930-00-660-5584	5	9
4730-00-678-4749	28	10
2530-00-693-1029	29	17
5305-00-702-4523	3	2
6145-00-705-6678	BULK	14
5365-00-717-5617	41	11
5305-00-719-3997	3	4
5305-00-719-5275	33	3
5305-00-723-9386	38	30
	39	17
5305-00-724-5910	34	1
	35	1
	36	1
	42	6
5305-00-724-5911	35	9
5305-00-724-7222	37	24
5305-00-726-2551	37	24
5305-00-726-2555	37	2
4730-00-729-7087	23	9
5310-00-732-0558	33	20
	41	8
5310-00-732-0560	33	2
5315-00-732-5974	40	27
9905-00-752-4649	18	4
	18	10
5310-00-761-6882	4	8
	30	17
	33	11
	39	3
5305-00-762-6041	41	12
	41	13
5310-00-763-8904	37	27
5310-00-763-8905	27	3
5310-00-763-8920	34	3
	35	3
	36	3
	42	4
5310-00-763-8921	35	11
5340-00-764-7051	23	8
	24	5
5310-00-768-0318	43	1
5935-00-773-1428	1	9
	3	3
	4	4
5305-00-781-7245	38	34
	39	21
5310-00-784-8142	37	20
5325-00-803-7299	19	4
5310-00-809-4058	32	11
	44	7
5310-00-809-5998	32	7
	38	31
	39	18
5310-00-809-8533	37	25
	41	14
5310-00-809-8541	33	21
5310-00-811-3494	4	17
5306-00-816-2441	38	27
	39	14
4730-00-817-6578	28	3
5310-00-820-6653	27	12
	34	2
	35	2
	36	2
	37	26
	42	5

NATIONAL STOCK NUMBER INDEX

STOCK NUMBER	FIG.	ITEM
5310-00-823-8803	27	8
5340-00-827-2453	13	7
5310-00-829-9981	1	16
5310-00-832-9719	37	15
5935-00-833-8561	9	4
5970-00-833-8562	9	6
5310-00-833-8567	9	2
5905-00-845-9470	2	13
5935-00-846-3883	2	2
	18	7
4820-00-849-1220	28	4
5305-00-855-0958	1	7
	13	1
	23	7
	24	6
	38	2
5305-00-855-0960	39	30
5305-00-855-0964	8	3
	12	1
	13	5
	45	4
5310-00-877-5797	2	12
4730-00-878-4199	23	10
5310-00-880-2004	29	3
5310-00-880-2005	29	3
5310-00-880-7744	4	10
2540-00-897-5917	41	10
5925-00-900-1903	3	9
4030-00-916-2141	36	10
5310-00-933-8121	3	6
5310-00-934-9751	2	4
5310-00-934-9757	9	10
5310-00-934-9758	2	6
	32	15
5310-00-934-9759	3	10
5310-00-934-9760	3	14
5310-00-937-5950	41	4
5305-00-939-0658	38	18
	40	11
5305-00-939-9204	35	10
5305-00-940-8069	37	13
6145-00-950-4922	BULK	15
5305-00-957-1497	39	24
5305-00-958-0671	2	11
5305-00-958-5246	39	1
5305-00-958-5247	39	7
5305-00-958-5469	29	9
5310-00-959-1488	34	14
	35	23
	36	13
	38	35
	39	22
5305-00-978-9380	40	23
5930-00-981-5886	5	10
5310-00-982-6810	41	15
5310-00-984-3806	19	11
	32	9
	38	12
	40	5
5305-00-984-4983	32	17
5305-00-984-5676	1	14
5305-00-984-6209	4	12
5305-00-984-6212	2	8
5305-00-984-7343	39	26
5305-00-988-1725	1	10
5340-00-988-3186	7	7
5305-00-993-1851	39	25
5310-00-997-1888	1	12
4720-01-003-6706	BULK	4
5310-01-004-6946	27	13
4720-01-014-4915	BULK	5
	BULK	6
5320-01-015-6896	6	5
5320-01-023-2529	46	4
5305-01-032-2312	32	10
5342-01-034-3072	38	4
5310-01-038-9577	32	1
5310-01-043-0596	29	19
	30	7
2610-01-045-3688	31	1
5310-01-049-9051	30	9
5975-01-064-6415	5	12

NATIONAL STOCK NUMBER INDEX

STOCK NUMBER	FIG.	ITEM
5330-01-067-3440	20	10
4010-01-074-5029	33	8
5306-01-075-8519	32	4
	41	2
5970-01-085-2844	BULK	7
5342-01-087-6921	32	8
6220-01-088-5915	9	8
4730-01-091-8032	24	9
4730-01-096-9128	23	5
	24	4
5306-01-098-7197	37	18
5310-01-098-7236	37	11
5310-01-098-7246	37	10
5310-01-098-7247	37	7
2590-01-100-9001	37	22
2510-01-100-9270	37	17
2510-01-100-9271	37	16
2520-01-101-0935	37	6
2520-01-101-2551	37	9
2510-01-101-2559	37	4
2510-01-101-2890	37	21
5935-01-107-9924	5	7
	6	13
5975-01-111-2203	5	8
	6	12
5935-01-111-9474	14	4
4730-01-115-6643	25	3
5315-01-137-3819	34	9
	36	8
4730-01-138-0907	23	2
5340-01-138-7153	40	30
5340-01-138-7195	34	11
	36	14
2510-01-138-9158	37	23
5340-01-139-9679	38	16
	40	9
5330-01-140-2424	38	6
	39	11
4710-01-140-6473	37	12
2590-01-140-8208	23	4
2510-01-141-5297	37	14
4730-01-141-9268	23	3
4010-01-145-1652	BULK	2
5340-01-145-6829	32	16
5940-01-147-3415	18	11
5320-01-150-9681	40	20
2540-01-152-1056	40	25
5325-01-152-2378	38	10
	40	3
5340-01-152-8882	38	19
	40	12
9390-01-156-8094	BULK	10
2540-01-157-8833	42	8
5330-01-160-4343	19	7
4210-01-164-6897	47	1
6145-01-165-5632	BULK	19
2530-01-173-8546	21	10
2530-01-179-9307	29	4
	30	18
4730-01-184-1683	23	16
	24	11
5340-01-184-4815	32	22
5315-01-186-4115	42	2
	42	13
2540-01-189-0454	40	7
2540-01-189-0455	38	14
	40	7
2540-01-193-1839	40	22
5340-01-203-0321	38	25
	40	19
5340-01-204-5674	38	23
	40	17
5340-01-206-7589	38	24
	40	18
9905-01-207-3508	46	5
5365-01-208-6216	40	21
5340-01-208-6814	39	5
5935-01-211-4434	1	13
	18	5
5925-01-214-3228	3	7
5365-01-215-3863	38	9
	40	2

NATIONAL STOCK NUMBER INDEX

STOCK NUMBER	FIG.	ITEM
3040-01-215-9950	38	13
5315-01-217-5316	40	13
5365-01-219-8959	BULK	12
5315-01-220-6245	21	7
5360-01-220-9373	21	6
5306-01-224-6887	38	8
	40	1
6145-01-230-1863	BULK	17
6145-01-230-2516	BULK	18
5365-01-230-3488	38	17
	40	10
5320-01-239-0880	21	11
5340-01-239-0883	21	4
5330-01-239-0885	19	13
5310-01-239-0893	29	21
	30	10
5360-01-241-6961	21	5
5925-01-247-5992	5	2
2530-01-253-1978	25	1
5330-01-254-8290	30	2
5330-01-255-0201	30	1
5340-01-264-0205	39	8
5331-01-264-6130	29	15
5340-01-273-8823	43	4
4730-01-274-1825	28	2
4730-01-274-1830	24	12
6145-01-276-7547	6	16
6150-01-280-4644	16	2
6150-01-280-4645	16	2
6150-01-280-4646	16	2
6150-01-280-4647	16	2
6150-01-280-9459	17	4
6150-01-280-9460	17	4
6150-01-280-9461	8	5
5905-01-280-9947	2	10
6150-01-281-2131	16	3
3040-01-281-5264	40	22
5306-01-281-7159	29	13
5340-01-281-7207	38	33
	39	19
3120-01-281-7211	37	8
3120-01-281-7212	19	2
	20	2
5342-01-281-7251	34	5
5315-01-281-7905	38	32
	39	20
5315-01-281-7906	32	25
	42	13
4730-01-281-8042	23	11
	24	8
6150-01-281-8824	17	2
5306-01-281-9191	37	3
4730-01-281-9372	23	6
3040-01-281-9706	43	6
3040-01-281-9722	38	15
	40	8
5306-01-282-0418	43	7
5306-01-282-0427	29	13
5310-01-282-0429	33	15
5340-01-282-0961	1	8
	2	1
4030-01-282-0988	42	11
5365-01-282-1561	23	15
5320-01-282-1573	46	1
3120-01-282-1582	19	8
4730-01-282-1706	27	10
2530-01-282-2525	29	12
2540-01-282-2537	42	9
2530-01-282-2559	28	1
2510-01-282-2572	37	5
2530-01-282-2575	19	1
	29	8
5340-01-282-3436	2	9
5340-01-282-3576	34	4
5340-01-282-3577	34	4
5340-01-282-3930	27	4
2510-01-282-4194	42	7
9905-01-282-4656	46	2
4710-01-282-5025	37	12
2530-01-282-5188	21	1
2530-01-282-5190	29	10
2530-01-282-5191	19	16

NATIONAL STOCK NUMBER INDEX

STOCK NUMBER	FIG.	ITEM
	20	9
2530-01-282-5192	22	1
2530-01-282-5193	27	1
2530-01-282-5194	27	2
2530-01-282-5208	29	8
2590-01-282-6994	34	8
	36	5
3040-01-282-7002	19	9
3040-01-282-7003	19	6
5340-01-282-7663	10	1
5315-01-282-8268	21	3
4730-01-282-8505	12	2
	13	4
2590-01-282-8544	34	7
	36	4
2510-01-282-8569	45	5
2510-01-282-8570	33	6
2530-01-282-8620	19	16
	20	9
3040-01-282-8631	33	16
5365-01-282-9286	41	7
5315-01-282-9307	43	12
5940-01-283-0374	2	3
2530-01-283-0812	26	1
5330-01-283-1186	29	7
	30	19
4730-01-283-1876	25	2
4730-01-283-1877	28	12
2510-01-283-3791	36	7
5360-01-283-4341	21	2
6150-01-283-6934	14	5
6150-01-283-7869	8	4
5365-01-283-9258	33	17
5340-01-283-9296	43	8
2510-01-284-0978	34	6
2590-01-284-0979	36	6
6220-01-284-1880	10	2
2590-01-284-2163	33	4
6150-01-284-2735	14	7
6150-01-284-3917	14	6
5365-01-285-2064	29	20
	30	8
5305-01-285-8886	42	3
5315-01-285-8967	27	5
5905-01-286-0649	2	14
5340-01-286-6137	32	19
6150-01-286-7510	14	1
6220-01-287-5413	8	1
2530-01-288-8553	21	8
2510-01-289-8210	37	1
2510-01-290-5008	38	7
5340-01-291-2310	38	28
	39	15
5320-01-291-4535	38	36
	39	27
5340-01-296-8871	41	6
5340-01-297-4096	33	7
5310-01-300-1516	33	18
5975-01-308-5624	1	3
5310-01-312-4960	35	20
6145-01-341-9591	BULK	21
5320-01-349-0933	44	1
5340-01-412-9755	6	9
5975-01-413-8329	6	11
5340-01-424-8682	3	11
	4	14
5310-01-439-8921	30	11
5307-01-440-1364	30	20
5310-01-440-8710	39	22
5305-01-441-2145	39	21
5340-01-441-3507	32	23
5340-01-441-3615	35	4
5340-01-441-3617	35	13
	42	9
5340-01-441-3833	27	14
5340-01-441-3834	20	8
5340-01-441-3842	35	4
5340-01-441-3846	32	24
5320-01-441-5197	5	3
	7	6
	44	8
5365-01-441-5199	39	6

NATIONAL STOCK NUMBER INDEX

STOCK NUMBER	FIG.	ITEM	STOCK NUMBER	FIG.	ITEM
5310-01-441-5554	39	2			
4720-01-441-6746	24	17			
2590-01-441-6766	36	7			
2530-01-441-6782	20	4			
2530-01-441-7210	22	1			
6150-01-441-7827	17	4			
6150-01-441-7933	17	4			
6150-01-441-9347	18	6			
6150-01-441-9349	18	1			
6150-01-441-9353	16	2			
6150-01-441-9359	16	2			
2530-01-441-9700	30	21			
5975-01-442-0232	5	4			
	7	5			
5975-01-442-0234	5	6			
5920-01-442-0428	5	5			
5925-01-442-0429	5	5			
	6	18			
5925-01-442-0431	5	5			
6150-01-442-2046	17	1			
6150-01-442-2052	16	3			
6150-01-442-4025	16	2			
9905-01-442-4301	46	3			
9905-01-442-4906	46	2			
9905-01-442-4907	46	7			
9905-01-442-6035	46	6			
5305-01-443-8436	20	6			
5305-01-443-8437	20	6			
5320-01-445-8100	32	30			
4730-01-449-8032	23	2			
5910-01-449-8851	7	10			
5910-01-449-8852	7	8			
4140-01-449-8907	7	2			
2530-01-449-9474	30	4			
2530-01-449-9475	30	6			
2590-01-450-0304	30	12			
4140-01-450-3049	44	2			
6680-01-451-0112	30	13			

PART NUMBER INDEX

CAGEC	PART NUMBER	STOCK NUMBER	FIG.	ITEM
81834	01661592	6150-01-442-2052	16	3
54905	02909	4210-01-164-6897	47	1
81834	05200970	6150-01-442-2046	17	1
06853	065175	2530-01-441-7210	22	1
92967	10060-01	5306-01-098-7197	37	18
63576	101162	5307-01-440-1364	30	20
31435	10313-23	5325-00-282-0748	20	7
52304	10709	2530-00-693-1029	29	17
19207	10882200	2540-00-897-5917	41	10
19207	10937538	5935-01-107-9924	5	7
			6	13
19207	10944341	5365-00-717-5617	41	11
19207	10947533-3	5975-01-442-0234	5	6
19220	11-2525-50L	2540-01-189-0454	40	7
10125	110180X	2530-01-253-1978	25	1
19207	11681178	5342-01-034-3072	38	4
19207	11681409	5340-01-441-3617	35	13
			42	9
19207	11684306	2540-01-157-8833	42	8
19207	11684418-1		39	28
19207	11684418-2		39	29
19207	11684418-3		39	27
19207	11684611		32	21
19207	11684622	5342-01-087-6921	32	8
78500	1199J114C	2530-00-359-1162	29	17
19207	12258212	6220-01-088-5915	9	8
19207	12258212-9		9	7
19207	12307731	2540-01-152-1056	40	25
19207	12307741-2		40	28
19207	12307881	5340-01-184-4815	32	22
19207	12315278	4730-01-138-0907	23	2
19207	12315280	4730-01-141-9268	23	3
19207	12315340-2	5306-01-281-9191	37	3
19207	12315342-2	4710-01-282-5025	37	12
19207	12315349	2510-01-100-9271	37	16
19207	12315350	2510-01-138-9158	37	23
19207	12315351	2520-01-101-2551	37	9
19207	12315352	2520-01-101-0935	37	6
19207	12315353	2510-01-141-5297	37	14
19207	12315354	2590-01-100-9001	37	22
19207	12315441	2510-01-101-2890	37	21
19207	12315484-3	3040-01-186-7888	40	6
19207	12315484-8	3040-01-215-9950	38	13
19207	12315489-1	2540-01-189-0455	38	14
			40	7
19207	12315505	5340-01-282-3436	2	9
19207	12315506	5340-01-138-7195	34	11
19207	12315536	2590-01-140-8208	23	4
19207	12315541	5340-01-286-6137	32	19

PART NUMBER INDEX

CAGEC	PART NUMBER	STOCK NUMBER	FIG.	ITEM
19207	12315542-8	5320-01-291-4535	38	36
			39	27
19207	12315564	2510-01-100-9270	37	17
19207	12315569-1	3040-01-281-5264	40	22
19207	12315569-2	2540-01-193-1839	40	22
19207	12315571	5340-01-138-7153	40	30
19207	12315611-2	5315-01-137-3819	34	9
			36	8
50620	12315611-5	5315-01-281-7906	32	25
19207	12315611-5	5315-01-281-7906	42	13
19207	12315614	5310-01-098-7236	37	11
19207	12315617-1	5340-01-139-9679	38	16
			40	9
19207	12315618	5325-01-152-2378	38	10
			40	3
19207	12315633-1	5340-01-206-7589	38	24
			40	18
19207	12315633-2	5340-01-203-0321	38	25
			40	19
19207	12315644-3	5320-01-150-9681	40	20
19207	12315647	6150-01-441-9349	18	1
19207	12315647-48		18	2
19207	12315648	6150-01-441-9347	18	6
19207	12315648-1.5		18	12
19207	12315648-80		18	13
19207	12315649	5340-01-204-5674	38	23
			40	17
19207	12315658	9390-01-156-8094	BULK	10
19207	12315659	5330-01-140-2424	38	6
			39	11
19207	12315674	5340-01-152-8882	38	19
			40	12
19207	12330833-38	5365-01-282-9286	41	7
19207	12330842		40	26
19207	12330845	5365-01-230-3488	38	17
			40	10
			40	10
19207	12330884	5365-01-208-6216	40	21
19207	12330931	5340-01-208-6814	39	5
19207	12330932	5340-01-264-0205	39	8
19207	12331109-6	5320-01-445-8100	32	30
19207	12331207-3	5320-01-282-1573	46	1
19207	12331218	9905-01-207-3508	46	5
19207	12331240	5315-01-217-5316	40	13
19207	12331242	5306-01-224-6887	38	8
			40	1
19207	12331243-2	5365-01-215-3863	38	9
			40	2
19207	12331243-3	5365-01-219-8959	BULK	12

PART NUMBER INDEX

CAGEC	PART NUMBER	STOCK NUMBER	FIG.	ITEM
19207	12331243-4		40	2
19207	12353585-40		35	17
19207	12353858-2		32	28
19207	12353860-1		42	1
19207	12353862	4010-00-228-9974	BULK	1
19207	12353862-1		34	10
			36	9
19207	12353862-5		42	14
19207	12353862-6		42	10
19207	12353862-7		43	11
19207	12353862-8		36	9
19207	12353888	5340-01-273-8823	43	4
40670	12353895	4730-01-281-9372	23	6
19207	12353919	9905-01-282-4656	46	2
19207	12353952		42	16
19207	12353955	2540-01-282-2537	42	9
19207	12353958-1	2590-01-284-0979	36	6
19207	12353958-2	2510-01-284-0978	34	6
19207	12353958-3	5342-01-281-7251	34	5
19207	12353958-4	2510-01-283-3791	36	7
19207	12353958-6	2590-01-441-6766	36	7
19207	12353969-1		8	1
19207	12353969-2	6220-01-287-5413	8	1
19207	12353970	6150-01-283-7869	8	4
19207	12353971	5340-01-282-7663	10	1
19207	12353972	6220-01-284-1880	10	2
19207	12353974	6150-01-284-2735	14	7
19207	12353975	6150-01-284-3917	14	6
19207	12353976	6150-01-286-7510	14	1
19207	12353977	6150-01-283-6934	14	5
19207	12353997	2530-01-282-5193	27	1
19207	12354007	2530-01-282-5194	27	2
19207	12354010-1	5310-01-300-1516	33	18
19207	12354010-2	5310-01-282-0429	33	15
19207	12354015	6150-01-280-9461	8	5
19207	12354023-108		24	10
19207	12354023-300		24	2
19207	12354025	5340-01-282-0961	1	8
			2	1
19207	12354026	5975-01-308-5624	1	3
19207	12354046-1	4720-01-441-6746	24	17
19207	12354046-2		24	14
19207	12354046-3		24	15
19207	12354092	3120-01-281-7211	37	8
19207	12354101	2590-01-282-6994	34	8
			36	5
19207	12354102	2530-01-282-2559	28	1
19207	12354103	2530-01-282-8620	19	16
19207	12354104	2530-01-282-5191	19	16

PART NUMBER INDEX

CAGEC	PART NUMBER	STOCK NUMBER	FIG.	ITEM
97271	12354104	2530-01-282-5191	20	9
19207	12354105-1	3040-01-282-7002	19	9
19207	12354105-2	3040-01-282-7003	19	6
19207	12354107	4730-01-283-1877	28	12
19207	12354108-2		26	3
19207	12354109	3120-01-282-1582	19	8
19207	12354111	4730-01-283-1876	25	2
19207	12354113	5365-01-285-2064	29	20
			30	8
19207	12354125	2510-01-282-2572	37	5
19207	12354132-2		28	9
19207	12354138	4730-01-281-8042	23	11
			24	8
			24	8
19207	12354138-2		23	12
19207	12354140	2530-01-283-0812	26	1
19207	12354143	6150-01-281-8824	17	2
40670	12354144	4730-01-282-8505	12	2
81834	12354144		13	4
19207	12354148		29	1
19207	12354149-1		13	2
19207	12354149-2		13	3
19207	12354150	2530-01-282-5192	22	1
19207	12354151-1	5306-01-282-0427	29	13
19207	12354151-2	5306-01-281-7159	29	13
19207	12354152	5360-01-283-4341	21	2
19207	12354153-1		37	1
19207	12354153-2	2510-01-289-8210	37	1
19207	12354154-1		20	1
19207	12354155-1	2530-01-282-2576	29	8
19207	12354155-2	2530-01-282-5208	29	8
19207	12354156-1	2530-01-441-6782	20	4
19207	12354156-2	2530-01-282-2575	19	1
19207	12354157	2530-01-179-9307	29	4
			30	18
19207	12354158	5330-01-283-1186	29	7
			30	19
19207	12354160	3120-01-281-7212	19	2
			20	2
19207	12354163	2530-01-282-5188	21	1
19207	12354165	5315-01-282-8268	21	3
19207	12354166	2530-01-288-8553	21	8
19207	12354167		21	9
19207	12354173	2590-01-284-2163	33	4
19207	12354180		33	13
19207	12354182	2510-01-282-8570	33	6
19207	12354183	5340-01-297-4096	33	7
19207	12360336	5365-01-283-9258	33	17
19207	12360337	3040-01-282-8631	33	16

PART NUMBER INDEX

CAGEC	PART NUMBER	STOCK NUMBER	FIG.	ITEM
19207	12360339	2530-01-282-2525	29	12
19207	12360341		29	2
19207	12360342	2530-01-282-5190	29	10
19207	12360344	5340-01-282-3930	27	4
19207	12360345	5315-01-285-8967	27	5
40670	12360346	4730-00-278-3912	25	4
19207	12360347	4730-01-282-1706	27	10
19207	12360359	5365-01-282-1561	23	15
19207	12360360-1		2	26
19207	12360360-2		2	27
19207	12360360-3		2	25
19207	12360360-4		2	16
19207	12360360-5		2	15
19207	12360360-6		2	18
19207	12360360-7		2	17
19207	12360361-1		2	21
19207	12360361-2		2	23
19207	12360361-3		2	22
19207	12360361-4		2	24
19207	12360361-5		2	19
19207	12360361-6		2	20
19207	12360362		16	1
19207	12360363	5940-01-283-0374	2	3
19207	12360364		39	12
19207	12360366	5905-01-280-9947	2	10
19207	12360368	3040-01-281-9722	38	15
			40	8
19207	12360372	5340-01-291-2310	38	28
			39	15
19207	12360379	2510-01-290-5008	38	7
19207	12360381-1	6150-01-442-4025	16	2
19207	12360381-2	6150-01-441-9359	16	2
19207	12360381-3	6150-01-280-4644	16	2
19207	12360381-4	6150-01-280-4645	16	2
19207	12360381-5	6150-01-280-4646	16	2
19207	12360381-6	6150-01-280-4647	16	2
19207	12360381-8	6150-01-441-9353	16	2
19207	12360384-1	6150-01-280-9459	17	4
19207	12360384-2	6150-01-280-9460	17	4
19207	12360384-5	6150-01-441-7827	17	4
19207	12360384-6	6150-01-441-7933	17	4
19207	12360385-1	6150-01-281-2131	16	3
19207	12360386		45	5
19207	12360387		1	4
			3	19
			4	16
19207	12360388	2510-01-282-8569	45	5
19207	12360392-1	5340-01-282-3576	34	4
19207	12360392-2	5340-01-282-3577	34	4

PART NUMBER INDEX

CAGEC	PART NUMBER	STOCK NUMBER	FIG.	ITEM
19207	12360397	5315-01-281-7905	38	32
			39	20
19207	12360398	5340-01-281-7207	38	33
			39	19
19207	12360399		38	29
			39	16
19207	12360400	2510-01-282-4194	42	7
19207	12360410		43	3
19207	12360414	3040-01-281-9706	43	6
19207	12360415	5315-01-282-9307	43	12
19207	12360426	5340-01-283-9296	43	8
19207	12360427		39	23
19207	12360428-252		39	10
19207	12360467		39	12
19207	12360531	5340-01-296-8871	41	6
19207	12360611-40		35	16
19207	12360611-60		32	29
19207	12360612-1	5340-01-441-3507	32	23
19207	12360612-2	5340-01-441-3846	32	24
19207	12360616		32	13
19207	12360621		32	3
19207	12360743		BULK	9
19207	12360743-1		4	1
19207	12360743-2		3	17
			4	2
19207	12368448-1	5310-01-441-5554	39	2
19207	12368600	9905-01-442-4907	46	7
19207	12368604	9905-01-442-6035	46	6
19207	12368609		6	6
19207	12368613	5925-01-442-0431	5	5
19207	12368614	5925-01-442-0429	5	5
			6	18
19207	12368615	5925-01-442-0428	5	5
19207	12368743-1	5975-01-442-0232	5	4
			7	5
19207	12368757-1		23	21
19207	12368757-660		23	17
19207	12368758-34		13	6
19207	12368773	5365-01-441-5199	39	6
19207	12368776	9905-01-442-4906	46	2
19207	12377885	5340-01-441-3842	35	4
19207	12377886	5340-01-441-3615	35	4
19207	12377887		35	7
19207	12377889-1		35	15
19207	12377889-2		35	15
19207	12377890		35	14
19207	12377897		35	6
			36	6
19207	12377913		36	4

PART NUMBER INDEX

CAGEC	PART NUMBER	STOCK NUMBER	FIG.	ITEM
19207	12377952		35	5
19207	12377953		35	5
19207	12377966-1		20	5
19207	12377966-2		20	5
19207	12377968	5340-01-441-3834	20	8
19207	12377969-1	5305-01-443-8436	20	6
19207	12377969-2	5305-01-443-8437	20	6
19207	12377987	9905-01-442-4301	46	3
19207	12378017		5	1
74545	1282	5930-00-246-9322	5	11
93908	15005	5975-01-413-8329	6	11
98343	1512-0-4	5925-01-214-3228	3	7
10001	1561635	5310-00-784-8142	37	20
63576	179955	5310-01-439-8921	30	11
19207	192075	4730-00-196-1504	28	11
73992	2-H16	4730-01-184-1683	23	16
			24	11
18889	20231—0	2530-01-449-9474	30	4
81795	21008B	5310-00-594-8038	33	5
83205	2109976	4010-01-145-1652	BULK	2
80045	23MS35338-10	5310-00-584-5272	33	1
			43	2
06853	246115	4720-01-014-4915	BULK	6
77881	250-L	5975-01-064-6415	5	12
73195	28408	2530-01-441-9700	30	21
73992	2K16	4730-00-729-7087	23	9
			24	13
94231	3-07620-311	5310-00-004-5033	33	19
			38	20
			40	14
			41	9
4B100	30/30 CHAMBER 34 31232	5340-01-441-3833	27	14
13445	30056-15	5925-00-900-1903	3	9
70485	307W	5340-01-145-6829	32	16
26151	315-1504	5330-01-255-0201	30	1
26151	3202110	5330-01-254-8290	30	2
50620	38S	5315-01-186-4115	42	2
			42	13
2AA56	3TD100	5331-01-264-6130	29	15
0N972	441069	4730-01-449-8032	23	2
0N972	441070		23	3
21450	443990	4730-00-878-4199	23	10
89346	444624	4730-00-052-3666	28	8
79136	5100-150MD	5325-00-803-7299	19	4
19207	5331179	5310-00-241-0157	23	14
00843	5406-004		3	5
			4	6
79550	570D-4	6145-01-165-5632	BULK	19

PART NUMBER INDEX

CAGEC	PART NUMBER	STOCK NUMBER	FIG.	ITEM
19204	572929	5999-00-057-2929	9	3
81343	6-4 140140C	4730-00-278-3912	27	11
81343	6-4100102BA	4730-01-274-1830	24	12
81343	6-6 100202BA	4730-01-274-1825	28	2
81343	6-6-6140425C	4730-00-564-9527	24	7
26151	610-0065	2590-01-450-0304	30	12
26151	650-0620	6680-01-451-0112	30	13
18889	66884	2530-01-449-9475	30	6
93061	68NTA-6-6	4730-01-096-9128	23	5
			24	4
			24	4
93061	68NTA-8-6	4730-01-091-8032	24	9
71183	70530-MPI	5935-00-480-3908	5	15
19207	7521159	4010-01-074-5029	33	8
19207	7534868	5310-00-350-5550	19	12
			20	11
19207	7722333	5365-00-090-5426	18	8
19207	7723309	5310-00-393-6685	18	9
19207	7731428	5935-00-773-1428	1	9
			3	3
			4	4
71785	8-142	5940-00-407-2125	4	13
81343	8-8100202BA	4730-01-115-6643	25	3
64488	81141S	6145-00-310-2590	BULK	16
64488	81143S	6145-00-310-2598	BULK	20
64488	81146S	6145-01-230-1863	BULK	17
64488	81147S	6145-01-230-2516	BULK	18
19207	8338561	5935-00-833-8561	9	4
19207	8338562	5970-00-833-8562	9	6
19207	8338564	5940-00-399-6676	9	5
19207	8338566	5935-00-572-9180	9	1
19207	8338567	5310-00-833-8567	9	2
19203	836836	4010-00-228-9976	BULK	3
92967	837-00	5310-01-098-7246	37	10
19328	853145		6	17
19207	8713419	5306-00-017-9722	33	9
19207	8747064	4030-01-282-0988	42	11
92967	893-01	4710-01-140-6473	37	12
92967	895-00	5310-01-098-7247	37	7
92967	9640-00	2510-01-101-2559	37	4
39428	990053A197	5305-00-432-4172	32	26
70485	A12113	5325-00-276-6228	1	5
			3	18
98410	B-175	5940-01-147-3415	18	11
80204	B1821BH025C100N	5305-00-225-3843	32	20
80204	B1821BH025C125N	5305-00-068-0509	11	3
			32	12
80204	B1821BH025C400N	5305-00-071-2519	7	1
80204	B1821BH031C075N	5306-00-226-4825	4	3

PART NUMBER INDEX

CAGEC	PART NUMBER	STOCK NUMBER	FIG.	ITEM
			29	5
			30	14
80204	B1821BH038C125N	5305-00-068-0511	33	14
			35	19
80204	B1821BH038F075N	5305-00-269-3234	40	15
80204	B1821BH038F250N	5305-00-269-3244	35	22
80204	B1821BH050C600N	5305-01-032-2312	32	10
80204	B1821BH063C200N	5305-00-724-7222	37	24
80204	B1821BH063F200N	5305-00-726-2551	37	24
80204	B1821BH075F250N	5305-00-762-6041	41	13
80204	B1821BH075F450N	5305-00-940-8069	37	13
11815	BAPV-64	5320-01-349-0933	44	1
11815	BAPV-86	5320-01-282-1573	46	1
79470	C3159X12	4730-00-678-4749	28	10
13174	C608-100BLK	4720-01-003-6706	BULK	4
19207	CPR104420-2-1	4720-01-014-4915	13	6
19207	CPR104420-2-25	4720-01-014-4915	24	2
19207	CPR104420-2-55	4720-01-014-4915	23	17
19207	CPR104420-3-9		24	10
84290	D613-40004	2530-01-282-2559	28	1
46564	DT 338		3	1
93908	E942D		6	2
93908	E977DC	5340-01-412-9755	6	9
93908	E980DFN		6	7
93908	E981DFN		6	8
08108	F20T12/CW	6240-00-152-2996	11	2
81348	FF-S-107		5	13
91595	FS2	6250-00-299-2884	11	5
79725	G-3046BE	5975-01-111-2203	5	8
			6	12
62292	G4E180-AB09-15	4140-01-449-8907	7	2
81348	GP3STYLXTYBBCLR/ T/10.00-20/F/TBH	2610-00-204-4026	31	1
81348	GP3STYLXTYRACLR/ T/11.00R22.50G	2610-01-045-3688	31	1
81348	GROUP2/10.00-20/ TR444/TR464/ONCT	2610-00-260-7345	31	2
60038	HM212011	3110-00-293-8997	29	11
60038	HM212049	3110-00-293-8998	29	18
			30	5
60038	HM218210	3110-00-618-0249	29	14
60038	HM218248	3110-00-618-0248	29	16
			30	3
81343	J844TYBSIZE 3/8 BLACK	4720-01-014-4915	BULK	5
26697	JP0-0031	5935-01-211-4434	1	13
			18	5
74410	JS-S02818	2590-01-282-8544	34	7
			36	4

PART NUMBER INDEX

CAGEC	PART NUMBER	STOCK NUMBER	FIG.	ITEM
63576	KTS-1769	4140-01-450-3049	44	2
63576	KTS-1811	5910-01-449-8852	7	8
63576	KTS-1812	5910-01-449-8851	7	10
93908	LT43DN		6	1
62707	M10HH129	5330-01-067-3440	20	10
62707	M10HM100	5320-01-239-0880	21	11
62707	M10HN101	5310-01-043-0596	29	19
			30	7
62707	M10HN102	5310-01-239-0893	29	21
			30	10
62707	M10HN151	5310-01-049-9051	30	9
81349	M13486-1-5	6145-00-152-6499	BULK	13
81349	M13486-1-5-A/R		7	14
81349	M13486-1-7	6145-00-705-6678	BULK	14
81349	M13486/1-4	6145-01-341-9591	BULK	21
63576	M158-2A		8	6
63576	M158-2R		8	6
81349	M16377/12-333.1	6210-00-548-0222	11	1
62707	M16HD100	3120-00-304-9074	19	15
			20	12
62707	M16HH100	5330-01-239-0885	19	13
62707	M16WJ100	5360-01-241-6961	21	5
62707	M16WJ102	5340-01-239-0883	21	4
62707	M16WJ103	5360-01-220-9373	21	6
62707	M16WJ104	5315-01-220-6245	21	7
3Z946	M16WK105-26	2530-01-282-8620	20	9
62707	M16WL100	2530-01-173-8546	21	10
81349	M23053/1-103-0	5970-00-063-1495	BULK	8
81349	M23053/1-207-0	5970-01-085-2844	BULK	7
81349	M24243/1-A404	5320-01-023-2529	46	4
81349	M24243/1-B404	5320-01-015-6896	6	5
63576	M423R		10	3
81349	M43436/1-1	9905-00-752-4649	18	4
			18	10
81349	M5086/1-12-0	6145-00-044-3579	6	15
81349	M5086/1-12-5	6145-01-276-7547	6	16
81349	M5086/1-12-9	6145-00-578-7521	6	14
81349	M83461/1-325	5330-01-160-4343	19	7
63576	MS10-7066-00		15	3
63576	MS10-7067-00		15	2
96906	MS14315-4	4730-00-817-6578	28	3
96906	MS15001-1	4730-00-050-4203	19	5
			22	2
			43	5
			43	5
96906	MS15003-4	4730-00-172-0028	19	14
			20	3
96906	MS15571-8	6240-00-155-7859	8	2
96906	MS15795-808	5310-00-619-1148	3	15

PART NUMBER INDEX

CAGEC	PART NUMBER	STOCK NUMBER	FIG.	ITEM
96906	MS15795-841	5310-00-225-5328	3	13
96906	MS16997-61	5305-00-978-9380	40	23
96906	MS16997-64	5305-00-978-9382	40	23
96906	MS17828-10C	5310-01-004-6946	27	13
96906	MS17830-6C	5310-00-050-6646	38	26
			39	13
96906	MS20659-105	5940-00-114-1300	14	2
			17	3
63576	MS21-5028-00		15	1
80205	MS21044N08	5310-00-811-3494	4	17
96906	MS21044N12	5310-00-982-6810	41	15
96906	MS21044N3	5310-00-877-5797	2	12
80205	MS21044N5	5310-00-088-0553	4	11
96906	MS21044N5		43	9
96906	MS21333-17	5340-00-053-8376	7	11
96906	MS21333-19	5340-00-988-3186	7	7
96906	MS21333-69	5340-00-764-7051	23	8
			24	5
96906	MS21333-73	5340-00-057-2906	12	3
			13	8
			13	8
			24	16
96906	MS24621-60	5305-00-067-9900	8	7
			10	4
96906	MS24627-49	5305-00-052-6872	42	12
96906	MS24627-64	5305-00-003-6769	39	1
96906	MS24629-36	5305-00-855-0960	39	30
96906	MS24629-45	5305-00-855-0958	1	7
			13	1
			13	1
			23	7
			24	6
			24	6
			38	2
96906	MS24629-48	5305-00-855-0964	8	3
			12	1
			13	5
			13	5
			45	4
96906	MS24629-50	5305-00-052-6917	38	3
96906	MS24629-57	5305-00-052-6921	1	2
			3	20
			4	19
			42	15
			43	10
			43	10
96906	MS24629-59	5305-00-052-6923	45	3
96906	MS24629-61	5305-00-052-7492	23	1
96906	MS24665-370	5315-00-236-8359	27	6

PART NUMBER INDEX

CAGEC	PART NUMBER	STOCK NUMBER	FIG.	ITEM
96906	MS24665-495	5315-00-234-1664	33	12
96906	MS27130-107		39	9
96906	MS27130-S47	5310-01-038-9577	32	1
96906	MS27142-1	5935-01-111-9474	14	4
16528	MS27143-1	5935-00-114-0607	14	3
96906	MS27183-10	5310-00-809-4058	32	11
			44	7
96906	MS27183-12	5310-00-081-4219	32	5
96906	MS27183-13	5310-00-087-7493	34	13
			36	12
			39	31
96906	MS27183-14	5310-00-080-6004	28	6
			35	8
96906	MS27183-18	5310-00-809-5998	32	7
			38	31
			39	18
96906	MS27183-21	5310-00-823-8803	27	8
96906	MS27183-23	5310-00-809-8533	37	25
			41	14
96906	MS27183-27	5310-00-809-8541	33	21
96906	MS27183-42	5310-00-014-5850	32	18
96906	MS27183-55	5310-01-312-4960	35	20
96906	MS28775-122	5331-00-618-5902	40	29
96906	MS28775-216	5331-00-641-0231	40	29
63576	MS30-1145-00		15	4
63576	MS30-1146-00		15	5
96906	MS35150-5	5340-00-827-2453	13	7
96906	MS35190-289	5305-00-958-5246	39	1
96906	MS35190-291	5305-00-958-5247	39	7
96906	MS35190-305	5305-00-958-5469	29	9
96906	MS35191-276	5305-00-984-7343	39	26
96906	MS35191-293	5305-00-957-1497	39	24
96906	MS35191-323	5305-00-781-7245	38	34
			39	21
96906	MS35191-329	5305-01-441-2145	39	21
96906	MS35206-226	5305-00-984-4983	32	17
96906	MS35206-262	5305-00-984-6209	4	12
96906	MS35206-265	5305-00-984-6212	2	8
96906	MS35206-281	5305-00-988-1725	1	10
96906	MS35206-296	5305-00-984-5676	1	14
96906	MS35207-267	5305-00-993-1851	39	25
96906	MS35207-274	5305-00-958-0671	2	11
96906	MS35307-303	5305-00-719-3997	3	4
96906	MS35307-306	5305-00-702-4523	3	2
96906	MS35333-38	5310-00-599-0070	4	18
96906	MS35333-39	5310-00-576-5752	2	5
96906	MS35333-40	5310-00-550-1130	11	4
96906	MS35333-49	5310-00-582-6714	23	13
96906	MS35338-139	5310-00-933-8121	3	6

PART NUMBER INDEX

CAGEC	PART NUMBER	STOCK NUMBER	FIG.	ITEM
96906	MS35338-42	5310-00-045-3299	9	9
96906	MS35338-43	5310-00-045-3296	1	6
			2	7
			38	1
96906	MS35338-44	5310-00-582-5965	1	1
			1	11
			3	21
			4	7
			4	20
			30	16
			33	10
			39	4
96906	MS35338-45	5310-00-407-9566	1	15
			4	9
			19	10
			29	6
			30	15
			32	2
			38	11
			40	4
			40	24
			41	3
96906	MS35338-50	5310-00-820-6653	27	12
			34	2
			35	2
			36	2
			36	2
			37	26
			42	5
96906	MS35338-51	5310-00-584-7888	35	12
96906	MS35387-1	9905-00-205-2795	45	1
96906	MS35387-2	9905-00-202-3639	45	2
96906	MS35436-11	5940-00-557-2343	18	3
96906	MS35436-6	5940-00-534-0991	18	14
96906	MS35489-40	5325-00-185-0004	23	19
96906	MS35489-46	5325-00-185-0001	4	15
			13	9
			13	9
96906	MS35489-78	5325-00-276-6098	12	4
			24	3
96906	MS35489-98	5325-00-276-6040	23	18
96906	MS35492-30	5305-00-224-0147	44	5
96906	MS35649-202	5310-00-934-9758	2	6
			32	15
96906	MS35649-204	5310-00-934-9760	3	14
36378	MS35649-2252	5310-00-997-1888	1	12
96906	MS35649-2254	5310-00-250-9477	3	8
96906	MS35649-2312	5310-00-829-9981	1	16
96906	MS35649-282	5310-00-934-9757	9	10

PART NUMBER INDEX

CAGEC	PART NUMBER	STOCK NUMBER	FIG.	ITEM
96906	MS35649-284	5310-00-934-9759	3	10
96906	MS35650-302	5310-00-934-9751	2	4
96906	MS35748-1	5330-00-090-2128	23	20
96906	MS35751-71	5306-00-816-2441	38	27
			39	14
96906	MS35751-79	5306-00-089-1421	39	14
96906	MS35782-5	4820-00-849-1220	28	4
96906	MS39086-164	5315-00-732-5974	40	27
96906	MS39230-3	4730-00-253-4413	24	1
96906	MS51106-340	5306-01-282-0418	43	7
96906	MS51359-4	2640-00-052-0875	31	4
96906	MS51861-49	5305-00-432-4205	6	10
			7	12
			47	2
96906	MS51861-66	5305-00-432-4252	45	4
96906	MS51861-67	5305-00-432-4253	6	4
96906	MS51861-69	5305-00-432-4254	44	6
96906	MS51862-35	5305-00-432-8220	5	14
96906	MS51922-1	5310-00-088-1251	7	4
			32	14
96906	MS51922-17	5310-00-087-4652	28	5
			35	21
			39	13
96906	MS51922-21	5310-00-959-1488	34	14
			35	23
			36	13
			38	35
			39	22
96906	MS51922-24	5310-01-440-8710	39	22
96906	MS51922-33	5310-00-225-6993	32	6
96906	MS51922-49	5310-00-269-4040	27	7
96906	MS51922-53	5310-00-225-6408	37	19
96906	MS51922-61	5310-00-832-9719	37	15
96906	MS51922-9	5310-00-984-3806	19	11
			32	9
			38	12
			40	5
96906	MS51957-42	5305-00-054-6667	3	12
96906	MS51957-67	5305-00-050-9233	3	16
96906	MS51963-64	5305-00-723-9386	38	30
			39	17
96906	MS51967-14	5310-00-768-0318	43	1
96906	MS51967-2	5310-00-761-6882	4	8
			30	17
			33	11
		5310-00-761-6882	39	3
96906	MS51967-20	5310-00-763-8920	34	3
			35	3
			36	3

PART NUMBER INDEX

CAGEC	PART NUMBER	STOCK NUMBER	FIG.	ITEM
			36	3
			42	4
96906	MS51967-23	5310-00-763-8921	35	11
96906	MS51967-5	5310-00-880-7744	4	10
96906	MS51967-8	5310-00-732-0558	33	20
			41	8
96906	MS51968-14	5310-00-732-0560	33	2
96906	MS51968-20	5310-00-763-8905	27	3
96906	MS51968-21	5310-00-763-8904	37	27
96906	MS51975-18	5305-00-939-0658	38	18
			40	11
			40	11
96906	MS51983-3	5310-00-880-2004	29	3
96906	MS51983-4	5310-00-880-2005	29	3
96906	MS75021-1	5935-00-846-3883	2	2
			18	7
96906	MS87006-53	4030-00-916-2141	36	10
96906	MS87008-1	4010-00-191-0091	32	27
96906	MS90725-162	5305-00-724-5910	34	1
			35	1
			36	1
			36	1
			42	6
96906	MS90725-163	5305-00-724-5911	35	9
96906	MS90725-187	5305-00-939-9204	35	10
96906	MS90725-33	5306-00-225-8498	19	3
96906	MS90725-34	5306-00-225-8499	41	1
96906	MS90725-36	5306-01-075-8519	32	4
			41	2
96906	MS90725-6	5305-00-068-0502	4	5
			38	22
			40	16
96906	MS90725-60	5305-00-269-3211	28	7
			41	12
96906	MS90727-128	5305-00-719-5275	33	3
96906	MS90727-168	5305-00-726-2555	37	2
96906	MS90727-189	5305-00-762-6041	41	12
96906	MS90727-250	5305-01-285-8886	42	3
96906	MS90727-58	5305-00-269-3234	38	21
96906	MS90727-68	5305-00-269-3244	34	12
			36	11
81348	NN-P-530	5530-00-128-5531	BULK	11
93908	PVC,SCHEDULE 40,		6	3
14280	Q06-12L100S	5925-01-247-5992	5	2
98996	RV6606-8-6W	5320-01-441-5197	5	3
			7	6
			44	8
81349	RW22-V4R5	5905-00-845-9470	2	13
81348	RW22V6R0	5905-01-286-0649	2	14

PART NUMBER INDEX

CAGEC	PART NUMBER	STOCK NUMBER	FIG.	ITEM
83187	S31B256	5310-00-937-5950	41	4
03481	S31B406	5310-00-252-5868	41	5
81343	SAEJ1128TYGPT-14 AWG-GREEN	6145-00-950-4922	BULK	15
80063	SMD379338-3	5930-00-981-5886	5	10
19207	TBD-01		7	13
19207	TBD-02		7	9
27783	TR573	2640-00-555-2824	31	3
81348	WS896/2-02A	5930-00-660-5584	5	9
81348	WW-P-471AASBCC	4730-00-187-4202	26	2
81348	WW-P-471ACBBUE	4730-00-010-3875	27	9
00843	Z-L18	5340-01-424-8682	3	11
			4	14
81348	ZZ-V-25/TYPE IV/ CLASS1/TR-VC-2	2640-00-060-3550	31	5

APPENDIX G
ILLUSTRATED LIST OF MANUFACTURED ITEMS

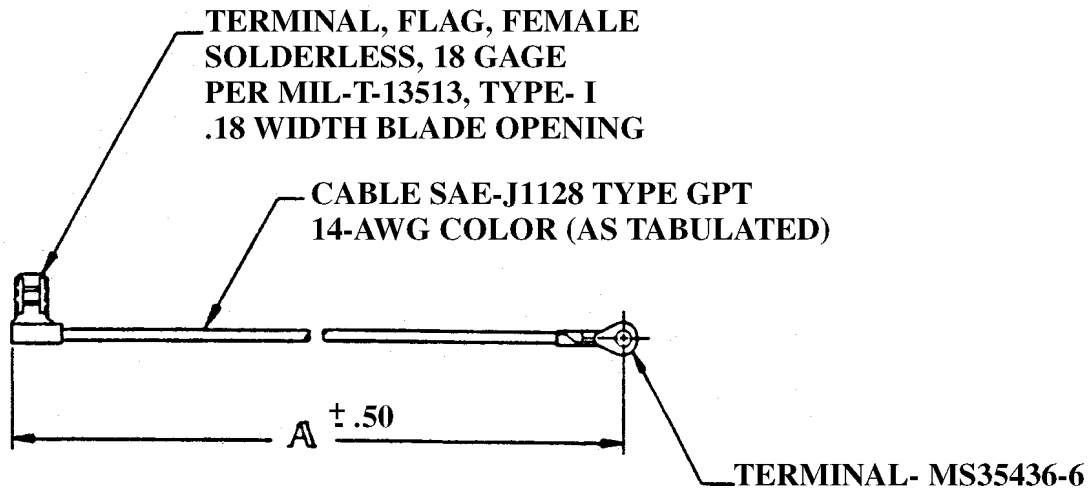

122360360-7	BLACK	8.00	64488	81143S
122360360-6	GREEN	12.00	64488	SAEJ1128TYG-14 AWG-GREEN
122360360-5	BROWN	12.00	64488	81146S
122360360-4	YELLOW	12.00	64488	570D-4
122360360-3	GREEN	8.00	64488	SAEJ1128TYG-14 AWG-GREEN
122360360-2	BROWN	8.00	64488	81146S
122360360-1	YELLOW	8.00	64488	570D-4
PART NO.	**COLOR**	**A (INCHES)**	**MFR CODE**	**MFR PART NO.**

Figure G-1. Wire Assmbly 12360360

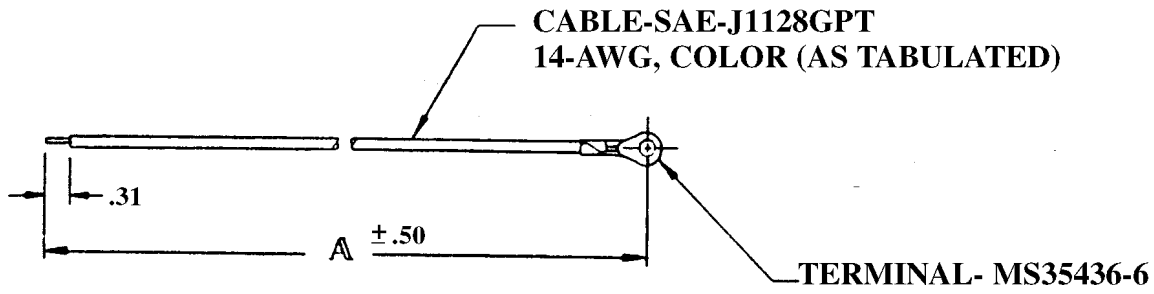

12360361-6	GREEN	8.00	64488	SAEJ1128TYG-14 AWG-GREEN
12360361-5	BROWN	8.00	64488	81146S
12360361-4	RED	8.00	64488	81141S
12360361-3	YELLOW	8.00	64488	570D-4
12360361-2	BLACK	8.00	64488	81143S
12360361-1	WHITE	15.00	64488	81147S
PART NO.	**COLOR**	**A (INCHES)**	**MFR CODE**	**MFR PART NO.**

Figure G-2. Wire Assembly 12360361

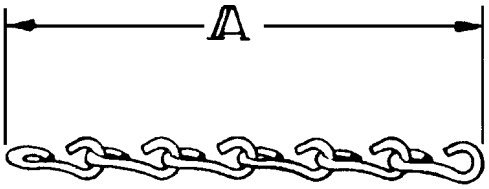

NOTES:
1. MATERIAL: CHAIN, SINGLE-JACK WELDLESS PER RR-C-271, TYPE II CLASS 7.
   STEEL SIZE: .135 (NO. 10)

2. FINISH: COMMERCIAL BRIGHT

12353862-7	12.00
12353862-7	10.00
12353862-7	8.31
12353862-7	7.38
12353862-7	4.62
12353862-7	3.69
12353862-7	16.62
12353862-7	9.25
PART NO.	**A**

Figure G-3. Chain 12353862

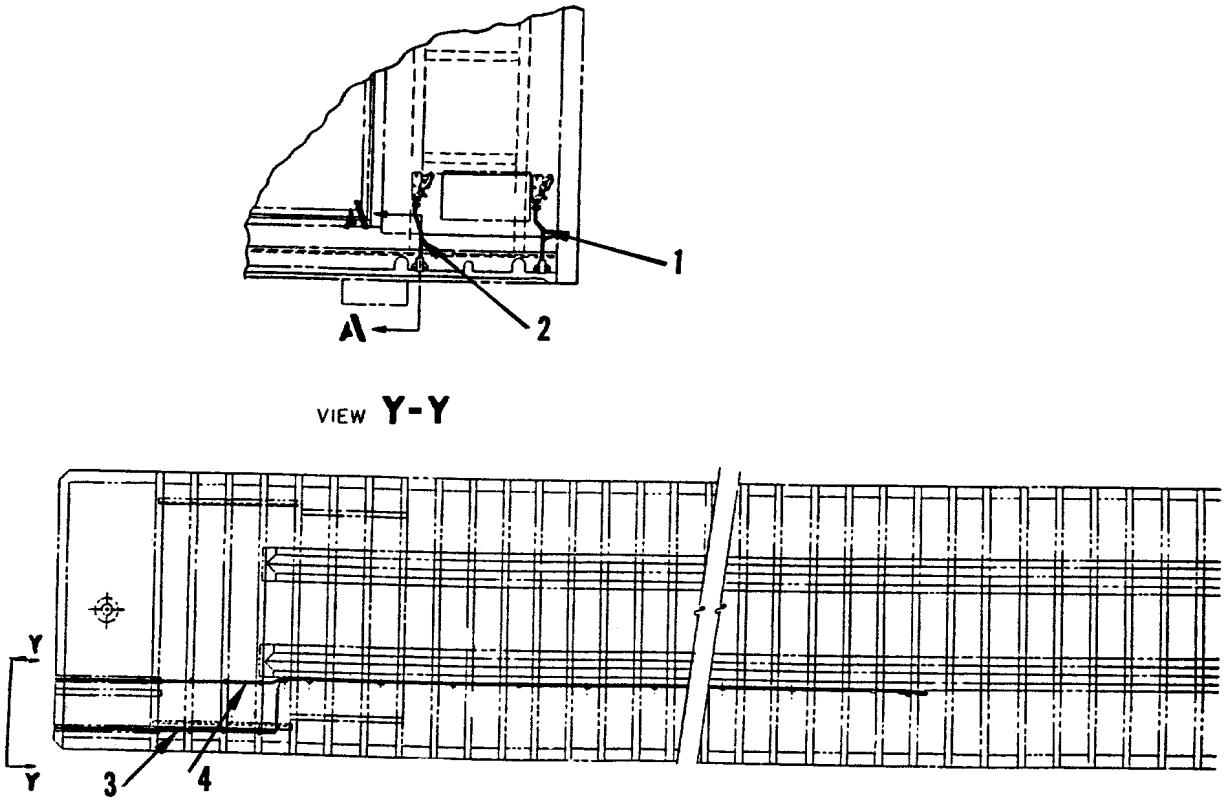

ITEM NO.	HOSE PART NO.	HOSE LENGTHS (INCHES)	FITTING END "A"	FITTING END "B"
1	CPR104420-2	11	12354108-2	12354108-2
2	CPR104420-2	11	12354108-2	12354108-2
3	CPR104420-2	384	12354108-2	12354108-2
4	CPR104420-2	360	12354108-2	12354108-2

Figure G-4. Nonmetallic Hose CPR104420- Lengths and Locations, Van Body

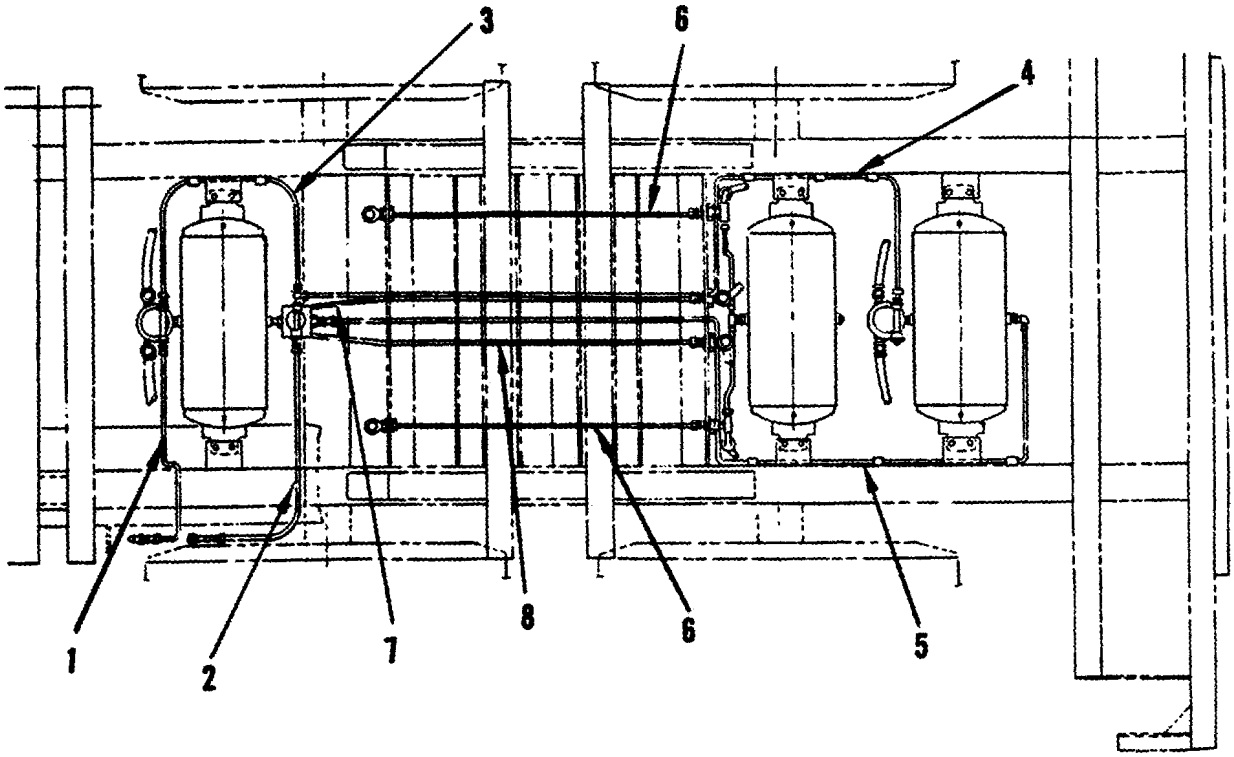

ITEM NO.	HOSE PART NO.	HOSE LENGTHS (INCHES)	FITTING END "A"	FITTING END "B"
1	CPR104420-2	23-1/2	12354108-1	12354108-2
2	CPR104420-2	28-1/2	12354108-2	12354108-1
3	CPR104420-2	40	12354108-2	12354111
4	CPR104420-2	92-1/2	12354111	12354108-2
5	CPR104420-2	110	12354108-2	12354108-1
6	CPR104420-2	34	12354138	12354108-2
7	CPR104420-2	54	12354108-3	12354108-3
8	CPR104420-2	54	12354108-3	12354108-3

Figure G-5. Nonmetallic Hose CPR104420- Lengths and Location, Dolly

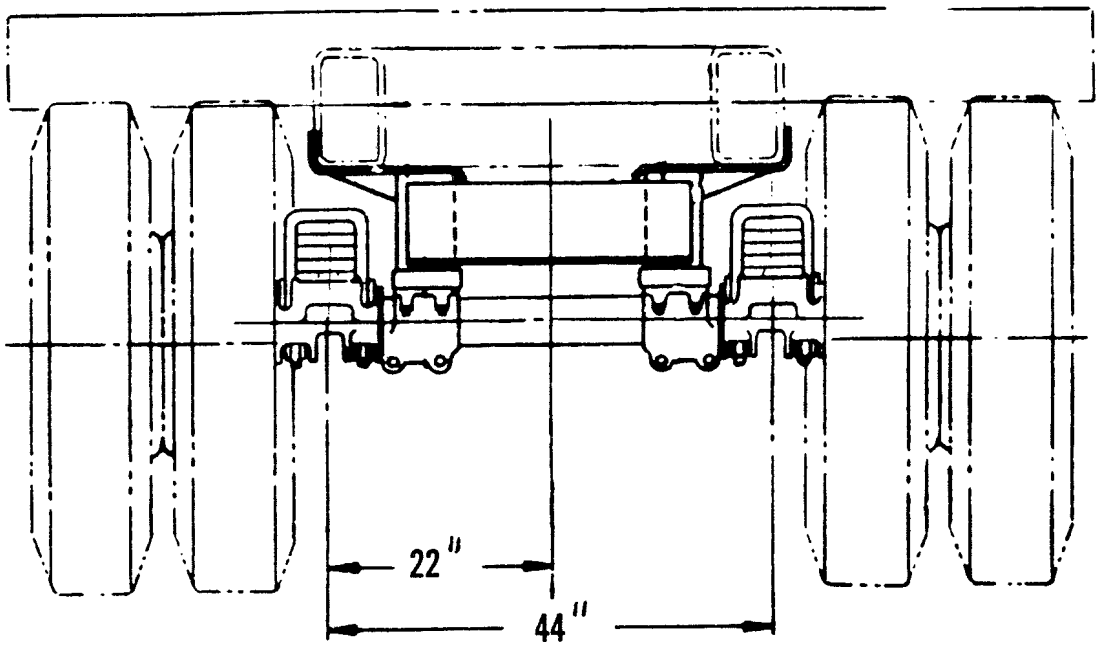

Figure G-6. Locational Dimensions of New Spring Seat

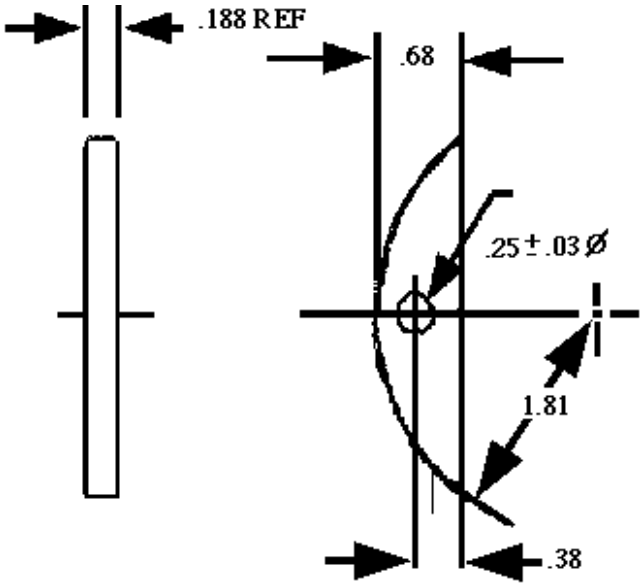

NOTE:
MAKE FROM ALUMINUM ALLOY 6061, T6
PER SPEC QQ-A-250/II, .188 THICK

Figure G-7. Spacer 12360386

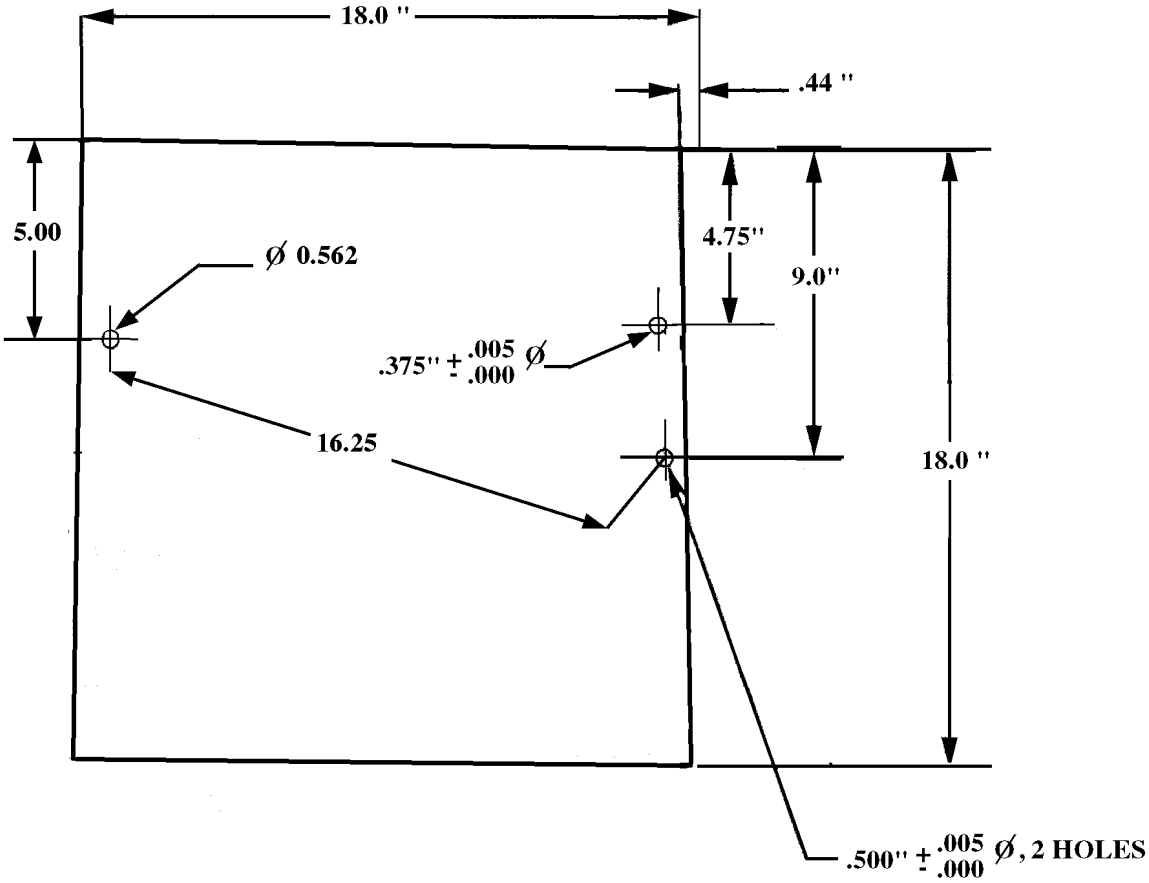

NOTE
1. MATERIAL:
ALUMINUM ALLOY 6061, TEMPER T6
SPEC-QQ-A-250/II .50 THICK

2. FINISH NOTE
METAL CONDITION PER MIL-C-5541
CLASS A PRIME PER TT-P-1757
CMPSN COLOR:Y
REMOVE ALL BURRS AND ROUGH EDGES

Figure G-8. Sand Plate 12307809

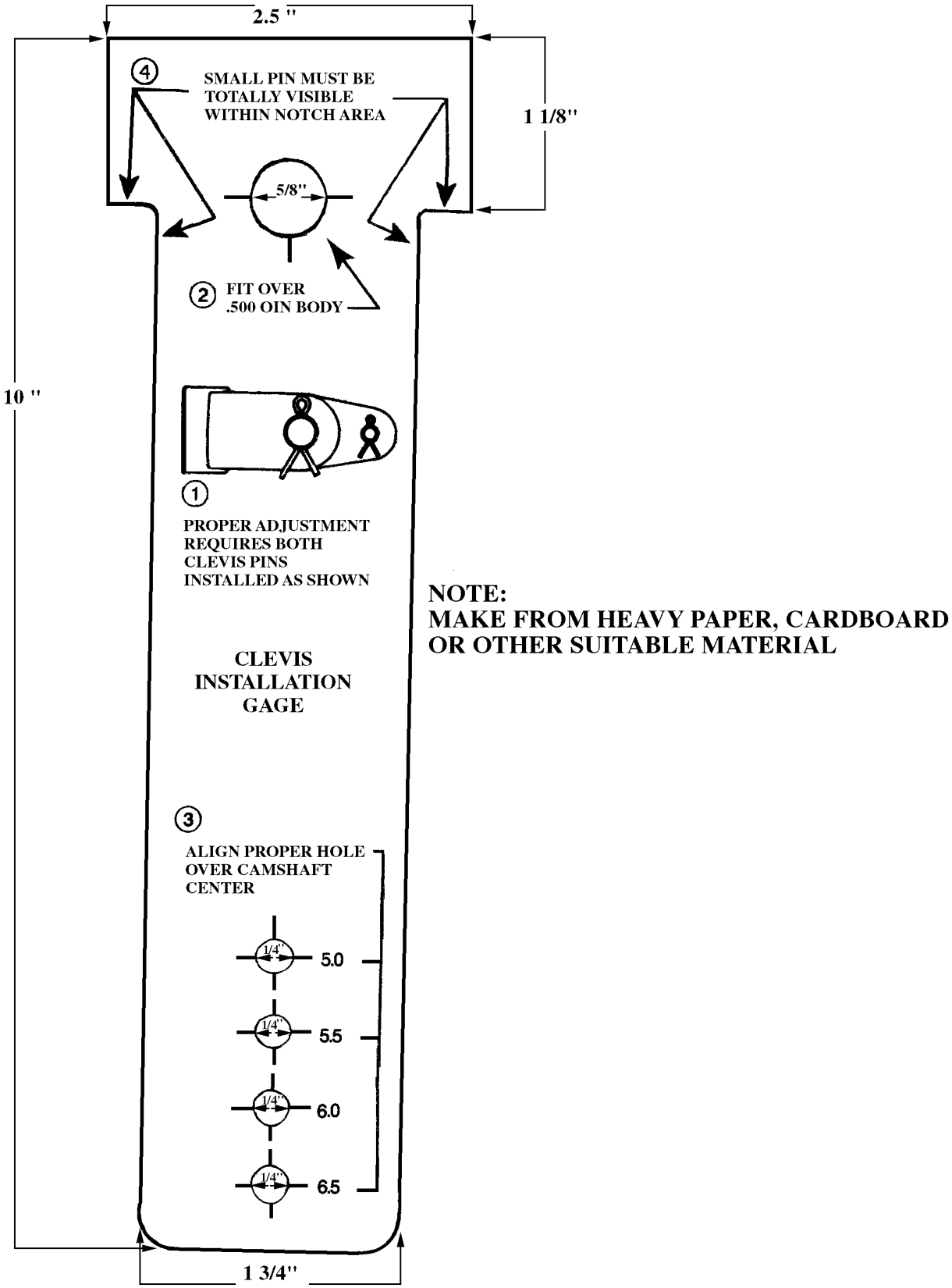

Figure G-9. Clevis Installation Gage (M129A4 Slack Adjuster)

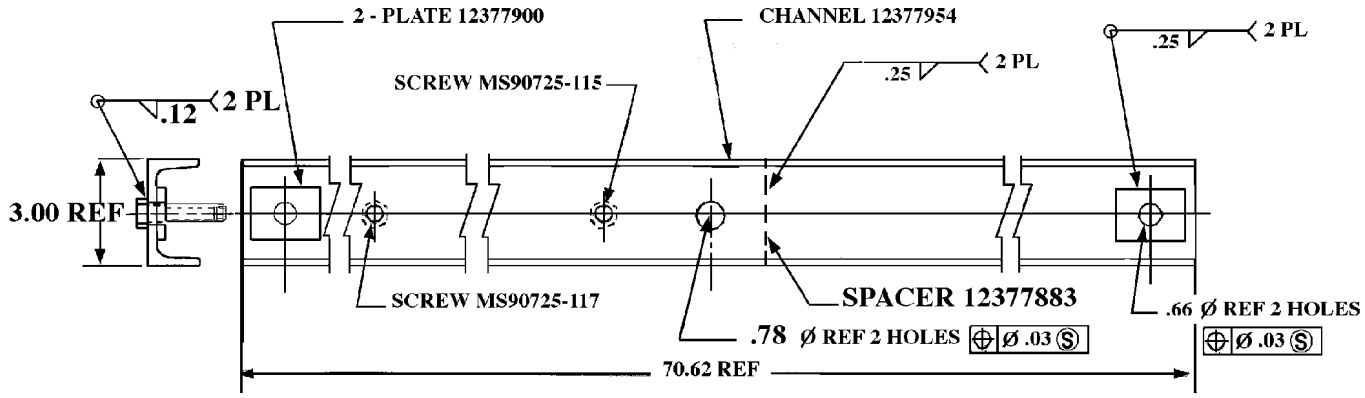

NOTE:
WELD IN ACCORDANCE WITH MIL-STD-1261, CLASS 2

Figure G-10. Channel Assembly 12377952

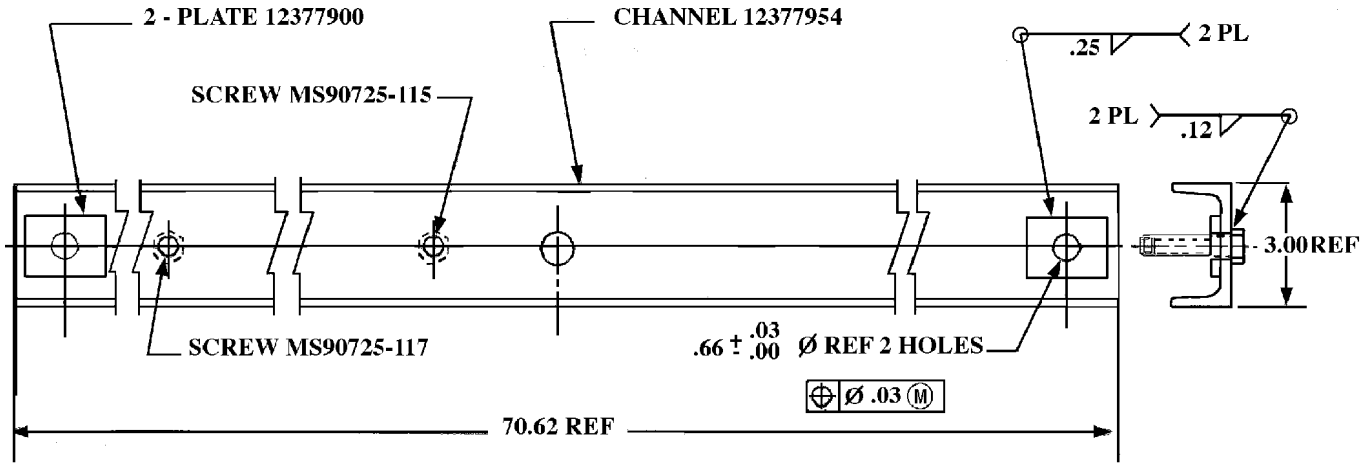

NOTE:
WELD IN ACCORDANCE WITH MIL-STD-1261, CLASS 2

Figure G-11. Channel Assembly 12377953

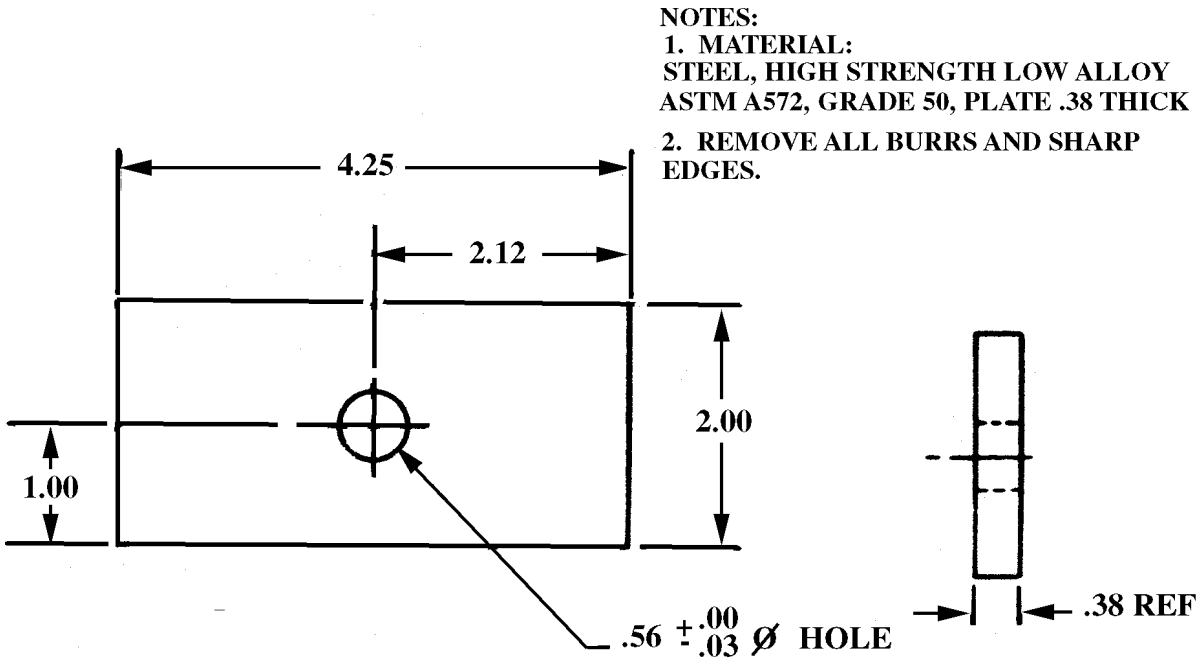

Figure G-12. Plate 12353952

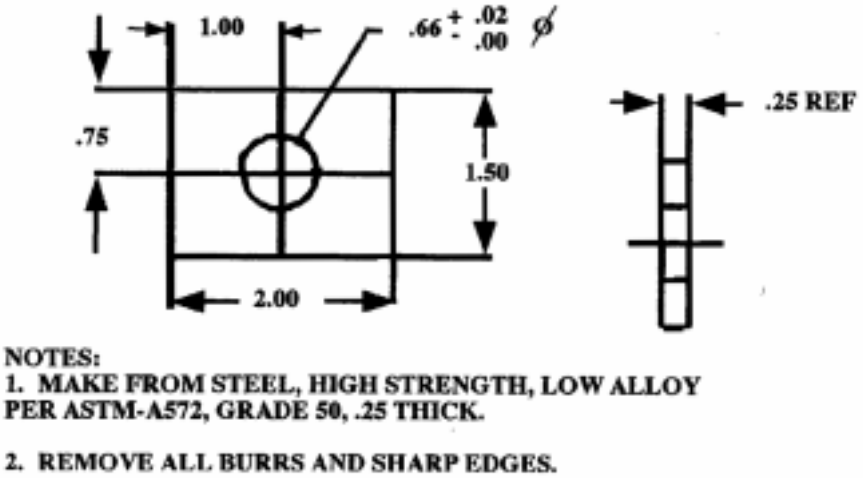

Figure G-13. Plate 12377900

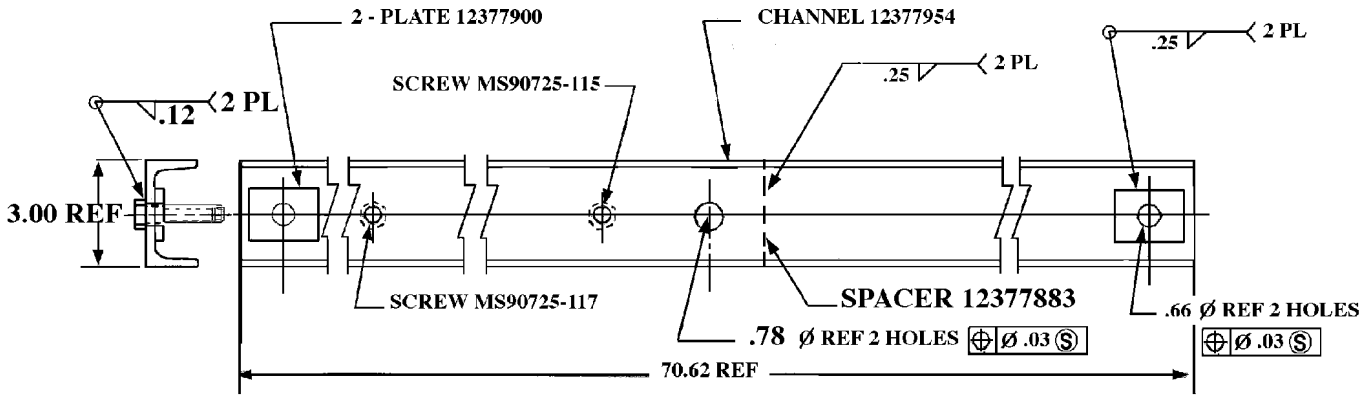

NOTE:
WELD IN ACCORDANCE WITH MIL-STD-1261, CLASS 2

Figure G-14. Channel 12377954

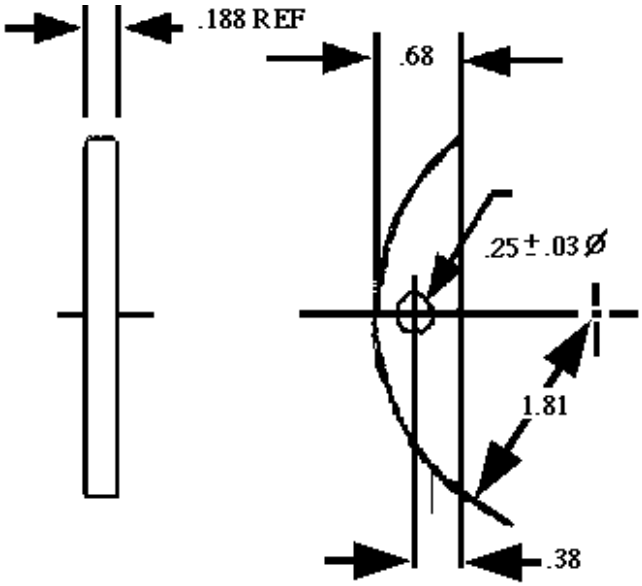

NOTE:
MAKE FROM ALUMINUM ALLOY 6061,T6
PER SPEC QQ-A-250/II, .188 THICK

Figure G-15. Spacer 12377883

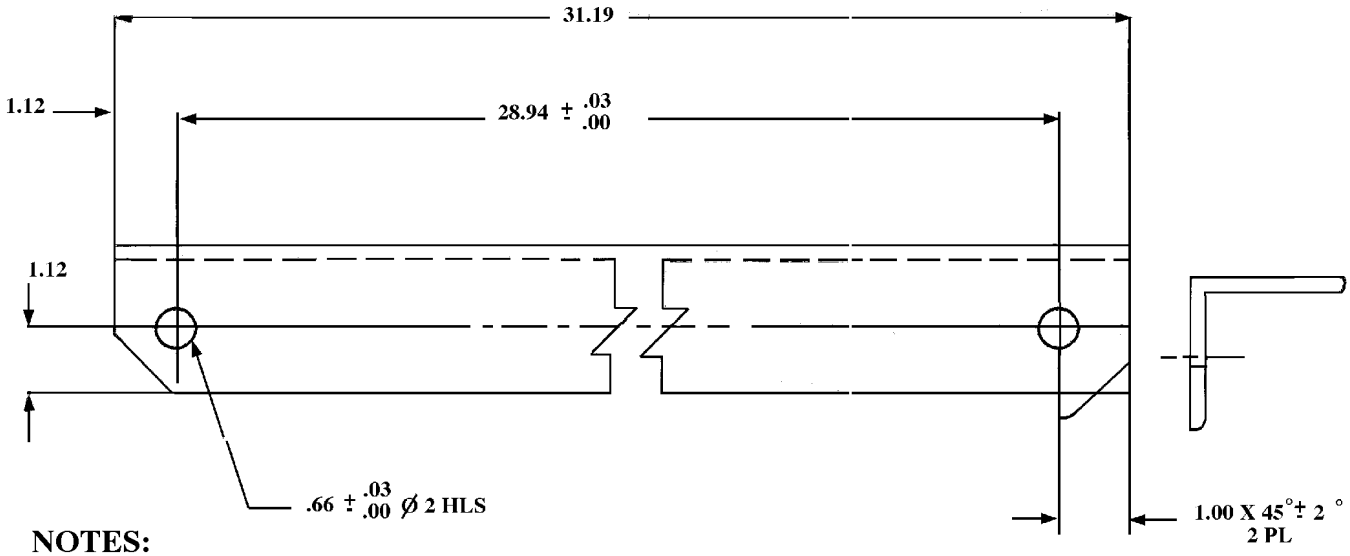

NOTES:

1. MATERIAL: ANGLE, STEEL ASTM-A36 2.50 X 2.50 X .25

2. REMOVE ALL BURRS AND SHARP EDGES

Figure G-16. Brace 12377897

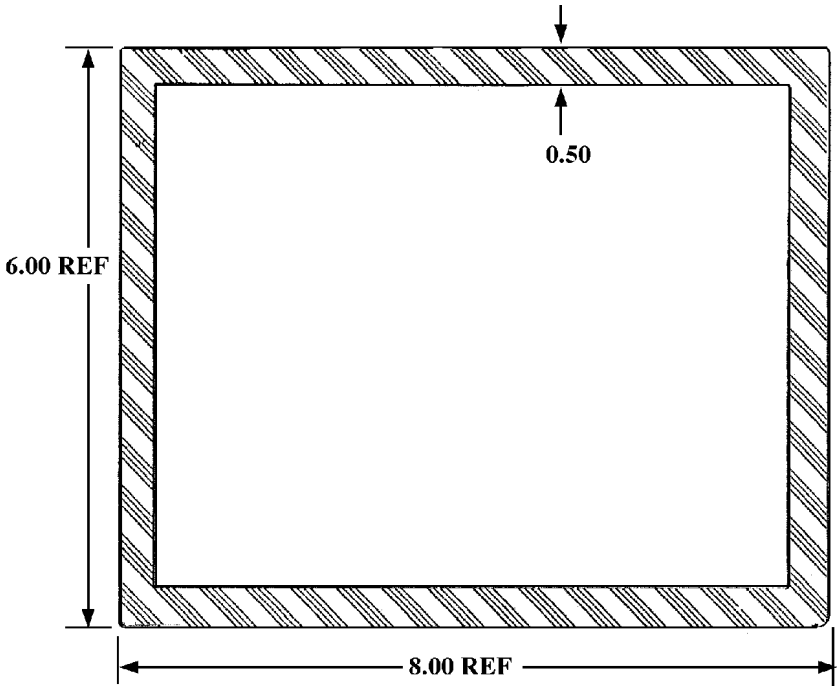

Figure G-17. Gasket 54206-004

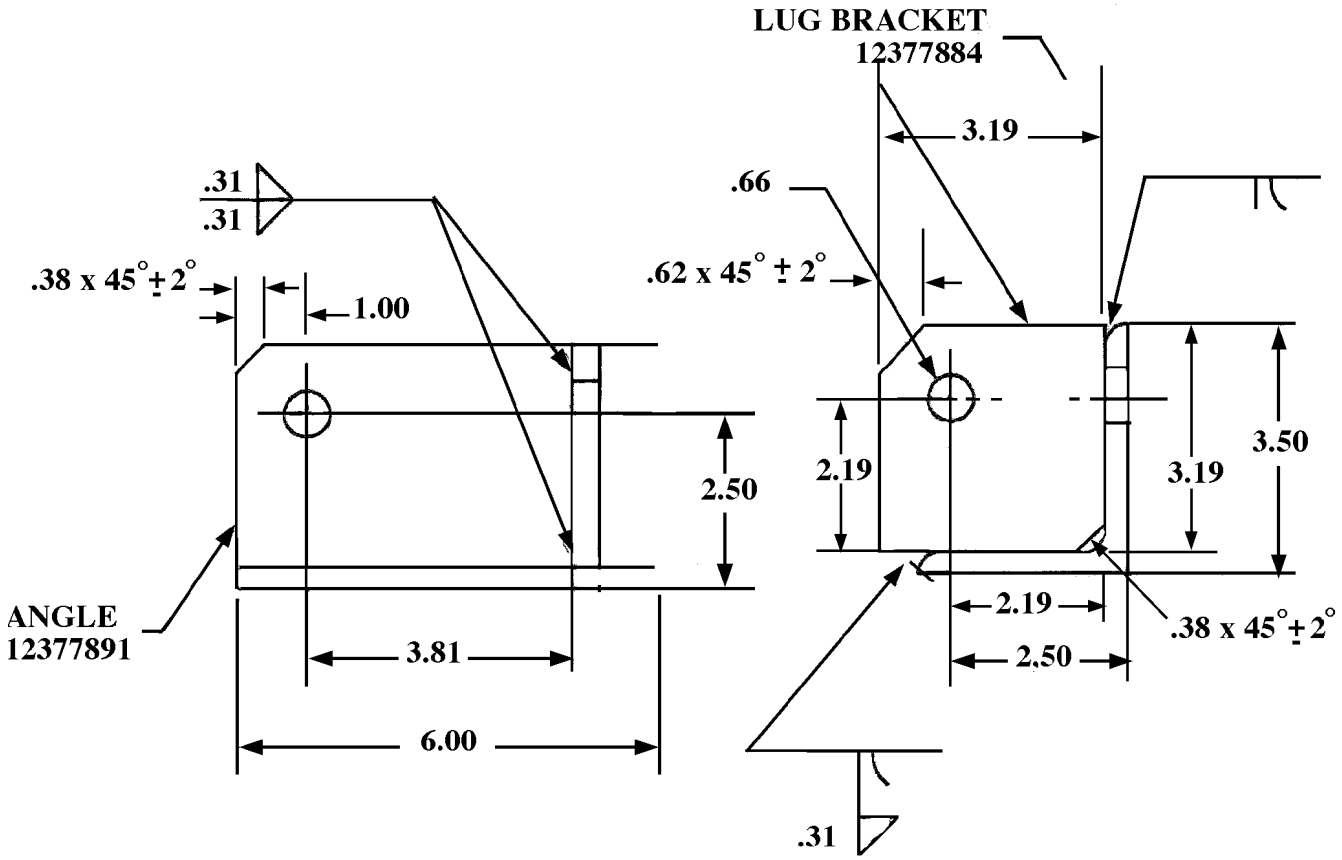

NOTES:
1. MAKE FROM ANGLE 12377891, STEEL ANGLE 3.50 X 3.00 X .31 THICK, PER ASTM-A36
2. MATERIAL FOR LUG BRACKET: STEEL ASTM-A572 GRADE 50, .38 THICK
3. WELD PER MIL-STD-1261, CLASS 2

Figure G-18. Lower Bracket Assembly 12377889

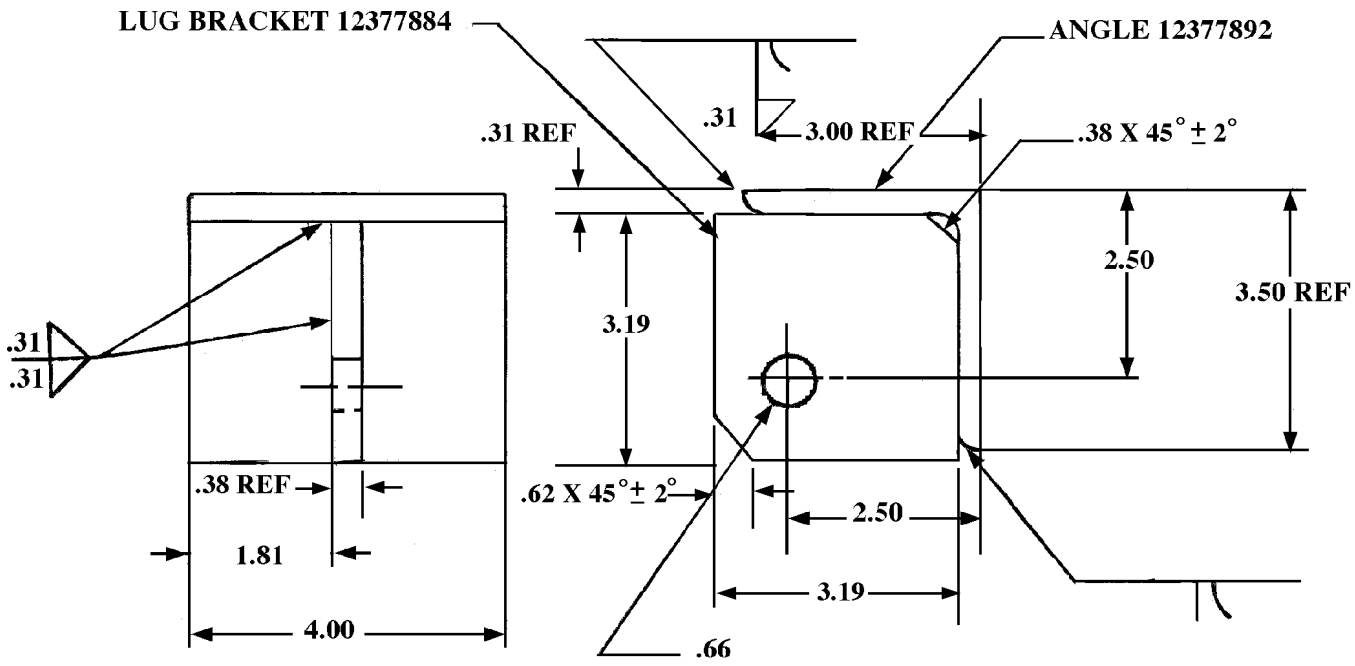

NOTES:
1. MAKE FROM ANGLE 12377892, STEEL ANGLE 3.50 X 3.00 X .31 THICK, PER ASTM-A36 GENERAL TOLERANCE +/- .06
2. MATERIAL FOR LUG BRACKET: STEEL ASTM-A572 GRADE 50, .38 THICK
3. WELD PER MIL-STD-1261, CLASS 2 GENERAL TOLERANCE (2PL) +/- .06

Figure G-19. Upper Bracket Assembly 12377890

Figure G-20. Vent Hood KTS-1769

Figure G-21. Spacer, Gladhand 12368757-1

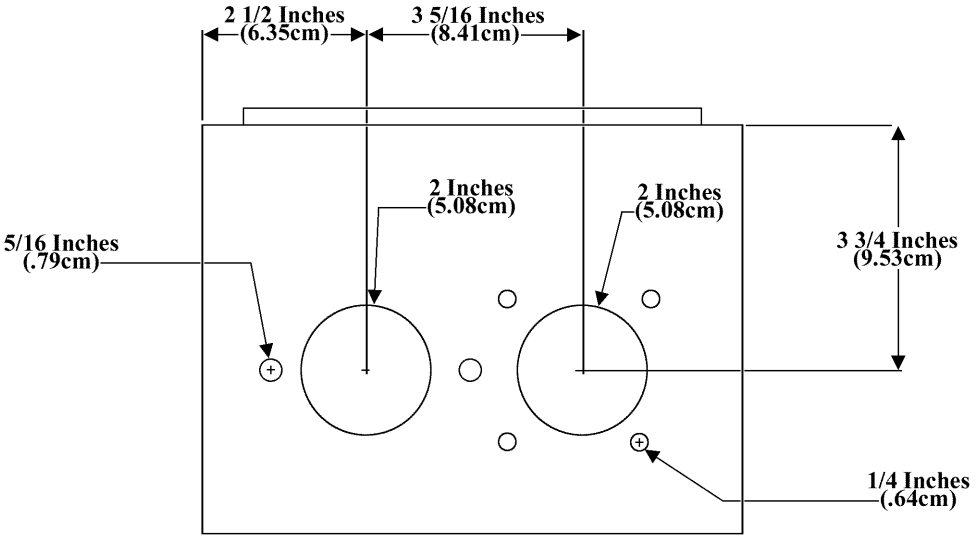

Junction Box Cover

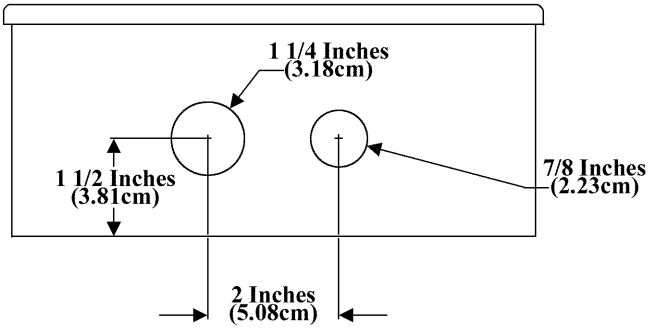

Junction Box Bottom

NOTES:

1. Make from Junction Box, P/N12360743, Galvinized
2. Drill two large holes in cover using electricians hole saw.
3. Mount civilian connector(s) P/N 12315647 and MS75021-1 in appropriate spots and using as template, mark

   additional holes to be drilled. Drill per instructions above.
4. Drill holes in bottom of junction box using electricians hole saw.
5. Assemble remaining parts in junction box.

Figure G-22. Junction Box 12360743-2

APPENDIX H
TORQUE LIMITS

H-1. General

This appendix lists the torque limits used on the XM1063 and M129A4 semitrailers.

H-2. Torque Limits

Torque limits are listed in Table H-1. Standard torque specifications are listed in Table H-2

Table H-1. Torque Limit

	Maximum Torque Dry	Maximum Torque Lube
Suspension System		
Trunnion U-bolt nuts	880 lb-ft (1193.3 Nm)	660 lb-ft (895 Nm)
Axle U-bolt nuts	300 lb-ft (406.8 Nm)	220 lb-ft (298.3 Nm)
End cap nuts	180 lb-ft (244 Nm)	130 lb-ft (176.3 Nm)
Landing Gear Leveling Jack		
Attaching nuts	120 lb-ft (162.7 Nm)	
Wheel nuts	450 - 500 lb-ft (610.2 - 678 Nm)	
Exterior Door Handle		
Retaining screw	3 - 4 lb-ft (4.1 - 5.4 Nm)	

CAUTION

If replacement capscrews are of a higher grade than originally supplied, use torque specifications for the original. Failure to do so may result in equipment damage from over torquing.

Table H-2. Standard Torque Specifications

APPENDIX I
LUBRICATION INSTRUCTIONS

I-1. General

This section contains the lubrication instructions, showing location, intervals and proper materials for lubricating the semitrailer. These instructions are mandatory.

I-2. Detailed Lubrication Information

a. Clean lubrication points, grease fittings and surrounding areas before applying lubricant.

b. Clean all lubrication points after lubricating to prevent accumulation of foreign matter.

c. Clean and lubricate bearings as specified in TM 9-214.

d. Maintain a record of vehicle lubrication and report any discrepancies noted during lubrication. Refer to DA PAM 738-750 for maintenance forms and procedures to record and report any findings.

I-3. Cleaning

a. Keep all external parts not requiring lubrication clean of lubricants.

b. Use dry cleaning solvent (item 3, Appendix E) to clean or wash grease or oil from metal parts.

c. After parts are cleaned, rinse and dry them thoroughly. Supply a light grade of oil to all polished metal surfaces to prevent rusting.

d. When authorized to install new parts, remove any preservation materials, such as rust preventive compound or protective grease, prior to installation. Apply lubricant prescribed in lubrication instructions if required.

I-4. Service Intervals

a. The service intervals specified are for conditions where normal operation, temperature and humidity prevail.

I-4. Service Intervals (cont'd)

b. Refer to FM 9-207 for instructions on necessary preliminary lubrication of the vehicle in cold weather areas.

c. After operation under dusty or sandy conditions, clean and insect all points of lubrication for fouled lubricants. Lubricate as necessary in accordance with lubrication instructions.

d. After fording operation, lubricate vehicle in accordance with lubrication instructions.

Table I-1. Lubrication Instructions

LUBRICATION INSTRUCTIONS	
SEMITRAILER, VAN: ELECTRONIC, TACTICAL, XM1063 **SEMITRAILER,VAN: SUPPLY, M129A4**	
Intervals are based on normal operation. Adjust to compensate for abnormal and severe conditions or contaminated lubricants. During inactive periods, intervals may be extended commensurate with adequate preservation. **WARNING** **Cleaning solvent is both toxic and flammable. Avoid prolonged breathing of vapors. Avoid skin contact. Keep away from open flame**	Clean fittings before lubrication, using cleaning solvent P-D-680. Dry before lubricating. Lubricate points indicated by DOTTED ARROW SHAFTS on both sides of equipment. A DOTTED CIRCLE indicates a drain hole. Lubricate after washing or fording as necessary. In the table indicating MAN HOURS required per interval, the time specified is the time required to perform all services at the particular interval.

Table I-1. Lubrication Instructions (cont'd)

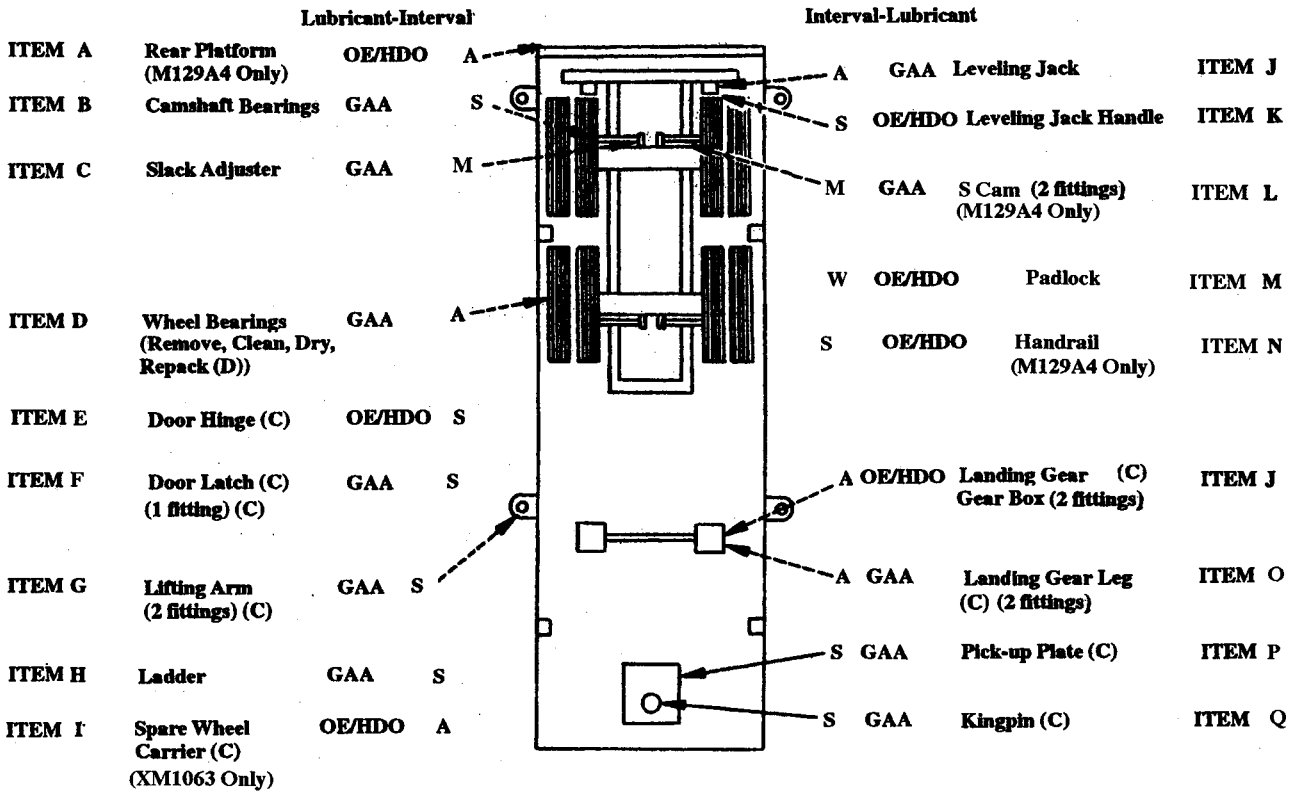

-TIME REQUIRED-

TOTAL MAN-HOURS	
INTERVAL	MAN-HR.
W	0.1
M	1.0
S	8.0
A	12.0

Table I-1. Lubrication Instructions (cont'd)
KEY

Lubricants	Expected Temperature				INTERVALS
	Above +15° F (Above -9° C)	+40° F to -15° F (+4° C to -26° C)	+40° F to -65° F (+4° C to -54° C)		
OE/HDO - Lubricating Oil Internal Combustion, Tactical Service MIL-L-2104	OE/HDO 15/40 or OE/HDO-30(0-238)	OE/HDO 15/40 or OE/HDO-10(0-237)		FOR ARTIC OPERATIONS, REFER TO FM 9-207	S-Semi-annually
OEA-Lubricating Oil Internal Combustion Arctic MIL-L-46167			OEA		A- Annually every second semi-annual "S" PM service
GAA- Grease, Automotive and Artillery MIL-G-10924	ALL TEMPERATURES				S-Semi-annually
BFS, Brake Fluid Silicone All temperature, Operational and Preservative MIL-B-46176					

NOTES

1. OIL CAN POINTS

Semiannually lubricate leveling jack handle, sand plate wing nut, loading jack bars/support braces (dolly), hinges, toggle pins on rear platform and handrail (M129A4 only) and spare wheel carrier pawl (XM1063 only) with OE/HDO.

If OEA lubricant is required to meet the temperature ranges prescribed in the KEY, OEA is to be used in all places where OE/HDO-10 is specified.

Grade 15W-40 (OE/HDO) is the preferred lubricant when temperatures are above +5° F (-15° C).

2. DO NOT LUBRICATE - Springs

3. LANDING GEAR AND LEVELING JACK - Semiannually extend legs, wipe clean and apply GAA to unpainted surfaces.

4. PICK-UP PLATE - Apply grease to an 18 inch (45.72 cm) diameter around the kingpin.

5. INTERVALS - Lubrication intervals will be regularly scheduled and performed during regular scheduled PMCS services whenever possible.

6. PADLOCK - Lubricate padlock weekly with OE/HDO.

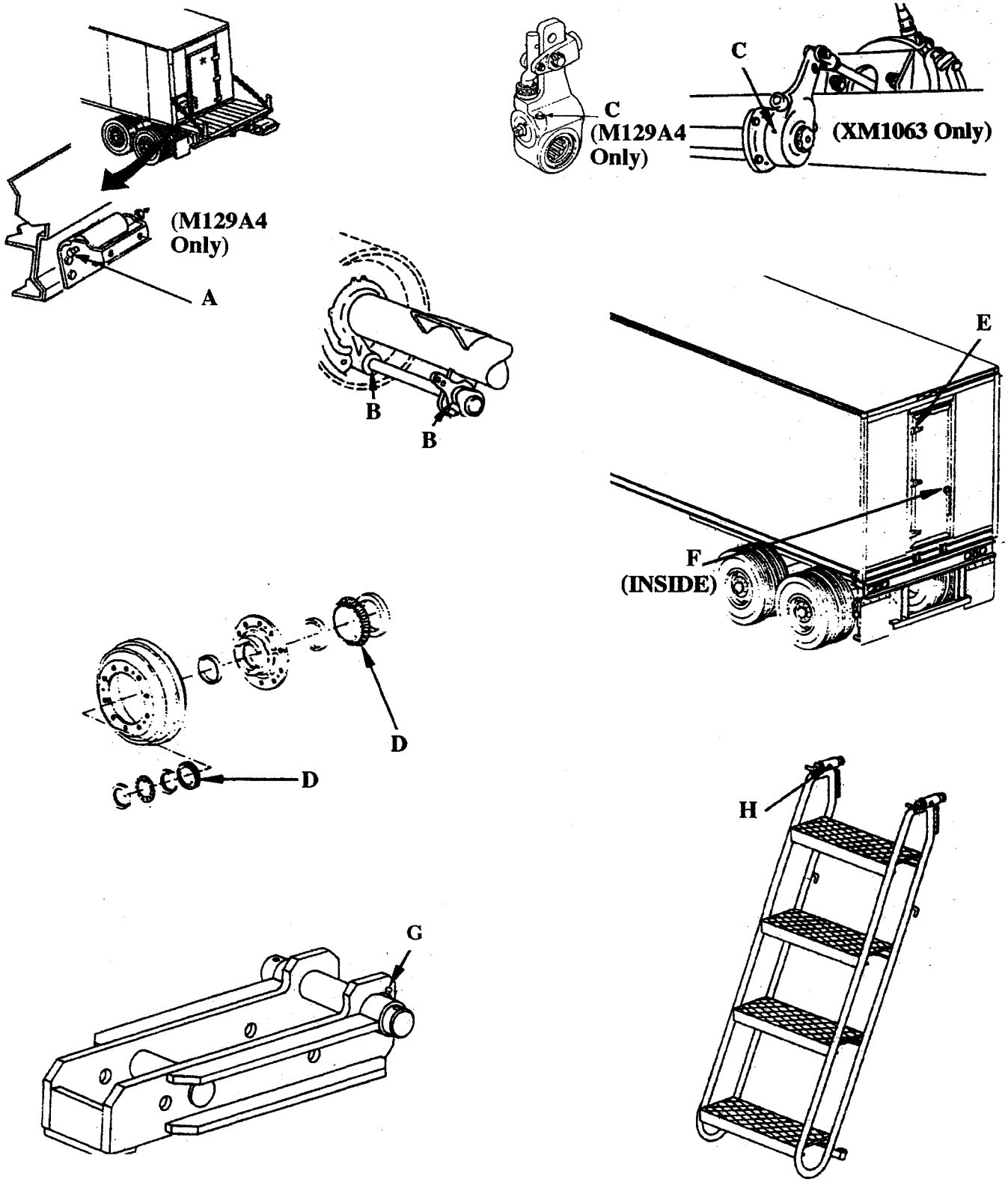

Localized Lubrication Points

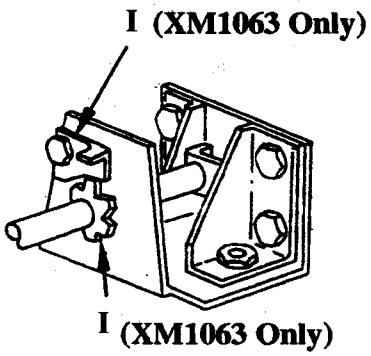

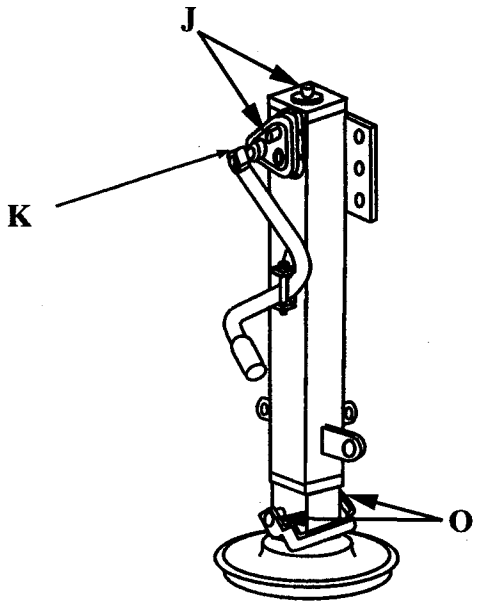

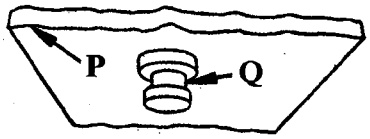

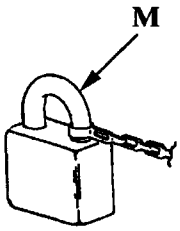

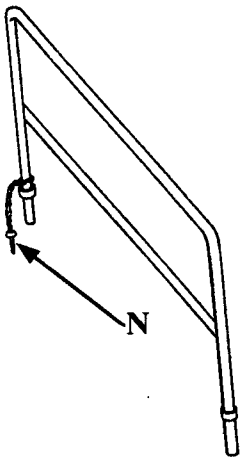

Localized Lubrication Points

I-5. Painting and Identification Marking

a. Painting. Instructions for preparation of the material for painting, methods of painting and materials to be used are contained in TM 43-0139.

b. Identification Marking. Re-stencil the semitrailer chassis or body if the markings are not legible.Instructions for marking are contained in TB 43-0209. The numerals and letters are of simple block type (1-1/2 inches high) with curved lines where applicable, and painted with black enamel to specification MIL-E-52798. Proceed as follows:

WARNING

To prevent injury to personnel, avoid excessive inhalation of vapors. All cleaning and stenciling procedures must be performed in a well-ventilated room or outdoors. A fire extinguisher must be positioned adjacent to the work area.

(1) Remove oil and grease from equipment.

(2) Apply paint to stencil with dabbing motion.

(3) Remove stencil and fill in spaces to provide continuous lines in the letters and numerals.

(4) Allow paint to dry for 24 hours.

APPENDIX J
INSTALLATION OF 110-VOLT INTERIOR POWER RECEPTACLES

J-1. Scope

This appendix provides installation instructions for M129A4 semitrailers without 110-volt power receptacles previously installed.

J-2. General

A. Using units are authorized to requisition and request Direct Support maintenance facilities to install 110-volt power receptacles if required by the unit mission and authorized by the Unit Commander.

B. The using unit will requisition and fund the purchase of the parts necessary for installation.

C. The Direct Support unit will install the 110-volt power receptacles after all parts have been received and provided to them.

D. See Appendix F, Figure 6 for a list of required part National Stock Numbers.

J-3. Installation

A. ELECTRICAL JUNCTION BOX ASSEMBLY

1. Cut 11 pieces of PVC pipe, Schedule 40, electrical conduit, 1 1/2 inches (3.81 cm) long (1). After cutting, remove all burrs, shavings, and dust. These 1 1/2 inches (3.81 cm) lengths of conduit will serve as connectors between the junction boxes. 10 are for the for junction boxes, P/N E981DFN (2), and one is for the last junction box, P/N E980DFN (3).
2. Glue two 1 1/2” pieces of conduit (1) in the end of each junction box, P/N E981DFN (2). Glue one 1 1/2” piece of conduit (1), in the end of the last junction box, P/N E980DFN (3). This junction box is used as the terminator for the curcuit.
3. Glue two female adapters, P/N E942D (4), on the end of the 1 1/2” conduit pieces (1). These serve as mounting points for the compression nut connectors, used later.

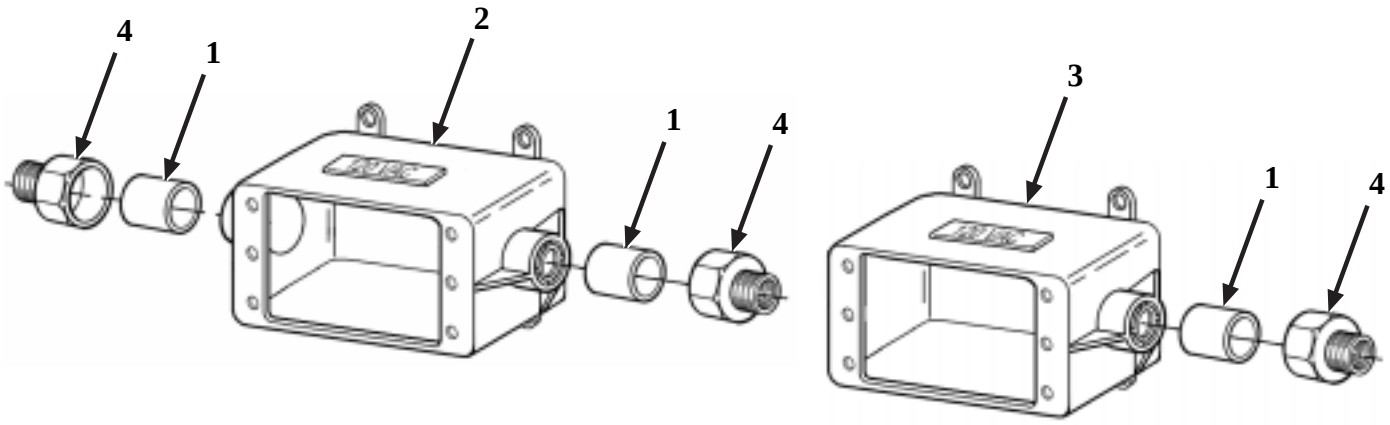

4. Disassemble the compression nut connectors, P/N LT43DN (5), prior to assembly. Discard the gasket (6), and nut (7) on 11 of them. Keep the gasket (6) and nut (7) for the 12th one. Glue the straight ends of two compression nut connectors, P/N LT43DN (5) on the ends of the female adapters, P/N E942D (4), previously installed. Ensure the glue does not adhere to the compression nut end. These will be used later in the assembly.

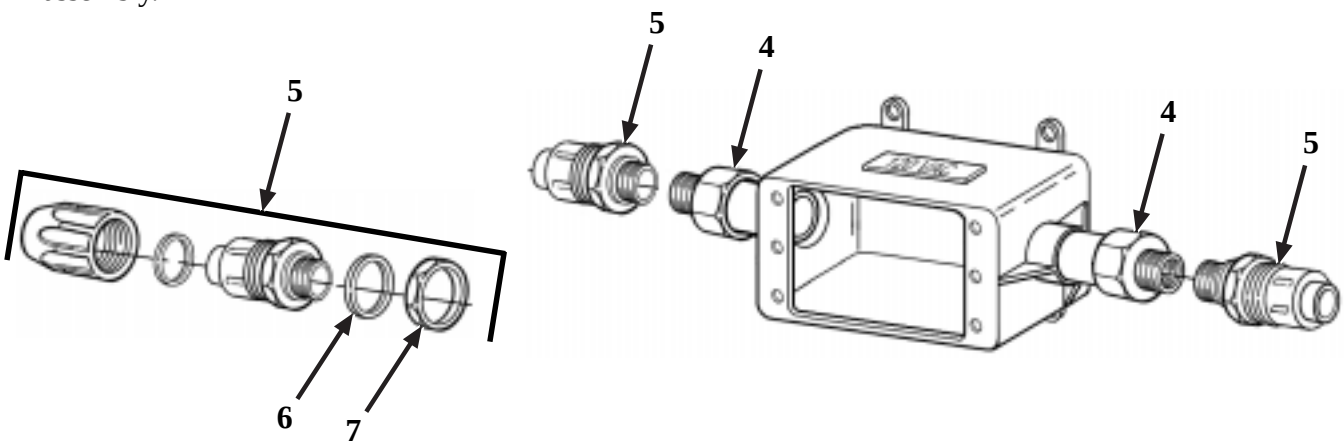

B. ELECTRICAL JUNCTION BOX LAYOUT

1. Mark the locations of the junction boxes and install boxes with screws, P/N MS51861-67.

NOTE

The junction box with the single outlet, P/N E980DFN (3), is mounted as the last junction box in the circuit, the farthest one from the circuit breaker box.

2. The illustration below is a guide only. Junction boxes can be installed in any location 110-volt power is required depending on location of desks, workbenches etc. The amount of PVC electrical conduit may vary depending on the exact location for the junction boxes. Ensure enough conduit is on hand prior to installation.

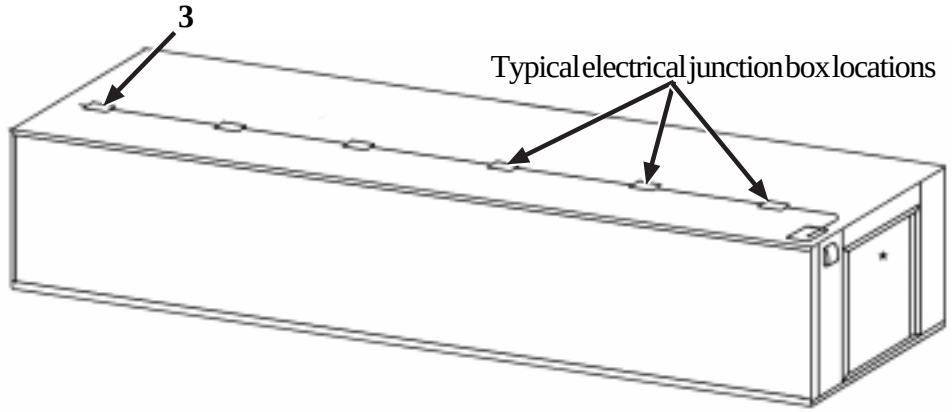

C. INSTALLATION OF FLEXIBLE ELECTRICAL CONDUIT

1. Start working at the front of the trailer. Measure the distance between the protruding ends of the compression nut connectors, P/N LT43DN(5), and add 1 1/2 inches (3.81 cm) length. Cut a length of nonmetallic, flexible conduit, P/N 15005 (8), long enough to fit between the first and second junction boxes.
2. Remove the compression nut (9) from the compression nut connector(10) and insert the end of the nonmetallic, flexible conduit (8) through the compression nut (9). Slide the flexible conduit (8) 3/4 inch (1.91 cm) over the outside of the connector (10). Leave the gasket (11) in place around connector (10) and tighten the compression nut (9) securing flexible conduit (8) to the connector (10). Do this at both ends of the flexible conduit securing to the junction boxes.
3. Continue down the semitrailer until all junction boxes are connected by nonmetallic, flexible conduit (8).
4. Cut a piece of flexible conduit (8) long enough to reach from the last junction box compression nut connector, across the semitrailer wall and to the power distribution panel (12). Install one end of the flexible conduit (8) to the last junction box. Using the last compession nut connector, P/N LT43DN (10), gasket (6), and nut (7), saved earlier, connect the compression nut connector (10) to the power distribution box (12).

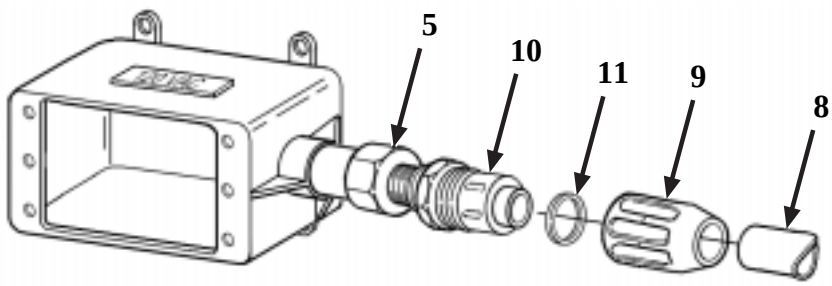

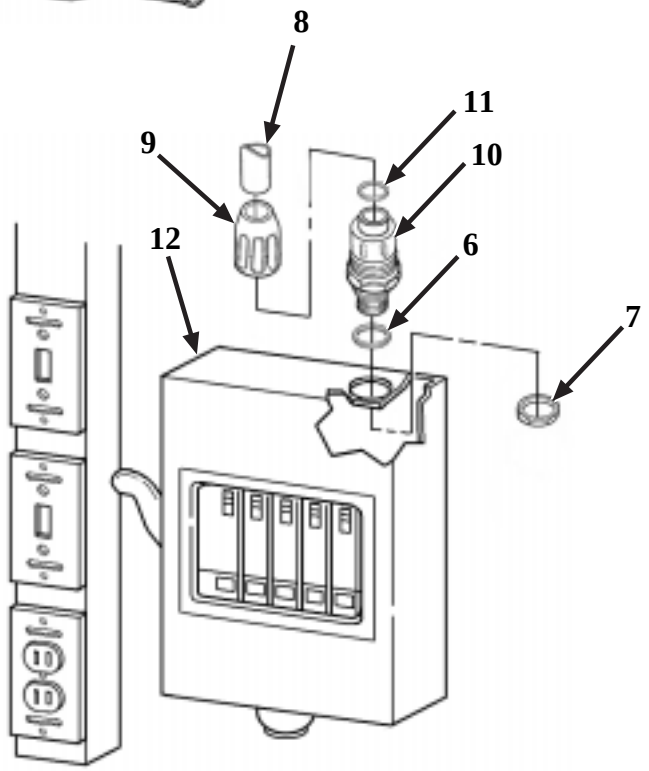

5. Install retaining straps, P/N E977DC (13), using two tapping screws, P/N MS51861-49 (14), as required to provide proper mounting and support to the flexible conduit (8), as required. Recommend a minimum of one every 4 feet (1.22 M) of distance between electrical boxes.

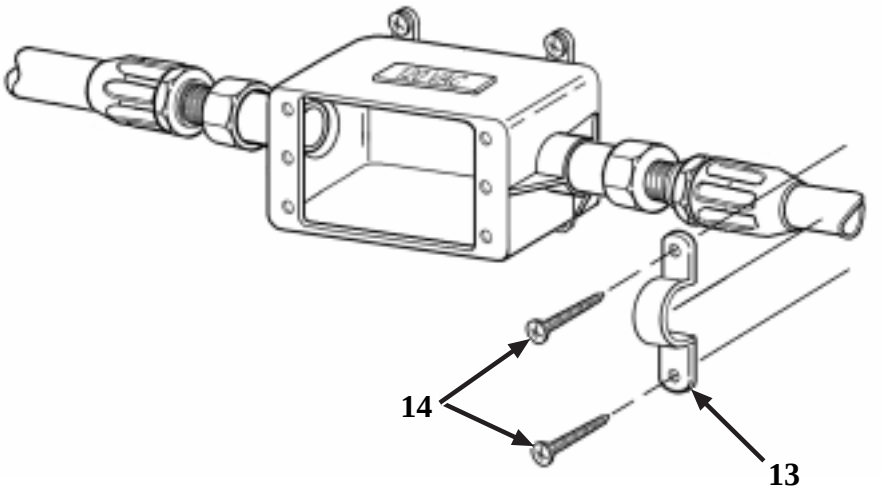

D. INSTALLATION OF ELECTRICAL WIRE

1. Take one end of each of approximately 40 feet (12.2 M) electrical wires, P/N M5086/1-12-0 (Black) (15), P/N M5086/1-12-5 (Green) (16), and P/N M5086/1-12-9 (White) (17), and lay them side by side. Using electrical tape (18), secure one end of wires together.
2. Using the taped end (18), guide the wires through the circuit breaker box (12), connector assembly (19), flexible conduit (8), and junction box assemblies (3) until reaching the single junction box at the front of the semitrailer.

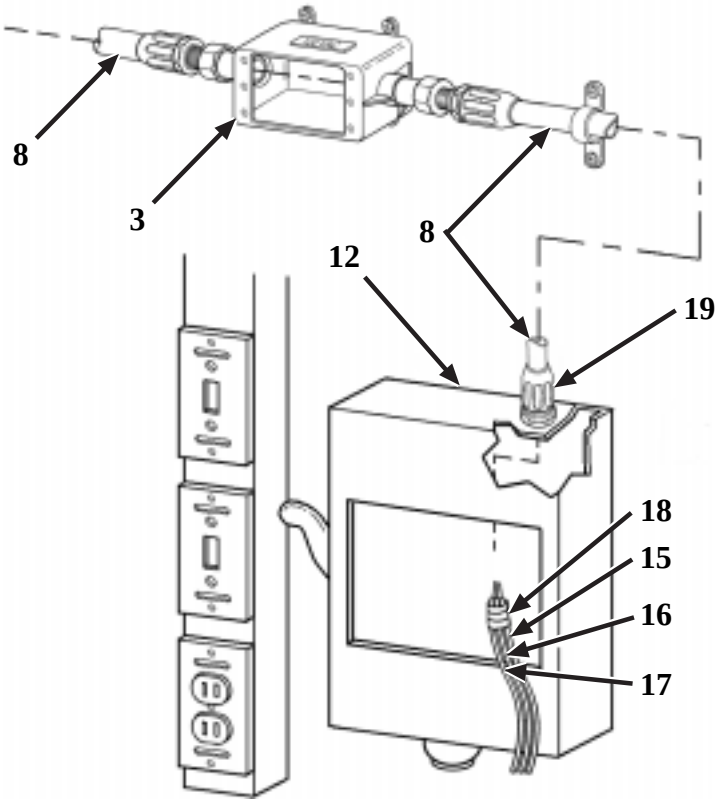

D. INSTALLATION OF RECEPTACLE CONNECTORS

1. Install the connector receptacle, P/N 10937538 (20), in the electrical junction box (3) in the front of the semitrailer. Strip the insulation from each of the three wires (15), (16), and (17) per the strip guage molded into the back of the connector receptacle (20). Insert the black wire (15) into one of the holes under the dark screws on one side of the outlet and tighten the screw until the wire is secure. Insert the white wire (17) into a hole under the light screws on the opposite side of the connector receplacle (20) and tighten the screw until the wire is secure. Loop the green wire (16) under the green grounding screw and tighten the screw until the wire is secure.
2. Push the connector recepacle (20) into the electrical junction box (3) and fasten in place with the machine screws provided with the recepacle (20).

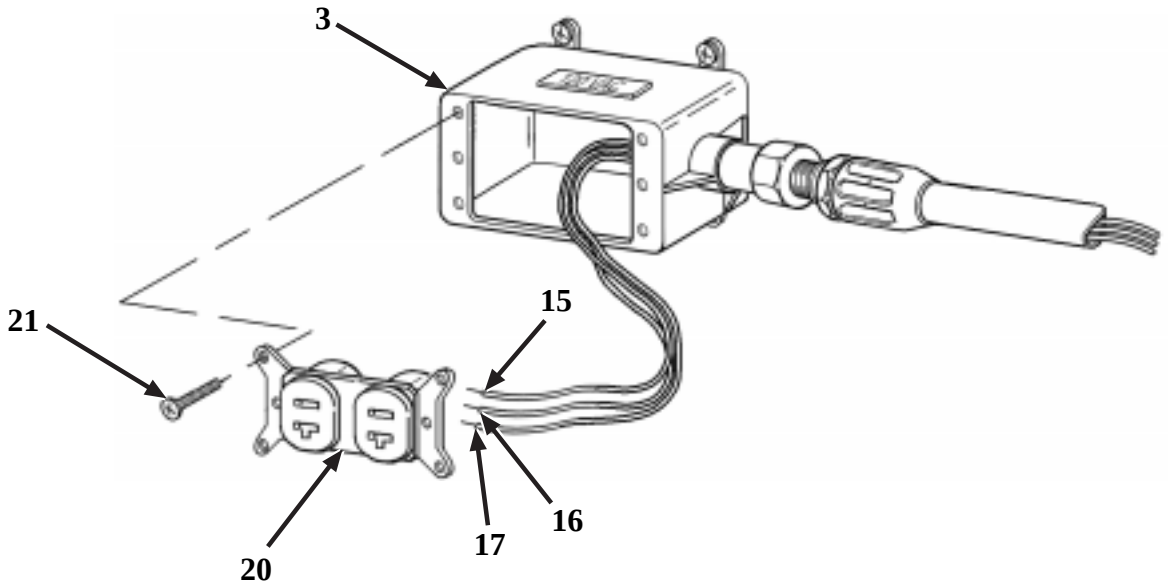

3. Go to the next electrical junction box (3) and pull down enough wire to make the connections to the connector receptacle (20). Cut the wires, (15), (16), and (17) at the appropriate point and strip insulation from the ends of all wires per the strip guage molded into the back of the connector recepacle (20).

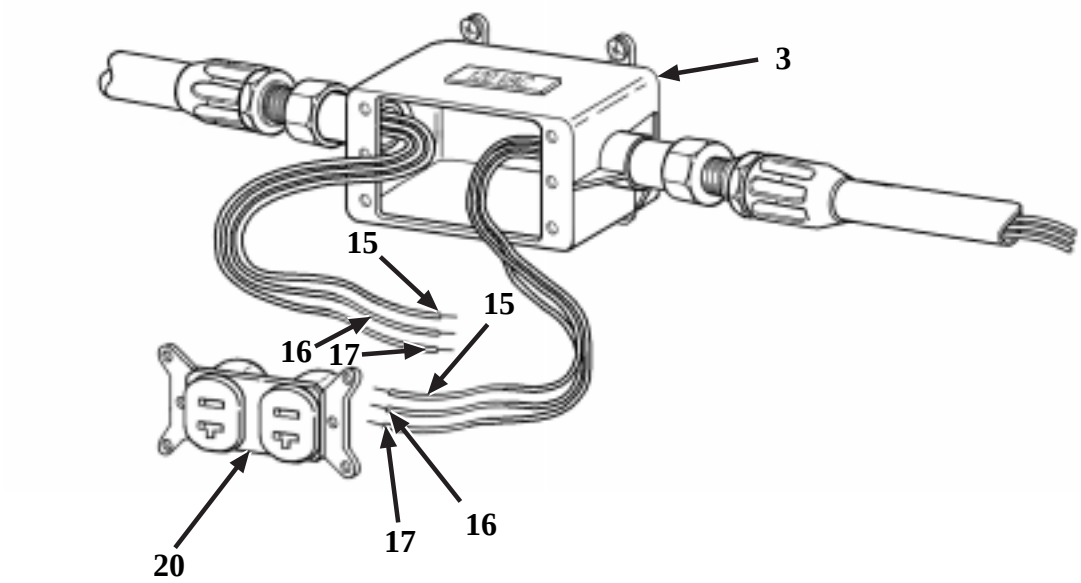

4. Connect the wires to the second connector receptacle (20). Insert the black wires (15) into the two holes under the dark screws on one side of the receptacle and tighten screws until both wires are secure. Insert the white wires (17) into the two holes under the light screws on the opposite side of the receptacle and tighten screws until both of these wires are secure. Wrap the green wires (16) around the green grounding screw protruding from the corner of the receptacle and tighten screw until both these wires are secure to the receptacle (20).
5. Push the connector receptacle (20) into the electrical junction box (3) and fasten in place with the machine screws provided with the receptacle (21).
6. Continue installing the remaining connector receptacles (20) in the same manner.
7. When completed, install the electrical wall plates (22) with the machine screws (23).

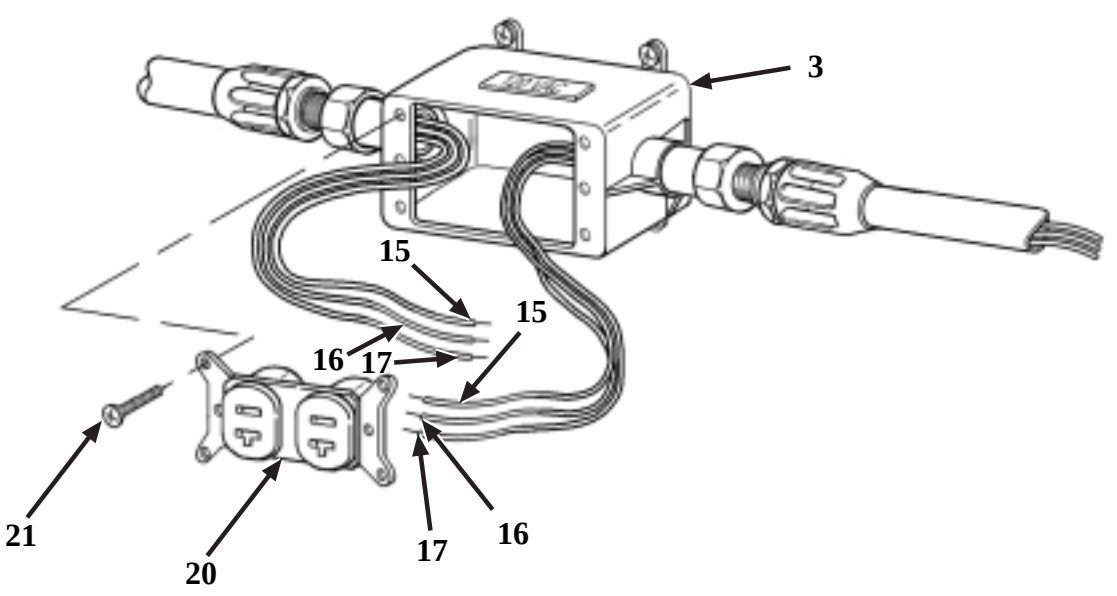

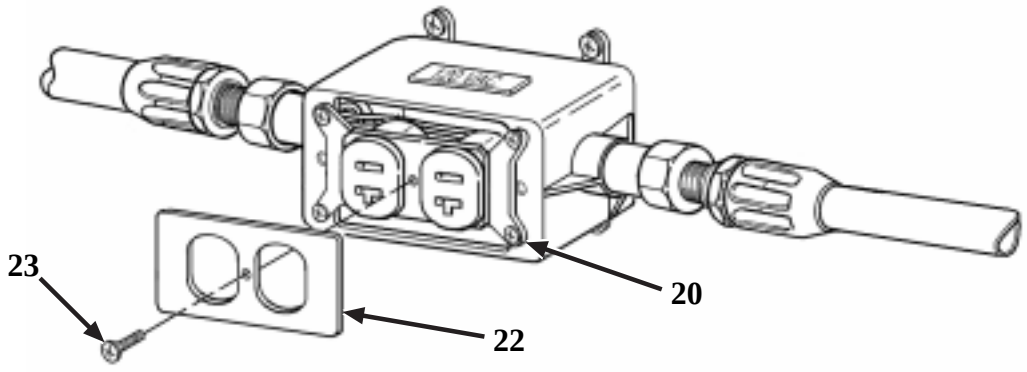

E. ELECTRICAL INSTALLATION TO CIRCUIT BREAKER BOX

1. Open the circuit breaker box (12) and install a new 20 amp circuit breaker, P/N 12368614 (24), in an open slot.
2. Strip the insulation from the end of the three wires (15), (16), and (17) and install three terminal lugs P/N 853145 (25), to the ends of the three wires (15), (16), and (17).
3. Inside the circuit breaker box (12), connect the black wire (15) to the 20 amp circuit breaker (24). Connect the white wire (17) to the neutral bus (26), and connect the green wire (16) to the ground bus (27).
4. Close the cover on the circuit breaker box (12).

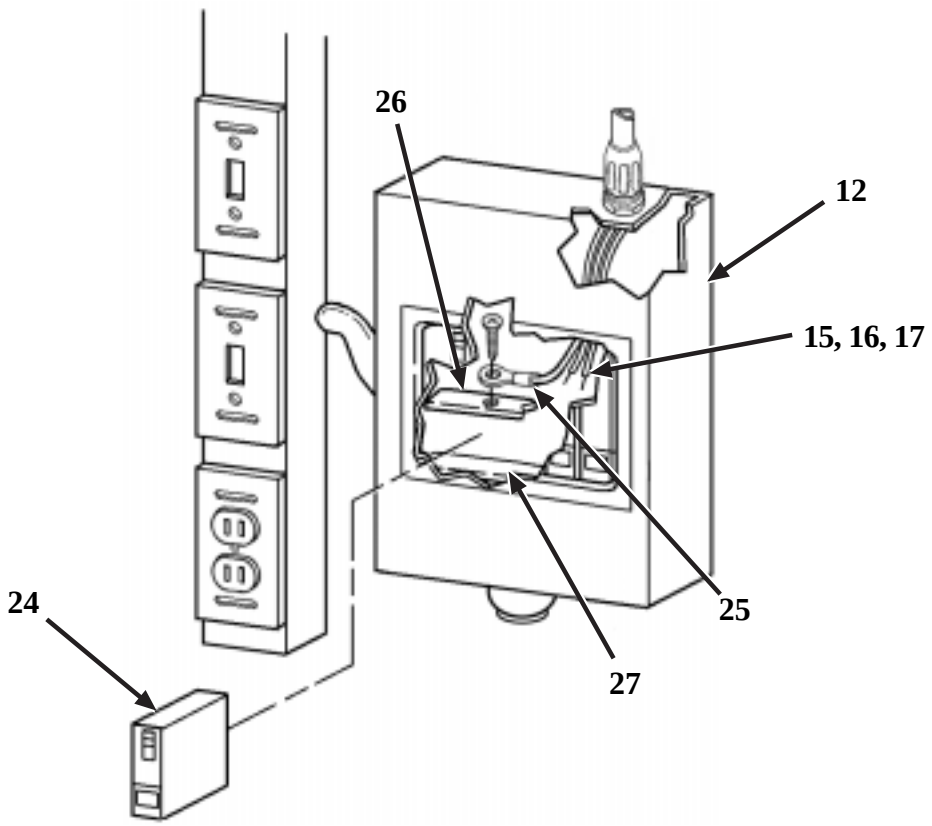

F. 110-VOLT INSTALLATION TEST

1. Connect 110-volt power to the semitrailer and using a multimeter, test each connector receptacle for 110-volt power.
2. If 110-volt power is not available at the connector receptacles, troubleshoot 110-volt power system.

APPENDIX K
INTERIOR CABINET INSTALLATION GUIDELINES

Section I. INTRODUCTION

K-1. Scope

This appendix provides guidelines for installation and mounting of storage cabinets, workbenches, or desks in M129A4 semitrailers.

K-2. General

A. Various civilian companies will assist units with prefabricated storage systems. These companies will do an on cite survey looking at what you intend to store and transport and will provide you with various solutions depending on the units intended use of the M129A4 Semitrailer. They will provide units with a written estimate for the storage system and perform installation if required.

B. This procedure was written to provide assistance to the individuals performing cabinet installations in the M129A4 Semitrailer or a replacement van body. Instructions should be read in their entirety, prior to proceeding with the cabinet installation effort.

K-3. Installation

A. PLANNING STAGE

1. Determine which cabinets, workbenches, or desks are to be installed into a particular semitrailer body. Ensure sufficient space is available.
2. Leave 1 foot (.3048 M) of free space be left open from the front wall of the trailer, for ventilation purposes.
3. Leave 2 feet (.6096 M) of free space be left from the rear wall, for access to the ventilation fan and electric panels. Additional wall or ceiling space may be needed to accommodate heating/air conditioning ductwork, (if installed). It is generally easier to install cabinets, if the same brand name of cabinets is used for an entire trailer.

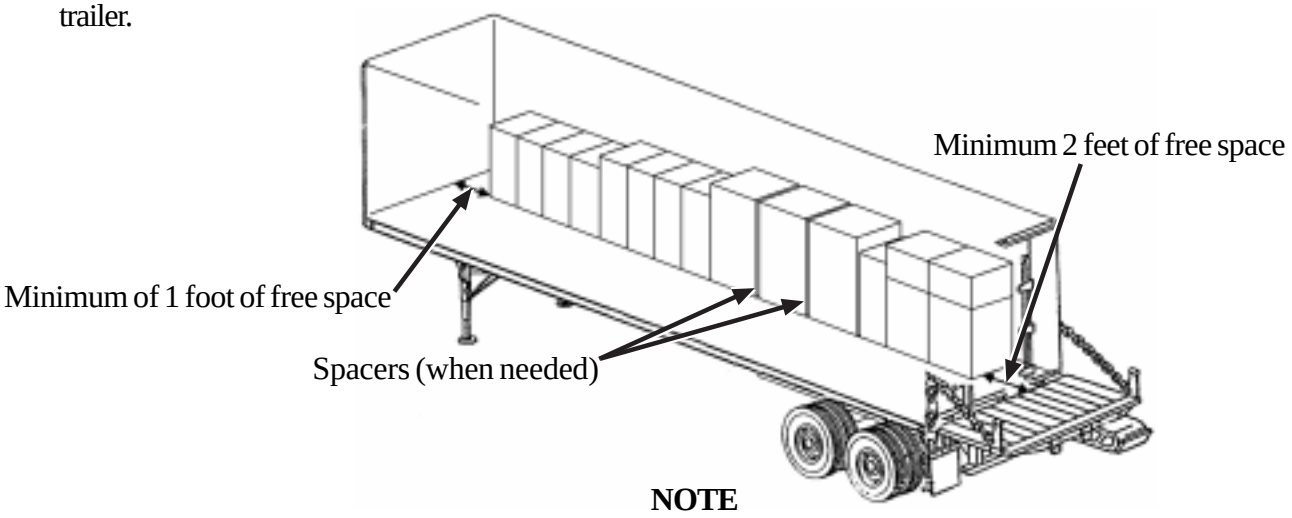

NOTE

Do not drill through the M129A4 semitrailer's side walls or floor. Restrict drilling and fasteners to the tapping plates and inner wall only.

B. GENERAL CABINET INSTALLATION GUIDELINES

1. Each cabinet should be fastened to the floor or cabinet below it, see para. E and F.
2. Each cabinet should be fastened to the metal side-wall tapping plates, see para. G.
3. Each cabinet should be fastened to adjacent cabinets, see para. H.
4. All fastening hardware should be zinc plated.
5. Remove drawers and shelves to gain access for drilling and fastening.
6. Paint all fastener hardware used.

C. CABINET BASE PREPARATION

1. The cabinet bases should be drilled prior to moving the cabinets into the semitrailer. Care must be exercised to ensure that the 7/16 inch (1.11cm) and 1 inch (2.54cm) diameter holes are drilled in the proper location. You must ensure that the location selected allows adequate space for the fastener's head and washer to rest flatly on the lower layer of the cabinet's base. Holes should be drilled in the four corners of each cabinet's base. Holes should be within 2 inch (5.08cm) of the cabinet sides.
2. For floor mounted cabinets, the location selected must also allow for easy drilling of the floor after the cabinets are located within the van/trailer. The holes in the base of the cabinet must be located so as to allow easy access for drilling the 9/32 inch (.281cm) diameter hole into the semitrailer hardwood floor. This hole needs to be 90 degrees to the floor and in the center of the 7/16 inch (1.11cm) diameter hole.
3. For stacked cabinets, the location selected must also allow for easy drilling of the 7/16 inch (1.11cm) diameter hole into the lower cabinet and satisfactory location of the fasteners in both cabinets. Leave enough room for the head of the fastener, washers, and a nut when locating/drilling the four corner fastening points.
4. Locate a position near the corner but accessible with a drill. Area selected must be where the cabinet will be in direct contact with the floor or cabinet below it. The cabinet may have two layers of sheet metal separated by an air space. If this is the case, you must drill through both layers of sheet metal. Drill a 7/16 inch (1.11cm) diameter hole through the base of the cabinet at each of the cabinet's four corners.

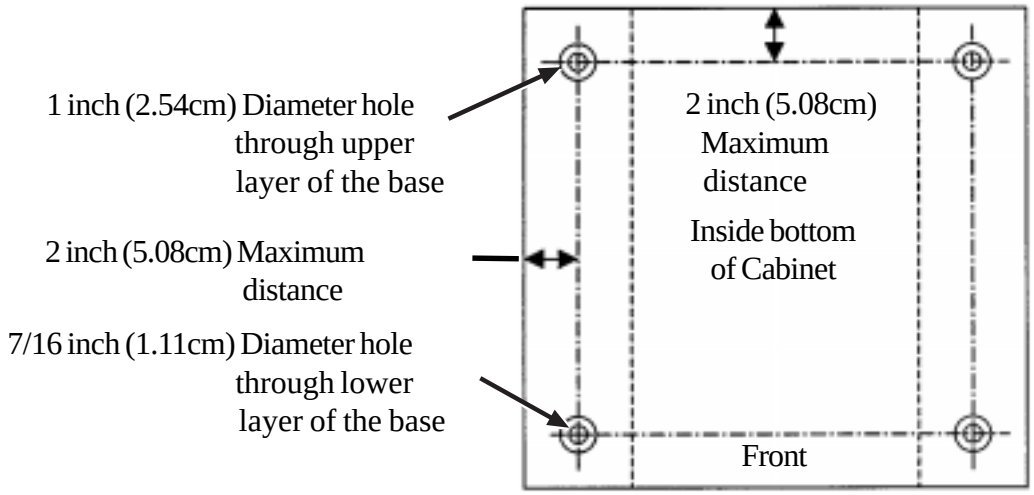

Typical holes and hole locations for each cabinet's base

5. If the cabinet being installed has a double layer base, then perform this step. The 7/16 inch (1.11cm) diameter hole in the upper layer (sheet metal) needs to be enlarged to allow a washer and the head of the fastener to pass through. Drill or cut this hole to approximately a 1 inch (2.54cm) diameter.

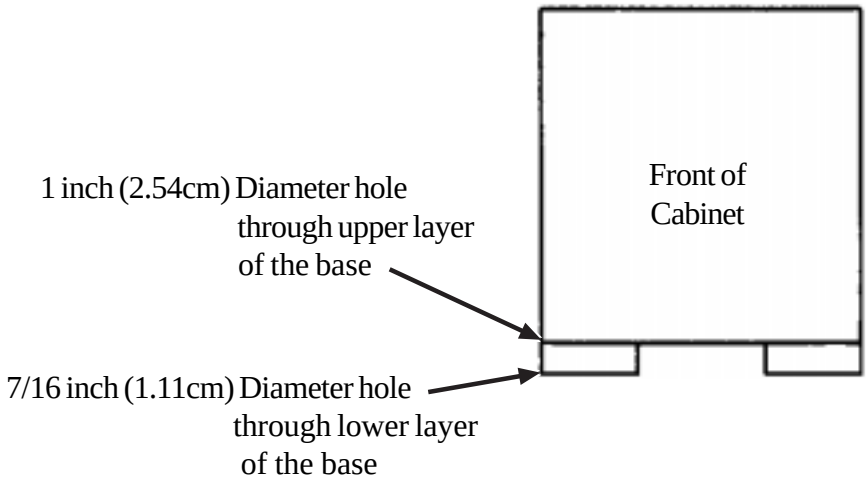

Cabinet Base Drilling

D. CABINET LAYOUT

1. Position the cabinets in the semitrailer at the desired locations. The base of each cabinet should sit flat on the floor. The back of each cabinet should be parallel to, and be pushed up against, one of the semitrailer's sidewalls. Adjacent cabinets should be placed uptight against one another when possible. Cabinets may be stacked per manufacturer's recommendations. Stacked cabinets should be positioned similarly to the floor units.
2. After all cabinets are positioned, verify that each cabinet functions properly. All doors and drawers should open freely, and not interfere with an adjacent cabinet.
3. Some instances, due to certain cabinet styles, may require that a small amount of free space be provided between adjacent cabinets. In those instances, wood or composite spacers should be used between the adjacent cabinets. Spacers should be at least 2 inches (5.08cm) wide, 6 inches (15.24cm) long, and the proper thickness to allow proper cabinet functioning. Full-length spacers are the preferred approach.

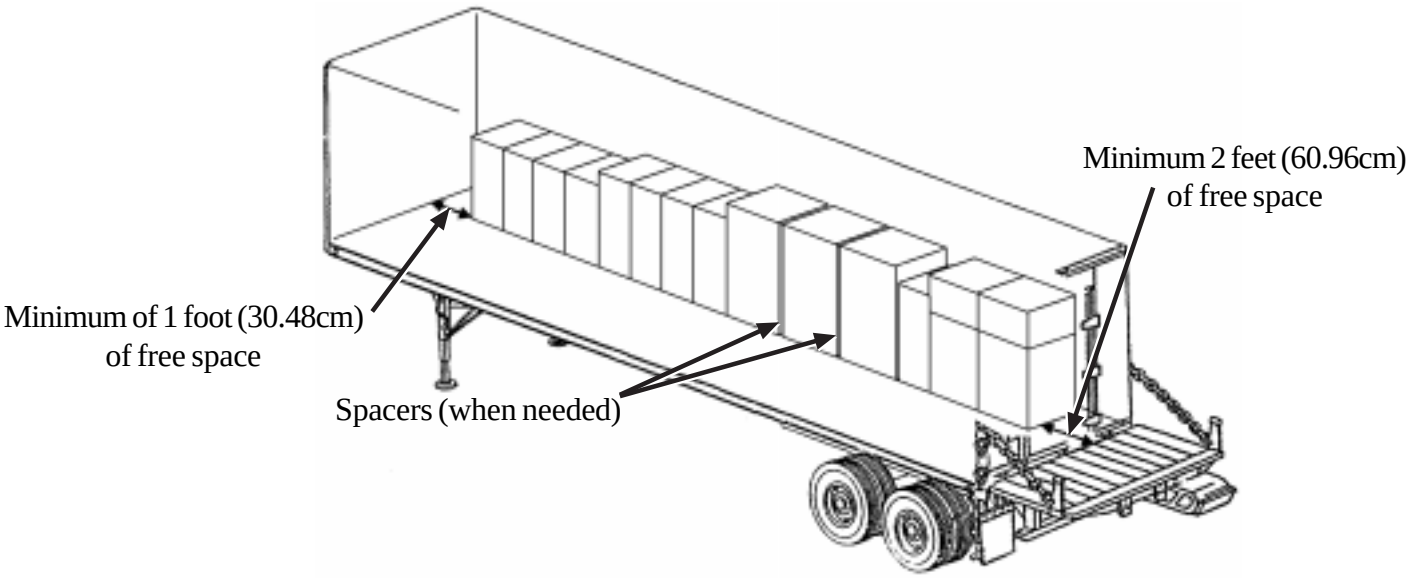

E. FASTENING CABINET BASE TO VAN-BODY HARDWOOD FLOOR

1. Locate the 7/16 Inch (1.11cm) diameter hole in the four corners of the base of the cabinet. Using a center punch and hammer, indent the floor in the center of the 7/16 Inch (1.11cm) diameter hole. Carefully drill a 9/32 Inch (.281cm) diameter hole into the floor. Hole should be perpendicular to the floor, and the drill should 90 degrees to the floor to a depth of 1 Inch (2.54cm). Avoid drilling completely through the wood floor.

NOTE

- Do not drill through the semitrailer's side walls or floor. Restrict drilling and fasteners to the inner floor wood only.
- Drill bits drilled through the floor may contact electrical wires or air lines and could possibly damage them.

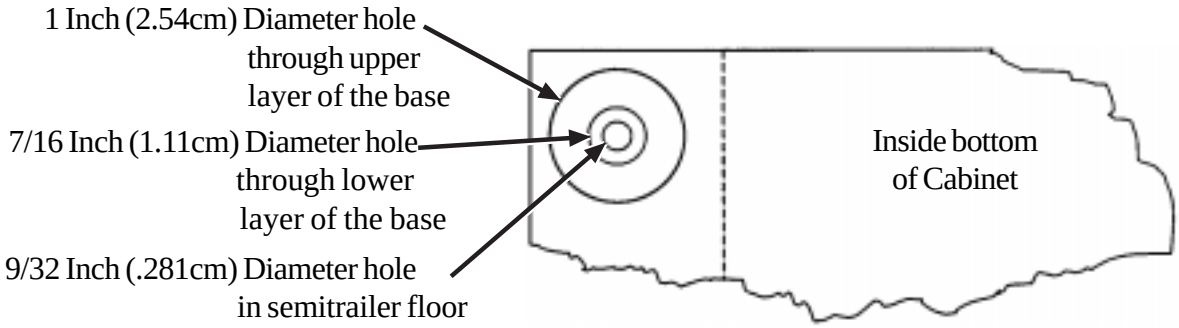

Typical hole pattern for floor mounted cabinets

2. The base of each floor cabinet should be securely fastened to the floor in each corner. Use a 3/8 Inch (.953cm) diameter lag bolt by 1 1/4 Inch (3.175cm) long, and a 3/8 Inch (.953cm) diameter heavy-duty washer for each corner. The lag bolt with washer shall be installed through the 7/16 Inch (1.11cm) diameter hole and in to the 9/32 Inch (.281cm) diameter hole. Fasten each lag bolt securely. A total of four fasteners should be used.

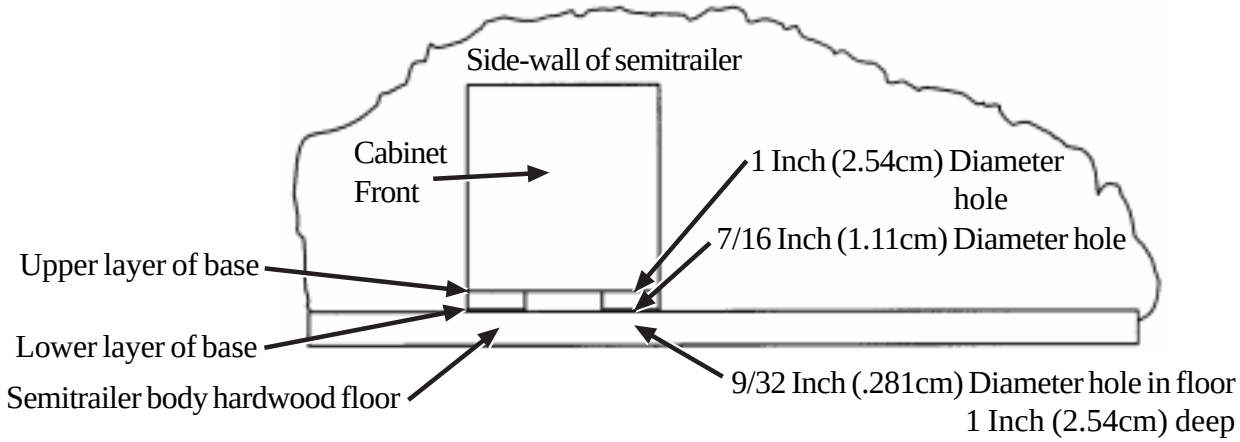

Cabinet to floor installation

F. FASTENING UPPER CABINET BASE TO LOWER CABINET TOP

1. Locate the 7/16 Inch (1.11cm) diameter hole in the four corners of the base of the upper cabinet.
2. Using this hole as a guide, carefully drill a 7/16 Inch (1.11cm) diameter hole through sheet metal on the top of the lower cabinet.
3. The base of each stacked cabinet should be securely fastened, in each corner, to the cabinet below it. Use a 3/8 Inch (.953cm) diameter hexagon-cap screw, length as required, two 3/8 Inch (.953cm) diameter heavy-duty flat washers, and a 3/8 Inch (.953cm) lock nut. The hexagon-cap screw with one flat washer should be installed through the 7/16 Inch (1.11cm) diameter hole and into the lower cabinet. The other flat washer and lock nut should be securely tightened on to the hexagon-cap screw. A total of four fasteners should be used. (A standard 3/8 Inch (.953cm) lock washer and a 3/8 Inch (.953cm) standard nut may be used in place of the lock nut.)

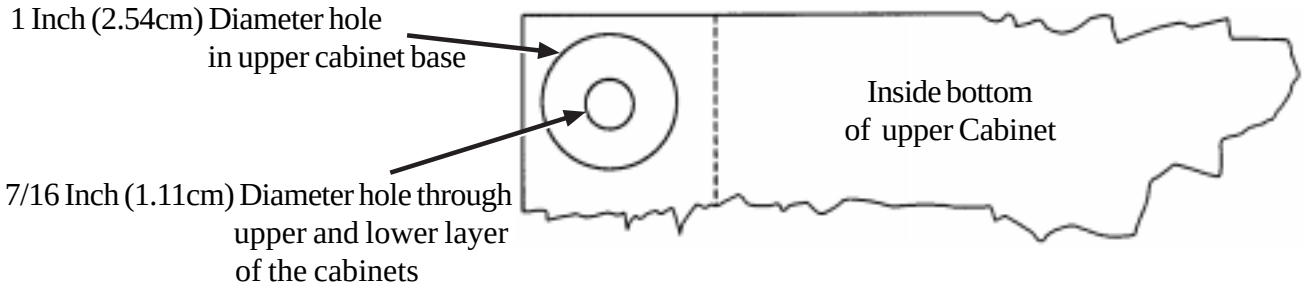

Typical hole pattern for upper to lower cabinet installations

G. FASTENING BACK OF CABINET TO TRAILER SIDE-WALL

1. The back wall of each cabinet should be securely fastened to the semitrailer's side-wall tapping plates. Two fasteners should be used for each tapping plate that passes behind the cabinet. Location for fasteners should be centered on the tapping plate and within 2 Inch (5.08cm) of the cabinet sides.
2. Drill a 9/32 Inch (.281cm) diameter hole through the back of the cabinet and through the tapping plate.

NOTE

Do not drill deeper than 3/4 Inch (1.905cm) into the semitrailers side-wall or through the semitrailer side-wall

3. Perform this operation for each of the required fastening locations. Securely fasten back of cabinet to the trailer's side-wall tapping plates using a 5/16 Inch (.794cm) diameter hexagon-cap self-tapping screw 3/4 Inch (1.905cm) long, a 5/16 Inch (.794cm) diameter heavy duty washer, and a 5/16 Inch (.794cm) diameter fender washer. Insert the hexagon-cap self-tapping screw through the heavy-duty flat washer, through the fender washer, through the back of the cabinet, and then, into the 9/32 Inch (.281cm) diameter hole. Securely fasten the cabinet to the tapping plate. At least two fasteners should be used for each cabinet.

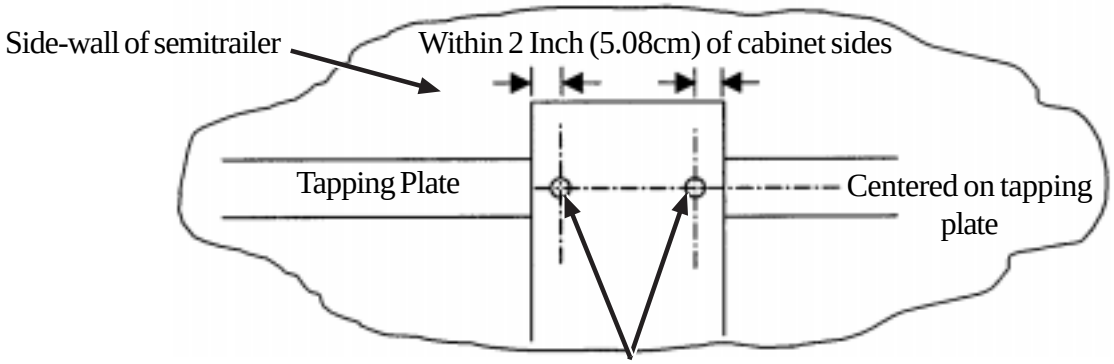

H. FASTENING OF ADJACENT CABINETS

1. Fasten adjacent cabinets together through their side-walls. Two fasteners should be used. One near the upper corner and one near the lower corner, within 2 Inches (5.08cm) of the cabinet's front.
2. In those instances where cabinets must be separated with a spacer, the fastener must also pass through the spacer.
3. Drill a 5/16 Inch (.794cm) diameter hole through both adjacent cabinet side-walls and spacer if used. Holes should be drilled within 2 Inches (5.08cm) of the cabinet's upper and lower corners.
4. Securely fasten adjacent cabinets to one another using 1/4 Inch (.635cm) diameter hexagon-cap screws length as needed, two heavy duty 1/4 Inch (.635cm) diameter washers, two 1/4 Inch (.635cm) diameter fender washers, and a 1/4 Inch (.635cm) lock nut or a 1/4 Inch (.635cm) lock washer and 1/4 Inch (.635cm) standard nut. Insert the hexagon-cap screw through the heavy-duty flat washer, through the fender washer, and through the 5/16 Inch (.794cm) diameter hole in the sides of the cabinets (also through the spacer if one is used). The remaining fender washer, flat washer and lock nut should be securely tightened on to the hexagon-cap screw. At least two fasteners should be used for each cabinet. A standard 1/4 Inch (.635cm) lock washer and standard 1/4 Inch (.635cm) nut may be used in place of the lock nut.

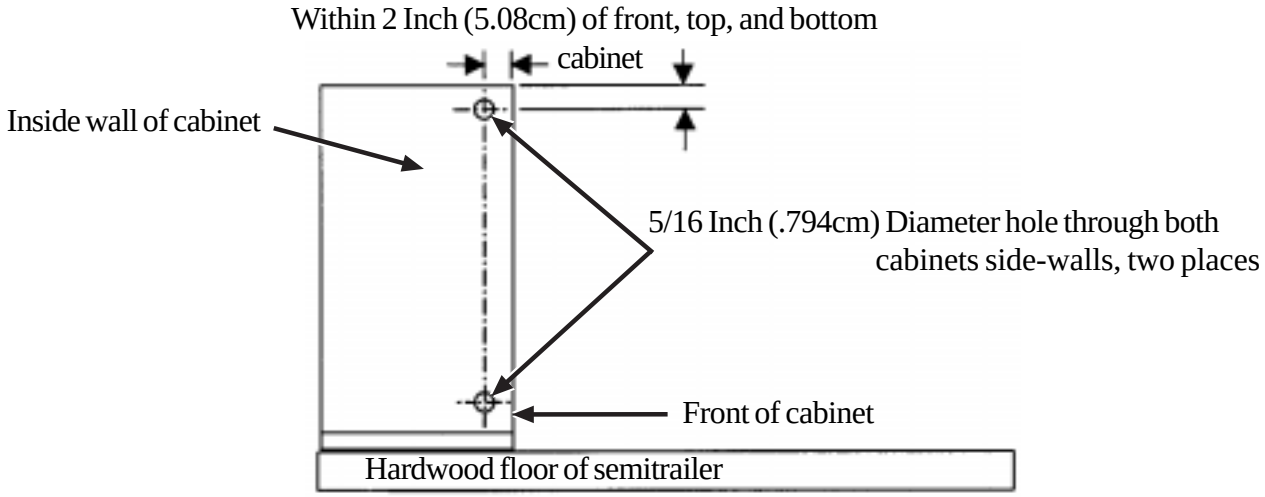

Fastening adjacent cabinets

I. FINAL TOUCH-UP and INSPECTION

Upon completion of installing all the cabinets in a semitrailer, perform the following;

1. Verify that all cabinets function properly.
2. Verify that all fasteners are in place and are tightened.
3. Look under the trailer for any protruding holes or fasteners. Fill any holes with wood putty and undercoat any repaired/filled holes or exposed lag bolts.
4. Cleaning, priming and painting of all fasteners used for fastening the cabinets to the floor, wall, and each other. Painting will help prevent corrosion from attacking the fasteners.

Index

Subject **Page**

A

Subject **Page**

Subject **Page**

Subject **Page**

Subject **Page**

C

Subject **Page**

Subject **Page**

Subject **Page**

Subject **Page**

I

Subject **Page**

Subject **Page**

Subject **Page**

M

Subject **Page**

Subject **Page**

R

Subject **Page**

Subject **Page**

Subject **Page**

Subject **Page**

Subject **Page**

W

RECOMMENDED CHANGES TO EQUIPMENT TECHNICAL PUBLICATIONS

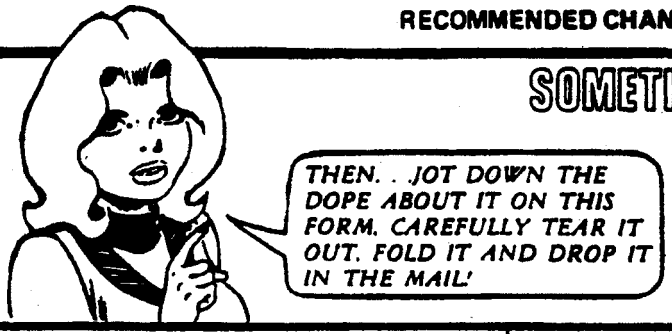

SOMETHING WRONG WITH THIS PUBLICATION?

FROM: (PRINT YOUR UNIT'S COMPLETE ADDRESS)

Your mailing address

DATE SENT

Date you fill out this form

PUBLICATION NUMBER	PUBLICATION DATE	PUBLICATION TITLE
TM 9-2330-380-14&P	29 MAR 00	Unit,DS/GS Maintenance & RPSTL for XM1063 & 129A4 Semitrailers

BE EXACT. PIN-POINT WHERE IT IS

PAGE NO	PARA-GRAPH	FIGURE NO	TABLE NO	IN THIS SPACE TELL WHAT IS WRONG AND WHAT SHOULD BE DONE ABOUT IT:
3		2		Item 10. Change illustration. Reason: Tube end shown assembled on wrong side of lever cam.
109		51		Item 3. The NSN and P/N are not listed on the AMDF nor the MCRL. Request correct NSN and P/N be furnished.
2-8			2-1	Preventive Maintenance Checks and Services. Item 7 under "Items to be inspected" should be changed to read as follows: Firing linkage and firing mechanism pawl.
12	1-6a			Since there are both 20- and 30- round magazines for this rifle, data on both should be listed.

SAMPLE

PRINTED NAME, GRADE OR TITLE, AND TELEPHONE NUMBER

SIGN HERE:

DA FORM 1 JUL 79 2028-2

PREVIOUS EDITIONS ARE OBSOLETE.

P.S.--IF YOUR OUTFIT WANTS TO KNOW ABOUT YOUR RECOMMENDATION MAKE A CARBON COPY OF THIS AND GIVE IT TO YOUR HEADQUARTERS.

RECOMMENDED CHANGES TO PUBLICATIONS AND BLANK FORMS For use of this form, see AR 25-30; the proponent agency is OAASA	Use Part II *(reverse)* for Repair Parts and Special Tool Lists (RPSTL) and Supply Catalogs/Supply Manuals (SC/SM).	DATE
TO: *(Forward to proponent of publication or form) (Include ZIP Code)*	**FROM:** *(Activity and location) (Include ZIP Code)*	

PART I - ALL PUBLICATIONS (EXCEPT RPSTL AND SC/SM) AND BLANK FORMS

PUBLICATION/FORM NUMBER	DATE	TITLE

ITEM	PAGE	PARA-GRAPH	LINE	FIGURE NO.	TABLE	RECOMMENDED CHANGES AND REASON

** Reference to line numbers within the paragraph or subparagraph.*

TYPED NAME, GRADE OR TITLE	TELEPHONE EXCHANGE/AUTOVON, PLUS EXTENSION	SIGNATURE

TO: *(Forward direct to addressee listed in publication)*	FROM: *(Activity and location) (Include ZIP Code)*	DATE

PART II - REPAIR PARTS AND SPECIAL TOOL LISTS AND SUPPLY CATALOGS/SUPPLY MANUALS

PUBLICATION NUMBER	DATE	TITLE

PAGE NO.	COLM NO.	LINE NO.	NATIONAL STOCK NUMBER	REFERENCE NO.	FIGURE NO.	ITEM NO.	TOTAL NO. OF MAJOR ITEMS SUPPORTED	RECOMMENDED ACTION

PART III - REMARKS *(Any general remarks or recommendations, or suggestions for improvement of publications and blank forms. Additional blank sheets may be used if more space is needed.)*

TYPED NAME, GRADE OR TITLE	TELEPHONE EXCHANGE/AUTOVON, PLUS EXTENSION	SIGNATURE

USAPA V3.01

RECOMMENDED CHANGES TO PUBLICATIONS AND BLANK FORMS For use of this form, see AR 25-30; the proponent agency is OAASA	Use Part II *(reverse)* for Repair Parts and Special Tool Lists (RPSTL) and Supply Catalogs/Supply Manuals (SC/SM).	DATE
TO: *(Forward to proponent of publication or form) (Include ZIP Code)*	**FROM:** *(Activity and location) (Include ZIP Code)*	

PART I - ALL PUBLICATIONS (EXCEPT RPSTL AND SC/SM) AND BLANK FORMS

PUBLICATION/FORM NUMBER	DATE	TITLE

ITEM	PAGE	PARA-GRAPH	LINE	FIGURE NO.	TABLE	RECOMMENDED CHANGES AND REASON

** Reference to line numbers within the paragraph or subparagraph.*

TYPED NAME, GRADE OR TITLE	TELEPHONE EXCHANGE/AUTOVON, PLUS EXTENSION	SIGNATURE

TO: *(Forward direct to addressee listed in publication)*	FROM: *(Activity and location) (Include ZIP Code)*	DATE

PART II - REPAIR PARTS AND SPECIAL TOOL LISTS AND SUPPLY CATALOGS/SUPPLY MANUALS

PUBLICATION NUMBER	DATE	TITLE

PAGE NO.	COLM NO.	LINE NO.	NATIONAL STOCK NUMBER	REFERENCE NO.	FIGURE NO.	ITEM NO.	TOTAL NO. OF MAJOR ITEMS SUPPORTED	RECOMMENDED ACTION

PART III - REMARKS *(Any general remarks or recommendations, or suggestions for improvement of publications and blank forms. Additional blank sheets may be used if more space is needed.)*

TYPED NAME, GRADE OR TITLE	TELEPHONE EXCHANGE/AUTOVON, PLUS EXTENSION	SIGNATURE

USAPA V3.01

RECOMMENDED CHANGES TO PUBLICATIONS AND BLANK FORMS For use of this form, see AR 25-30; the proponent agency is OAASA	Use Part II *(reverse)* for Repair Parts and Special Tool Lists (RPSTL) and Supply Catalogs/Supply Manuals (SC/SM).	DATE
TO: *(Forward to proponent of publication or form) (Include ZIP Code)*	**FROM:** *(Activity and location) (Include ZIP Code)*	

PART I - ALL PUBLICATIONS (EXCEPT RPSTL AND SC/SM) AND BLANK FORMS

PUBLICATION/FORM NUMBER	DATE	TITLE

ITEM	PAGE	PARA-GRAPH	LINE	FIGURE NO.	TABLE	RECOMMENDED CHANGES AND REASON

** Reference to line numbers within the paragraph or subparagraph.*

TYPED NAME, GRADE OR TITLE	TELEPHONE EXCHANGE/AUTOVON, PLUS EXTENSION	SIGNATURE

TO: *(Forward direct to addressee listed in publication)*	FROM: *(Activity and location) (Include ZIP Code)*	DATE

PART II - REPAIR PARTS AND SPECIAL TOOL LISTS AND SUPPLY CATALOGS/SUPPLY MANUALS

PUBLICATION NUMBER	DATE	TITLE

PAGE NO.	COLM NO.	LINE NO.	NATIONAL STOCK NUMBER	REFERENCE NO.	FIGURE NO.	ITEM NO.	TOTAL NO. OF MAJOR ITEMS SUPPORTED	RECOMMENDED ACTION

PART III - REMARKS *(Any general remarks or recommendations, or suggestions for improvement of publications and blank forms. Additional blank sheets may be used if more space is needed.)*

TYPED NAME, GRADE OR TITLE	TELEPHONE EXCHANGE/AUTOVON, PLUS EXTENSION	SIGNATURE

USAPA V3.01

By Order of the Secretary of the Army:

PETER J. SCHOOMAKER
General, United States Army
Chief of Staff

Official:

SANDRA R. RILEY
Administrative Assistant to the
Secretary of the Army

0508104

DISTRIBUTION: To be distributed in accordance with the Initial Distribution Number (IDN) 390865, requirements for TM 9-2330-380-14&P.

THE METRIC SYSTEM AND EQUIVALENTS

LINEAR MEASURE
1 Centimeter = 10 Millimeters = 0.01 Meters = 0.3937 Inches
1 Meter = 100 Centimeters = 1,000 Millimeters = 39.37 Inches
1 Kilometer = 1,000 Meters = 0.621 Miles

WEIGHTS
1 Gram = 0.001 Kilograms = 1,000 Milligrams = 0.035 Ounces
1 Kilogram = 1,000 Grams = 2.2 Lb
1 Metric Ton = 1,000 Kilograms = 1 Megagram = 1.1 Short Tons

LIQUID MEASURE
1 Milliliter = 0.001 Liters = 0.0338 Fluid Ounces
1 Lilter = 1,000 Millimeters = 33.82 Fluid Ounces

SQUARE MEASURE
1 Sq Centimeter = 100 Sq Millimeters = 0.155 Sq Inches
1 Sq Meter = 10,000 Sq Centimeters = 10.76 Sq Feet
1 Sq Kilometer = 1,000,000 Sq Meters = 0.386 Sq Miles

CUBIC MEASURE
1 Cu Centimeter = 1,000 Cu Millimeters = 0.06 Cu Inches
1 Cu Meter = 1,000,000 Cu Centimeters = 35.31 Cu Feet

TEMPERATURE
5/9 (°F - 32) = °C
212° Fahrenheit is equivalent to 100° Celsius
90° Fahrenheit is equivalent to 32.2° Celsius
32° Fahrenheit is equivalent to 0° Celsius
9/5 °C + 32 = °F

APPROXIMATE CONVERSION FACTORS

TO CHANGE	TO	MULTIPLY BY
Inches	Centimeters	2.540
Feet	Meters	0.305
Yards	Meters	0.914
Miles	Kilometers	1.609
Square Inches	Square Centimeters	6.451
Square Feet	Square Meters	0.093
Square Yards	Square Meters	0.836
Square Miles	Square Kilometers	2.590
Acres	Square Hectometers	0.405
Cubic Feet	Cubic Meters	0.028
Cubic Yards	Cubic Meters	0.765
Fluid Ounces	Milliliters	29.573
Pints	Liters	0.473
Quarts	Liters	0.946
Gallons	Liters	3.785
Ounces	Grams	28.349
Pounds	Kilograms	0.454
Short Tons	Metric Tons	0.907
Pound-Feet	Newton•Meters	1.356
Pounds Per Square Inch	Kilopascals	6.895
Miles Per Gallon	Kilometers Per Liter	0.425
Miles Per Hour	Kilometers Per Hour	1.609

TO CHANGE	TO	MULTIPLY BY
Centimeters	Inches	0.394
Meters	Feet	3.280
Meters	Yards	1.094
Kilometers	Miles	0.621
Square Centimeters	Square Inches	0.155
Square Meters	Square Feet	10.764
Square Meters	Square Yards	1.196
Square Kilometers	Square Miles	0.386
Square Hectometers	Acres	2.471
Cubic Meters	Cubic Feet	35.315
Cubic Meters	Cubic Yards	1.308
Milliliters	Fluid Ounces	0.034
Liters	Pints	2.113
Liters	Quarts	1.057
Liters	Gallons	0.264
Grams	Ounces	0.035
Kilograms	Pounds	2.205
Metric Tons	Short Tons	1.102
Newton•Meters	Pound-Feet	0.738
Kilopascals	Pounds Per Square Inch	0.145
Kilometers Per Liter	Miles Per Gallon	2.354
Kilometers Per Hour	Miles Per Hour	0.621

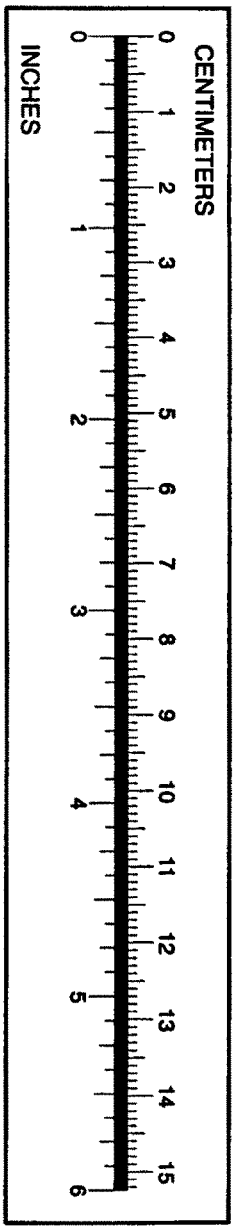

PIN: 065460-000