OPERATOR, UNIT, AND DIRECT SUPPORT MAINTENANCE MANUAL WITH REPAIR PARTS AND SPECIAL TOOLS LIST

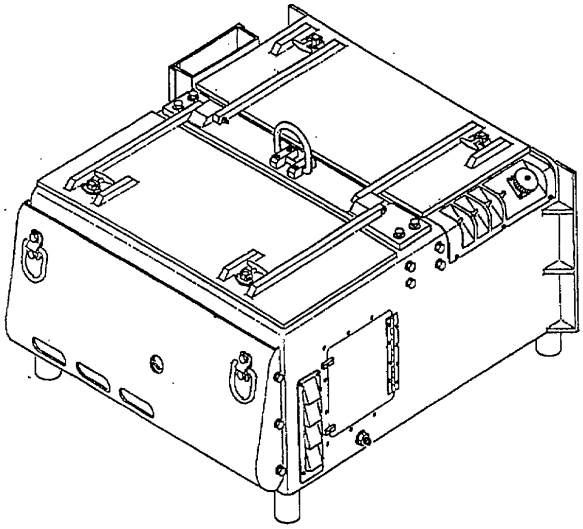

5KW, 28VDC, AUXILIARY POWER UNIT (APU) MEP 952B
NSN 6115-01-452-6513 (EIC: N/A)

DISTRIBUTION STATEMENT A: Approved for public release; distribution is unlimited.

HEADQUARTERS, DEPARTMENT OF THE ARMY

1 NOVEMBER 2000

WARNING SUMMARY

The following safety precautions are for personnel to understand and apply during many phases of operation and maintenance. Disregard of these warnings and precautionary information can result in serious injury or death.

Warning statements have been strategically placed throughout this manual prior to the operating or maintenance procedures considered essential to the protection of personnel. Prior to starting any task the warning included in the text for that task must be reviewed and followed.

This manual describes physical and chemical processes which may require the use of chemicals, solvents, paints, or other commercially available material. The user of this manual should obtain the material safety data sheets (Occupational Safety and Heath Act (OSHA) Form 20 or equivalent) from the manufacturer or suppliers of materials to be used. The user must be completely familiar with the manufacturer/supplier information and adhere to the procedures, recommendations, warnings, and cautions of the manufacturer/supplier for the safe use, handling, storage, and disposal of these materials.

WARNING

Operating personnel must observe every safety regulation at all times. Do not replace components or make adjustments inside the equipment with the voltage supply turned on. Dangerous potentials may exist under certain conditions when the power control is in the off position. Avoid casualties by always removing power and discharging and grounding a circuit before touching it.

WARNING

High current is produced when the unit is in operation. Use care when working around an open control panel with the APU operating. Improper operation and/or failure to follow this warning could result in personal injury or death by electrocution.

WARNING

Never attempt to start the APU if it is not properly grounded. Failure to observe this warning could result in serious injury or death by electrocution.

WARNING

DC voltages are present at APU electrical components even with the APU shut down. Avoid shorting any positive terminal with ground / negative. Failure to observe this warning can result in personal injury and equipment damage.

WARNING

Never attempt to connect or disconnect load cables while the unit is running. Failure to observe this warning could result in severe personal injury or death by electrocution and equipment damage.

WARNING

Never reach into the enclosure to service or adjust the equipment alone. Make sure to work with someone who can render aid in case of an emergency.

WARNING

Exhaust discharge from APU contains deadly gases. Do not operate APU in enclosed area unless exhaust discharge is properly vented outside. Position as far away from personnel, shelters, and occupied vehicles as possible. Failure to observe this warning can result in severe personal injury or death due to carbon monoxide poisoning.

FOR ARTIFICIAL RESPIRATION, REFER TO FM 21-11.

THE BEST DEFENSE AGAINST CARBON MONOXIDE POISONING IS GOOD VENTILATION.

WARNING

The fuels used in this general set are flammable. Do not smoke or use open flame during operation and maintenance. Failure to observe this warning can result in severe personal injury or death and equipment damage due to potential flame and explosion.

WARNING

Fuel from spray orifice may be under high pressure and can penetrate Clothing and skin. Always direct fuel injection nozzle tip away from personnel. Wear protective goggles and properly relieve fuel pressure before working on the fuel system. Failure to observe this warning can result in personal injury.

WARNING

If diesel fuel is injected into skin, seek medical attention immediately. Failure to observe this warning can result in severe personal injury.

WARNING

Cleaning solvents are flammable and toxic to eyes, skin, and respiratory tract. Skin and eye protections are required when working in contact with cleaning solvents. Avoid repeated or prolonged contact. Work in well-ventilated area only. Keep away from heat, sparks, and open flame, and do not smoke while using cleaning solvents. Failure to observe this warning can cause injury to personnel.

WARNING

Cleaning with compressed air can cause flying particles. Wear protective glasses and use clean, low pressure air of less than 30 psi (206.8 kPa). Failure to observe this warning can result in eye injury.

WARNING

The adhesives used in maintenance of the APU (see Appendix E) are flammable and toxic. Vapors may ignite explosively. Avoid breathing in vapors. Provide adequate ventilation to prevent vapor concentrations in excess of permissible exposure levels. Keep away from heat, sparks, and open flame. Do not smoke. Extinguish all flames and turn off non-explosion-proof electrical equipment during use until vapors are dissipated. Close containers tightly after use. Failure to observe this warning can result in personal injury.

WARNING

Avoid contacting metal items with bare skin in extreme cold weather. Failure to observe this warning can result in personal injury.

WARNING

Metal jewelry can conduct electricity. Remove metal jewelry when working on electrical system or components. Failure to observe this warning can result in severe personal injury from electric shock.

WARNING

Jewelry and other loose and dangling articles and clothing can be caught in moving parts. Remove jewelry and loose and dangling articles and clothing before working on the APU. Failure to observe this warning can result in personal injury.

WARNING

Adhere to the manual regarding lifting restriction. Do not lift heavy objects over personnel. Do not stand in the operating area of a lifting device. Failure to observe this warning can result in severe personal injury and/or equipment damage.

WARNING

Disconnect electrical cable from NATO receptacle before performing maintenance on the electrical system. Failure to do so can result in electrical shock.

WARNING

CARC paint dust is a health hazard. Wear protective eyewear, mask, and gloves when sanding CARC painted surfaces. Failure to comply can cause personal injury.

LIST OF EFFECTIVE PAGES

INSERT LATEST CHANGED PAGES: DESTROY SUPERCEDED PAGES.

NOTE: The portion of the text affected by the changes is indicated by a vertical line in the outer margins of the page. Changes to illustrations are indicated by miniature pointing hands. Changes to wiring diagrams are indicated by shaded areas.

Date of issue for original and change pages are:

Original ..... 0 .....01 Nov 2000

Page No.	*Change No.	Page No.	*Change No.	Page No.	*Change No.
Cover	0	B-1 thru B-8	0	FP-5/(FP-6 blank)	0
a thru d	0	C-1 thru C-2	0	FP-7/(FP-8 blank)	0
A	0	D-1	0	FP-9/(FP-10 blank)	0
B blank	0	D-2 blank	0	FP-11(FP-12 blank)	0
i thru ix	0	E-1 thru E-2	0		
1-0 thru 1-22	0	F-1 thru F-2	0		
2-1 thru 23	0	G-1 thru G-124	0		
2-24 blank	0	H-1 thru H-3	0		
3-1 thru 3-12	0	H-4 blank	0		
4-1 thru 4-132	0	I-1	0		
5-1 thru 5-59	0	I-2 blank	0		
5-60 blank	0	Index-1 thru Index-6	0		
A-1	0	FP-1/(FP-2 blank)	0		
A-2 blank	0	FP-3/(FP-4 blank)	0		

***. Zero in this column indicates an original page.**

Technical Manual

No. 9-6115-664-13&P

HEADQUARTERS
DEPARTMENT OF THE ARMY
Washington, DC, 1 November 2000

OPERATOR, UNIT, AND DIRECT SUPPORT MAINTENANCE MANUAL WITH REPAIR PARTS AND SPECIAL TOOLS LIST

FOR

5KW, 28VDC, AUXILIARY POWER UNIT (APU) MEP-952B
(NSN 6115-01-452-6513)(EIC: N/A)

REPORTING ERRORS AND RECOMMENDING IMPROVEMENTS

You can help improve this manual. If you find any mistakes, or if you know of a way to improve the procedures, please let us know. Mail your letter, DA Form 2028 (Recommended Changes to Publications and Blank Forms) or DA Form 2028-2 located in back of this manual direct to: Commander, US Army Communications-Electronics Command and Fort Monmouth, ATTN: AMSEL-LC-LEO-D-CS-CFO, Fort Monmouth, New Jersey 07703-5000. The fax number is 732-532-1413, DSN 992-1413. You may also e-mail your recommendations to AMSEL-LC-LEO-PUBS-CHG@cecom3.monmouth.army.mil.

In either case a reply will be furnished direct to you.

TABLE OF CONTENTS

TABLE OF CONTENTS

LIST OF ILLUSTRATIONS

LIST OF ILLUSTRATIONS - continued

LIST OF TABLES

How to Use This Manual

1. DESCRIPTION OF THE MANUAL.

a. **Front Cover Index.** The front cover of this manual contains an index to allow for quick and easy access to the most frequently used sections of the manual. This index is located along the right side of the cover. The boxed section headings on the cover match boxed section headings in the Table of Contents (see page i).

b. Each box on the front cover has a black tab on the right. This tab lines up with a matching tab on the first page of the indexed section. To locate the section you're looking for, match the black tabs and open to that page in the manual.

c. **Chapter Organization.** This manual has five chapters covering; introductory information, operating instructions, operator maintenance procedures, unit maintenance instructions, and direct support maintenance instructions. Each chapter is divided into sections. These sections contain the operation, cleaning, inspection, troubleshooting, and repair tasks appropriate for the specific maintenance level.

(1) Chapter 1 - Introduction. Chapter 1 contains general information, equipment description, and technical principles of operation.

(2) Chapter 2 - Operating Instructions. Chapter 2 contains a description of APU controls and indicators. The local and remote control panel assemblies are illustrated and each control and indicator is described in a table. Operating procedures are detailed, including operator level Preventive Maintenance Checks and Services (PMCS), operation under usual conditions, and operation under unusual conditions.

(3) Chapter 3 - Operator Maintenance Instructions. Chapter 3 contains the maintenance procedures authorized at the operator level. Included are troubleshooting procedures useful in recognizing APU malfunctions, tests and inspections, and corrective actions.

(4) Chapter 4 - Unit Maintenance Instructions. Chapter 4 contains unit level maintenance instructions, including servicing, PMCS, troubleshooting, and unit level corrective maintenance.

(5) Chapter 5 - Direct Support Maintenance Instructions. Chapter 5 contains direct support level maintenance instructions, including troubleshooting and direct support level corrective maintenance.

d. **Paragraph and Task Numbering.** All paragraphs and maintenance tasks are numbered. This helps you find what you need when you need it. Use the Table of Contents (page i) or alphabetical index (at the back of the manual) to find the paragraph or task you need.

e. **Appendices.** The appendices in this manual contain both general maintenance information and specific data for this generator set. They list reference manuals and materials, components of the generator set, additional authorization list items, repair parts and special tools, expendable supplies and materials, lubrication instructions, torque limits, and mandatory replacement parts. Refer to the Table of Contents (page ii) for a complete list of the appendices used in this manual.

2. HOW TO FIX A GENERATOR SET MALFUNCTION.

a. **Determining the Cause.** Figuring out the cause of the malfunction, or troubleshooting, is the first step in fixing the generator set and returning it to operation. Follow these steps to determine the root of your problem:

(1) Turn to the Table of Contents section in this manual (page i).

(2) Locate "Troubleshooting" for your maintenance level and turn to the page indicated.

(3) In the Troubleshooting section, find the troubleshooting logic tree for the component affected by the malfunction. Refer to the Symptom Index for help.

NOTE

If the specific symptom is not addressed, the maintenance required is most likely more detailed than authorized for your level. Notify personnel at a higher maintenance level.

(4) Begin troubleshooting at the box on top of the page. Carefully work your way down through the troubleshooting tree to try and determine what the problem is.

(5) Once the trouble has been determined, go to the maintenance task called out in the logic tree. Remedy the malfunction, test the generator set, and return it to service.

b. **Preparing for a Task.**

NOTE

You must familiarize yourself with the entire maintenance procedure before starting any maintenance task. Ensure all parts, materials, and tools are available. Read through all steps before beginning.

(1) PAY ATTENTION TO WARNINGS, CAUTIONS, AND NOTES.

(2) Maintenance tasks are arranged in a logical disassembly/assembly sequence and address only the component or assembly to be replaced. Locator illustrations are included for removal and installation. These illustrations show you the area of the generator set to be worked on.

(3) All mandatory replacement parts are listed, including gaskets, packings, cotter pins, and lockwashers. They are listed by the Repair Parts and Special Tools List (RPSTL) name. Expendable supplies and support materials are listed, including solvents, rags, grease, and safety wire.

(4) Tools, tool kits or shop sets needed to do the task are listed. If tools from a repairman's kit are needed, the kit is listed. Tools that are not in a kit or set are listed by name, type, and size. Special tools and test equipment are listed by part number.

(5) Related TM's needed to accomplish the task are listed. The steps tell when these TM's are needed.

(6) Read the entire task carefully before starting. DO NOT START A TASK UNTIL:

You know what replacement parts, tools, and supplies are needed

You have the things you need

You understand what to do

You know all applicable safety hazards, warnings, cautions, and risks

c. **How To Do The Task.** Before starting, read the entire task. Familiarize yourself with the entire procedure before you begin the task. The following are considered standard maintenance practices. Instructions about these practices will not normally be included in the task steps. Task steps will tell you when standard maintenance practices do not apply. As you read, remember the following:

(1) Electrical wiring shall be tagged before it is disconnected.

(2) Used packings, retainers, gaskets, cotter pins, lockwashers, and safety wire shall be discarded. Do not reuse. New parts shall be installed.

(3) Packings shall be coated with lubricant before installation in accordance with task instructions.

(4) Disassembly procedures list all steps required to support total authorized repair of a component. You may not need to disassemble a part as far as described in the task. Follow the steps to disassemble as far as required to replace worn or damaged parts.

(5) Before components or the disassembled parts of a component are inspected, they shall be cleaned as required.

(6) Components and mating surface areas shall be inspected for serviceable condition before installation.

(7) When a nut is tightened or loosened on a bolt, the bolt head shall be held with a wrench.

(8) A special torque will be cited when the words TORQUE TO are used in the task. Standard torques are used at all other times. Refer to the Torque Limit appendix for information.

(9) When tightening hardware, observe compliance with the drag torque as required. To determine drag torque, thread nut onto bolt until at least two threads protrude. The nut shall not contact the mating part. The torque required to begin turning the nut is the drag torque.

(10) When a cotter pin is required, cotter pin holes will be aligned within the allowable torque range.

(11) After maintenance, inspect for foreign objects.

NOTE

This manual is divided by maintenance level (operator, unit, and direct support). If you cannot find a generator set malfunction in the troubleshooting section for your maintenance level, or cannot find the appropriate corrective actions in the maintenance section, notify personnel at next higher maintenance level.

3. REPAIR PARTS AND SPECIAL TOOLS LIST.

A Repair Parts and Special Tools List (RPSTL) is included as Appendix G to this manual. The RPSTL contains exploded view illustrations and parts lists keyed to the illustrations. It lists part number, part name, and quantity used in each application. Use the RPSTL to identify and order replacement parts. Refer to Appendix G for detailed information on how to use the RPSTL.

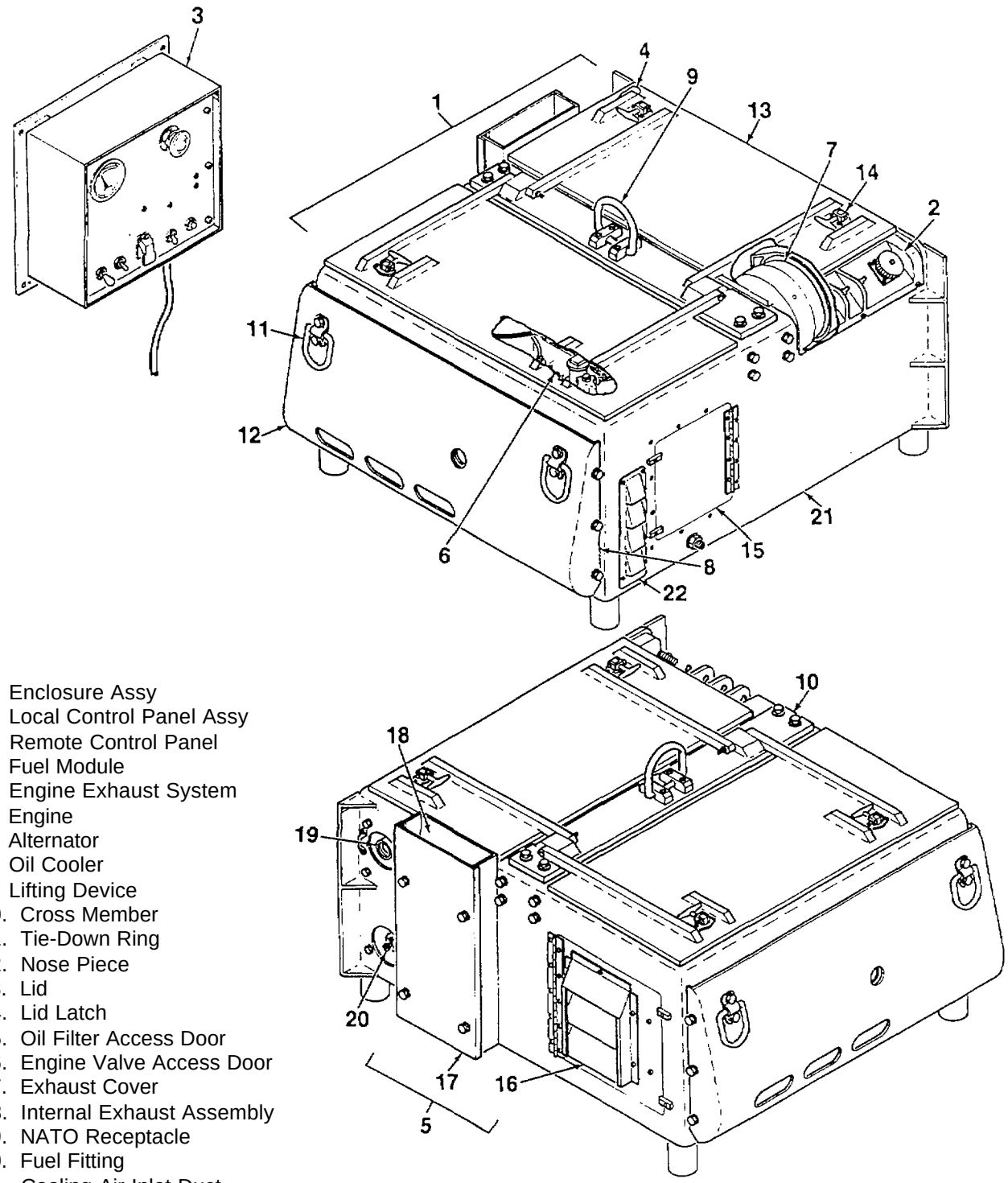

1. Enclosure Assy
2. Local Control Panel Assy
3. Remote Control Panel
4. Fuel Module
5. Engine Exhaust System
6. Engine
7. Alternator
8. Oil Cooler
9. Lifting Device
10. Cross Member
11. Tie-Down Ring
12. Nose Piece
13. Lid
14. Lid Latch
15. Oil Filter Access Door
16. Engine Valve Access Door
17. Exhaust Cover
18. Internal Exhaust Assembly
19. NATO Receptacle
20. Fuel Fitting
21. Cooling Air Inlet Duct
22. Warm Air Outlet Duct

Figure 1-1. 5kW, 28VDC, Diesel Engine Driven Auxiliary Power Unit (APU)

CHAPTER 1
INTRODUCTION

Section I. GENERAL INFORMATION

1-1. SCOPE.

This manual provides instructions on operation, troubleshooting, and maintenance of the 5kW, 28VDC, Diesel Engine Driven Auxiliary Power Supply (APU), MEP-952B, NSN 6115-01-452-6513. Information is provided on principles of operation, controls and indicators, preventive maintenance checks and services, lubrication, operation under both local and remote conditions, troubleshooting, and maintenance. Refer to Figure 1-1 for full view illustrations of the APU showing features pertinent to the operator.

1-2. MAINTENANCE FORMS AND RECORDS.

Department of the Army forms and procedures used for equipment maintenance will be those described by DA Pam 738-750, The Army Maintenance Management System (TAMMS).

1-3. CORROSION PREVENTION AND CONTROL (CPC).

a. Corrosion Prevention and Control (CPC) of Army materiel is a continuing concern. It is important that any corrosion problems with the APU be reported so that the problem can be corrected and improvements can be made to prevent the problem in future APUs.

b. While corrosion is typically associated with rusting of metals, it can also include deterioration of other materials, such as rubber or plastic. Unusual cracking, softening, swelling, or breaking of these materials may be a corrosion problem.

c. If a corrosion problem is identified, it can be reported using Standard Form 368, Product Quality Deficiency Report. Use of keywords such as "corrosion", "rust", "deterioration", or "cracking" will ensure that the information is identified as a CPC problem.

d. Submit Form 368 to the address specified in DA Pam 738-750.

1-4. DESTRUCTION OF ARMY MATERIAL TO PREVENT ENEMY USE.

For destruction of Army material to prevent enemy use, refer to TM 750-244-3.

1-5. REPORTING EQUIPMENT IMPROVEMENT RECOMMENDATIONS (EIR's).

If your APU needs improvement, let us know. Send us an EIR. You are the only one who can tell us what you don't like about your equipment. Put it on a SF 368 (Product Quality Deficiency Report). Mail it to: Commander, US Army Communications and Electronics Command (CECOM), Customer Feedback Office, ATTN: AMSEL-LC-LEO-D-CS-CFO, Fort Monmouth, NJ 07703-5000. We will send you a reply.

1-6. WARRANTY INSTRUCTIONS

The 5 kW 28VDC APU contains two components covered by warranty. The engine has a one year warranty from the date of manufacture of the generator set. The generator set manufacturing date is located on the generator set dataplate. The alternator and regulator have a one year warranty from their date of Niehoff manufacture. The date of manufacture is located on a dataplate attached to the alternator/voltage regulator.

To submit a warranty claim, fill out a Product Quality Deficiency Report, SF368, as per DA PAM 738-750. Be sure to include the dates from the applicable data plates and check 'Yes' in block 19, Item under warranty. Hold the defective part until disposition instructions are provided.

1-7. NOMENCLATURE CROSS-REFERENCE LIST.

Shortened nomenclature is used in this manual to make procedures easier for you to read. A cross-reference between the shortened nomenclature and the official nomenclature is shown in Table 1-1.

Table 1-1. Nomenclature Cross-Reference

Common Name	Official Nomenclature
APU	5kW, 28VDC, Diesel Engine Driven Auxiliary Power Unit, MEP-952B, NSN 6115-01-452-6513

1-8. LIST OF ABBREVIATIONS.

All abbreviations used in this manual are found in MIL-STD-12.

Section II. EQUIPMENT DESCRIPTION

1-8. EQUIPMENT CHARACTERISTICS.

- 5 Kilowatt, 28 Volts Direct Current, Auxiliary Power Unit (APU)
- Shock-mounted in an aluminum enclosure
- Front mounting brackets bolt to APU enclosure
- Rear mounting brackets welded to APU enclosure
- Two service lids on top of enclosure, two engine service doors on sides of enclosure
- Single point lifting provision on top of enclosure
- Fan-baffle, beltless cooling system
- Single cylinder, air fin cooled, horizontal heavy duty diesel engine
- Negative ground, brushless 6-phase externally energized and self-rectifying alternator

1-9. CAPABILITIES AND FEATURES.

- 3000 RPM operating speed
- 5.0 Kilowatt, 28 VDC, 180 Amp rated output at 4000 feet altitude, 95ºF (15 HP maximum)
- Rated engine horsepower of 15 HP continuous at 3000 RPM
- Output is 28 VDC, 3000 RPM
- Equipped with a 28 VDC NATO slave receptacle
- Audio noise rating of less than 70 dBA at 23 feet from enclosure, 85 dBA at operator's control panel
- Engine equipped with hand-start (manual crank) capability
- Engine shutdown of 30 seconds, maximum
- Weight 580 pounds, dimensions 34.5 x 30.5 x 17.0 inches
- Local and remote control of APU operations

1-10. LOCATION AND DESCRIPTION OF MAJOR COMPONENTS (FIGURE 1-1).

a. The 5kW, 28VDC, Diesel Engine Driven Auxiliary Power Unit, MEP-952B, hereafter referred to as APU, is designed to mount on the U.S. Army M1068 tracked vehicle. The APU provides alternate power to the vehicle. The APU is also capable of remote operation, detached from the vehicle.

b. The APU consists of an aluminum enclosure assembly (1, Figure 1-1), local control panel assembly (2), remote control panel assembly (3), fuel module (4), engine exhaust and silencer system (5), single-cylinder diesel engine (6), 6 phase brushless alternator (7), engine oil cooler (8), and associated wiring harnesses, electrical connectors, and fuel hoses. Two detachable mounting brackets are secured to the front sides of the APU enclosure. Two vertical mounting brackets are welded to the rear comers of the enclosure. These brackets are used to secure the APU to the M1068 vehicle.

c. **Enclosure Assembly.** The enclosure assembly (1, Figure 1-1) supports and protects all APU components. The enclosure housing is a one-piece aluminum structure and forms the front, back, sides, and base of the enclosure assembly. A single point lifting device (9) is mounted to the top-center cross member (10). Four tie-down rings (11) are mounted on the enclosure, two on the nose piece (12) and two on the rear housing panel.

d. Two liftable lids (13) are mounted to the top of the of the enclosure assembly. Fold-down latches (14) secure the lids in place during vehicle operation. The lids allow easy access to APU components for inspection, servicing, and maintenance tasks. The lids and top-center cross member (10) may be removed as an assembly, allowing fast and easy removal/replacement of the engine and alternator. Two hinged doors (15, 16) located on the sides of the enclosure permit quick access to the engine. The engine oil filter door (15) opens to allow access to the engine oil filter, engine oil cooler, and related hoses. The engine valve access door (16) allows access to the engine rocker box and cylinder head for adjustment procedures.

e. A slanted nose piece (12) is attached to the front of the enclosure. The nose piece deflects foreign objects that may come up the front of the vehicle, protecting the APU. A hole in the nose piece allows for insertion of the engine crank handle, permitting manual start of the engine if required. The oil cooling fan is mounted to the enclosure housing front panel, behind the nose piece.

f. A metal exhaust cover (17) is mounted to the left side of the enclosure. The cover protects the exhaust silencer (18) and exhaust pipe, and prevent personnel from touching hot exhaust components. The cover is closed on the bottom to ensure that all hot exhaust air escapes upward. A NATO electrical receptacle (19) and fuel fitting (20) are accessed through recesses located to the left of the exhaust cover.

g. A cooling air inlet duct (21) is located under the enclosure housing. Two warm air outlet ducts (22) are located on the sides of the enclosure. Each outlet duct is baffled. The inside of the enclosure and underside of the access lids are covered with sound-proofing material to reduce noise.

h. **Local Control Panel Assembly.** The local control panel assembly (2, Figure 1-1) is mounted at the right rear corner of the enclosure assembly and contains all the control devices required to operate the APU. The local control panel allows the operator to start and run the APU, transfer control to the remote control panel assembly (3), and stop the APU in the local or remote operating mode.

i. The local control panel assembly consists of a START / PRIME RUN / OFF switch, PREHEAT switch, APU ON switch, LOCAL / REMOTE switch, REMOTE panel cable connector receptacle, three APU electrical test points, 5 LED indicator light, a printed circuit board, and associated breakers, relays, and connectors. The control panel enclosure forms a water-resistant shield for internal components. One electrical receptacle on the rear of the panel connects the panel to the APU wiring harness.

j. The control panel may be removed from the enclosure assembly as a unit, allowing for easy maintenance. Refer to Description and Use of Operator's Controls and Indicators (Chapter 2) for detailed information on control panel assembly components.

k. **Remote Control Panel.** The remote control panel (Figure 1-1) allows for operation of the APU from inside of the vehicle. The remote control panel consists of a DC voltmeter, START / PRIME RUN / OFF switch, PREHEAT switch, BATTLE SHORT OFF switch, APU ON switch, EMERGENCY STOP push-button, a printed circuit board, and associated connectors. LED indicator lights are used to indicate the following conditions; APU ON, battle short ON, HIGH ENGINE TEMPERATURE, and LOW OIL PRESSURE. LEDs are tested using a PRESS TO TEST LAMPS switch, located on the remote panel.

l. An eight (8) foot interconnect cable connects the APU local control panel to the remote control panel. Refer to Description and Use of Operator's Controls and Indicators (Chapter 2) for detailed information on remote control panel assembly components.

m. **Fuel System and Fuel Module.** APU fuel system components are housed within a removable fuel module (Figure 1-2). The fuel module consists of an inlet fuel fitting (1), fuel filter water separator (2), electric fuel pump (3), fuel float valve assembly (4), and related hoses and fittings.

n. The module is fitted with a removable cover (5) for ease of maintenance and may be removed as a unit from the APU enclosure. The module cover is equipped with three slide latches that secure the cover during unit operation. A hole in the module cover moderates air temperature, keeping the temperature within the module cooler than the temperature within the rest of the APU enclosure.

o. Fuel for operation of the APU is supplied to the fuel module from the vehicle by way of a fuel interface hose. The APU may also be operated from an external fuel supply utilizing the same inlet fuel fitting (1). A fuel supply line (6) passes fuel from the fuel filter water separator (2), through an in-line fuel filter (7), to the engine fuel pump. A fuel return line (8) directs fuel from the engine fuel injector line to the fuel float valve assembly (4).

p. The fuel module also houses the NATO electrical receptacle (9), contactor, and related wiring and terminals that control power output to the vehicle.

1. Fuel Fitting
2. Fuel Filter Water Separator
3. Electric Fuel Pump
4. Fuel Float Valve Assy
5. Fuel Module Cover
6. Fuel Supply Line
7. In-Line Fuel Filter
8. Fuel Return Line
9. NATO Receptacle

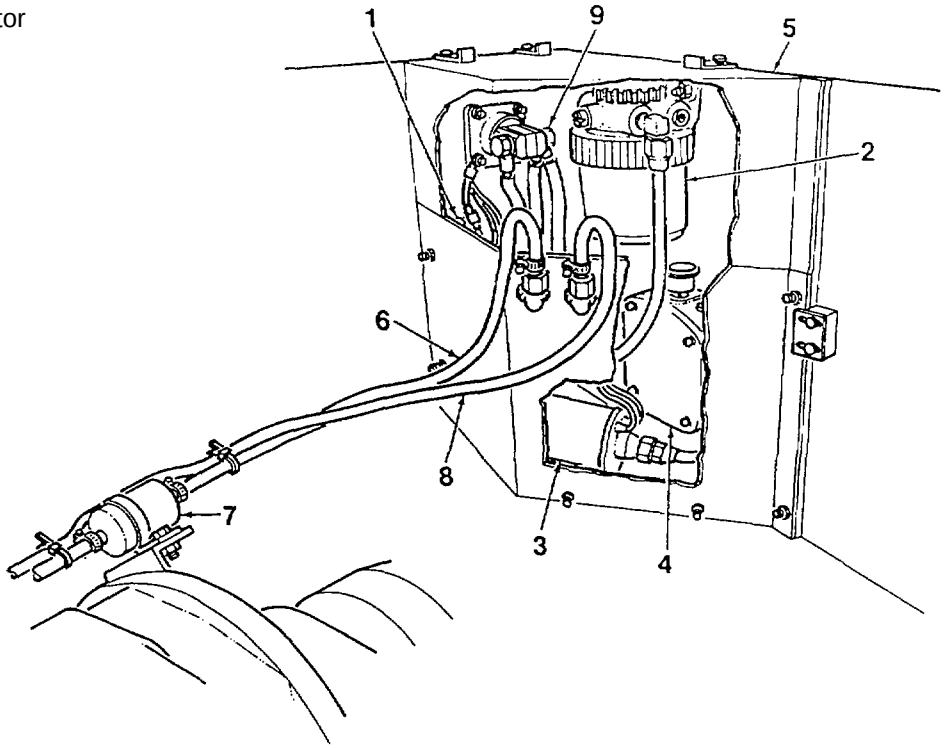

Figure 1-2. Fuel System Components

q. **Engine Cooling and Exhaust System.** The engine cooling and exhaust system (Figure 1-3) draws cool air into the APU for purposes of cooling the engine and alternator, and forces warm air and exhaust fumes from the enclosure to the atmosphere. The cooling system consists of a twin fan (1) mounted to the alternator (2), an air inlet duct (3) located in the base of the enclosure, engine air inlet hose (4), engine air filter (5), and engine air outlet baffle (6).

r. The engine exhaust system consists of an engine muffler/silencer (8), mounted to the engine exhaust port, and exhaust piping (9). An exhaust cover (10) attached to the side of the APU enclosure provides protection for the silencer and exhaust piping. A rain cap on top of the exhaust piping prevents rain from entering. The cover is closed on the bottom to ensure that all hot exhaust air escapes upward, and padded with sound-proofing material.

s. An engine oil cooler (11) is mounted to the inside of the enclosure. An electric fan (12) is mounted directly in front of the oil cooler and forces cool air across the oil cooler tubes. Warm air exits through a small air outlet baffle (13), located on the side of the enclosure.

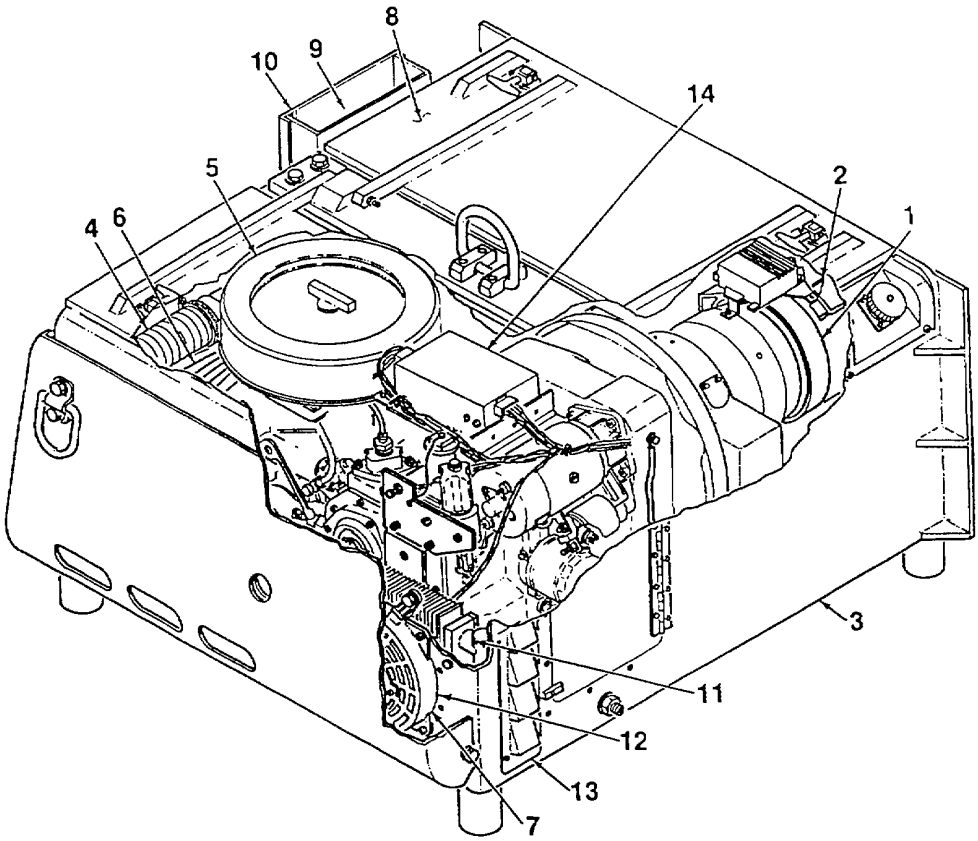

1. Twin Fan
2. Alternator
3. Air Inlet Duct
4. Air Inlet Hose
5. Engine Air Filter
6. Air Outlet Baffle
7. Thermostat
8. Engine Silencer
9. Exhaust Piping
10. Exhaust Cover
11. Engine Oil Cooler
12. Electric Fan
13. Air Outlet Baffle
14. Preheat Module

Figure 1-3. Cooling Air and Exhaust Components

t. **Diesel Engine.** The APU is equipped with a four cycle, single cylinder, air cooled, fuel injected, horizontal cylinder engine (Figure 1-4). It has a 95mm bore, a 100mm stroke, 709 cubic centimeter displacement, and has a rated output of 15 horsepower at 3000 rpm. The engine fuel system consists of a solenoid (1), fuel injector assembly (2), fuel injection pump (3), fuel feed pump (4), and associated fuel piping, hoses, and fittings.

u. The engine oil system consists of an oil level dipstick (5), oil glow plug pipe (6), engine oil filter (7), oil pressure valve (8), oil pressure switch (9), oil drain valve assembly (10), and oil filler (11). The engine is equipped with a 24 volt starter motor (12) and an alternator assembly (13). A dry air filter assembly (14) is mounted to the top of the engine. A speed control assembly (15) regulates engine rpm. A one piece flywheel housing (16) protects the engine flywheel and covers the area of engine/alternator connection.

v. **Alternator.** The APU uses a brushless, six phase, negative ground, externally energized, and selfrectifying alternator (17, Figure 1-4). The alternator is supplied with an external, solid state regulator with flat temperature compensation (18), a twin fan assembly (20), and fan guard (21).

w. The engine and alternator are connected by a flexible rubber coupling and drive assembly. Four mounting feet (22) and a mounting bracket (19) secure the assembled engine-alternator to the enclosure base.

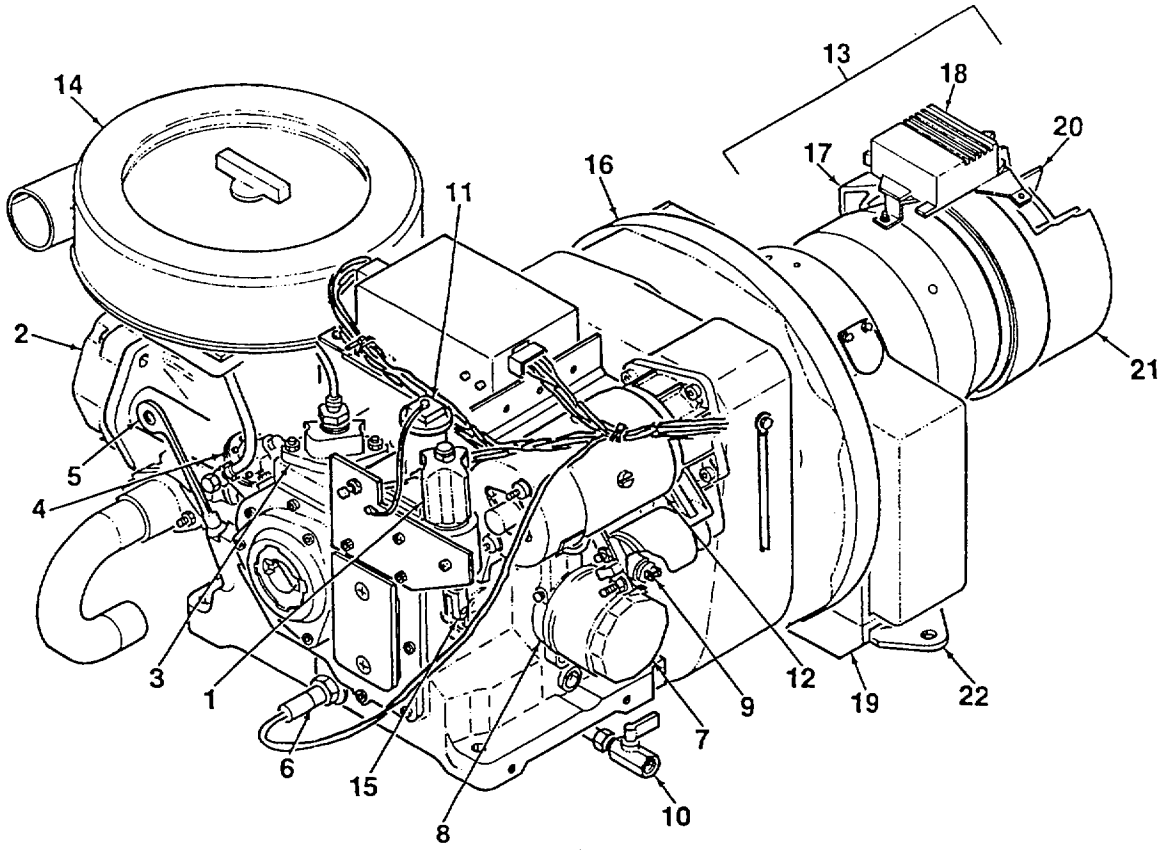

1. Solenoid
2. Fuel injector Assy
3. Fuel Inject. Pump
4. Fuel Feed Pump
5. Oil Level Dipstick
6. Oil Glow Plug
7. Engine Oil Filter
8. Oil Pressure Valve
9. Oil Pressure Switch
10. Oil Drain Valve
11. Oil Filler
12. Starter Motor
13. Alternator Assy
14. Air Filter Assy
15. Speed Control Assy
16. Flywheel Housing
17. Alternator
18. Voltage Regulator
19. Mounting Bracket
20. Twin Fan Assy
21. Fan Guard
22. Mounting Feet

Figure 1-4. Engine and Alternator Components

1-11. EQUIPMENT DATA.

Refer to Table 1-2, Equipment Data, for a summary of specific capabilities, limitations, and critical data for operation and maintenance of the APU

Table 1-2. Equipment Data

WEIGHTS AND DIMENSIONS	
Weight	580 lbs (263 Kg)
Length	38.0 in. (96.5 cm)
Width	30.5 in. (77.7 cm)
Height	17.0 in. (43.2 cm)
GENERAL SPECIFICATIONS	
Output Power Source	28 VDC NATO Slave Receptacle
Rated Voltage, Current	28 VDC, 180 amps
Audio Noise Rating	Less than 70 dBA at 23 feet (7 meters) from perimeter of set, 3.9 feet (1.2 meters) above ground 85 dBA at operator's panel
Fuel Requirements	MIL-F-46162 diesel fuel; VV-F-800, Type DF-1, DF-2, or DF-A; MIL-T-83133 turbine fuel, JP8
Auxiliary Fuel System	Supplied from vehicle
TRANSPORTATION	
Manual Transport	Central lifting point
Truck, Rail, Air and Trailer Transport	Tiedown rings provided
Inclined Transport (Angle)	27 degrees maximum, in any direction
PERFORMANCE CHARACTERISTICS	
APU	
Kilowatt Capacity at Altitude/Temperature	
1000 ft. (718.1 mm hg) at 107 degrees F	5.5 kilowatts
4000 ft. (656.3 mm hg) at 95 degrees F	5.0 kilowatts
Output Terminal	NATO Slave (MS52131)

Table 1-2. Equipment Data (continued)

PERFORMANCE CHARACTERISTICS

Diesel Engine

Horsepower	15 at 3000 rpm
Horsepower Derating at Altitude/Temperature	
1000 ft. at 107 degrees F	13.35
4000 ft. at 95 degrees F	12.45
8000 ft. at 95 degrees F	10.35
Operating RPM	3000 rpm
Pre-Heat Time	10 minutes oil, 2 minutes air
Engine Shutdown	60 seconds maximum
Engine Cooling System	Air, fin cooled
Oil Type	MIL-L-2104, 15W-40 (0 to +120º F) MIL-L-46167, 5W-30 (-25 to +15° F)
Engine Oil Capacity	0.70 gallon (2.6 liters)
Oil Sump Capacity	0.55 gallon (2.1 liters)
Bore	3.75 inches (95 mm)
Stroke	3.94 inches (100 mm)
Cylinder	Single
Displacement	290 cubic inches (738 cubic cm)
Compression Ratio	19:1
Torque	27.4 ft-lbs (37 Nm) at 2000 rpm
Fuel Consumption at 5.0 kW	8.8 ounces (250 grams) per kW hour
Oil Consumption at 5.0 kW	0.04 ounces (1.0 gram) per kW hour

Alternator

Operating RPM	3000 rpm nominal, 8000 maximum
Overspeed	10,000 rpm
Rotor Inertia With Fan	80 lbs/square in. (234 Kg/square cm)
Output	180 amp, 28 VDC at 3000 rpm, 1000 feet altitude
Efficiency	75 to 68% over normal operating range
Operating Temperature (ambient)	-25 to +120° F

1-12. APU DECALS, STENCILS, IDENTIFICATION AND WARNING PLATES.

Figure 1-5 illustrates all decals, stencils, identification plates, operating instruction plates, and warning plates found on the APU.

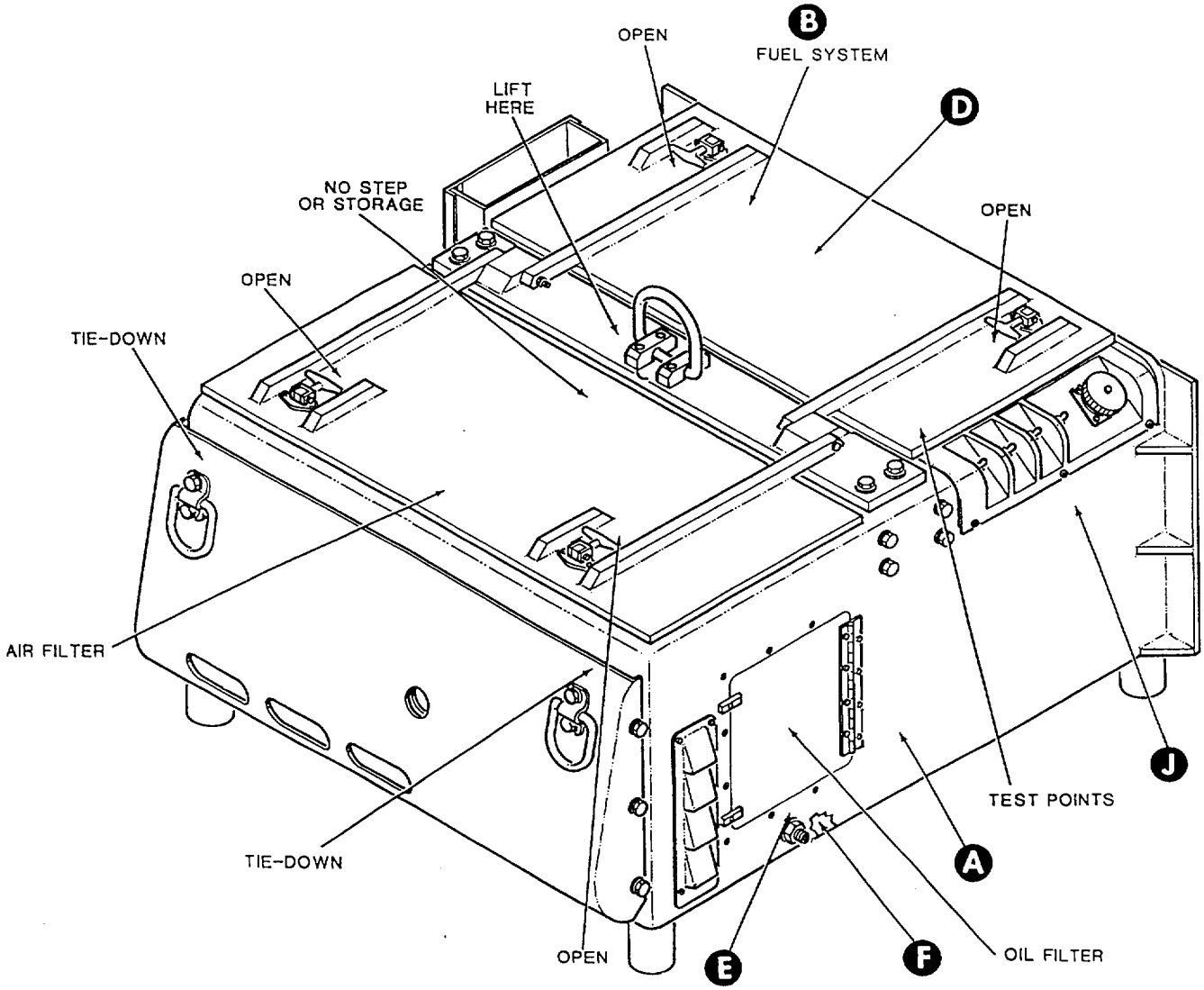

Figure 1-5. APU Decals, Stencils, Instruction and Warning Plates (Sheet 1 of 5)

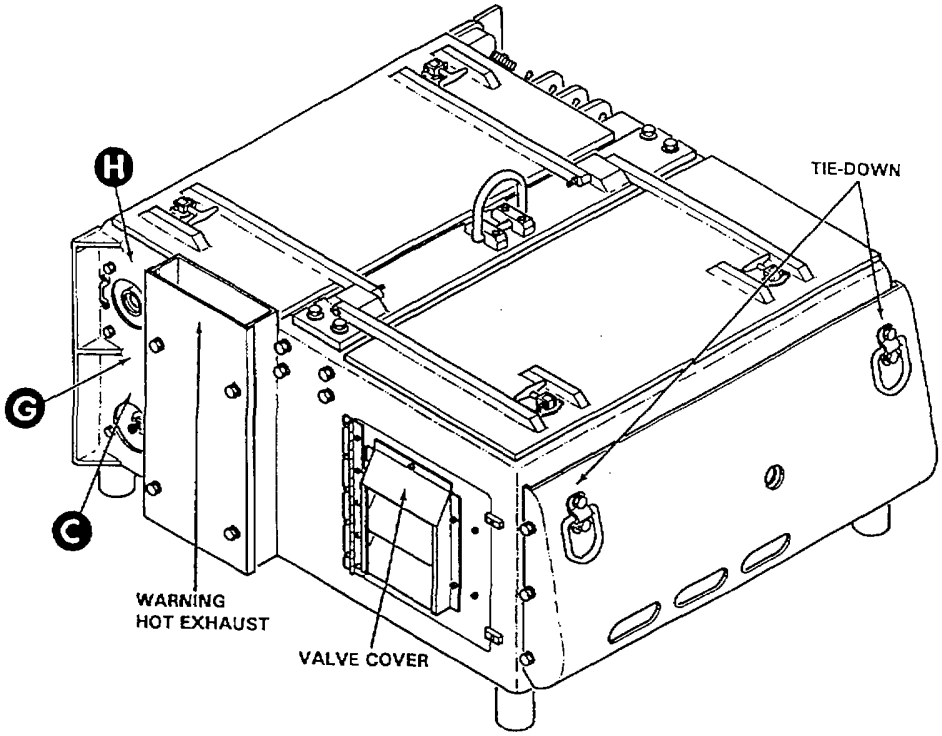

A

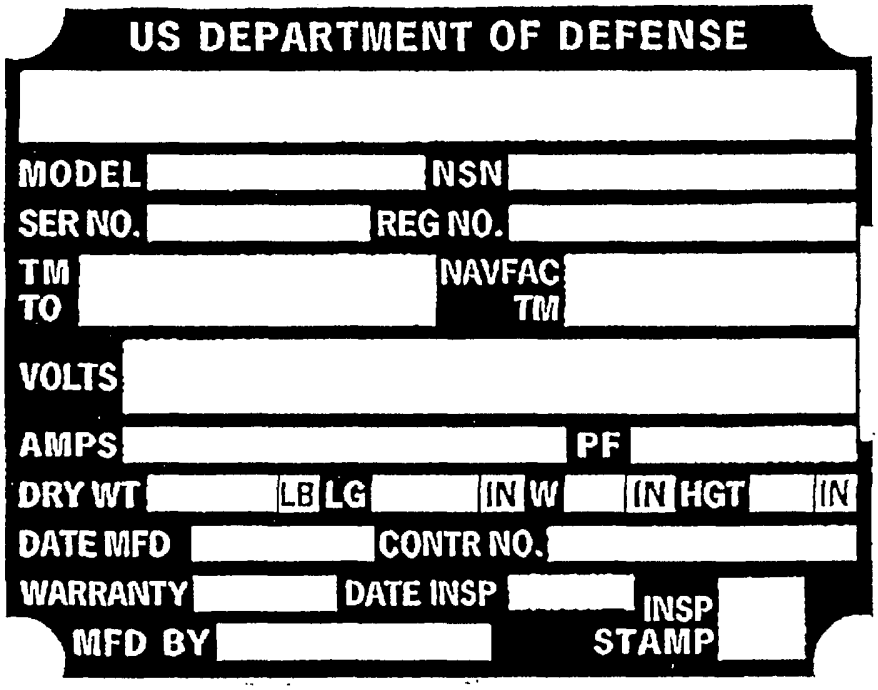

Figure 1-5. APU Decals, Stencils, Instruction and Warning Plates (Sheet 2 of 5)

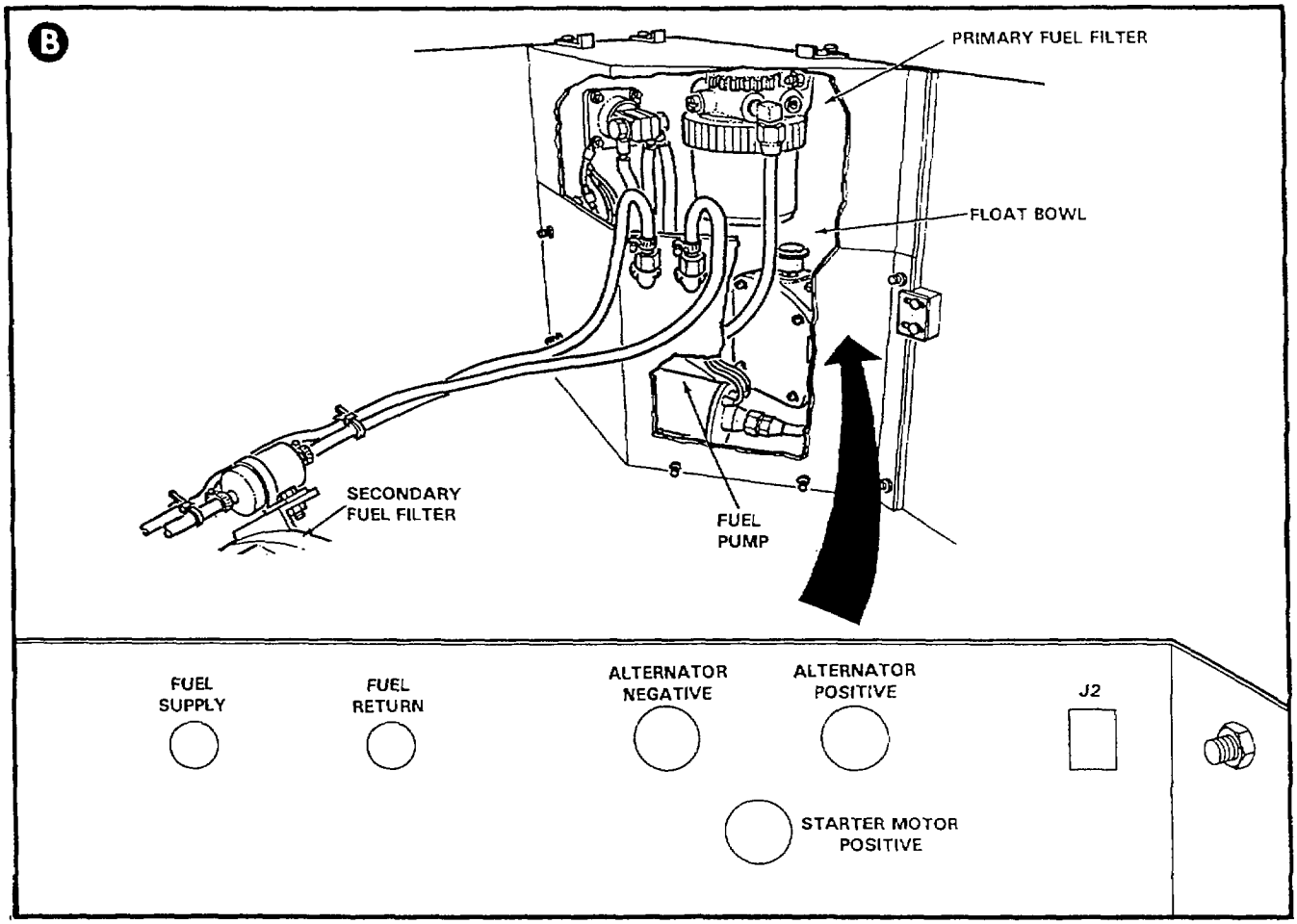

C

FUEL SUPPLY

Figure 1-5. APU Decals, Stencils, Instruction and Warning Plates (Sheet 3 of 5)

D

OPERATING INSTRUCTIONS

WARNING!!!

TO AVOID SHOCK HAZARD, BE SURE THAT THE APU IS PROPERLY GROUNDED BEFORE OPERATING

PROPER GROUNDING IS ACHIEVED THROUGH THE SLAVE/OUTPUT CABLE WHEN THE APU IS ON THE VEHICLE.

1. VERIFY SLAVE /OUTPUT CABLE AND FUEL INTERFACE ARE CONNECTED TO THE VEHICLE.
2. CHECK THE ENGINE OIL LEVEL AND ADD IF NECESSARY. ENGINE CAPACITY IS 2.5 QUARTS OF MIL-L-2104 OIL UNDER NORMAL CONDITIONS. UNDER CONDITIONS AT OR BELOW -15ºF (-26ºC), USE MIL-L-46167 ARCTIC OIL.
3. VERIFY THE "LOCAL/REMOTE" SWITCH IS IN THE "LOCAL" POSITION FOR OPERATION AT THE APU, IF REMOTE OPERATION IS DESIRED, MOVE THE SWITCH INTO THE "REMOTE" POSITION.
4. MOVE THE APU CONTROL SWITCH INTO THE "PRIME/RUN"' POSITION.
5. UNDER NORMAL CONDITIONS, MOVE THE "START/RUN PRIME SWITCH INTO THE "START' POSITION AND HOLD UNTIL THE ENGINE STARTS. THEN RELEASE THE SWITCH.
6. UNDER CONDITIONS AT OR BELOW 32ºF (0ºC), OPERATE THE PREHEAT SWITCH AS NEEDED TO FACILITATE STARTING, PRIOR TO STEP 5.
7. TO STOP THE APU, MOVE THE START/RUN/PRIME SWITCH IN-TO THE OFF POSITION.
8. IN AN EMERGENCY, DEPRESS THE "EMERGENCY STOP" BUTTON LOCATED ON THE REMOTE PANEL.

Figure 1-5. APU Decals, Stencils, Instruction and Warning Plates (Sheet 4 of 5)

E

OIL DRAIN

F

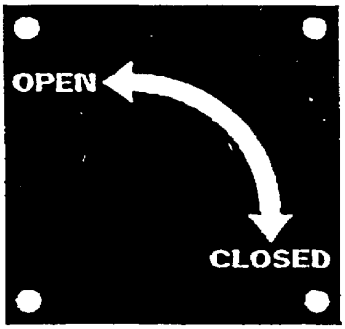

G

FUEL TYPES

USE ONLY THE FOLLOWING FUELS IN THIS APU:

1. MIL-F-46162 DIESEL FUEL
2. VV-F-800 DIESEL FUEL: TYPE DF-1, DF-2, OR DF-A
3. MIL-T-83133 TURBINE FUEL: TYPE JP-8

H

SLAVE/OUTPUT RECEPTACLE 24 VDC

J

APU RATING

KILOWATT CAPACITY: 5kW CONTINIOUS AT 1,219 METERS (4000 FEET AND 95°F (35°C)

RATED VOLTAGE AND CURRENT 28 VOLTS DC, 180 AMPERES

Figure 1-5. APU Decals, Stencils, Instruction and Warning Plates (Sheet 5 of 5)

Section III. PRINCIPLES OF OPERATION

1-13. PRINCIPLES OF OPERATION.

The theory behind the operation of the APU is described in the following paragraphs. Each APU system is dependant upon the other for efficient operation. The information contained here will assist operators, as well as unit and direct support maintenance personnel in understanding how the APU functions. This knowledge will assist in isolating components which have failed. Refer to the Electrical Schematic (Figure FO-1) found at the end of this manual.

1-14. ELECTRICAL SYSTEM.

a. The APU operates on a 28 volt direct current (DC) electrical system. The DC system provides power to APU control circuitry, relay logic, and engine cranking, as well as producing voltage for load application. There are 3 test points and 5 LED troubleshooting lights located on the local control panel. There are 4 LED lights located on the remote control panel. There are 2 LED lights located on the preheat module box. These test points and LEDs provide malfunction isolation for critical components of the APU.

b. The DC system is powered by a 24 VDC battery located in the vehicle. The battery is charged by the APU output when the APU is running and the APU ON switch (A1-S4) is placed in the ON position. The APU is grounded through connection to the vehicle by being bolted to the chassis as well as through the NATO connector.

c. Engine cranking is initiated by placing the START / PRIME RUN / OFF switch (A1-S4) in the PRIME RUN position. In this position, switch A1-S4 applies voltage to the following components and circuits:

- Fuel pump, which primes the fuel system
- Preheat module

d. Switch A1-S4 is placed in the PRIME RUN position for a few seconds to allow the APU fuel system to prime. Once the fuel system has primed, the operator moves switch A1-S4 to the START position. Voltage is applied to the preheat module via relay A1-K3. This supplies power to the starter solenoid, oil snap switch (located on the oil filter adapter), and relay A2-A1-K2, which applies voltage to the pull coil for one second. Relay A1-K3 also overrides relay A1-K2, which controls the engine malfunction safety shutdowns (low oil pressure and high engine temperature).

e. The action on relay A1-K2 allows the engine start solenoid to stay latched during the start cycle. When the START / PRIME RUN / OFF switch is released to the PRIME RUN position, A1-K2 remains energized (providing no malfunctions exist).

f. When the engine reaches rated speed, the operator must momentarily move the APU ON switch (A1S3) to the ON position, then release the switch. This energizes latching relay A1-K1. This sends a signal to turn on the alternator and close the contactor. At this time the starter lockout circuit is also energized.

1-15. ENGINE PREHEATING.

If ambient temperature drops below 32º F, the engine PREHEAT switch (A1-S2) should be activated before the engine is cranked. Placing the PREHEAT switch in the OIL (up) position energizes relay A2-K3, providing power to the oil glow plug located in the oil reservoir of the engine. Placing the PREHEAT switch in the AIR (down) position energizes relay A2-K4, providing power to two air glow plugs located in the engine intake manifold. The PREHEAT switch is spring loaded and will return to the off position when released.

1-16. EMERGENCY STOP SWITCH.

When the remote control panel EMERGENCY STOP switch (A4-S3) is pushed in, it removes 28 VDC power from the fuel solenoid and causes the engine to stop. While the EMERGENCY STOP switch is activated, power is removed from the starter solenoid and the engine cannot be cranked. The switch must be pulled out to the off position before the engine can be started again and circuitry functions return to normal.

1-17. MALFUNCTION INDICATORS.

a. If the engine exceeds normal operating temperature, a heat sensitive, high cylinder head temperature switch (HT) closes. The circuitry removes ground from relay A1-K2, causing power to be removed from the fuel solenoid hold coil. A red HIGH ENGINE TEMPERATURE LED (A4-LED 4, located on the remote control panel) illuminates.

b. If engine oil pressure drops below a safe operating level, a low oil pressure switch (OP) opens. The circuitry removes ground from relay A1-K2, causing power to be removed from the fuel solenoid hold coil. A red LOW OIL PRESSURE LED (A4-LED 3, located on the remote control panel) illuminates.

1-18. REMOTE OPERATION.

a. The APU may be operated using a remote control panel supplied with the system. The operator places both START / PRIME RUN / OFF switches (local and remote control panels) in the OFF position. The REMOTE / LOCAL switch (A1-S1, located on the local control panel) is moved to the REMOTE position. The control of the APU is switched to the remote control panel. Electrical operation of the APU is the same whether controlled from the local or remote control panels. The remote control panel is equipped with a PRESS TO TEST LAMPS switch (A4-S6). When the switch is depressed, all LEDs shall illuminate, verifying that they are functioning properly.

b. The BATTLE SHORT switch (A4-S5, located on the remote control panel) overrides the shutdown systems of the APU (high engine temperature, low oil pressure). Placing the switch in the ON position sends a 28 VDC signal to the local control panel and energizes relay A1-K2, preventing engine shutdown in low oil or high temperature conditions.

1-19. FUEL SYSTEM.

a. The APU fuel system (Figure 1-6) is designed to interface with the vehicle and operate on the same fuels as the vehicle. The system is self venting and requires no fuel return line to the vehicle. The APU may be operated from an auxiliary fuel source up to twenty-five feet away using the auxiliary fuel line provided.

b. An electric fuel pump (1, Figure 1-6) draws fuel from the vehicle to the APU through an interface fuel line (2). The fuel passes through a fuel filter water separator (3), which removes contaminating micro particles and separates water from the fuel flow. Water collects in the base of the fuel filter water separator and may be drained by turning a drain knob. The filtered fuel enters the electric fuel pump (1) and flows to a fuel float valve assembly (4). The float valve bowl holds six ounces of fuel to provide three minutes of APU run time. This three minute period allows the operator to switch from the vehicle fuel supply to an auxiliary fuel supply while the APU is operating. The float valve bowl also functions as the fuel return location and de-aeration site. Fuel level is maintained in the bowl by means of the float valve.

c. Fuel flows from the fuel float valve assembly (4), out of the fuel module, and into a secondary in-line fuel filter (5). The in-line fuel filter is mounted on a bracket at the engine flywheel housing. Filtered fuel passes from the in-line filter to the engine's mechanical fuel pump (6).

d. When the control panel START/PRIME RUN/OFF switch is placed in the START position, a start/stop solenoid is energized, allowing fuel to flow to the engine fuel injection pump (8). The fuel injection pump provides pressurized fuel to operate the engine fuel injector (7). The fuel circuit is completed when excess fuel is returned to the fuel float valve assembly (4).

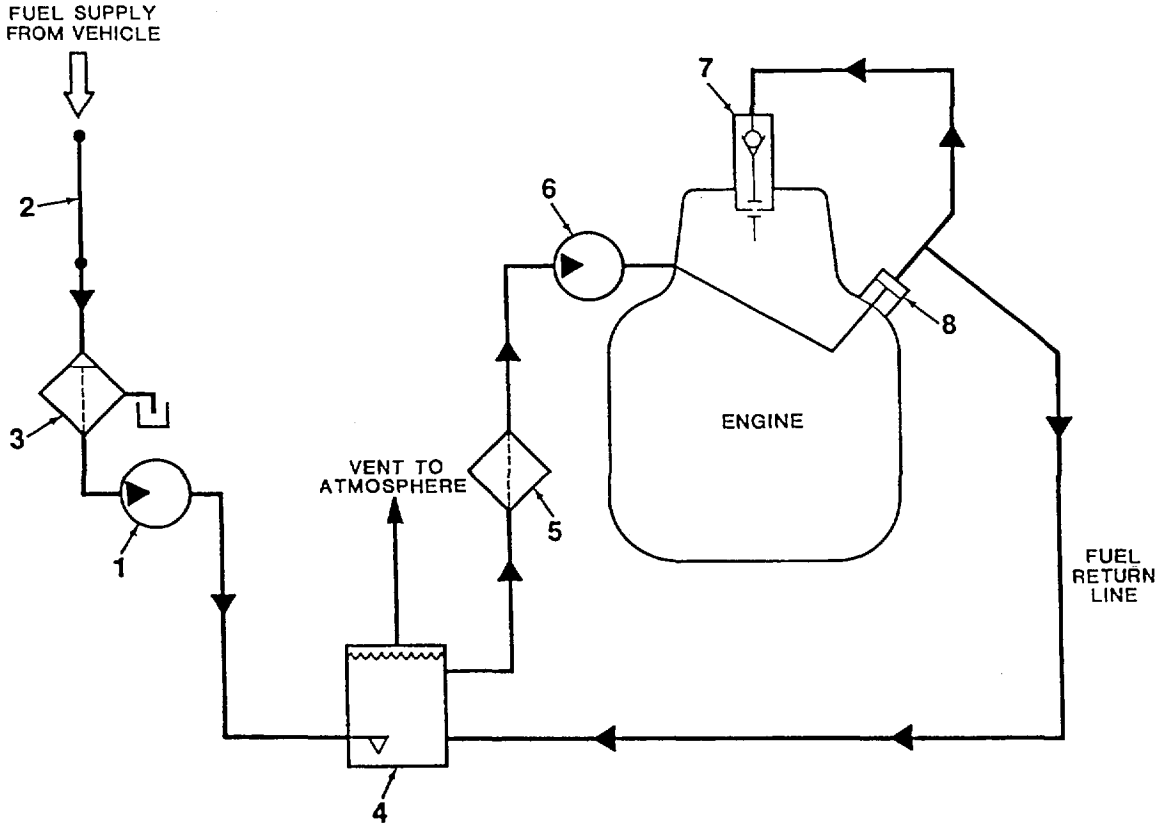

1. Electric Fuel Pump
2. Interface Fuel Line
3. Fuel Filter Water Separator
4. Fuel Float Valve Assy
5. In-Line Fuel Filter
6. Mechanical Fuel Pump
7. Fuel Injector
8. Fuel Injection Pump

Figure 1-6. Fuel System Diagram

1-20. APU COOLING AND EXHAUST SYSTEM.

a. **Air Cooling System**. Cool air is drawn into the APU box by twin fans. Air enters the box through a duct (2, Figure 1-7) located in the base of the box. The air feeds the alternator (1) and engine flywheel, and air flows across the windings and exits the box. The engine air flows thru the cylinder fins (3) and exits the box through the engine head access door (5). Additional cool air enters the box from ports (6) located behind the nose piece. This air is for box cooling and combustion air.

b. **Engine Exhaust.** Hot exhaust air and fumes are passed from the engine exhaust port to an engine silencer (9), through a curved exhaust pipe (10), and out to the atmosphere.

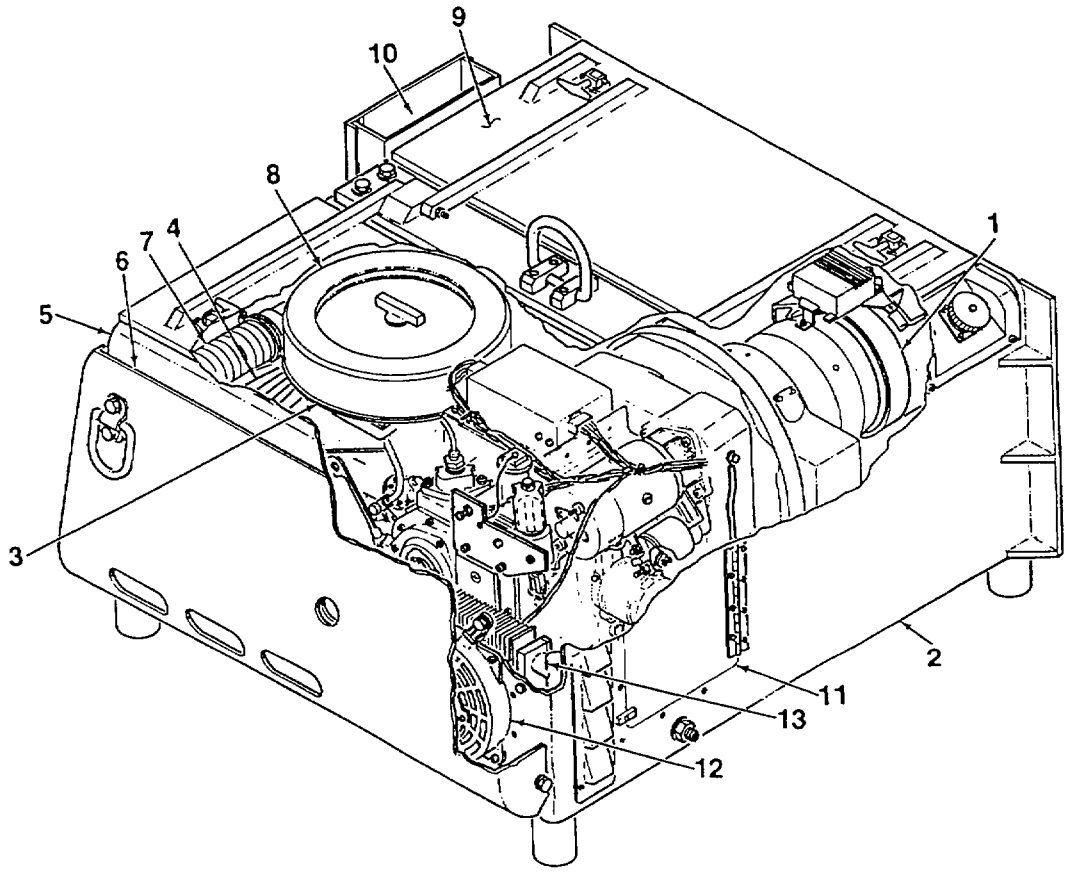

1. Alternator
2. Air Inlet Duct
3. Engine Cylinder Fins
4. Air Duct Baffling
5. Engine Head Access Door
6. Air Inlet Port
7. Air Inlet Hose
8. Engine Air Filter
9. Engine Silencer
10. Exhaust Pipe
11. Oil Filter Access Door
12. Ventilation Fan
13. Engine Oil Cooler

Figure 1-7. Cooling and Exhaust System

c. Engine Oil Cooling. A thermostatically controlled 24 VDC ventilation fan (12) is mounted to the enclosure behind the nose piece. The fan blows cool air through the engine oil cooler (13), which is mounted directly in front of the fan. Engine oil circulates from the oil filter housing and through the oil cooler by means of the engine's mechanical oil pump. The thermostat for the fan is mounted on the oil cooler and activates the fan when oil temperature in the oil cooler reaches 140º F. The air generated by the fan flows through the oil cooler and exits the enclosure through an outlet baffle, located next to the engine oil filter access door (11).

1-21. ENGINE STARTING SYSTEM.

a. Engine start-up is controlled by the engine starter motor (Figure 1-8). When the coil-type starter solenoid (2) is energized, magnetic force pulls the solenoid plunger in. The plunger is connected to a spring loaded engagement fork (1). This engagement fork pushes the drive pinion (5) out to engage the engine flywheel.

b. As the drive pinion (5) is pushed out, the armature (4) contacts the starter motor brushes (3), energizing the starter's field winding. The starter motor will operate until the solenoid (2) is de-energized. Once deenergized, the engagement fork (1) will retract and the drive pinion will disengage from the engine flywheel.

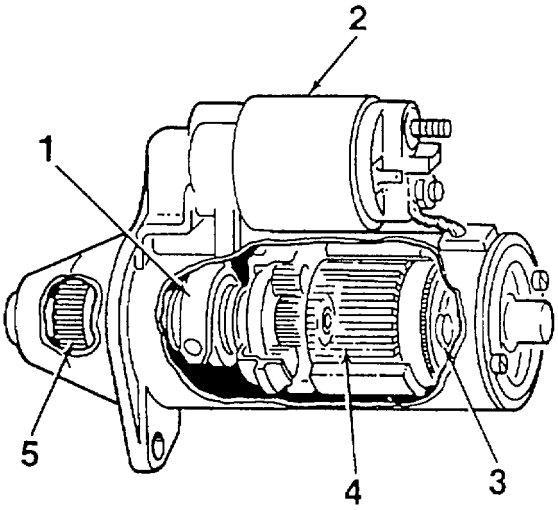

1. Engagement Fork
2. Starter Solenoid
3. Motor Brushes
4. Armature
5. Drive Pinion

Figure 1-8. Engine Starter Motor

1-22. ENGINE COMBUSTION CYCLE.

a. The diesel engine combustion cycle can be divided into four separate strokes; compression stroke, power stroke, exhaust stroke, and intake stroke. Thus the term four-stroke engine is applied to this type of unit.

b. Compression Stroke. During the compression stroke, the engine starter motor cranks the engine flywheel (1, Figure 1-9). The crankshaft (2) turns, forcing the piston (3) to rise to its highest point in the cylinder (4). The upward movement of the piston compresses air trapped inside the combustion chamber, causing temperature to rise over 932 degrees F. A fine mist of fuel is sprayed into the combustion chamber by the fuel injector (5) just before the piston reaches its high point. The compressed air and fuel mixture combusts.

c. **Power Stroke**. The combustion of the fuel and air mixture forces the piston (3) downward, turning the crankshaft (2). The crankshaft is coupled to the alternator shaft and drives the alternator.

d. **Exhaust Stroke**. As the crankshaft (2) turns, it forces the piston (3) to again rise to its highest point. Once the piston begins to rise, the exhaust valve (6) opens. Exhaust gases are forced out of the cylinder (4) as the piston rises. The exhaust valve closes just before the piston reaches its highest point.

e. **Intake Stroke**. As the piston (3) move downward, the inlet valve (7) opens. Air is drawn through the open inlet valve and into the cylinder (4). The inlet valve closes before the piston reaches the end of its stroke. The piston moves upward once more to repeat the combustion cycle.

f. **Inlet and Exhaust Valve Operation.** Inlet and exhaust valve (6, 7) movement is controlled by lobes on the camshaft (8). As a camshaft lobe rotates, it forces a tappet (9) to rise, pushing upward on the mating push rod (10). The push rod forces the rocker arm (11) to rock, pressing down on the inlet/exhaust valve, forcing that valve to open. Air enters the chamber (inlet valve) or exhaust gases exit (exhaust valve) as appropriate.

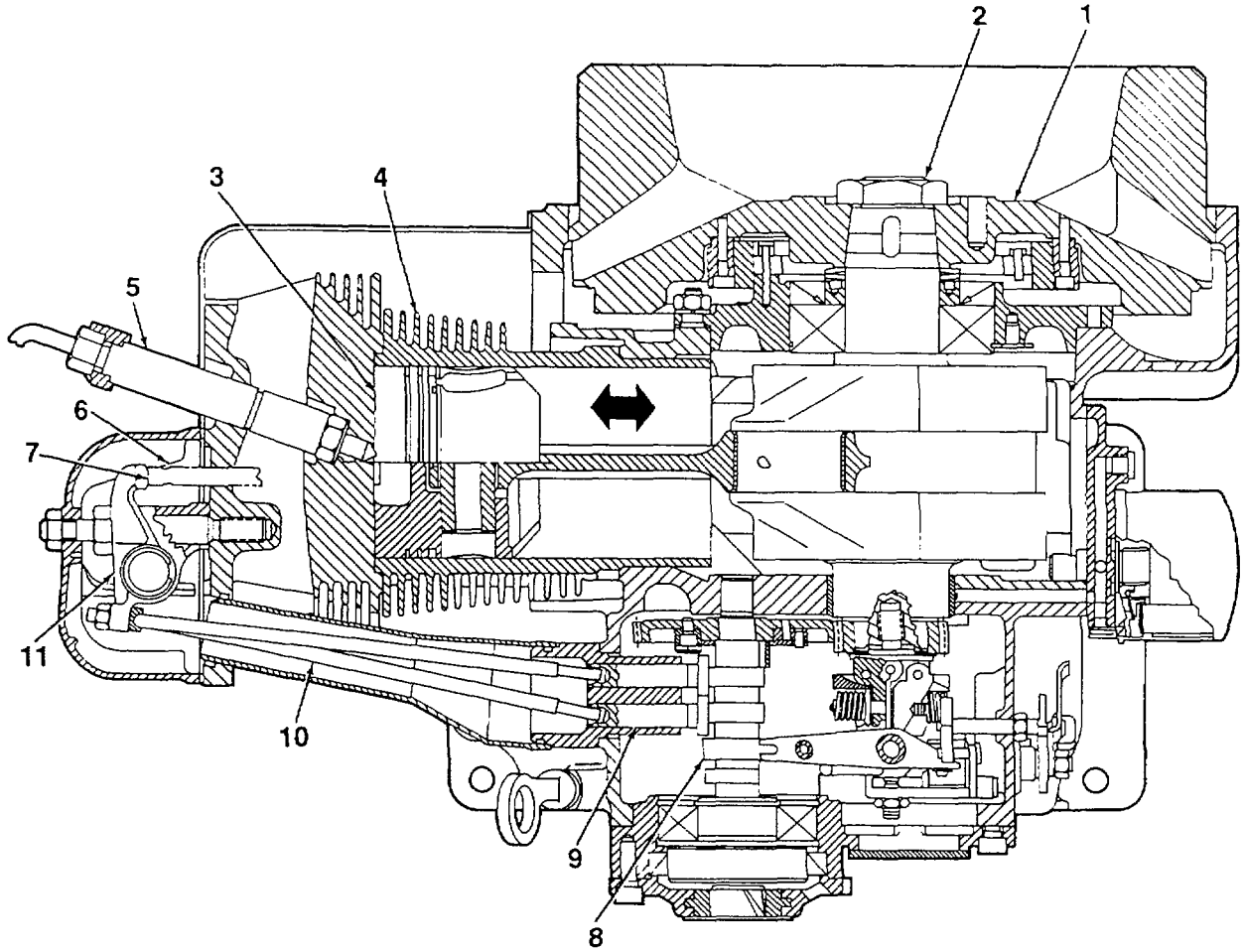

1. Flywheel
2. Crankshaft
3. Piston
4. Cylinder
5. Fuel Injector
6. Exhaust Valve
7. Inlet Valve
8. Camshaft
9. Tappet
10. Push Rod
11. Rocker Arm

Figure 1-9. Engine Combustion Cycle (Top View Cross Section)

1-23. ENGINE LUBRICATION.

a. Engine lubrication is controlled by a crankshaft driven oil pump. The oil pump is housed in the engine crankcase (1, Figure 1-10) and supplies all oil to lubricate and cool high friction internal components. The crankcase acts as the oil sump, since a separate oil pan does not exist. The oil pump draws oil from the oil sump and passes it through an oil filter element (2). After the oil passes through the element it is pumped through the engine oil cooler (13, Figure 1-7) and then to oil jackets to lubricate the crankshaft and camshaft bearings.

b. An oil pressure valve (3, Figure 1-10) relieves high pressure into the oil sump to prevent excessive build up of oil pressure in the lubrication system. An oil pressure switch (4) (normally open) protects the engine from sudden loss of oil pressure. Should pressure drop below the minimum required for safe operation, the oil pressure switch will close, cutting electrical power to the engine run/stop solenoid. Once oil pressure returns to normal, the oil pressure switch will open. Engine oil level is monitored using an engine oil level dipstick (5). The engine is serviced at the engine oil filler port (6). An engine drain valve and hose assembly (7) allows the engine oil to be drained to a pan outside the APU enclosure.

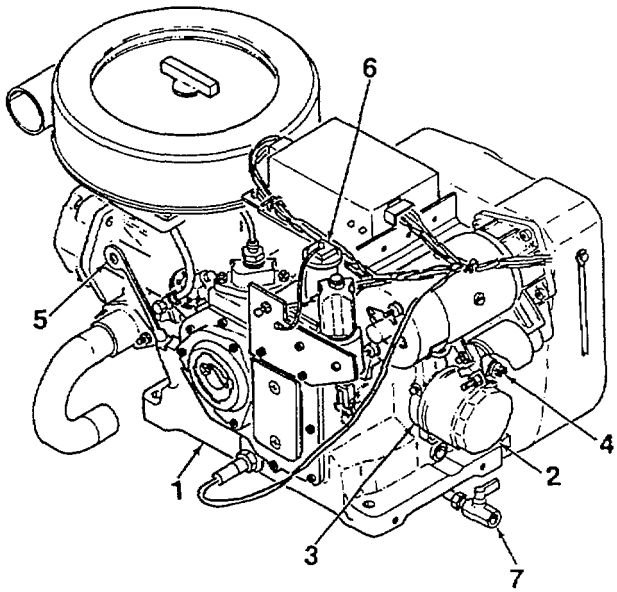

1. Crankcase
2. Oil Filter Element
3. Oil Pressure Valve
4. Oil Pressure Switch
5. Oil Level Dipstick
6. Oil Filler
7. Oil Drain Valve and Hose

Figure 1-10. Engine Oil System

CHAPTER 2
OPERATING INSTRUCTIONS

Section I. DESCRIPTION AND USE OF OPERATORS CONTROLS AND INDICATORS

2-1. OPERATORS CONTROLS AND INDICATORS.

Prior to placing the APU into operation, personnel must be familiar with the location and function of all switches, controls, and indicators. Controls and indicators required for APU operation are identified in the following illustrations.

1 START / PRIME RUN / OFF Switch (A1-S4) Three position switch that controls APU operation.

START position activates engine starter. Spring loaded. Must be held in place.

PRIME RUN position cuts electrical power to starter. Energizes all circuits required for normal operation. When unit is not running, fuel pump is energized to prime fuel system.

OFF position cuts electrical power to the engine shutdown solenoid, causing APU shutdown.

2 PREHEAT OIL / AIR Switch (A1-S2) Activates engine air or oil glow plugs for cold weather starts. Spring loaded.

3 APU ON Switch (A1 -S3) Energizes latching relay A1-K1, turning on the alternator and closing the contactor.

4 REMOTE / LOCAL Switch (A1-S1) Switches operation of APU from local control panel to remote control panel.

5 REMOTE Panel Electrical Connector (A1-J2) Connection point for remote control panel electrical cable.

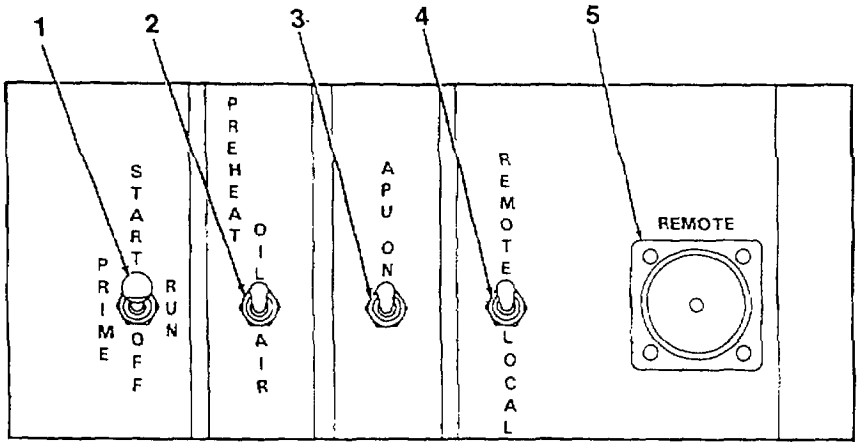

Figure 2-1. Controls and Indicators (Sheet 1 of 4)

6 VOLTMETER (A4-M1) Indicates APU/battery voltage.

7 EMERGENCY STOP Push Button (A4-S3) Disconnects power from the fuel solenoid, causing engine to shut down. For emergency use only.

8 HIGH ENGINE TEMPERATURE Indicator Illuminates when engine temperature exceeds 410 ± 10° F (210 ± 10° C).

9 LOW OIL PRESSURE Indicator Illuminates when engine oil pressure drops below 4 to 6 psi.

10 Battle Short ON Indicator Illuminates when BATTLE SHORT switch is placed in ON position (refer to item no. 15).

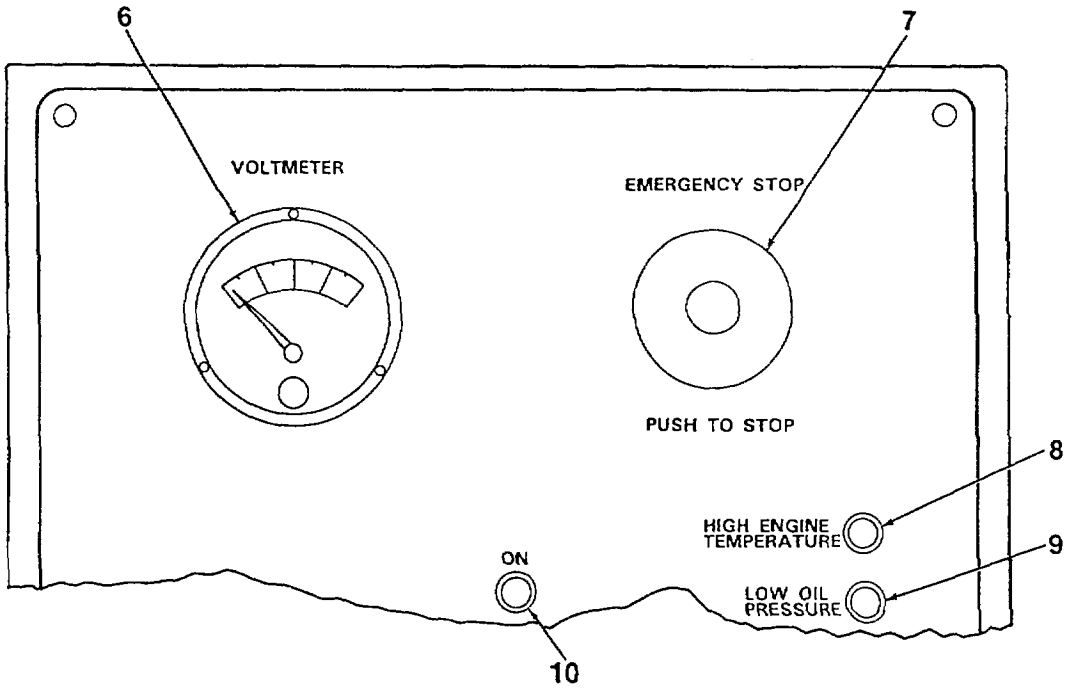

Figure 2-1. Controls and Indicators (Sheet 2 of 4)

11 START / PRIME RUN / OFF Switch (A4-S1) Three position switch that controls APU operation.

START position activates engine starter. Spring loaded. Must be held in place.

PRIME - RUN position cuts electrical power to starter. Energizes all circuits required for normal operation. When unit is not running, fuel pump is energized to prime fuel system.

OFF position cuts electrical power to the engine shutdown solenoid, causing APU shutdown.

12 APU ON Indicator Illuminates when APU contactor is closed.

13 PRESS TO TEST LAMPS Push Button (A4-S6) Tests remote control panel indicator lights for proper operation.

14 APU ON Switch (A4-S4) Energizes latching relay A1-K3, turning on the alternator and closing the contactor.

15 BATTLE SHORT Switch (S5) Placing switch in ON position bypasses protective device shutdown circuit. OFF position enables shut-down circuit to operate.

16 PREHEAT OIL / AIR Switch (A4-S2) Activates engine air or oil glow plugs for cold weather starts. Spring loaded.

17 AIR P.H. Indicator Located on preheat module. Illuminates when air heater elements are energized.

18 OIL P.H. Indicator Located on preheat module. Illuminates when oil heater elements are energized.

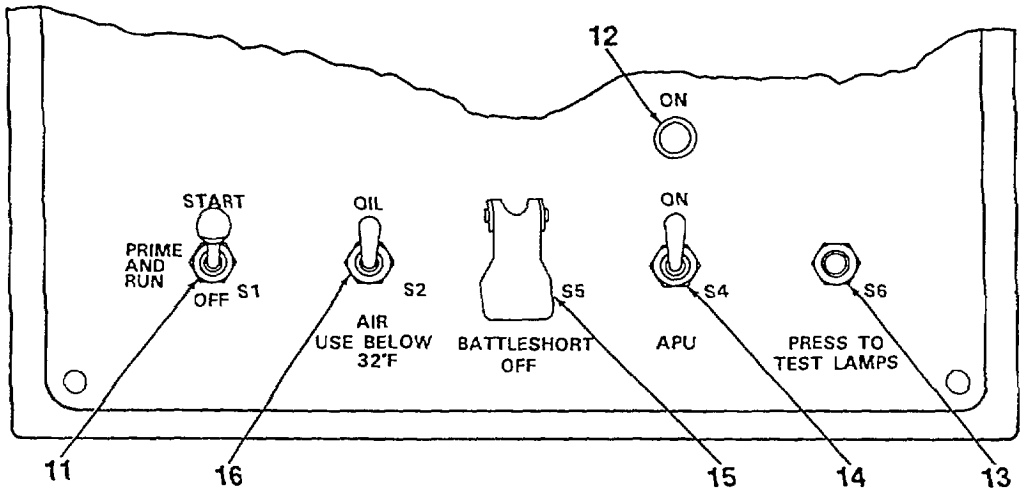

Figure 2-1. Controls and Indicators (Sheet 3 of 4)

19 Hourmeter Located on enclosure wall. Indicates hours of operation up to 9999.9 hours. To view hour meter, look into engine crank access hole (26) and to the right.

20 Manual Start Switch Allows for manual start of engine.

21 Engine Oil Level Dipstick Indicates amount of oil in engine oil sump (crankcase).

22 Engine Oil Filler Allows for addition of engine oil.

23 Engine Oil Drain Valve and Plug Allows for draining of engine oil.

24 Oil Pressure Switch Normally open. Shuts down engine when engine oil pressure drops below 4 to 6 psi.

25 Oil Pressure Valve Relieves high pressure in engine oil sump to prevent excessive build up of oil pressure in lube system. Located behind oil filter.

26 Engine Crank Access Hole Allows for insertion of engine hand crank lever for manual start of engine.

27 RUN Indicator Illuminates when engine run signal is sent to engine (START / PRIME RUN / OFF switch is in RUN position).

28 START Indicator Illuminates when engine is cranking (START PRIME RUN / OFF switch is in START position).

29 LOP (Low Oil Pressure) Indicator Illuminates when engine oil pressure drops below 4 to 6 psi.

30 HT (High Temperature) Indicator Illuminates when engine temperature exceeds 410 ± 10 F (210 ±10 C).

31 APU ON Indicator Illuminates when APU contactor is closed.

32 NATO Receptacle Connection point for vehicle electrical power cable.

33 Fuel Fitting Connection point for vehicle fuel supply line or auxiliary fuel supply.

34 Test Points (TP1-TP3) Used to test APU.

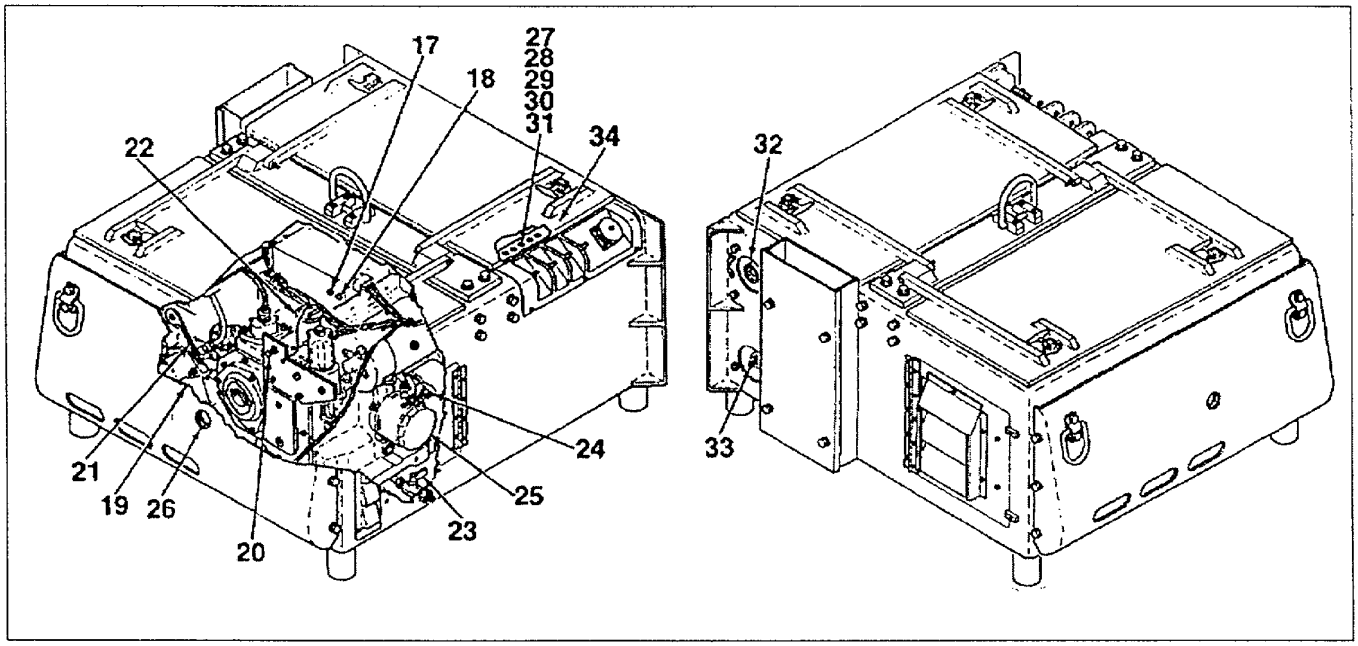

Figure 2-1. Controls and Indicators
(Sheet 4 of 4)

Section II. OPERATOR PREVENTIVE MAINTENANCE CHECKS AND SERVICES (PMCS)

2-2. GENERAL.

Operator Preventive Maintenance Checks and Services (PMCS) means systematic caring, inspecting, and servicing of equipment to keep it in good condition and to prevent breakdowns. As the APU operator, your mission is to ensure that the APU is ready for operation at all times. It must be inspected so that defects may be discovered and corrected before they result in damage or failure.

a. Be sure to perform your PMCS each time you operate the APU. Always do your PMCS in the same order, so it gets to be a habit. Once you have had some practice, you will quickly spot anything wrong.

b. Do your BEFORE (B) PMCS before you operate the APU. Pay attention to WARNINGS, CAUTIONS, and NOTES.

c. Do your DURING PMCS while you operate the APU. Monitor the APU and its related components while it is actually being operated. Pay attention to WARNINGS, CAUTIONS, and NOTES.

d. Do your AFTER PMCS right after operating the APU. Pay attention to WARNINGS, CAUTIONS, and NOTES.

e. Do your WEEKLY PMCS once a week.

f. Use DA Form 2404 or 5988E (Equipment Inspection and Maintenance Worksheet) to record any faults you discover before, during, or after operation, unless you can fix them. DO NOT record faults that you fix.

g. Be prepared to assist unit maintenance when they lubricate the APU. Perform any other services when required by unit maintenance.

2-3. PMCS PROCEDURES.

a. Your Preventive Maintenance Checks and Services, Table 2-1, lists inspections and care required to keep your APU in good operating condition. It is set up so you can make your BEFORE (B) OPERATION checks as you walk around the APU.

b. The "INTERVAL" column of Table 2-1 tells you when to do a certain check or service.

c. The "PROCEDURE" column of Table 2-1 tells you how to do required checks and services. Carefully follow these instructions. If you do not have tools, or if the procedure tells you to, notify your supervisor.

NOTE

Terms "ready/available" and "mission capable" refer to same status: Equipment is on hand and ready to perform its combat missions. (See DA Pam 738-750).

d. The "NOT FULLY MISSION CAPABLE IF" column in Table 2-1 tells you when your APU is nonmission capable and why the APU cannot be used.

e. If the APU does not perform as required, refer to Chapter 3, Section II, Troubleshooting.

f. If anything looks wrong and you cannot fix it, write it on your DA Form 2404 or 5988E. IMMEDIATELY report it to your supervisor. If your equipment does not perform as required refer to Chapter 3, under Troubleshooting, for possible problems.

g. When you perform PMCS you will always need a rag or two. Following are checks that are common to the entire APU:

(1) Keep It Clean. Dirt, grease, oil, and debris only get in the way and may cover up a serious problem. Clean as you work and as needed. Use dry cleaning solvent on all metal surfaces. Use soap and water when you clean rubber or plastic material.

(2) Rust and Corrosion. Check APU components for rust and corrosion. If any bare metal or corrosion exists, clean, and apply a thin coat polyurethane. Report it to your supervisor.

(3) Bolts, Nuts, and Screws. Check them for obvious looseness, missing, bent, or broken condition. You can't try them all with a tool, but look for chipped paint, bare metal, or rust around bolt heads. If you find a bolt, nut, or screw you think is loose, tighten it or report it to your supervisor.

(4) Welds. Look for loose or chipped paint, rust, or gaps where parts are welded together. If you find a bad weld, report it to your supervisor.

(5) Electric Wires and Connectors. Look for cracked, frayed, or broken insulation, bare wires, and loose or broken connectors. Tighten loose connectors. Report any damaged wires to your supervisor.

(6) Hoses and Fluid Lines. Look for wear, damage, and leaks, and make sure clamps and fittings are tight. Wet spots show leaks, but a stain around a fitting or connector can also mean a leak. If a leak comes from a loose fitting or connector, tighten it. If something is broken or worn out, report it to your supervisor.

h. When you check for "operating condition" you look at the component to see if it's serviceable.

2-4. CLEANING AGENTS.

WARNING

Cleaning solvents are flammable and toxic to eyes, skin, and respiratory tract. Skin and eye protections are required when working in contact with cleaning solvents. Avoid repeated or prolonged contact. Work in well-ventilated area only. Keep away from heat, sparks, and open flame, and do not smoke while using cleaning solvents. Failure to observe this warning can cause injury to personnel.

WARNING

USE CAUTION when using cleaning solvents. Cleaning solvents evaporate quickly and can irritate exposed skin if solvents contact skin. in cold weather, contact of exposed skin with cleaning solvents can cause frostbite.

CAUTION

When cleaning inside of enclosure, engine must be COLD (same temperature as outside air). DO NOT point water stream directly at any electrical connection. DO NOT use high pressure water supply system. Damage to engine, electrical system, and other components may result.

NOTE

Only use those authorized cleaning solvents or agents listed in Appendix E, Expendable/Durable Supplies and Materials List.

a. When using water to clean the APU enclosure, always covers all air ducts and exhaust ports using waterproof material. Cover NATO receptacle, quick-disconnect fuel fitting, and control panel assembly. Use water pressure and volume similar to a standard household water supply.

b. After cleaning, allow APU to air dry. Do not use compressed air to dry unit. Do not run engine to decrease drying time.

c. Remove all waterproof material covering ducts and parts applied in step a. before starting APU.

CAUTION

Keep cleaning solvents, gasoline, and lubricants away from rubber or soft plastic parts. They will deteriorate material.

d. When cleaning grease buildup or rusty places, use a cleaning solvent, then apply a thin coat of polyurethane to affected area.

2-5. LEAKAGE DEFINITIONS FOR OPERATOR PMCS.

It is necessary for you to know how fluid leakage affects the APU and mating vehicle. Following are types/classes of leakage an operator needs to know to be able to determine the status of the APU. Learn these leakage definitions and remember - when in doubt, notify your supervisor.

CAUTION

Equipment operation is allowable with minor leakages (Class I or II). Consideration must be given to fluid capacity in the item/system being checked/inspected. When in doubt, notify your supervisor.

When operating with Class I or II leaks, continue to check fluid levels as required in your PMCS.

Class III leaks should be reported immediately to your supervisor.

a. CLASS I - Seepage of fluid (as indicated by wetness or discoloration) not great enough to form drops.

b. CLASS II - Leakage of fluid great enough to form drops but not enough to cause drops to drip from item being checked/inspected.

c. CLASS III - Leakage of fluid great enough to form drops that fall from item being checked/inspected.

Table 2-1. Operator Preventive Maintenance Checks and Services for APU MEP-952B

Item No.	Interval	Location: Item to Check/ Service	Procedure	Not Fully Mission Capable If:
1	Before	Overall Generator Set	a. Inspect for cracks, leaks, dents, corrosion. b. Inspect for loose hardware.	Class II oil or any fuel leaks are present. Significant cracks exist in enclosure or components.
2	Before	Enclosure	a. Inspect top lifting lids for security of attachment. Check that lid latches are secure and lock properly. b. Inspect engine access doors for security of attachment. Check that door latches are secure and lock properly. c. Inspect air intake and exhaust ducts for obstructions and blockages. Clear obstructions and check ducts for damage.	Lids are not secure. Latches do not lock, allowing lids or doors to flap open. Ducts are obstructed or blocked.
3	Before	Local Control Panel (or Remote Control Panel, as required)	a. Inspect for security of attachment. Check for obvious damage to switches and controls. b. Open rear lid. Inspect LED indicators and test points on local control panel for damage.	Control or indicator is damaged to the point it will effect safe operation. LED or test point is damaged.

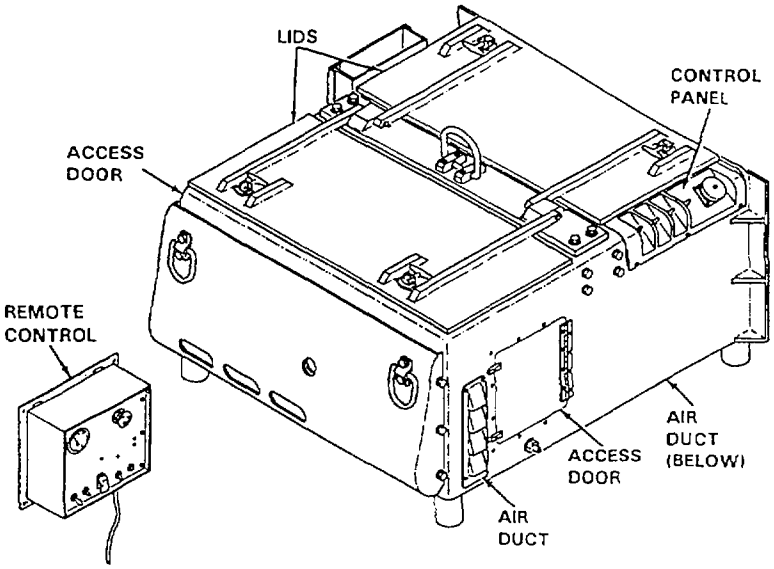

Table 2-1. Operator Preventive Maintenance Checks and Services for APU MEP-952B

Item No.	Interval	Location: Item to Check/ Service	Procedure	Not Fully Mission Capable If:
4	Before	NATO Receptacle and Electrical Cable	a. Inspect electrical cable for cuts, abrasions, damaged insulation, and corrosion. Check connectors for security of attachment. b. Inspect receptacle for damage. Check for signs of electrical short / corrosion.	Electrical cable is cut or damaged in any way. Receptacle is damaged, shorted, or corroded.
5	Before	Fuel Hose /Fitting	a. Inspect fuel fitting for obvious damage or leakage. b. Inspect fuel hose for cuts, cracks, deterioration, or damage. Check end fittings for security of attachment.	Fitting is damaged to the point where it will not allow secure hose connection. Hose is cut or damaged. Leaks are present.
6	Before	Fuel Filter Water Separator	a. Open top rear lid and remove cover from fuel module. Drain water by turning drain valve located on bottom of filter separator. b. Inspect fuel lines and components inside module for leaks. Install cover.	Filter separator is damaged. Leaks are present.

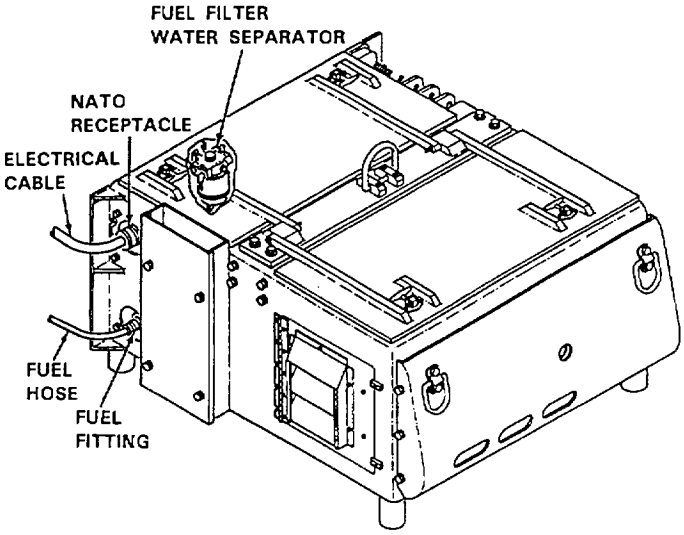

Table 2-1. Operator Preventive Maintenance Checks and Services for APU MEP-952B

Item No.	Interval	Location: Item to Check/ Service	Procedure	Not Fully Mission Capable If:
7	Before	Engine Fuel Lines	Open top lids and inspect engine fuel lines for cuts, tears, loose connections, or evidence of leakage.	Leaks are present or lines are damaged.
8	Before	Engine Oil	**CAUTION** **Always wipe clean oil filler components before starting your lube service. Never use the wrong type or grade of oil. Never use too much oil, as overfilling will cause spillage and harm engine components.** a. Open top front lid and check engine oil level using oil level dipstick. Add specified oil as required using oil filler (see Appendix F). b. Open oil filter access door. Inspect area around oil filter for leaks.	Class III leaks are present. Refer to leakage class definitions for acceptable leak limits.

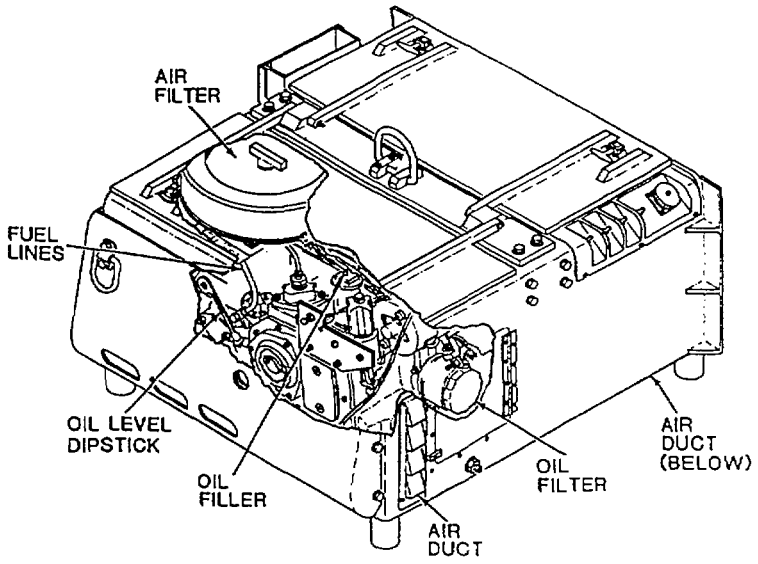

Table 2-1. Operator Preventive Maintenance Checks and Services for APU MEP-952B

Item No.	Interval	Location: Item to Check/ Service	Procedure	Not Fully Mission Capable If:
9	Before	Engine Air Filter	a. Open top front lid and inspect engine air filter for dirt (Para. 3-7). Replace filter if dirty. b. Inspect air inlet hose for cuts or tears. Ensure secure connection to cover. c. Install air filter cover and connect air inlet hose to port on enclosure wall.	Air filter is damaged or missing. Air inlet hose is damaged.
10	During	Air Ducts	Inspect air intake and exhaust ducts for obstructions and blockages. Clear obstructions and check ducts for damage.	Ducts are obstructed or blocked.

Table 2-1. Operator Preventive Maintenance Checks and Services for APU MEP-952B

Item No.	Interval	Location: Item to Check/ Service	Procedure	Not Fully Mission Capable If:
11	During (After 10 Hours of Constant Use)	Engine Oil	**WARNING** **Never service APU while engine is running. Shut down unit before servicing engine oil. Injury to personnel can occur if proper procedures are not followed.** Shut down engine. Check and service engine oil (refer to Table 2-1, item 8).	Oil level is at or below fill level on dipstick. Oil is contaminated.
12	During (After 10 Hours of Constant Use)	Fuel Filter Water Separator	**WARNING** **Never service APU while engine is running. Shut down unit before draining filter separator. Injury to personnel can occur if proper procedures are not followed.** Shut down engine. Drain trapped water (refer to Table 2-1, item 6).	Filter separator is damaged or leaking.
13	After	Engine Fuel Lines	Open top lids and inspect engine fuel lines for cuts, tears, loose connections, or evidence of leakage.	Leaks are present or lines are damaged.
14	After	Overall Generator Set	a. Inspect for cracks, leaks, dents, corrosion. b. Inspect for loose hardware.	Fuel leaks are present. Significant cracks exist in enclosure or components.

Section III. OPERATION UNDER USUAL CONDITIONS

2-6. ASSEMBLY AND PREPARATION FOR USE.

WARNING

If damaged or defective components are discovered, repair must be performed before operation can begin. Perform required repairs and adjustments before proceeding. Do not operate the APU with damaged components. Personnel injury can occur if damaged parts are left unfixed.

WARNING

Prior to placing the APU into service, operating personnel must be familiar with the location and function of all switches, controls, and indicators. Refer to Paragraph 2-1, Operators Controls and Indicators, and Figure 2-1 before continuing with this procedure. Make sure that personnel are familiar with the APU before operating. Follow proper procedures. Failure to do so can result in injury to personnel and damage to equipment.

a. Connect vehicle electrical cable to APU NATO receptacle (32, Figure 2-1). Secure using hold down strap. Ensure positive contact on both ends of cable. Inspect cable for cuts, abrasions, damaged insulation, and corrosion. Replace damaged cable before proceeding.

b. Connect vehicle fuel hose to APU fuel fitting (33). Ensure secure connection on both ends of hose. Inspect hose for cuts, cracks, deterioration, or damage. Replace damaged hose before proceeding.

c. Check and service engine oil in accordance with Appendix F, Lubrication Instructions.

2-7. INITIAL ADJUSTMENTS, DAILY CHECKS, AND SELF TEST.

a. **Initial Adjustments.** No initial adjustments are required for operation of the APU.

b. **Daily Checks**. Perform all operator PMNCS in accordance with Section II.

c. **Self Test.** An indicator lamp self test can be conducted when the APU remote control panel is connected. Refer to paragraph 2-8.b. There is no self test when operating from the local control panel.

2-8. OPERATING PROCEDURES.

WARNING

Do not operate the APU in an enclosed area unless exhaust gases are properly vented to the outside. Exhaust fumes can be harmful if allowed to accumulate. Exhaust discharge contains noxious and deadly gases.

WARNING

Shut down the APU at first sign of failure. Continued operation can result in injury to personnel and will cause damage to equipment. If the APU is shut down by the operation of a safety device, do not operate again until the cause of the shut down has been determined and eliminated.

a. **Operating the APU Using Local Control Panel.**

NOTE

If ambient temperature is below 32° F (0° C), refer to paragraph 2-10, Operation in Unusual Weather, for operating instructions.

(1) Place the REMOTE/ LOCAL switch (4, Figure 2-2) in the LOCAL position.

(2) Place the START / PRIME - RUN / OFF switch (1) in the PRIME - RUN position.

CAUTION

Do not hold START / PRIME - RUN / OFF switch in START position for more than 10 seconds. Damage to starter motor can occur. Wait 30 seconds before placing in START position again. If engine does not run after third attempt, contact maintenance personnel.

(3) Wait 5 seconds, then move the START / PRIME - RUN / OFF switch (1) to the START position. Switch is spring loaded and must be held in place. Release switch when engine starts.

CAUTION

To prevent damage, allow engine to warm up for a few minutes before activating the APU ON switch and applying the load. Additional warm up time may be required in extremely cold conditions. Continually operating a cold engine can shorten its service life.

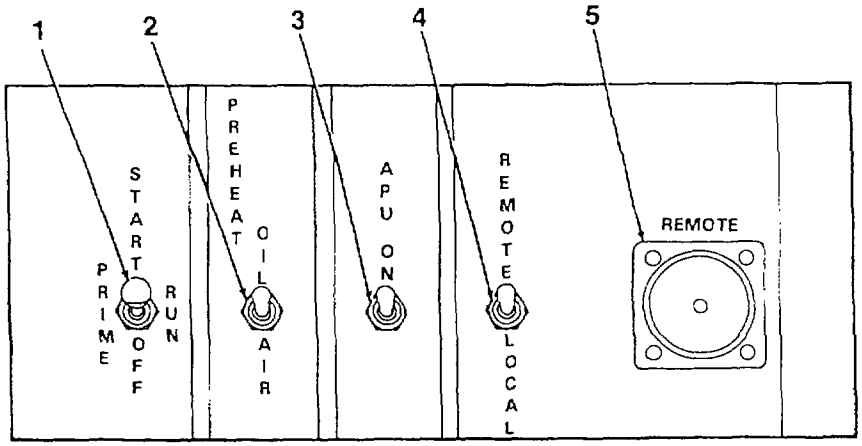

1. START / PRIME - RUN / OFF Switch
2. PREHEAT OIL / AIR Switch
3. APU ON Switch
4. REMOTE / LOCAL Switch
5. REMOTE Control Panel Electrical Connector

Figure 2-2. Operation Using Local Control Panel

(4) Momentarily move the APU ON switch (3) to the ON position, then release. The APU ON switch activates the alternator and applies the load.

b. **<u>Operating the APU Using Remote Control Panel</u>.**

NOTE

If ambient temperature is below 32° F (0º C), refer to paragraph 2-10, Operation in Unusual Weather, for operating instructions.

(1) Connect the remote control panel electrical cable to the REMOTE electrical connector (5, Figure 2-2) on the local control panel.

(2) Place the REMOTE / LOCAL switch (4) in the REMOTE position.

(3) Conduct remote control panel self test by pushing the PRESS TO TEST LAMPS push button (5, Figure 2-3). All LED indicator lights (3, 4, 7, 9) shall illuminate. If an indicator light fails to illuminate, refer trouble to next higher level of maintenance.

(4) Place the START / PRIME RUN / OFF switch (11) in the PRIME RUN position.

CAUTION

Do not hold START / PRIME - RUN / OFF switch in START position for more than 10 seconds. Damage to starter motor can occur. Wait 30 seconds before placing in START position again. If engine does not run after third attempt, contact maintenance personnel.

(5) Wait 5 seconds, then move the START / PRIME - RUN / OFF switch (I 1) to the START position. Switch is spring loaded and must be held in place. Release switch when engine starts.

CAUTION

To prevent damage, allow engine to warm up for a few minutes before activating the APU ON switch and applying the load. Additional warm up time may be required in extremely cold conditions. Continually operating a cold engine can shorten its service life.

(6) Momentarily move the APU ON switch (6) to the ON position, then release. The APU ON switch activates the alternator and applies the load.

(7) Check voltmeter (1) for proper voltage. Voltmeter indicator should fall within the green band.

c. **APU Shut Down.** To stop the engine and shut down the APU, place the START / PRIME - RUN / OFF switch (1, Figure 2-2 or 11, Figure 2-3) in the OFF position.

d. **Emergency Shutdown**. In an emergency situation, press the EMERGENCY STOP push button (2, Figure 2-3) to immediately shut down the APU. The push button must be pulled out to the off position before the APU can be started again. Ensure START / PRIME - RUN / OFF switch (11) is moved to OFF position.

2-9. OPERATION OF AUXILIARY EQUIPMENT.

a. Auxiliary equipment consists of the remote control panel and an auxiliary fuel hose. Refer to paragraph 2-8.b. for operation of the remote control panel.

b. An auxiliary fuel hose is provided to allow operation of the APU using an external (to the vehicle) fuel supply. Connect the auxiliary fuel hose as follows:

(1) Disconnect vehicle fuel hose from the APU fuel fitting (33, Figure 2-1).

(2) Remove auxiliary fuel hose from underside of APU enclosure.

(3) Connect one end of auxiliary fuel hose to fuel fitting. Connect opposite end to external fuel supply. Ensure both ends are tightened securely.

(4) Operate APU in accordance with normal procedures (paragraph 2-8).

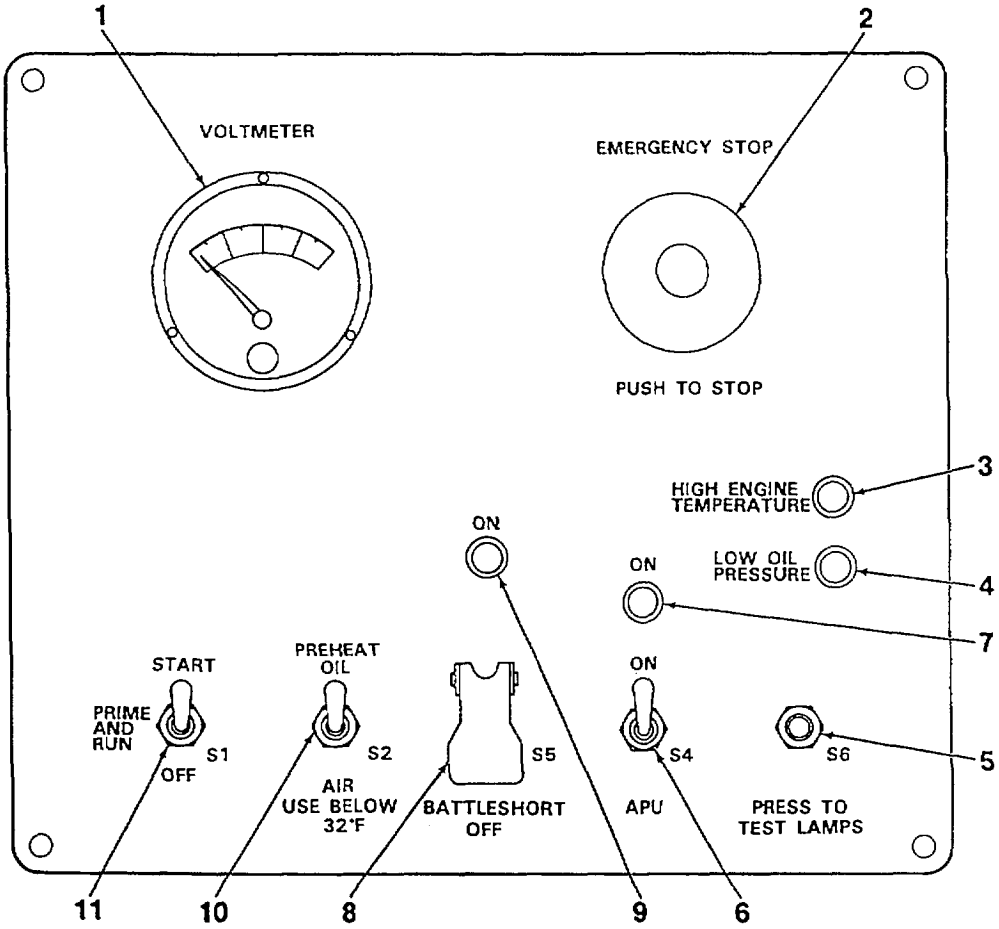

1. VOLTMETER
2. EMERGENCY STOP Push Button
3. HIGH ENGINE TEMPERATURE Indicator
4. LOW OIL PRESSURE Indicator
5. PRESS TO TEST LAMPS Switch
6. APU ON Switch
7. APU ON Indicator
8. BATTLE SHORT Switch
9. Battle Short ON Indicator
10. PREHEAT OIL / AIR Switch
11. START / PRIME - RUN / OFF Switch

Figure 2-3. Operation Using Remote Control Panel

Section IV. OPERATION UNDER UNUSUAL CONDITIONS

2-10. OPERATION IN UNUSUAL WEATHER.

a. If unit is to be operated at ambient temperature below 0° F (-18° C) for an extended period, change engine oil to MIL-L-46167, 5W-30. Refer to Appendix F for oil servicing.

b. If ambient temperature is below 32° F (0° C) , the PREHEAT OIL / AIR switch (item 2, Figure 2-2 or item 10, Figure 2-3) should be used prior to starting the engine. Perform the following procedures:

(1) The PREHEAT OIL / AIR switch is a three-position switch, spring-loaded to the off position. Moving the switch to the OIL (up) position energizes a glow plug located in the engine oil reservoir. Moving the switch to the AIR (down) position energizes two glow plugs located in the engine intake manifold. The heater elements (oil or air) will remain on for as long as the switch is held in the OIL or AIR position.

(2) Start the APU in accordance with paragraph 2-8.

c. When operating the APU in extremely dusty or sandy conditions, the engine air filter element and air intake ducts must be inspected frequently to ensure that clogging or obstruction has not occurred.

2-11. EMERGENCY PROCEDURES.

WARNING

APU battle short mode is for emergency operation only. Prolonged use under this mode could damage the APU or pose potential injury hazards to personnel.

a. The APU is capable of operation with a system fault. The BATTLE SHORT switch (8, Figure 2-3) located on the remote control panel allows the APU to override anticipated system faults to continue operation.

b. To operate the APU in battle short mode, lift protective cover and place BATTLE SHORT switch (8) in the ON position. The battle short ON indicating light (9) will illuminate to indicate battle short mode.

2-12. NUCLEAR, BIOLOGICAL, AND CHEMICAL (NBC) DECONTAMINATION PROCEDURES.

Refer to the vehicle maintenance manual, TM 9-2350-277-10, for NBC decontamination procedures.

2-13. HAND STARTING (MANUAL ENGINE CRANKING) PROCEDURES.

a. Before attempting to hand start, check for loose connections, broken wires, or dirty connectors. Check for proper electrolyte level in battery(s) and service as required. The hand start procedure is to be used when battery voltage is less than 20 VDC.

b. Open the top front lid (1, Figure 2-4) completely and allow it to rest on the rear lid.

c. Remove engine hand crank from under side of APU. Insert hand crank through opening in nose piece (3) and into the engine's manual crank receptacle. Turn hand crank counterclockwise slightly to engage.

d. Place the REMOTE / LOCAL switch on local control panel in the LOCAL position.

e. Place the START / PRIME RUN / OFF switch in the PRIME RUN position. Fuel pump will begin operating.

f. Using your right hand, depress top of stop/hold solenoid (2) until it reaches maximum travel length and stops. Continue to hold the solenoid in the depressed position until it latches in step j.

i. Using your left hand, crank engine using hand crank until RPMs reach adequate speed to start engine.

j. The APU is now operating. Continue to hold the stop/hold solenoid (2) in the depressed position. Depress and release the manual start switch (4) , located on the fuel solenoid bracket.

k. Momentarily move the APU ON switch on local control panel to the ON position, then release. The APU ON switch activates the alternator and applies the load. The APU should now be producing power and charging batteries. The stop/hold solenoid will latch in place.

l. Close top front lid (1) and secure using lid latches.

m. Replace engine hand crank onto under side of APU.

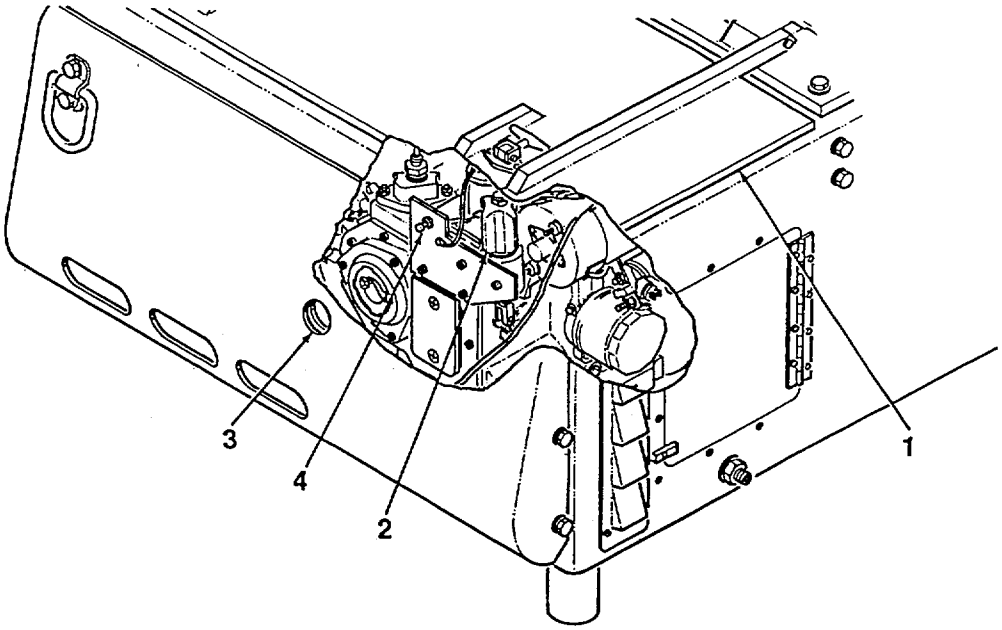

1. Top Front Lid
2. Stop/Hold Solenoid
3. Nose Piece
4. Manual Start Switch

Figure 2-4. Hand Cranking

CHAPTER 3
OPERATOR MAINTENANCE INSTRUCTIONS

Section I. LUBRICATION INSTRUCTIONS

3-1. LUBRICATION INSTRUCTIONS.

Operator level lubrication instructions for the APU are contained in Appendix F of this TM. All lubrication instructions are mandatory.

Section II. OPERATOR TROUBLESHOOTING PROCEDURES

3-2. GENERAL.

This section contains operator troubleshooting information and tests for the APU. Troubleshooting logic trees will aide in locating and correcting minor APU malfunctions. Each malfunction or trouble symptom is addressed and is followed by a series of inspections or tests necessary to determine the probable cause and corrective action.

3-3. TROUBLESHOOTING.

a. This chapter does not list all possible malfunctions that may occur, all tests or inspections that may be performed, or all corrective actions for each malfunction. Only those checks and tests authorized for the operator level are covered. If a malfunction is not listed, or is not remedied by corrective actions, notify personnel at a higher maintenance level.

b. If a malfunction or failure occurs during operation or performance check, perform troubleshooting in accordance with logic tree diagrams. Refer to Table 3-1, Malfunction Index, for determining applicable troubleshooting procedure.

Table 3-1. Malfunction Index

MALFUNCTIONS	Table
Engine will not crank (local control panel operation)	3-2
Engine will not crank (remote control panel operation)	3-3
Engine cranks but will not start	3-4
Engine starts and stops	3-5
Engine overheats, high temperature light (LED) illuminates	3-6
Low oil pressure light (LED) illuminates	3-7
APU runs but does not charge	3-8
Engine emits white smoke	3-9

Table 3-2. ENGINE WILL NOT CRANK (LOCAL CONTROL PANEL OPERATION)

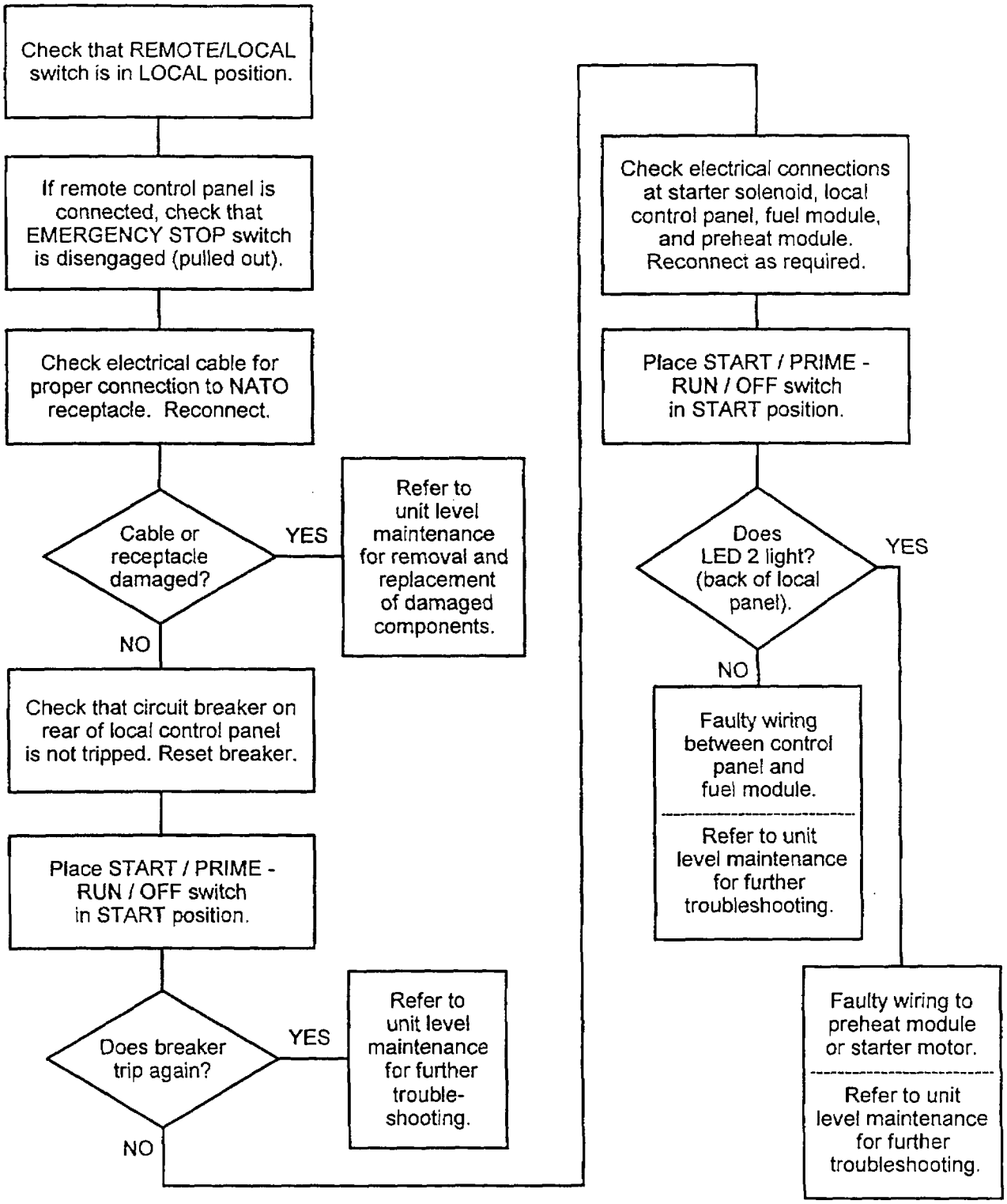

Table 3-3. ENGINE WILL NOT CRANK (REMOTE CONTROL PANEL OPERATION)

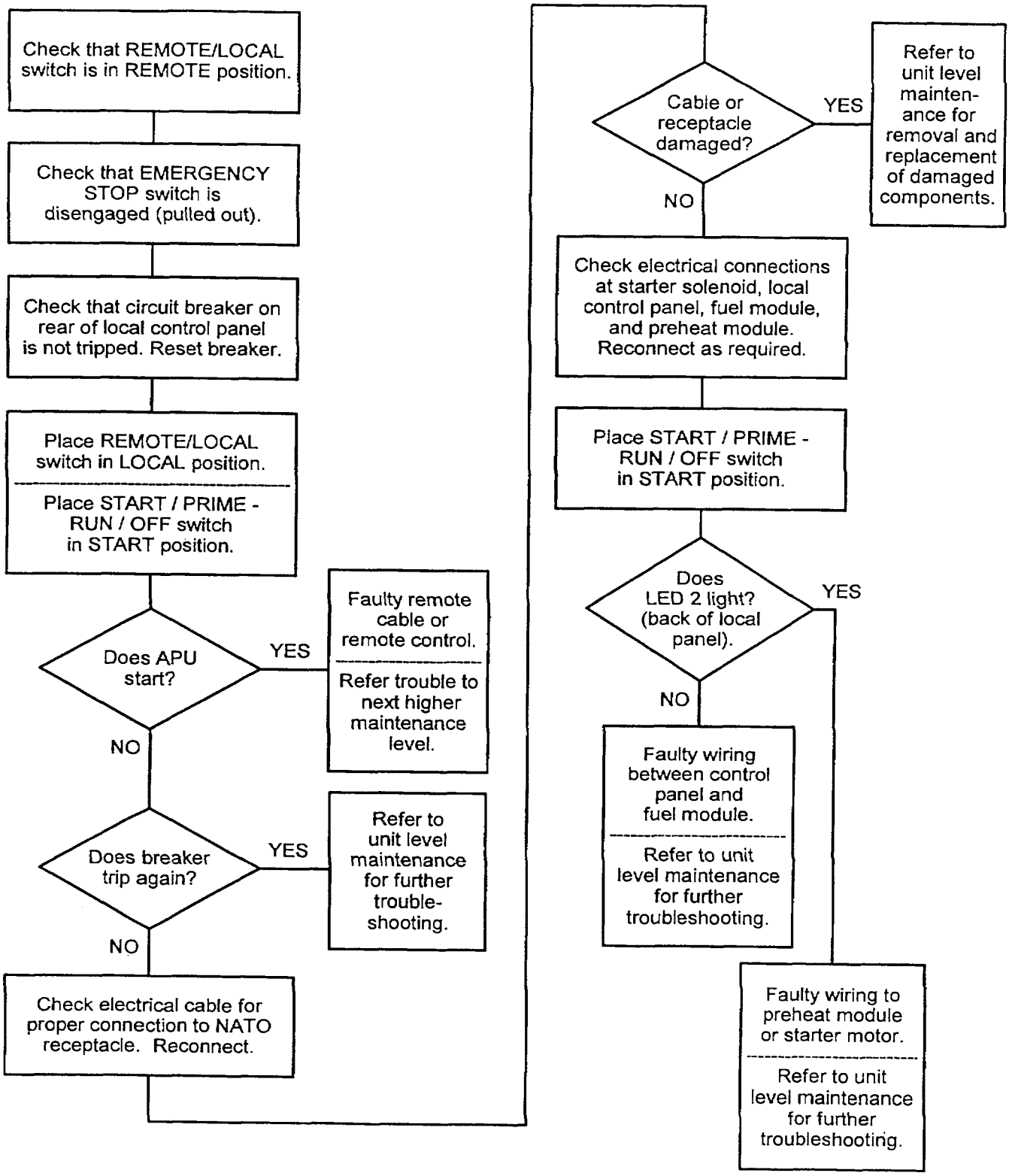

Table 3-4. ENGINE CRANKS BUT WILL NOT START

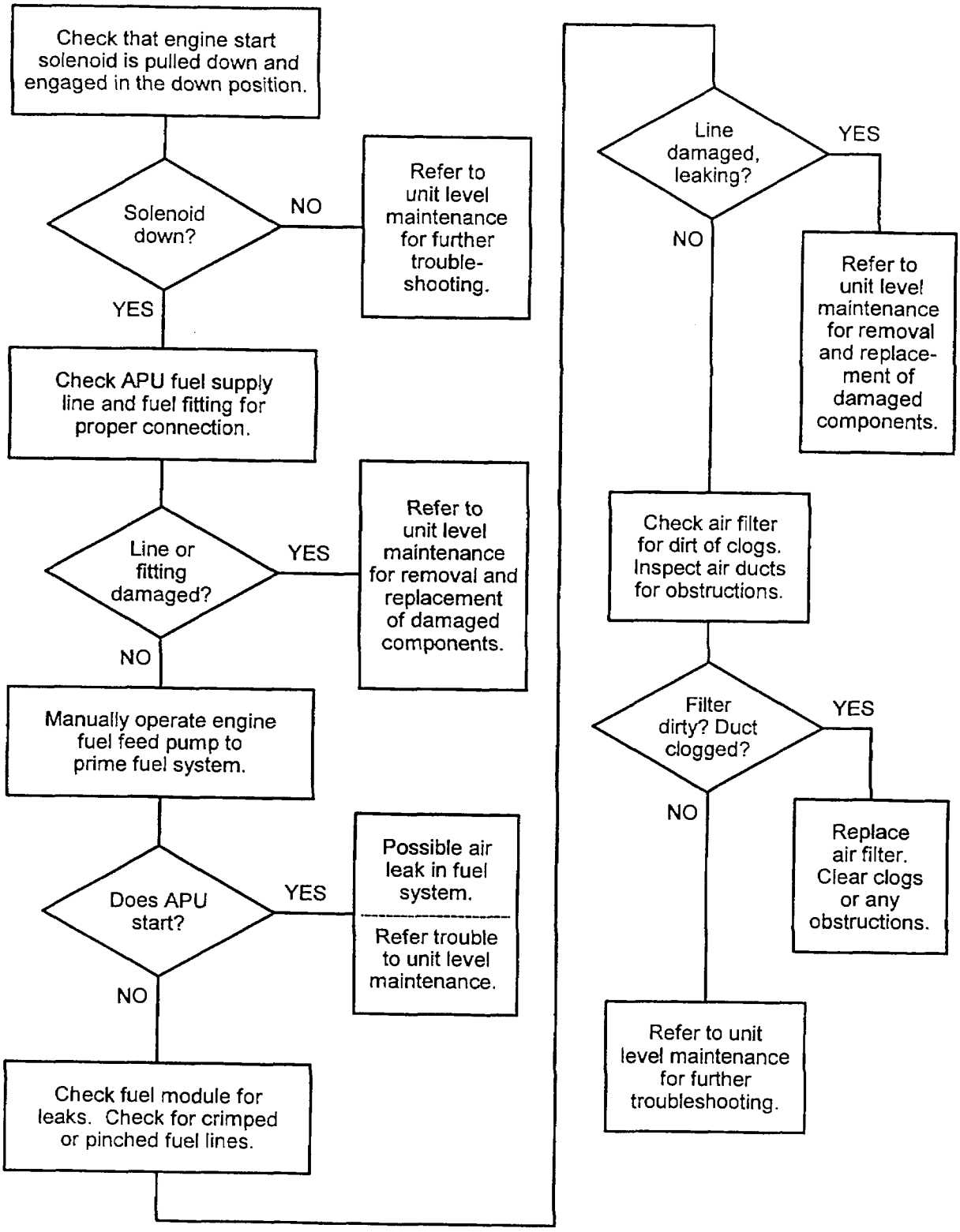

Table 3-5. ENGINE STARTS AND STOPS

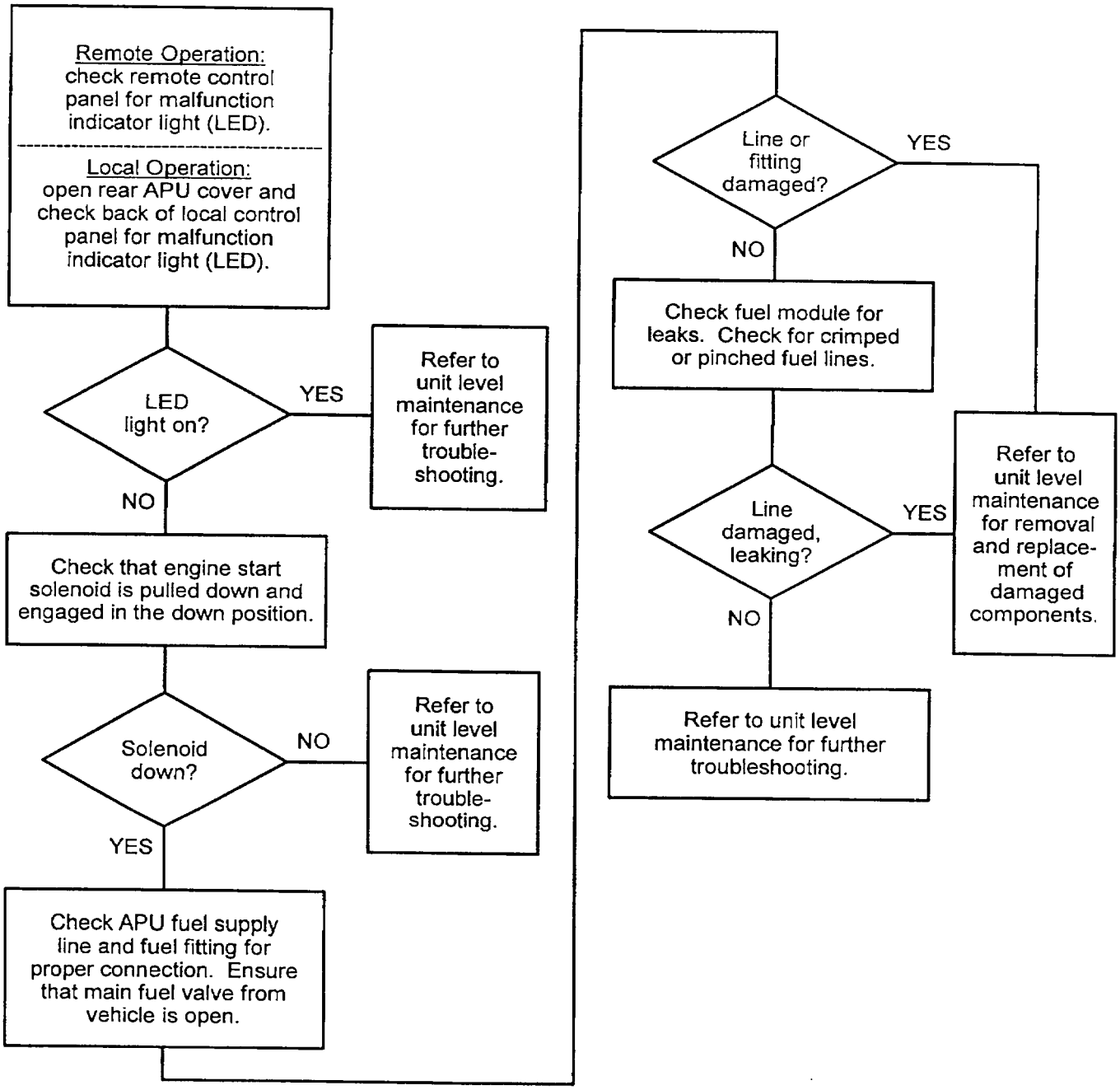

Table 3-6. ENGINE OVERHEATS, HIGH TEMPERATURE LIGHT ILLUMINATES

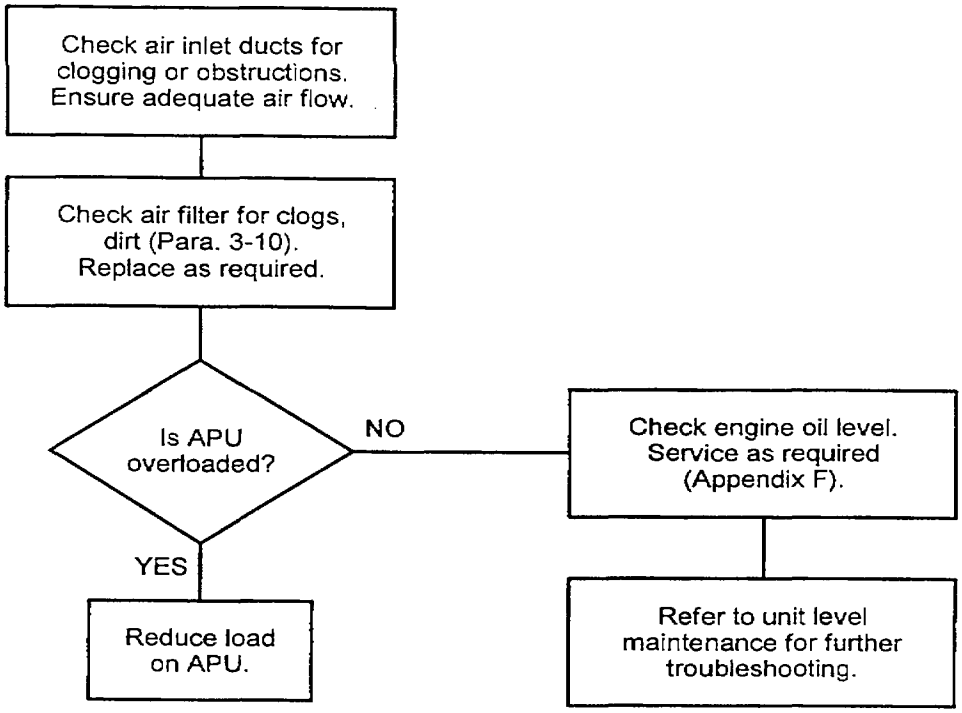

Table 3-7. LOW OIL PRESSURE LIGHT ILLUMINATES

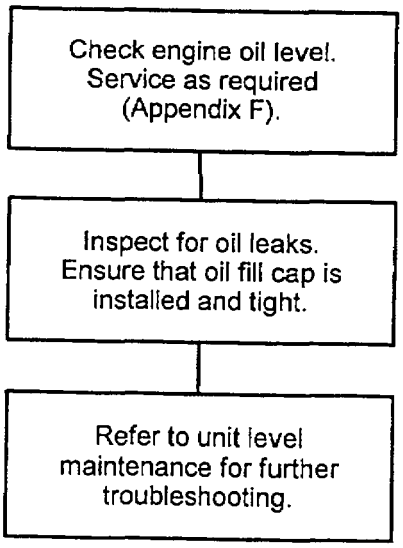

Table 3-8. APU RUNS BUT DOES NOT CHARGE

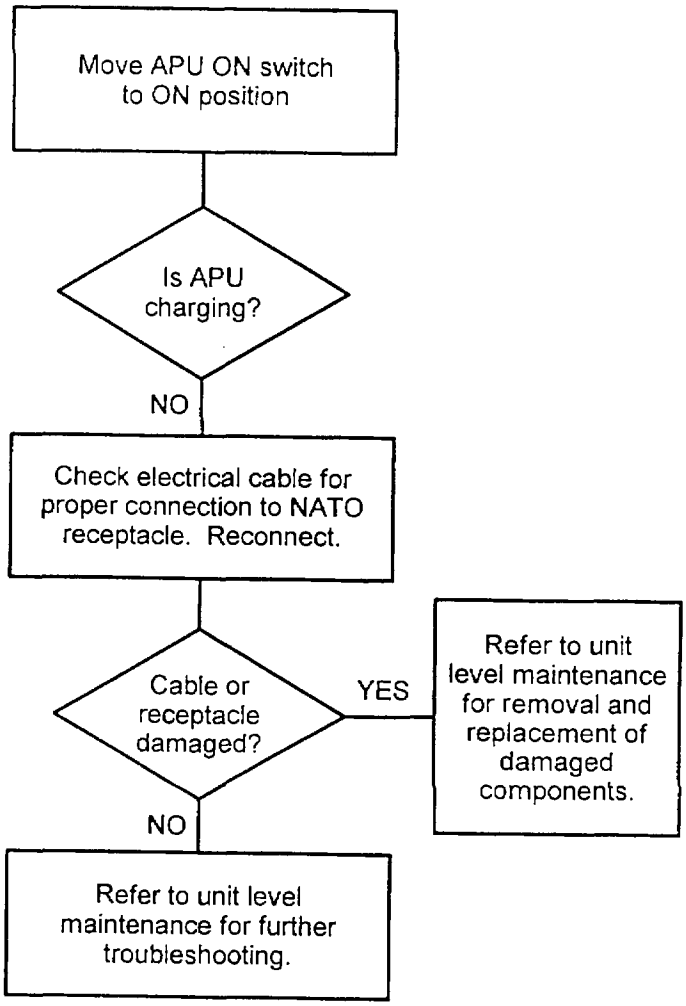

Table 3-9. ENGINE EMITS WHITE SMOKE

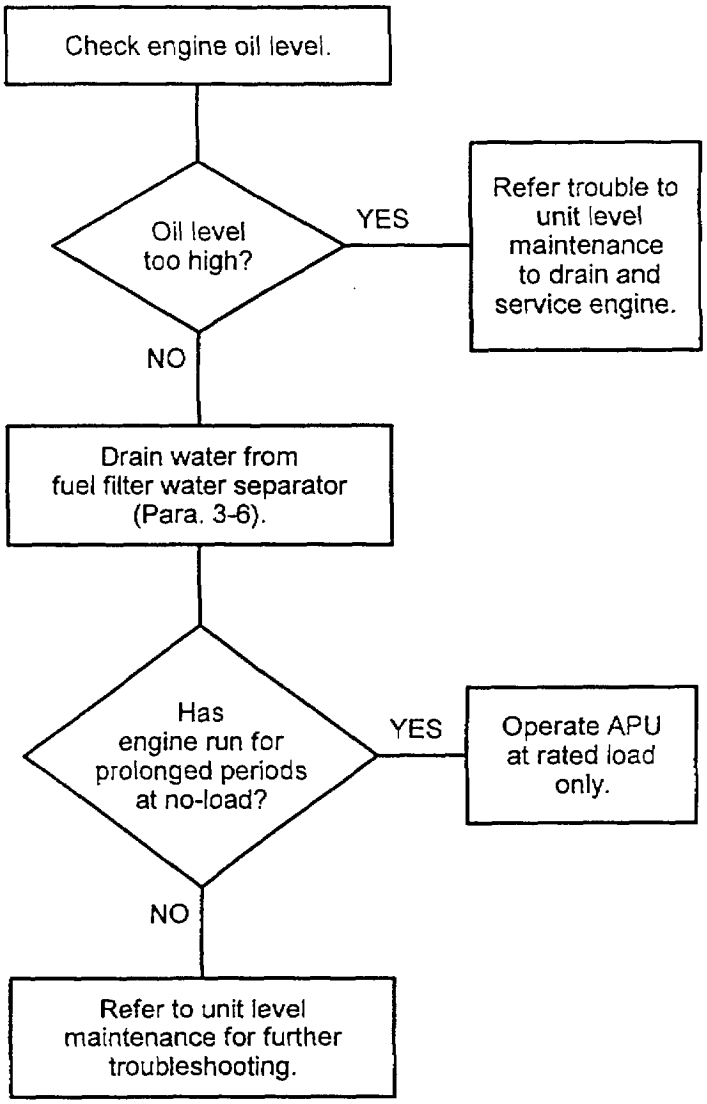

Section III. OPERATOR MAINTENANCE PROCEDURES

3-4. GENERAL.

This section contains information on the maintenance of the APU that is the responsibility of the operator. If a procedure is not located in this chapter, you are not authorized to perform it.

WARNING

Never service, inspect, or perform maintenance on the APU while engine is running. Always shut down unit before servicing. Allow engine to cool before handling components. Failure to do so can result in severe bums and injuries.

3-5. FUEL MODULE AND FUEL HOSES.

a. Open top lids on APU and inspect inside of enclosure for evidence of fuel leakage. Inspect engine fuel hoses for cuts, tears, or evidence of deterioration. Check that hoses are securely fastened to fittings.

b. Slide cover latches (1, Figure 3-1) back to disengage from screws, and remove fuel module cover (2). Inspect fuel hoses for cuts, tears, or evidence of deterioration. Check that hoses are securely fastened to fittings. Inspect for signs of leakage.

c. Inspect electrical wiring inside fuel module housing for damage. Check connectors for security of attachment.

d. If damage is found, notify unit maintenance personnel for repair.

3-6. FUEL FILTER WATER SEPARATOR.

a. Open top rear lid on APU to gain access to fuel module.

b. Slide cover latches (1, Figure 3-1) back to disengage, and remove fuel module cover (2). Inspect fuel hoses for cuts, tears, or evidence of deterioration. Check that hoses are securely fastened to fittings. Inspect for signs of leakage.

c. Inspect separator bowl (3) for trapped water. Drain water by turning drain valve (4). After water is drained, close drain valve.

d. Fit fuel module cover (2) onto fuel module and secure using cover latches (1). Close top rear cover and secure by turning lid latches.

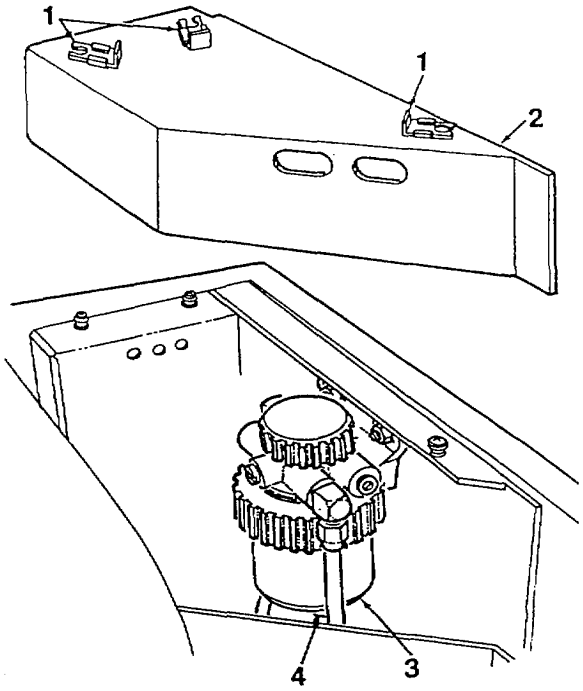

1. Cover Latch
2. Fuel Module Cover
3. Separator Bowl
4. Drain Valve

Figure 3-1. Fuel Filter Water Separator Draining

3-7. ENGINE AIR FILTER.

a. Open top front lid on APU to gain access to engine air filter.

b. Disconnect air hose (1, Figure 3-2) from air inlet port. Disconnect hose from filter cover (3) if required by loosening clamp (2).

c. Remove air filter cover (3) from filter base (4) by unscrewing wing screw (5). Wing screw is held on cover by a retainer clip.

d. Remove air filter (6) from filter base (4) and discard. Inspect intake guard (7) for damage and replace as required.

e. Inspect air hose (1) for cuts, cracks, or tears. Replace air hose if damaged.

f. Install new air filter (6) onto filter base (4).

g. Install air filter cover (3) and secure by tightening wing screw (5).

h. Connect air hose (.) to air filter cover (3) and tighten clamp (2). Connect air hose to air inlet port.

i. Close top front lid and secure by turning lid latches.

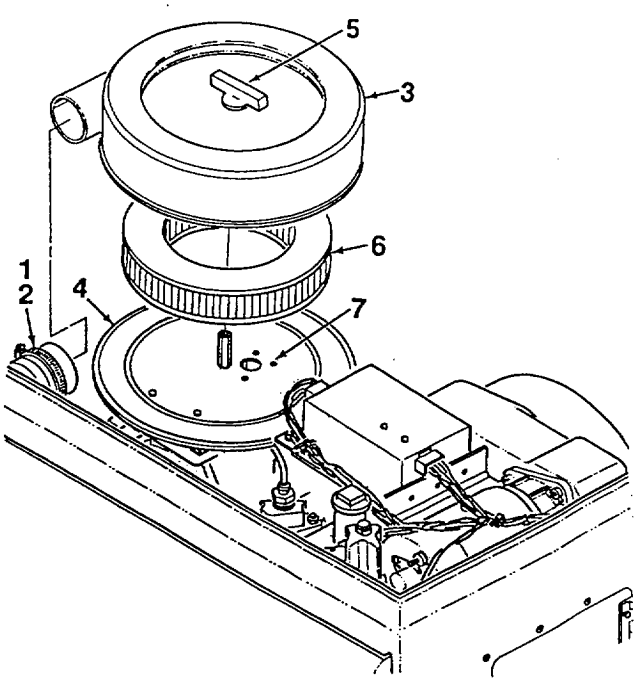

1. Air Hose
2. Clamp
3. Air Filter Cover
4. Filter Base
5. Wing Screw
6. Air Filter
7. Intake Guard

Figure 3-2. Air Filter Replacement

CHAPTER 4
UNIT MAINTENANCE INSTRUCTIONS

Section I. LUBRICATION INSTRUCTIONS

4-1. GENERAL.

a. These lubrication instructions are for unit level (O) maintenance personnel. Lube intervals (on-condition or hard time) are based on normal operation. Lube more during constant use, and less during inactive periods. Use correct grade of lubricant for seasonal temperature expected.

CAUTION

Always wipe clean oil filler components before starting your lube service. Never use the wrong type or grade of oil. Never use too much oil, as overfilling will cause spillage and harm engine components.

b. The engine oil filter shall be changed when:

- It is known to be contaminated or clogged.
- The prescribed hard time interval has arrived.
- Engine oil is drained or changed.

c. Open oil drain valve (1, Figure 4-1) and drain engine oil. Manually crank engine three revolutions using hand crank to drain remaining oil from oil cooler and lines. Close oil drain valve.

d. Remove and replace engine oil filter (Para. 4-50).

e. Remove oil filler cap (2) and service with appropriate oil. Check level using oil level dipstick (3). Start engine and run for two minutes. Stop engine and recheck oil level. Service as required.

f. This APU is not enrolled in the Army Oil Analysis Program (AOAP). HARDTIME INTERVALS APPLY.

g. For equipment under manufacturer's warranty, hardtime oil service intervals shall be followed. Intervals shall be shortened if lubricants are known to be contaminated or if operation is under adverse conditions (such as longer than usual operating hours, extended idling periods, extreme dust).

Table 4-1. Lubricant Table for APU

Temperature Range	Lubricant Mil. Symbol Specification	Capacity	Interval	Man-hour
0 to +120° F (-18 to +49° C)	MIL-L-2104, 15W-40	2.7 QTS (2.6 LTRS)	300 hours	0.25
-25 to +15° F (-32 to -9.5° C)	MIL-L-46167, 5W-30	2.7 QTS (2.6 LTRS)	300 hours	0.25

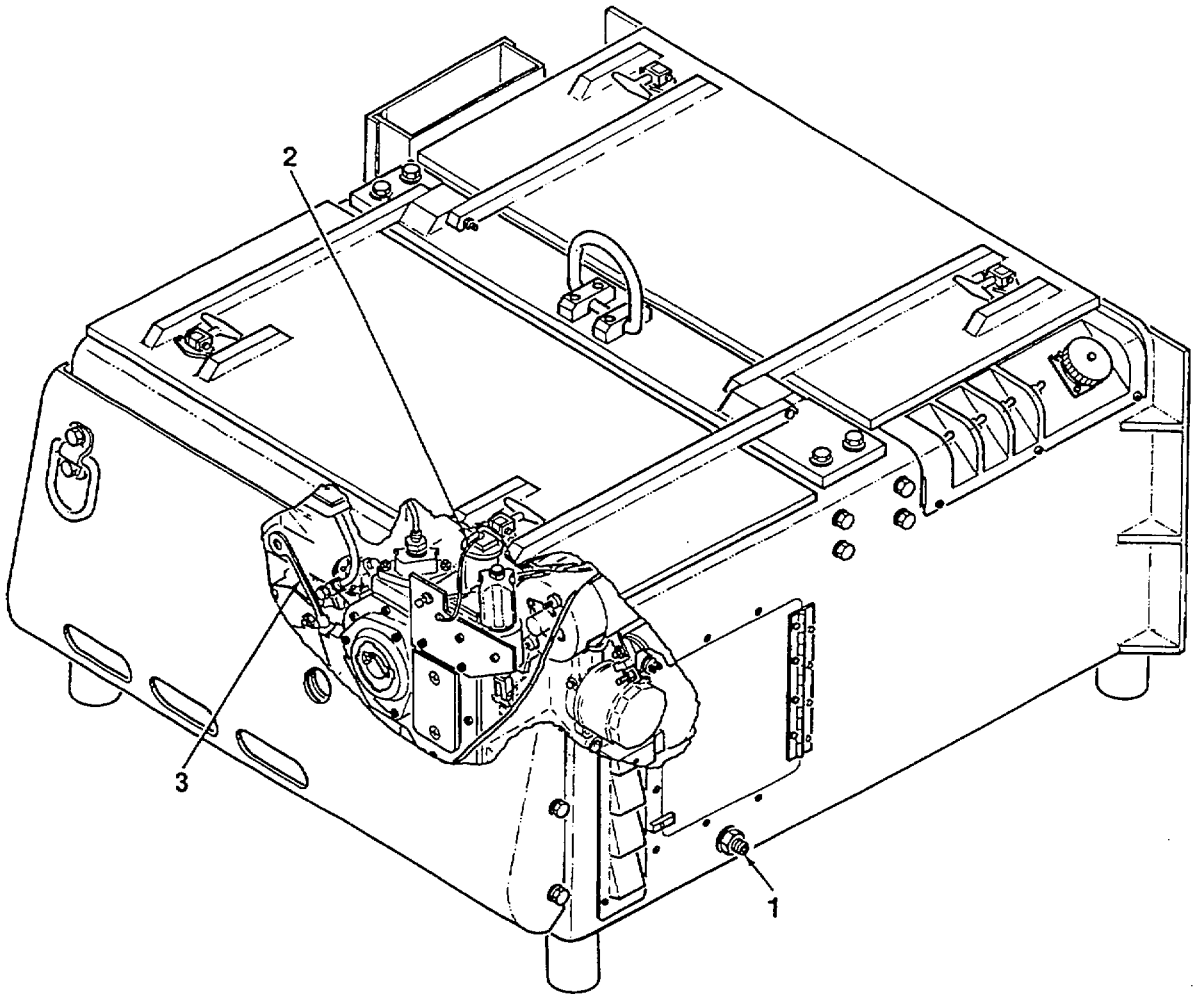

1. Oil Drain Valve
2. Oil Filler
3. Oil Level Dipstick

Figure 4-1. Engine Oil Servicing

Section II. REPAIR PARTS; TOOLS; SPECIAL TOOLS; TEST, MEASUREMENT, AND DIAGNOSTIC EQUIPMENT (TMDE); AND SUPPORT EQUIPMENT

4-2. COMMON TOOLS AND EQUIPMENT.

a. For authorized common tools and equipment, refer to the Modified Table of Organization and Equipment (MTOE), CTA 50-970, or CTA 8-100, as applicable to your unit.

b. Tool Kit, General Mechanics; Automotive, Supply Catalog SC5180-90-CL-N26, is the primary supply source for tools used in maintenance of the APU.

4-3. SPECIAL TOOLS, TMDE, AND SUPPORT EQUIPMENT.

Refer to Appendix G, Repair Parts and Special Tools List, for complete data on special tools and equipment required for APU maintenance. Refer to the Maintenance Allocation Chart (MAC), Appendix B, for special tools and equipment used at the unit maintenance level.

4-4. REPAIR PARTS.

a. Refer to Appendix I for a list of Mandatory Replacement Parts required for unit level maintenance of the APU.

b. Repair parts are listed and illustrated in Appendix G, Repair Parts and Special Tools List.

Section III. SERVICE UPON RECEIPT

4-5. GENERAL.

Refer to paragraph 2-6 for instructions on unpacking, assembly, and servicing of APU components.

Section IV. UNIT PREVENTIVE MAINTENANCE CHECKS AND SERVICES (PMCS)

4-6. GENERAL.

Unit Preventive Maintenance Checks and Services (PMCS) means systematic caring, inspecting, and servicing of equipment to keep it in good condition and to prevent breakdowns. This section lists PMCS required for the APU and authorized for the unit maintenance level. Your mission is to ensure that the APU is ready for operation at all times. It must be inspected so that defects may be discovered and corrected before they result in damage or failure.

a. Be sure to perform your PMCS in the same order, so it gets to be a habit. Once you have had some practice, you will quickly spot anything wrong.

b. Pay attention to WARNINGS, CAUTIONS, and NOTES.

c. Perform PMCS tasks at the intervals noted in Table 4-3. Do not skip PMCS intervals.

d. Use DA Form 2404 or 5988E (Equipment Inspection and Maintenance Worksheet) to record any faults you discover, unless you can fix them. You DO NOT need to record faults that you fix.

4-7. PMCS PROCEDURES.

a. Your Preventive Maintenance Checks and Services, Table 4-3, lists inspections and care required to keep your APU in good operating condition.

b. The "INTERVAL" column of Table 4-3 tells you when to do a certain check or service. Intervals are based on operating hours, unless otherwise noted.

c. The "PROCEDURE" column of Table 4-3 tells you how to do required checks and services. Tolerances, adjustment limits, and instrument readings are included as applicable. When replacement or repair of a component is required, the procedures column will direct you to the appropriate task.

NOTE

Terms "ready/available" and "mission capable" refer to same status: Equipment is on hand and ready to perform its combat missions. (See DA Pam 738-750).

d. The "NOT FULLY MISSION CAPABLE IF" column in Table 4-3 tells you when your APU is nonmission capable and why the APU cannot be used.

e. If the APU does not perform as required, perform unit level troubleshooting, Section V.

f. If anything looks wrong and you can't fix it, write it on your DA Form 2404 or 5988E. IMMEDIATELY report it to your supervisor.

g. When you perform PMCS you will always need a rag or two (Item 7, App. E). Following are checks that are common to the entire APU:

(1) Keep It Clean. Dirt, grease, oil, and debris only get in the way and may cover up a serious problem. Clean as you work and as needed. Use dry cleaning solvent on all metal surfaces. Use soap and water when you clean rubber or plastic material.

(2) Rust and Corrosion. Check APU components for rust and corrosion. If any bare metal or corrosion exists, clean, and apply a thin coat of polyurethane. Report it to your supervisor.

(3) Bolts, Nuts, and Screws. Check them for obvious looseness, missing, bent, or broken condition. You can't try them all with a tool, but look for chipped paint, bare metal, or rust around bolt heads. If you find a bolt, nut, or screw that's loose, tighten it.

(4) Welds. Look for loose or chipped paint, rust, or gaps where parts are welded together. If you find a bad weld, report it to your supervisor.

(5) Electric Wires and Connectors. Look for cracked, frayed, or broken insulation, bare wires, and loose or broken connectors. Tighten loose connectors. Report any damaged wires to your supervisor.

(6) Hoses and Fluid Lines. Look for wear, damage, and leaks, and make sure clamps and fittings are tight. Wet spots show leaks, but a stain around a fitting or connector can also mean a leak. If a leak comes from a loose fitting or connector, tighten it. If something is broken or worn out, replace it.

4-8. CLEANING AGENTS.

WARNING

Cleaning solvents are flammable and toxic to eyes, skin, and respiratory tract. Skin and eye protections are required when working in contact with cleaning solvents. Avoid repeated or prolonged contact. Work in well-ventilated area only. Keep away from heat, sparks, and open flame, and do not smoke while using cleaning solvents. Failure to observe this warning can cause injury to personnel.

WARNING

USE CAUTION when using cleaning solvents. Cleaning solvents evaporate quickly and can irritate exposed skin if solvents contact skin. in cold weather, contact of exposed skin with cleaning solvents can cause frostbite.

CAUTION

When cleaning inside of enclosure, engine must be COLD (same temperature as outside air). DO NOT point water stream directly at any electrical connection. DO NOT use high pressure water supply system. Damage to engine, electrical system, and other components may result.

NOTE

Only use those authorized cleaning solvents or agents listed in Appendix E, Expendable/Durable Supplies and Materials List.

a. When using water to clean the APU enclosure, always cover all air ducts and exhaust ports using waterproof material to prevent damage to components. Cover NATO receptacle, fuel fitting, and control panel assembly. Use water pressure and volume similar to a standard household water supply.

b. After cleaning, allow APU to air dry. Do not use compressed air to dry unit. Do not run engine to decrease drying time.

c. Remove all waterproof material covering ducts and parts applied in step a. before starting APU.

CAUTION

Keep cleaning solvents, gasoline, and lubricants away from rubber or soft plastic parts. They will deteriorate material.

d. When cleaning grease buildup or rusty places, use cleaning solvent (Item 9, App. E) , then apply a thin coat of polyurethane to affected area.

Table 4-2. Unit Preventive Maintenance Checks and Services for Generator Set MEP-952B

Item No.	Interval	Location: Item to Check/ Service	Procedure	Not Fully Mission Capable If:
1	Quarterly	Overall Generator Set	a. Inspect for cracks, leaks, dents, and corrosion. b. Inspect for loose hardware.	Class m oil or any fuel leaks are present. Significant cracks exist in enclosure or components.
2	Quarterly	Local Control Panel	a. Inspect for security of attachment. Check for obvious damage. b. Test switches for smooth operation. Check for normal indications. c. Perform electrical check of system using control panel test points (Table 4-4).	Control or indicator is damaged to the point it will affect safe operation.
3	Quarterly	Remote Control Panel	Inspect fault indicators for proper operation using press to test button.	Control or indicator is damaged to the point it will affect safe operation.
4	Quarterly	Fuel System	a. Inspect fuel filter water separator for damage. Inspect for water and drain. b. Inspect fuel float valve bowl for cracks or leaks. c. Inspect all fuel lines for cuts, tears, loose connections, or evidence of leakage.	Leaks are present or lines are damaged. Fuel float valve leaks.
5	Quarterly	Engine	a. Inspect engine fuel piping for damage, kinks, evidence of leakage. b. Inspect hoses for evidence of wear, cracking, and deterioration. Check connections for tightness.	Leaks are present or hoses are damaged. Loose connections.

Table 4-2. Unit Preventive Maintenance Checks and Services for Generator Set MEP-952B

Item No.	Interval	Location: Item to Check/ Service	Procedure	Not Fully Mission Capable If:
6	Quarterly	Exhaust System	a. Inspect exhaust cover for cracks or dents. Ensure secure attachment. b. Inspect exhaust pipe for cracks or holes. Ensure secure attachment to muffler. c. Inspect exhaust muffler for obvious damage. Ensure secure attachment.	Any type of exhaust leak is present.
7	Quarterly	Electrical System	a. Inspect APU wiring harness for damage, loose connections, evidence of short circuit. b. Inspect electrical receptacles for damage, corrosion, bent, broken or missing pins. Clean deposits from receptacles.	Wires are damaged. Receptacle pins are damaged or missing.
8	300 Hours	Engine Oil System	Drain and replenish engine lubricating oil. Refer to Lubrication Instructions (Para. 4-1). Remove and replace engine oil filter (Para. 4-50).	
9	300 Hours	Fuel Filters	Replace fuel filter water separator filter cartridge (Para. 4-31) and in-line fuel filter (Para. 4-44).	
10	300 Hours	Engine Oil Cooler	Inspect engine oil cooler for leaks.	Class III oil leaks are present.
11	300 Hours	Engine Cylinder Head	Adjust engine valve clearance (Para. 4-47).	
12	1000 Hours	Engine Fuel Injector	Replace fuel injector (Para. 4-48).	

Section V. UNIT TROUBLESHOOTING

4-9. GENERAL.

This section contains unit level troubleshooting information and tests for the APU. Troubleshooting logic trees will help in locating and correcting minor APU malfunctions. Each malfunction or trouble symptom is addressed and is followed by a series of inspections or tests necessary to determine the probable cause and corrective action.

4-10. TROUBLESHOOTING.

a. This chapter does not list all possible malfunctions that may occur, all tests or inspections that may be performed, or all corrective actions for each malfunction. Only those checks and tests authorized for the unit level are covered. If a malfunction is not listed, or is not remedied by corrective actions, notify personnel at a higher maintenance level.

b. Prior to using troubleshooting diagrams, be sure you have performed all normal operational checks. Refer to the system electrical schematic (Figure FO-1) , wiring diagrams, and LED and Test Point Table (Table 4-4) for assistance in troubleshooting electrical components.

c. Refer to Table 4-3, Malfunction Index, for determining applicable troubleshooting procedure.

Table 4-3. Malfunction Index

	Table
ENGINE	
Engine will not crank	4-5
Engine will not crank, control panel circuit breaker trips continuously	4-6
Engine cranks but will not start	4-7
Engine will not start in cold weather	4-10
Engine starts and stops	4-11
Engine speed fluctuates	4-12
Engine overheats	4-13
Engine hammers	4-14
Engine emits black smoke	4-15
Engine emits white smoke	4-16
FUEL SYSTEM	
Fuel system will not energize, no fuel to the APU	4-9
GENERAL SYSTEM MALFUNCTIONS	
Engine operates, but no generator voltage or below rated voltage	4-8
APU shutdown, low oil pressure	4-17
Engine start / hold solenoid does not stay engaged	4-18

Table 4-4. LED and Test Point Table

LED or Test Point	Location	Indication
LED 1 - AIR PH	Engine preheat module	Illuminates when are engine air heater elements are energized (PREHEAT OIL/AIR switch is in AIR position).
LED 2 - OIL PH	Engine preheat module	Illuminates when are engine oil heater elements are energized (PREHEAT OIL/AIR switch is in OIL position).
LED 1 - RUN	Local control panel *	Illuminates when engine run signal is sent to engine (START/RUN AND PRIME/OFF switch is in RUN position).
LED 2 - START	Local control panel *	Illuminates when engine is cranking (START/ RUN AND PRIME/OFF switch is in START position).
LED 3 - LOP	Local control panel *	Illuminates when engine oil pressure drops below acceptable limit.
LED 4 - HT	Local control panel *	Illuminates when engine temperature exceeds acceptable limit.
LED 5 - APU ON	Local control panel *	Illuminates when APU output contractor is engaged (closed).
LED 8 - HIGH ENGINE TEMPERATURE	Remote control panel	Illuminates when engine temperature exceeds acceptable limit.
LED 9 - LOW OIL PRESSURE	Remote control panel	Illuminates when engine oil pressure drops below acceptable limit.
LED 10 - APU ON	Remote control panel	Illuminates when APU output contractor is engaged (closed).
LED 11 - Battle Short ON	Remote control panel	Illuminates when APU is operating in battle short conditions (BATTLESHORT switch activated).
Test Point TP 1	Local control panel *	Ground / common test point.
Test Point TP 2	Local control panel *	28 VDC system test point.
Test Point TP 3	Local control panel *	Alternator AC signal.

* Local control panel LEDs and test points are located on the back of the control panel, under the top rear APU cover (see Figure 2-1). Turn latches and open cover to gain access.

Table 4-5. ENGINE WILL NOT CRANK (Sheet 1 of 4)

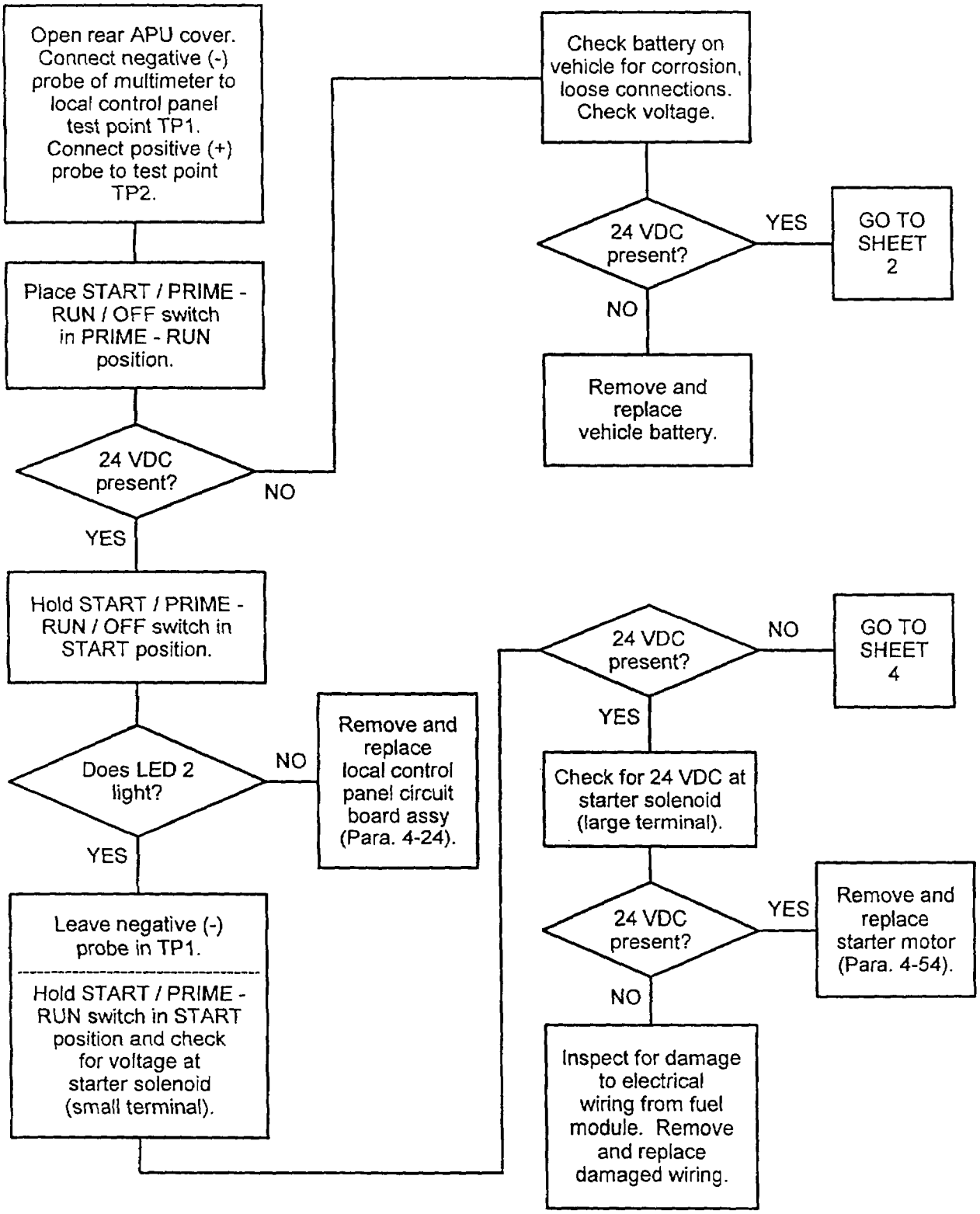

Table 4-5. ENGINE WILL NOT CRANK (Sheet 2 of 4)

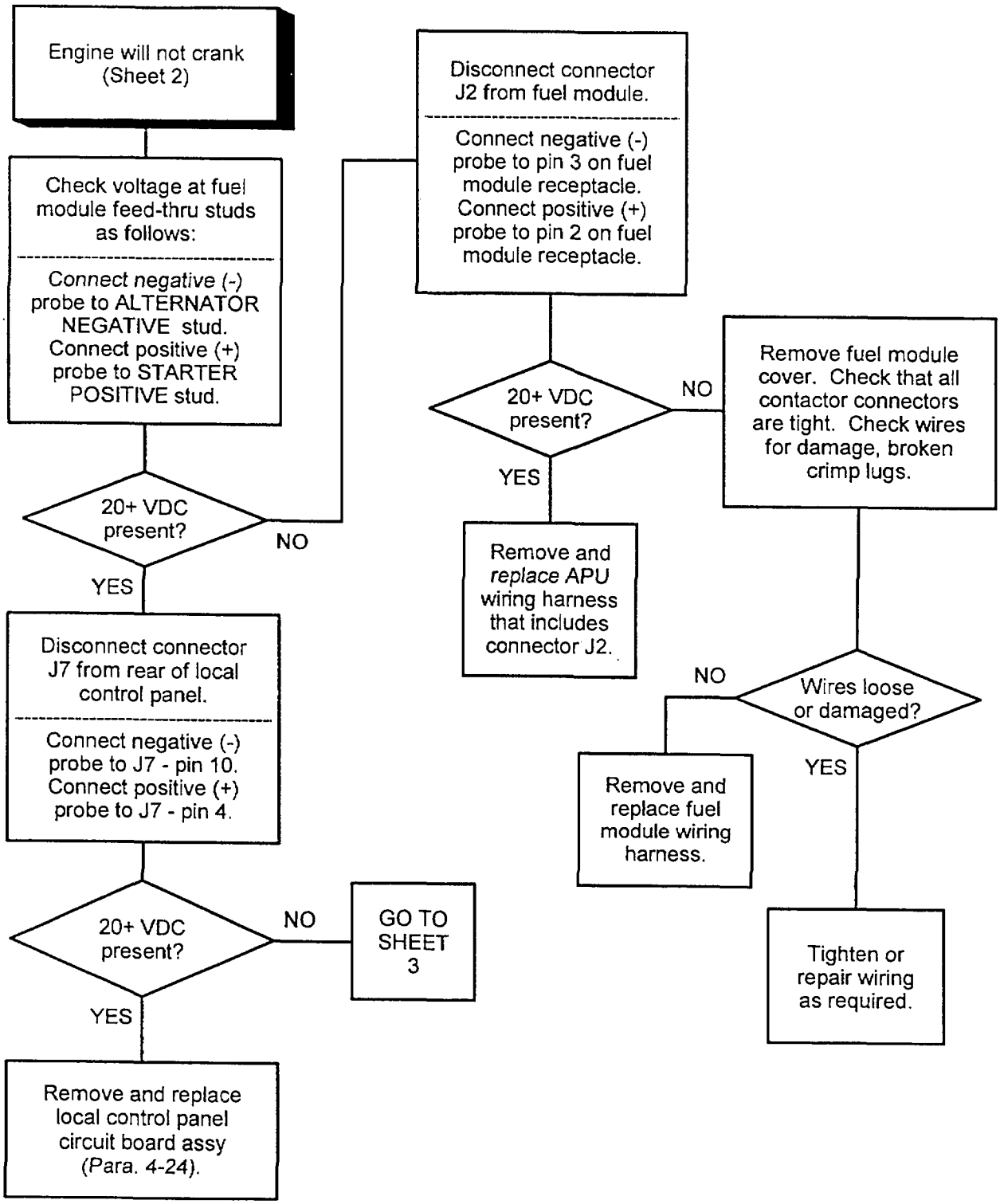

Table 4-5. ENGINE WILL NOT CRANK (Sheet 3 of 4)

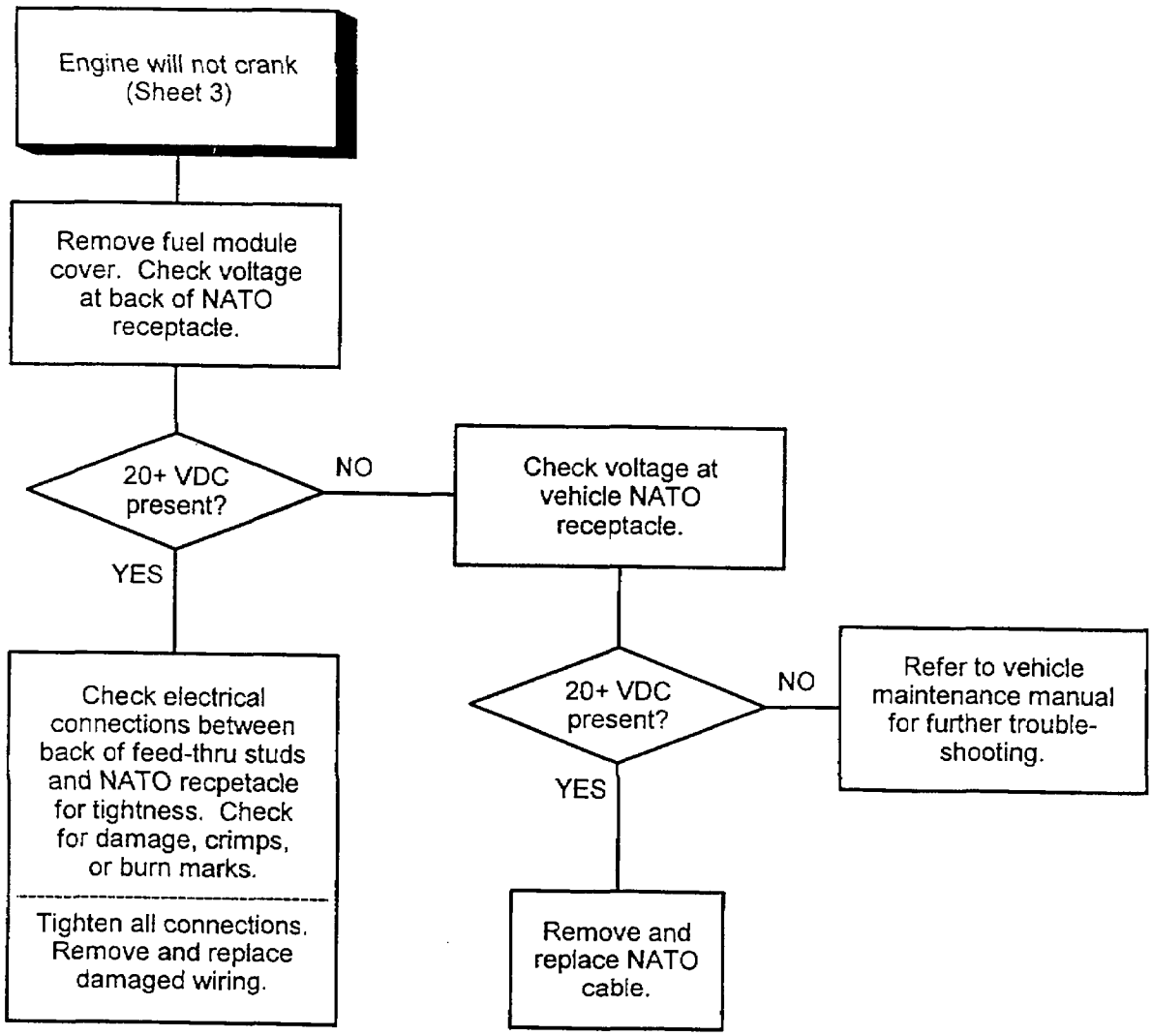

Table 4-5. ENGINE WILL NOT CRANK (Sheet 4 of 4)

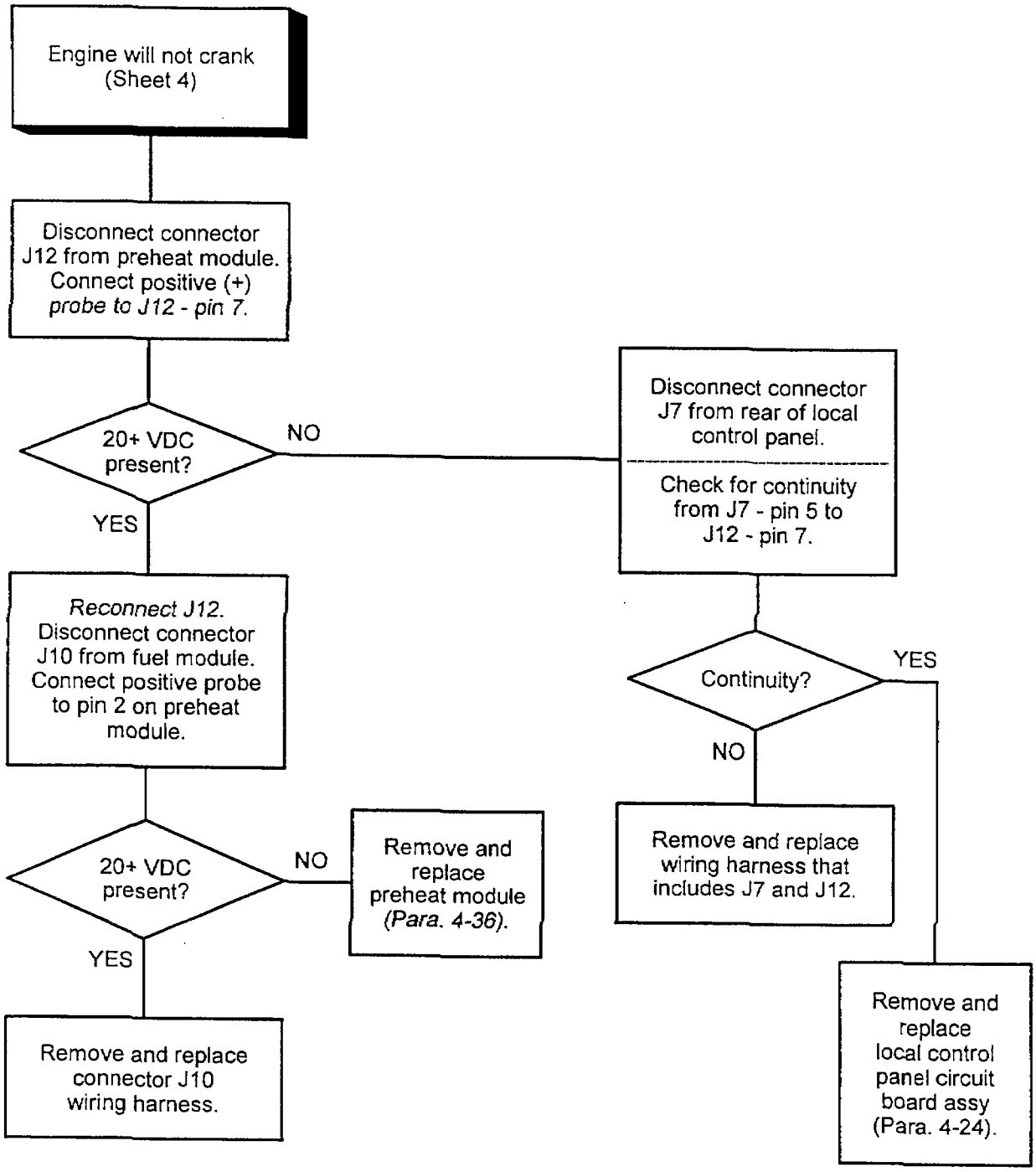

Table 4-6. ENGINE WILL NOT CRANK, CONTROL PANEL CIRCUIT BREAKER TRIPS CONTINUOUSLY

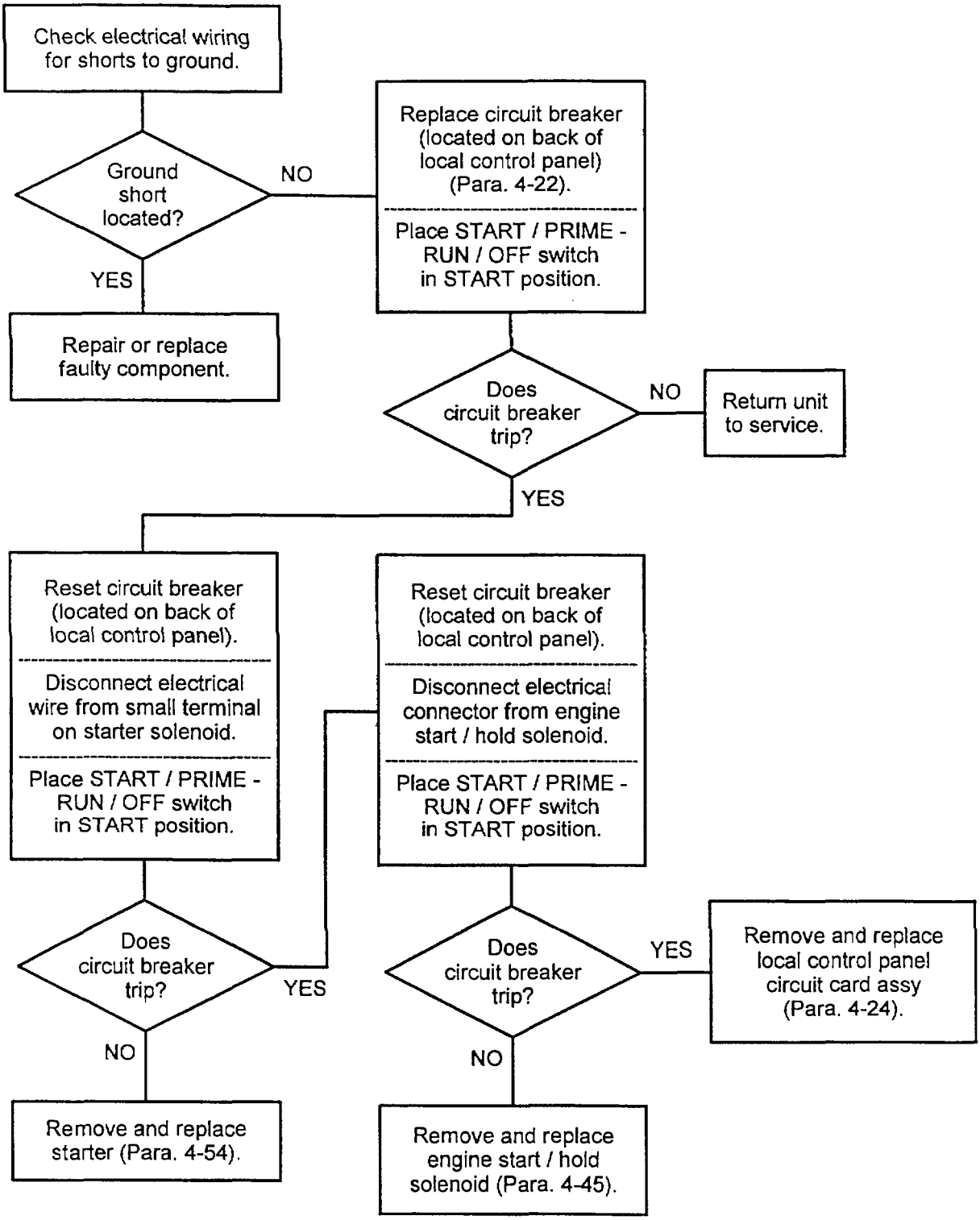

Table 4-7. ENGINE CRANKS BUT WILL NOT START

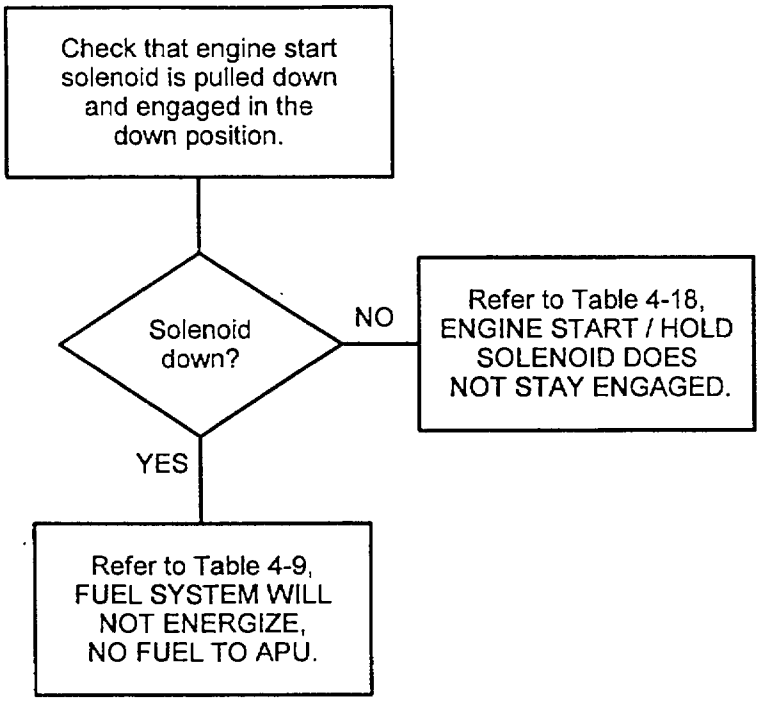

Table 4-8. ENGINE OPERATES, NO GENERATOR VOLTAGE OR BELOW RATED VOLTAGE (Sheet 1 of 3)

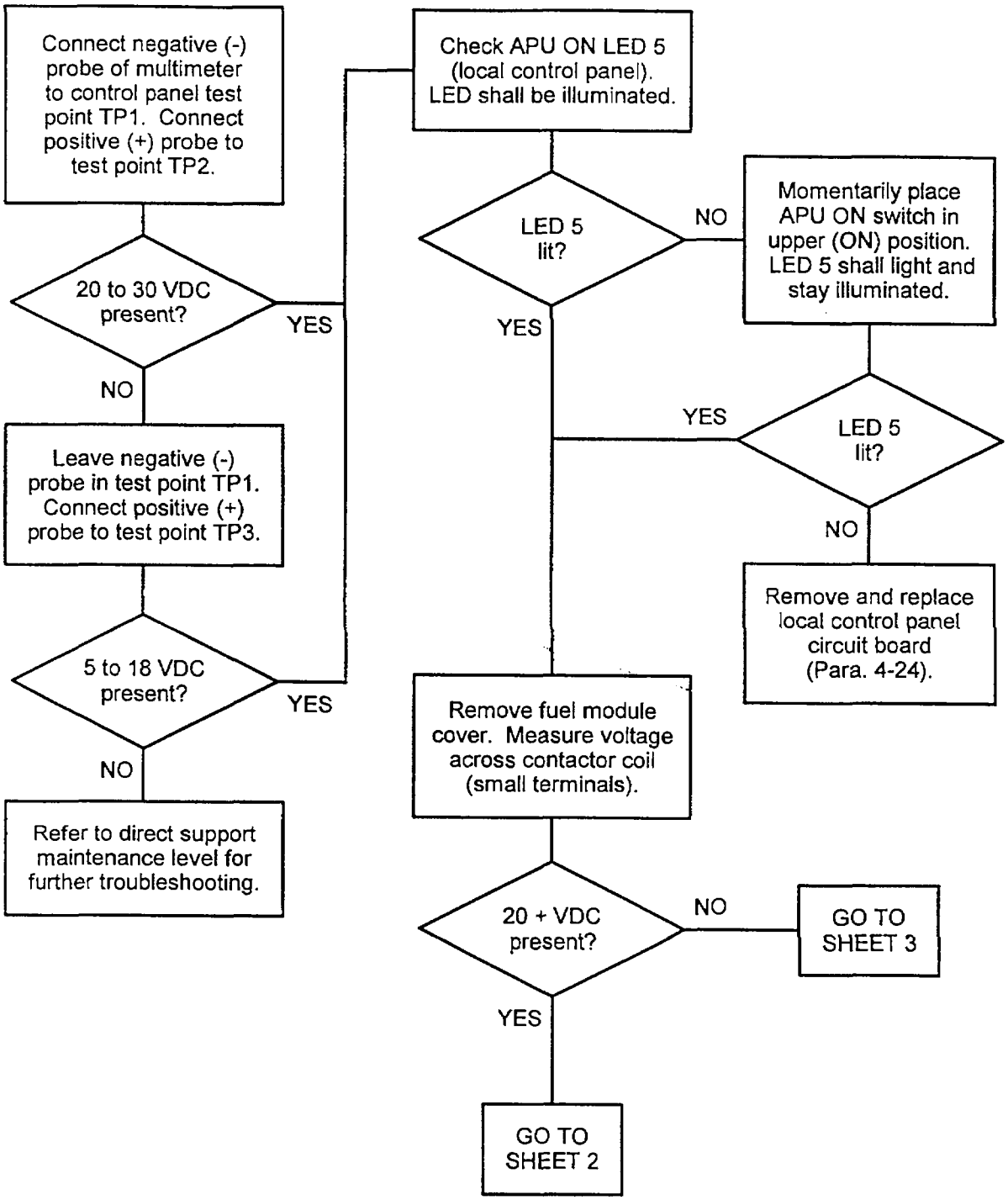

Table 4-8. ENGINE OPERATES, NO GENERATOR VOLTAGE OR BELOW RATED VOLTAGE (Sheet 2 of 3)

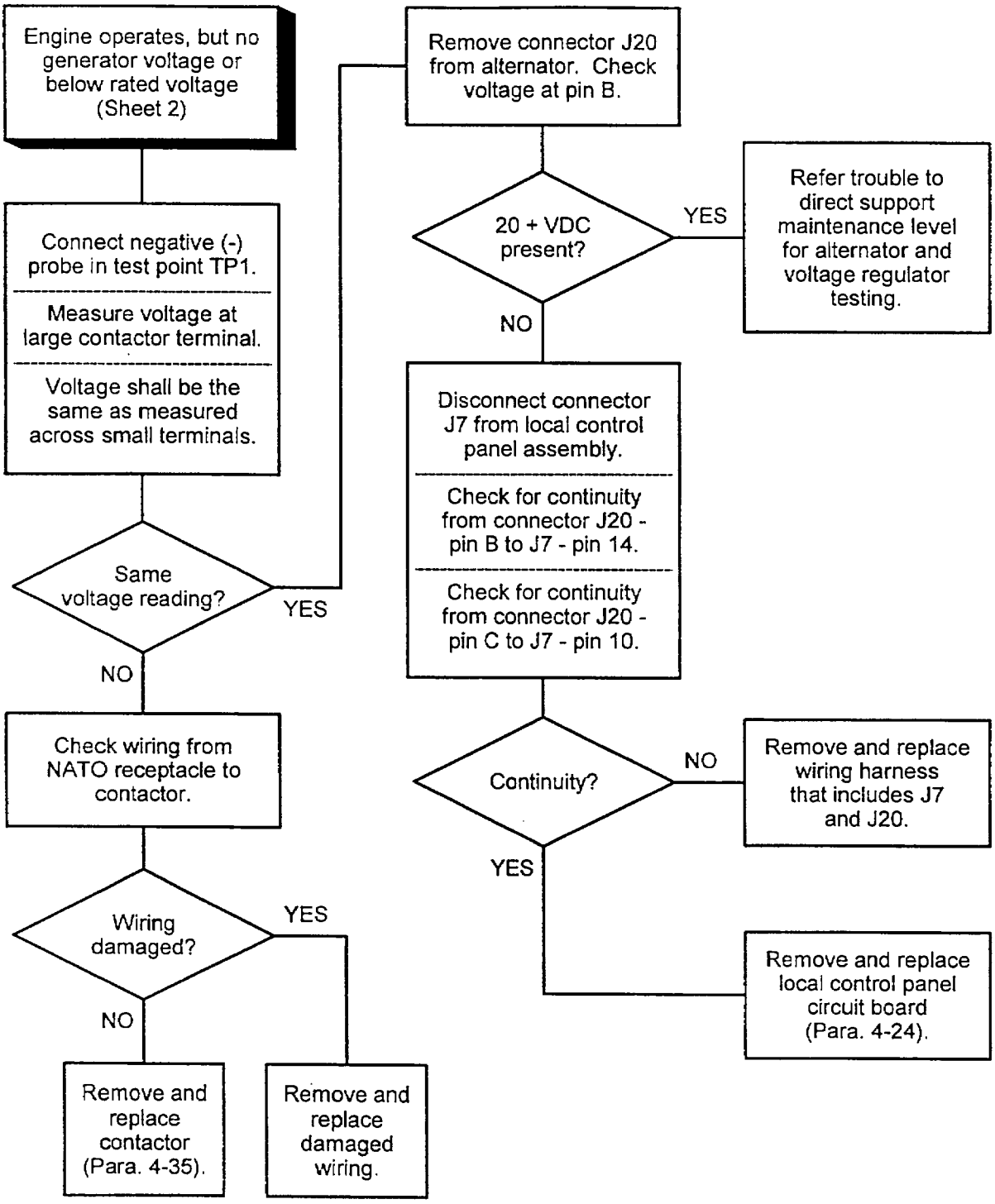

Table 4-8. ENGINE OPERATES, NO GENERATOR VOLTAGE OR BELOW RATED VOLTAGE (Sheet 3 of 3)

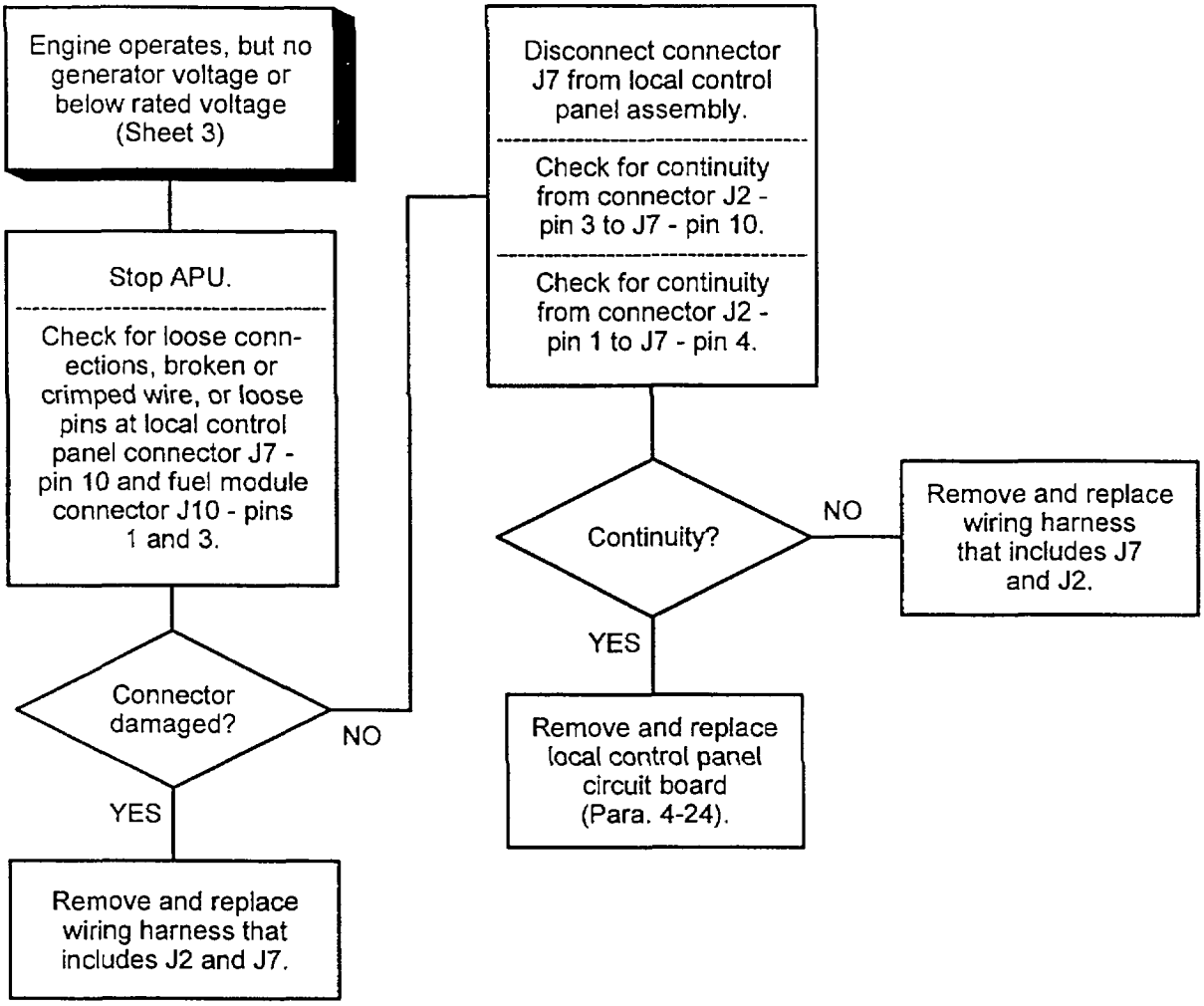

Table 4-9. FUEL SYSTEM WILL NOT ENERGIZE, NO FUEL TO APU (Sheet 1 of 2)

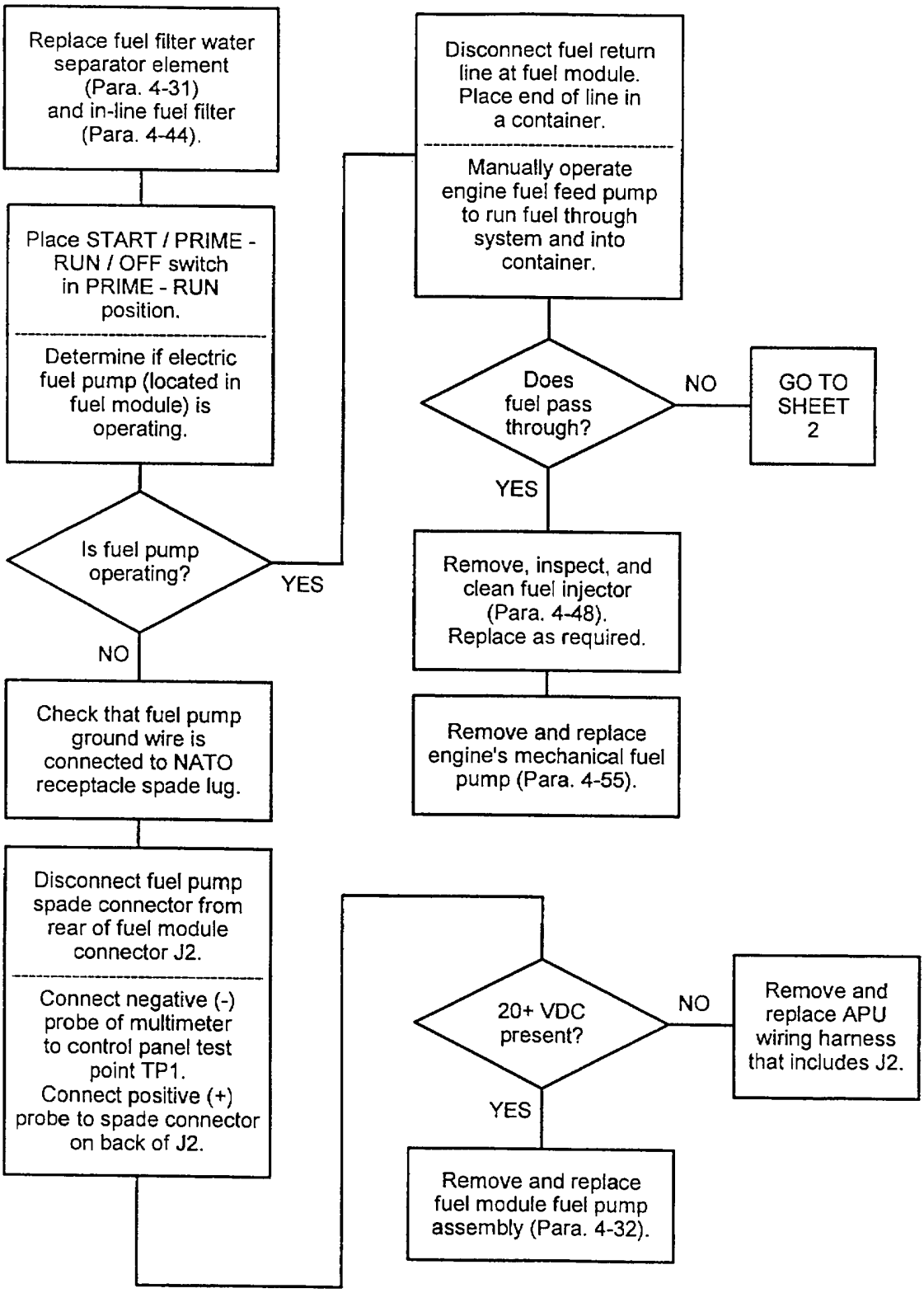

Table 4-9. FUEL SYSTEM WILL NOT ENERGIZE, NO FUEL TO APU (Sheet 2 of 2)

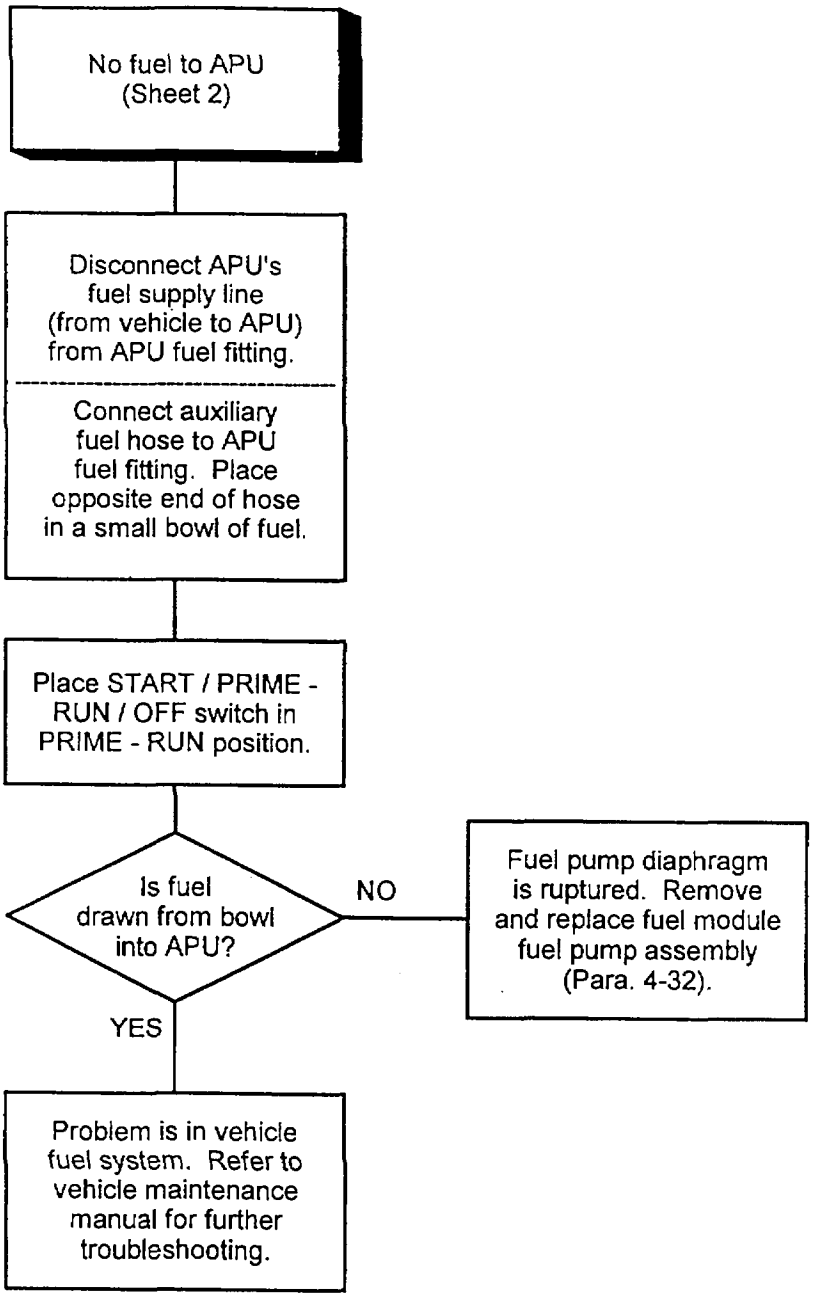

Table 4-10. ENGINE WILL NOT START IN COLD WEATHER

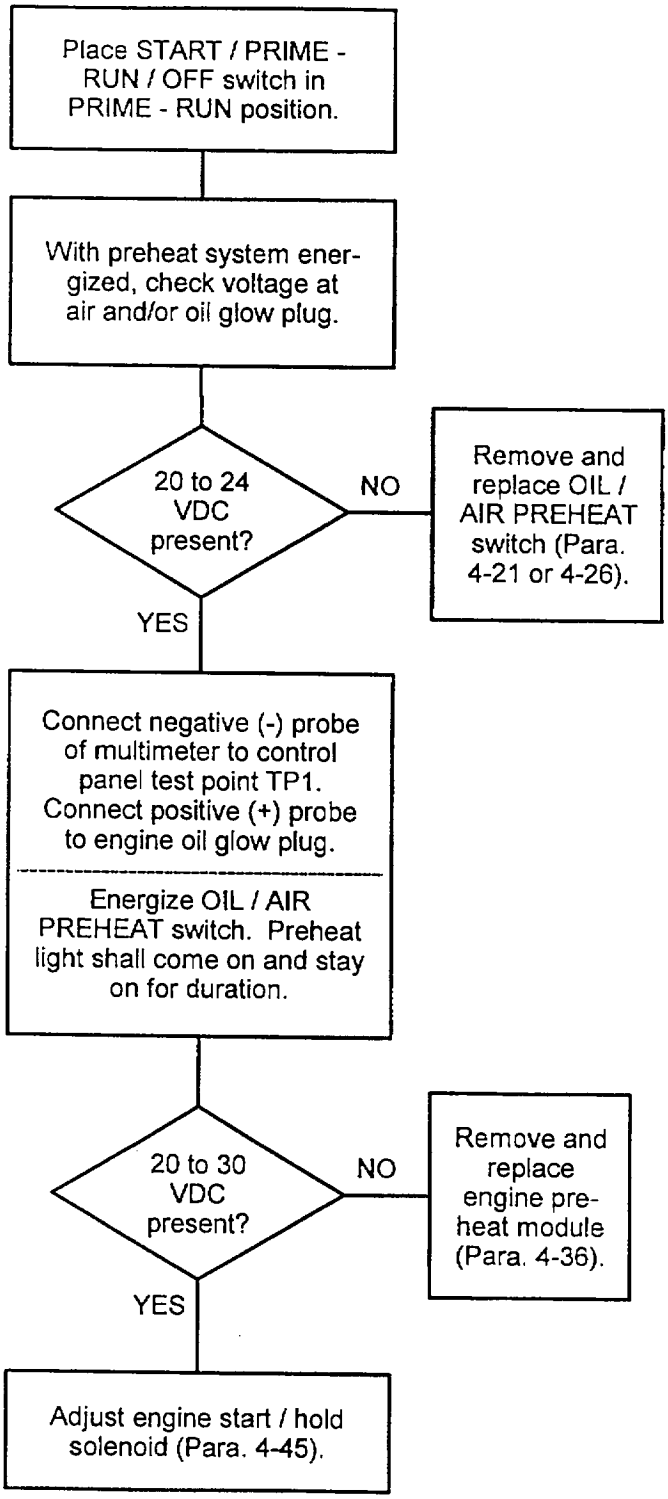

Table 4-11. ENGINE STARTS AND STOPS (Sheet 1 of 2)

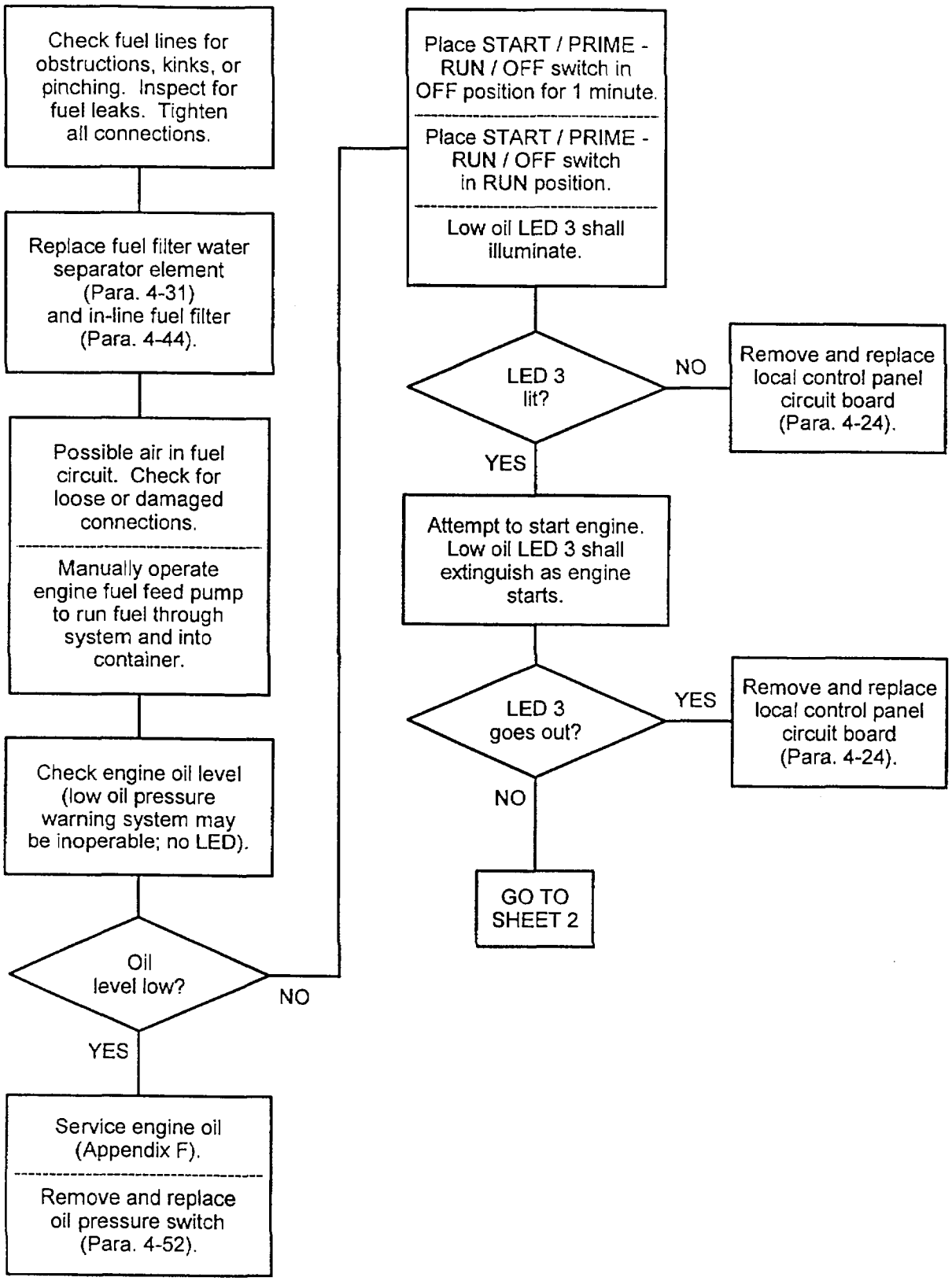

Table 4-11. ENGINE STARTS AND STOPS (Sheet 2 of 2)

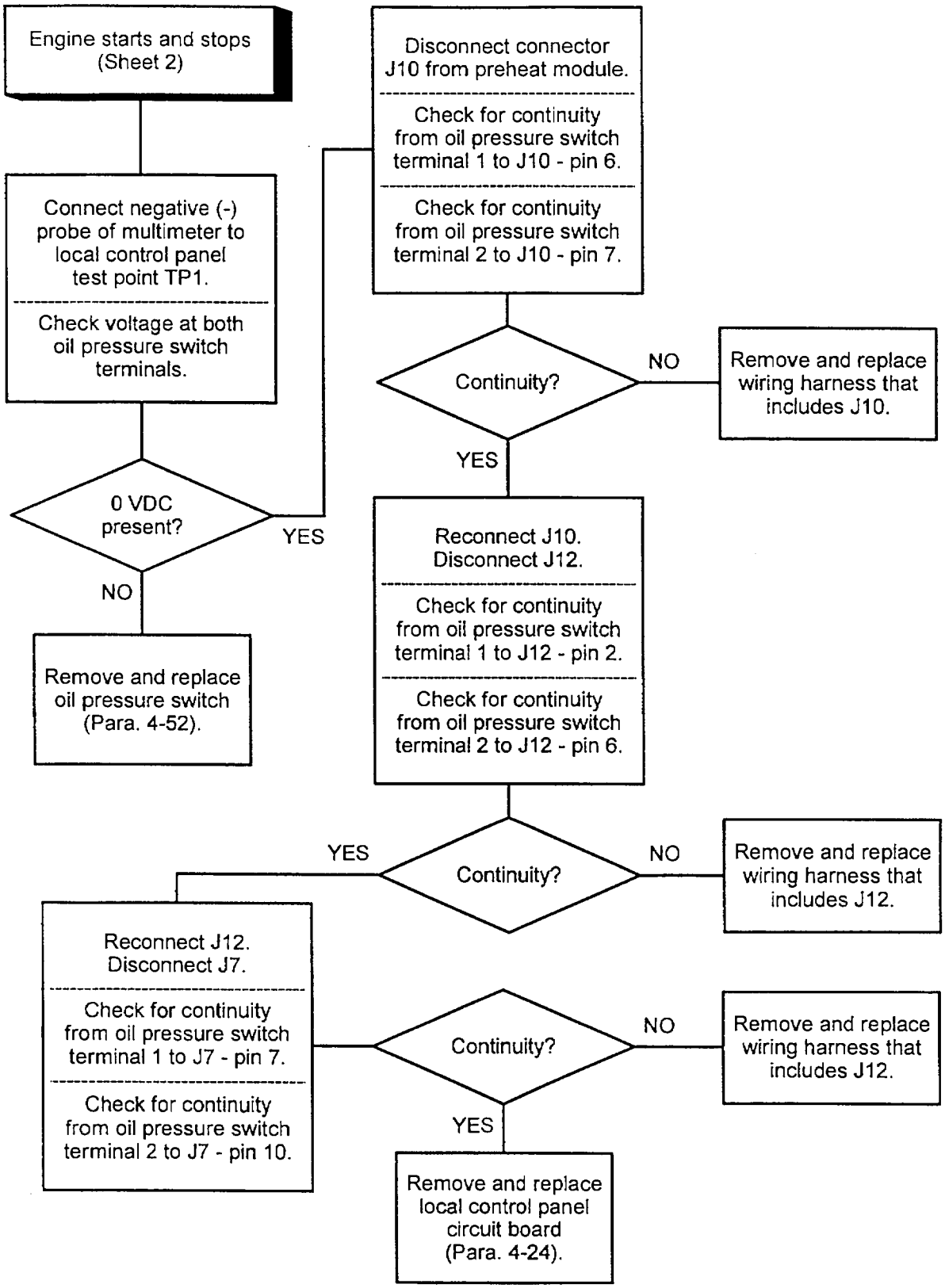

Table 4-12. ENGINE SPEED FLUCTUATES

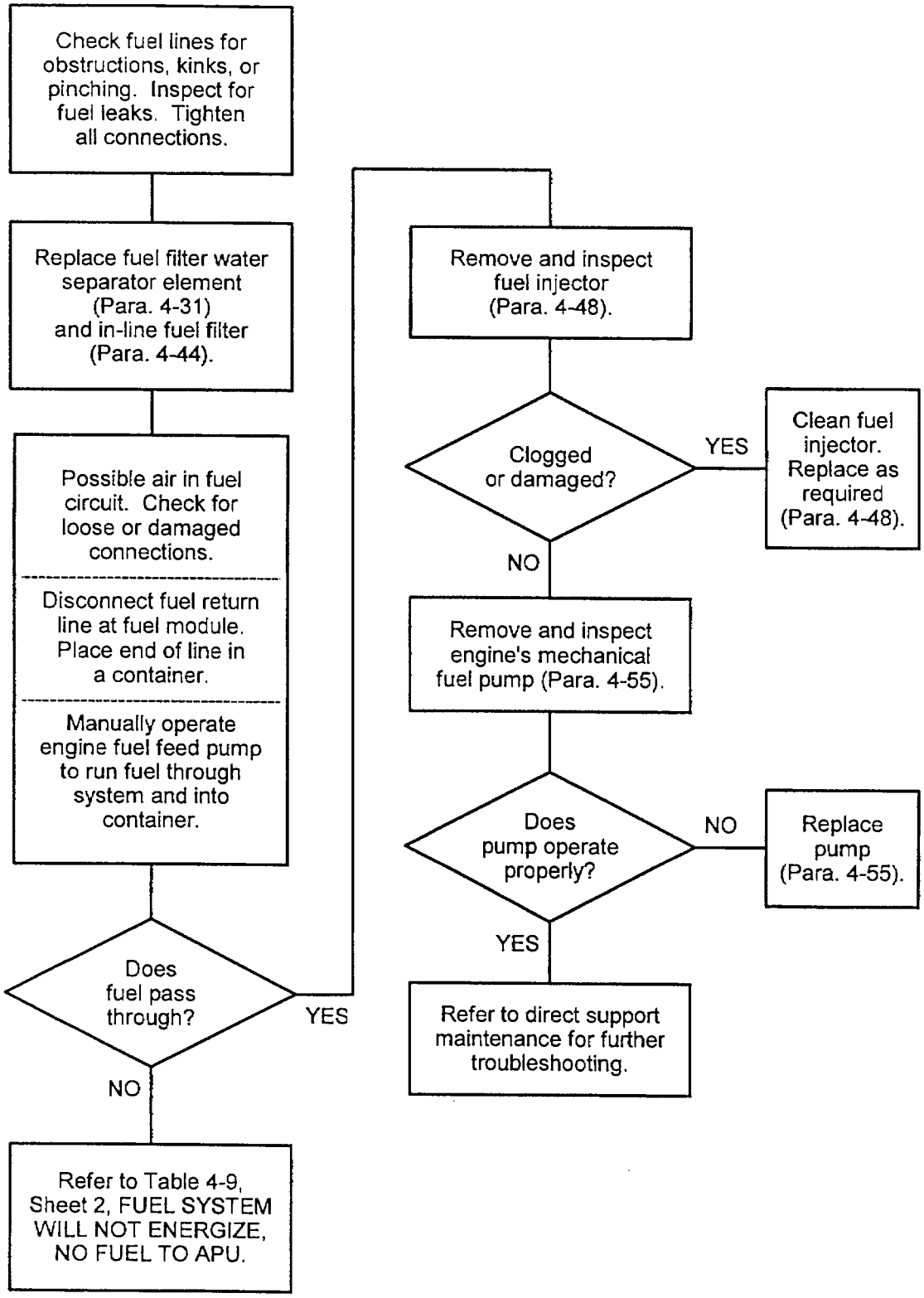

Table 4-13. ENGINE OVERHEATS (Sheet 1 of 2)

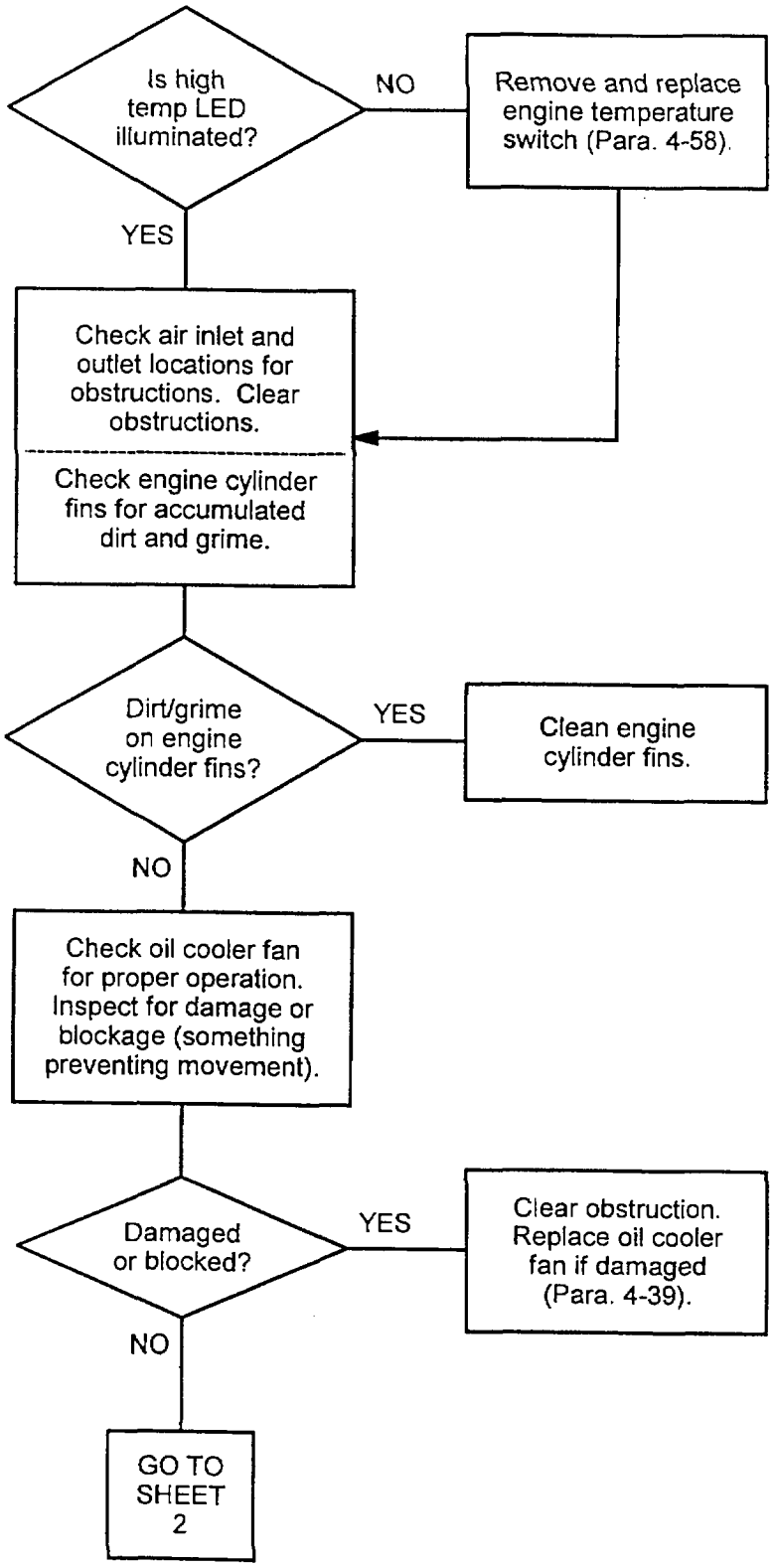

Table 4-13. ENGINE OVERHEATS (Sheet 2 of 2)

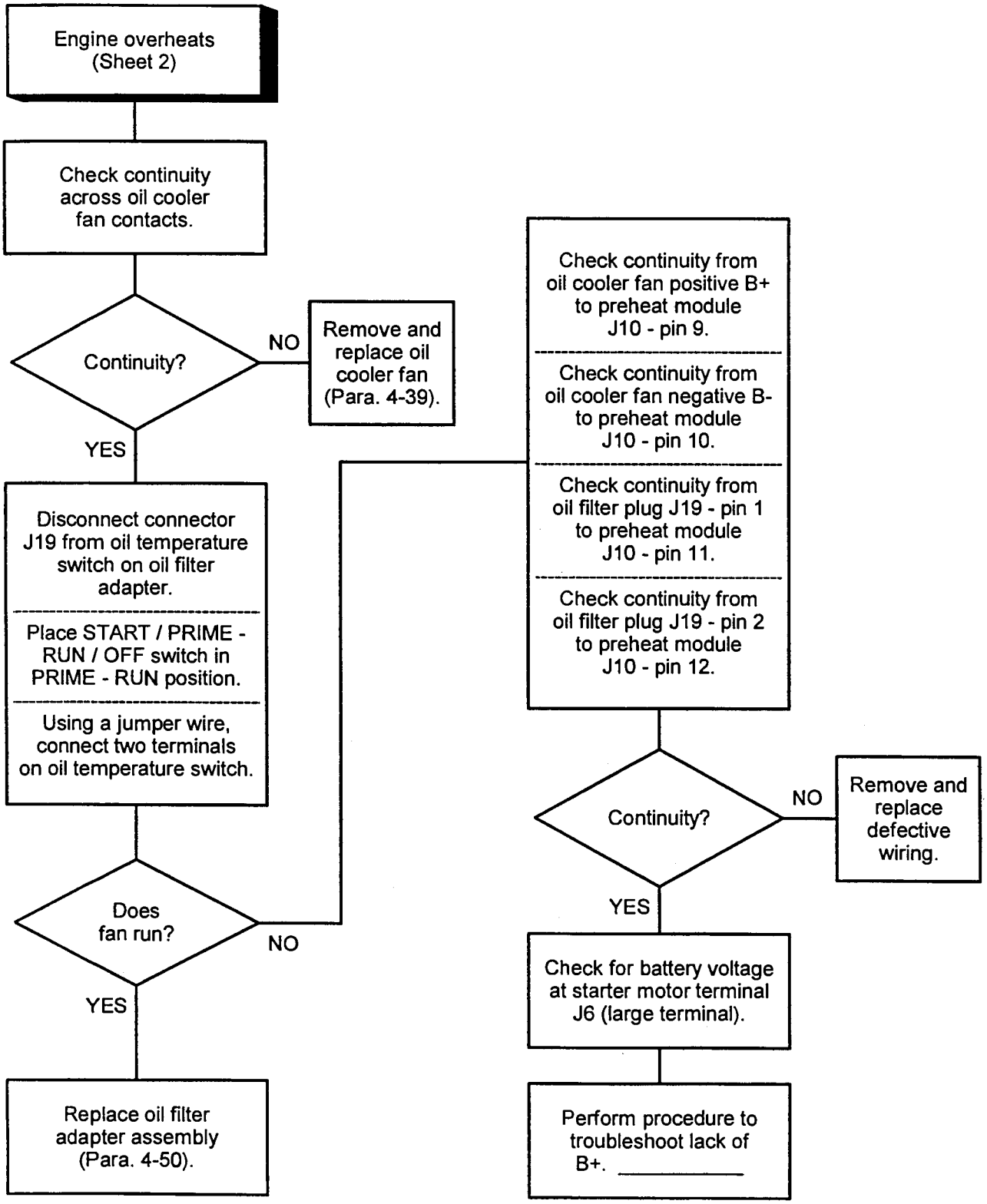

Table 4-14. ENGINE HAMMERS

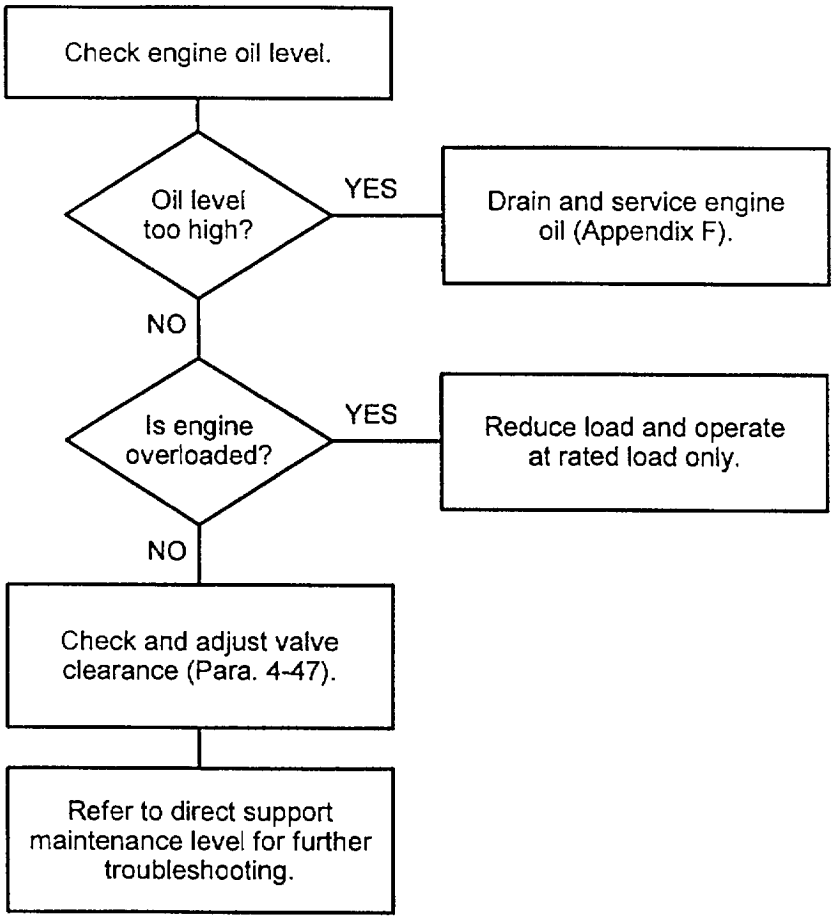

Table 4-15. ENGINE EMITS BLACK SMOKE

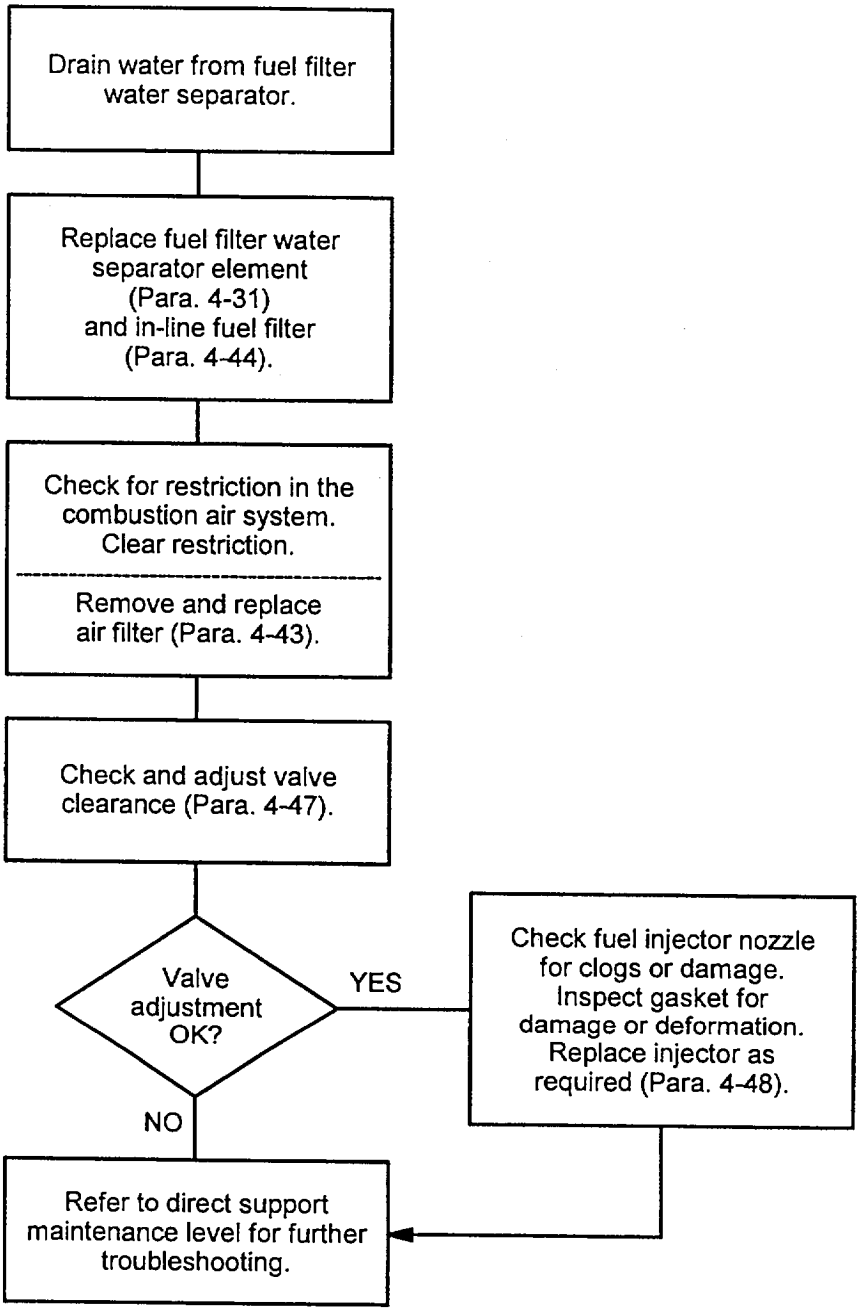

Table 4-16. ENGINE EMITS WHITE SMOKE

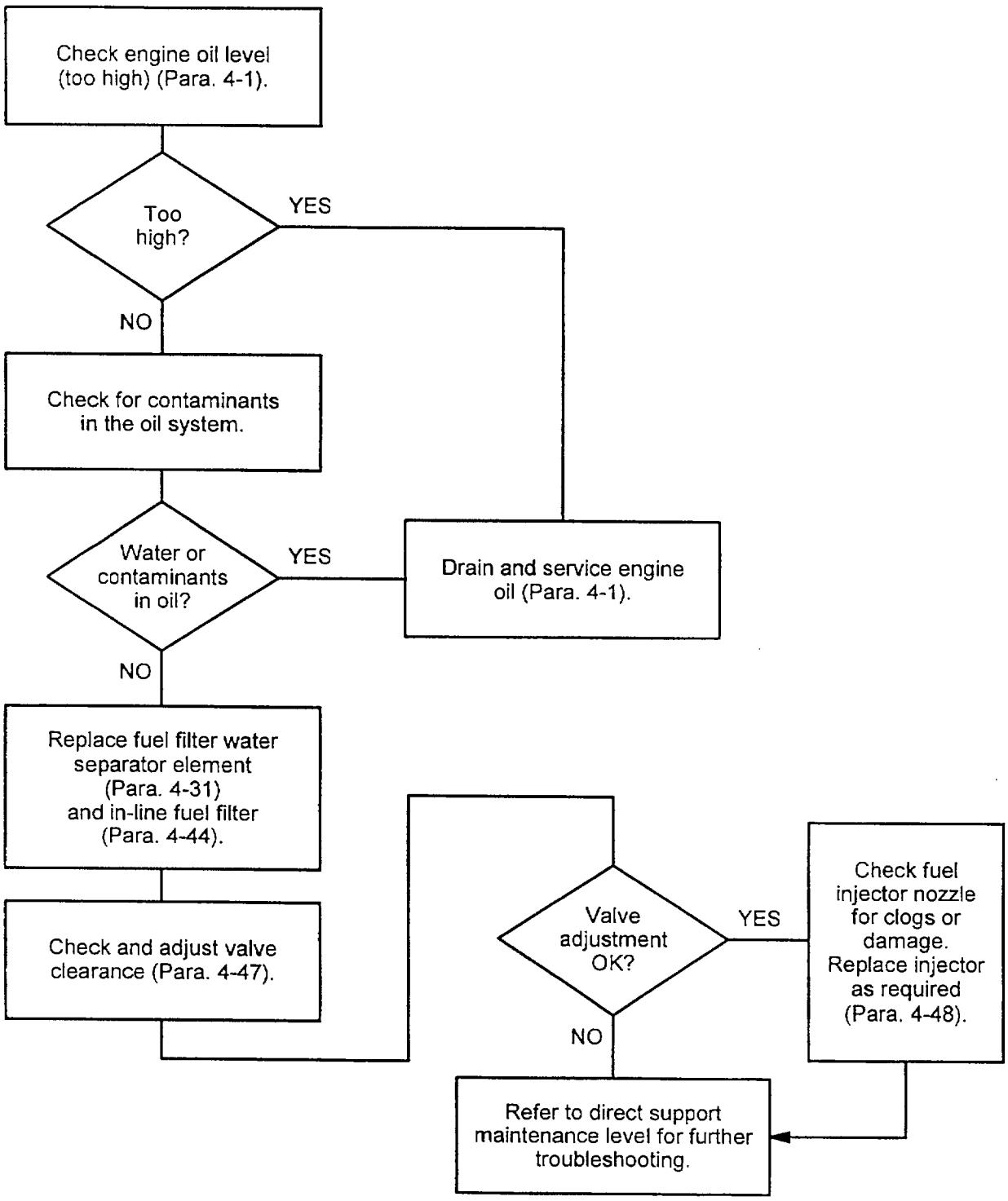

Table 4-17. APU SHUTDOWN, LOW OIL PRESSURE (Sheet 1 of 2)

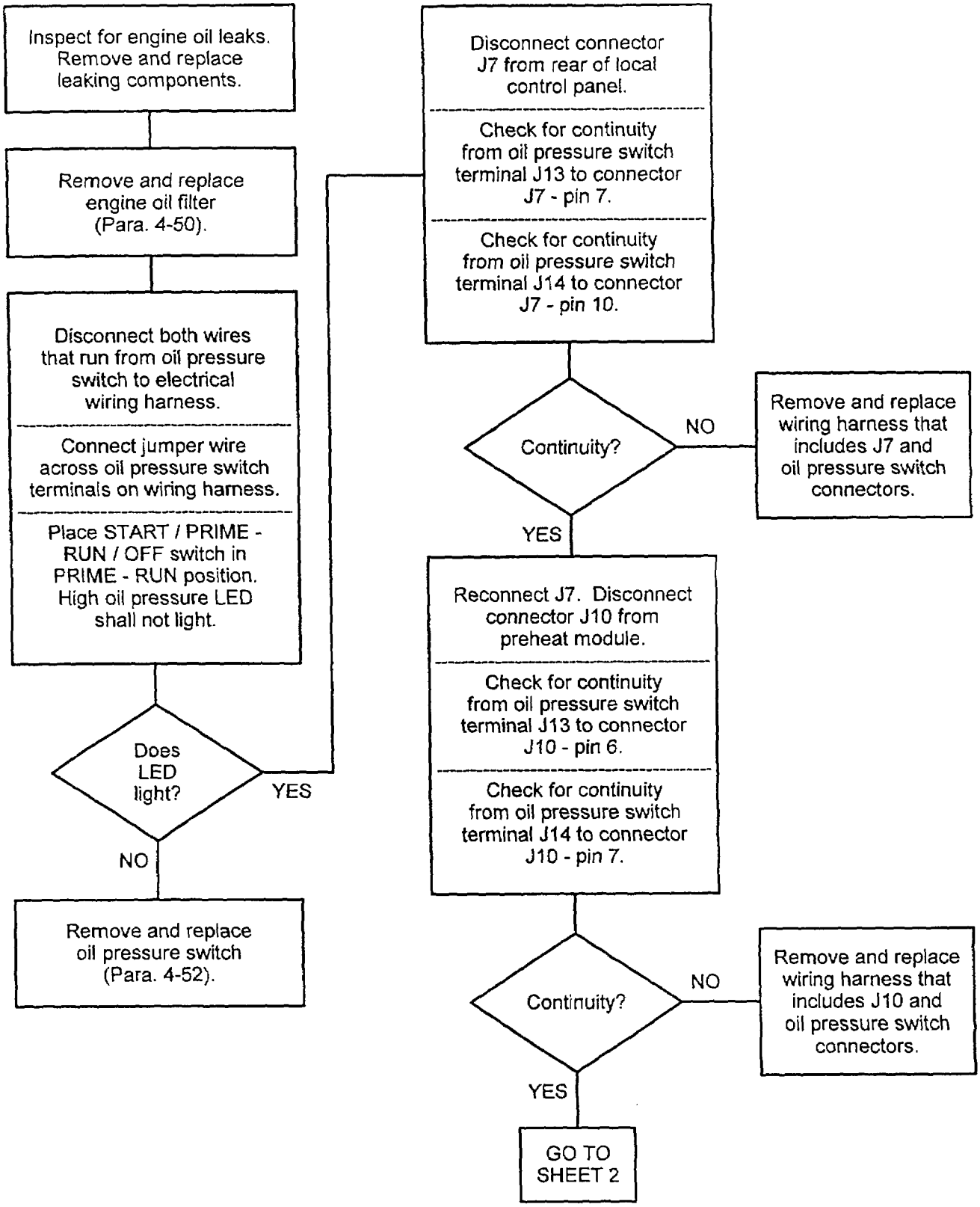

Table 4-17. APU SHUTDOWN, LOW OIL PRESSURE (Sheet 2 of 2)

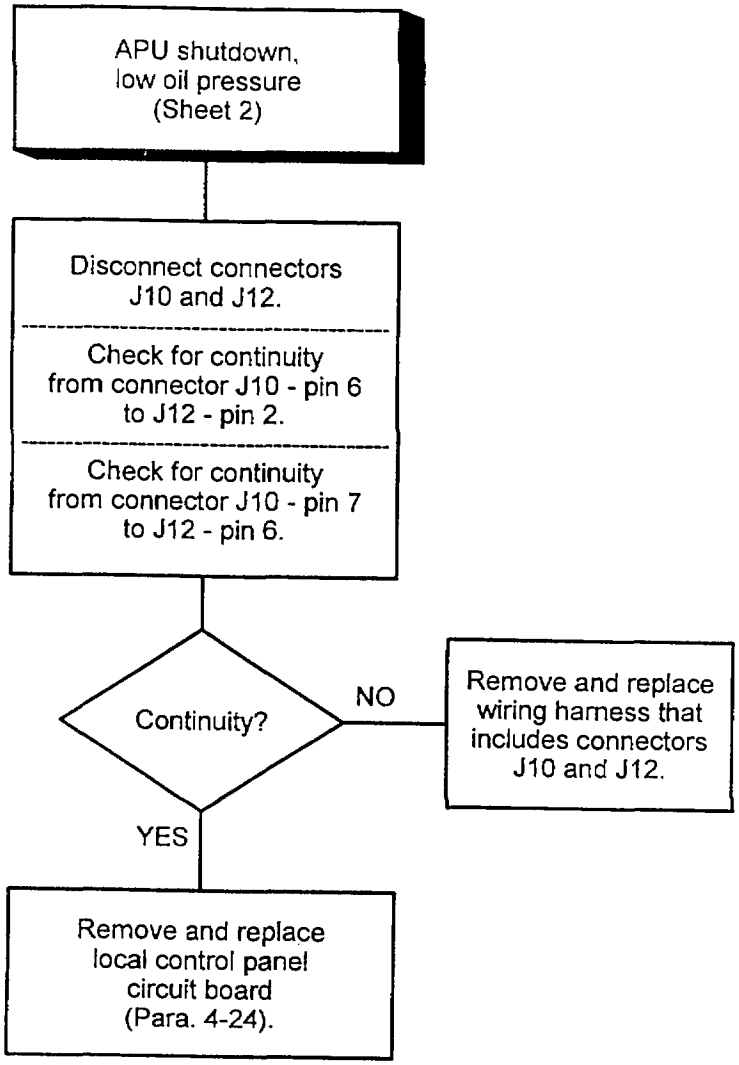

Table 4-18. ENGINE START / HOLD SOLENOID DOES NOT STAY ENGAGED (Sheet 1 of 2)

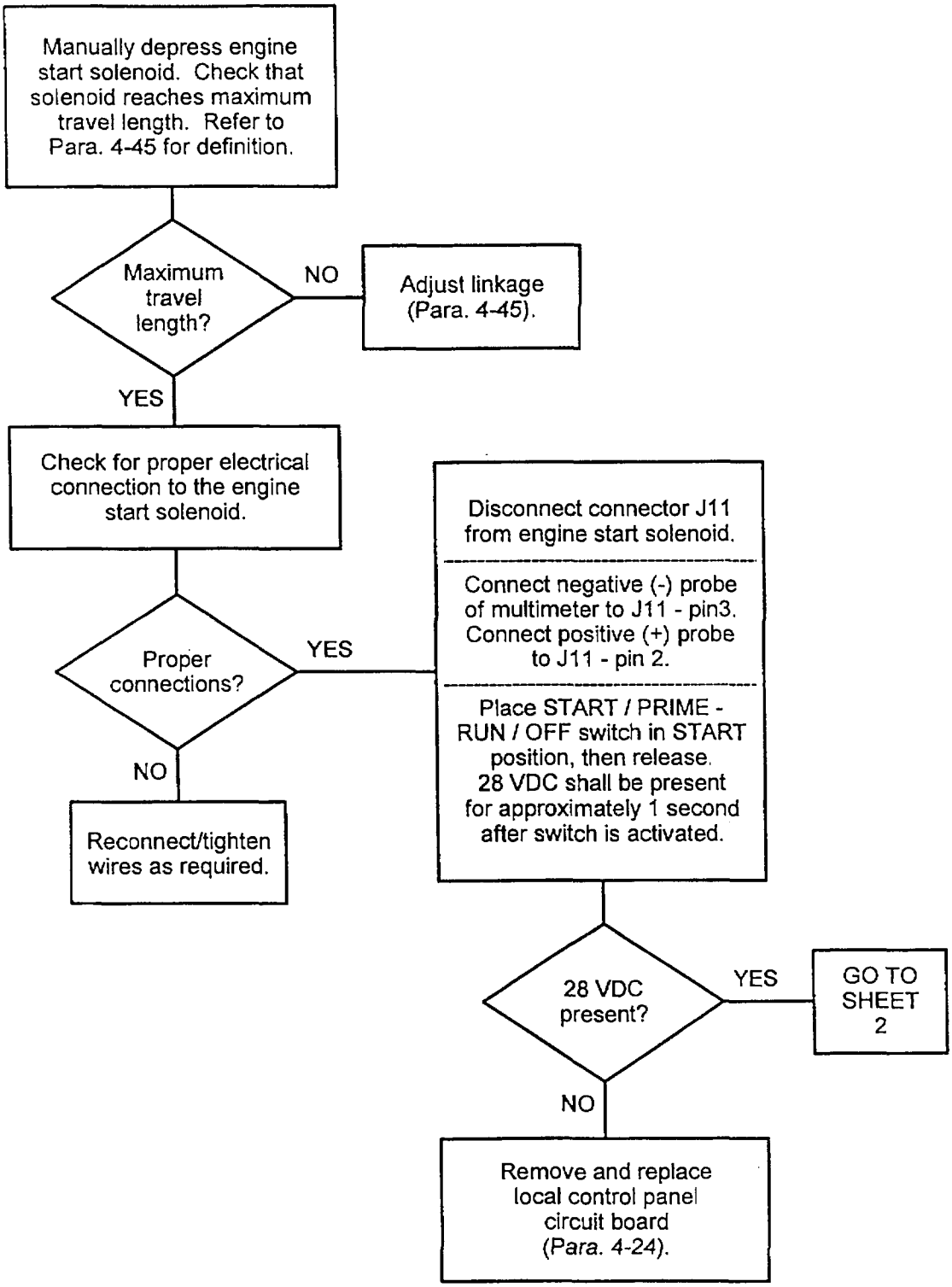

Table 4-18. ENGINE START / HOLD SOLENOID DOES NOT STAY ENGAGED (Sheet 2 of 2)

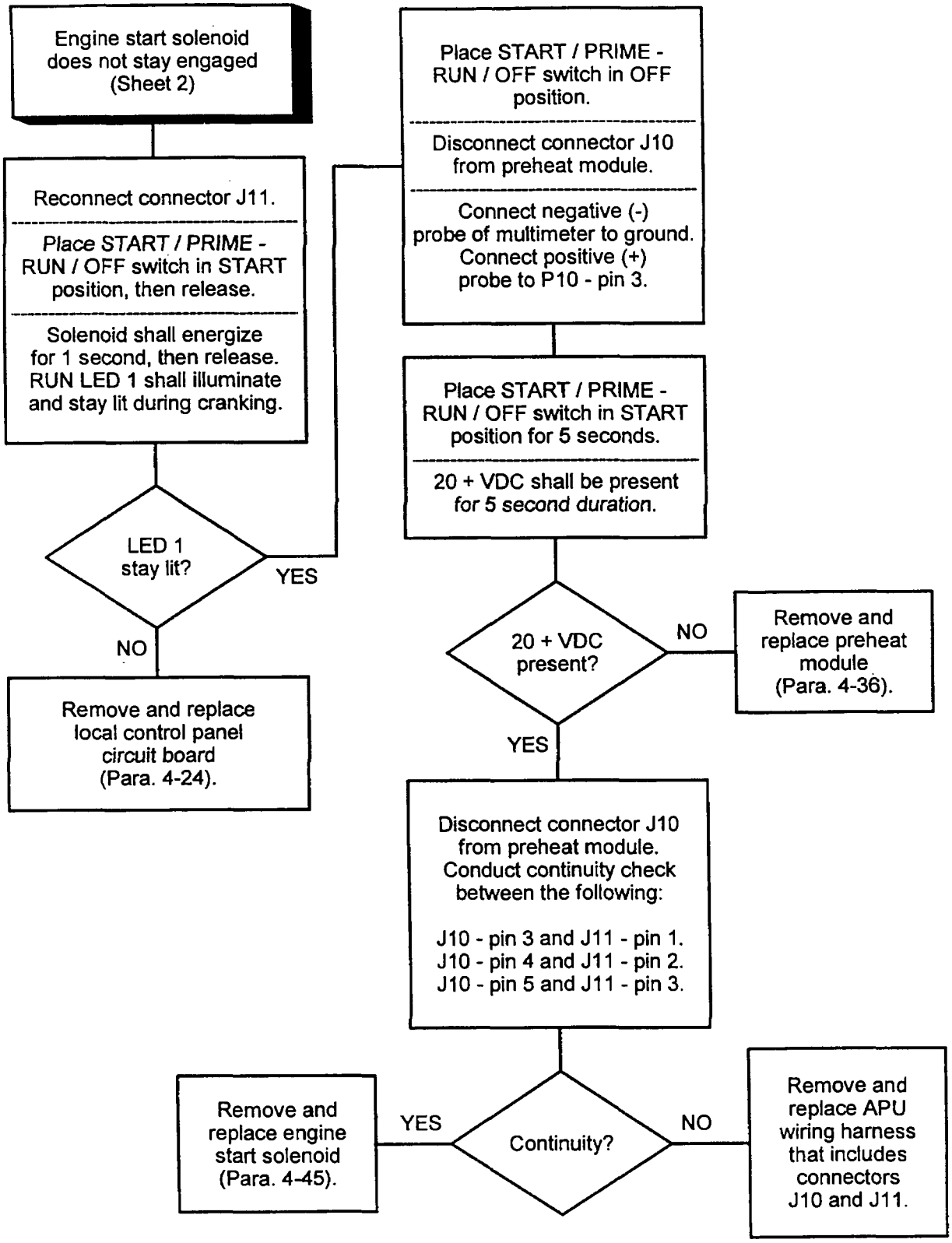

4-11. APU CASE ASSEMBLY (ENCLOSURE) REPAIR

This task covers inspection and repair.

INITIAL SETUP

Tools:
Shop Equipment, Automotive Maintenance and Repair (Item 1, App. B)

Equipment Condition:
APU Shut Down

Parts/Materials:
Paint (Item 6, App. E)

A. INSPECTION.

1. Inspect enclosure components for dents, cracks, warping, or other damage. Check all covers, doors, ducts, and panels.

2. Inspect painted surfaces for chips, scratches, bare metal, roughness, or corrosion.

3. Inspect top cover and side door latches for proper operation. Latches should operate smoothly, without binding. Inspect top cover, side doors, and ducts for security of attachment. If a component is loose, tighten attaching parts as required.

4. Open top covers and side doors and inspect insulation material for damage. Ensure material is securely attached to component. Inspect APU hoist ring and tie-down rings for security of attachment.

B. REPAIR.

WARNING

CARC paint dust is a health hazard. Wear protective eyewear, mask, and gloves when sanding CARC painted surfaces. Failure to comply can cause personal injury.

1. Repair painted surfaces of enclosure by removing loose or chipped paint. Sand surfaces until smooth and remove all evidence of corrosion. Mask unpainted surfaces before painting. Paint APU using green paint (per FED-STD-595).

2. Repair stencils as required by touching up with available paint. Refer to Figure 2-3 for stencil location and verbiage.

3. Repair of parts, other than painting, is limited to removal and replacement of damaged components. Refer to applicable paragraphs for instructions.

4-12. COVER ASSEMBLY MAINTENANCE

This task covers removal, disassembly, inspection, repair, assembly, and installation

INITIAL SETUP

Tools:
Shop Equipment, Automotive Maintenance and Repair (Item 1, App. B)

Personnel Required:
2 Maintenance Personnel

Parts/Materials:
Adhesive, Loctite (Item 1, App. E)
Adhesive, Silicon (Item 2, App. E)
Adhesive, Contact Spray On (Item 12, App. E)
Tape, VHB (Item 8, App. E)

Equipment Condition:
Control Panel Removed (Para. 4-20)

A. REMOVAL.

1. Lift and turn four latches (1, Figure 4-2) to unlock covers (2, 3).

NOTE

Discard and replace all lockwashers and locknuts when removed.

2. Remove four screws (4), eight washers (5), and four locknuts (6) that secure cross member (7) to support brackets (8, 9).

WARNING

Cover assembly is heavy and awkward. Enlist help of an assistant when removing.

3. With the help of an assistant, lift cover assembly up and off APU enclosure.

4. Remove mounting bracket (8) from enclosure by removing four screws (10), eight washers (11), and four locknuts (12).

5. Remove mounting bracket (9) from enclosure by removing four screws (13), eight washers (14), and four locknuts (15).

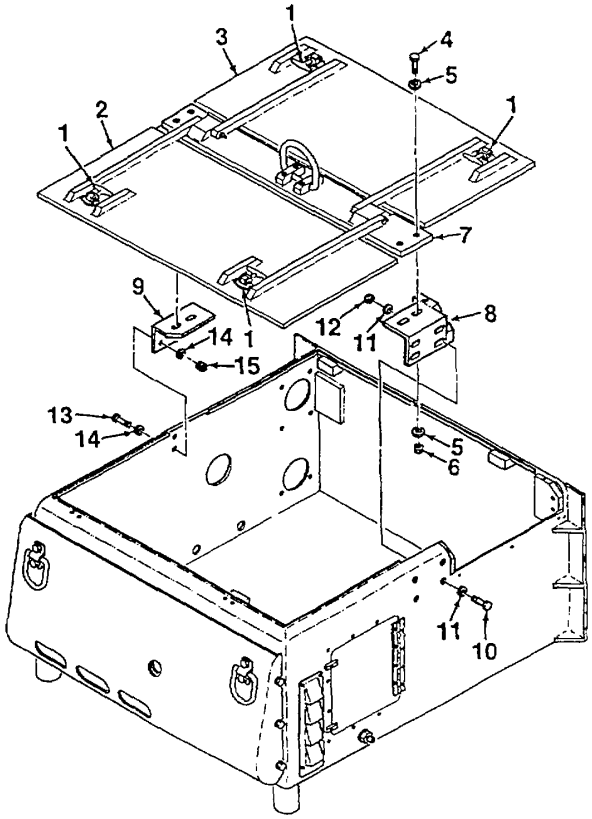

Figure 4-2. Cover Assembly (Sheet 1 of 4)

4-12. COVER ASSEMBLY MAINTENANCE

6. Remove control panel mounting block from mounting bracket (8) only if replacement is required.

B. DISASSEMBLY.

1. Remove pawl (16, Figure 4-2) from latch shaft by removing setscrew (17). Remove latch (18) and block (19) from cover by removing screws (20). Remove gasket (21). Remove setscrews (22) from block (19) as required.

2. Remove cover (2) from cross member (7) by removing two screws (23), eight washers (24), and two locknuts (25).

3. Remove insulation (26) from cross member (7) by removing caps (28) from studs (27). Discard caps.

4. Remove hinge blocks (29) from cross member by removing screws (30), lockwashers (31), and washers (32).

5. Remove insulation (35, typical) from underside of rear cover by removing four caps (33) from studs (34). Discard caps.

6. Remove insulation (35) and diagram tray from underside of front cover by removing eight caps (33) from studs (34).

7. Remove hinge bars (38) from covers by removing three screws (39). Remove latch protector blocks (36) from covers by removing two screws (37).

C. INSPECTION.

1. Inspect components for dents, cracks, warping, or other damage.

2. Inspect painted surfaces for chips, scratches, bare metal, roughness, or corrosion.

3. Inspect latches for proper operation. Latches should operate smoothly, free of binding.

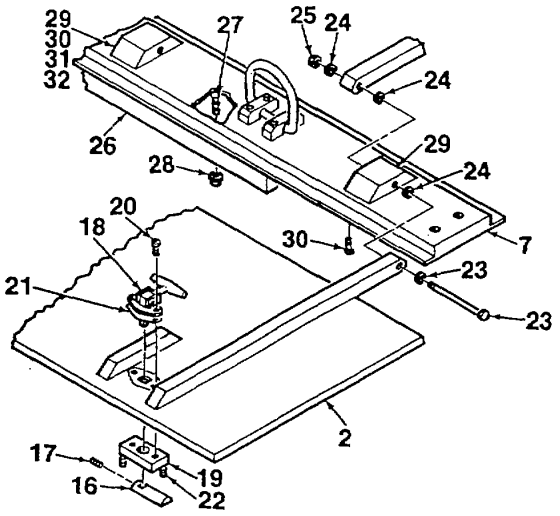

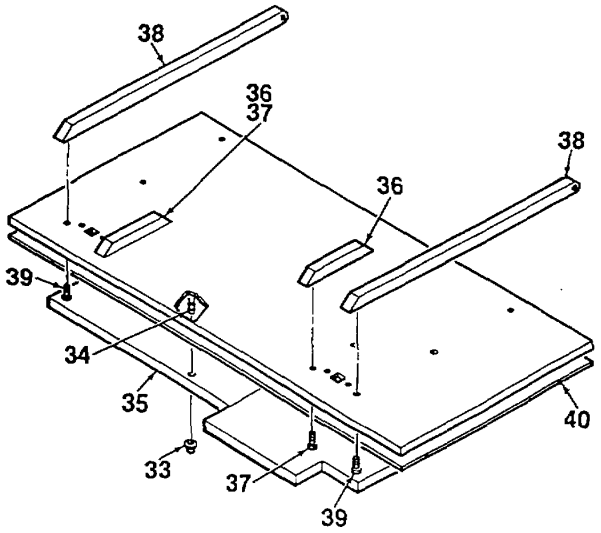

Figure 4-2. Cover Assembly (Sheet 2 of 4)

4-12. COVER ASSEMBLY MAINTENANCE

4. Inspect rubber gasket (40) for cuts, permanent set, deterioration, or other damage. Check security of attachment.

D. REPAIR.

1. Repair painted and stenciled surfaces in accordance with Para. 4-11.

2. Remove and replace damaged gasket (40) as required. Cut bulk gasket to length and secure using silicon adhesive.

3. Repair of parts, other than painting, is limited to removal and replacement of damaged components.

E. ASSEMBLY.

1. Apply loctite adhesive to the threads of screws (37, 39, Figure 4-2). Install hinge bars (38) onto covers using three screws (39). Install protector blocks (36) using two screws (37).

2. Apply VHB tape to flanges of diagram tray and install onto front cover.

3. Spray contact adhesive onto back of insulation (35, typical). Secure material to underside of covers by pressing new caps (33) onto studs (34).

4. Install hinge blocks (29) to cross member (7) using screws (30), lockwashers (31), and washers (32).

5. Spray contact adhesive onto back of insulation (26). Secure insulation to cross member by pressing new caps (28) onto studs (27).

6. Attach assembled covers to cross member (7) using two screws (23), eight washers (24), and two nuts (25).

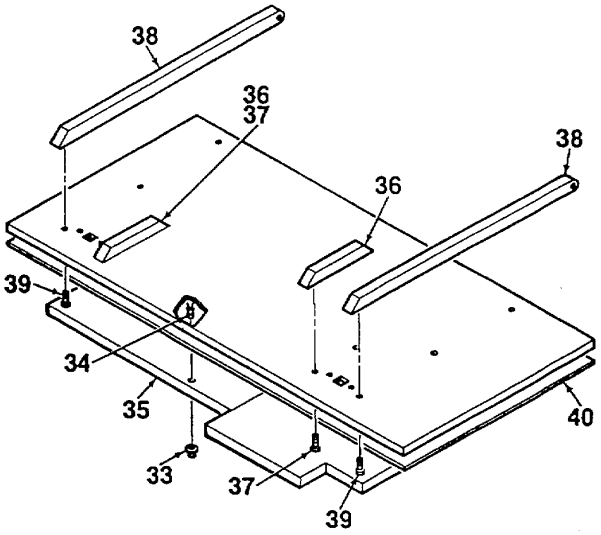

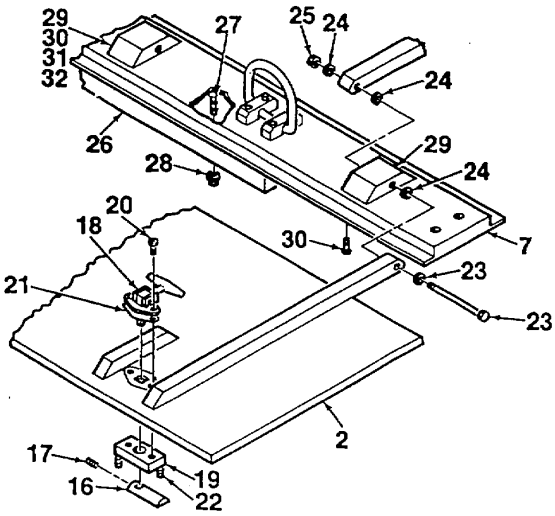

Figure 4-2. Cover Assembly (Sheet 3 of 4)

4-12. COVER ASSEMBLY MAINTENANCE

7. Install latches (18), gaskets (21), and mounting blocks (19) onto covers using screws (20). Secure pawls (16) to latch shafts using setscrews (17). Install setscrews (22).

F. INSTALLATION.

1. If removed, install control panel mounting block onto mounting bracket (8, Figure 4-2).

2. Install mounting bracket (9) onto enclosure using four screws (13), eight washers (14), and four locknuts (15).

3. Install mounting bracket (8) onto enclosure using four screws (10), eight washers (11), and four locknuts (12).

WARNING

Cover assembly is heavy and awkward. Enlist help of an assistant when installing.

4. With the help of an aide, carefully lift cover assembly and place on top of enclosure. Mate cross member mounting holes with holes in brackets.

5. Secure cross member (7) to brackets (8, 9) using four screws (4), eight washers (5), and four locknuts (6).

6. Install control panel assembly (Para. 4-20).

7. Lower covers (2, 3) and lock in place using latches (1).

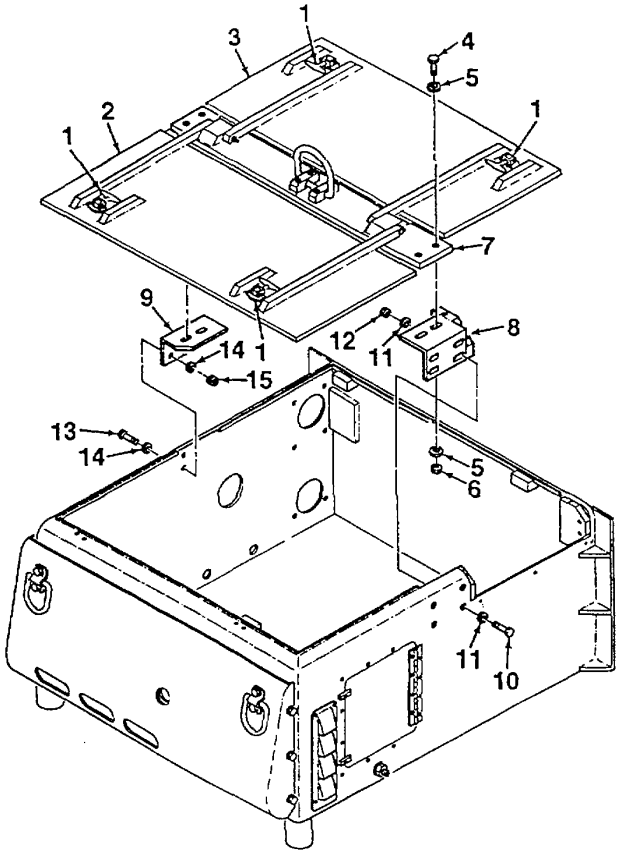

Figure 4-2. Cover Assembly (Sheet 4 of 4)

4-13. OIL FILTER ACCESS DOOR MAINTENANCE

This task covers removal, inspection, repair, and installation

INITIAL SETUP

Tools:
Shop Equipment, Automotive Maintenance and Repair (Item 1, App. B)

Equipment Condition:
APU Shut Down
NATO Plug Disconnected

Parts/Materials:
Adhesive, Loctite (Item 1, App. E)

A. REMOVAL.

1. Open oil filter access door (2, Figure 4-3) by turning door latches (1).

NOTE

Discard and replace all lockwashers and locknuts when removed.

2. Remove four screws (3), eight washers (4), and four locknuts (5) that secure door hinge (6) to APU enclosure.

3. Remove two latches (1) from APU enclosure by removing screws (7), washers (8), and locknuts (9). Remove detent plungers (10) by unscrewing from enclosure.

B. INSPECTION.

1. Inspect door for dents, cracks, warping, or other damage. Inspect painted surfaces for chips, scratches, bare metal, roughness, or corrosion.

2. Inspect door latches for proper operation. Latches should operate smoothly, free of binding.

3. Inspect door insulation for damage.

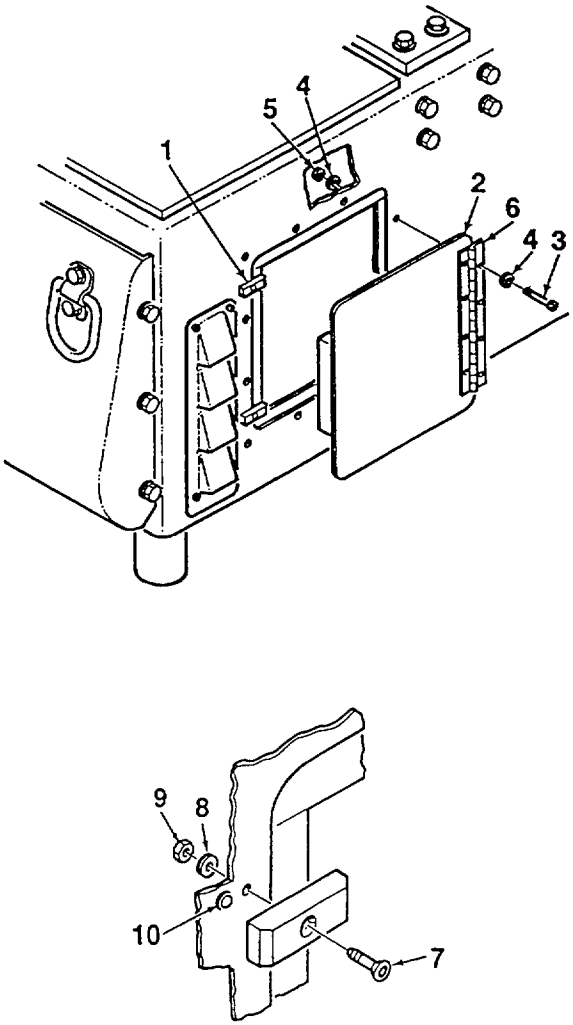

Figure 4-3. Access Door

4-13. OIL FILTER ACCESS DOOR MAINTENANCE

4. Inspect gaskets for security of attachment, cuts, tears, deterioration, or other damage.

C. REPAIR.

1. Remove and replace damaged door gasket as required. Cut bulk gasket to length and secure by peeling off back tape to expose adhesive.

2. Repair painted and stenciled surfaces in accordance with Para. 4-11.

3. Repair of parts, other than painting, is limited to removal and replacement of damaged components.

D. INSTALLATION.

1. Install two door latches (1, Figure 4-3) onto APU enclosure using screws (7), washers (8), and locknuts (9). Screw detent plungers (10) into enclosure.

2. Place door (2) in position on enclosure. Secure hinge (6) to enclosure surface using four screws (3), eight washers (4), and four locknuts (5).

3. Close door (2) and lock by turning door latches (1).

4. Connect NATO plug to receptacle and secure using strap.

4-14. VALVE ACCESS DOOR MAINTENANCE

This task covers removal, inspection, repair, and installation

INITIAL SETUP

Tools:
Shop Equipment, Automotive Maintenance and Repair (Item 1, App. B)

Equipment Condition:
APU Shut Down
NATO Plug Disconnected

Parts/Materials:
Adhesive, Loctite (item 1, App. E)
Gasket, Bulk (Item 4, App. E)

A. REMOVAL.

1. Open top front cover on enclosure by turning latches.

NOTE

Discard and replace all lockwashers and locknuts when removed.

2. Remove screw (3, Figure 4-4), lockwasher (4), and washer (5) and disconnect engine exhaust bellows (1) from rear of valve access door (2).

3. Open valve access door (2) by turning door latches (10).

4. Remove five screws (6), ten washers (7), and five locknuts (8) that secure door hinge (9) to APU enclosure.

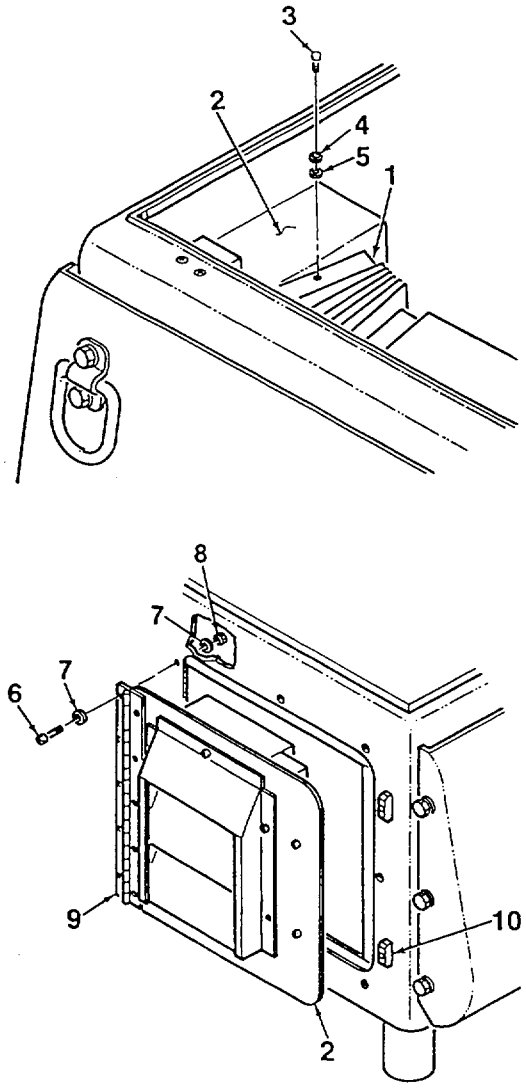

Figure 4-4. Access Door (Sheet 1 of 2)

5. Remove two door latches (10) from APU enclosure by removing screws (11), washers (12), and locknuts (13).Remove detent plungers (14) by unscrewing from enclosure.

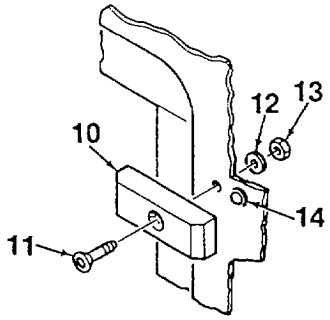

Figure 4-4. Access Door
(Sheet 2 of 2)

B. INSPECTION.

1. Inspect door for dents, cracks, warping, or other damage. Inspect painted surfaces for chips, scratches, bare metal, roughness, or corrosion.

2. Inspect door latches for proper operation. Latches should operate smoothly, free of binding.

3. Inspect exhaust louver for obstructions, clogging, or damage. Check louver fins for damage.

4. Inspect engine exhaust bellows for damage. Make sure there are no holes or tears on bellow material. Ensure secure connection to engine exhaust manifold.

C. REPAIR.

1. Remove and replace damaged door gasket as required. Cut bulk gasket to length and secure by peeling off tape to expose adhesive.

2. Repair painted and stenciled surfaces in accordance with Para. 4-11.

3. Repair of parts, other than painting, is limited to removal and replacement of damaged components.

D. INSTALLATION.

1. Install two latches (10, Figure 4-4) onto APU enclosure using screws (11), washers (12), and locknuts (13). Screw in detent plungers (14).

2. Mate door (2) to enclosure. Secure hinge (9) to enclosure surface using five screws (6), ten washers (7), and five locknuts (8).

3. Close door (2) and lock by turning door latches (10).

4. Mate engine exhaust bellows (1) to rear of door (2). Secure using screw (3), lockwasher (4), and washer (5).

5. Close front cover and secure by locking latches.

6. Connect NATO plug to receptacle and secure using strap.

4-15. NOSEPIECE ASSEMBLY MAINTENANCE

This task covers removal, inspection, testing, and installation

INITIAL SETUP

Tools:
Shop Equipment, Automotive Maintenance and Repair (Item 1, App. B)

Equipment Condition:
APU Shut Down
NATO Plug Disconnected

Parts/Materials:
Adhesive, Silicon (Item 2, App. E)

A. REMOVAL.

NOTE

Discard and replace all lockwashers and locknuts when removed.

1. Remove nosepiece assembly (1, Figure 4-5) from brackets (2) by removing six screws (3), lockwashers (4), and washers (5).

2. Remove insulation from rear of nosepiece (1) by removing caps. Discard caps.

B. INSPECTION.

1. Inspect nosepiece for dents, cracks, warping, or other damage. Inspect painted surfaces for chips, scratches, bare metal, roughness, or corrosion.

2. Inspect tie-down rings for security of attachment. If loose, tighten.

3. Inspect insulation on enclosure wall for damage. Check security of attachment.

4. Inspect lip seal on nosepiece for cuts, tears, and permanent set. Replace as required.

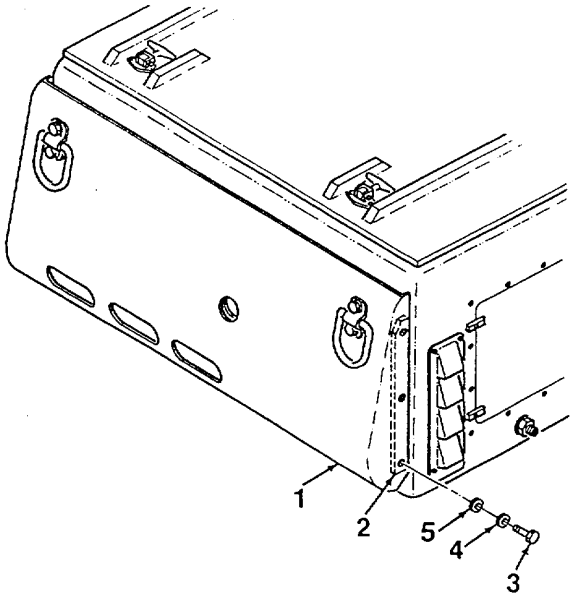

Figure 4-5. Nosepiece Assembly

4-15. NOSEPIECE ASSEMBLY MAINTENANCE

C. REPAIR.

1. Repair painted and stenciled surfaces in accordance with Para. 4-11.

2. Repair of parts, other than painting, is limited to removal and replacement of damaged components.

D. INSTALLATION.

1. Mate insulation to rear of nosepiece assembly (1, Figure 4-5) and secure using new caps.

2. Apply a thin bead of silicon adhesive to lip at top of nosepiece (1) that mates with enclosure. Apply adhesive to top 3 inches of lip on each side of nosepiece as well.

3. Mate nosepiece assembly (1) to brackets (2) and secure using six screws (3), lockwashers (4), and washers (5).

4. Connect NATO plug to receptacle and secure using strap.

4-16. TIE DOWN I HOIST RING MAINTENANCE

This task covers removal, inspection, testing, and installation

INITIAL SETUP

Tools:
Shop Equipment, Automotive Maintenance and Repair (Item 1, App. B)

Equipment Condition:
APU Shut Down
NATO Plug Disconnected

Parts/Materials:
Adhesive, Silicon (Item 2, App. E)

A. REMOVAL.

NOTE

Discard and replace all lockwashers and locknuts when removed.

1. Open top rear cover on enclosure by turning latches.

2. To remove hoist ring (1, Figure 4-6), you must first remove the APU cover assembly (Para. 412).

3. Remove hoist ring (1) and blocks (2) from cover assembly cross member by removing screws (3), washers (4), and locknuts (5). Remove rubber strip (6).

4. To remove left hand tie down ring (7), you must first remove the local control panel (Para. 4-20).

5. Remove left hand tie down ring (7) from rear panel of enclosure (8) by removing screws (9) and locknuts (10). Remove gasket (11).

6. To remove right hand tie down ring (7), you must first remove the fuel module (Para. 4-32).

7. Remove right hand tie down ring (7) from rear panel of enclosure (8) by removing screws (12) and locknuts (10). Remove gasket (11).

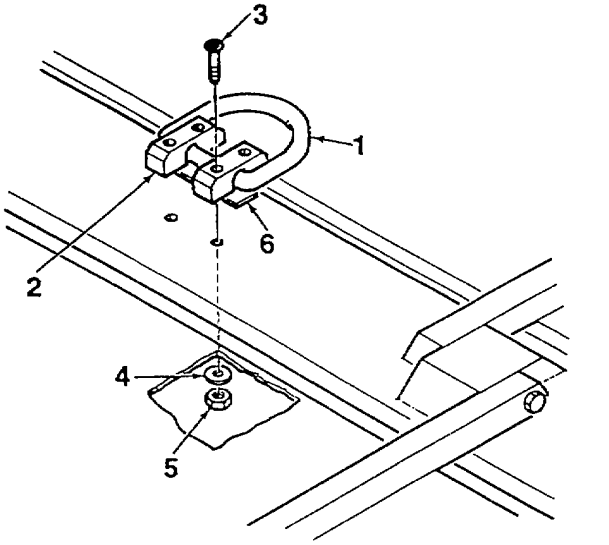

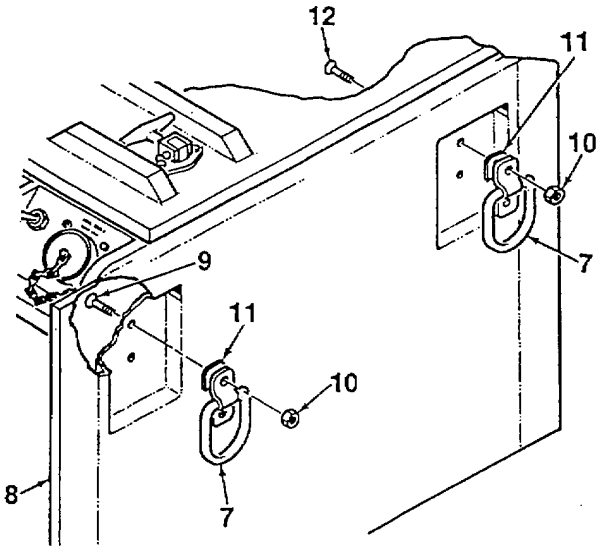

Figure 4-6. Tie Down and Hoist Rings (Sheet 1 of 2)

8. Remove nosepiece assembly (13) from brackets (22) by removing six screws (14), lockwashers (15), and washers (16).

9. Remove two tie down rings (17) from nosepiece assembly (13) by removing screws (18), washers (19), and locknuts (20). Remove gaskets (21).

B. INSPECTION.

Inspect hoist ring and tie down rings for cracks or other damage.

C. REPAIR.

1. Repair painted and stenciled surfaces in accordance with Para. 4-11.

2. Repair of parts, other than painting, is limited to removal and replacement of damaged components.

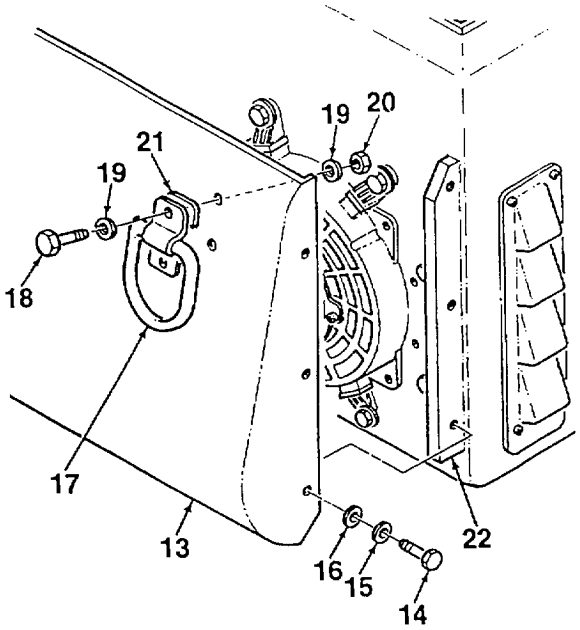

Figure 4-6. Tie Down and Hoist Rings (Sheet 2 of 2)

D. INSTALLATION.

1. Install two tie down rings (17, Figure 4-6) and gaskets (21) onto nosepiece assembly (13) using screws (18), washers (19), and locknuts (20).

2. Apply a thin bead of silicon adhesive to lip at top of nosepiece (13) that mates with enclosure. Apply adhesive to top 3 inches of lip on each side of nosepiece as well.

3. Mate nosepiece assembly (13) to brackets (22) and secure using six screws (14), lockwashers (15), and washers (16).

4. Install right hand tie down ring (7) and gaskets (11) onto rear panel of enclosure (8) using screws (12) and locknuts (10).

5. Install left hand tie down ring (7), gasket (11), and control panel mounting block using screws (9) and locknuts (10).

6. Install hoist ring (1), blocks (2), and rubber strip (6) onto cover assembly cross member using screws (3), washers (4), and locknuts (5).

7. Install local control panel (Para. 4-20). Install fuel module (Para. 4-32). Install APU cover assembly (Para. 4-12).

8. Connect NATO plug to receptacle and secure using strap.

4-17. EXTERNAL MUFFLER COVER MAINTENANCE

This task covers removal, inspection, testing, and installation

INITIAL SETUP

Tools:
Shop Equipment, Automotive Maintenance and Repair (Item 1, App. B)

Equipment Condition:
APU Shut Down
NATO Plug Disconnected

Parts/Materials:
Adhesive, Silicon (Item 2, App. E)

A. REMOVAL.

WARNING

Muffler and cover may be hot. Use caution when handling to prevent bums. Allow parts to cool before removing.

NOTE

Discard and replace all lockwashers and locknuts when removed. Remove muffler cover (1, Figure 4-7) from housing (2) by removing four screws (3), lockwashers (4), washers (5), and spacers (6).

B. INSPECTION.

1. Inspect cover for dents, cracks, warping, or other damage. Inspect painted surfaces for chips, scratches, bare metal, roughness, or corrosion.

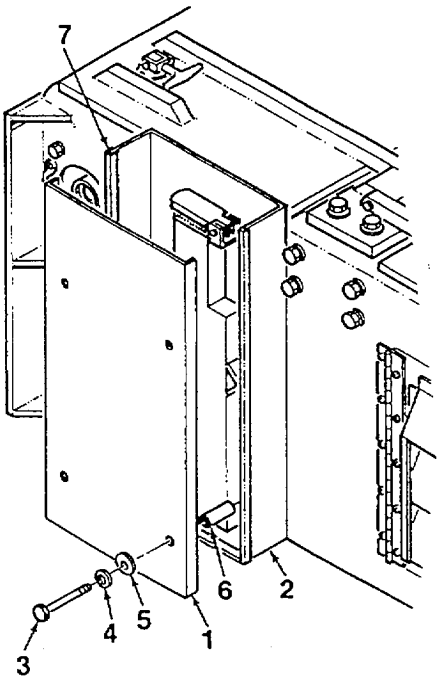

Figure 4-7. Muffler Cover

2. Inspect muffler for damage and corrosion. Replace or repair as required (Para. 4-40).

3. Inspect insulation strip (7) for damage. Ensure secure attachment. Replace as required using adhesive.

C. INSTALLATION.

1. Mate muffler cover (1, Figure 4-7) to housing (2) and secure using four screws (3), lockwashers (4), washers (5), and spacers (6).

2. Connect NATO plug to receptacle and secure using strap.

4-18. OIL COOLER HEADER MAINTENANCE

This task covers removal, inspection, testing, and installation

INITIAL SETUP

Tools:
Shop Equipment, Automotive Maintenance and Repair (Item 1, App. B)

Equipment Condition:
APU Shut Down
NATO PLug Disconnected

A. REMOVAL.

NOTE

Discard and replace all lockwashers and locknuts when removed.

Remove oil cooler header (1, Figure 4-8) from enclosure side panel by removing six screws (2), lockwashers (3), and washers (4).

B. INSPECTION.

1. Inspect header for dents, cracks, warping, or other damage. Inspect painted surfaces for chips, scratches, bare metal, roughness, or corrosion.

2. Inspect header for clogging, obstructions, or damage. Check fins for damage.

C. INSTALLATION.

1. Mate oil cooler header (1, Figure 4-8) to enclosure side panel. Secure using six screws (2), lockwashers (3), and washers (4).

2. Connect NATO plug to receptacle and secure

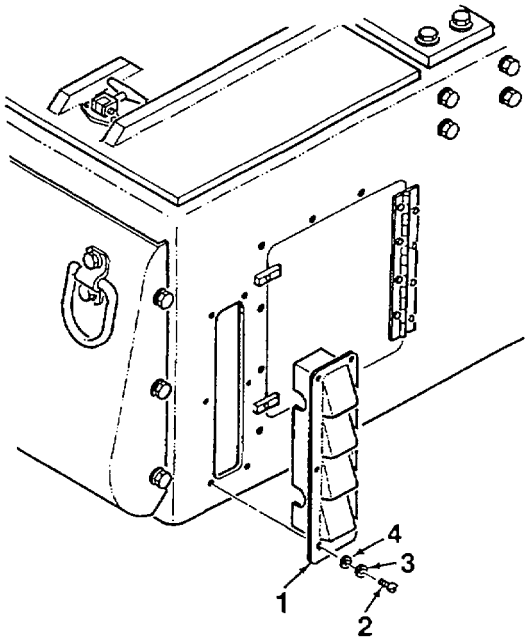

Figure 4-8. Oil Cooler Header using strap.

4-19. APU MOUNTING BRACKET MAINTENANCE

This task covers removal, inspection, testing, and installation

INITIAL SETUP

Tools:
Shop Equipment, Automotive Maintenance and Repair (Item 1, App. B)

Equipment Condition:
APU Shut Down
NATO Plug Disconnected

Parts/Materials:
Anti-Seize Compound (Item 14, App. E

A. REMOVAL.

NOTE

Discard and replace all lockwashers and locknuts when removed.

1. Remove APU mounting bracket (1, Figure 4-9) from left side panel by removing bolts (2), lockwashers (3), and washers (4).

2. Remove mounting bracket (5) from right side panel by removing bolts (6), lockwashers (7), and washers (8).

B. INSPECTION.

Inspect brackets and side panels for dents, cracks, or damage. Inspect painted surfaces for chips, scratches, bare metal, or corrosion.

C. INSTALLATION.

1. Apply anti-seize compound to bolts (2). Install mounting bracket (1) to left side panel using bolts (2), lockwashers (3), and washers (4).

2. Apply anti-seize compound to bolts (6). Install mounting bracket (5) to right side panel using bolts (6), lockwashers (7), and washers (8).

3. Connect NATO plug to receptacle and secure using strap.

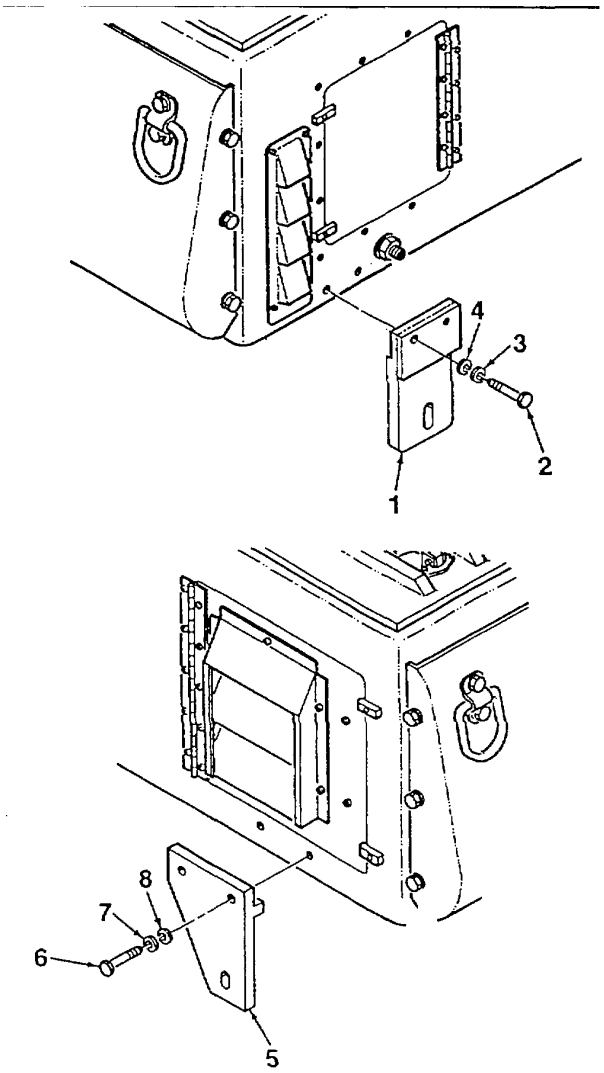

Figure 4-9. APU Mounting Brackets

4-20. LOCAL CONTROL PANEL ASSEMBLY MAINTENANCE

This task covers removal, inspection, testing, and installation

INITIAL SETUP

Tools:
Shop Equipment, Automotive Maintenance and Repair (Item 1, App. B)

Equipment Condition:
APU Shut Down
NATO Plug Disconnted

Parts/Materials:
Adhesive, Silicon (Item 2, App. E)
Gasket, Bulk (Item 4, App. E)

A. REMOVAL.

WARNING

Disconnect electrical cable from NATO receptacle before performing maintenance on the electrical system. Failure to do so can result in electrical shock.

NOTE

Discard and replace all lockwashers and locknuts when removed.

1. Open top rear cover on APU enclosure by turning latches.

2. Disconnect electrical connector (1, Figure 4-10) from rear of control panel assembly (2). Remove wiring harness from back of panel by disengaging plastic clamp (11).

3. Remove control panel assembly (2) from panel mounting blocks (9) by removing two screws (3), lockwashers (4), and washers (5).

4. Remove control panel assembly (2) from APU enclosure by removing three screws (6), lockwashers (7), and washers (8).

5. Block (9) is held in place by two screws (10), that also secure tie-down ring. Remove block only if replacement is required.

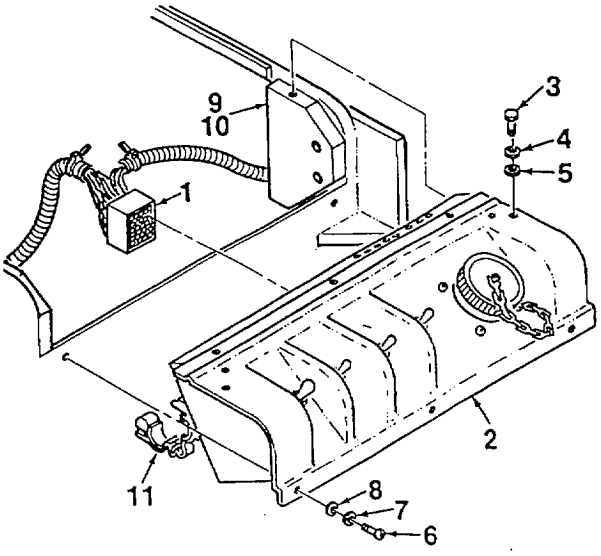

Figure 4-10. Local Control Panel
(Sheet 1 of 2)

4-20. LOCAL CONTROL PANEL ASSEMBLY MAINTENANCE

C. INSPECTION.

1. Inspect electrical connector on rear of control panel for corrosion and cleanliness. Ensure connector is securely fastened.

2. Inspect electrical wiring harness for cuts, abrasions, bare wires, and evidence of short circuits. Inspect wire insulation for damage. Ensure electrical connectors are securely attached.

3. Check control panel switches for proper operation. Inspect panel markings for legibility.

4. Inspect control panel gasket for cuts, tears, permanent set, deterioration, or other damage. Ensure gasket is securely attached.

D. REPAIR.

1. Remove corrosion from electrical connectors.

2. Remove and replace damaged gasket. Cut new gasket to length and peel off tape to expose adhesive.

3. Repair of control panel assembly consists of removal and replacement of damaged components. Refer to appropriate paragraphs for detailed procedures.

E. INSTALLATION.

1. Mate control panel assembly (2, Figure 4-10) to APU enclosure. Ensure sealing gasket is properly seated. Apply silicon adhesive to threads of three screws (6) and secure control panel assembly using screws, washers (7), and lock-washers (8).

2. Apply silicon adhesive to threads of two screws (3). Secure control panel assembly (2) to mounting blocks (9) using screws, washers (4), and lockwashers (5).

3. Connect electrical connector (1) to rear of control panel assembly (2). Secure wiring harness to back of control panel using plastic clamp (11).

4. Close top rear cover and lock by turning latches.

5. Connect NATO plug into receptacle and secure using strap

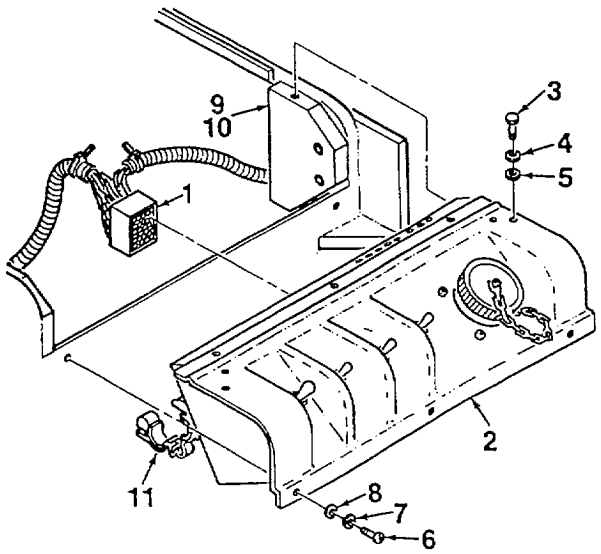

Figure 4-10. Local Control Panel. (Sheet 2 of 2)

4-21. SWITCH ASSEMBLY MAINTENANCE (LOCAL CONTROL PANEL)

This task covers removal, inspection, testing, and installation

INITIAL SETUP

Tools:
Shop Equipment, Automotive Maintenance and Repair (Item 1, App. B)

Equipment Condition:
Local Control Panel Assembly Removed (para. 4-20)

Parts/Materials:
Adhesive, Silicon (Item 2, App. E)

A. REMOVAL.

CAUTION

Use care when separating front panel of control panel assembly from enclosure to prevent damage to electrical wiring.

NOTE

Discard and replace all lockwashers and locknuts when removed.

1. Remove front panel (1, Figure 4-11) from enclosure (2) by removing five screws (3), lockwashers (4), and washers (5).

2. Tag and disconnect electrical wires from rear of switches as required for maintenance.

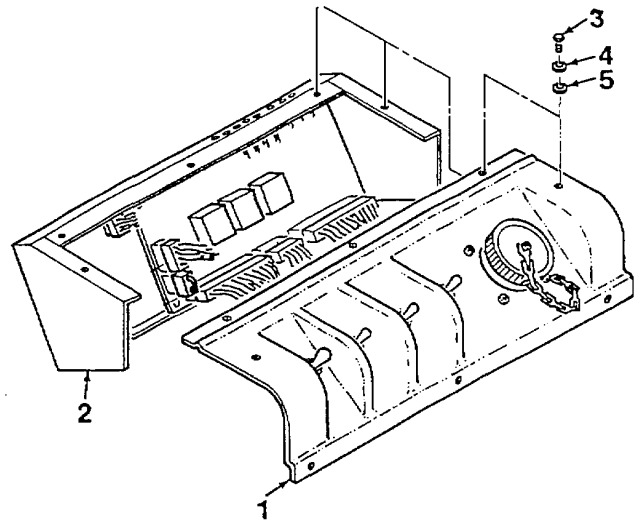

Figure 4-11. Switch Assembly (Sheet 1 of 3)

3. Remove START / PRIME RUN / OFF switch (9) from front panel (1) by removing attaching nut (6) and washers (7, 8).

4. Remove OIL / AIR PREHEAT switch (13) from front panel (1) by removing attaching nut (10) and washers (11, 12).

5. Remove APU ON switch (17) from front panel (1) by removing attaching nut (14) and washers (15, 16).

6. Remove REMOTE / LOCAL switch (21) from front panel (1) by removing attaching nut (18) and washers (19, 20).

B. INSPECTION.

Inspect operator switches for corrosion or other obvious damage. Inspect electrical connectors for damage and evidence of electrical short.

C. TESTING.

Test suspect switches for continuity. Replace as required.

D. INSTALLATION.

1. Apply adhesive to threads of REMOTE / LOCAL switch (21, Figure 4-11). Install switch onto front panel (1) and secure using nut (18) and washers (19, 20).

2. Apply adhesive to threads of APU ON switch (17). Install switch using nut (14) and washers (15, 16).

3. Apply adhesive to threads of OIL / AIR PREHEAT switch (13). Install switch using nut (10) and washers (11, 12).

4. Apply adhesive to threads of START i PRIME RUN / OFF switch (9). Install switch using nut (6) and washers (7, 8).

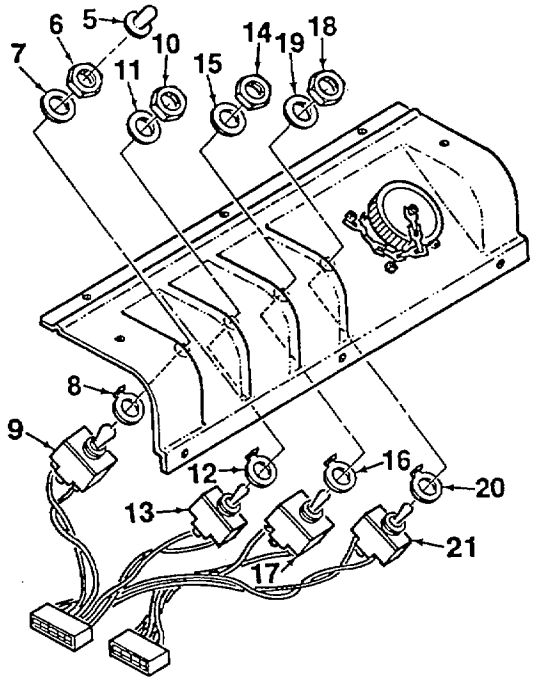

Figure 4-11. Switch Assembly
(Sheet 2 of 3)

4-21. SWITCH ASSEMBLY MAINTENANCE (LOCAL CONTROL PANEL)

5. Mate enclosure (2) to front panel (1). Connect electrical wires.

6. Secure front panel (1) to enclosure (2) using five screws (3), lockwashers (4), and washers (5).

7. Install control panel assembly (Para. 4-20).

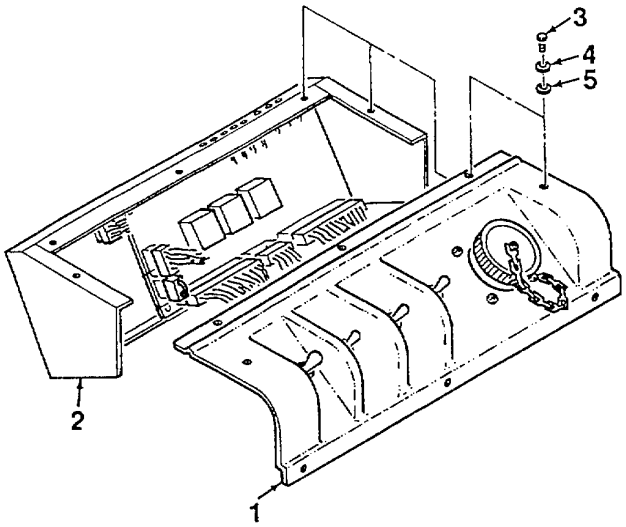

Figure 4-11. Switch Assembly
(Sheet 3 of 3)

4-22. CIRCUIT BREAKER MAINTENANCE (LOCAL CONTROL PANEL)

This task covers removal, inspection, testing, and installation

INITIAL SETUP

Tools:
Shop Equipment, Automotive Maintenance and Repair (Item 1, App. B)

Equipment Condition:
Local Control Panel Assembly Removed (para. 4-20)

Parts/Materials:
Adhesive, Silicon (Item 2, App. E)

A. REMOVAL.

CAUTION

Use care when separating front panel of control panel assembly from enclosure to prevent damage to electrical wiring.

NOTE

Discard and replace all lockwashers and locknuts when removed.

1. Remove front panel (1, Figure 4-12) from enclosure (2) by removing five screws (3), lockwashers (4), and washers (5).

2. Tag and disconnect electrical wires (9) from circuit breaker (6).

3. Remove circuit breaker (6) from enclosure (2) by removing attaching nut (7) and washer (8).

B. INSPECTION.

1. Inspect circuit breaker for corrosion or other obvious damage. Inspect electrical connectors for damage and evidence of electrical short.

2. Depress circuit breaker push button to check for proper operation. Push button shall depress and reset smoothly, free of binding.

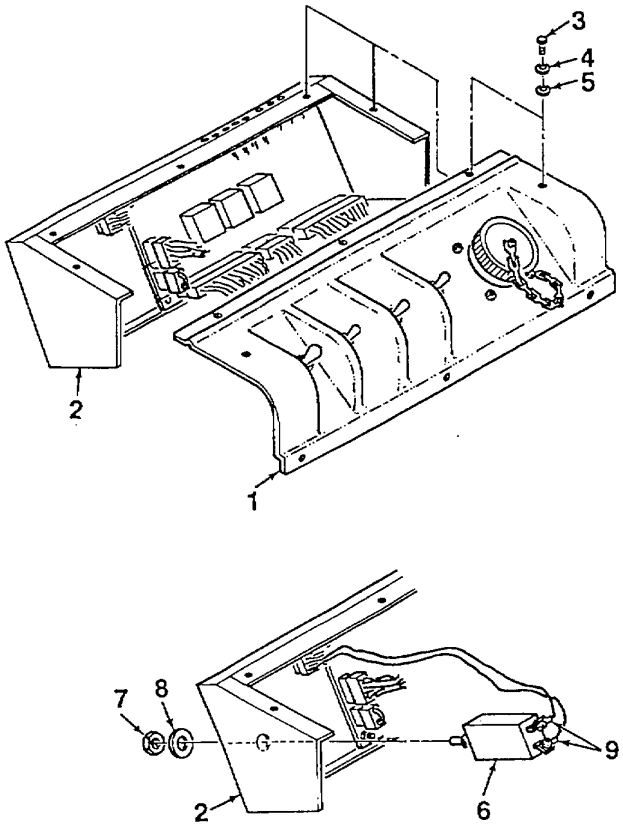

Figure 4-12. Circuit Breaker

4-22. CIRCUIT BREAKER MAINTENANCE (LOCAL CONTROL PANEL)

C. TESTING.

Test circuit breaker for continuity when reset button is depressed. Replace as required.

D. INSTALLATION.

1. Apply adhesive to threads of circuit breaker (6, Figure 4-12). Install circuit breaker onto rear panel (2) and secure using attaching nut (7) and washer (8).

2. Connect electrical wires (9) to circuit breaker (6).

3. Mate enclosure (2) to front panel (1). Secure front panel to enclosure using five screws (3), lockwashers (4), and washers (5).

4. Install control panel assembly (Para. 4-20).

4-23. REMOTE CONTROL CONNECTOR MAINTENANCE (LOCAL CONTROL PANEL)

This task covers removal, inspection, testing, and installation

INITIAL SETUP

Tools:
Shop Equipment, Automotive Maintenance and Repair (Item 1, App. B)

Equipment Condition:
Local Control Panel Assembly Removed (para. 4-20)

Parts/Materials:
Adhesive, Silicon (Item 2, App. E)

A. REMOVAL.

CAUTION

Use care when separating front panel of control panel assembly from enclosure to prevent damage to electrical wiring.

NOTE

Discard and replace all lockwashers and locknuts when removed.

1. Remove front panel (1, Figure 4-13) from enclosure (2) by removing five screws (3), lockwashers (4), and washers (5).

2. Tag and disconnect electrical wiring connector (11) from circuit board assembly.

3. Unscrew receptacle cap (6) from remote control connector (7).

4. Remove remote control connector (7) from front panel (1) by removing four screws (8) and locknuts (9).

B. TESTING.

Conduct continuity check of remote control connector and wiring using a multimeter.

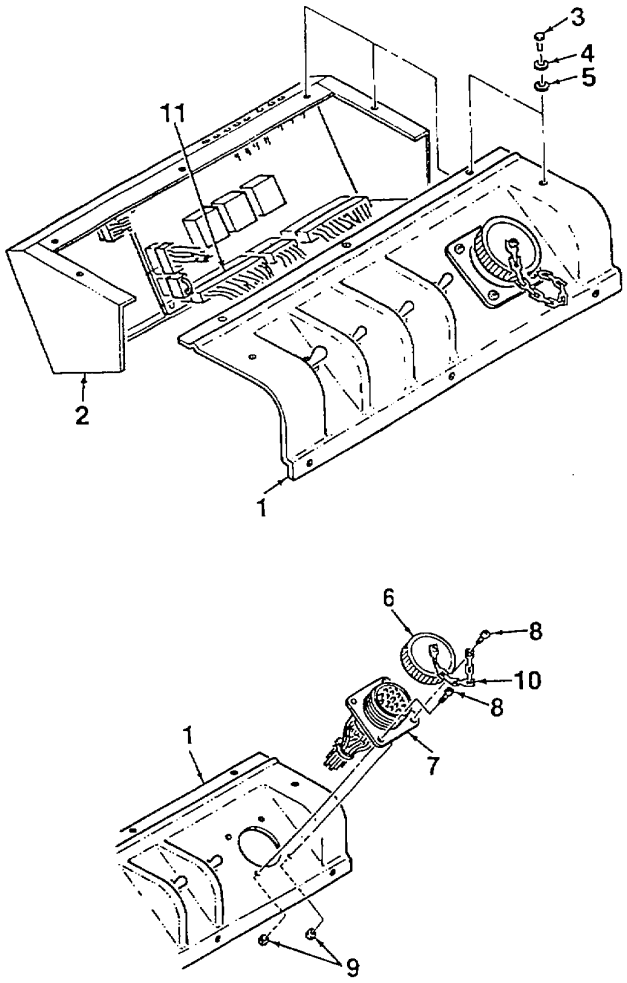

Figure 4-13. Remote Control Connector

4-23. REMOTE CONTROL CONNECTOR MAINTENANCE (LOCAL CONTROL PANEL)

C. INSPECTION.

1. Inspect remote control connector for corrosion or other obvious damage. Inspect connector for damage and evidence of electrical short. Check for bent, broken or missing pins.

2. Inspect electrical wiring for cuts, abrasions, and bare wire. Inspect wire insulation for damage.

3. Inspect wiring connector (11) for bent, broken, or missing electrical contactors. Inspect circuit card connector for damage.

D. INSTALLATION.

1. Apply silicon adhesive to rear of connector (7, Figure 4-13) where connector mates to front panel (1).

2. Install remote control connector (7) onto front panel (1) using four screws (8) and locknuts (9). Chain (10) is secured to front panel by lower right hand screw (9).

3. Install receptacle cap (6) onto remote control connector (7).

4. Mate enclosure (2) to front panel (1). Connect electrical wiring connector (11) to circuit board assembly. Secure front panel to enclosure using five screws (3), lockwashers (4), and washers (5).

5. Install control panel assembly (Para. 4-20).

4-24. CIRCUIT BOARD ASSEMBLY MAINTENANCE (LOCAL CONTROL PANEL)

This task covers removal, inspection, testing, and installation

INITIAL SETUP

Tools:
Shop Equipment, Automotive Maintenance and Repair (Item 1, App. B)

Equipment Condition:
Local Control Panel Assembly Removed (para. 4-20)

A. REMOVAL.

CAUTION

Use care when separating front panel of control panel assembly from enclosure to prevent damage to electrical wiring.

CAUTION |

Wear an anti-static bracelet when handling circuit board to prevent damage to components.

NOTE

Discard and replace all lockwashers and locknuts when removed.

1. Remove front panel (1, Figure 4-14) from enclosure (2) by removing five screws (3), lockwashers (4), and washers (5). Use care when separating to prevent damage to electrical wiring.

2. Tag and disconnect four electrical wiring connectors (7, 8, 9, 10) from circuit board assembly (11). Remove jumper (6).

3. Remove circuit card board (11) from enclosure (2) by removing six screws (12).

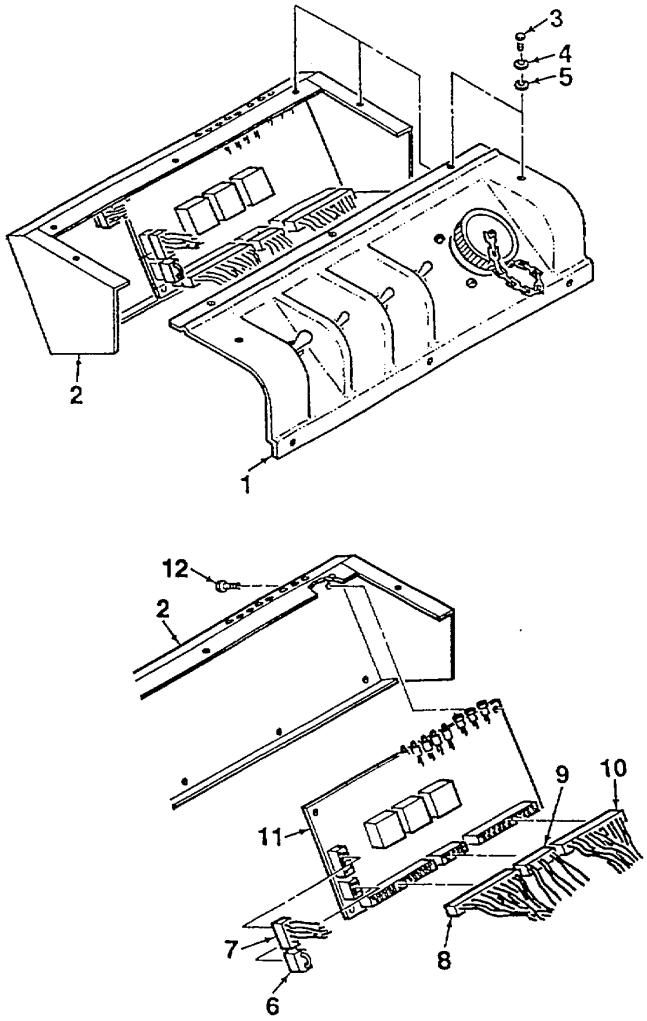

Figure 4-14. Circuit Board Assembly

4-24. CIRCUIT CARD ASSEMBLY MAINTENANCE (LOCAL CONTROL PANEL)

B. INSPECTION.

1. Inspect electrical wiring for cuts, abrasions, and bare wire. Inspect wire insulation for damage.

2. Inspect wiring connectors for bent, broken, or missing electrical contactors.

3. Inspect LED indicator lights and circuit board test points for obvious damage. Ensure all are securely fastened to the board. Inspect LEDs for cracks.

C. INSTALLATION.

CAUTION

Wear an anti-static bracelet when handling circuit board to prevent damage to components.

1. Install circuit board assembly (11, Figure 4-14) onto enclosure (2) using six screws (12).

2. Plug jumper (6) and four electrical wiring connectors (7, 8, 9, 10) into circuit board assembly (11).

3. Mate enclosure (2) to front panel (1). Secure front panel to enclosure using five screws (3), lockwashers (4), and washers (5).

4. Install control panel assembly (Para. 4-20).

4-25. VOLTMETER MAINTENANCE (REMOTE CONTROL PANEL)

This task covers removal, inspection, testing, and installation

INITIAL SETUP

Tools:
Shop Equipment, Automotive Maintenance and Repair (Item 1, App. B)

Equipment Condition:
Remote Cable Disconnected From Local Control Panel Assembly

A. REMOVAL.

CAUTION

Use care when separating remote control front panel from housing to prevent damage to electrical wiring.

NOTE

Discard and replace all lockwashers and locknuts when removed.

1. Remove front panel (1, Figure 4-15) from remote housing (2) by removing six screws (3), lockwashers (4), and washers (5).

2. Disconnect remote cable electrical connector (6) from circuit board assembly.

3. Tag and disconnect electrical wires from rear of voltmeter (7).

4. Remove voltmeter (7) from front panel (1) by removing attaching nuts (8) and bracket (9).

B. INSPECTION.

1. Inspect meter for broken glass and damage to front panel. Inspect electrical connectors for corrosion, damage, and evidence of electrical short.

2. Inspect electrical wiring for cuts, abrasions, and bare wire. Inspect wire insulation for

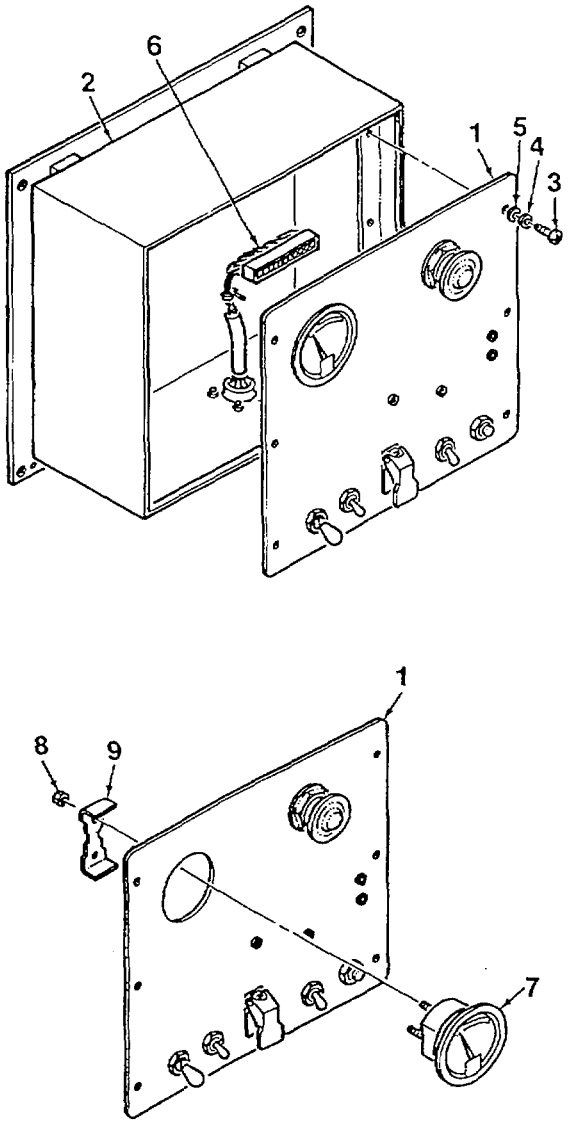

Figure 4-15. Voltmeter damage.

4-25. VOLTMETER MAINTENANCE (REMOTE CONTROL PANEL)

C. INSTALLATION.

1. Install voltmeter (7, Figure 4-15) onto front panel (1) using nuts (8) and bracket (9).
2. Connect electrical wires to rear of voltmeter (7) and secure using connector nuts.
3. Connect remote cable electrical connector (6) to circuit board assembly.
4. Mate front panel (1) to remote housing (2) and secure using six screws (3), lockwashers (4), and washers (5).

4-26. SWITCH ASSEMBLY MAINTENANCE (REMOTE CONTROL PANEL)

This task covers removal, inspection, testing, and installation

INITIAL SETUP

Tools:	Equipment Condition:
Shop Equipment, Automotive Maintenance and Repair (Item 1, App. B)	Remote Cable Disconnected From Local Control Panel Assembly

A. REMOVAL.

CAUTION

Use care when separating remote control front panel from housing to prevent damage to electrical wiring.

NOTE

Discard and replace all lockwashers and locknuts when removed.

1. Remove front panel (1, Figure 4-16) from remote housing (2) by removing six screws (3), lockwashers (4), and washers (5).

2. Disconnect remote cable electrical connector (6) from circuit board assembly. Tag and disconnect electrical wires from switches as required for maintenance.

3. Remove START / PRIME RUN / OFF switch (7) from front panel (1) by removing attaching nut (8) and washer (9).

4. Remove OIL / AIR PREHEAT switch (10) from front panel (1) by removing attaching nut (11) and washer (12).

5. Remove BATTLE SHORT switch (13) from front panel (1) by removing attaching nut (14). Remove switch guard (15).

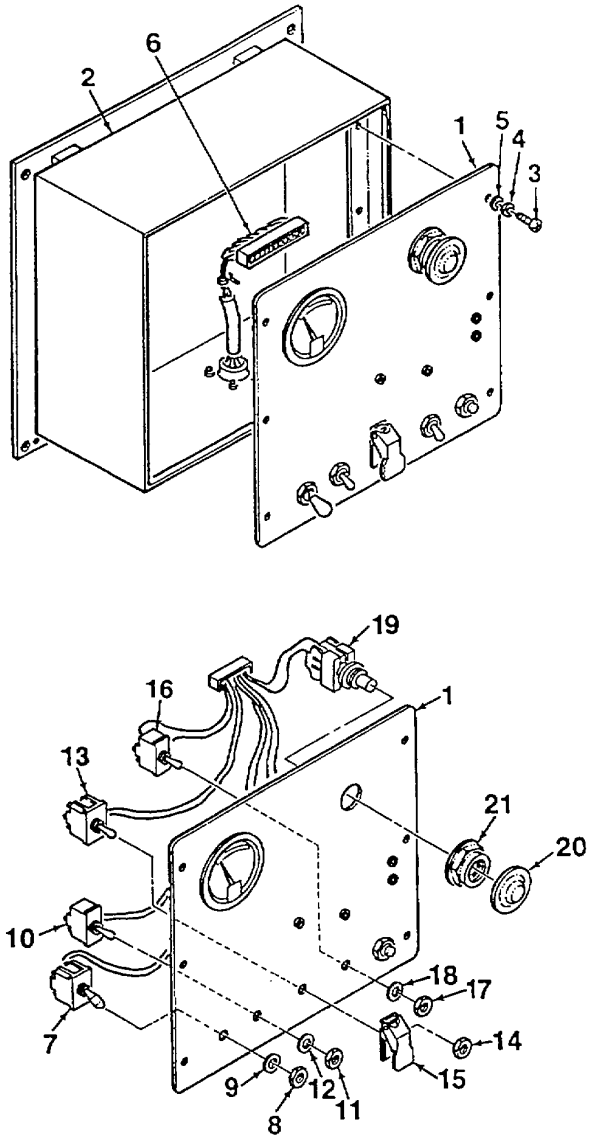

Figure 4-16. Switch Assembly

6. Remove APU ON switch (16) from front panel (1) by removing attaching nut (17) and washer (18).

7. Unscrew button (20) from EMERGENCY STOP switch shaft. Remove switch (19) from front panel (1) by removing attaching nut (21).

B. INSPECTION.

1. Inspect operator switches for corrosion or other obvious damage. Inspect electrical connectors for corrosion, damage, and evidence of electrical short.

2. Inspect electrical wiring for cuts, abrasions, and bare wire. Inspect wire insulation for damage.

3. Inspect silicon edge seal for cuts, deterioration, or other damage. Check security of attachment. Replace as required.

C. TESTING.

Test suspect switches for continuity. Replace as required.

D. INSTALLATION.

1. Install START / PRIME RUN / OFF switch (7, Figure 4-16) onto front panel (1) using nut (8) and washer (9).

2. Install OIL / AIR PREHEAT switch (10) onto front panel (1) using nut (11) and washer (12).

3. Install BATTLE SHORT switch (13) and switch guard (15) onto front panel (1) using nut (14).

4. Install APU ON switch (16) onto front panel (1) using nut (17) and washer (18).

5. Install EMERGENCY STOP switch (19) onto front panel (1) using nut (21). Screw button (20) onto switch shaft.

6. Connect remote cable electrical connector (6) to circuit card assembly.

7. Mate front panel (1) to remote housing (2) and secure using six screws (3), lockwashers (4), and washers (5).

4-27. LAMP TEST SWITCH MAINTENANCE (REMOTE CONTROL PANEL)

This task covers removal, inspection, testing, and instillation

INITIAL SETUP

Tools:
Shop Equipment, Automotive Maintenance and Repair (Item 1, App. B)

Equipment Condition:
Remote Cable Disconnected From Local Control Panel Assembly

A. REMOVAL.

CAUTION
Use care when separating remote control front panel from housing to prevent damage to electrical wiring.

NOTE
Discard and replace all lockwashers and locknuts when removed.

1. Remove front panel (1, Figure 4-17) from remote housing (2) by removing six screws (3), lockwashers (4), and washers (5).

2. Tag and disconnect remote cable electrical connector (6) from circuit board assembly.

3. Before disconnecting electrical wires from lamp test switch (7), test switch in accordance with paragraph C.

4. Disconnect electrical wires from rear of lamp test switch (7).

5. Remove lamp test switch (7) from front panel (I) by removing attaching nut (8).

B. INSPECTION.

1. Inspect lamp test switch for corrosion or other obvious damage. Inspect electrical connectors for corrosion, damage, and evidence of electrical short.

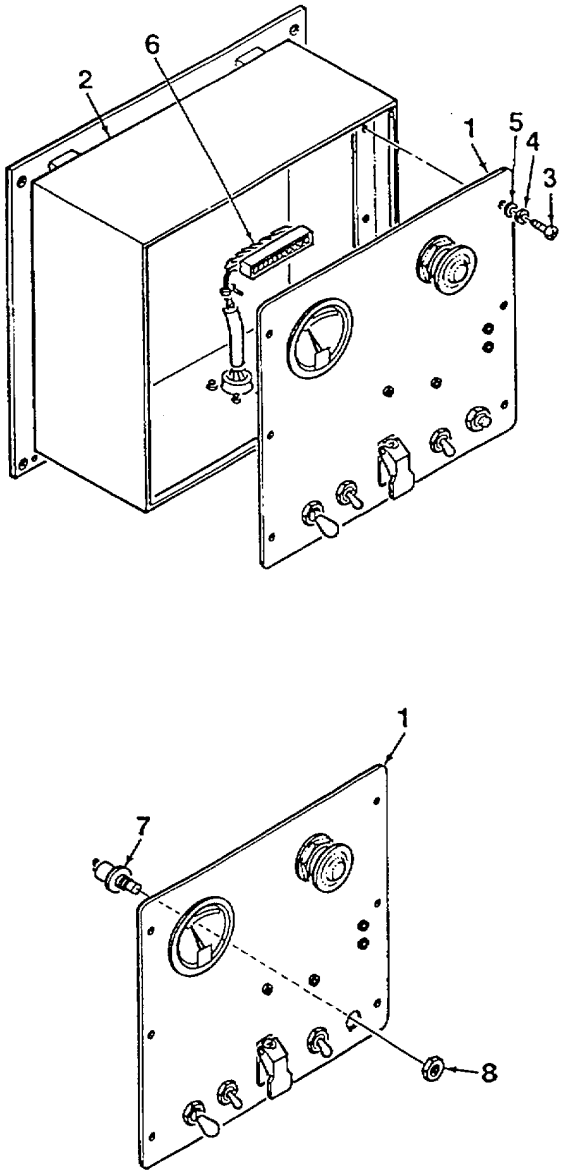

Figure 4-17. Lamp Test Switch

4-27. LAMP TEST SWITCH MAINTENANCE (REMOTE CONTROL PANEL)

2. Inspect electrical wiring for cuts, abrasions, and bare wire. Inspect wire insulation for damage.

C. TESTING.

1. Carefully peel back shrink-wrap to expose terminals on rear of lamp test switch (7).

2. Press switch and check for continuity between terminals. Replace as required.

D. INSTALLATION.

1. Install lamp test switch (7, Figure 4-17) onto front panel (1) using attaching nut (8).

2. Solder electrical wires to rear of lamp test switch (7).

3. Connect remote cable electrical connector (6) to circuit board assembly.

4. Mate front panel (1) to remote housing (2) and secure using six screws (3), lockwashers (4), and washers (5).

4-28. CIRCUIT BOARD ASSEMBLY MAINTENANCE (REMOTE CONTROL PANEL)

This task covers removal, inspection, and instillation

INITIAL SETUP

Tools:
Shop Equipment, Automotive Maintenance and Repair (Item 1, App. B)

Equipment Condition:
Remote Cable Disconnected From Local Control Panel Assembly

A. REMOVAL.

CAUTION

Use care when separating remote control front panel from housing to prevent damage to electrical wiring.

CAUTION

Wear an anti-static bracelet when handling circuit board to prevent damage to components.

NOTE

Discard and replace all lockwashers and locknuts when removed.

1. Remove front panel (1, Figure 4-18) from remote housing (2) by removing six screws (3), lockwashers (4), and washers (5).

2. Disconnect remote cable electrical connector (6) from circuit board assembly.

3. Disconnect electrical connector (7) from circuit board assembly (8). Remove circuit card assembly from front panel (1) by removing five screws (9).

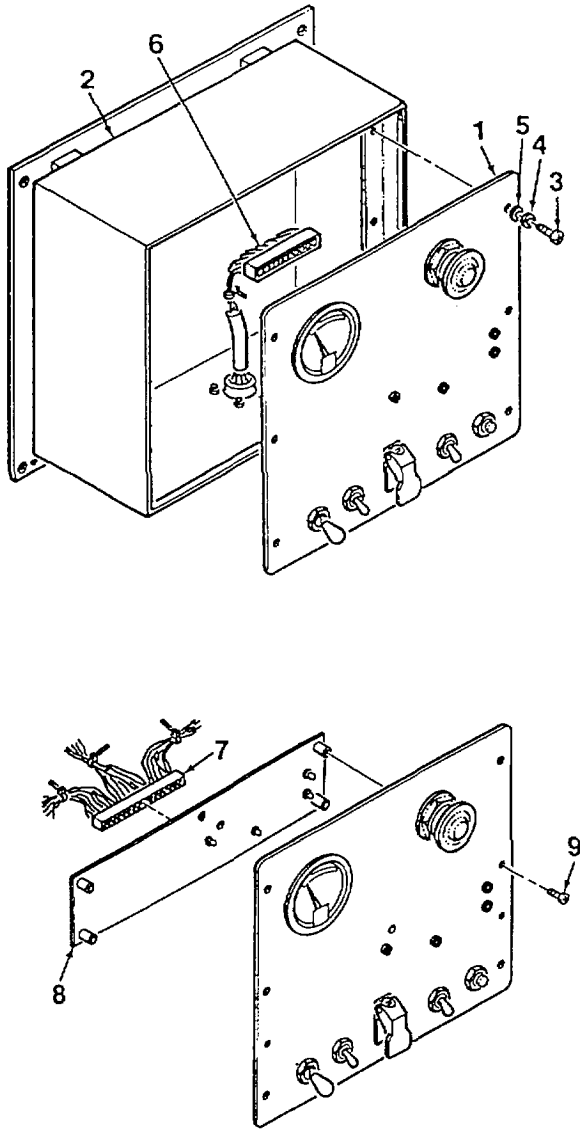

Figure 4-18. Circuit Board Assembly

4-28. CIRCUIT BOARD ASSEMBLY MAINTENANCE (REMOTE CONTROL PANEL)

B. INSPECTION.

1. Inspect circuit board assembly for obvious damage. Inspect electrical connectors for corrosion, damage, and evidence of electrical short. Check for bent, broken, or missing pins.
2. Inspect electrical wiring for cuts, abrasions, and bare wire. Inspect wire insulation for damage.
3. Inspect wiring connectors for bent, broken, or missing electrical contactors.
4. Inspect LED indicator lights for obvious damage. Ensure LEDs are securely fastened to circuit board.

C. INSTALLATION.

CAUTION

Wear an anti-static bracelet when handling circuit board to prevent damage to components.

CAUTION

Ensure circuit card LEDs are aligned with front panel mounting holes to prevent damage to LEDs.

1. Attach circuit board assembly (8, Figure 4-18) to front panel (1) using five screws (9).
2. Connect electrical connector (7) to circuit board assembly (8).
3. Connect remote cable electrical connector (6) to circuit board assembly.
4. Mate front panel (1) to remote housing (2) and secure using six screws (3), lockwashers (4), and washers (5).

4-29. REMOTE CONTROL CABLE MAINTENANCE

This task covers removal, testing, inspection, and instillation

INITIAL SETUP

Tools:
Shop Equipment, Automotive Maintenance and Repair (Item 1, App. B)

Equipment Condition:
Remote Cable Disconnected From Local Control Panel Assembly

A. REMOVAL.

CAUTION

Use care when separating remote control front panel from housing to prevent damage to electrical wiring.

NOTE

Discard and replace all lockwashers and locknuts when removed.

1. Remove front panel (1, Figure 4-19) from remote housing (2) by removing six screws (3), lockwashers (4), and washers (5).

2. Disconnect remote cable electrical connector (6) from circuit board assembly.

3. Disconnect remote receptacle (7) from electrical plug (8).

4. Remove electrical plug (8) from remote housing (2) by removing four screws (9) and locknuts (10). Feed electrical connector and wire through hole in bottom of housing.

5. Remove vehicle mounting plate (11) from remote housing (2) by removing four locknuts (12), screws (13), and washers (14, 15). Separate halves of rubber isolators (16).

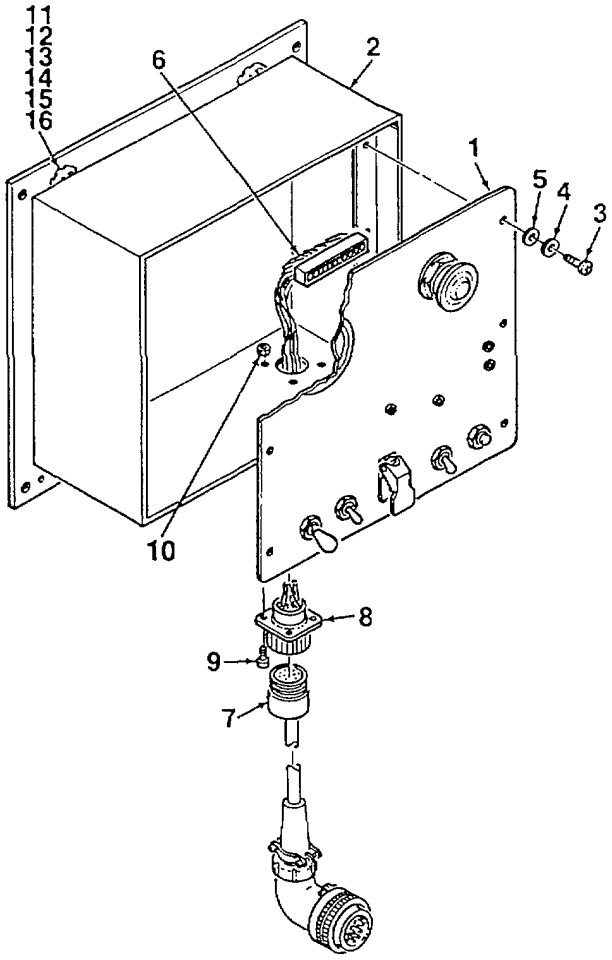

Figure 4-19. Remote Control Cable

4-29. REMOTE CONTROL CABLE MAINTENANCE

B. TESTING.

Conduct continuity check of remote control cable using a digital multimeter.

C. INSPECTION.

1 Inspect remote cable electrical connector for damage. Inspect connector for corrosion, damage, and evidence of electrical short. Check for bent, broken, or missing pins.

2. Inspect electrical wiring for cuts, abrasions, and bare wire. Inspect wire insulation for damage.

3. Inspect wiring connectors for bent, broken, or missing electrical contacts.

D. INSTALLATION.

1. Install halves of four rubber isolators (16, Figure 4-19) onto remote housing (2). Mate vehicle mounting plate (11) to housing and secure using four screws (13), washers (14, 15), and locknuts (12)

2. Feed electrical connector and wiring through hole in bottom of remote housing (2). Mate flanged plug (6) to housing and secure using four screws (9) and locknuts (10).

3. Connect remote receptacle (7) to plug (8).

4. Connect remote cable electrical connector (6) to circuit board assembly.

5. Mate front panel (1) to remote housing (2) and secure using six screws (3), lockwashers (4), and washers (5).

4-30. FUEL MODULE MAINTENANCE

This task covers removal, inspection, repair, and installation

INITIAL SETUP

Tools:
Shop Equipment, Automotive Maintenance and Repair (Item 1, App. B)

Equipment Condition:
APU Shut Down

A. REMOVAL

WARNING

Disconnect electrical cable from NATO receptacle before performing any maintenance on the fuel module. Failure to do so can result in electrical shock.

NOTE

Discard and replace all lockwashers and locknuts when removed.

1. Disconnect NATO plug from fuel module receptacle. Disconnect vehicle fuel supply hose from fuel fitting.

2. Open top rear cover on enclosure by turning latches.

3. Slide fuel module cover latches (3, Figure 4-20) back to disengage, and remove fuel module cover (1) from fuel module enclosure (2).

4. Remove cover latches (3) and locking screws only if replacement is required.

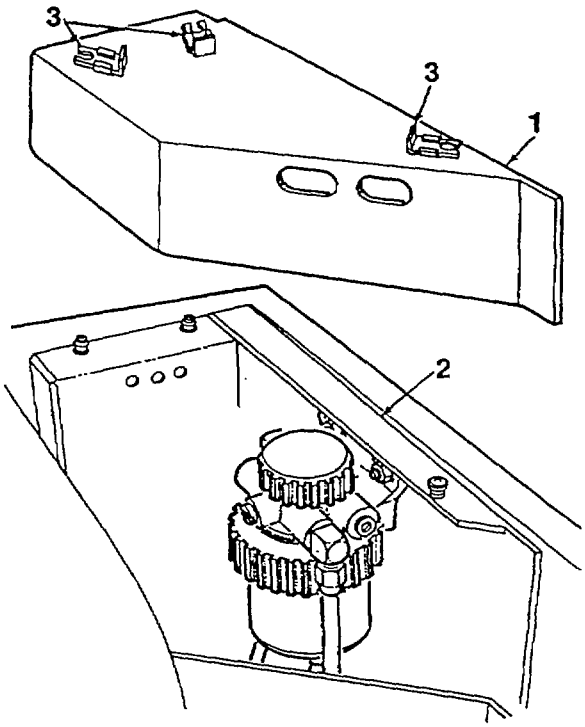

Figure 4-20. Fuel Module (Sheet 1 of 4)

4-30. FUEL MODULE MAINTENANCE

5. Disconnect electrical wiring connector (4) from electrical receptacle (5).

6. Tag and disconnect electrical cables (6) from feed-thru studs (7) by removing stud nuts and washers.

7. Tag and disconnect fuel supply line (8) from fitting (9). Tag and disconnect fuel return line (10) from fitting (11).

8. Remove plate (12) by removing screws (13), lockwashers (14), and washers (15).

9. Remove latch block (18) by removing screws (17).

10. Remove fuel module enclosure (2) from inside of APU enclosure by removing six bolts (18), lockwashers (19), and washers (20). Place fuel module on a clean work surface for further maintenance.

B. INSPECTION.

1. Inspect fuel module components for signs of leakage and damage. Check security of all electrical and fluid connections.

2. Inspect fuel hoses for cuts, cracks, or deterioration. Check for security of attachment to fittings.

3. Inspect electrical wiring for cuts, abrasions, and bare wire. Check wiring insulation for damage.

4. Inspect feed-thru studs for corrosion or other obvious damage. Check for evidence of electrical short.

5. Inspect fuel module cover and enclosure for dents, cracks, corrosion, or deformation.

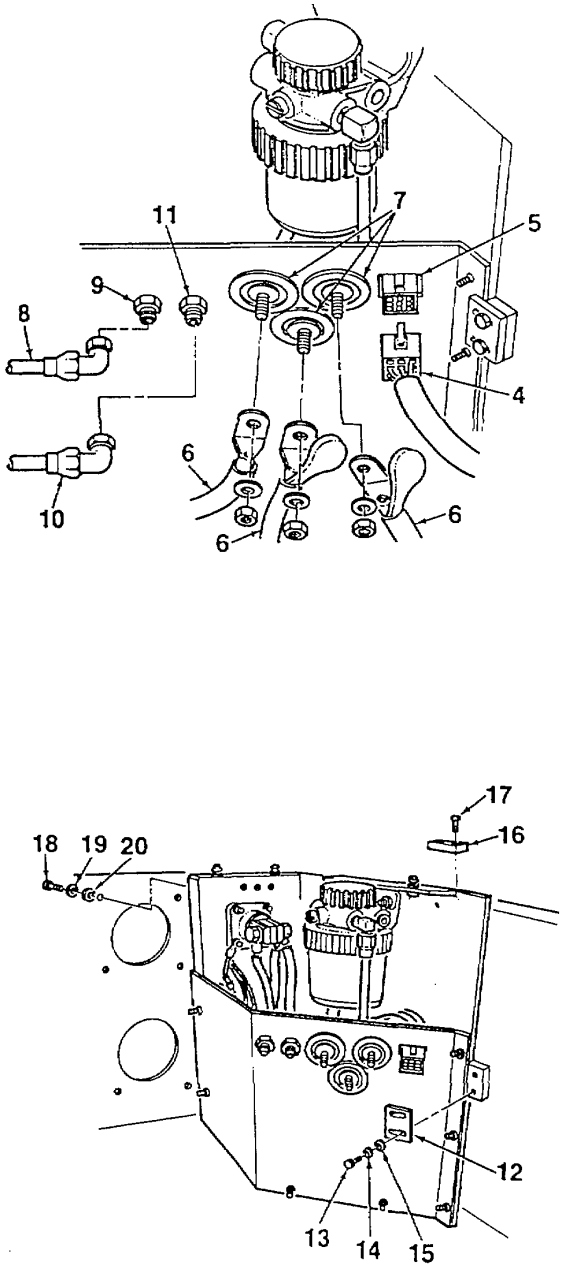

Figure 4-20. Fuel Module (Sheet 2 of 4)

4-30. FUEL MODULE MAINTENANCE

C. REPAIR.

Repair of the fuel module assembly is limited to removal and replacement of defective components. Refer to applicable task for component removal and replacement procedures.

D. INSTALLATION.

1. Mate fuel module enclosure (2, Figure 4-20) to APU enclosure and secure using six bolts (18), lockwashers (19), and washers (20).

2. Install plate clip (12) using two screws (13), lockwashers (14), and washers (15).

3. Install latch block (18) using screws (17).

4. Connect fuel supply line (8) to fitting (9).
   Connect fuel return line (10) to fitting (11).

5. Connect electrical cables (6) to feed-thru studs (7) using stud nuts and washers.

6. Connect electrical wiring connector (4) to electrical receptacle (5).

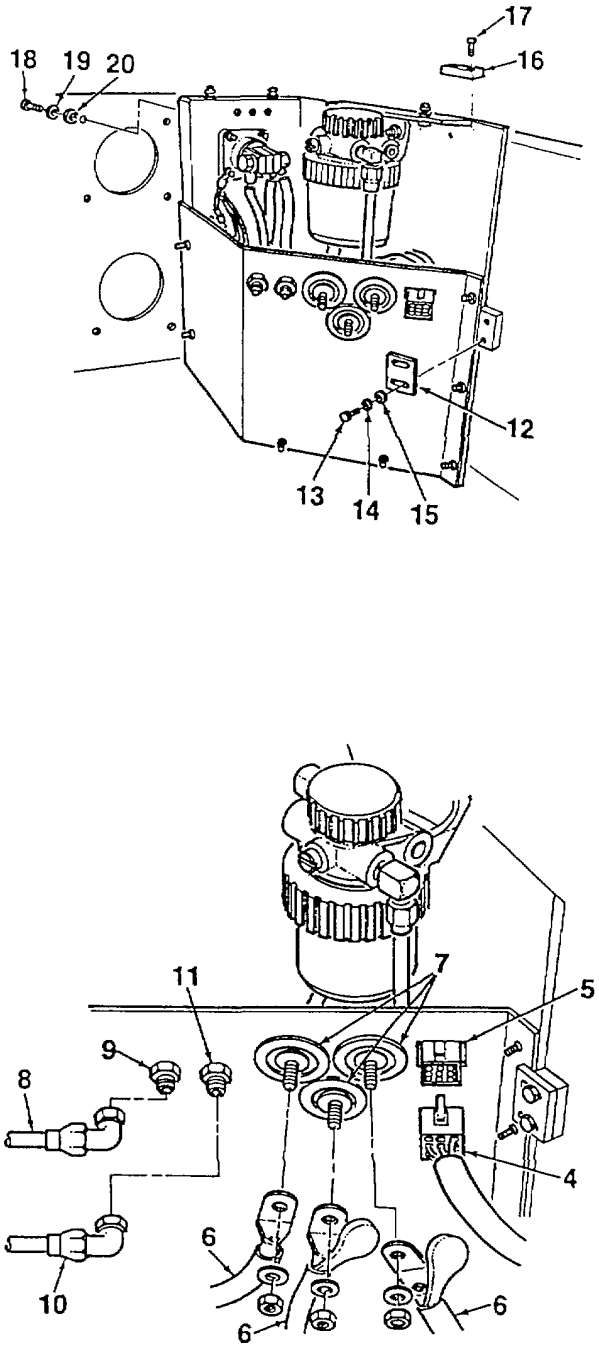

Figure 4-20. Fuel Module (Sheet 3 of 4)

4-30. FUEL MODULE MAINTENANCE

7. If removed, install cover latches (3) and locking screws.

8. Mate fuel module cover (1) to enclosure (2). Lock in place by engaging cover latches (3).

9. Close top rear cover and lock using latches.

10. Connect vehicle fuel supply hose to fuel fitting. Connect NATO plug to receptacle.

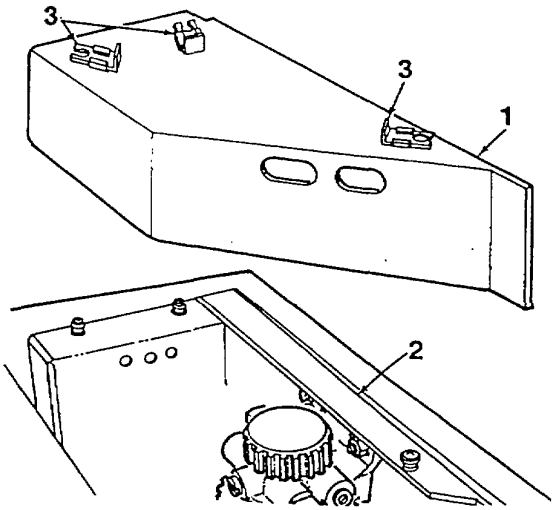

Figure 4-20. Fuel Module (Sheet 4 of 4)

4-31. FUEL FILTER WATER SEPARATOR MAINTENANCE

This task covers inspection and repair.

INITIAL SETUP

Tools:
Shop Equipment, Automotive Maintenance and Repair (Item 1, App. B)

Equipment Condition:
Fuel Module Removed (Para. 4-30)

Parts/Materials:
Sealant, Thread (Item 4, App. E)

A. REMOVAL

NOTE

Discard and replace all lockwashers and locknuts when removed.

1. Slide fuel module cover latches (3, Figure 4-21) back to disengage, and remove fuel module cover (1) from fuel module enclosure (2).

2. Remove cover latches (3) and locking screws only if replacement is required.

3. Open drain valve (4) and drain trapped water through hose (5). Close drain valve and disconnect hose.

4. Unscrew filter ring (6) from filter header (7).

5. Remove filter element (8) from filter header (7). Discard element.

6. Tag fuel hoses (9). Disconnect fuel hoses from elbows (10, 11). Remove elbows from fuel filter header (7).

7. Remove filter header (7) from fuel module by removing screws (12), washers (13), and locknuts (14).

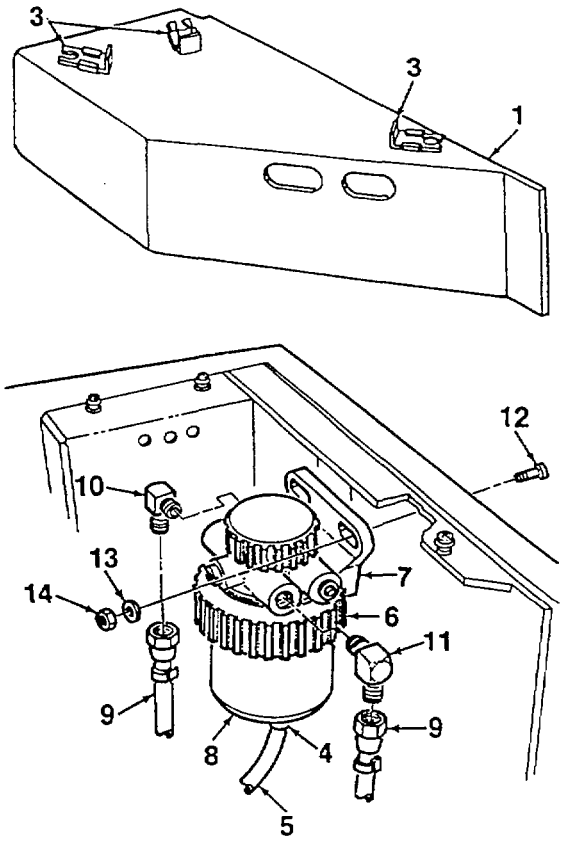

Figure 4-21. Filter Water Separator

4-31. FUEL FILTER WATER SEPARATOR MAINTENANCE

B. INSPECTION.

1. Inspect fuel filter water separator for signs of leakage and damage. Inspect for cracks, dents, scratches, and signs of corrosion.

2. Inspect fuel hoses for punctures, cuts, cracks, or deterioration.

3. Inspect all fuel fittings for damage and deformation. Inspect for stripped, crossed, or damaged threads.

C. INSTALLATION.

1. Apply thread sealant to threads of elbows (10, 11, Figure 4-21) that install into fuel filter header (7). Install elbows (see figure for orientation).

2. Mate filter header (7) to fuel module and secure using screws (12), washers (13), and locknuts (14).

3. Connect drain hose (5) to drain valve (4). Ensure drain valve is closed.

4. Connect fuel hoses (9) to elbows (10, 11).

5. Screw new filter element (8) into header (7). Tighten bolt (8) to secure element. Install filter ring (6).

6. Mate fuel module cover (I) to enclosure housing (2). Lock in place by engaging cover latches (3).

7. Install fuel module (Para. 4-30).

4-32. FUEL PUMP ASSEMBLY MAINTENANCE

This task covers inspection and repair.

INITIAL SETUP

Tools:
Shop Equipment, Automotive Maintenance and Repair (Item 1, App. B)

Equipment Condition:
Fuel Module Removed (Para. 4-30)

Parts/Materials:
Sealant, Thread (Item 4, App. E)

A. REMOVAL

NOTE

Discard and replace all lockwashers and locknuts when removed.

1. Remove fuel module front plate (1, Figure 4-22) from enclosure (2) by removing four screws (3), lockwashers (4), washers (5), and two screws (6).

2. Place a container near the module to capture fluid during disassembly. Tag and disconnect two fuel hoses (10) from rear of bulkhead fittings (7).

3. Disengage electrical connector (8) from front plate (1).

4. Tag and disconnect electrical cables from rear of feed-thru studs (9) by removing stud nuts and washers.

5. Disconnect fuel hose (21) from fuel water separator (11).

6. Disconnect fuel hose (14) from fitting (15). Remove fitting from fuel pump (12).

7. Tag and disconnect electrical wires (13).

8. Remove fuel pump (12) from bottom of fuel module by removing nuts (16) and washers (17, 18, 19) from studs (20). Remove rubber strip (22) only if replacement is required.

9. Disconnect fuel hose (21) from fuel pump (12).

B. INSPECTION.

1. Inspect fuel pump for signs of leakage and damage. Inspect for cracks, dents, scratches, and signs of corrosion.

2. Inspect fuel hoses for punctures, cuts, cracks, or deterioration.

4-32. FUEL PUMP ASSEMBLY MAINTENANCE

3. Inspect all fuel fittings for damage and deformation. Inspect for stripped, crossed, or damaged threads.

4. Inspect electrical wiring for cuts, abrasions, or bare wire. Inspect wire insulation for damage.

C. INSTALLATION.

1. Apply thread sealant to threads of elbow on hose (21, Figure 4-22). Install hose into fuel pump (12). Refer to figure for orientation of elbow.

2. Apply thread sealant to threads of fitting (15) that install into fuel pump (12). Install fitting into pump.

3. Install fuel pump (12) onto studs (20) using nuts (16) and washers (17, 18, 19).

4. Connect electrical wires (13).

5. Connect fuel hose (14) to fitting (15).

6. Install fuel module front plate (1) onto enclosure (2) using four screws (3), lockwashers (4), washers (5), and two screws (6).

7. Connect two fuel hoses (10) to rear of bulkhead fittings (7).

8. Connect electrical cables to rear of feed-thru studs (9) and secure using stud nuts and washers. Install electrical connector (8) into hole in front panel.

9. Install fuel module assembly (Para. 4-30).

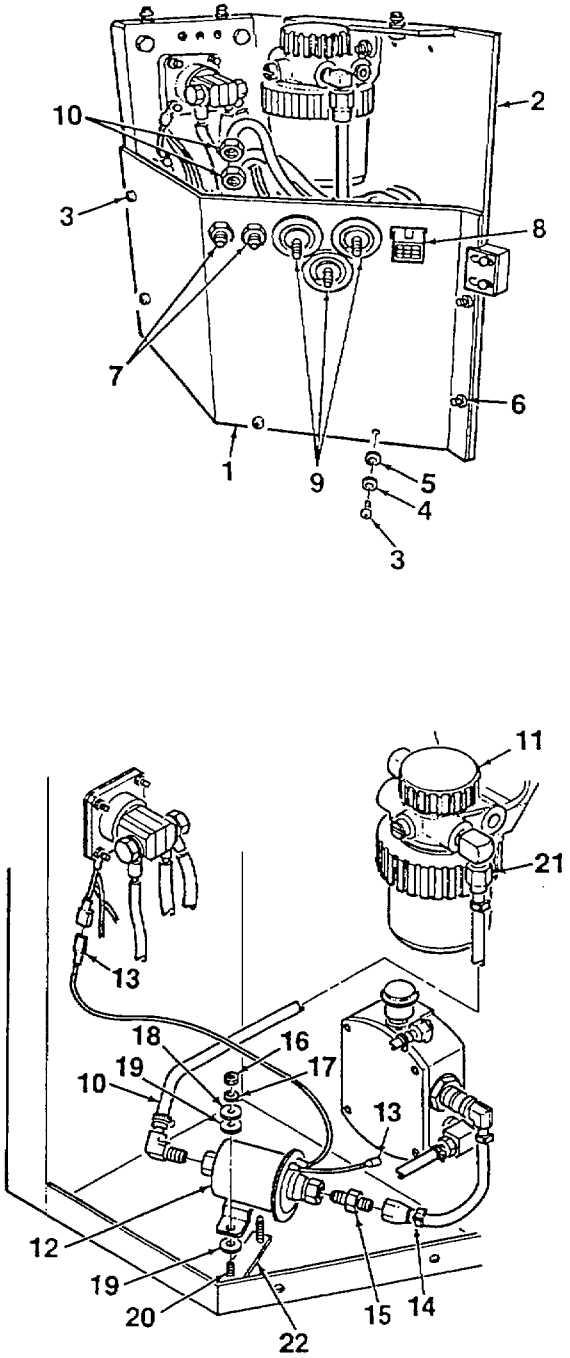

Figure 4-22. Fuel Pump Assembly

4-33. FLOAT VALVE HOUSING ASSEMBLY MAINTENANCE

This task covers inspection and repair.

INITIAL SETUP

Tools:
Shop Equipment, Automotive Maintenance and Repair (Item 1, App. B)

Equipment Condition:
Fuel Module Removed (Para. 4-30)

Parts/Materials:
Sealant, Thread (Item 4, App. E)

A. REMOVAL

NOTE

Discard and replace all lockwashers and locknuts when removed.

1. Remove fuel module front plate (1, Figure 423) from enclosure (2) by removing four screws (3), lockwashers (4), washers (5), and two screws (6).

2. Tag and disconnect two fuel hoses (10) from rear of bulkhead fittings (7).

3. Disengage electrical connector (8) from front plate (1).

4. Tag and disconnect electrical cables from rear of feed-thru studs (9) by removing stud nuts and washers.

5. Disconnect fuel hose (14) from fuel pump.

6. Remove float valve housing assembly (13) from enclosure (2) by removing screws (36), locknuts (21), and washers (22).

7. Disconnect fuel hose (13) and elbow (11) from housing assembly (37). Remove hose clip (12) only if replacement is required.

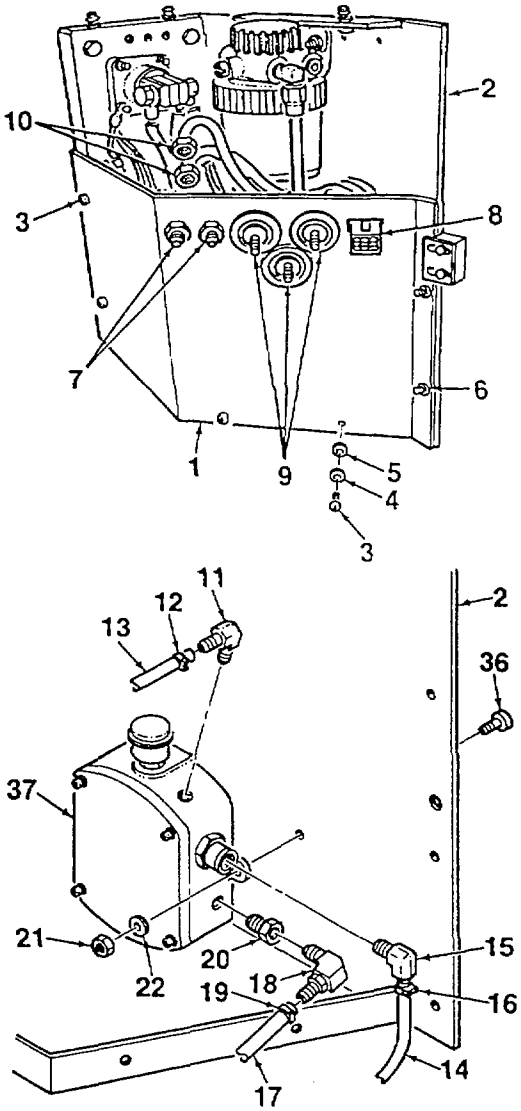

Figure 4-23. Float Valve Housing (Sheet 1 of 4)

4-33. FLOAT VALVE HOUSING ASSEMBLY MAINTENANCE

8. Disconnect fuel hose (14) and elbow (15) from housing assembly (37). Remove hose clip (16) only if replacement is required.

9. Disconnect fuel hose (17), elbow (18), and adapter (20) from housing assembly (37). Remove hose clip (19) only if replacement is required.

B. DISASSEMBLY.

1. Remove cover (23, Figure 4-23) from housing (24) by removing screws (25) and washers (26). Remove cover gasket (27).

2. Detach float (28) from shutoff valve (29) by removing pin (30). Carefully remove float from housing (24).

3. Remove shutoff valve (29) from housing (24) by removing nut (31). Inspect O-ring (32) for damage. Remove and discard if damaged.

4. Remove vent (33) from housing (24). Remove plugs (34, 35) only as required.

C. INSPECTION.

1. Inspect cover gasket for cuts, tears, deterioration, or signs of permanent set. Replace gasket if any damage is suspected.

2. Inspect float for damage. Inspect for cracks, dents, scratches, and signs of corrosion.

3. Inspect shutoff valve for damage and signs of corrosion. Check that valve orifice is clear and free from contaminant build-up. Ensure valve flap opens freely, free of binding or sticking.

4. Inspect cover and housing for cracks, dents, scratches, and signs of leakage. Inspect housing ports for damage

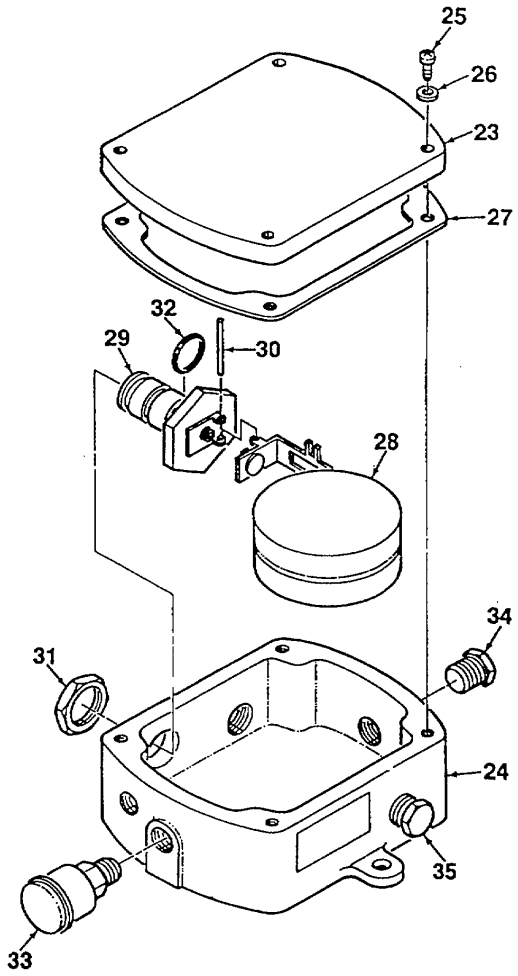

Figure 4-23. Float Valve Housing. (Sheet 2 of 4)

4-33. FLOAT VALVE HOUSING ASSEMBLY MAINTENANCE

5. Inspect fuel hoses for punctures, cuts, cracks, or deterioration.

6. Inspect all fuel fittings for damage and deformation. Inspect for stripped, crossed, or damaged threads.

D. REPAIR.

Repair of the float valve housing assembly is limited to removal and replacement of damaged components.

E. ASSEMBLY.

1. Install thread sealant to threads of vent (33, Figure 4-23) and plugs (34, 35). Install vent and plugs into housing (24).

2. Mate shutoff valve (29) to housing (24), ensuring proper orientation of float hinge. Secure valve to housing using nut (31).

3. Install float (28) into housing (24) and attach to shutoff valve (29) using pin (30). Move float with fingers to ensure operation is smooth and free of binding.

4. Mate cover gasket (27) to housing (24), ensuring proper hole alignment. Install cover (23) using screws (25) and washers (26).

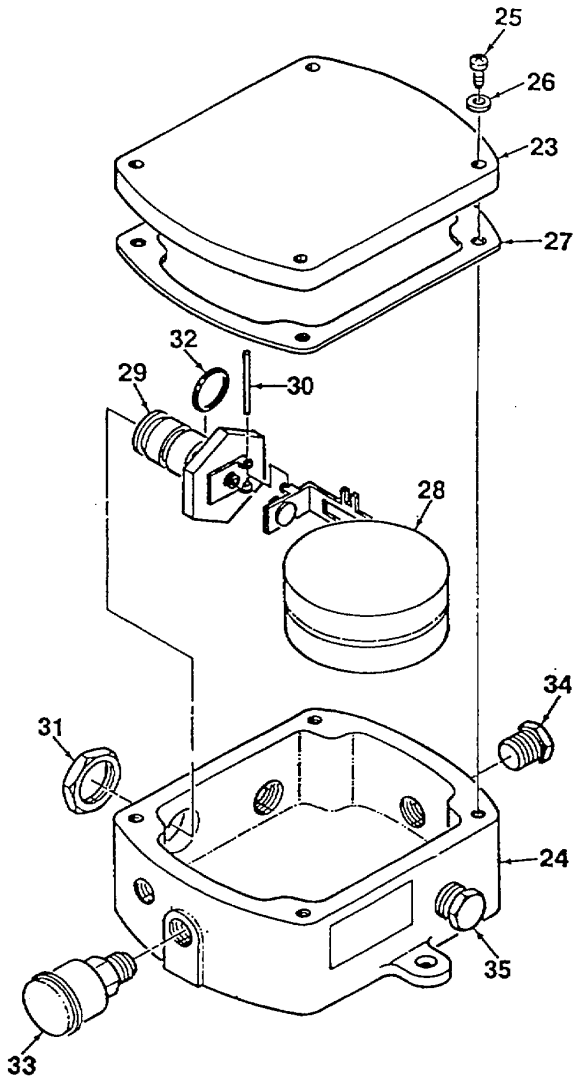

Figure 4-23. Float Valve Housing (Sheet 3 of 4)

4-33. FLOAT VALVE HOUSING ASSEMBLY MAINTENANCE

F. INSTALLATION.

1. Install thread sealant on threads of elbows (11, 15, Figure 4-23) and adapter (20) that install into float valve housing assembly (37). Install elbows and adapter. Refer to figure for correct orientation of elbows.

2. Install housing assembly (37) using screws (36), locknuts (21), and washers (22).

3. Connect fuel hose (13) to elbow (11).

4. Connect fuel hose (14) to elbow (15).

5. Install elbow (18) into adapter (20). Connect fuel hose (17) to elbow.

6. Install fuel module front plate (1) onto enclosure (2) using four screws (3), lockwashers (4), washers (5), and two screws (6).

7. Connect two fuel hoses (10) to rear of bulkhead fittings (7).

8. Connect electrical cables to rear of feed-thru studs (9) and secure using stud nuts and washers.

9. Install electrical connector (8) into hole in front plate (1).

10. Install fuel module assembly (Task 4-30).

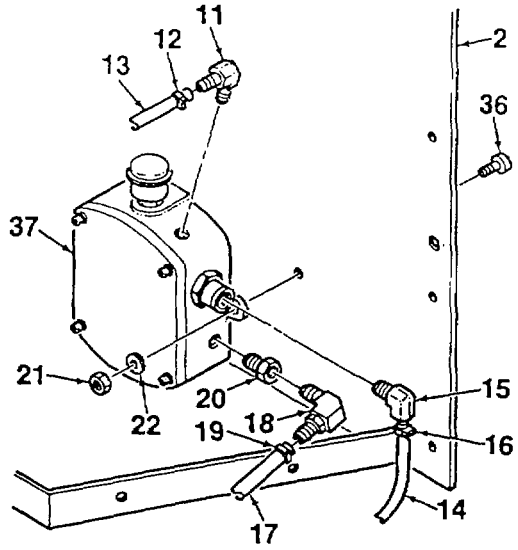

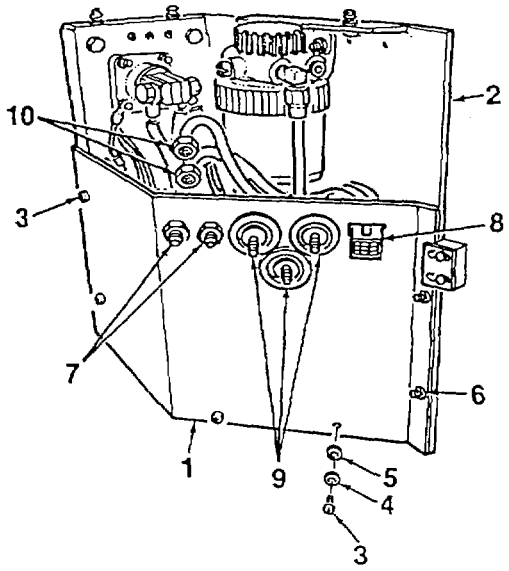

Figure 4-23. Float Valve Housing (Sheet 4 of 4)

4-34. NATO RECEPTACLE MAINTENANCE

This task covers inspection and repair.

INITIAL SETUP

Tools:
Shop Equipment, Automotive Maintenance and Repair (Item 1, App. B)

Equipment Condition:
APU Shut Down
NATO Plug Disconnected

A. REMOVAL

WARNING

Disconnect electrical cable from NATO receptacle before performing any maintenance on the fuel module. Failure to do so can result in electrical shock.

NOTE

Discard and replace all lockwashers and locknuts when removed.

1. Disconnect NATO plug from fuel module receptacle. Disconnect vehicle fuel supply hose from quick disconnect fitting.

2. Open top rear cover on enclosure by turning latches.

3. Slide fuel module cover latches (3, Figure 4-24) back to disengage, and remove fuel module cover (1) from enclosure (2).

4. Remove cover latches (3) and locking screws only if replacement is required.

5. Tag negative electrical wire (4). Disconnect wire from NATO receptacle (5) by removing bolt (6) and lockwasher (7).

6. Tag positive electrical wires (8, 9). Disconnect wires from NATO receptacle (5) by removing bolt (10) and lockwasher (11).

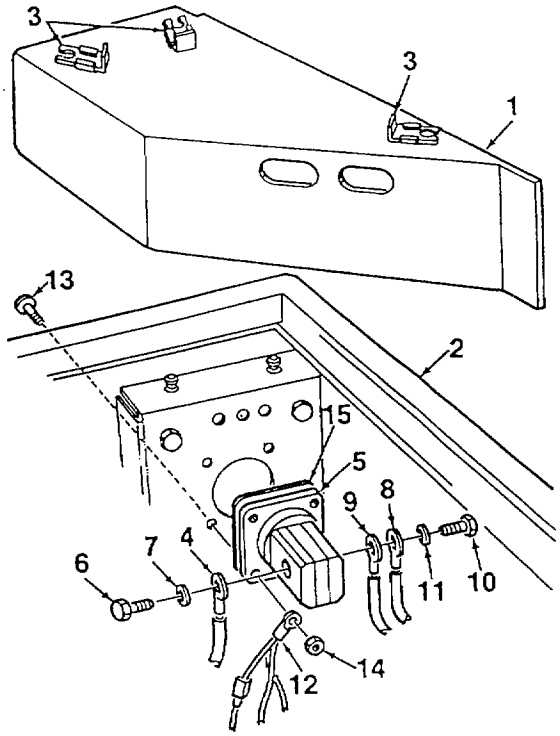

Figure 4-24. NATO Receptacle

4-34. NATO RECEPTACLE MAINTENANCE

7. Tag ground electrical lug (12). Remove NATO receptacle (5) from fuel module by removing screws (13) and nuts (14). Remove gasket (15).

B. INSPECTION.

1. Inspect electrical wiring for cuts, abrasions, and bare wire. Check wiring insulation for damage.

2. Inspect NATO receptacle for corrosion or other obvious damage. Check for evidence of electrical short.

3. Inspect NATO receptacle for bent, broken, missing, or corroded electrical contactors. Ensure all components are securely fastened.

4. Inspect receptacle gasket for cuts, tears, deformation, deterioration, or permanent set. Replace as required.

C. INSTALLATION.

1. Install NATO receptacle (5, Figure 4-24) and gasket (15) into fuel module using screws (13) and nuts (14). Ground electrical lug (12) is secured by the lower left hand screw and nut.

2. Connect positive electrical wires (8, 9) to NATO receptacle (5) using bolt (10) and lockwasher (11).

3. Connect negative electrical wire (4) to NATO receptacle (5) using bolt (6) and lockwasher (7).

4. If removed, install cover latches (3) and locking screws.

5. Mate fuel module cover (1) to enclosure (2). Lock in place by engaging cover latches (3).

6. Close top rear cover and lock using latches.

4-35. ELECTRICAL CONTACTOR MAINTENANCE

This task covers inspection and repair.

INITIAL SETUP

Tools:
Shop Equipment, Automotive Maintenance and Repair (Item 1, App. B)

Equipment Condition:
Fuel Module Removed (Para. 4-30)

Parts/Materials:
Adhesive, Silicon (Item 2, App. E)

A. REMOVAL

NOTE

Discard and replace all lockwashers and locknuts when removed.

1. Remove fuel module front plate (1, Figure 4-25) from enclosure (2) by removing four screws (3), lockwashers (4), washers (5), and two screws (6).
2. Tag and disconnect two fuel hoses (10) from rear of bulkhead fittings (7).
3. Disengage electrical connector (8) from front plate (1).
4. Tag and disconnect electrical cables from rear of feed-thru studs (9) by removing stud nuts and washers.
5. Tag electrical wires (10, 11, 12, 13). Remove wires from electrical contactor (22) by removing nuts (14), lockwashers (15), and washers (16).
6. Tag electrical wires (17, 18). Remove wires from contactor (22) by removing nuts (19), lockwashers (20), and washers (21).
7. Remove contactor (22) and rain guard plate (26) from fuel module by removing screws (23), washers (24), and locknuts (25).

B. INSPECTION.

1. Inspect electrical wiring for cuts, abrasions, and bare wire. Check wiring insulation for damage.
2. Inspect contactor for corrosion or other obvious damage. Check for evidence of electrical short.

4-35. ELECTRICAL CONTACTOR MAINTENANCE

C. INSTALLATION.

1. Apply silicon adhesive to back mounting surface of rain guard plate (26, Figure 4-25). Install electrical contactor (22) and plate onto fuel module using screws (23), washers (24), and locknuts (25).

2. Connect electrical wires (17, 18) to electrical contactor (22) using nuts (19), lockwashers (20), and washers (21). Wire (17) is installed on the left contactor stud, wire (18) on the right stud.

3. Connect electrical wires (10, 11, 12, 13) to contactor (22) using nuts (14), lockwashers (15), and washers (16). Wires (10, 12) are installed on the left contactor stud, wires (11, 13) on the right stud.

4. Install fuel module front plate (1) onto enclosure (2) using four screws (3), lockwashers (4), washers (5), and two screws (6).

5. Connect two fuel hoses (10) to rear of bulkhead fittings (7).

6. Connect electrical cables to rear of feed-thru studs (9) and secure using stud nuts and washers.

7. Install electrical connector (8) into hole in front plate (1).

8. Install fuel module assembly (Task 4-30).

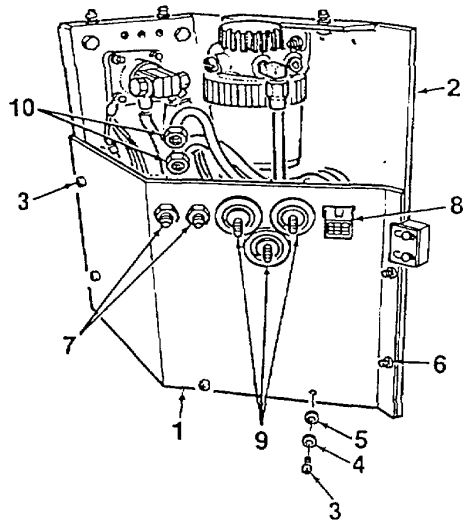

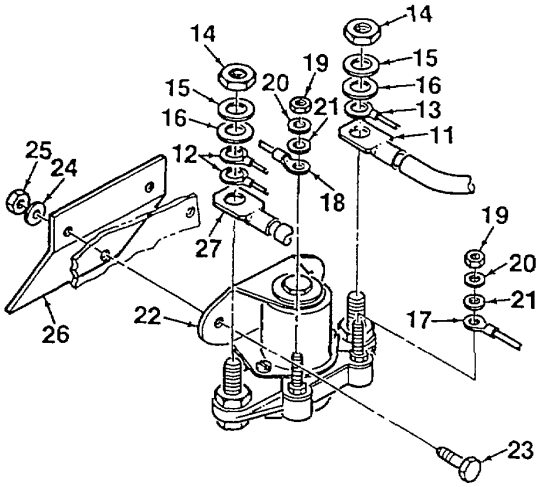

Figure 4-25. Electrical Contactor

4-36. PREHEAT MODULE ASSEMBLY MAINTENANCE

This task covers inspection and repair.

INITIAL SETUP

Tools:	Equipment Condition:
Shop Equipment, Automotive Maintenance and Repair (Item 1, App. B)	APU Shut Down NATO Plug Disconnected

A. REMOVAL.

NOTE

Discard and replace all lockwashers and locknuts when removed.

1. Open top front cover on enclosure by turning latches.

2. Disconnect two electrical connectors (1, 2, Figure 4-26) from preheat module (3).

3. Disconnect ventilation hose (5) from preheat module (3) by loosening clamp (4). It is not necessary to disconnect hose from APU enclosure air vent.

4. Remove preheat module (3) from engine by removing four bolts (6), lockwashers (7), and washers (8). Remove insulating pad (9).

5. The preheat module is a non-repairable assembly. Do not attempt to remove circuit board or electrical connectors.

B. INSPECTION.

1. Inspect electrical wiring for cuts, abrasions, and bare wire. Check wiring insulation for damage.

2. Inspect electrical connectors for bent, broken, or missing pins.

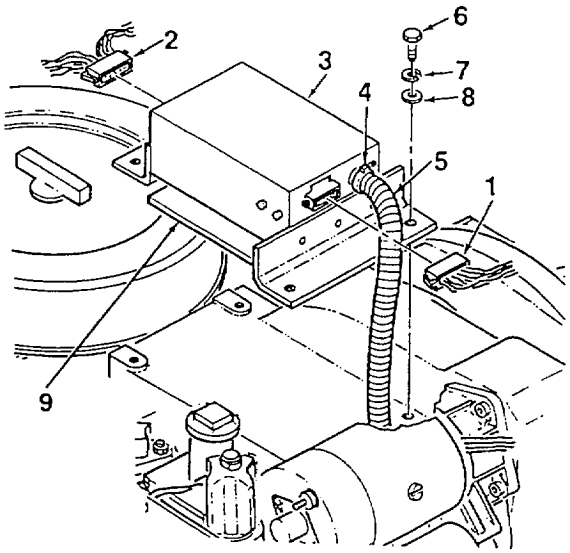

Figure 4-26. Preheat Module

4-36. PREHEAT MODULE ASSEMBLY MAINTENANCE

C. INSTALLATION.

1. Place insulating pad (9, Figure 4-26) onto bottom of preheat module (3) and mate preheat module to engine. Secure using four bolts (6), lockwashers (7), and washers (8).

2. Connect electrical connectors (1, 2) to preheat module (3).

3. Connect ventilation hose (5) to preheat module (3) and tighten clamp (4).

4. Close top front cover and lock using latches.

4-37. VOLTAGE REGULATOR MAINTENANCE

This task covers inspection and repair.

INITIAL SETUP

Tools:	Equipment Condition:
Shop Equipment, Automotive Maintenance and Repair (Item 1, App. B)	APU Shut Down NATO Plug Disconnected

A. REMOVAL.

NOTE

Discard and replace all lockwashers and locknuts when removed.

1. Open top rear cover on enclosure by turning latches.
2. Disconnect electrical connector (1, Figure 4-27) from voltage regulator (2).
3. Remove voltage regulator (2) from alternator by removing screw (3), lockwasher (4), and washer (5).
4. Remove voltage regulator (2) from fan shroud by removing screws (6), lockwashers (7), and washers (8).
5. Remove mounting bracket (9) from voltage regulator (2) by removing three screws (10), washers (11, 12), and locknuts (13).

B. INSPECTION.

1. Inspect electrical wiring for cuts, abrasions, and bare wire. Check wiring insulation for damage.
2. Inspect electrical connector for bent, broken, or missing pins.
3. Inspect voltage regulator for obvious damage.

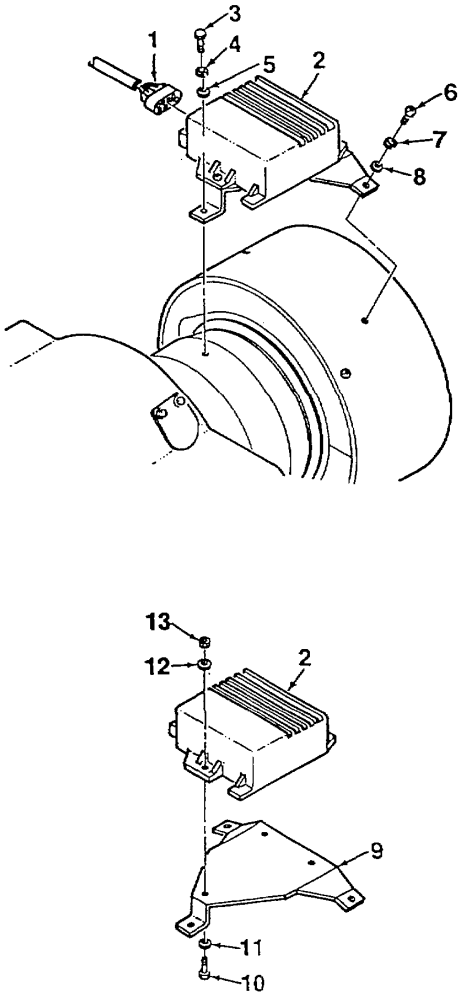

Figure 4-27. Voltage Regulator

4-37. VOLTAGE REGULATOR MAINTENANCE

C. INSTALLATION.

1. Mate mounting bracket (9, Figure 4-27) to voltage regulator (2) and secure using three screws (10), washers (11, 12), and locknuts (13).
2. Secure voltage regulator (2) to alternator using screw (3), lockwasher (4), and washer (5).
3. Secure voltage regulator (2) to fan shroud using screws (6), lockwashers (7), and washers (8).
4. Connect electrical connector (1) to voltage regulator (2).
5. Close top rear cover and lock using latches.

4-38. OIL COOLER HOSE ASSEMBLY MAINTENANCE

This task covers inspection and repair.

INITIAL SETUP

Tools:
Shop Equipment, Automotive Maintenance and Repair (Item 1, App. B)

Equipment Condition:
Engine Oil Drained (App. F)

A. REMOVAL.

NOTE

Have a supply of clean rags available to soak up oil. Place rags inside APU enclosure, below fittings, before disconnecting hose assemblies.

NOTE

Discard and replace all lockwashers and locknuts when removed.

1. Open oil filter access door (1, Figure 4-28) by turning door latches.

2. Remove air outlet header (2) from APU enclosure by removing six screws (3), lockwashers (4), and washers (5).

3. Disconnect oil cooler hose assemblies (9, 10) from elbows (6, 7) and oil cooler (8). Remove elbows (6, 7) from oil filter adapter only if replacement is required.

B. INSPECTION.

1. Inspect oil cooler hoses for punctures, cuts, tears, or evidence of corrosion or leakage. Ensure hose fittings are securely attached.

2. Inspect elbows and oil cooler fittings for crossed, stripped, or flattened threads.

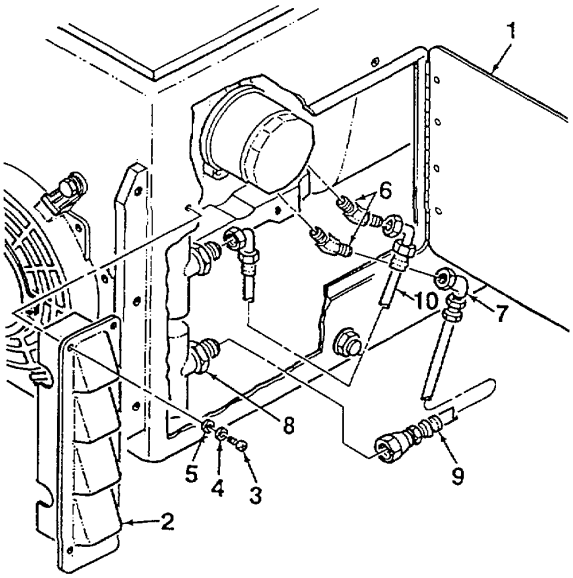

Figure 4-28. Oil Cooler Hoses

4-38. OIL COOLER HOSE ASSEMBLY MAINTENANCE

3. Inspect oil cooler for obvious damage. Inspect for evidence of leakage or corrosion. Refer to next higher maintenance level for replacement of cooler.

C. INSTALLATION.

1. Install elbows (6, 7, Figure 4-28). See figure for correct orientation.

2. Connect oil cooler hose assemblies (9, 10) to elbows (6, 7) and oil cooler (8).

3. Service engine oil in accordance with Appendix F. Inspect oil cooler hoses for leaks. Secure as required.

4. Install air outlet header (2) onto APU enclosure using six screws (3), lockwashers (4), and washers (5).

5. Close oil filter access door (1) and lock door latches.

4-39. OIL COOLER FAN MAINTENANCE

This task covers inspection and repair.

INITIAL SETUP

Tools:
Shop Equipment, Automotive Maintenance and Repair (Item 1, App. B)

Equipment Condition:
Nosepiece Assembly Removed (Para. 4-15)

A. REMOVAL.

NOTE

Discard and replace all lockwashers and locknuts when removed.

1. Disconnect oil cooler fan electrical cable (1, Figure 4-29).

2. Remove oil cooler fan (2) from APU enclosure (3) by removing four screws (4), lockwashers (5), and washers (6).

3. Use care to ensure that mounting clips (7) do not separate from fan and become lost.

4. Remove electrical shielding (8) from fan cable only if replacement is required.

B. INSPECTION.

1. Inspect oil cooler fan for obvious damage. Inspect for signs of electrical short. Ensure fan blades spin smoothly, free of binding or sticking.

2. Inspect electrical cable for cuts, abrasions, and bare wire. Inspect insulation for damage. Ensure cable is securely connected to fan.

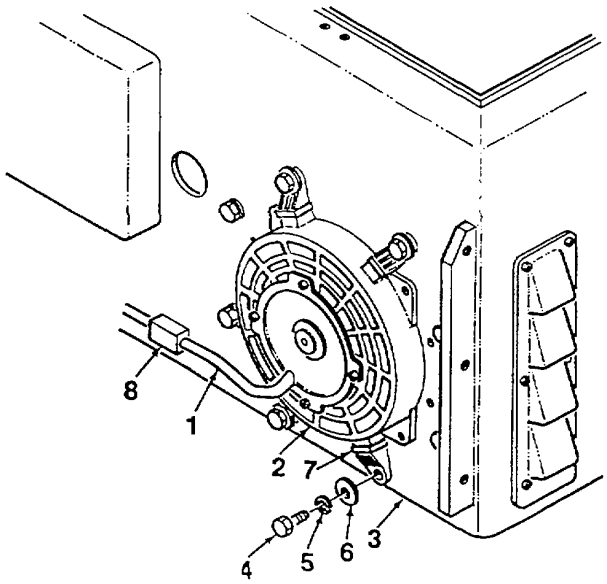

Figure 4-29. Oil Cooler Fan

4-39. OIL COOLER FAN MAINTENANCE

C. TESTING.

Connect a 24VDC power source to the fan electrical terminals. Check that the fan blade spins. Replace fan if blade does not spin.

D. INSTALLATION.

1. Mate oil cooler fan (2, Figure 4-29) to APU enclosure (3). Secure using four screws (4), lockwashers (5), and washers (6).

2. Feed electrical cable (1) through hole in APU enclosure (3). Connect electrical cable and ty-wrap to secure.

NOTE

Ensure that electrical shielding (8) is replaced in original location (close to the fan) on fan cable.

3. Install electrical shielding (8) on fan cable.

4. Install nosepiece assembly (Para. 4-15).

4-40. EXTERNAL MUFFLER MAINTENANCE

This task covers inspection and repair.

INITIAL SETUP

Tools:
Shop Equipment, Automotive Maintenance and Repair (Item 1, App. B)

Equipment Condition:
APU Shut Down and Cold
NATO Plug Disconnected

Parts/Materials:
Adhesive, Silicon (Item 2, App. E)
Anti-Seize Compound (Item 3, App. E)

A. REMOVAL.

WARNING

External muffler and cover may be hot. Use caution when handling to prevent bums. Allow time for parts to cool before removing.

NOTE

Discard and replace all lockwashers and locknuts when removed.

1. Remove muffler cover (1, Figure 4-30) from housing (2) by removing four screws (3), lockwashers (4), washers (5), and spacers (6).

2. Remove external muffler (8) from exhaust assembly nuts by removing two screws (9), lockwashers (10), and washers (11).

3. Remove rain cap (12) from muffler (8) by loosening clamp (13).

4. If replacement is required, remove housing (2) from APU enclosure by removing two screws (14), lockwashers (15), and washers (16). These screws also secure the internal exhaust assembly to the APU enclosure.

B. INSPECTION.

1. Inspect muffler cover and housing for dents, cracks, warping, or other damage. Inspect painted surfaces for chips, scratches, bare metal, roughness, or corrosion.

2. Inspect silicon seal (7) for damage. Ensure secure attachment. Replace as required using silicon adhesive.

4-40. EXTERNAL MUFFLER MAINTENANCE

3. Inspect housing gasket for damage. Ensure secure attachment. Replace as required using silicon adhesive.

4. Inspect external muffler for clogs, holes, cracks, or other damage. Check for corrosion.

C. INSTALLATION.

1. Apply anti-seize compound to threads of two screws (14, Figure 4-30). Secure housing (2) to APU enclosure using screws (14), lockwashers (15), and washers (16). These screws also secure internal exhaust assembly to the inside of the APU enclosure.

2. Fit rain cap (12) and clamp (13) onto external muffler (8). Secure by tightening clamp.

3. Mate external muffler (8) to exhaust assembly air duct.

4. Apply anti-seize compound to threads of two screws (9). Secure muffler (8) using screws (9), lockwashers (10), and washers (11).

5. Apply anti-seize compound to threads of four screws (3). Install muffler cover (1) using screws (3), lockwashers (4), washers (5), and spacers (6).

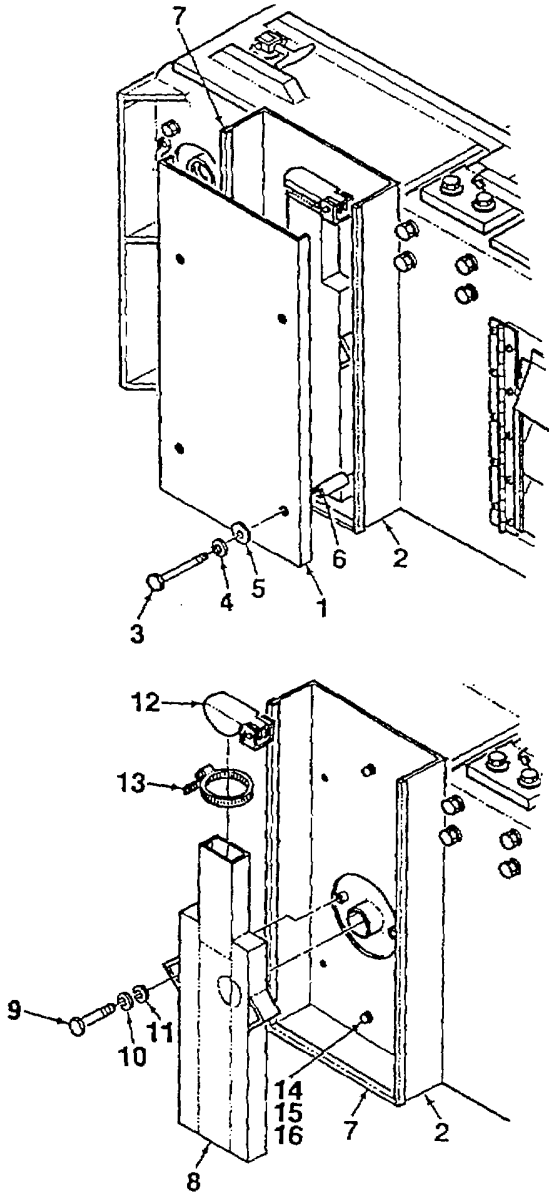

Figure 4-30. External Muffler

4-41. INTERNAL EXHAUST ASSEMBLY MAINTENANCE

This task covers inspection and repair.

INITIAL SETUP

Tools:
Shop Equipment, Automotive Maintenance and Repair (Item 1, App. B)

Parts/Materials:
Adhesive, Silicon (Item 2, App. E)
Anti-Seize Compound (Item 3, App. E)
Safety Wire (Item 13, App. E)

Equipment Condition:
External Muffler Removed (Para. 4-40)
In-Line Fuel Filter Detached From Mounting Bracket (Para. 4-44)
APU Cover Assembly Removed (Para. 4-12)
Fuel Module Removed (Para. 4-30)

A. REMOVAL.

WARNING

Internal exhaust assembly may be hot. Use caution when handling to prevent bums. Allow time for parts to cool before removing.

NOTE

Discard and replace all lockwashers and locknuts when removed.

1. Disconnect exhaust inlet hose (1, Figure 4-31) from fan shroud (2) by loosening clamp (3).
2. Disconnect flexible exhaust hose (4) from adapter pipe (6) by loosening clamp (5).
3. Remove exhaust assembly (11) from APU enclosure by removing two screws (12), lockwashers (13), and washers (14). These screws also secure external muffler housing (16).
4. Remove muffler blanket from exhaust assembly (11).
5. Remove and discard safety wire that secures insulating wrap on exhaust pipe (10) and adapter pipe (6). Remove insulating wrap.
6. Loosen hose clamp (7) and disconnect engine exhaust hose from adapter pipe (6).
7. Disconnect adapter pipe (6) from exhaust pipe (5) by removing screws (8) and lockwashers (9).

B. INSPECTION.

1. Inspect exhaust assembly for holes, dents, cracks, warping, or other damage. Inspect for corrosion.

4-41. INTERNAL EXHAUST ASSEMBLY MAINTENANCE

2. Inspect muffler blanket for damage. Check security of attachment.

3. Inspect silicon seal (15) on housing (16) for damage. Ensure secure attachment. Replace as required using silicon adhesive.

4. Inspect housing gasket (17) for damage. Ensure secure attachment. Replace as required using silicon adhesive.

C. INSTALLATION.

1. Install muffler blanket onto internal exhaust assembly (7, Figure 4-31).

2. Mate adapter pipe (6) to exhaust pipe (5) and secure using screws (8) and lockwashers (9).

3. Wrap insulating wrap around exhaust pipe (5) and adapter pipe (6). Secure using safety wire.

4. Apply anti-seize compound to threads of two screws (12). Install exhaust assembly (11) and housing (16) to APU enclosure using screws (12), lockwashers (13), and washers (14).

5. Connect exhaust inlet hose (1) to fan shroud hose (2) and tighten clamp (3).

6. Connect flexible exhaust hose (4) to adapter pipe (6). Secure using hose clamp (5).

7. Install external muffler (Para. 4-40). Attach inline fuel filter to mounting bracket (Para. 4-44).

8. Install fuel module (Para. 4-30). Install APU cover assembly (Para. 4-12).

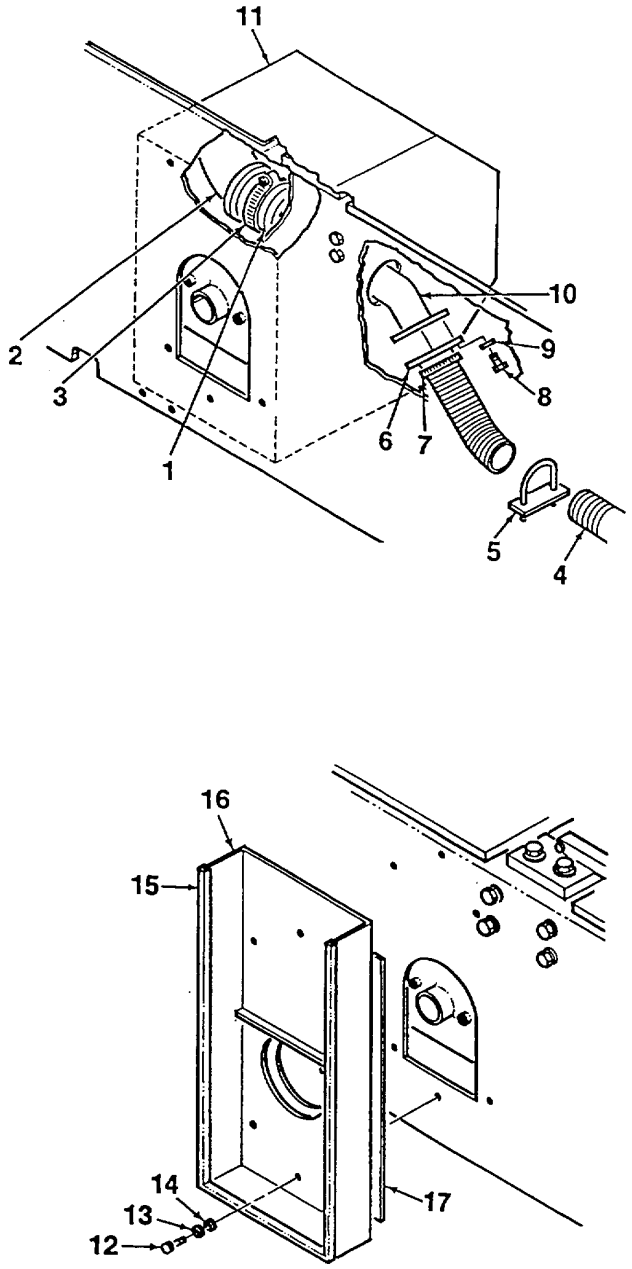

Figure 4-31. Exhaust Assembly

4-42. ENGINE EXHAUST DUCT ASSEMBLY MAINTENANCE

This task covers inspection and repair.

INITIAL SETUP

Tools:
Shop Equipment, Automotive Maintenance and Repair (Item 1, App. B)

Equipment Condition:
Air Filter and Filter Base Removed (Para. 4-43)

Parts/Materials:
Adhesive, Silicon (Item 2, App. E)

A. REMOVAL.

WARNING

Make sure that electrical cable is disconnected from NATO receptacle before performing any maintenance action. Failure to do so can result in electrical shock.

NOTE

Discard and replace all lockwashers and locknuts when removed.

1. Remove screw (10, Figure 432), washer (11), and lockwasher (12) and release engine exhaust bellows (1) from air duct (2, located in valve access door).

2. If replacement is required, remove exhaust bellows (1) from air outlet duct (3) by drilling out rivets.

3. Remove two bolts (4), lockwashers (5), and washers (6).

4. Remove air outlet duct (3) by removing two bolts (7), lockwashers (8), and washers (9).

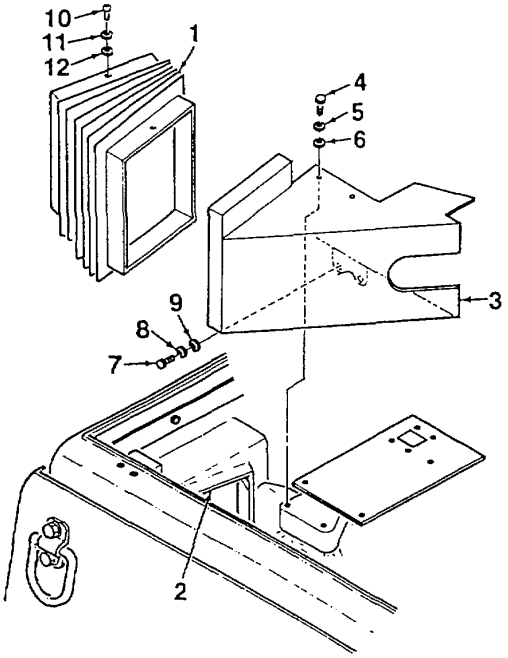

Figure 4-32. Exhaust Duct

4-42. ENGINE EXHAUST DUCT ASSEMBLY MAINTENANCE

B. INSPECTION.

1. Inspect exhaust bellows for cuts, tears, or other damage. Ensure bellows material is sound.

2. Inspect air outlet duct for holes, dents, cracks, warping, or other damage. Inspect for corrosion.

C. INSTALLATION.

1. Remove old silicon adhesive from air outlet duct (3, Figure 4-32). Make sure that mating surfaces are clean.

2. Fit air outlet duct (3) in place around cylinder head. Secure using two bolts (7), lockwashers (8), and washers (9).

3. Install two bolts (4), lockwashers (5), and washers (6). Apply a silicon bead to exposed edges of air outlet duct (3) to seal junction of duct and cylinder head.

4. Apply a thin layer of silicon to lip of air outlet duct (3) where it mates with exhaust bellows (1).

5. Install exhaust bellows (1) onto air outlet duct (3) using new rivets.

6. Mate exhaust bellows (1) to air duct (2, located in valve access door). Secure using screw (10), washer (11), and lockwasher (12).

7. Install engine air filter and filter base (Para. 4-43).

4-43. ENGINE AIR FILTER MAINTENANCE

This task covers inspection and repair.

INITIAL SETUP

Tools:
Shop Equipment, Automotive Maintenance and Repair (Item 1, App. B)

Equipment Condition:
APU Shut Down
NATO Plug Disconnected

Parts/Materials:
Adhesive, Loctite (Item 1, App. E)

A. REMOVAL.

WARNING

Make sure that electrical cable is disconnected from NATO receptacle before performing any maintenance action. Failure to do so can result in electrical shock.

NOTE

Discard and replace all lockwashers and locknuts when removed.

1. Open top front cover on APU enclosure by turning latches.
2. Disconnect engine air hose (1, Figure 4-33) from air duct on inside wall of APU enclosure.
3. Release filter cover (2) from filter base (4) by unscrewing wing screw assembly (5).
4. Remove filter cover (2) and filter (8) from filter base (4). Remove wing screw assembly (5), washer (6), and retainer (7) only if replacement is required.
5. Remove filter base (4), backing plate (14), and gasket (18) by removing nut (9), three bolts (11), and three lockwashers (12). Remove set screw (13).
6. If replacement of intake guard (10) is required, remove filter base (4) from backing plate (14) by removing three screws (15), six washers (16), and three nuts (17).

B. INSPECTION.

1. Inspect engine air hose for cuts, tears, or other damage. Replace hose as required by loosening clamp (3).
2. Inspect air filter cover and base for dents, cracks, warping, or other damage. Inspect for corrosion.

3. Inspect intake guard for damage. Ensure mesh screen is intact. Replace as required.

C. INSTALLATION.

NOTE

Screws (15, Figure 4-33) are installed from different sides of the filter base. Screw in rear hole mounts from the top of the filter base. Two screws in front holes mount from below the filter base.

1. Mate filter base (4) to backing plate (14). Secure using three screws (15), six washers (16), and three nuts (17).

2. Apply loctite adhesive to threads of bolts (11) and both ends of setscrew (13). Install filter base (4) and backing plate (14) using three bolts (11) and lockwashers (12). Install setscrew (13) and nut (9).

3. If removed, install wing screw assembly (5) and washer (6) onto filter cover (2) using retainer (7).

4. Install filter (8) and filter cover (2) onto base (4). Ensure filter is properly seated.

5. Secure filter cover (2) to base (4) by screwing in wing screw assembly (5).

6. Connect engine air hose (1) to filter cover (2) and enclosure duct. Secure by tightening clamps (3).

7. Close top front cover and lock using latches.

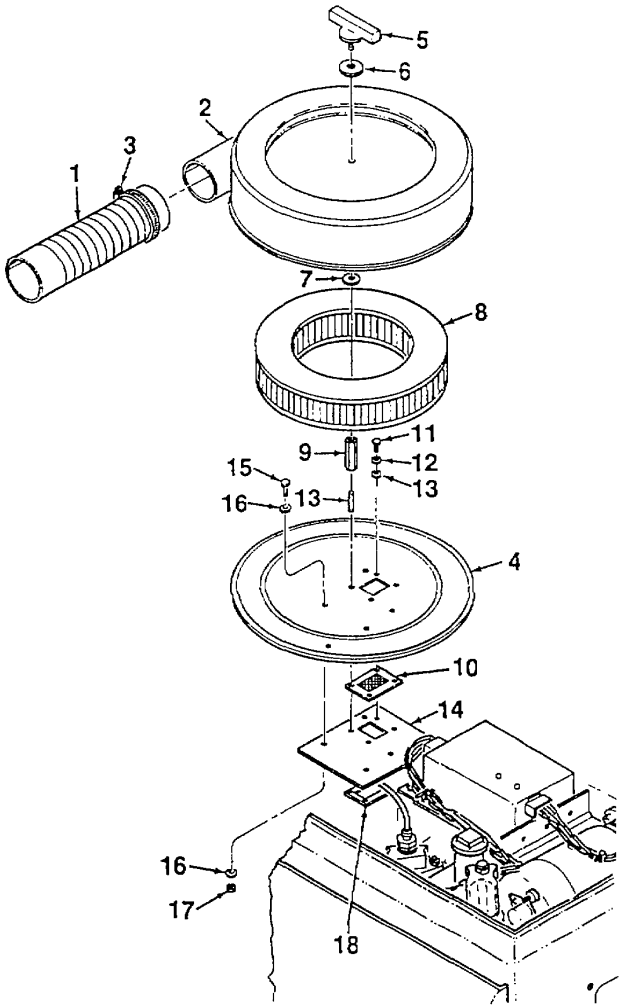

Figure 4-33. Engine Air Filter

4-44. FUEL FILTER (IN-LINE) MAINTENANCE

This task covers removal, inspection, and installation

INITIAL SETUP

Tools:
Shop Equipment, Automotive Maintenance and Repair (Item 1, App. B)

Parts/Materials:
Adhesive, Loctite (Item 1, App. E)

Equipment Condition:
APU Shut Down
NATO Plug Disconnected

A. REMOVAL.

WARNING

Make sure that electrical cable is disconnected from NATO receptacle before performing any maintenance action. Failure to do so can result in electrical shock.

NOTE

Discard and replace all lockwashers and locknuts when removed.

1. Open top rear cover on APU enclosure by turning latches.

2. Loosen clamps (4, Figure 4-34) and disconnect fuel hoses (1, 2) from fuel filter (5). Separate fuel hose (3), if required, by cutting tie-wraps.

3. Remove fuel filter (5) from filter bracket (7) by loosening clamp (6).

4. Remove filter bracket (7) from mounting bracket (8) by removing screw (9), washers (10), and locknut (11).

5. Remove mounting bracket (8) from flywheel housing by removing bolt (12), lockwasher (13), and washer (14).

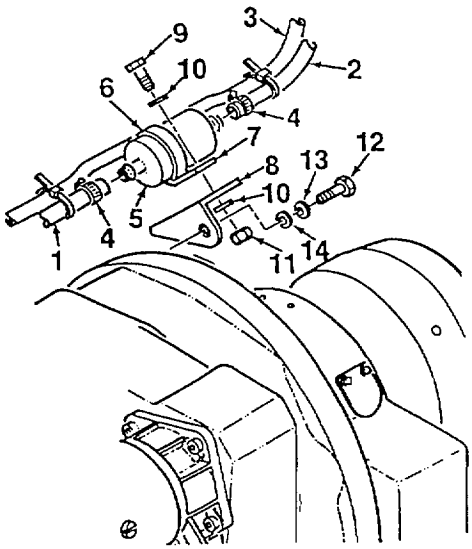

Figure 4-34. In-Line Fuel Filter

4-44. FUEL FILTER (IN-LINE) MAINTENANCE

B. INSPECTION.

1. Inspect fuel hoses for punctures, cuts, tears, deterioration, or other damage. Check for evidence of fluid leakage.

2. Inspect fuel filter for dents, cracks, scratches, or other damage. Inspect for corrosion and evidence of leakage.

C. INSTALLATION.

1. Apply loctite to threads of bolt (12, Figure 4-34). Install mounting bracket (8) to flywheel housing using bolt (12), lockwasher (13), and washer (14).

2. Mate fuel filter bracket (7) to mounting bracket (8) and secure using screw (9), washers (10), and locknut (11).

3. Install fuel filter (5) into bracket (7), ensuring proper positioning. Secure by tightening clamp (6).

4. Connect fuel hoses (1, 2) to fuel filter (5) and tighten clamps (4).

5. Close top rear cover and lock using latches.

4-45. ENGINE START SOLENOID / MANUAL START SWITCH MAINTENANCE

This task covers removal, inspection, installation, and adjustment

INITIAL SETUP

Tools:
Shop Equipment, Automotive Maintenance and Repair (Item 1, App. B)

Parts/Materials:
Adhesive, Loctite (Item 1, App. E)

Equipment Condition:
APU Shut Down
NATO Plug Disconnected

A. REMOVAL.

WARNING

Make sure that electrical cable is disconnected from NATO receptacle before performing any maintenance action. Failure to do so can result in electrical shock.

NOTE

Discard and replace all lockwashers and locknuts when removed.

1. Open top front cover on APU enclosure by turning latches.
2. Disconnect solenoid electrical connector (1, Figure 4-35).
3. Open oil filter access door. Depress top of solenoid (2). Disengage and remove clip (3) to release solenoid from engine throttle control.
4. Remove solenoid (2) from mounting bracket (4) by removing two screws (5), lockwashers (6), and nuts (7).
5. Tag and disconnect manual start switch electrical connector (8).

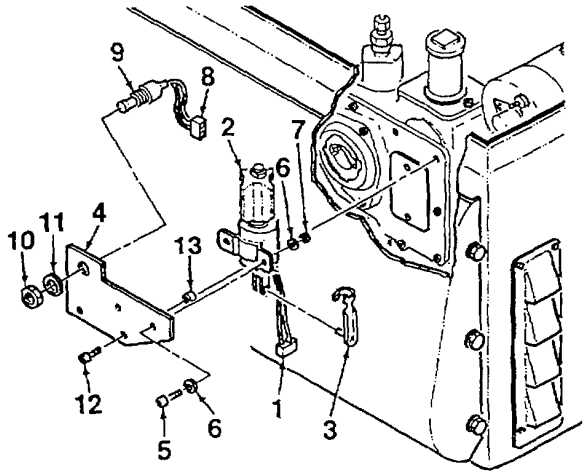

Figure 4-35. Solenoid and Start Switch

6. Remove manual start switch (9) from mounting bracket (4) by removing nut (10) and star washer (11).

7. Remove mounting bracket (4) from engine by removing two screws (12) and spacers (13).

B. INSPECTION.

1. Inspect electrical wires for cuts, abrasions, or bare wire. Inspect wire insulation for damage. Ensure wiring is securely attached to solenoid and start switch.

2. Inspect solenoid for dents, cracks, scratches, or other damage. Inspect for corrosion.

C. INSTALLATION.

1. Install mounting bracket (4, Figure 4-35) onto engine using two screws (12) and spacers (13).

2. Install manual start switch (9) onto mounting bracket (4) using nut (10) and star washer (11).

3. Mate solenoid (2) to mounting bracket (4). Secure by loosely installing two screws (5), lockwashers (6), and nuts (7). Do not tighten at this time.

4. Thread solenoid yoke approximately half-way onto solenoid shaft. Mate yoke to engine throttle control. Thread yoke up or down as required to ensure proper mating.

5. Once mated, insert pin on clip (3) into engine throttle control and solenoid (2). Depress top of solenoid and snap clip into place to secure. Adjust solenoid as required in accordance with paragraph D.

6. Connect solenoid and manual start switch electrical connectors (1, 9).

7. Close top front cover and lock using latches.

D. ADJUSTMENT.

1. Manually operate solenoid (2, Figure 4-35) to ensure that linkage moves freely. Tighten screws (5) and nuts (7) to securely fasten solenoid to mounting bracket (4).

2. Depress top of solenoid (2) until it reaches maximum travel length and stops. Throttle lever shall be 1/32 inch from the mechanical stop on engine.

3. Adjust yoke as required to obtain proper clearance. Tighten yoke nut to secure yoke in place once clearance has been achieved.

4-46. OIL DRAIN ASSEMBLY MAINTENANCE

This task covers removal, inspection, and installation

INITIAL SETUP

Tools:
Shop Equipment, Automotive Maintenance and Repair (Item 1, App. B)
Container for catching fluids

Equipment Condition:
APU Shut Down
NATO Plug Disconnected

A. REMOVAL.

1. Open oil filter access door by turning door latches.

2. Place a suitable container beneath drain plug (2, Figure 4-36). Drain engine oil by removing plug and turning oil drain valve handle (5).

3. Remove nut (3) and washer (4) from oil drain bulkhead fitting (1).

4. To remove oil hose and attaching fittings from engine, engine/alternator assembly must be removed from APU enclosure. Refer to Direct Support Maintenance (Para. 5-7).

B. INSPECTION.

1. Inspect oil drain hose for punctures, cuts, tears, deterioration, or other damage. Check that hose swivel fittings are securely attached.

2. Inspect all fittings for crossed, stripped, flattened, or damaged threads.

3. Inspect base of APU enclosure for evidence of fluid leakage.

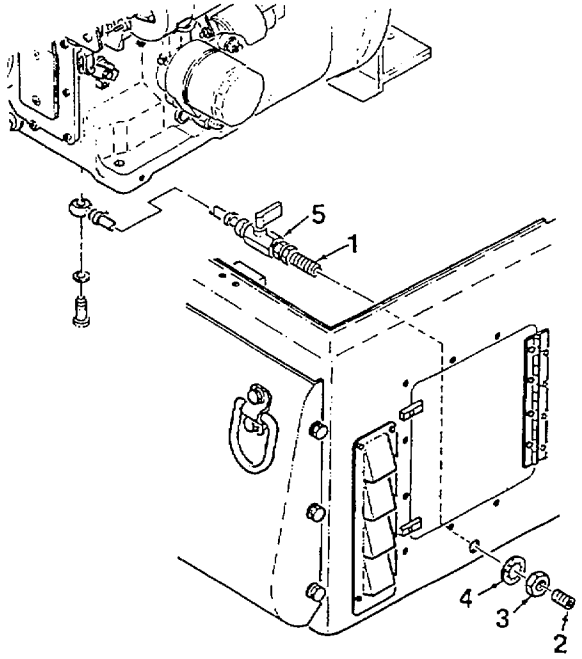

Figure 4-36. Oil Drain Assembly

4-46. OIL DRAIN ASSEMBLY MAINTENANCE

C. INSTALLATION.

1. Insert oil drain assembly bulkhead fitting (1, Figure 4-36) through hole in enclosure. Secure using nut (3) and washer (4).

2. Install allen head plug (2) and close oil drain valve by turning handle.

3. Service engine oil (Para. 4-1). Check oil drain components for leakage and tighten as required.

4-47. VALVE CLEARANCE ADJUSTMENT

This task covers adjustment of the engine valves/rockers

INITIAL SETUP

Tools:
Shop Equipment, Automotive Maintenance and Repair (Item 1, App. B)

Equipment Condition:
APU Shut Down and Cold
NATO Plug Disconnected

A. ADJUSTMENT.

NOTE

Discard and replace all lockwashers and locknuts when removed.

1. Open top front cover on APU enclosure by turning latches.

2. Disconnect engine exhaust bellows (1, Figure 4-37) from rear of valve access door (2) by removing screw (3), lockwasher (4), and washer (5). Disconnect air hose (6) only if replacement is required.

3. Open valve access door (2) by turning door latches.

4. Place rags below rocker cover to capture fluids. Wipe spills with a clean rag.

NOTE

When removing rocker cover (7), tilt back towards you to prevent capture oil from spilling inside APU enclosure.

5. Remove rocker cover (7) by removing screws (8). Dislodge washers (9) from cover by tapping lightly with tip of screwdriver. Discard washers and gasket (10).

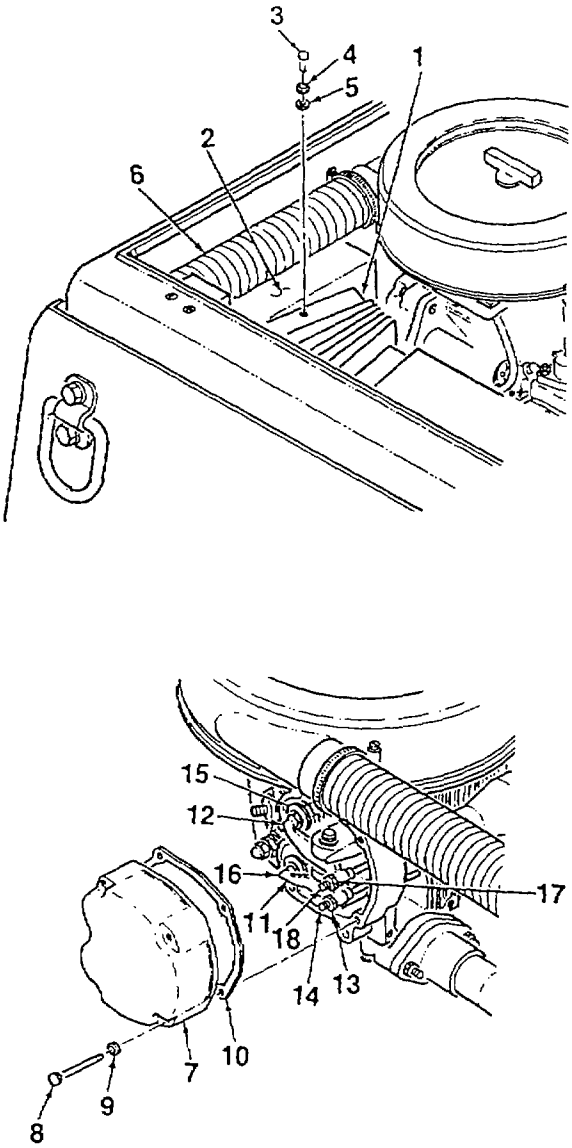

Figure 4-37. Valve Clearance Adjustment (Sheet 1 of 2)

4-47. VALVE CLEARANCE ADJUSTMENT

6. Insert manual crank handle into handle access hole in nose piece and connect to engine crankshaft.

7. Turn crankshaft slowly until intake valve begins to open, then rotate handle 180 degrees. Top dead center is reached when crank drive pin (19) is in horizontal position and maximum clearance occurs between rocker arm and exhaust valve.

8. Using a feeler gauge, check clearance between rocker arm (11) and exhaust valve (16). Clearance shall be 0.1 mm (.004 in.).

9. If clearance between rocker arm (11) and exhaust valve (16) requires adjustment, loosen rocker arm locknut (13) and rotate rocker screw (14). Tighten locknut and recheck clearance.

10. Using handle, turn crankshaft approximately 1/4 turn in direction of rotation. Crank drive pin (19) shall be in vertical position.

11. Using a feeler gauge, check clearance between rocker arm (12) and inlet valve (15). Clearance shall be 0.1 mm (.004 in.).

12. If clearance between rocker arm (12) and inlet valve (15) requires adjustment, loosen rocker arm locknut (17) and rotate rocker screw (18). Tighten locknut and recheck clearance.

13. Mate new cover gasket (10) to engine cylinder head. Install rocker cover (74) and secure using nut (5) and washer (6).

14. Close valve access door (2) and lock by turning door latches.

15. Mate engine exhaust bellows (1) to rear of valve access door (2). Connect hose (3).

16. Close top front cover and secure using latches.

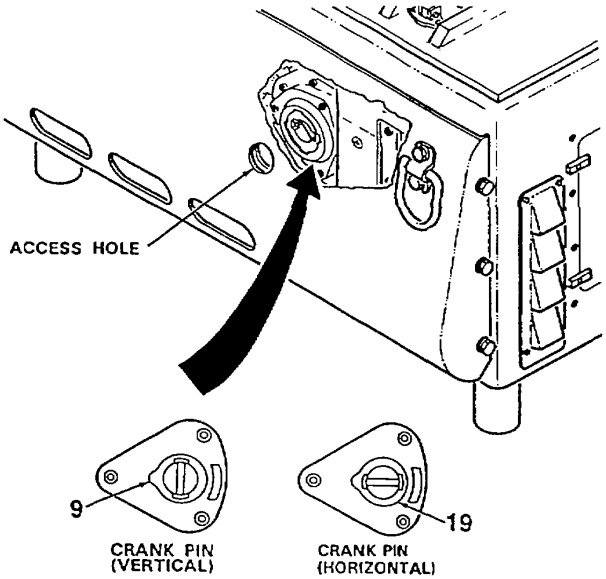

Figure 4-37. Valve Clearance Adjustment (Sheet 2 of 2)

4-48. FUEL INJECTOR MAINTENANCE

This task covers removal, inspection, and installation

INITIAL SETUP

Tools
Shop Equipment, Automotive Maintenance and Repair (Item 1, App. B)

Equipment Condition:
APU Shut Down
NATO Plug Disconnected

A. REMOVAL.

NOTE

Discard and replace all lockwashers and locknuts when removed.

1. Open top front cover on APU enclosure by turning latches.

2. Disconnect engine exhaust bellows (1, Figure 4-38) from rear of valve access door (2) by removing screw (3), lockwasher (4), and washer (5). Disconnect air hose (6) only if replacement is required.

3. Open valve access door (2) by turning door latches.

4. Disconnect fuel pipe (13) from fuel injector (14).

5. Disconnect fuel pipe (9) from fuel injector (14) by removing banjo bolt (10) and washers (11, 12).

6. Remove fuel injector flange by removing nuts (7) and washers (8).

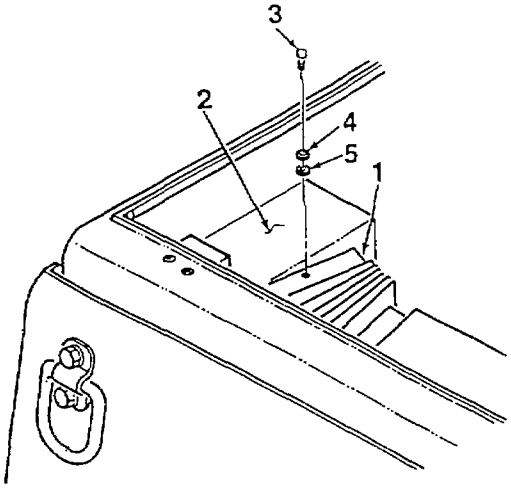

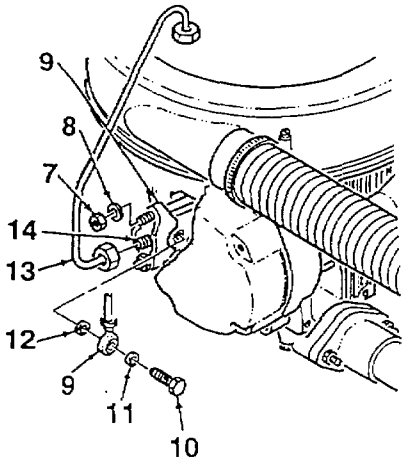

Figure 4-38. Fuel Injector (Sheet 1 of 2)

7. Remove injector (14) and gasket (15). Discard gasket.

8. Inspect injector nozzle (16) for contaminants. Check that nozzle orifice is clear (allowing a proper spray pattern). If nozzle is damaged or worn, remove and replace nozzle.

9. Remove studs (17) from cylinder head only if replacement is required.

B. INSPECTION.

1. Inspect engine fuel hoses for punctures, cuts, tears, deterioration, or other damage. Check that hose fittings are securely attached.

2. Inspect fuel injector for damage. Check for scoring or signs of excessive heat. Inspect injector orifices for clogging. Clear as required.

C. INSTALLATION.

1. If removed, install studs (17, Figure 4-38) into cylinder head.

2. Install new gasket (15) onto fuel injector (14). Install fuel pipe (9) using banjo bolt (10) and washers (11, 12).

3. Insert injector (14) into cylinder head port. Orient as shown in Figure 4-38. Install injector flange (9) and secure using nuts (7) and washers (8). Torque nuts to 15 to 17 ft-lbs (20 to 23 Nm).

4. Connect fuel pipe (13) to fuel injector (14).

5. Close valve access door (2) and lock by turning door latches. Mate engine exhaust bellows (1) to rear of door and secure using screw (3), lockwasher (4), and washer (5).

6. Close top front cover and secure using latches.

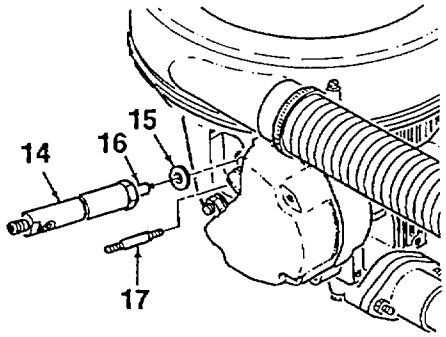

Figure 4-38. Fuel Injector (Sheet 2 of 2)

4-49. OIL LEVEL DIPSTICK MAINTENANCE

This task covers removal, inspection, and installation

INITIAL SETUP

Tools:
Shop Equipment, Automotive Maintenance and Repair (Item 1, App. B)

Equipment Condition:
APU Shut Down
NATO Plug Disconnected

A. REMOVAL.

1. Open top front cover on APU enclosure by turning latches.

2. Remove oil level dipstick (1, Figure 4-39) from engine port (2).

B. INSPECTION.

1. Inspect engine oil dipstick for damage. Check for bent or twisted level rod. Inspect for corrosion.

2. Inspect dipstick O-rings for cuts, tears, deformation, damage, or signs of deterioration. Replace as required.

3. Inspect area around oil level dipstick for evidence of leakage.

C. INSTALLATION.

1. Insert oil level dipstick (1, Figure 4-39) into engine port (2).

2. Close top front cover and secure by locking latches.

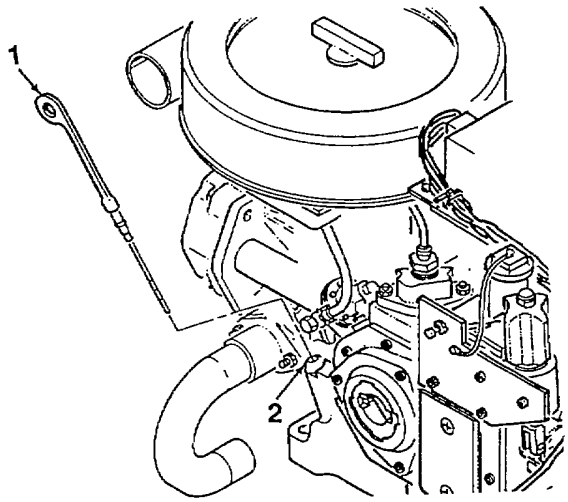

Figure 4-39. Oil Level Dipstick

4-50. OIL FILTER MAINTENANCE

This task covers removal, inspection, and installation

INITIAL SETUP

Tools:
Oil Filter Wrench (4, App. B)

Equipment Condition:
Engine Oil Drained (Para. 4-1)

A. REMOVAL.

1. Open oil filter access door by turning door latches.

2. Using oil filter wrench, remove oil filter (1, Figure 4-40) from oil filter fitting (2). Discard oil filter.

B. INSPECTION.

1. Inspect oil filter fitting for damage. Inspect for crossed, stripped, or flattened threads. Inspect valve orifice for clogging and clean as required.

2. Inspect area around oil cover for evidence of leakage.

C. INSTALLATION.

1. Apply a light coat of engine oil to oil filter gasket to ease filter installation. Install new oil filter (1, Figure 4-40) and hand tighten.

2. Service engine oil (Para. 4-1). Inspect area around oil filter for leakage and tighten as required.

3. Close oil filter access door and lock using door latches.

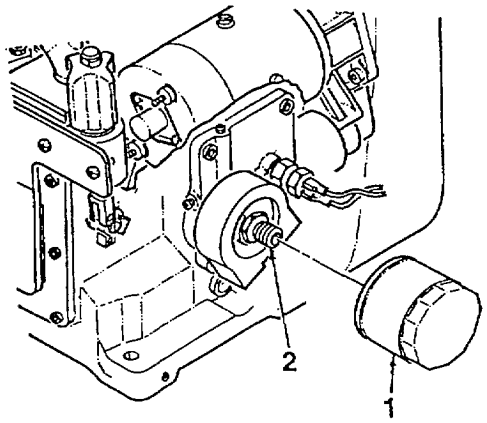

Figure 4-40. Oil Filter

4-51. OIL PRESSURE VALVE / OIL COVER MAINTENANCE

This task covers removal, inspection, and installation

INITIAL SETUP

Tools:
Shop Equipment, Automotive Maintenance and Repair (Item 1, App. B)
3/4 Inch SAE Thread Jam Nuts (2 each)

Equipment Condition:
Oil Cooler Hoses Disconnected from Oil Filter Adapter (Para. 4-38)

A. REMOVAL.

1. Open oil filter access door by turning door latches.

2. Using oil filter wrench, remove oil filter (1, Figure 4-41) from oil filter fitting (2). Discard oil filter.

3. Remove oil filter fitting (2) and filter adapter (3). Remove and discard gasket (4, on rear of adapter).

4. Install two 3/4 inch SAE thread jam nuts on oil pressure valve (5). Remove valve from oil cover (6) by wrenching jam nuts.

NOTE

Remove oil cover only if replacement of cover or gasket is required.

5. Tag and disconnect electrical wires from oil pressure switch (7). Remove switch.

6. If removal of oil cover (6) is required, you must first remove engine starter motor (Para. 4-53).

7. Remove oil cover (6) from engine crankcase by removing four screws (8) and washers (9). Remove and discard gasket (10).

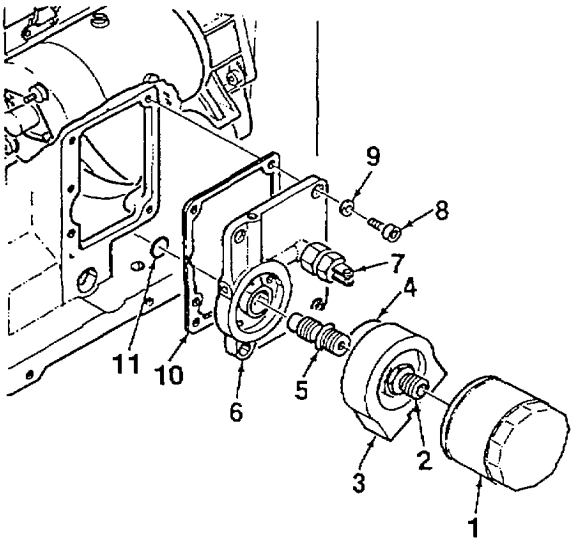

Figure 4-41. Oil Pressure Valve and Cover

4-51. OIL PRESSURE VALVE / OIL COVER MAINTENANCE

B. INSPECTION.

1. Inspect oil filter adapter and pressure valve for damage. Inspect for crossed, stripped, or flattened threads. Inspect valve orifice for clogging and clean as required.

2. Inspect area around oil cover for evidence of leakage. Inspect oil cover for cracks, scratches, or other damage. Inspect sealing surfaces for damage that will prevent proper seal.

C. INSTALLATION.

1. Apply grease to oil seal (11, Figure 4-41) and install in position on oil cover (6). Mate new cover gasket (10) to oil cover (6). Mate oil cover to engine crankcase and secure using four screws (8) and washers (9).

2. Install oil pressure valve (5) into oil cover (6).

3. Install oil pressure switch (7) and connect electrical wires.

CAUTION

Do not overtighten oil filter fitting (2). Damage to fitting and adapter (3) will result.

4. Install new gasket (4) onto rear of filter adapter (3). Install adapter and oil filter fitting (2). Tighten to 18.5 ft-lbs (25 Nm).

5. Apply a light coat of engine oil to oil filter gasket to ease filter installation. Install new oil filter (1) and hand tighten.

6. Connect oil cooler hoses to elbows on oil filter adapter (Para. 4-38).

7. Service engine oil (Para. 4-1). Inspect area around oil filter and oil cover for leakage and tighten as required.

8. Close oil filter access door and lock using door latches.

4-52. OIL PRESSURE SWITCH MAINTENANCE

This task covers removal, inspection, and installation

INITIAL SETUP

Tools:
Shop Equipment, Automotive Maintenance and Repair (Item 1, App. B)

Equipment Condition:
APU Shut Down
NATO Plug Disconnected

A. REMOVAL.

1. Open oil filter access door by turning door latches.

2. Disconnect electrical leads (1, Figure 4-42) from oil pressure switch (2).

3. Unscrew oil pressure switch (2) from engine oil cover.

B. INSPECTION.

1. Inspect oil pressure switch for damage. Inspect for crossed, stripped, or flattened threads.

2. Inspect electrical wires for cuts, abrasions, bare wires, or corrosion. Inspect wire insulation for damage.

C. INSTALLATION.

1. Install oil pressure switch (2, Figure 4-42) into engine oil cover.

2. Connect electrical leads (1) to oil pressure switch (2).

3. Close oil filter access door and lock using door latches.

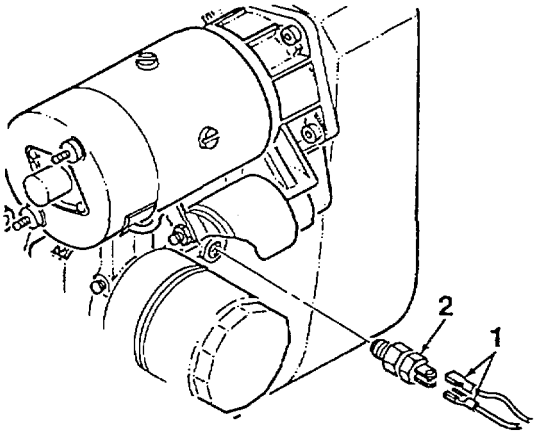

Figure 4-42. Oil Pressure Switch

4-53. OIL FILL TUBE MAINTENANCE

This task covers removal, inspection, and installation

INITIAL SETUP

Tools:
Shop Equipment, Automotive Maintenance and Repair (Item 1, App. B)

Equipment Condition:
APU Shut Down
NATO Plug Disconnected

A. REMOVAL.

1. Open top front cover from APU enclosure by turning latches.

2. Remove cap (1, Figure 4-43) from oil fill tube (2). Inspect cap gasket (3) and discard if damaged.

3. Remove oil fill tube (2) from engine by removing three screws (4) and washers (5). Remove gasket (6).

4. If required, remove lanyard (7) from cap (1) by removing screw (8).

B. INSPECTION.

1. Inspect cap and fill tube for damage. Inspect for crossed, stripped, or flattened threads. Check for corrosion of contaminant build-up.

2. Inspect fill tube gasket for cuts, tears, deformation, deterioration, or signs of permanent set. Replace if any signs of damage.

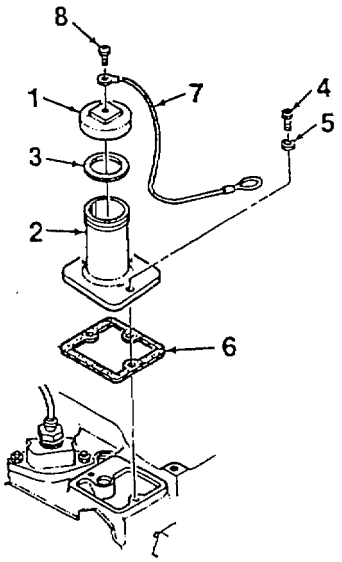

Figure 4-43. Oil Fill Tube (Sheet 1 of 2)

4-53. OIL FILL TUBE MAINTENANCE

C. INSTALLATION.

1. Mate gasket (6, Figure 4-43) to engine oil port. Install oil fill tube (2) using three screws (4) and washers (5).

2. If required, install new gasket (3) into cap (1). Screw cap onto oil fill tube (2).

3. If removed, secure lanyard (7) to cap (1) using screw (8).

4. Close top front cover and secure by locking latches.

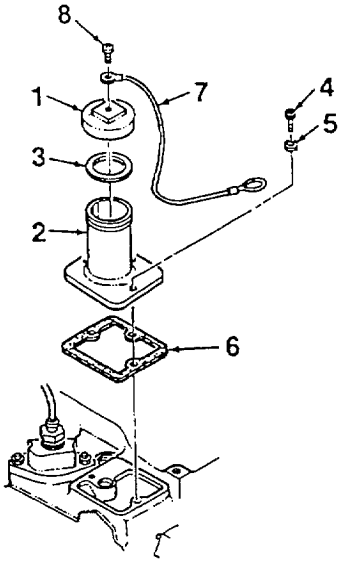

Figure 4-43. Oil Fill Tube (Sheet 2 of 2)

4-54. STARTER MAINTENANCE

This task covers removal, inspection, and installation

INITIAL SETUP

Tools:
Shop Equipment, Automotive Maintenance and Repair (Item 1, App. B)

Equipment Condition:
APU Cover Assembly Removed (Para. 4-12)
Engine Start Solenoid Removed (Para. 4-45)

A. REMOVAL.

NOTE

Discard and replace all lockwashers and locknuts when removed.

1. Pull back rubber boot (1, Figure 4-44) to expose wire lug (2). Remove nut (3), lockwasher (4), and washer (5).

2. Tag electrical wire (6). Disconnect wire from starter by removing screw (7).

3. Remove starter (8) from engine by removing screws (9, 10).

4. Remove bushing only if damaged. Remove by driving out of crankcase using a hammer and punch.

B. INSPECTION.

1. Inspect starter for obvious damage. Inspect for corrosion and signs of electrical short. Inspect starter shaft for damage.

2. Inspect bushing in crankcase for scoring, deformation, or excessive wear.

3. Inspect electrical wires for cuts, abrasions, bare wires, or corrosion. Inspect wire insulation for damage.

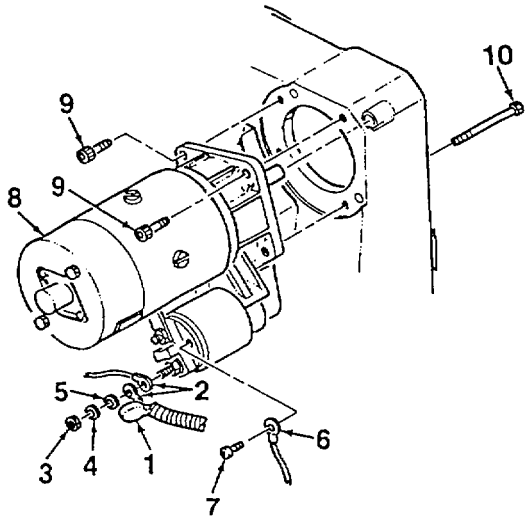

Figure 4-44. Engine Starter (Sheet 1 of 2)

C. INSTALLATION.

1. If removed, install bushing by pressing into crankcase.

2. Mate motor (8, Figure 4-44) to engine, ensuring motor shaft meshes with flywheel ring gear. Secure motor using screws (9, 10).

3. Connect electrical wire (6) to starter (8) using screw (7).

4. Pull back rubber boot (1) to expose wire lug (2). Install lug onto solenoid stud and secure using nut (3), lockwasher (4), and washer (5).

5. Install engine start solenoid (Para. 4-45). Install APU cover assembly (Para. 4-12).

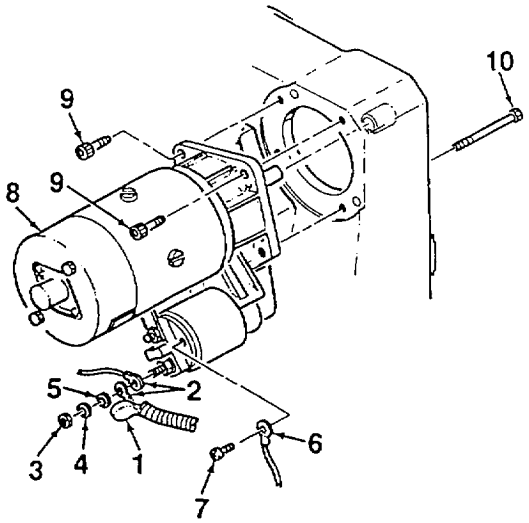

Figure 4-44. Engine Starter (Sheet 2 of 2)

4-55. MECHANICAL FUEL PUMP MAINTENANCE

This task covers removal, inspection, and installation

INITIAL SETUP

Tools:
Shop Equipment, Automotive Maintenance and Repair (Item 1, App. B)

Equipment Condition:
APU Shut Down
NATO Plug Disconnected

A. REMOVAL.

1. Open top front cover on APU enclosure by turning latches.

2. Remove banjo bolts (1, Figure 4-45), washers (2), fuel pipes (3), and gaskets (4) from fuel pump (5).

3. Remove fuel pump (5) from engine studs (6) by removing two nuts (7) and washers (8). Remove gasket (9).

B. INSPECTION.

1. Inspect engine fuel hose for punctures, cuts, tears, deterioration, or other damage.

2. Inspect fuel feed pump for damage. Inspect for evidence of leakage or corrosion.

3. Refer to Troubleshooting, Table 4-9, for testing of the mechanical fuel pump.

C. INSTALLATION.

1. Mate gasket (9, Figure 4-45) to fuel pump (5). Install pump onto studs (6) and secure using two nuts (7) and washers (8).

2. Attach fuel pipes (3) to fuel pump (5) using bolts (1), washers (2), and gaskets (4).

3. Close top front cover and secure using latches.

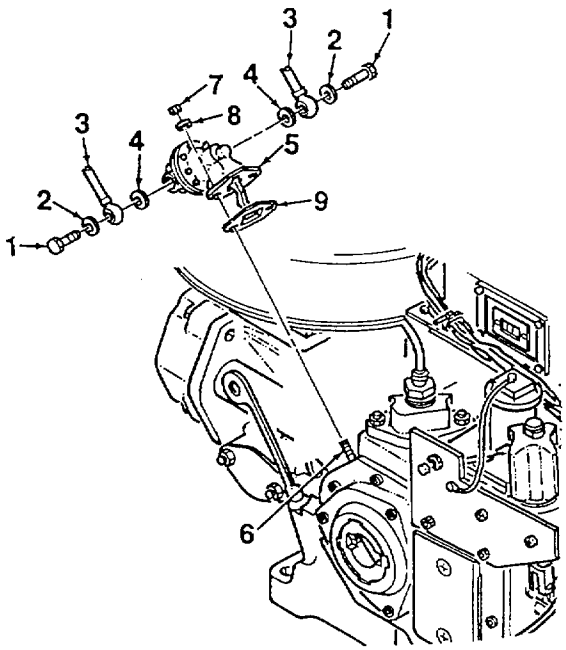

Figure 4-45. Mechanical Fuel Pump

4-56. AIR HEAT GLOW PLUG MAINTENANCE

This task covers removal, inspection, and installation

INITIAL SETUP

Tools:
Shop Equipment, Automotive Maintenance and Repair (Item 1, App. B)

Equipment Condition:
Engine Air Filter Removed (Para. 4-43)

A. REMOVAL.

1. Disconnect electrical wires (1, 2, Figure 4-46) from glow plugs (5) by removing nuts (3) and washers (4).

2. Unscrew two glow plugs (5) and attached spacers (6) from engine block. Retain spacers.

B. INSPECTION.

1. Inspect electrical wire for cuts, abrasions, and bare wire. Check wiring insulation for damage.

2. Inspect glow plugs for obvious damage. Inspect probe portion of plugs for cracks or signs of heat stress.

C. INSTALLATION.

1. Screw two glow plugs (5, Figure 4-46) and attached spacers (6) into engine block.

2. Connect electrical wires (1, 2) to glow plugs (5) using nuts (3) and washers (4).

3. Install engine air filter (Para. 4-43).

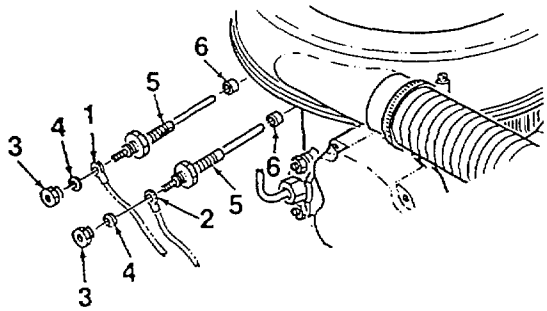

Figure 4-46. Air Heat Glow Plug

4-57. OIL HEAT GLOW PLUG MAINTENANCE

This task covers removal, inspection, and installation

INITIAL SETUP

Tools:
Shop Equipment, Automotive Maintenance and Repair (Item 1, App. B)

Equipment Condition:
APU Shut Down
NATO Plug Disconnected

A. REMOVAL.

1. Open top front cover on APU enclosure by turning latches.

2. Disconnect electrical wire (1, Figure 4-47) from glow plug (5) by removing nut (2), lockwasher (3), and washer (4).

3. Unscrew glow plug (5) from engine block. Remove washer (6).

B. INSPECTION.

1. Inspect electrical wire for cuts, abrasions, and bare wire. Check wiring insulation for damage.

2. Inspect glow plug for obvious damage. Inspect probe portion of plug for cracks or signs of heat stress.

C. INSTALLATION.

1. Install glow plug (5, Figure 4-47) and washer (6) into engine block.

2. Connect electrical wire (1) to glow plug (5) using nut (2), lockwasher (3), and washer (4).

3. Close top front cover and secure using latches.

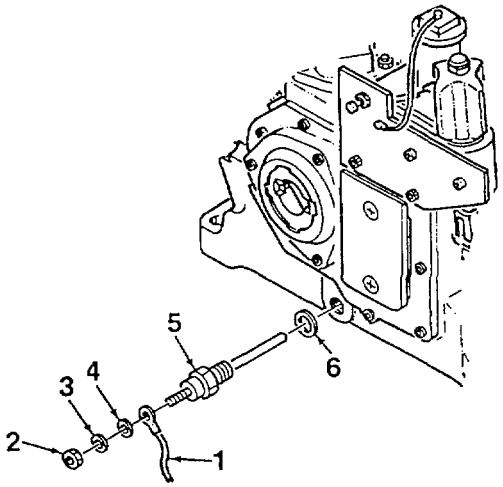

Figure 4-47. Oil Heat Glow Plug

4-58. ENGINE TEMPERATURE SWITCH MAINTENANCE

This task covers removal, inspection, and installation

INITIAL SETUP

Tools:
Shop Equipment, Automotive Maintenance and Repair (Item 1, App. B)

Equipment Condition:
APU Shut Down
NATO Plug Disconnected

A. REMOVAL.

1. Open top front cover on APU enclosure by turning latches.

2. Disconnect engine exhaust bellows (1, Figure 4-48) from rear of valve access door (2) by removing screw (3), lockwasher (4), and washer (5).

3. Open valve access door (2) by turning door latches.

4. Disconnect electrical wire (6) from temperature switch (9) by removing nut (7) and washer (8).

5. Unscrew temperature switch (9) and washer (10) from engine block.

B. INSPECTION.

1. Inspect electrical wire for cuts, abrasions, and bare wire. Check wiring insulation for damage.

2. Inspect temperature switch for obvious damage. Inspect probe portion of switch for cracks or signs of heat stress.

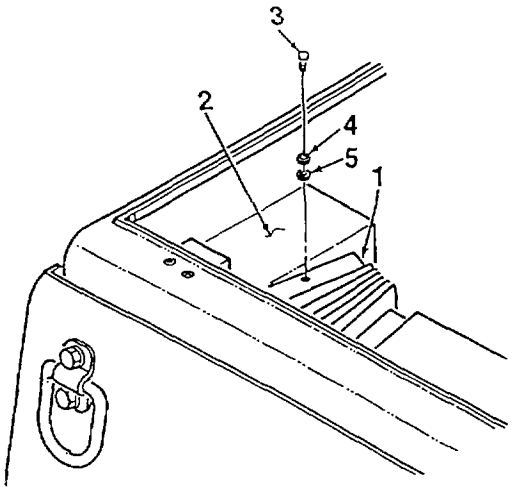

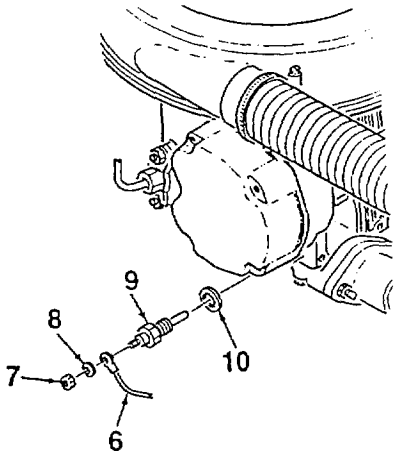

Figure 4-48. Temperature Switch (Sheet 1 of 2)

4-58. ENGINE TEMPERATURE SWITCH MAINTENANCE

C. INSTALLATION.

1. Screw temperature switch (9, Figure 4-48) and washer (10) into engine block.

2. Connect electrical wire (6) to temperature switch (9) using nut (7) and washer (8).

3. Close valve access door (2) and lock by turning door latches.

4. Mate engine exhaust bellows (1) to rear of valve access door (2). Secure using screw (3), lockwasher (4), and washer (5).

5. Close top front cover and secure using latches.

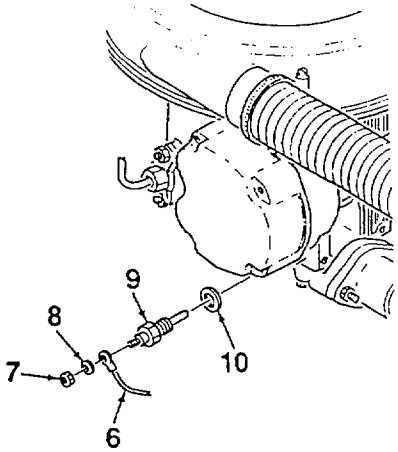

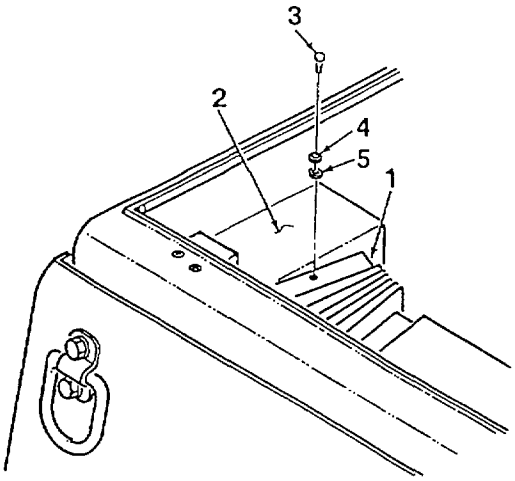

Figure 4-48. Temperature Switch (Sheet 2 of 2)

4-59. HOUR METER MAINTENANCE

This task covers removal, inspection, and installation

INITIAL SETUP

Tools:
Shop Equipment, Automotive Maintenance and Repair (Item 1, App. B)

Equipment Condition:
Nosepiece Assembly Removed (Para. 4-15)

A. REMOVAL.

NOTE

Discard and replace all lockwashers and locknuts when removed.

1. Disconnect electrical wires from hour meter (5, Figure 4-49) and circuit breaker (13).

2. Remove bracket (1) from APU enclosure by removing screws (2), lockwashers (3), and washers (4).

3. Remove hour meter (5) and backing plate (9) from bracket (1) by removing screws (6), washers (7), nuts (8), and grommets (10).

4. Remove circuit breaker (13) from bracket (1) by removing screws (12) and nuts (11).

B. INSPECTION.

1. Inspect electrical wire for cuts, abrasions, and bare wire. Check wiring insulation for damage.

2. Inspect hour meter for obvious damage. Inspect glass for cracks.

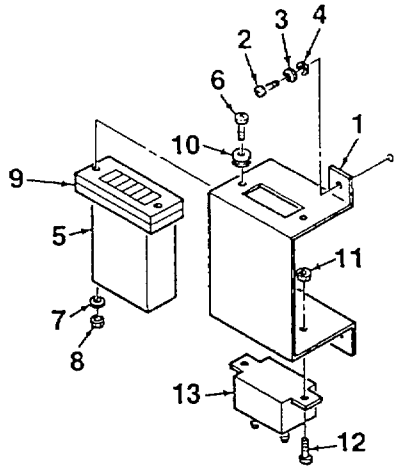

Figure 4-49. Hour Meter (Sheet 1 of 2)

4-59. HOUR METER MAINTENANCE

C. INSTALLATION.

1. Install circuit breaker (13, Figure 4-49) onto bracket (1) using screws (12) and nuts (11).

2. Install hour meter (5) and backing plate (9) onto bracket (1) using screws (6), washers (7), nuts (8), and grommets (10).

3. Install bracket (1) onto APU enclosure using screws (2) and washers (3).

4. Connect electrical wires to hour meter (5) and circuit breaker (13).

5. Install nosepiece assembly (Para. 4-15).

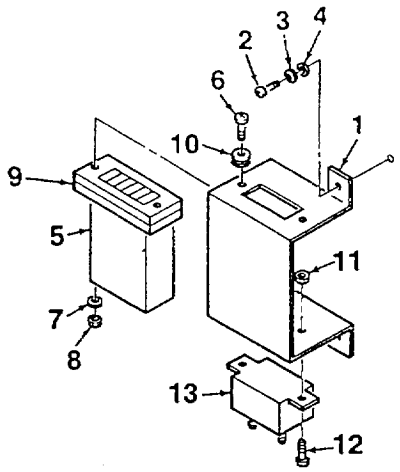

Figure 4-49. Hour Meter (Sheet 2 of 2)

Section VII. PREPARATION FOR SHIPMENT AND STORAGE

4-60. GENERAL.

This section provides instructions for short term and intermediate storage or shipment of the APU.

4-61. ADMINISTRATIVE STORAGE.

Administrative storage shall be in accordance with AR 750-1.

4-62. SHORT TERM STORAGE (30 days or less).

a. Check engine oil level and service as required (Para. 4-1).

b. Check that engine crank handle is securely stowed under APU enclosure.

c. Conduct a general inspection of the unit to ensure all components are present and securely fastened. Close all doors and lids and lock in position.

d. Stow the APU on a level surface in an area protected from the elements. Cover as required depending upon weather conditions.

4-63. INTERMEDIATE TERM STORAGE (more than 30 days).

a. Start the APU (Para. 2-8) and operate for 10 minutes at full speed to bring engine to normal operating temperature. Shutdown the APU.

b. Drain the engine oil (Para. 4-1). Fill crankcase to proper level with preservative lubricating oil.

c. Perform all MONTHLY PMCS requirements (Table 4-2).

d. Close air intake and exhaust openings with moisture proof tape.

e. Stow the APU on a level surface in an area protected from the elements. Cover as required depending upon weather conditions.

f. Before returning APU to service, drain preservative oil and service the engine (Para. 4-1).

4-64. SHIPMENT.

a. Close air intake and exhaust openings with moisture proof tape.

b. Attach to the APU all forms, tags, and records applicable to the unit.

c. Load APU onto carrier and attach shipping tiedowns.

CHAPTER 5
DIRECT SUPPORT MAINTENANCE INSTRUCTIONS

Section I. REPAIR PARTS; TOOLS; SPECIAL TOOLS; TEST, MEASUREMENT, AND DIAGNOSTIC EQUIPMENT (TMDE); AND SUPPORT EQUIPMENT

5-1. COMMON TOOLS AND EQUIPMENT.

a. For authorized common tools and equipment, refer to the Modified Table of Organization and Equipment (MTOE), CTA 50-970, or CTA 8-100, as applicable to your unit.

b. Tool Kit, General Mechanics; Automotive, Supply Catalog SC5180-90-CL-N26, is the primary supply source for tools used in maintenance of the APU.

5-2. SPECIAL TOOLS, TMDE, AND SUPPORT EQUIPMENT.

Refer to Appendix G, Repair Parts and Special Tools List, for complete data on special tools and equipment required for APU maintenance. Refer to the Maintenance Allocation Chart (MAC), Appendix B, for special tools and equipment used at the direct support maintenance level.

5-3. REPAIR PARTS.

a. Refer to Appendix J for a list of Mandatory Replacement Parts required for general support level maintenance of the APU.

b. Repair parts are listed and illustrated in Appendix G, Repair Parts and Special Tools List.

Section II. SERVICE UPON RECEIPT

5-4. GENERAL.

Refer to paragraph 2-4 for instructions on unpacking, assembly, and servicing of APU components.

Section III. TROUBLESHOOTING

5-5. GENERAL.

This section contains direct support level troubleshooting information and tests for the APU. Troubleshooting logic trees will aide in locating and correcting APU malfunctions. Each malfunction or trouble symptom is addressed and is followed by a series of inspections or tests necessary to determine the probable cause and corrective action.

5-6. TROUBLESHOOTING.

a. This manual can not list all possible malfunctions that may occur, all tests or inspections that may be performed, or all corrective actions for each malfunction. Only those checks and tests authorized for the direct support level are covered. If a malfunction is not listed, or is not remedied by corrective actions, notify personnel at a higher maintenance level.

b. Refer to the system electrical schematic (Figure FO-1) and wiring diagrams for assistance in troubleshooting electrical components.

c. Refer to Table 5-1, Malfunction Index, for determining applicable troubleshooting procedure.

Table 5-1. Malfunction Index

	Table
Engine will not crank	5-2
Engine starts but fires intermittently or dies	5-3
Engine stops suddenly	5-4
Engine speed fluctuates	5-5
Engine hammers or knocks	5-6
Engine emits black smoke	5-7

Table 5-2. ENGINE WILL NOT CRANK

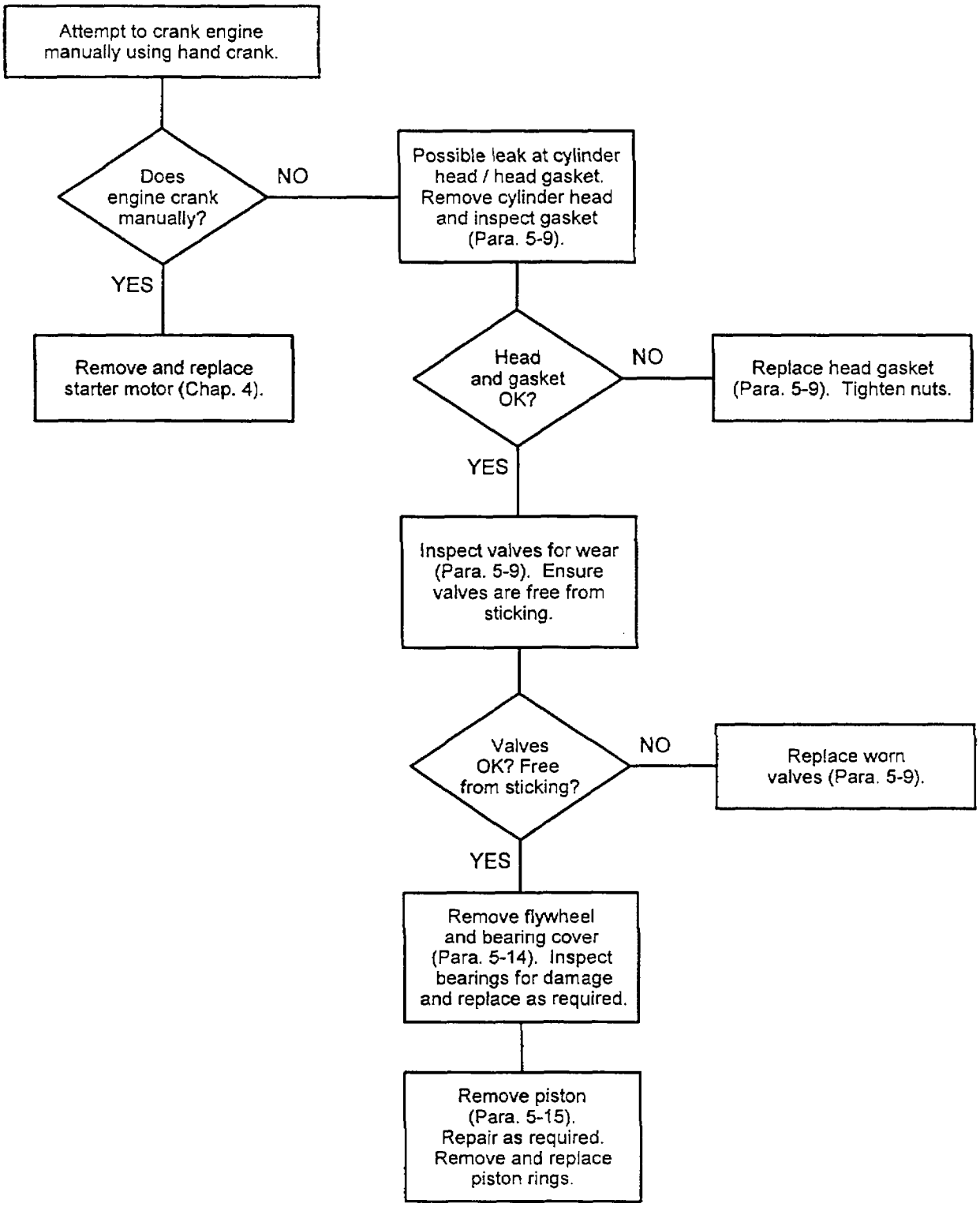

Table 5-3. ENGINE STARTS BUT FIRES INTERMITTENTLY OR DIES

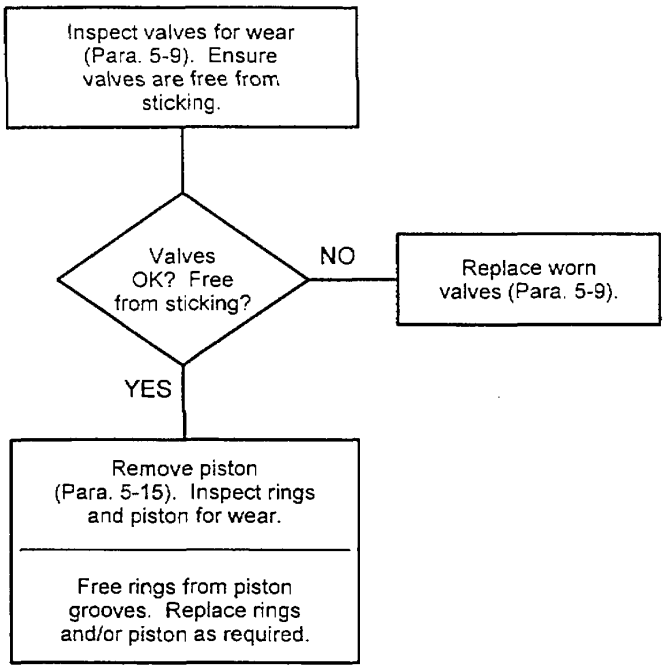

Table 5-4. ENGINE STOPS SUDDENLY

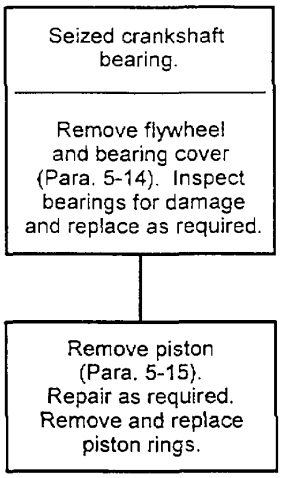

Table 5-5. ENGINE SPEED FLUCTUATES

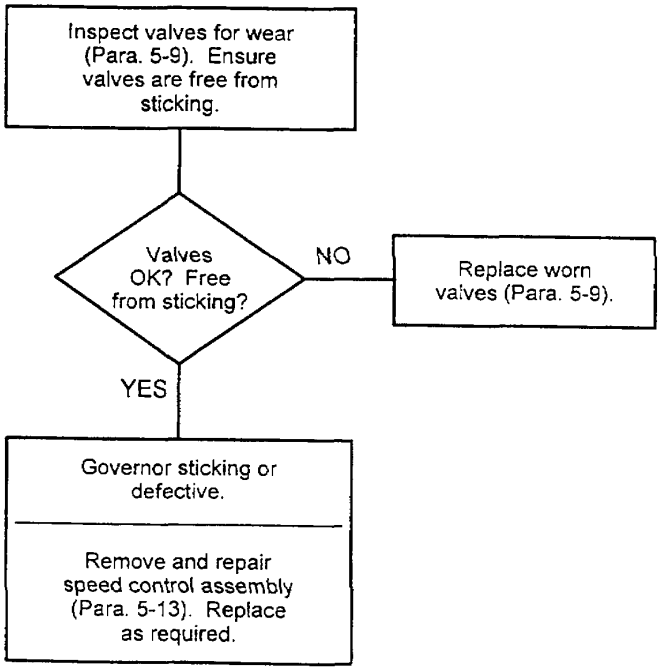

Table 5-6. ENGINE HAMMERS OR KNOCKS

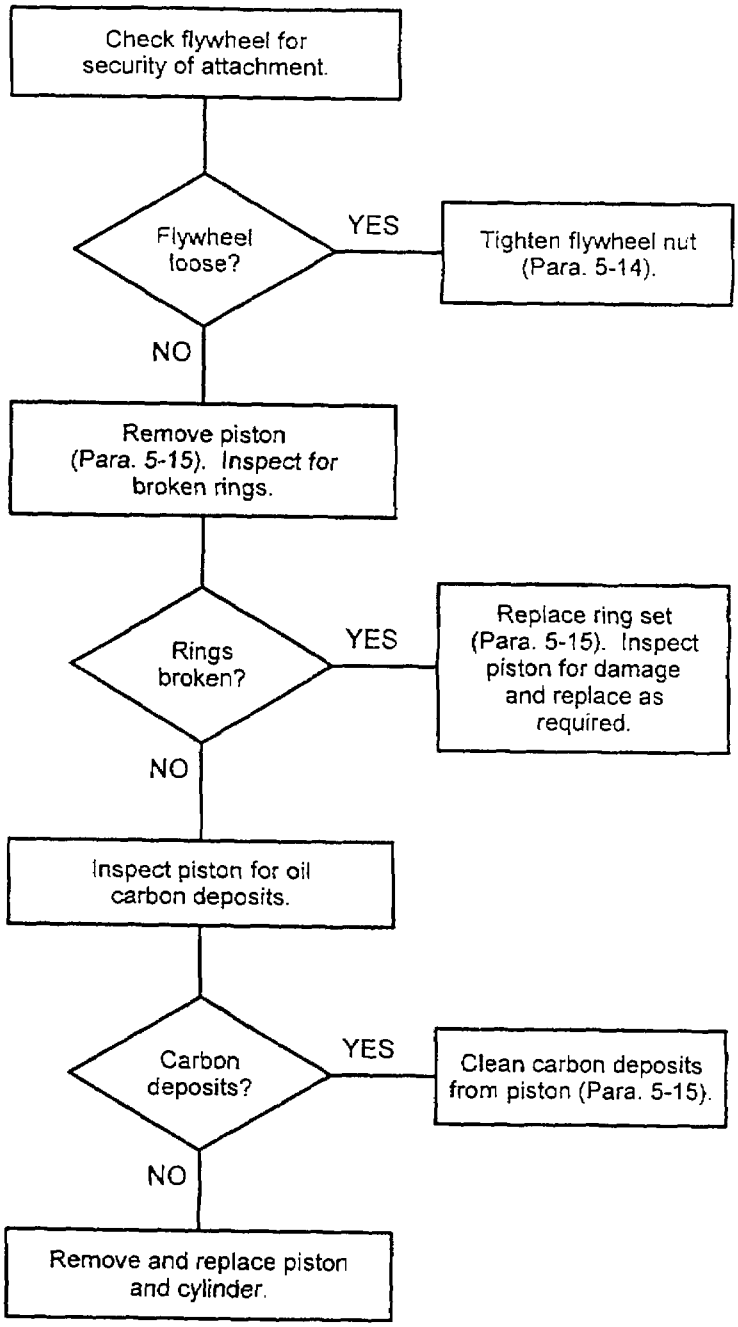

Table 5-7. ENGINE EMITS BLACK SMOKE

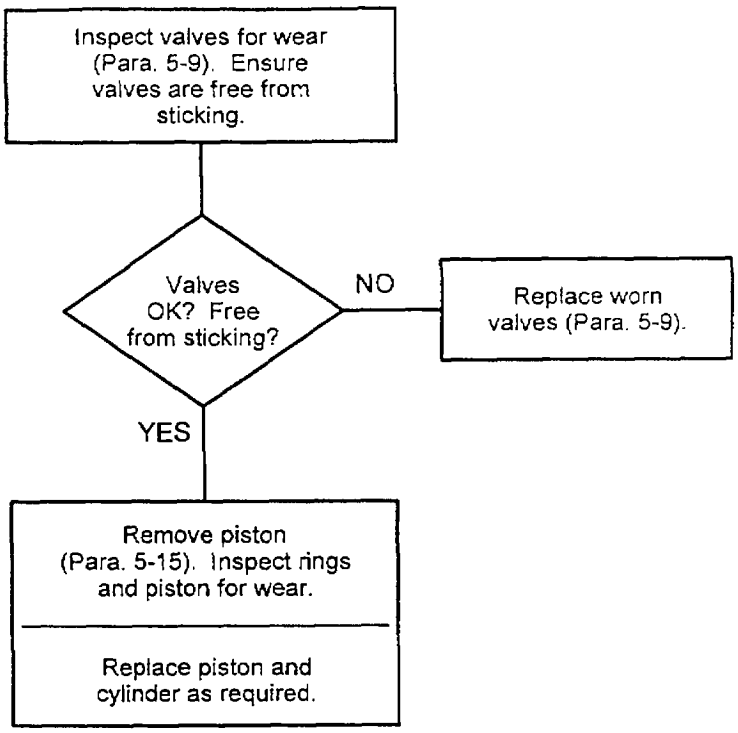

Section IV. MAINTENANCE PROCEDURES

5-7. ENGINE/ALTERNATOR ASSEMBLY MAINTENANCE

This task covers removal, inspection, repair, and installation

INITIAL SETUP

Tools:
- Shop Equipment, Automotive Maintenance and Repair (Item 4, App. B)
- Lifting Hoist, 600 lb. capacity

Personnel Required:
- 2 Maintenance Personnel

Equipment Condition:
- Enclosure Lid Assembly and Brackets Removed (Para. 4-11)
- Nosepiece Removed (Para. 4-15)
- Fuel Module Removed (Para. 4-30)
- Oil Cooler Hoses Disconnected (Para. 4-38)
- Exhaust Silencer Removed (Para. 4-41)
- Engine Exhaust Bellows Disconnected (Para. 4-42)
- In-Line Fuel Filter Disconnected (Para. 4-48)

Parts/Materials:
- Adhesive, Silicon (Item 2, App. E)

A. REMOVAL.

WARNING

Make sure that electrical cable is disconnected from NATO receptacle before performing any maintenance action. Failure to do so can result in electrical shock.

1. Disconnect electrical wiring harness from oil cooler fan connector. Disconnect wires from hour meter and circuit breaker (Para. 4-59).

2. Remove oil drain plug (1, Figure 5-1), nut (2), and washer (3) to release oil drain assembly from APU enclosure. Remove and retain washer (4).

3. Remove air inlet hose (5) from engine air fitter (7) by loosening clamp (6).

4. Release electrical wiring harness (8) from back wall of APU enclosure by removing screws (9), nuts (10), washers (11), and nuts (12). Remove clamps (13) only if replacement is required.

5. Remove manual start switch (14) from mounting bracket (15) by removing nut (16) and washer (17).

5-7. ENGINE/ALTERNATOR ASSEMBLY MAINTENANCE

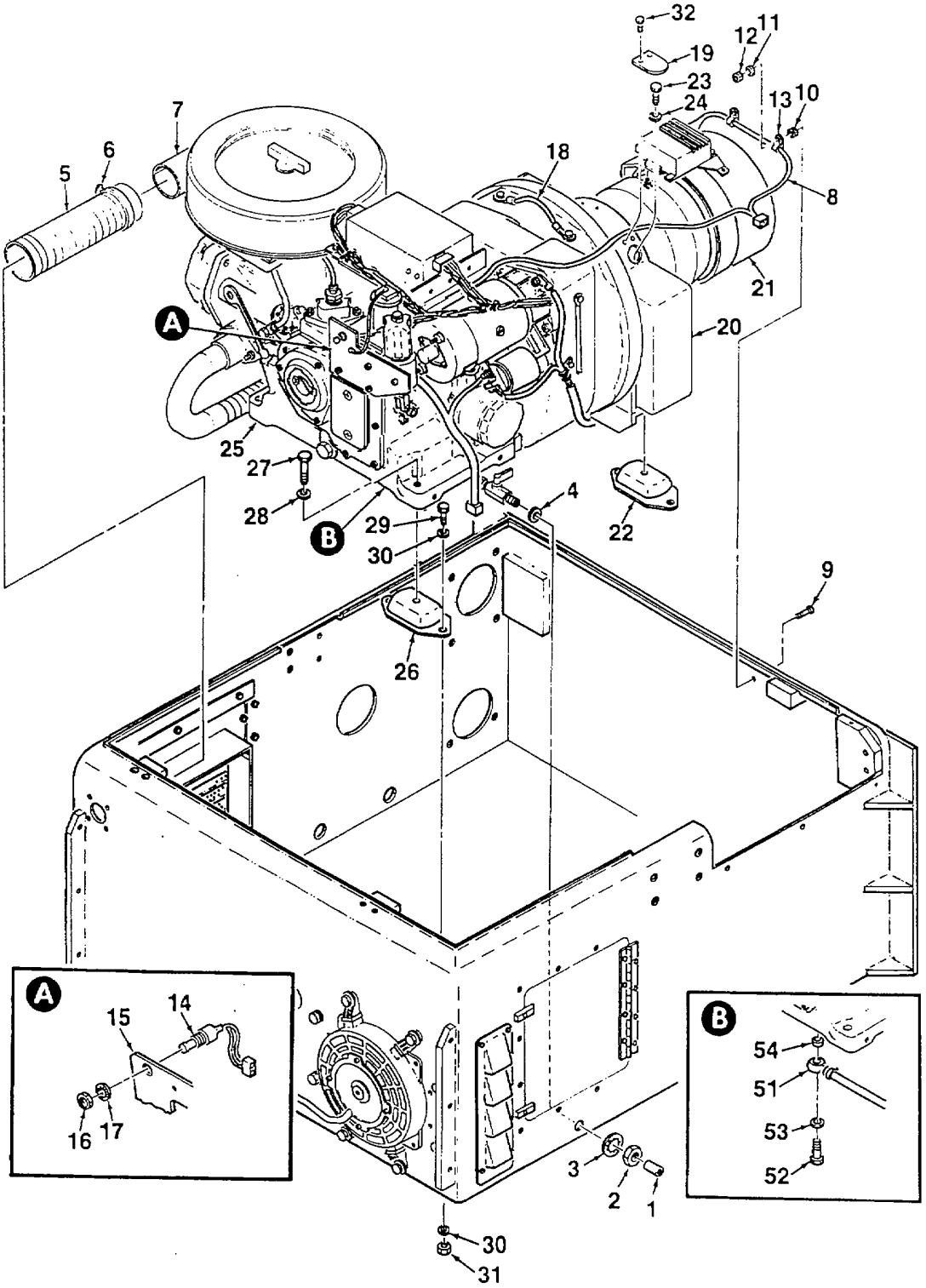

Figure 5-1. Engine /Alternator Assembly
(Sheet 1 of 5)

5-7. ENGINE/ALTERNATOR ASSEMBLY MAINTENANCE

WARNING

Engine and alternator assembly is heavy and awkward. Enlist the help of an assistant when removing to prevent injury to personnel and damage to components.

6. Attach lifting hoist to engine/alternator lift cable (18). Raise hoist to remove slack.

7. Lift rubber flap (19) from flywheel shroud (20) to gain access to mounting screw (23).

NOTE

Do not intermix mounting screws (23, 27). Screws (27) are longer.

8. Release alternator (21) from shock mounts (22) by removing two screws (23) and washers (24). Release engine (25) from shock mounts (26) by removing two screws (27) and washers (28).

9. Carefully lift engine and alternator assembly up and out of enclosure. Place in an engine stand or on a flat work surface for further maintenance.

10. If replacement of oil drain hose (51) is required, disconnect hose from bottom of engine by removing banjo bolt (52) and spacers (53, 54).

11. Remove shock mounts (22, 26) from base of enclosure by removing eight screws (29), washers (30), and nuts (31).

12. If required, remove rubber flap (19) from flywheel shroud (20) by removing rivets (32).

OPERATOR AND MAINTENANCE TRAINING COURSE
5KW, 28VDC, APU, MEP-952B

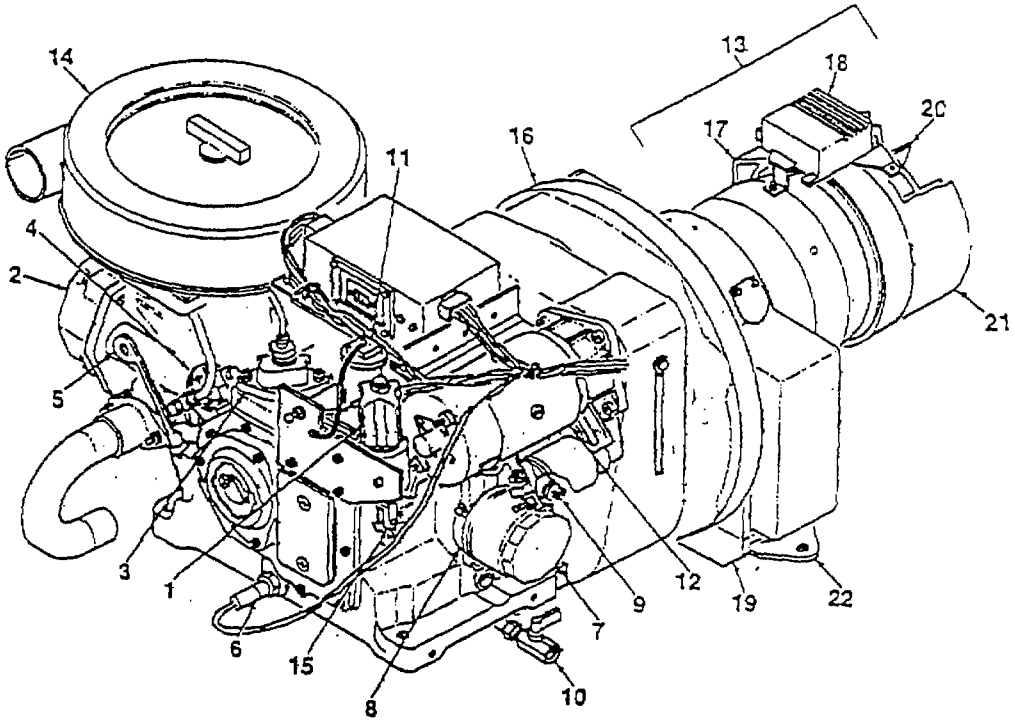

1. Solenoid
2. Fuel Injector Assy
3. Fuel Inject. Pump
4. Fuel Feed Pump
5. Oil Level Dipstick
6. Oil Pre-Heater
7. Engine Oil Filter
8. Oil Pressure Valve
9. Oil Pressure Switch
10. Oil Drain Valve
11. Oil Filler
12. Starter Motor
13. Alternator Assy
14...Air Filter Assy
15. Speed Control Ay
16. Flywheel Housing
17. Alternator
18. Regulator
19. Mounting Bracket
20. Twin Fan Assy
21. Fan Guard
22. Mounting Feet

1-1-4. ENGINE AND ALTERNATOR

13. Remove air inlet duct (33) from inside of APU enclosure by removing seven screws (34), washers (35), and nuts (36).

14. If replacement is required, remove insulating material (37) from air inlet duct (33) by separating retainers (38) from rivets (39).

15. Remove two-piece engine crank handle brackets (40) from under APU enclosure by removing bolts (41), washers (42), and nuts (43).

16. Remove three footman loops (44) from under APU enclosure by removing screws (45) and nuts (46).

17. Remove engine air intake duct (47) from APU enclosure by removing four screws (48), eight washers (49), and four nuts (50).

18. Remove enclosure drain plug (51).

19. Remove soundproofing material from inside walls of APU enclosure by removing dome washers.

B. INSPECTION.

1. Inspect engine and alternator for obvious damage. Clean as required to view all components carefully. Look for signs of fluid leakage. Check all sealing areas and surfaces.

2. Inspect electrical wiring for cuts, abrasions, or bare wire. Inspect wiring insulation for damage. Check that all connectors and lugs are securely fastened.

3. Inspect fuel and oil hoses for punctures, tears, kinks, or evidence of leakage. Ensure all hose fittings are securely fastened.

4. Inspect all fittings for corrosion, deterioration, or damage. Inspect for stripped, crossed, or flattened threads.

5. Conduct detailed inspection of suspect components in accordance with the appropriate maintenance paragraph.

C. REPAIR.

Repair of the engine and alternator assembly consists of removal and replacement of engine/alternator components. Refer to the appropriate maintenance paragraph for procedures.

5-7. ENGINE/ALTERNATOR ASSEMBLY MAINTENANCE

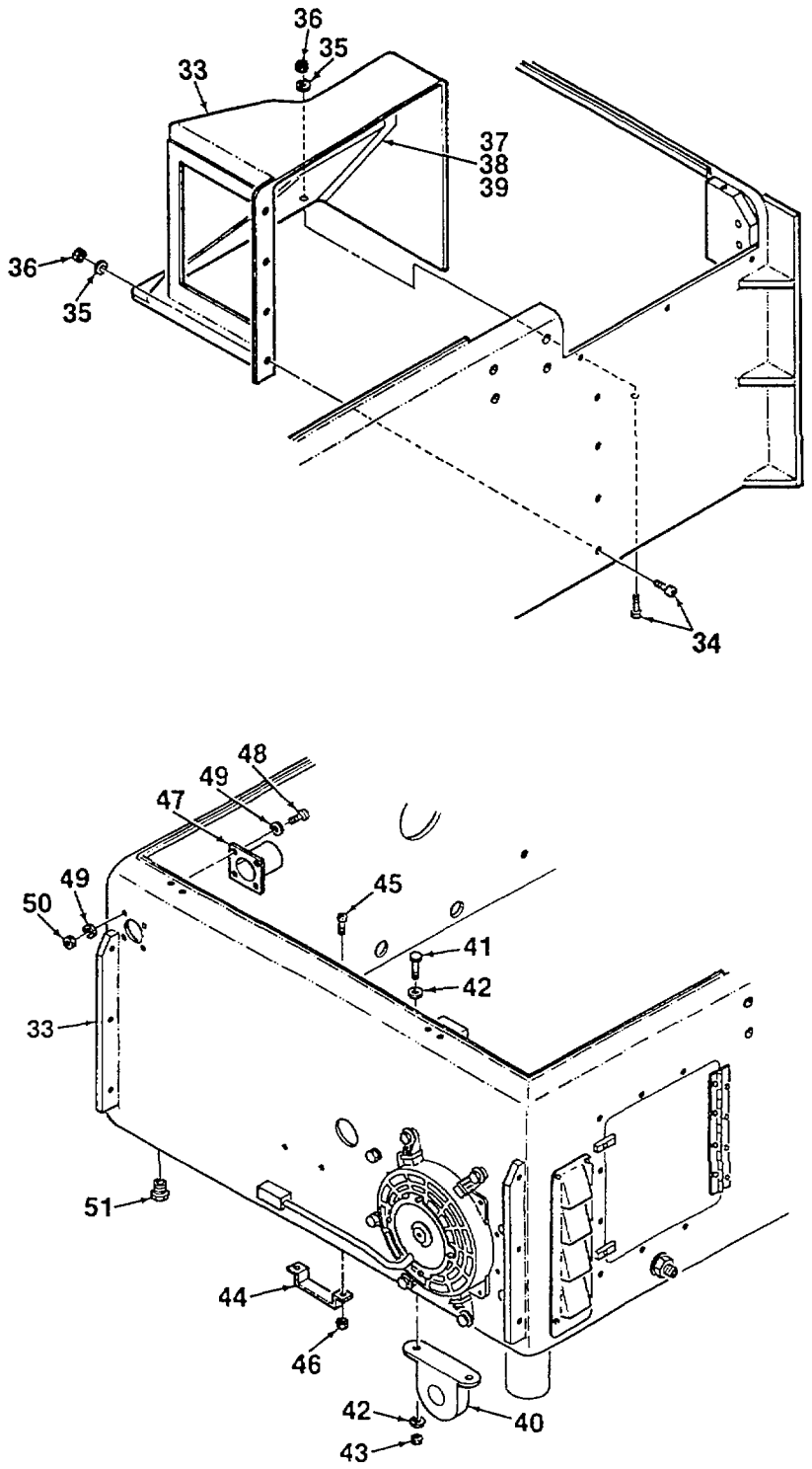

Figure 5-1. Engine/Alternator Assembly (Sheet 3 of 5)

5-7. ENGINE/ALTERNATOR ASSEMBLY MAINTENANCE

D. INSTALLATION.

1. Mate insulating material (37, Figure 5-1) to air inlet duct (33). Secure by pressing retainers (38) onto rivets (39).

2. Install air inlet duct (33) into APU enclosure using seven screws (34), washers (35), and nuts (36). After duct is installed, apply a bead of silicon adhesive around all surfaces where duct contacts enclosure.

3. Install two-piece engine crank handle brackets (40) to underside of APU enclosure using bolts (41), washers (42), and nuts (43).

4. Install three footman loops (44) to underside of APU enclosure using screws (45) and nuts (46).

5. Install engine air intake duct (47) onto APU enclosure using four screws (48), eight washers (49), and four nuts (50).

6. Install enclosure drain plug (51).

7. Mate soundproofing material to inside walls of APU enclosure. Secure using dome washers.

5-7. ENGINE/ALTERNATOR ASSEMBLY MAINTENANCE

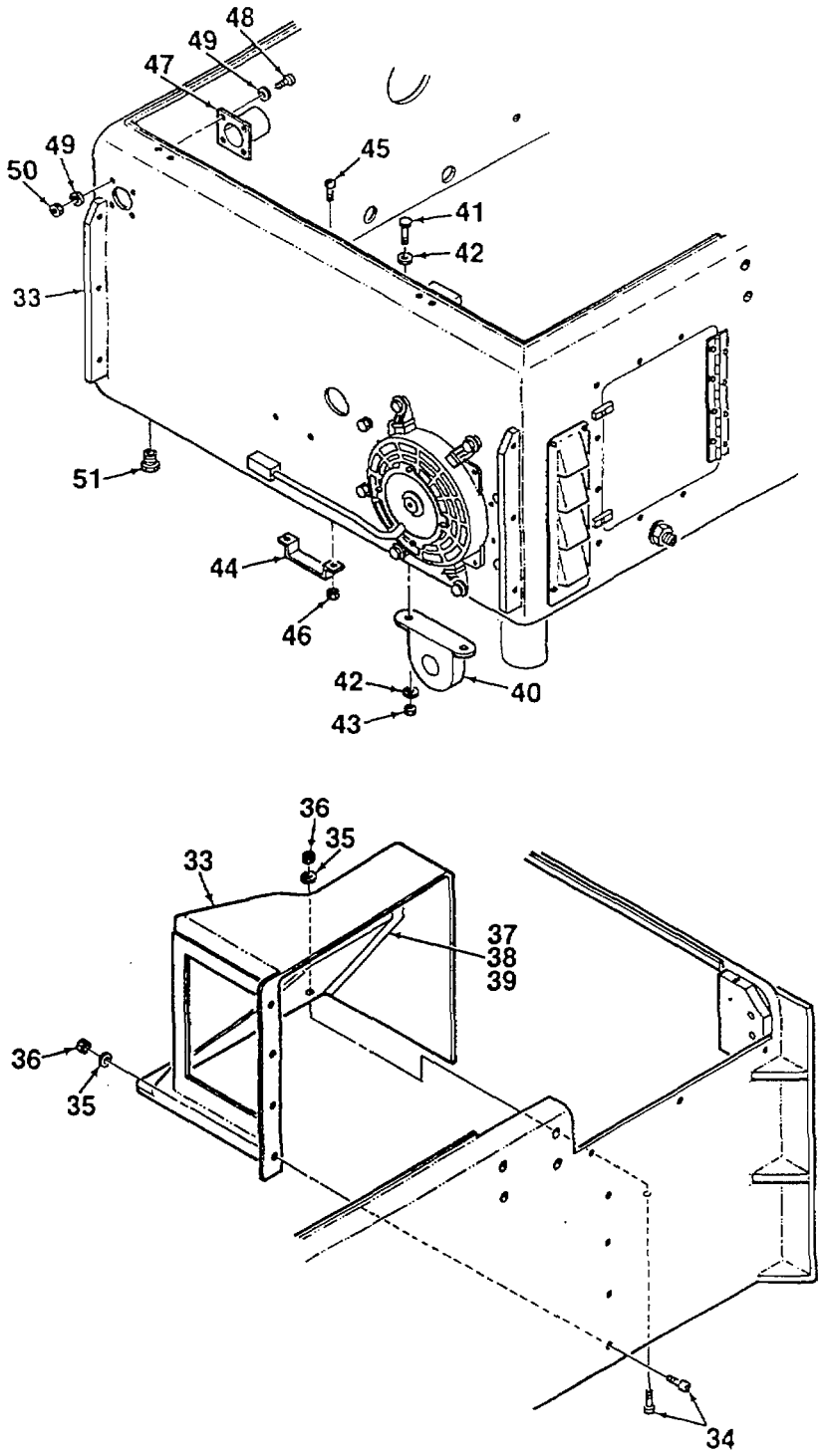

Figure 5-1. Engine /Alternator Assembly
(Sheet 4 of 5)

8. If removed, attach rubber flap (19) to flywheel shroud (20) using new rivets (32).

9. Install shock mounts (22, 26) onto base of enclosure using eight screws (29), washers (30), and nuts (31).

10. Attach oil drain hose (51) to bottom of engine using banjo bolt (52) and spacers (53, 54).

11. Install one screw (23) and washer (24) through hole in flywheel housing (20) into alternator mounting hole. Access to hole is limited once alternator has been lowered into enclosure.

WARNING

Engine and alternator assembly is heavy and awkward. Enlist the help of an assistant when installing to prevent injury to personnel and damage to components.

12. Attach lifting hoist to engine/alternator lift cable (18). Raise hoist to remove slack.

13. Carefully lift engine and alternator assembly up and lower into enclosure. Mate engine/alternator mounting holes with shock mounts (22, 26).

14. Attach engine (25) to shock mounts (26) using two screws (27) and washers (28). Attach alternator (21) to shock mounts (22) using two screws (23) and washers (24).

15. Install manual start switch (14) onto mounting bracket (15) using nut (16) and washer (17).

16. Attach electrical wiring harness (8) to back wall of APU enclosure using two clamps (13), screws (9), nuts (10), washers (11), and locknuts (12).

17. Install washer (4) onto oil drain assembly bulkhead fitting. Insert bulkhead fitting into hole on side of APU enclosure. Install nut (2), washer (3), and oil drain plug (1).

18. Connect air inlet hose (5) to engine air filter (7) and tighten clamp (6). Connect opposite end of hose to enclosure air duct.

19. Connect electrical wiring harness to oil cooler fan connector. Connect electrical wires to hour meter and circuit breaker (Para. 4-49).

20. Connect in-line fuel filter (Para. 4-48). Install fuel module (Para. 4-30).

21. Connect engine exhaust bellows (Para. 4-42) and internal exhaust assembly (Para. 4-41).

22. Connect oil cooler hoses to engine (Para. 4-38).

23. Install nosepiece (Para. 4-15).

24. Install APU cover assembly and brackets (Para. 4-11).

5-7. ENGINE/ALTERNATOR ASSEMBLY MAINTENANCE

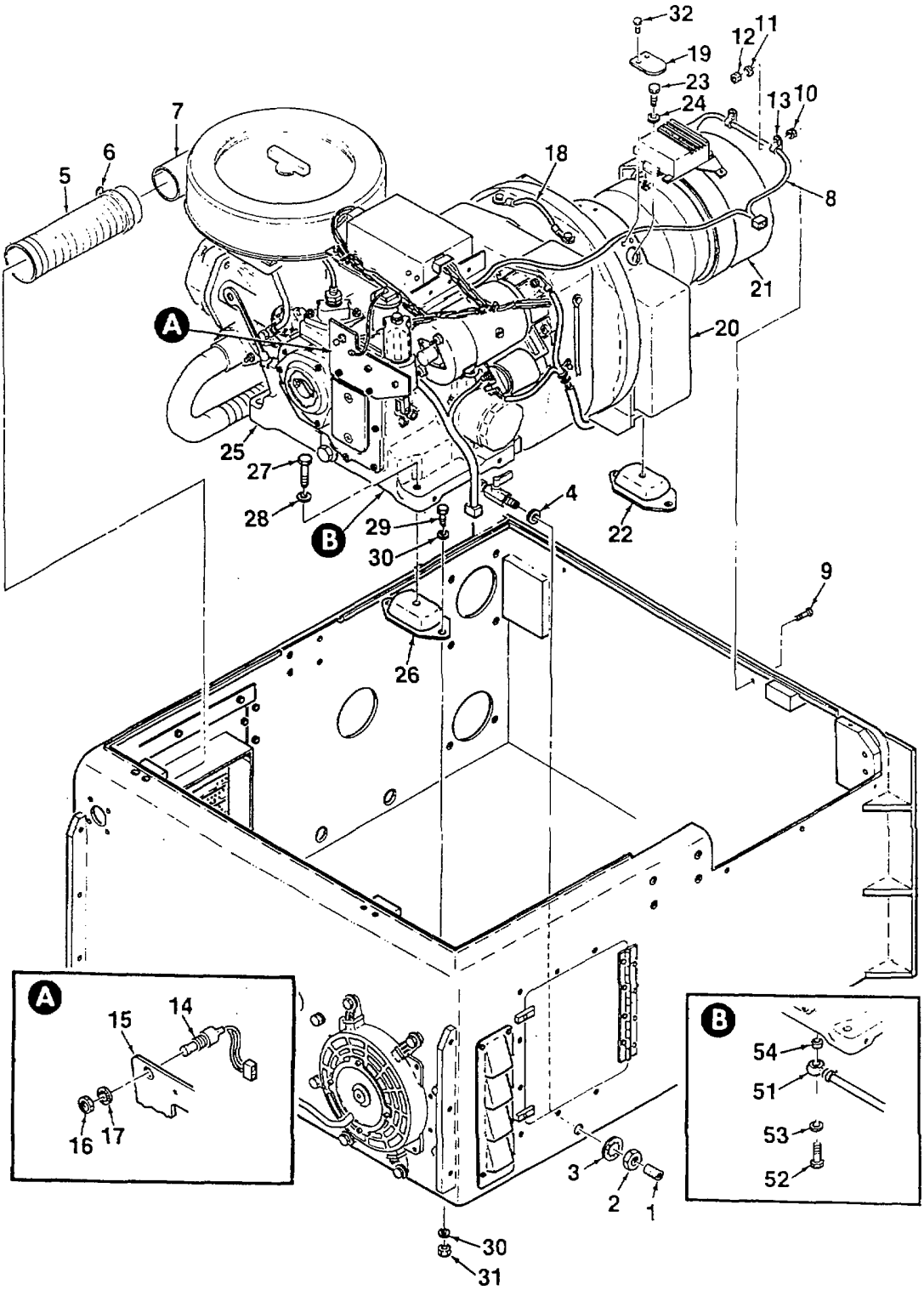

Figure 5-1. Engine /Alternator Assembly (Sheet 5 of 5)

5-8. ENGINE MAINTENANCE

This task covers removal, inspection, and installation

INITIAL SETUP

Tools:
Shop Equipment, Automotive Maintenance and Repair (Item 4, App. B)

Equipment Condition:
Engine/Alternator Assembly Removed From APU (Para. 5-7)

Personnel Required:
2 Maintenance Personnel

A. REMOVAL.

1. Disconnect electrical connector (1, Figure 5-2) from alternator electrical receptacle (2).

2. Tag and disconnect starter ground cable (3) and alternator ground cable (4) from alternator (5) ground terminal by removing screw (6) and lockwasher (7).

3. Release alternator air block (8) by removing three screws (9), lockwashers (10), and washers (11).

4. Remove three screws (12), lockwashers (13), and washers (14) that secure alternator mounting bracket (15) and flywheel housing (16) to engine (17). Remove single alien head bolt (18) and spacer (19).

5. Remove four washers (20) from recesses in flywheel housing (16).

WARNING

Alternator is heavy and awkward. Enlist the help of an assistant when removing to prevent injury to personnel and damage to components.

6. Support alternator (5) and remove four screws (21), lockwashers (22), and washers (23) that secure flywheel housing (16) to engine (17).

7. Carefully separate flywheel housing (16) and alternator (5) from engine (17).

8. If damaged, remove rubber coupling (24) and metal spacer (25) from flywheel on engine (17) by removing four screws (26). Remove four spacer washers (27).

5-8. ENGINE MAINTENANCE

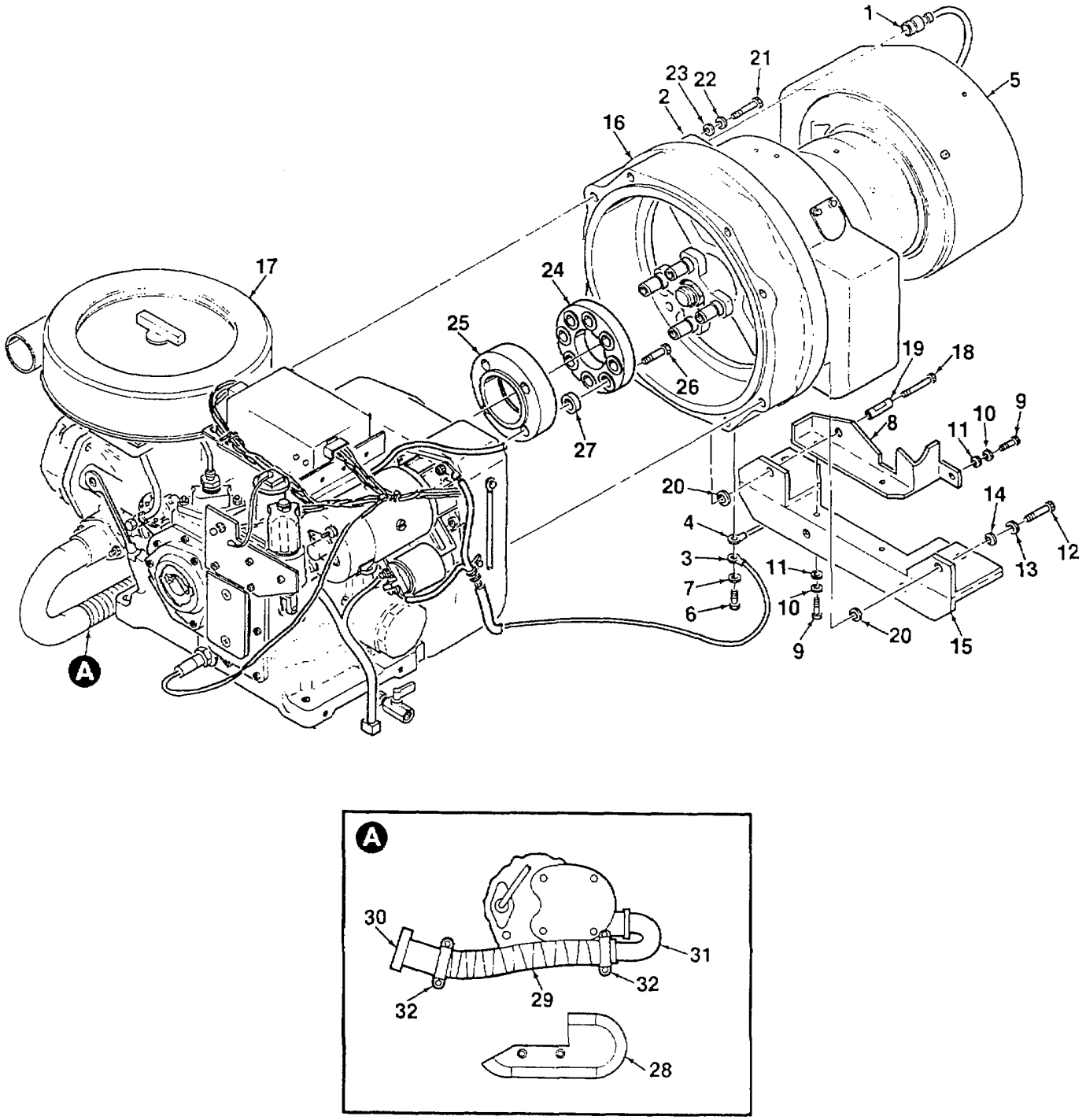

Figure 5-2. Engine Assembly
(Sheet 1 of 3)

5-8. ENGINE MAINTENANCE

NOTE

Perform steps 9 through 11 only if replacing engine.

9. Remove lockwire from exhaust pipe cover (28). Remove cover from engine exhaust piping.

10. Disconnect flexible exhaust hose (29) from adapter pipe (30) and engine exhaust pipe (31) by loosening clamps (32). Remove engine exhaust pipe (31).

11. If engine replacement is required, remove and retain the following items:

    a. Engine preheat module (Para. 4-36)
    b. Engine exhaust duct and bellows (Para. 4-42)
    c. Engine oil filter adapter (Para. 4-50)
    d. Oil filler tube cap and lanyard (Para. 4-53)
    e. Engine wiring harness (Para. 5-7)
    f. Engine oil drain hose assembly (Para. 5-7)
    g. All fuel supply hoses and fitting on fuel return line (5, Figure 5-4)

B. INSPECTION.

1. Inspect engine fuel hoses for punctures, cuts, tears, deterioration, or other damage. Check that hose fittings are securely attached.

2. Inspect all components for evidence of fluid leakage.

3. Inspect engine and alternator for obvious damage. Check for cracks, dents, scratches, and corrosion.

4. Inspect flex coupling components for damage. Inspect for cracks, cuts, or deformation.

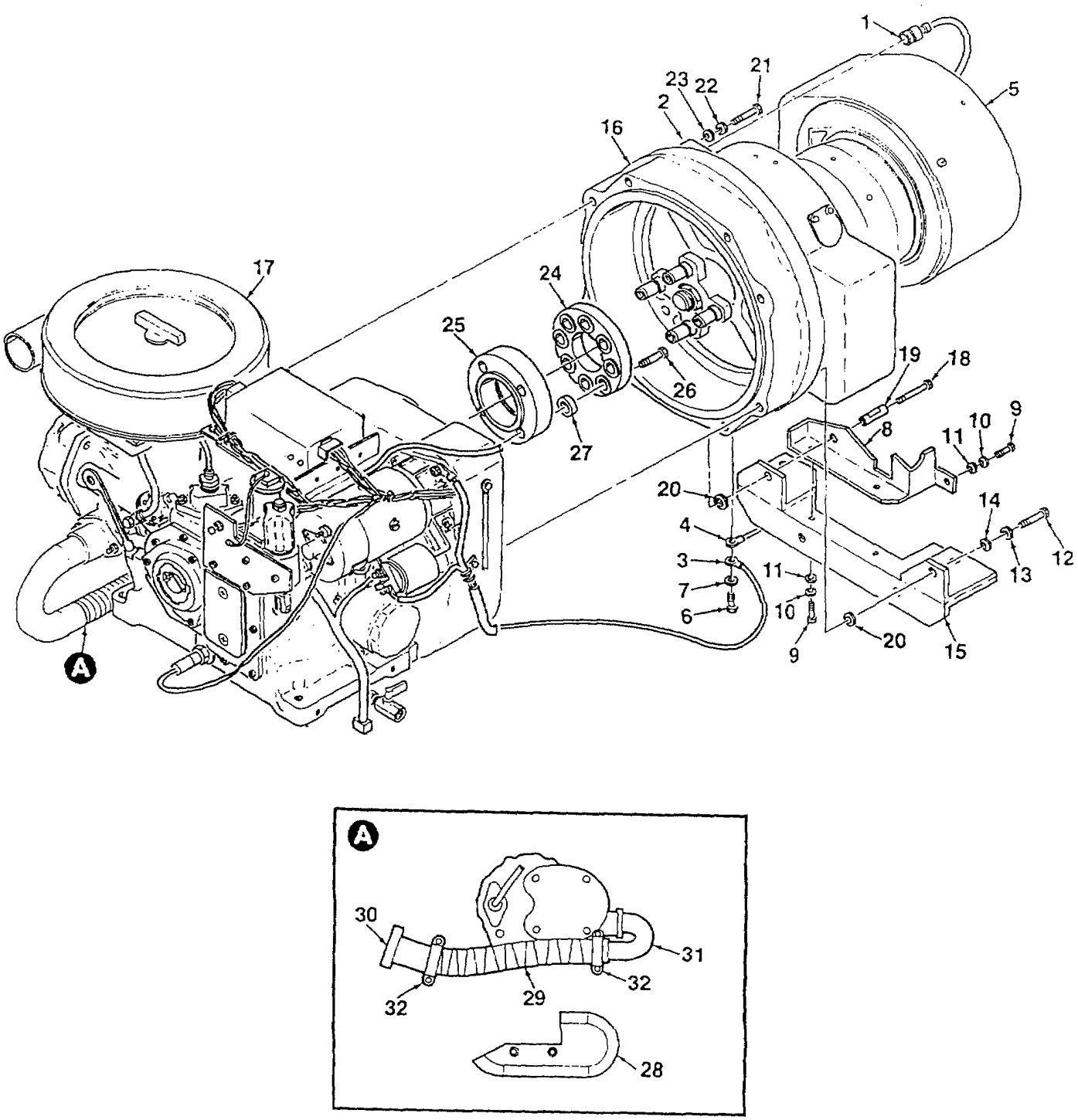

Figure 5-2. Engine Assembly
(Sheet 2 of 3)

C. INSTALLATION.

1. If engine has been replaced, install all components removed in REMOVAL, step 11.

NOTE

Perform steps 2 and 3 only if engine has been replaced.

2. Install engine exhaust pipe (31, Figure 5-2). Connect flexible exhaust hose (29) to adapter pipe (30) and engine exhaust pipe. Secure using clamps (32).

3. Install exhaust pipe cover (28) onto engine exhaust piping. Use lockwire to secure.

4. Install rubber coupling (24) and metal spacer (25) onto flywheel on engine (17) using four screws (26) and spacer washers (27). Washers are installed between coupling and spacer.

WARNING

Alternator is heavy and awkward. Enlist the help of an assistant when removing to prevent injury to personnel and damage to components.

5. Mate alternator (5) to engine (17). Sleeves in coupling on alternator shaft fit into holes in rubber coupling (24).

6. Support flywheel housing (16) and attach housing to engine (17) using four screws (21), lockwashers (22), and washers (23).

7. Insert four washers (20) into flywheel housing recesses. Attach flywheel housing (16) and alternator mounting bracket (15) to engine (17) using three screws (12), lockwashers (13), and washers (14). Install allen head bolt (18) and spacer (19).
8. Install alternator air block (8) using three screws (9), lockwashers (10), and washers (11).

9. Connect starter ground cable (3) and alternator ground cable (4) to ground terminal using screw (6) and lockwasher (7).

10. Connect electrical connector (1) to alternator receptacle (2).

11. Install assembled engine and alternator into APU (Para. 5-7).

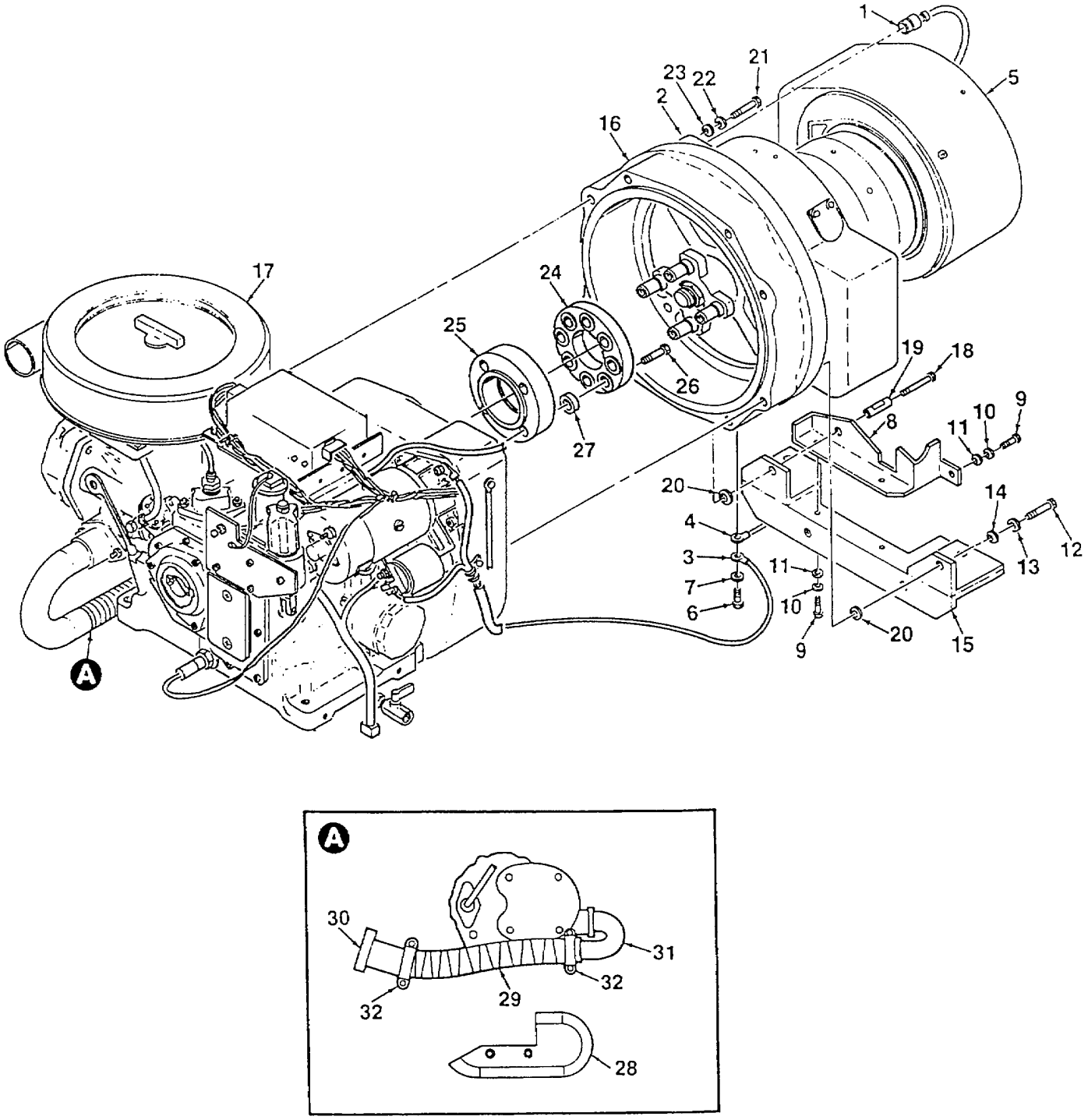

Figure 5-2. Engine Assembly
(Sheet 3 of 3)

5-9. CYLINDER HEAD MAINTENANCE

This task covers removal, inspection, repair, and installation

INITIAL SETUP

Tools:
Shop Equipment, Automotive Maintenance and Repair (Item 4, App. B)

Parts/Materials:
Loctite Adhesive (Item 1, App. E)
Cleaning Solvent, PD-680 (Item 9, App. E)
Grease (Item 5, App. E)

Equipment Condition:
Engine Exhaust Bellows Removed (Para. 4-42)
Engine Air Filter Removed (Para. 4-43)
Rocker Cover Removed (Para. 4-47)
Fuel Injector Removed (Para. 4-48)
Mechanical Fuel Pump Removed (Para. 4-55)

A. REMOVAL.

1. Disconnect oil line (17, Figure 5-3) from cylinder head (7) by removing banjo bolt (15) and washers (16). Disconnect crankcase pressure line.

2. Turn engine flywheel to top dead center (TDC) position, matching marks on the flywheel and crankcase.

3. Loosen nut (6) on inlet rocker arm (2).

4. Remove retaining washers (1) from rocker bolt (4). Press rocker bolt out of cylinder head (7) and remove rocker arms (2, 3).

NOTE

Adjusting screw (5), nut (6), and rocker arm (2 or 3) are supplied as a set. Replace entire assembly if required.

WARNING

Spring plates are under spring pressure and can act as projectiles when released. Use caution when removing valve cotters to prevent injury. Eye protection is required.

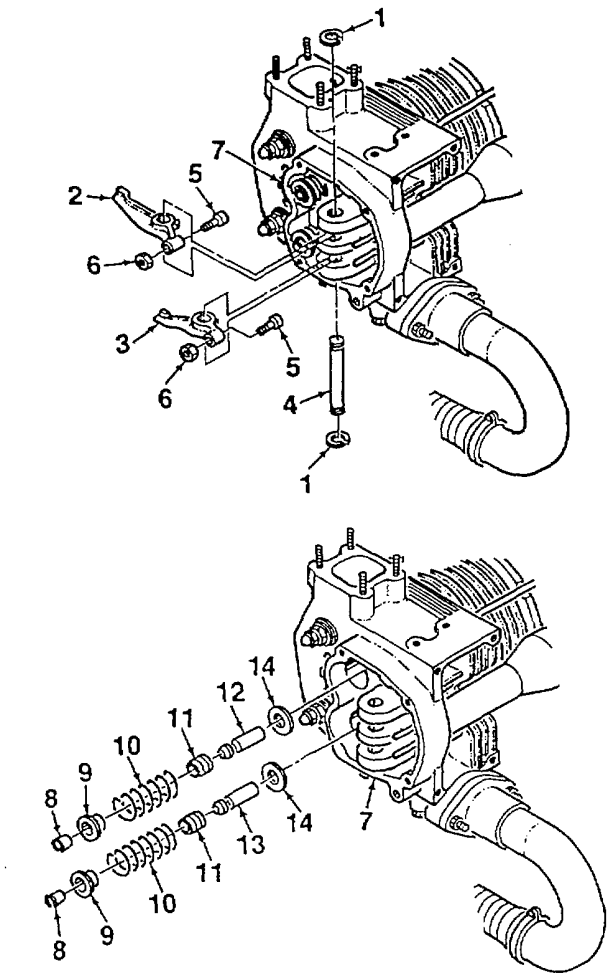

Figure 5-3. Cylinder Head (Sheet 1 of 7)

5-9. CYLINDER HEAD MAINTENANCE

5. Compress spring (10) by pressing down on spring plate (9). Remove valve cotter (8) and slowly release spring plate to remove pressure. Repeat with second valve spring.

6. Remove spring plates (9), springs (10), and valve seals (11) from valve guides (12, 13). Do not remove valve guides and washers (14) from cylinder head (7) at this time.

7. Disconnect engine exhaust tube (18) from flanged air pipe (20) by loosening hose clamp (19). Remove flanged pipe from manifold studs (22) by removing nuts (21). Remove gasket (45).

8. Remove exhaust manifold (23) from cylinder head (7) by removing two each screws (24, 25) and washers (26, 27). Remove and discard gasket (28).

9. Remove cap nuts (29). Loosen four nuts (30) in a criss-cross pattern and remove nuts and washers (31). Remove push rods (38, 39).

10. Carefully remove cylinder head (7) from head mounting studs. Place on a suitable work surface for further maintenance.

11. Make a temporary mark on tappet guide (41), push rod tube (32), and cylinder head (7) to indicate tube orientation. Remove push rod tube. Remove and discard O-ring seal (33).

12. Remove gasket (34) from cylinder head (7) and discard. Ensure all gasket material is removed from both the cylinder head and engine block.

13. Slide inlet valve (35) and outlet valve (36) out of valve guides.

14. Remove tappet guide (41) by removing screws (42). Remove tappets (44). Remove and discard gasket (43) and O-ring seal (40).

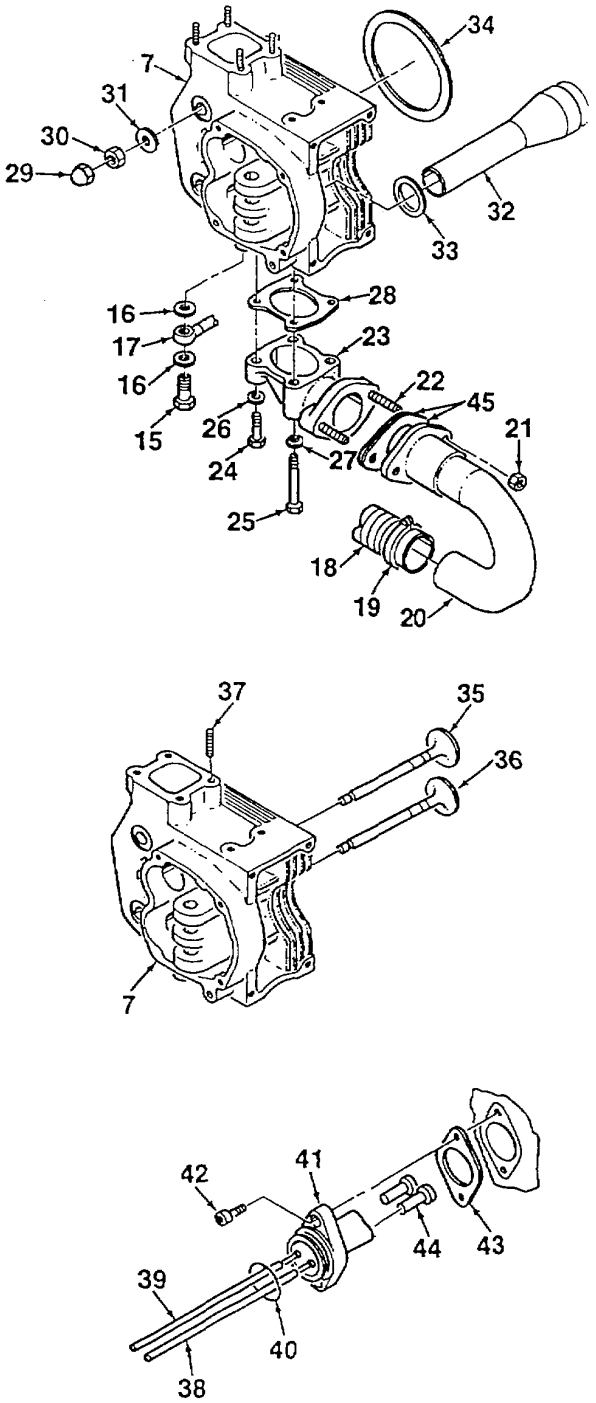

Figure 5-3. Cylinder Head (Sheet 2 of 7)

5-9. CYLINDER HEAD MAINTENANCE

B. INSPECTION.

WARNING

Cleaning solvent, PD-680, is potentially dangerous to personnel and property. Skin and eye protection is required. Good ventilation is required. Avoid repeated and pro-longed skin contact. Do not use near open flame or excessive heat. Flash point is 200° F (93.3° C).

1. Prior to inspecting, clean all parts in cleaning solvent and allow to dry thoroughly.

2. Using a caliper, measure the ID of the rocker arm bore (dimension A). ID shall not exceed 14.050 mm (0.5536 in.). Replace rocker arm if worn beyond limit.

3. Measure the OD of the rocker arm bolt (dimension B). OD shall not be less than 13.955 mm (0.5498 in.). Replace rocker arm bolt if worn beyond limit.

4. Measure the ID of the rocker bolt bore in the cylinder head (dimension C). ID shall not exceed 14.060 mm (0.5540 in.). Replace cylinder head if worn beyond limit.

5 Inspect rocker arms for cracks or scoring of the bore surface. Inspect rocker arm bolt for scoring or other damage. Replace damaged components.

6. Inspect push rods for straightness. Inspect for scoring or other damaged. Replace damaged push rods.

7. Inspect valve springs for cracks, broken sections, or deformation. Replace if damaged or deformed.

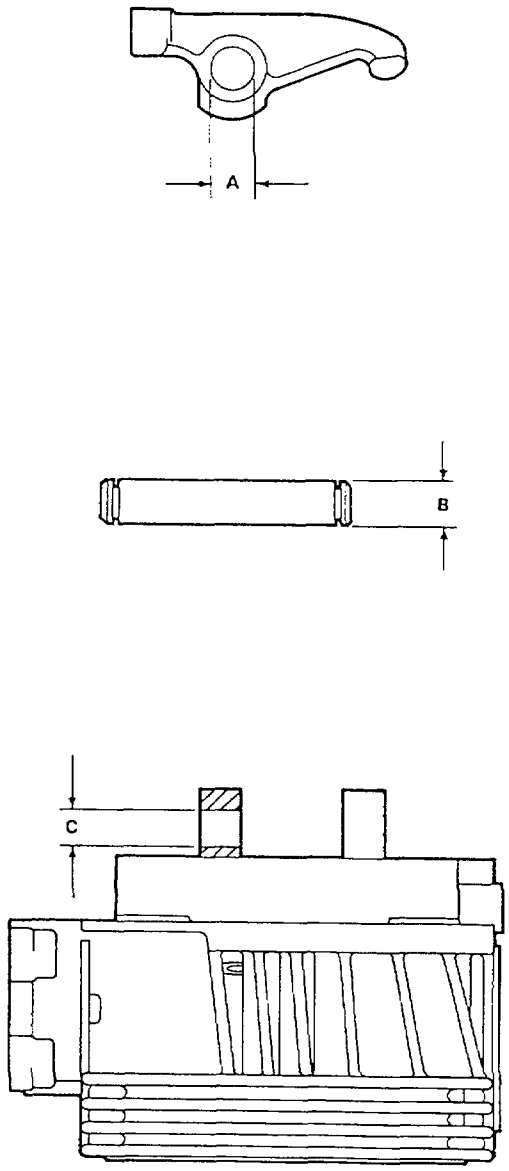

Figure 5-3. Cylinder Head (Sheet 3 of 7)

8. Inspect valves for scoring on the 45° face surface.

9. Inspect stems of valves and valve guides as follows:

   a. Install exhaust valve in cylinder head with stem extending fully through the valve guide.

   b. Place a dial indicator along the side surface of the valve stem, right at the tip of the stem. Shift the valve stem laterally and note the amount of movement. If movement exceeds 0.15 mm (0.0059 in.), both the valve and the valve guide must be replaced.

   c. Repeat steps a. and b. for the intake valve and valve guide.

10. Measure cylinder head dimensions D, E, F. Replace cylinder head if any dimension is beyond limit.

    a. Dimension D = 11.985 to 11.974 mm (0.4722 to 0.4718 in.)

    b. Dimension E = 109.150 to 109.200 mm (4.300 to 4.302 in.)

    c. Dimension F = 5.000 to 5.100 mm (0.1970 to 0.2010 in.)

11. Measure outlet valve dimensions G and H. Measure inlet dimensions G and I. Replace valve if any dimension is beyond limit.

    a. Dimension G = 7.918 to 7.930 mm (0.3120 to 0.3124 in.)

    b. Dimension H = 38.150 to 41.850 mm (1.5031 to 1.6489 in.)

    c. Dimension I = 41.850 to 42.150 mm (1.6489 to 1.6607 in.)

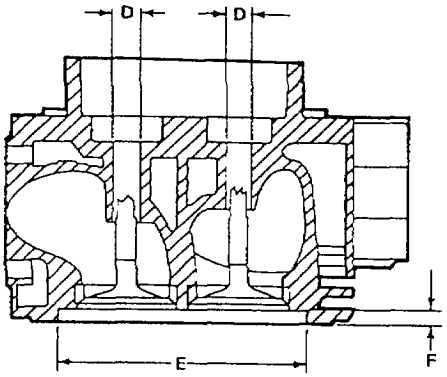

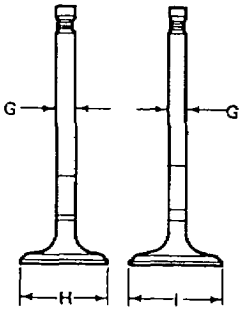

Figure 5-3. Cylinder Head (Sheet 4 of 7)

5-9. CYLINDER HEAD MAINTENANCE

C. REPAIR.

1. Slight scoring of a valve face may be removed by grinding valves with valve grinding machine. Dimensions G, H, and I must be maintained. Replace valves if grinding results in dimensions beyond limits.

2. Replace valve guides as follows:

   a. Drive valve guides from cylinder head using an arbor press and pressing rod (9.0 mm diameter).

CAUTION

When installing a replacement valve guide, you must ensure that the guide is aligned square with the bore of the cylinder head. Damage to the guide and cylinder head will occur if guide is installed at even a slight angle.

   b. Install replacement valve guide into cylinder head using an arbor press and pressing rod. Guide is installed with stepped shoulder up. Press guide until shoulder of guide is bottomed against casting.

D. INSTALLATION.

1. Mate new gasket (43, Figure 5-3) onto tappet guide (41). Install tappets (44).

2. Install tappet guide (41) into engine block. Apply a thin coat of loctite sealant to threads of screws (42) and install screws. Torque screws to 15 to 17 ft-lbs (20 to 23 Nm).

3. Apply a light coat of grease to new O-ring seal (40). Install seal onto tappet guide (41).

4. Align marks on push rod tube (32) and cylinder head (7). Install tube onto tappet guide (41). Apply a light coat of grease to new O-ring seal (33) and in tall seal into cylinder head (7).

5. If removed, install studs (37) into cylinder head (7).

6. Carefully install inlet valve (35) and outlet valve (36) into valve guides in cylinder head (7). Ensure valves slide freely in guides.

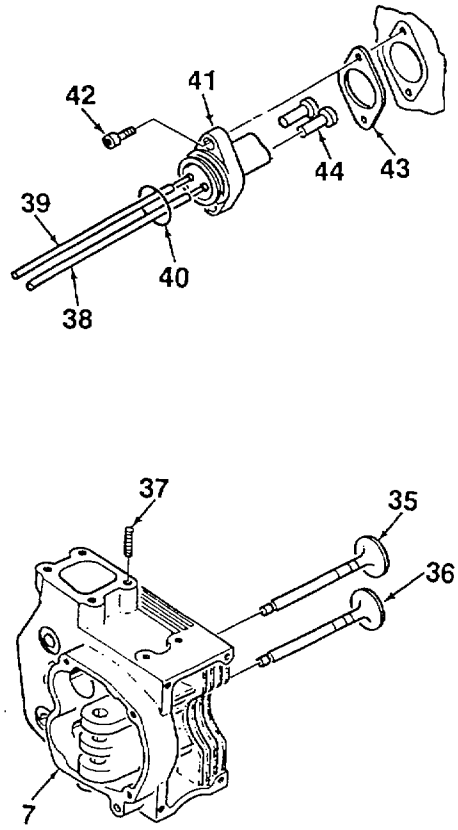

Figure 5-3. Cylinder Head (Sheet 5 of 7)

5-9. CYLINDER HEAD MAINTENANCE

7. Apply grease to new head gasket (34) and install gasket into cylinder head (7) groove.

8. Turn flywheel to top dead center (TDC) position, matching marks on the flywheel and crankcase.

9. Carefully install cylinder head (7) over mounting studs until bottomed against engine block. Ensure push rod tube (32) is properly seated in cylinder head so that alignment marks match.

10. Install washers (31) and nuts (30) onto cylinder head mounting studs. Torque nuts in a criss-cross pattern to 38.5 to 41.5 ft-lbs (52 to 56 Nm). Install cap nuts (29).

11. Mate new gasket (28) to exhaust manifold (23). Install manifold onto cylinder head (7) using screws (24, 25) and washers (26, 27).

12. Install flanged air pipe (20) to exhaust manifold studs (22) using nuts (21). Connect engine air tube (18) and tighten hose clamp (19).

13. Attach oil hose (17) to cylinder head (7) using banjo bolt (15) and washers (16).

14. Install valve seals (11), springs (10), and spring plates (9) onto valve guides (12, 13).

WARNING

Spring plates are under spring pressure and can act as projectiles during installation. Use caution when installing valve cotters to prevent injury. Eye protection is required.

15. Compress spring (10) and install valve cotter (8). Slowly release spring plate to ensure proper cotter installation. Repeat with second valve spring.

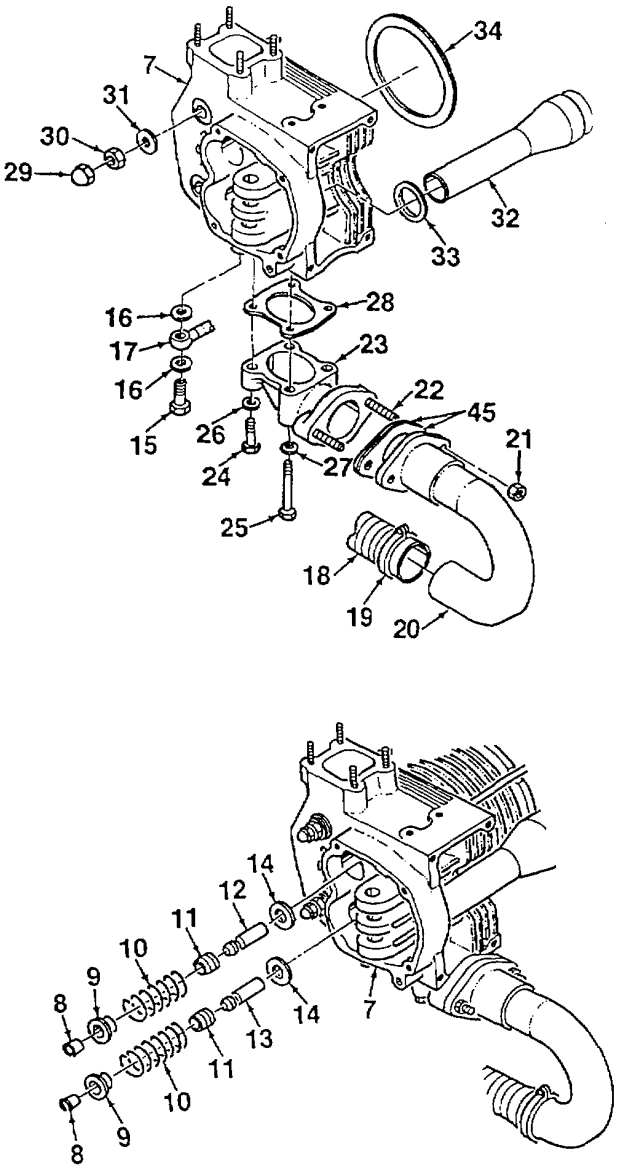

Figure 5-3. Cylinder Head (Sheet 6 of 7)

5-9. CYLINDER HEAD MAINTENANCE

16. Ensure adjusting screws (5) and nuts (6) are installed in their rocker arms (2 or 3). Screws, nuts, and arms are supplied as an assembly, and should not be separated.

17. Insert push rods (38, 39) into tappet guide (41). The tapered ends of the push rods are installed into the tappet guide with shorter inlet push rod (39) installed adjacent to cylinder.

18. Install rocker arms (2, 3) into cylinder head (7). Install rocker bolt (4) and secure using retaining washers (1).

19. Install mechanical fuel pump (Para. 4-55).

20. Install fuel injector (Para. 4-48).

21. Install engine air filter (Para. 4-43).

22. Install engine exhaust bellows (Para. 4-42).

23. Adjust valve clearance (Para. 4-47).

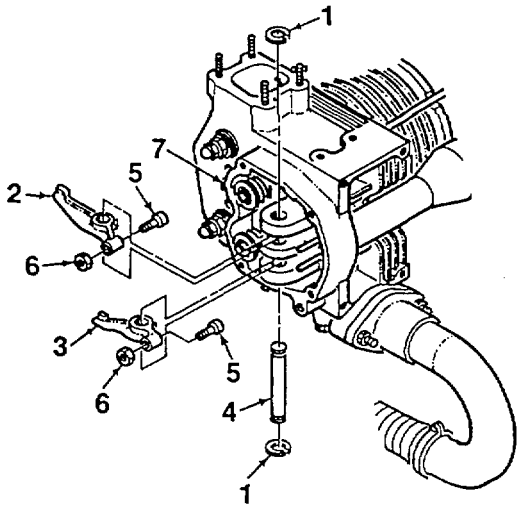

Figure 5-3. Cylinder Head (Sheet 7 of 7)

5-10. FUEL INJECTION PUMP MAINTENANCE

This task covers removal, inspection, and installation

INITIAL SETUP

Tools:
Shop Equipment, Automotive Maintenance and Repair (Item 4. App. B)

Parts/Materials:
Cleaning Solvent, PD-680 (Item 9, App. E)

Equipment Condition:
APU Shut Down
NATO Plug Disconnected

A. REMOVAL.

CAUTION

Prevent delivery valve from rotating during fuel pipe removal to prevent damage to internal O-ring.

NOTE

The thickness of fuel injection pump shims is imprinted on the surface of the engine block, next to the injection pump. The same thickness of shims must be maintained when replacing the injection pump.

1. Hold delivery valve (1, Figure 5-4) in place using a wrench. Disconnect fuel pipe (2) from fuel injection pump (3).

2. Disconnect fuel line (4) from fuel injection pump (3) by removing banjo bolt (5) and washers (6).

3. Loosen nuts (7). Rotate engine flywheel to relieve pressure on fuel injection pump.

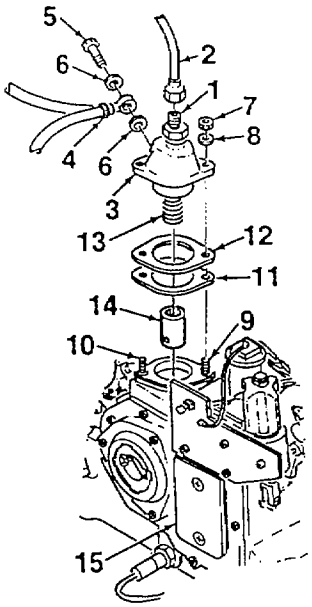

Figure 5-4. Fuel Injection Pump (Sheet 1 of 2)

5-10. FUEL INJECTION PUMP MAINTENANCE

WARNING

Fuel injection pump is under pressure. Ensure flywheel position is adjusted to reduce pressure to a minimum before removing pump.

4. Remove nuts (7) and washers (8) from studs (9, 10). Carefully lift fuel injection pump (3) out of engine block and place on a suitable work surface.

CAUTION

Make sure to retain shims (12) when removed. If shims are lost, fuel pump will not function properly.

5. Remove shim(s) (12) and retain. Remove pump gasket (11) only if replacement is required.

6. Remove studs (9, 10) only if replacement is required. Note positions of long and short stud before removing.

B. INSPECTION.

WARNING

Cleaning solvent, PD-680, is potentially dangerous to personnel and property. Skin and eye protection is required. Good ventilation is required. Avoid repeated and prolonged skin contact. Do not use near open flame or excessive heat. Flash point is 200° F (93.3° C).

1. Clean exterior of fuel injection pump using a clean rag dampened with cleaning solvent. Dry thoroughly.

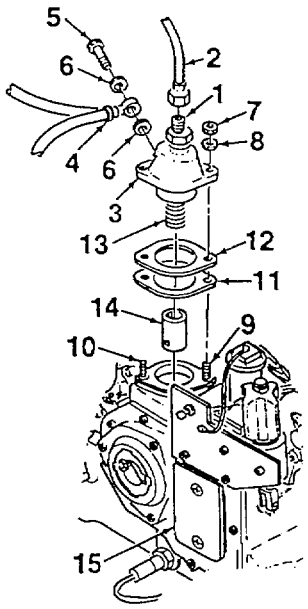

Figure 5-4. Fuel Injection Pump (Sheet 2 of 2)

2. Clean engine block mounting surface using a clean rag dampened with cleaning solvent. Ensure that all gasket material is removed from engine block.

3. Inspect fuel injection pump for signs of wear or other obvious damage. Replace injection pump if damage is suspected.

C. INSTALLATION.

1. If removed, install studs (9, 10, Figure 5-4). Long stud (9) is installed in hole closest to oil filler.

2. Install new paper gasket (11) onto studs (9, 10). Install shim(s) (12). Shim thickness must match thickness imprinted on engine block.

3. Place the engine acceleration lever in the full load position. Manually rotate the flywheel until roller tappet (19) is in the bottom dead center (BCD) position.

4. Move the pin on the injection pump regulating lug to the full quantity position.

5. Carefully install injection pump (3) into engine block, making sure that the pump lug pin engages in the slot on the transverse lever of the control rod assembly. Observe that pin is engaged when viewed through access hole with cover removed.

6. Secure injection pump (3) using nuts (7) and washers (8). Torque nuts evenly to 15 to 17 ft-lbs (20 to 23 Nm).

7. Connect fuel line (4) to injection pump (3) using banjo bolt (5) and washers (6).

8. Depress solenoid to maximum speed position.

9. Turn engine using crank handle until fuel appears at the top of delivery valve (1).

10. Release solenoid. Fuel flow shall stop.

11. Connect fuel pipe (2) to delivery valve (1). Torque pipe nut to 13.5 to 16 ft-lbs (18 to 22 Nm).

5-11. OIL PUMP MAINTENANCE

This task covers removal, inspection, and installation

INITIAL SETUP

Tools:
Shop Equipment, Automotive Maintenance and Repair (Item 4, App. B)

Parts/Materials:
Lubricating Oil (Item 10, App. E)

Equipment Condition:
Camshaft Removed (Para. 5-12)

A. REMOVAL.

Remove oil pump (1, Figure 5-5) from engine block by removing screws (2) and washers (3). Ensure locking plate (4) is retained with pump.

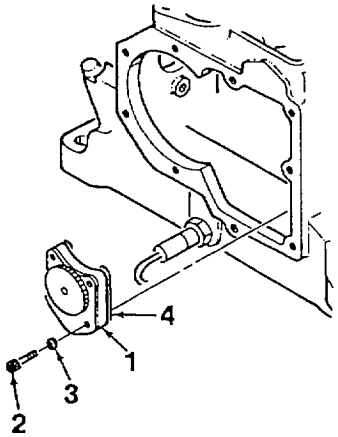

Figure 5-5. Oil Pump

B. INSPECTION.

1. Inspect pump gear on front side and internal gears on reverse side by rotating the gear by hand. Observe for broken teeth or excessive wear on the teeth. Check for binding. Replace the pump if gear is damaged or binding.

2. Inspect crankshaft gear teeth for damage. Remove and replace the crankshaft (Para. 5-15) if required.

C. INSTALLATION.

1. Dip oil pump (1) in lubricating oil. Install oil pump and locking plate (4), making sure that the protruding part of the pump shaft is received by the index bore. If properly installed, the pump will lie flat against the rear wall of control housing without a gap.

2. Secure oil pump (1) and locking plate (4) using screws (2) and washers (3). Torque screws to 7.5 to 8.5 ft-lbs (10 to 12 Nm). Check gear backlash between the oil pump and crankshaft gear wheel. There must be rotary play in the tooth contact engagement.

3. Install camshaft (Para. 5-12).

5-12. CAMSHAFT MAINTENANCE

This task covers removal, inspection, and installation

INITIAL SETUP

Tools:
Shop Equipment, Automotive Maintenance and Repair (Item 4, App. B)

Parts/Materials:
Loctite Adhesive (Item 1, App. E)
Cleaning Solvent, PD-680 (Item 9, App. E)

Equipment Condition:
Engine Removed (Para. 5-8)
Engine Start Solenoid Removed (Para. 4-45)
Mechanical Fuel Pump Removed (Para. 4-55)
Cylinder Head Removed (Para. 5-9)
Fuel Injection Pump Removed (Para. 5-10)

A. REMOVAL.

NOTE

Remove crank handle guide (1, Figure 5-6) only if inspection of oil seal (4) is required.

1. Remove crank handle guide (1) from camshaft assembly (3) by removing three screws (2).

2. Remove cover (9) and gasket (10) by removing two screws (8). Discard gasket.

3. Remove camshaft assembly (3) from engine block (7) by removing seven screws (5). Remove and discard gasket (6).

B. INSPECTION.

WARNING

Cleaning solvent, PD-680, is potentially dangerous to personnel and property. Skin and eye protection is required. Good ventilation is required. Avoid repeated and prolonged skin contact. Do not use near open flame or excessive heat. Flash point is 200° F (93.3° C).

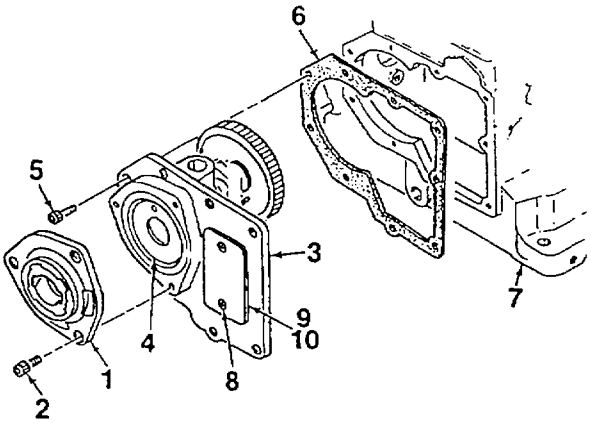

Figure 5-6. Camshaft (Sheet 1 of 2)

5-12. CAMSHAFT MAINTENANCE

1. Clean exterior of camshaft assembly using a clean rag dampened with cleaning solvent. Dry thoroughly.

2. Clean engine block mounting surface using a clean rag dampened with cleaning solvent. Ensure that all gasket material is removed from engine block.

3. Inspect the camshaft for scoring on bearing surfaces and surfaces of cam lobes. Replace the camshaft assembly if scored in any way.

4. Inspect teeth of camshaft gear for scoring or excessive wear. Check for chips, cracks, and nicks.

C. INSTALLATION.

1. Mate new gaskets (6, 10, Figure 5-6) to camshaft assembly (3).

2. Manually rotate the flywheel to top dead center (TDC) position. Install the camshaft assembly (3), making sure that the timing marks on the camshaft gear wheel (12) and crankshaft gear wheel (11) are aligned.

3. Apply a thin coat of loctite compound to threads of screws (5) and install in a crisscross pattern.

4. Install cover (9) using two screws (8).

5. Mate crank handle guide (1) to camshaft assembly (3). Secure using screws (2).

6. Install fuel injection pump (Para. 5-10) and cylinder head (Para. 5-9).

7. Install mechanical fuel pump (Para. 4-55) and engine start solenoid (Para. 4-45).

8. Install engine (Para. 5-8).

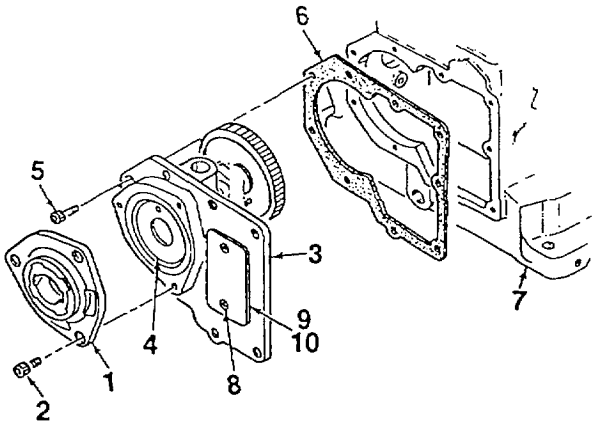

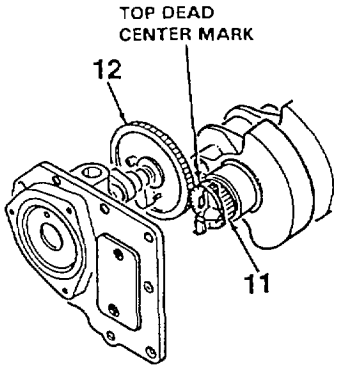

Figure 5-6. Camshaft (Sheet 2 of 2)

5-13. SPEED CONTROL AND PRIMER ASSEMBLY MAINTENANCE

This task covers removal, inspection, and installation

INITIAL SETUP

Tools:
Shop Equipment, Automotive Maintenance and Repair (Item 4, App. B)
Governor Adjustment Tool (Item 5, App. B)

Parts/Materials:
Cleaning Solvent, PD-680 (Item 9, App. E)

Equipment Condition:
Camshaft Assembly Removed (Para. 5-12)
Oil Filler Removed (Para. 4-53)

A. REMOVAL

1. Unscrew right hand injection pump stud (1, Figure 5-7) until transverse lever (2) is released.

2. Remove nut (3), lockwasher (4), and threaded pin (5) from eccentric shaft (6).

3. Hold threaded pin (7) in place using an alien wrench. Remove collar nut (8) and washer (9) from threaded pin.

4. Measure and record Dimension A.

5. Screw threaded pin (7) into the engine block until flange bolt (10) on primer assembly control lever (11) disengages from the segment.

6. Screw threaded pin (7) out until it protrudes approximately 5 mm (3/16 in.) from surface of engine block.

7. Unhook small spring from primer assembly control lever (11). Remove threaded pin (12) and nut (13).

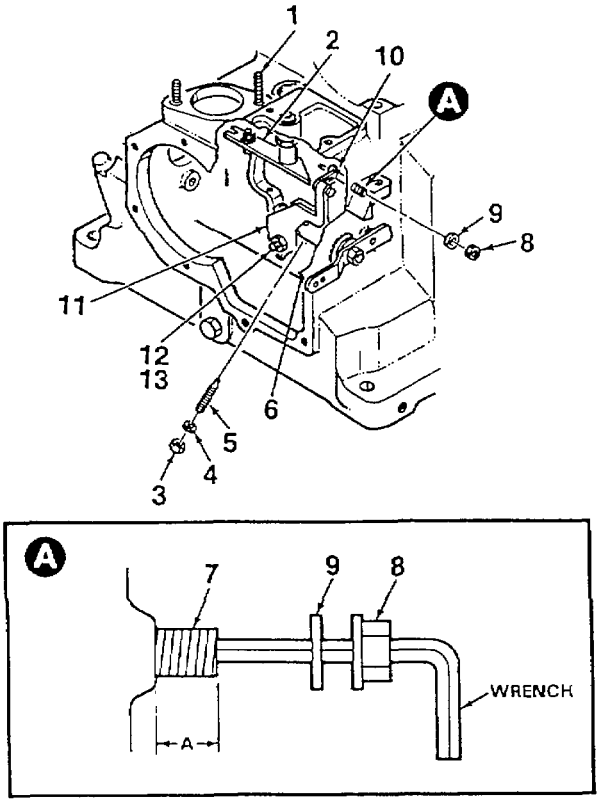

Figure 5-7. Speed Control and Primer (Sheet 1 of 5)

5-13. SPEED CONTROL AND PRIMER ASSEMBLY MAINTENANCE

8. Using governor adjustment tool, loosen bushing (14, located in speed control lever (15)) by 3 revolutions.

9. Remove retaining clip (17) from speed control eccentric shaft (18). Rotate shaft in the stop direction until return spring (16) is unhooked. Remove shaft as an assembly from engine block (19). Place on a suitable work surface for further maintenance.

10. Remove lever (20) and attaching parts on if damaged by removing nut (21) and washer (22).

11. Remove bolt (24) and bushing (25) from speed control lever (15). Remove primer assembly (26).

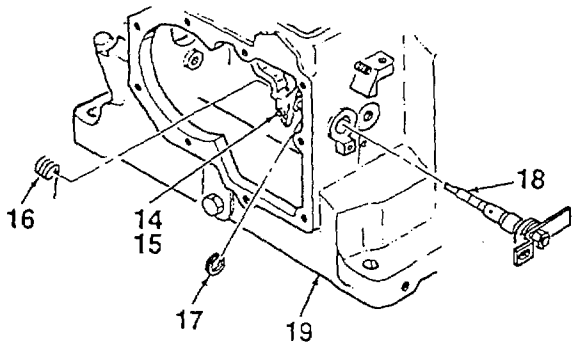

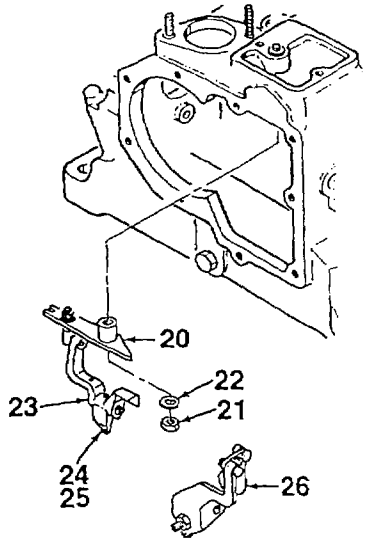

Figure 5-7. Speed Control and Primer (Sheet 2 of 5)

12. Remove nut (27), washer (28), and acceleration lever (29) from speed control eccentric shaft (18). Remove spacer ring (30).

B. INSPECTION.

WARNING

Cleaning solvent, PD-680, is potentially dangerous to personnel and property. Skin and eye protection and good ventilation are required. Avoid repeated and prolonged skin contact. Do not use near open flame or excessive heat. Flash point is 200° F (93.3° C).

1. Clean all parts in cleaning solvent and dry thoroughly.

2. Visually inspect all parts for signs of broken or deformed condition. Replace any part that is damaged or defective.

3. Inspect control levers and control plate for cracks. Replace any part that is cracked.

4. Using a caliper, measure diameter of eccentric shaft at widest point. Diameter shall be 16.000 mm minimum (0.630 in.). Replace eccentric shaft if worn beyond limit.

5. Inspect springs for cracks, breaks, or deformation. Replace suspect springs.

C. INSTALLATION.

1. Install spacer ring (30, Figure 5-7) and acceleration lever (29) onto speed control eccentric shaft (18). Secure using nut (27) and washer (28).

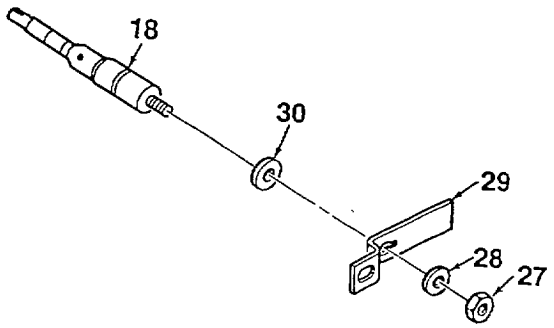

Figure 5-7. Speed Control and Primer (Sheet 3 of 5)

2. Screw bushing (25) into speed control lever (15) until bushing is flush with rear side of lever. Push bolt (24) into bushing.

3. Insert the leg of return spring (16) up into hole in speed control lever (15). Bend leg 15° towards middle of lever to hold in place.

4. Place primer assembly control lever (11) over speed control lever (15). Hold levers in place in engine block (19).

5. Hold acceleration lever (29) in the stop position and insert speed control eccentric shaft (18) through bushing in side of engine block (19).

6. Push levers (11, 15) onto eccentric shaft (18). Return spring (16) shall fit into eccentric shaft slot without resistance.

7. Turn acceleration lever (29) to full load position.

8. Rotate speed control eccentric shaft (18) while pulling it slightly out of the engine block bushing. Press speed control control lever (15) in the direction of the crankcase wall until the pin on lever (15) engages in the fork pin of lever (24).

9. Push eccentric shaft (18) back into bushing and secure using retaining clip (17).

10. Turn acceleration lever (29) to the full load position.

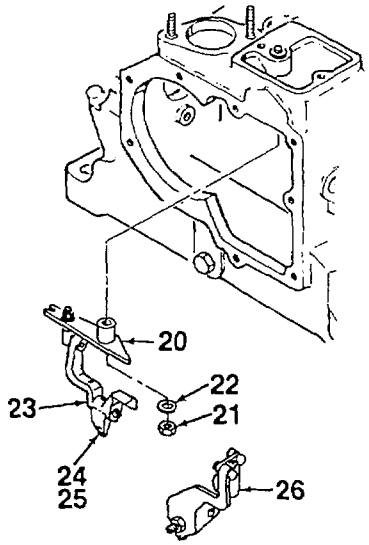

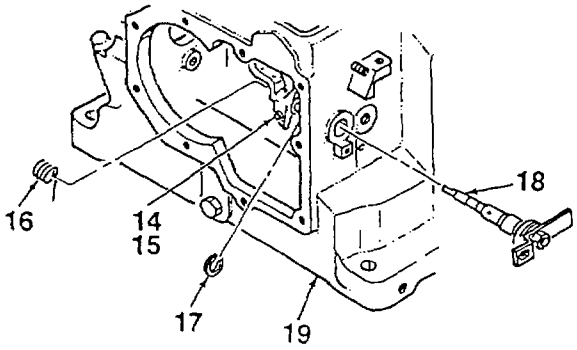

Figure 5-7. Speed Control and Primer (Sheet 4 of 5)

11. Screw threaded pin (7) into the engine block to move flange bolt (10) into the bore of the segment.

12. Using an allen wrench, screw threaded pin (7) out of engine block until it reaches position measured during REMOVAL, step 4. Hold threaded pin in position and install collar nut (8) and washer (9).

13. Screw in right hand injection pump stud (1).

14. Set speed control end stop as follows:

    a. Move acceleration lever (29) to the stop position.

    b. Install threaded pin (5) into eccentric shaft (6). Screw in pin until contact is made with rear control lever.

    c. Lock threaded pin (5) in place using nut (3) and washer (4).

15. Set speed control starting position as follows:

    a. Move acceleration lever (29) to the full load position. Spread governor weights to the maximum extended position using the governor adjustment tool.

    b. Screw bushing (25) into speed control lever (15) until flange bolt fits on governor pin with no play. Tighten bushing an additional 1/2 revolution. Remove tool.

    c. Hook small spring onto primer assembly control lever (11).

    d. Screw threaded pin (12) in until it contacts push bolt (24). Secure using nut (13).

20. Install camshaft assembly (Para. 5-12) and oil filler (Para. 4-53).

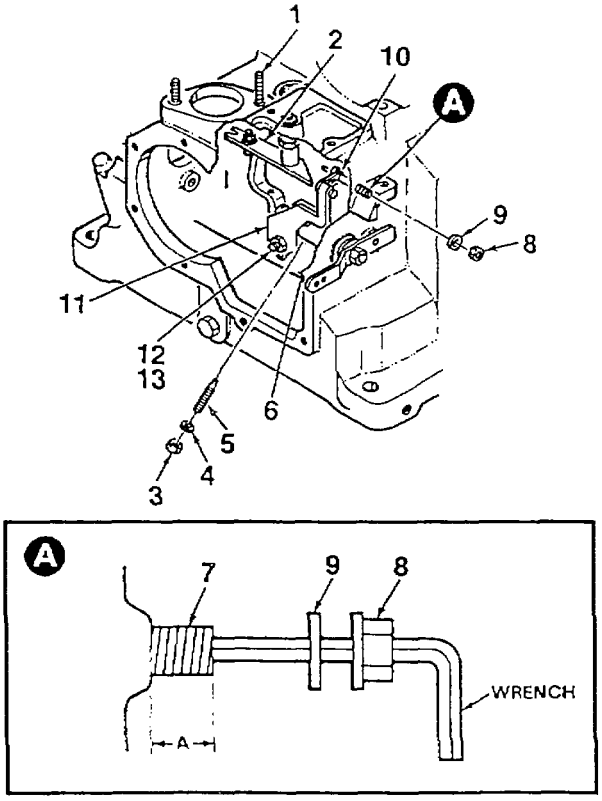

Figure 5-7. Speed Control and Primer (Sheet 5 of 5)

5-14. FLYWHEEL AND RING GEAR MAINTENANCE

This task covers removal, inspection, and installation

INITIAL SETUP

Tools:
Shop Equipment, Automotive Maintenance and Repair (Item 4, App. B)

Parts/Materials:
Cleaning Solvent, PD-680 (Item 9, App. E)
Screw, M8 x 40 (2 each)
Screw, M6 (2 each)

Equipment Condition:
Engine Removed (Para. 5-8)

Personnel Required:
2 personnel

A. REMOVAL

WARNING

Flywheel weighs approximately 80 pounds. Removing nut will allows flywheel to fall off crankshaft. Enlist an assistant when removing to prevent injury and damage to equipment.

1. Loosen, but do not remove flywheel nut (1, Figure 5-8).

2. Using a flywheel puller, loosen flywheel (2). Remove flywheel nut (1). Rotate flywheel until key on crankshaft is in top position, then remove flywheel.

3. Remove belleville washers (3). Install two M6 screws into holes in angle ring (4). Remove angle ring by pulling on screws. Remove O-ring seal (5).

4. Remove six nuts (7) and washers (8) that secure bearing cover (9) to mounting studs. Install two M8 x 40 screws into holes on opposite sides of bearing cover. Pull screws to separate cover from engine block.

5. Using two screwdrivers, pry oil seal (6) from bearing cover (9). Discard oil seal.

6. Remove and discard cover gasket (10).

B. INSPECTION.

WARNING

Cleaning solvent, PD-680, is potentially dangerous to personnel and property. Skin and eye protection is required. Good ventilation is required. Avoid repeated and prolonged skin contact. Do not use near open flame or excessive heat. Flash point is 200° F (93.3° C).

5-14. FLYWHEEL AND RING GEAR MAINTENANCE

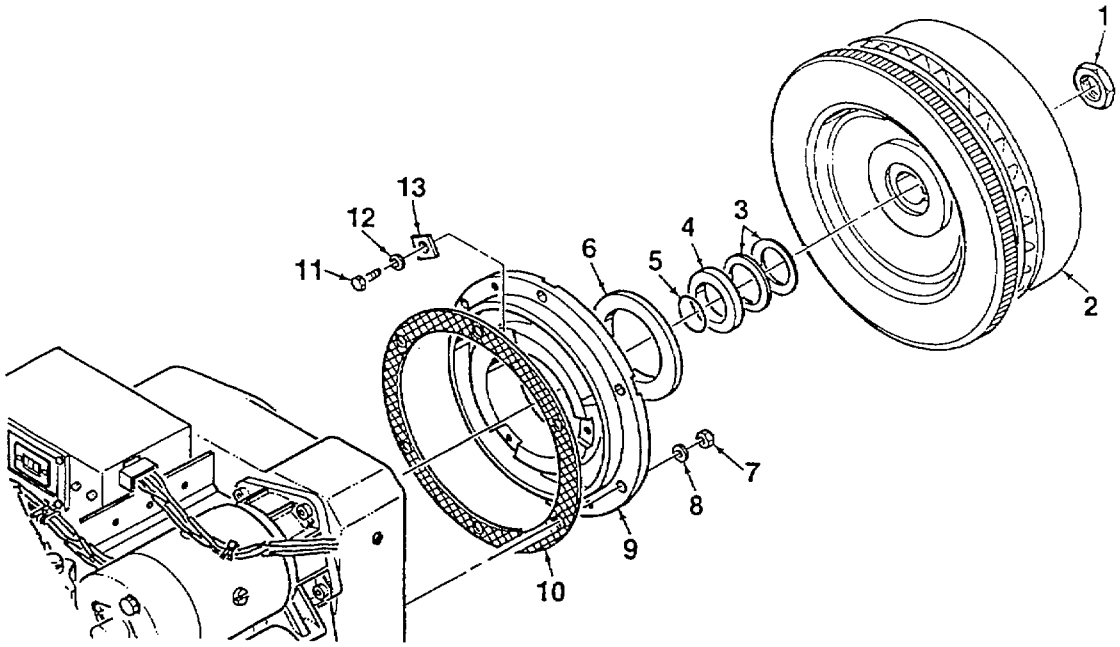

Figure 5-8. Flywheel and Ring Gear

1. Clean all parts in cleaning solvent and dry thoroughly. Clean engine block mounting surface using a clean rag dampened with cleaning solvent. Ensure that all cover gasket material is removed from engine block.

2. Inspect flywheel ring gear teeth for damage. Check for chipped, cracked, or missing teeth. Look for signs of excessive or unusual wear. Replace flywheel and ring gear as an assembly if damaged.

3. Inspect flywheel crankshaft bore for damage. Check for scoring. Inspect end of crankshaft for damage. Ensure crankshaft key is properly seated and free from dirt.

4. Conduct visual inspection of crankshaft belleville washers, angle ring, and bearing. Check for damage. Look for scoring or unusual wear.

C. INSTALLATION.

1. Mate new cover gasket (10, Figure 5-8) over mounting studs.

2. Install new oil seal (6), O-ring seal (5), angle ring (4), and belleville washers (3). Install one washer with dish facing out, and the second washer with the dish facing in.

3. Install bearing cover (9) over mounting studs and gently hammer into place using a rubber mallet. Install six nuts (7) and washers (8). Tighten nuts in a criss-cross pattern to ensure even cover installation.

4. Carefully slide flywheel (2) onto crankshaft, ensuring proper alignment of keyway. Install flywheel nut (1) and torque to 288 to 303 ft-lbs (390 to 410 Nm).

5-15. CYLINDER, PISTON, AND CRANKSHAFT MAINTENANCE

This task covers removal, inspection, repair, and installation

INITIAL SETUP

Tools:
Shop Equipment, Automotive Maintenance and Repair (Item 4, App. B)

Parts/Materials:
Cleaning Solvent, PD-680 (Item 9, App. E)
Lubricating Oil (Item 10, App. E)

Equipment Condition:
Cylinder Head Removed (Para. 5-9)

A. REMOVAL

1. Manually rotate the flywheel until the piston (5, Figure 5-9) reaches the bottom of its stroke.

2. Remove bottom half of connecting rod (1) from top half (2) by removing screws (3). Remove connecting rod halves and bearing shells (4) from crankshaft (16).

3. Manually crank the flywheel until piston (5) reaches the top of its stroke. Remove cylinder (6), piston (5), and connecting rod (2) as one unit. Separate piston from cylinder.

4. Using a drift punch, gently drive piston pin (8) out of piston (5). Remove piston.

5. Remove bushing (10) from top half of connecting rod (2) only if replacement is required.

6. Remove camshaft (Para. 5-12).

7. Remove governor pin (17) and governor (18) from crankshaft (16).

8. If installed, remove flywheel nut (11) from crankshaft (16). Remove belleville washers (12), angle ring (13), and O-ring seal (14). Discard O-ring seal.

9. Using a bearing puller, remove bearing (15). Remove crankshaft (16) from engine block and place on a suitable work surface.

10. Remove flywheel (Para. 5-14).

5-15. CYLINDER, PISTON, AND CRANKSHAFT MAINTENANCE

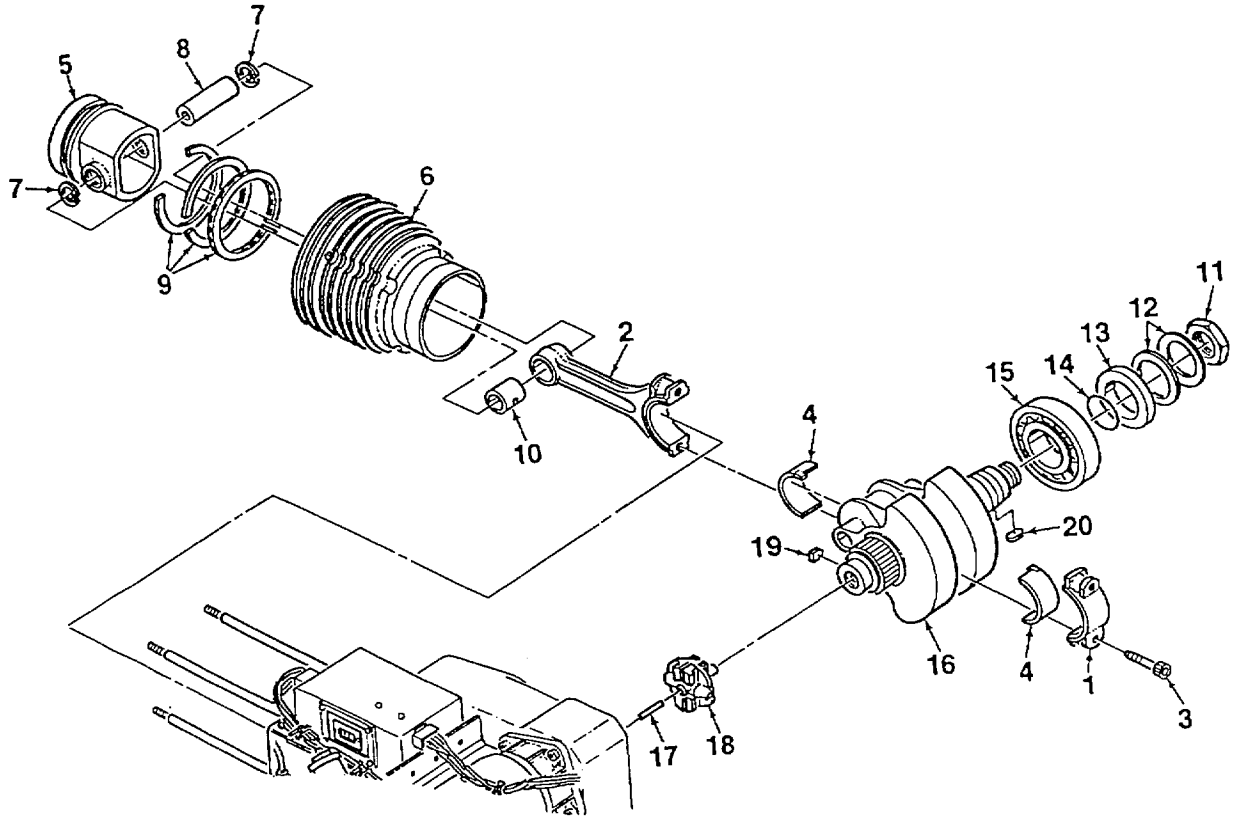

Figure 5-9. Cylinder, Piston, and Crankshaft (Sheet 1 of 5)

5-15. CYLINDER, PISTON, AND CRANKSHAFT MAINTENANCE

B. INSPECTION.

WARNING

Cleaning solvent, PD-680, is potentially dangerous to personnel and property. Skin and eye protection is required. Good ventilation is required. Avoid repeated and prolonged skin contact. Do not use near open flame or excessive heat. Flash point is 200° F (93.3° C).

1. Clean all parts in cleaning solvent and dry thoroughly.

2. Visually inspect the crankshaft for scoring on connecting rod journal, bearing journal, and gear journal. Replace crankshaft if any defects are found.

3. Inspect the crankshaft bearing journal for grooving, indicated by a ridge around the middle of the journal. Replace crankshaft if grooving is found. Grooving on the journal indicates that the bearing is also worn and must be replaced.

4. Inspect crankshaft gear for broken, cracked, or chipped teeth. Replace gear, if damaged, using a bearing puller.

5. Inspect bearing for obvious damage. Operate bearing to ensure smooth rotation. Replace bearing if damage is suspected.

6. Measure crankshaft dimensions A, B, C, D, and E. Replace crankshaft if any dimension is beyond limit.

   a. Dimension A = 35.002 to 35.018 mm (1.3790 to 1.3797 in.)

   b. Dimension B = 55.990 to 56.010 mm (2.2060 to 2.2067 in.)

   c. Dimension C = 51.940 to 51.960 mm (2.0464 to 2.0472 in.)

   d. Dimension D = 30.198 to 30.350 mm (1.1898 to 1.1958 in.)

   e. Dimension E = 45.009 to 45.020 mm (1.7734 to 1.7738 in.)

7. Measure the ID of crankshaft gear. ID shall be 34.965 to 34.985 mm (1.3776 to 1.3784 in.). Replace crankshaft if beyond limit.

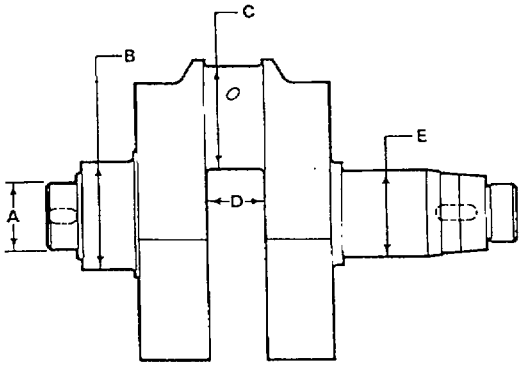

Figure 5-9. Cylinder, Piston, and Crankshaft (Sheet 2 of 5)

8. Inspect piston pin (8) for scoring. Replace piston pin if scored on outside diameter.

9. Inspect connecting rod for cracks or other damage. Replace connecting rod halves as a set if damaged in any way.

10. Inspect inner surface of connecting rod bushing (10) for scoring. Replace bushing if scored (refer to REPAIR).

11. Inspect connecting rod bearing halves (4) for scoring. The bearing halves are manufactured with a galvanically applied layer on the inside surface. When the layer is worn through, a shiny gold-bronze color will be visible. Replace bearing halves if layer is worn through.

12. Measure OD of piston pin (8). OD shall be 26.000 to 26.996 mm (1.0244 to 1.0636 in.). Replace piston pin if beyond limit.

13. Measure connecting rod dimensions F and G. Replace connecting rod if any dimension is beyond limit.

    a. Dimension F = 29.000 to 29.013 mm (1.1426 to 1.1431 in.)

    b. Dimension G = 55.600 to 55.619 mm (2.1906 to 2.1913 in.)

14. Measure connecting rod bushing dimensions H and I. Replace bushing if any dimension is beyond limit.

    a. Dimension H = 29.035 to 29.075 mm (1.1439 to 1.1455 in.)

    b. Dimension I = 1.483 to 1.495 mm (0.0584 to 0.0589 in.)

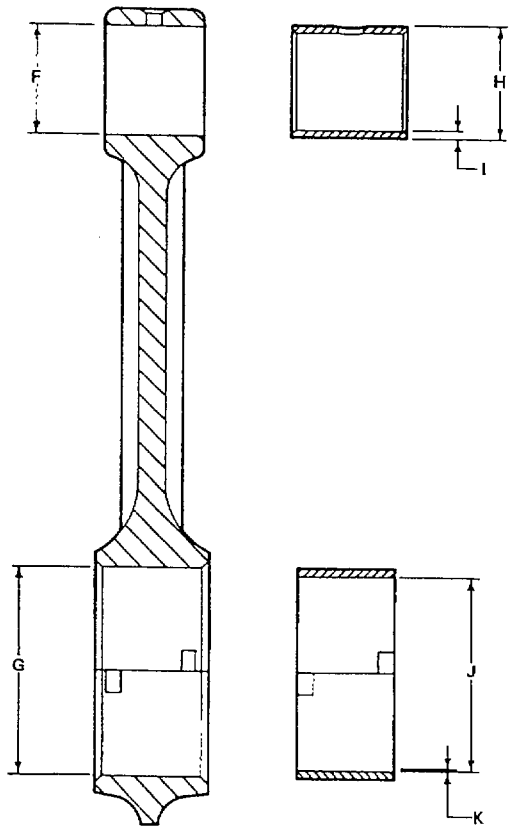

Figure 5-9. Cylinder, Piston, and Crankshaft (Sheet 3 of 5)

5-15. CYLINDER, PISTON, AND CRANKSHAFT MAINTENANCE

15. Inspect surface of cylinder liner bore for scoring. Replace cylinder if bore is scored.

16. Inspect outside surface of piston walls for scoring. Replace piston if scored.

17. Measure cylinder dimensions L, M, N, O, and P. Replace cylinder if any dimension is beyond limit.

    a. Dimension L = 108.990 to 108.995 mm (4.2942 to 4.2944 in.)

    b. Dimension M = 95.004 to 95.016 mm (3.7431 to 3.7436 in.)

    c. Dimension N = 115.850 to 115.940 mm (4.5645 to 4.5680 in.)

    d. Dimension O = 161.500 to 162.500 mm (6.3631 to 6.4025 in.)

    e. Dimension P = 103.793 to 103.880 mm (4.0894 to 4.0929 in.)

18. Measure piston dimensions Q, R. Replace piston if any dimension is beyond limit.

    a. Dimension Q = 95.113 to 95.127 mm (3.7474 to 3.7480 in.)

    b. Dimension R = 78.650 to 79.350 mm (3.0988 to 3.1264 in.)

19. Inspect internal bore of piston (marked S on figure) for scoring. Inspect external lip (marked T) for damage. Replace piston is damaged in any way.

20. Using a feeler gage, measure the clearance between wall of piston groove and top piston ring (compression). Replace ring set (see REPAIR) if clearance is greater than 0.037 mm (0.0015 in.).

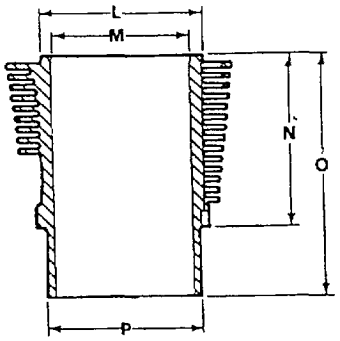

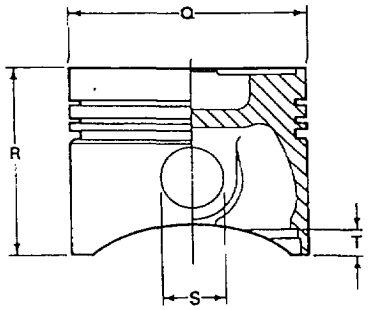

Figure 5-9. Cylinder, Piston, and Crankshaft (Sheet 4 of 5)

21. Measure clearance between wall of piston groove and middle piston ring. Replace ring set if clearance is greater than 0.031 mm (0.0012 in.).

22. Measure clearance between wall of piston groove and bottom piston ring (oil control). Replace ring set if clearance is greater than 0.031 mm (0.0012 in.).

C. REPAIR.

1. Replace connecting rod bushing (10) as follows:

   a. Using an arbor press, press bushing from connecting rod.

   b. Ensure that the bore of connecting rod and replacement bushing are clean.

   c. Align replacement bushing with rod bore, ensuring that the oil hole in the bushing is in line with the oil passage in the top of the connecting rod. Using an arbor press, install the bushing until it is flush with the face of the connecting rod.

2. Replace piston ring set as follows:

   a. Using a piston ring expander, remove and discard the piston rings.

NOTE

Ensure that piston rings are installed with markings facing top of piston.

   b. Using a piston ring expander, install the oil control ring in the bottom groove of the piston.

   c. Install the middle ring in the middle groove of the piston. Install the compression ring in the top groove of the piston.

   d. Stagger the position of the rings so that the ring end gaps are 120 degrees apart.

D. INSTALLATION.

1. Carefully install crankshaft (16, Figure 5-9) into engine block, inserting crankshaft end journal into bearing (15). Coat the bearing race on crankshaft with lubricating oil.

2. Coat new O-ring seal (14) and angle ring (13) with lubricating oil and install onto crankshaft (16). Install one belleville washer (12) with dish facing out, and the second belleville washer with dish facing in.

3. Compress piston rings (9) with a ring compressor. Position piston (5) with ring compressor onto cylinder (6) and push piston into cylinder.

4. Remove ring compressor. Adjust position of piston (5) in cylinder (6) so the piston pin bore is fully exposed below the cylinder liner.

5. Install assembled piston (5) and cylinder (6) over mounting studs. Engage the top of connecting rod (2) with piston.

6. Install piston pin (8) in piston (5) and connecting rod (2) bore. Tap into place until the piston pin is centered. Install new retaining rings (24).

7. Install flywheel (Para. 5-14).

8. Assemble piston (5), cylinder (6), and connecting rod (2).

9. Locate one half of connecting rod bearing (4) into top part of connecting rod (2). Align the lip of the bearing half with the groove in the connecting rod. Slide the bearing half into the connecting rod while depressing the center of the bearing half to conform it to the contour of the rod. Seat the bearing half with both ends flush with the flanges of the rod.

10. Turn crankshaft to top dead center (TDC) position. Install piston (5), cylinder (6), and connecting rod (2) while turning crankshaft to bottom dead center (BDC) position.

11. Install the second half of connecting rod bearing (4) into bottom part of connecting rod (1) in the same manner as step 8. Apply a coat of lubricating oil to both bearing halves after they are installed.

12. Mate bottom part of connecting rod (1) to crankshaft journal. Secure connecting rod using two screws (3). Torque screws to 43 to 46 ft-lbs (58 to 62 Nm).

13. Install camshaft (Para. 5-12) and flywheel (Para. 5-14).

14. Install cylinder head (Para. 5-9).

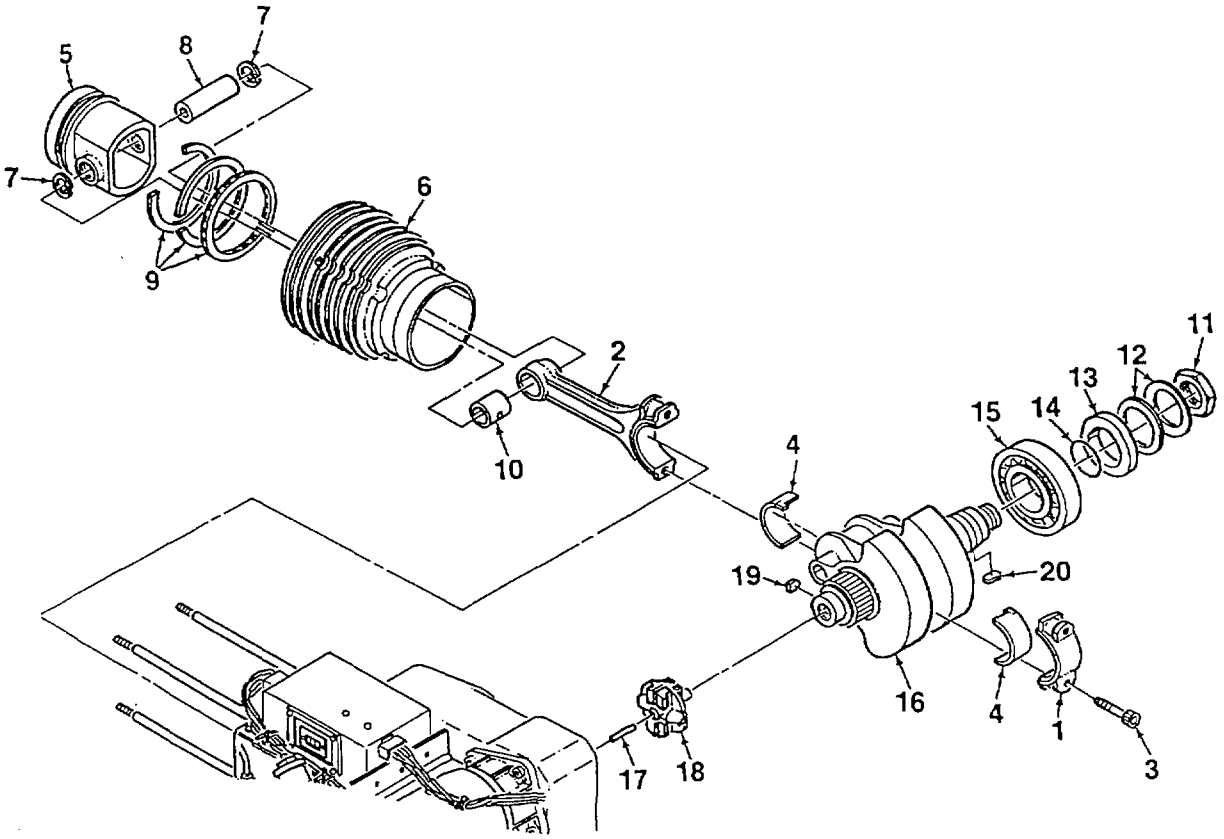

Figure 5-9. Cylinder, Piston, and Crankshaft
(Sheet 5 of 5)

5-16. ALTERNATOR MAINTENANCE

This task covers testing, removal, inspection, and installation

INITIAL SETUP

Tools:
Shop Equipment, Automotive Maintenance and Repair (Item 4, App. B)
Alternator Tool / Test Set (Item 7, App. B)

Equipment Condition:
APU Shut Down

A. TESTING. The following tests shall be conducted when the APU fails to generate voltage or voltage generated is below rated level. These tests are designed to isolate the cause of the fault.

1. Battery power must be supplied to the alternator's B+ terminal to perform these tests. If contactor (main power relay) will not, or cannot, engage, the contactor must be bypassed out of the circuit to complete the tests. Bypass the contactor, if required, as follows:

   a. Disconnect power from the APU by unplugging NATO connector.

   b. Open top rear cover on APU enclosure by turning latches. Remove fuel module cover.

   c. Look into fuel module and locate B+ and B- terminals on rear of NATO connector. B+ terminal is insulated. B- terminal is not insulated.

   d. Locate ALTERNATOR POSITIVE terminal on outside panel of fuel module.

   e. Connect test cable #1 (red wire cable) from NATO connector B+ terminal to ALTERNATOR POSITIVE terminal.

   f. Reconnect NATO connector to APU. Contactor is now bypassed.

2. Disconnect APU wiring harness from the round alternator control receptacle (Figure 5-10). This disconnects alternator from APU control panel.

3. Connect plug end of test cable #2 (brown wire cable) to the round alternator control receptacle. Connect alligator clip end of cable #2 to the alternator's B+ output stud. Completing this connection will energize the regulator, turning on the alternator.

NOTE

Test cable #2 has pins C and D connected for use with the N3120 regulator. Pins C and D are not used on the N3129 regulator and have no effect on the circuit.

4. Disconnect the regulator electrical connector from regulator.

5-16. ALTERNATOR MAINTENANCE

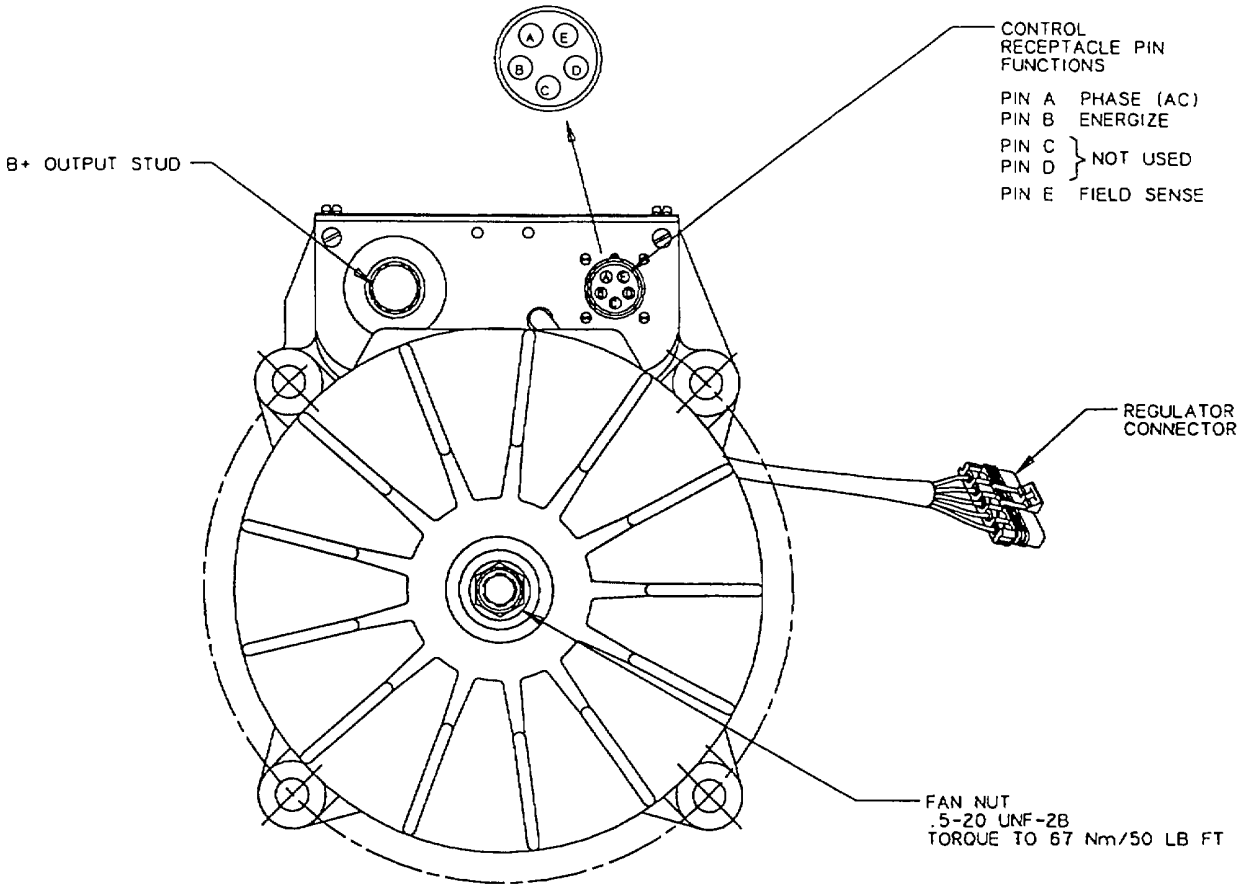

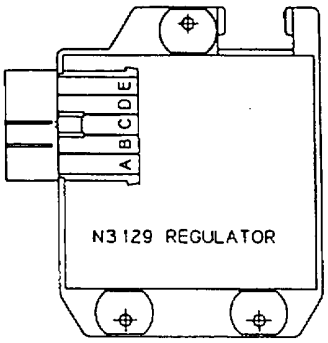

		LATCH		
E	D	C	B	A
B+ RED	V IN BLK	F- WHT	E BRN	B- GRN

End view of harness regulator connector

VOLTAGE REGULATOR PIN FUNCTIONS

PIN A	GROUND
PIN B	ENERGIZE
PIN C	FIELD-
PIN D	NOT USED
PIN E	B+

Figure 5-10. Alternator (Sheet 1 of 2)

5. Test for battery voltage as follows. Replace alternator if battery voltage is not present:

   a. Connect multimeter red lead to regulator connector pin E. Connect multimeter black lead to alternator ground bolt. Battery voltage shall be present.

   b. Connect multimeter red lead to the alternator B+ output stud. Connect multimeter black lead to regulator connector pin A. Battery voltage shall be present.

   c. Connect multimeter red lead to regulator connector pin B. Connect multimeter black lead to alternator ground bolt. Battery voltage shall be present.

6. Connect test cable #3 (white cable with regulator connectors and alligator clip) between regulator connector and regulator.

WARNING

Do not ground alligator clip. Injury to personnel and damage to equipment could result.

7. Connect multimeter red lead to test cable #3 alligator clip. Connect multimeter black lead to alternator ground bolt. Voltage reading shall be less than 1.0 volt. If voltage is greater than 1.0 volt, regulator is defective and must be replaced. Leave multimeter connected.

8. Disconnect test cable #2 alligator clip from the alternator B+ output stud. Multimeter will now read battery voltage. If voltage reading at pin C is below battery voltage, regulator is defective and must be replaced.

9. If additional testing is required, proceed as follows:

WARNING

Use caution when testing alternator magnetic pull. There will be a spark when alligator clip contacts ground bolt. Steel tool will "jump" from hand and snap against alternator. Do not hold hand between tool and alternator.

   a. With test cable #3 still connected between regulator connector and regulator, connect test cable #3 alligator clip to alternator ground bolt. There will be a large spark at the point of connection, indicating that the field coil is conducting.

   b. Place a steel tool next to the alternator fan hub (a thin piece of steel will work as well). If the tool snaps against the hub, the alternator coil is good and will produce electricity. Replace the regulator.

   c. If tool is not attracted to alternator hub, the field coil is defective. Replace the alternator.

10. Disconnect all test cables. Install fuel module cover and close top rear lid.

B. REMOVAL.

NOTE

Note location of silicon adhesive and silicon sponge to aid in reassembly.

1. Remove engine (Para. 5-8).

2. Remove flywheel shroud (1, Figure 5-10) from flywheel housing (2) by removing two screws (3), lockwashers (4), and washers (5).

3. Remove screw (7), washer (8), and lockwasher (9) that secure voltage regulator (6) to alternator.

4. Remove alternator fan shroud (10) from mounting blocks (13) by removing six screws (11), washers (12), and nuts (13).

5. Remove screw (14), washers (15, 16), and locknut (17) from lower mounting block (13). Remove mounting blocks from alternator fan by removing screws (18), washers (19), and nuts (20).

6. Remove metal flex coupling (21) from alternator shaft (22) by removing nut (23) and washer (24). Loosen coupling setscrew. Remove coupling from alternator shaft using a puller.

7. Remove flywheel housing (2) from alternator by removing four screws (25), washers (26), and lockwashers (27).

8. Remove four sleeves (28), screws (29), and washers (30) from flex coupling (21) only if damaged.

C. INSPECTION.

1. Inspect alternator for signs of damage. Inspect for corrosion and evidence of electrical short. Inspect metal components for cracks and dents.

2. Inspect electrical wiring for cuts, tears, kinks, or damage. Inspect electrical connectors and receptacle for bent, broken, or missing contactors.

3. Inspect metal flex coupling for signs of wear or stress.

5-16. ALTERNATOR MAINTENANCE

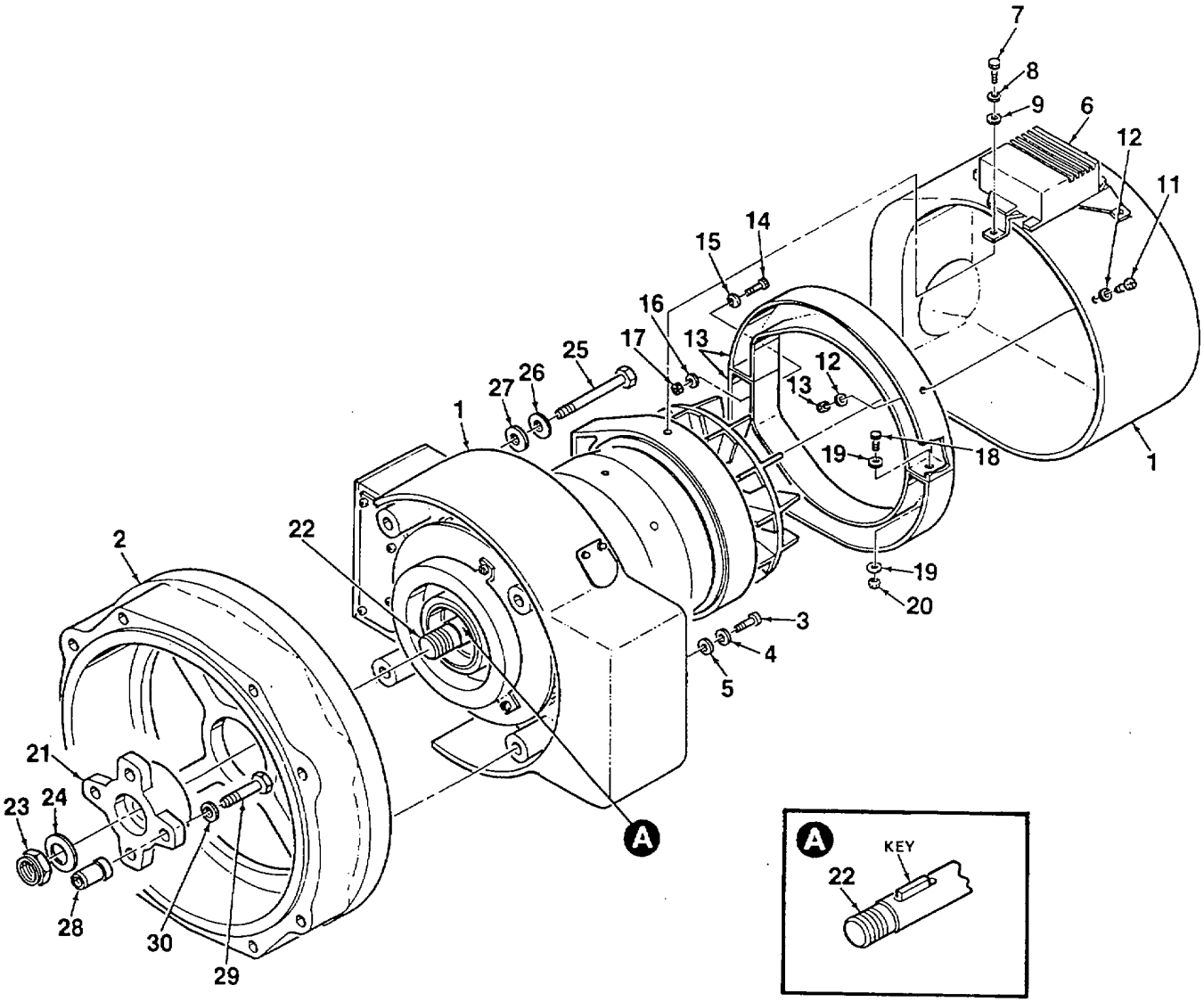

Figure 5-10. Alternator
(Sheet 2 of 2)

5-16. ALTERNATOR MAINTENANCE

D. INSTALLATION.

1. Apply silicon adhesive and foam insulating tape in accordance with notes made during removal.

2. Install four sleeves (28, Figure 5-10), screws (29), and washers (30) onto metal flex coupling (21).

3. Mate flywheel housing (2) to alternator and secure using four screws (25), washers (26), and lockwashers (27).

4. Install flex coupling (21) onto alternator shaft (22) so that keyway is aligned over key. Secure by tightening coupling setscrew. Install nut (23) and washer (24).

5. Install mounting blocks (13) over alternator fan and secure using screws (18), washers (19), and nuts (20). Install screw (14), washers (15, 16), and locknut (17) into lower mounting bracket.

6. Install voltage regulator (6) onto alternator using screw (7), washer (8), and lockwasher (9).

7. Fit alternator fan shroud (10) onto mounting blocks (13) and secure using six screws (11), washers (12), and nuts (13).

8. Fit flywheel shroud (1) onto alternator and mate to flywheel housing (2). Secure using two screws (3), lockwashers (4), and washers (5).

9. Install engine (Para. 5-8).

5-17. OIL COOLER MAINTENANCE

This task covers removal, inspection, and installation

INITIAL SETUP

Tools:
Shop Equipment, Automotive Maintenance and Repair (Item 4, App. B)

Equipment Condition:
Engine/Alternator Removed (Para. 5-7)
Oil Cooler Hoses Disconnected (Para. 4-38)

A. REMOVAL.

1. If replacement is required, remove sound-proofing material (1, Figure 5-11) from inside of enclosure by removing dome washers (2).

2. Remove engine mount (Para. 5-7).

3. Remove oil cooler guard (3) from enclosure by removing eight screws (4), washers (5), and four locknuts (6).

4. Remove oil cooler (7) from enclosure by removing six screws (12) and lockwashers (13) securing front portion of mounting block (11).

5. If replacement is required, remove eight split bushings (14) from oil cooler (7).

6. If replacement is required, remove rear portion of mounting blocks (11) from enclosure by removing four screws (8), lockwashers (9), and washers (10).

B. INSPECTION..

1. Inspect oil cooler for obvious damage. Inspect for evidence of leakage or corrosion. Inspect oil cooler fins for damage and straighten as required.

2. Inspect edge seal on oil cooler guard for damage. Remove and replace as required.

3. Inspect rubber grommets on oil cooler cover for damage. Replace as required.

5-17. OIL COOLER MAINTENANCE

C. INSTALLATION.

1. Install eight split bushings (14, Figure 5-11) onto oil cooler (7) using silicon.

2. Mate rear portion of two-piece cooler mounting blocks (11) to enclosure and secure using four screws (8), lockwashers (9), and washers (10).

3. Mate oil cooler (7) to rear portion of block (11). Install front portion of block using six screws (12) and lockwashers (13).

4. Install oil cooler guard (3) using eight screws (4), washers (5), and nuts (6).

5. Install soundproofing material (1) and secure using dome washers (2).

6. Install engine/alternator assembly and engine mounts (Para. 5-7).

7. Connect oil cooler hoses (Para. 4-38).

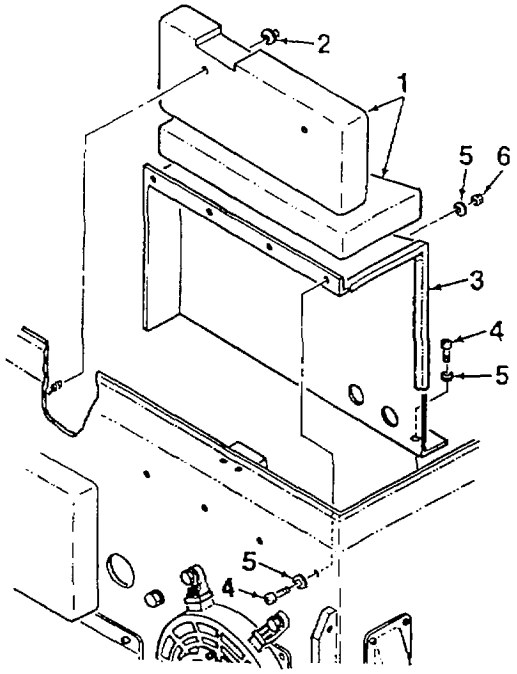

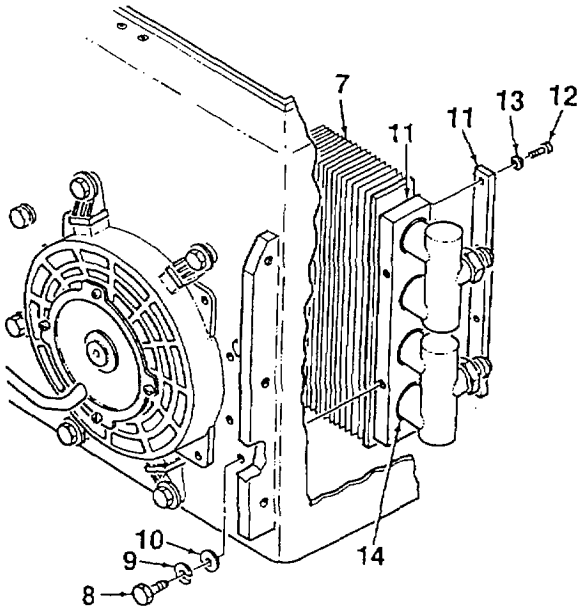

Figure 5-11. Oil Cooler

APPENDIX A

REFERENCES

A-1. Scope.

This appendix lists all forms, field manuals, and technical manuals referenced in this manual or used in conjunction with the APU.

Forms

Recommended Changes to Publications	DA Form 2028
Recommended Changes to Equipment Technical Manuals	DA Form 2028-2
Equipment Inspection and Maintenance Worksheet	DA Form 2404
Product Quality Deficiency Report	DA Form 368

Field Manuals

First Aid for Soldiers	FM 21-11

Painting Requirements

Color, Marking, and Preparation of Equipment for Shipment	AR 740-1
Color and Marking of Army Material	AR 746-5

Technical Bulletins

Noise and Conservation of Hearing	TB MED 251
Hand Portable Fire Extinguishers Approved for Army Use	TB 5-4200-200-10
Specification List of Standard Liquid Fuels, Lubricants, Preservatives, and Related Products Authorized for Use by US Army	TB 703-1

Technical Manuals

The Army Maintenance Management System (TAMMS)	TM 738-750
Administrative Storage of Equipment	TM 740-90-1
Procedures for Destruction of Equipment to Prevent Enemy Use	TM 750-244-3

APPENDIX B

MAINTENANCE ALLOCATION CHART (MAC)

Section I. INTRODUCTION

B-1. General.

a. This section provides a general explanation of all maintenance and repair functions authorized at various maintenance categories.

b. The Maintenance Allocation Chart (MAC) in Section II designates overall authority and responsibility for the performance of maintenance functions on the identified end item or component. The application of the maintenance functions to the end item or component will be consistent with the capacities and capabilities of the designated maintenance levels, which are shown in the MAC in column (4) as:

Unit - includes two subcolumns, C (operator/crew) and O (unit) maintenance.

Direct Support - includes an F subcolumn.

General Support - includes an H subcolumn.

Depot - includes a D subcolumn.

c. Section III lists the tools and test equipment (both special tools and common tool sets) required for each maintenance function as referenced from Section II.

d. Section IV contains supplemental instructions and explanatory notes for a particular maintenance function.

B-2. Maintenance Functions. Maintenance functions are limited to and defined as follows:

a. **Inspect.** To determine the serviceability of an item by comparing its physical, mechanical, and/or electrical characteristics with established standards through examination (e.g., by sight, sound, or feel).

b. **Test.** To verify serviceability by measuring the mechanical, pneumatic, hydraulic, or electrical characteristics of an item and comparing those characteristics with prescribed standards.

c. **Service.** Operations required periodically to keep an item in proper operating condition; e.g., to clean (includes decontaminate, when required), to preserve, to drain, to paint, or to replenish fuel, lubricants, chemical fluids, or gases.

d. **Adjust.** To maintain or regulate, within prescribed limits, by bringing into proper position, or by setting the operating characteristics to specified parameters.

e. **Align.** To adjust specified variable elements of an item to bring about optimum or desired performance.

f. **Calibrate.** To determine and cause corrections to be made or to be adjusted on instruments or test, measuring, and diagnostic equipment used in precision measurement. Consists of comparisons of two instruments, one of which is a certified standard of known accuracy, to detect and adjust any discrepancy in the accuracy of the instrument being compared.

g. **Remove/Install.** To remove and install the same item when required to perform service or other maintenance functions. Install may be the act of emplacing, seating, or fixing into position a spare, repair part, or module (component or assembly) in a manner to allow the proper functioning of an equipment or system.

h. **Replace.** To remove an unserviceable item and install a serviceable counterpart in its place. "Replace" is authorized by the MAC and assigned maintenance level is shown as the 3rd position code of the SMR code.

i. **Repair.** The application of maintenance services(1) including fault location/troubleshooting(2), removal/installation, and disassembly/assembly(3) procedures, and maintenance actions(4) to identify troubles and restore serviceability to an item by correcting specific damage, fault, malfunction, or failure in a parts, subassembly, module (component or assembly), end item, or system.

j. **Overhaul.** That maintenance effort (service/action) prescribed to restore and item to a completely serviceable/operational condition as required by maintenance standards in appropriate technical publications (i.e., DMWR). Overhaul is normally the highest degree of maintenance performed by the Army. Overhaul does not normally return an item to Like new condition.

k. **Rebuild.** Consists of those services/actions necessary for the restoration of unserviceable equipment to a like new condition in accordance with original manufacturing standards. Rebuild is the highest degree of materiel maintenance applied to Army equipment. The rebuild operation includes the act of returning to zero those age measurements (e.g., hours/miles) considered in classifying Army equipment/components.

---

(1) Services - Inspect, test, service, adjust, align, calibrate, and/or replace.

(2) Fault location/troubleshooting - The process of investigating and detecting the cause of equipment malfunctioning; the act of isolating a fault within a system or unit under test (UUT).

(3) Disassembly/assembly - The step-by-step breakdown (taking apart) of a spare/functional group coded item to the level of its least component, that is assigned an SMR code for the level of maintenance under consideration (i.e., identified as maintenance significant).

(4) Actions - Welding, grinding, riveting, straightening, facing, machining, and/or resurfacing.

B-3. Explanation of Columns in the MAC, Section II.

a. **Column 1, Group Number.** Column 1 lists functional group code numbers, the purpose of which is to identify maintenance significant components, assemblies, subassemblies, and modules with the next higher assembly.

b. **Column 2, Component/Assembly.** Column 2 contains the item names of components, assemblies, subassemblies, and modules for which maintenance is authorized.

c. **Column 3, Maintenance Function.** Column 3 lists the functions to be performed on the item listed in Column 2. (For detailed explanation of these functions, see paragraph B-2).

d. **Column 4, Maintenance Level.** Column 4 specifies each level of maintenance authorized to perform each function listed in Column 3, by indicating work time required (expressed as man-hours in whole hours or decimals) in the appropriate subcolumn. This work-time figure represents the active time required to perform that maintenance function at the indicated level of maintenance. If the number or complexity of the tasks within the listed maintenance function vary at different maintenance levels, appropriate work-time figures are shown for each level. The work-time figure represents the average time required to restore an item (assembly, subassembly, component, module, end item, or system) to a serviceable condition under typical field operating conditions. This time includes preparation time (including any necessary disassembly/assembly time), troubleshooting/fault location time, and quality assurance time in addition to the time required to perform the specific tasks identified for the maintenance functions authorized in the maintenance allocation chart. the symbol designations for the various maintenance levels are as follows:

C	Operator or crew maintenance
O	Unit maintenance
F	Direct support maintenance
L	Specialized Repair Activity (SRA) (5)
H	General support maintenance
D	Depot maintenance

e. **Column 5, Tools and Test Equipment Reference Code.** Column 5 specifies, by code, the common tool sets (not individual tools), common TMDE, and special tools, special TMDE, and special support equipment required to perform the designated function. Codes are keyed to tools and test equipment in Section III.

f. **Column 6, Remarks.** When applicable, this column contains a letter code, in alphabetical order, which is keyed to the remarks contained in Section IV.

---

(5) This maintenance level is not included in Section II, Column 4 of the MAC. Functions to this level of maintenance are identified by a work-time figure in the "H" column in Section II, Column 4, and an associated reference code is used in the Remarks column. This code is keyed to Section IV, remarks, and the SRA complete repair application is explained there.

B-4. Explanation of Columns in Tool and Test Equipment Requirements, Section III.

a. **Column 1, Reference Code.** The tool and test equipment reference code correlates with a code used in the MAC, Section II, Column 5.

b. **Column 2, Maintenance Level.** The lowest level of maintenance authorized to use the tool or test equipment.

c. **Column 3, Nomenclature.** Name or identification of the tool or test equipment.

d. **Column 4, National Stock Number.** The National Stock Number of the tool or test equipment.

e. **Column 5, Tool Number.** The manufacturer's part number, model number, or type number.

B-5. Explanation of Columns in Remarks, Section IV.

a. **Column 1, Remarks Code.** The code recorded in Column 6, Section II.

b. **Column 2, Remarks.** This column lists information pertinent to the maintenance function being performed as indicated in the MAC, Section II.

Section II. MAINTENANCE ALLOCATION CHART FOR MEP-952

(1)	(2)	(3)	(4) MAINTENANCE LEVEL					(5)	(6)
Group Number	Component/Assembly	Maintenance Function	Oper	Unit	Direct Support F	General Support H	Depot D	Tools and Equipment Ref Code	Remarks Code
00	MEP-952B	INSPECT	0.1	0.1	0.4				A
	AUXILIARY POWER	SERVICE	0.1	0.3				1	A, D
	UNIT	TEST			0.5			4	
		REPAIR	0.2	0.5	1.8			1, 4 - 6	G
01	NOSEPIECE ASSY	INSPECT	0.1	0.1					A
		REPLACE		0.3				1	
		REPAIR		0.4				1	
02	COVER ASSY	INSPECT	0.1	0.1					A
		REPLACE		0.4				1	
		REPAIR		0.5				1	
0201	COVER ASSY	INSPECT	0.1	0.1					A
	(FRONT)	REPLACE		0.4				1	
		REPAIR		0.3				1	
0202	COVER ASSY	INSPECT	0.1	0.1					A
	(REAR)	REPLACE		0.4				1	
		REPAIR		0.3				1	
03	CASE ASSY (APU	INSPECT	0.1	0.1					A
	ENCLOSURE)	REPLACE		0.7				1	
		REPAIR		0.7				1	
0301	OIL COOLER ASSY	INSPECT			0.1				A
		REPLACE			0.4			1	
		REPAIR			0.4			1	
04	CONTROL PANEL	INSPECT	0.1	0.1					A
	ASSY, LOCAL	TEST		0.2				1	A
		REPLACE		0.4				1	
		REPAIR		0.5				1	E
0401	SWITCH ASSY,	TEST	0.2					1	
	LOCAL CONTROL	REPLACE	0.4					1	
	PANEL								

Group Number	Component/Assembly	Maintenance Function	Oper	Unit	Direct Support F	General Support H	Depot D	Tools and Equipment Ref Code	Remarks Code
05	REMOTE CONTROL ASSY	INSPECT	0.1	0.1					A
		TEST		0.1				1	A, B,
		REPLACE	0.2						
		REPAIR		0.5				1, 2	E
0501	SWITCH ASSY, REMOTE CONTROL ASSY	TEST		0.2				1	
		REPLACE		0.4				1	
06	MODULE ASSY, FUEL	INSPECT	0.1	0.1					A
		SERVICE	0.1	0.3					A
		REPAIR		0.8				1	E
		REPLACE		0.4				1	
0601	PUMP ASSY, FUEL	INSPECT	0.1	0.1					A
		REPAIR		0.2				1	E
		REPLACE		0.4				1	
0602	HOUSING ASSY, FUEL FLOAT VALVE	INSPECT		0.1					
		TEST		0.1					
		REPAIR		0.6				1	E
		REPLACE		0.6				1	
07	ENGINE / ALTERNATOR ASSY	INSPECT	0.1	0.1	0.4				A
		SERVICE	0.1	0.3				1	A
		TEST			0.5			4	
		REPAIR	0.2	1.3	1.8			1,4 - 6	G
		REPLACE			0.8			4, 5	
0701	SHROUD ASSY	INSPECT			0.1				A
		REPAIR			0.5			1	E
		REPLACE			0.8			1	
0702	ENGINE ASSY	INSPECT		0.2					
		REPAIR		0.5	0.5			1, 4	E
		REPLACE			0.8			4, 5	
070201	ENGINE, DIESEL	INSPECT	0.1	0.1	0.4			4	A
		SERVICE	0.1	0.3					A
		ADJUST		0.4				1	A
		TEST			0.5			4	
		REPAIR		1.3	1.8			4 - 6	
		REPLACE			0.8			4, 5	
070201 01	CYLINDER HEAD ASSY	INSPECT			0.2			4	
		REPLACE			1.3			4	
		REPAIR			1.0			4	E

Group Number	Component/Assembly	Maintenance Function	Oper	Unit	Direct Support F	General Support H	Depot D	Tools and Equipment Ref Code	Remarks Code
070201 02	PISTON	INSPECT			0.4			4	
		REPLACE			1.5			4	
		REPAIR			1.3			4	E
070201 03	CONNECTING ROD	INSPECT			0.4			4	
		REPLACE			1.5			4	
070201 04	CRANKSHAFT ASSY	INSPECT			0.4			4	
		REPLACE			1.5			4	
		REPAIR			0.8			4	E
070202	EXHAUST PIPE ASSY	INSPECT		0.1					A
		REPLACE		0.6				1	
		REPAIR		0.4				1	E
0703	ALTERNATOR ASSY	INSPECT	0.1	0.1				4	A
		ADJUST			0.3			4	
		TEST			0.5			4	
		REPAIR			1.0			4	E
		REPLACE			0.8			4, 5	
08	EXHAUST ASSY, INTERNAL	REPLACE			1.0			4	
		REPAIR			0.7			4	E

Section III. TOOLS AND TEST EQUIPMENT FOR MEP-952B

Tool or Test Equipment Ref Code	Maintenance Level	Nomenclature	National Stock Number	Tool Number
1	O	SHOP EQUIPMENT, AUTOMOTIVE MAINTENANCE AND REPAIR, ORG LEVEL COMMON NO. 1	4910-00-754-0654	SC4910-95-CL-A74
2	O	TOOL KIT, GENERAL MECHANIC'S AUTOMOTIVE	5180-00-177-7033	SC5180-90-CL-N26
3	F	TOOL KIT, GENERAL MECHANIC'S	5180-00-699-5273	SC5180-90-CL-N05
4	F	SHOP EQUIPMENT, AUTOMOTIVE MAINTENANCE AND REPAIR: FIELD MAINTENANCE, BASIC, LESS POWER	4910-00-754-0705	SC4910-95-CL-A31
5	F	HOIST, 600 LB CAPACITY		
6	F	GOVERNOR ADJUSTMENT TOOL		28099002
7	F	TOOL / TEST SET		28099001

Section IV. REMARKS FOR MEP-952B

Remarks Code	Remarks
A	PREVENTIVE MAINTENANCE CHECKS AND SERVICES (PMCS)
B	TEST BY DEPRESSING LAMP TEST SWITCH TO TEST LED INDICATORS
C	CONTINUITY CHECK USING MULTIMETER
D	SERVICE IN ACCORDANCE WITH LUBRICATION ORDER, APPENDIX F
E	REPAIR IS LIMITED TO REPLACEMENT OF DAMAGED PARTS
F	TEST BY DEPRESSING SWITCH AND OBSERVING SHUTDOWN
G	REPAIR AT OPERATOR LEVEL IS LIMITED TO REMOVAL AND REPLACEMENT OF AIR FILTER AND DRAINING OF WATER FROM FUEL WATER SEPARATOR.

APPENDIX C

COMPONENTS OF END ITEM (COEI) AND BASIC ISSUE ITEMS (BII) LIST

Section I. INTRODUCTION

C-1. Scope.

This appendix list components of end item and basic issue items for the APU to help you inventory the items for safe and efficient operation of the equipment.

C-2. General.

The Components of End Item (COEI) and Basic Issue Items (BI) lists are divided into the following sections:

a. **Section II, Components of End Item.** This listing is for information purposes only, and is not authority to requisition replacements. These items are part of the APU. As part of the end item, these items must be with the end item whenever it is issued or transferred between property accounts. Items of COEI are removed and separately packaged for transportation or shipment only when necessary. Illustrations are furnished to help you find and identify the items.

b. **Section III, Basic Issue Items.** These essential items are required to place the APU in operation, operate it, and to do emergency repairs. Although shipped separately packaged, BE must be with the APU during operation and when it is transferred between property accounts. This list is your authority to request/requisition them for replacement based on authorization of the end item by the TOE/MTOE. Illustrations are furnished to help you find and identify the items.

C-3. Explanation of Columns.

a. **Column 1, Illus Number**, gives you the number of the item illustrated.

b. **Column 2, National Stock Number**, identifies the stock number of the item to be used for requisitioning purposes.

c. **Column 3, Description and Usable On Code**, identifies the Federal item name (in all capital letters) followed by a minimum description when needed. The last line below the description is the Commercial and Government Entity Code (CAGEC) (in parentheses) and the part number.

d. **Column 4, U/I (Unit of Issue)**, indicates how the item is issued for the National Stock Number shown in Column (2).

e. **Column 5, Qty Rqd**, indicates the quantity required.

Section II. COMPONENTS OF END ITEM

(1) Illus Number	(2) National Stock Number	(3) Description CAGEC and Part Number	(4) U/M	(5) Qty Rqr
		TO BE SUPPLIED BY CECOM PER ACTION ITEM		

Section III. BASIC ISSUE ITEMS

(1) Illus Number	(2) National Stock Number	(3) Description CEGEC and Part Number	(4) U/M	(5) Qty Rqr
1	To Be Assigned	TECHNICAL MANUAL, TM 9-6115-664-13&P	EA	1

APPENDIX D

ADDITIONAL AUTHORIZATION LIST

Section I. INTRODUCTION

D-1. Scope.

This appendix lists additional items that you are authorized for the support of the APU.

D-2. General.

This list identifies items that do not accompany the APU and that do not have to be turned in with it. These items are all authorized by CTA, MTOR, TDA, or JTA.

D-3. Explanation of Listing.

National Stock Numbers, descriptions, and quantities are provided to help identify and request the additional items required to support the APU. The items are listed in alphabetical sequence by item name under the type of document (ie, CTA, MTOR, TDA, or JTA) which authorizes the item(s).

Section II. ADDITIONAL AUTHORIZATION LIST

(2) National Stock Number	(3) Description CEGEC and Part Number	Usable On Code	(4) Qty U/I	(5) Reqd
	NOT APPLICABLE			

APPENDIX E

EXPENDABLE AND DURABLE ITEMS LIST

Section I. INTRODUCTION

E-1. Scope.

This appendix lists expendable and durable items that you will need to operate and maintain the APU. This listing is for information only and is not authority to requisition the listed items. These items are authorized to you by CTA 50-790, Expendable/Durable Items (except medical, class V repair parts, and heraldic items), or CTA 8-100, Army Medical Department Expendable/Durable Items.

E-2. Explanation of Columns.

a. **Column 1, Item Number.** This number is assigned to the entry in the listing and is referenced in the narrative instructions to identify the item (e.g., Cleaning Compound (Item 5, App. E)).

b. **Column 2, Level.** This column identifies the lowest level of maintenance that requires the item.

c. **Column 3, National Stock Number.** This is the national stock number assigned to the item which you can use to requisition it.

d. **Column 4, Item Name, Description, CAGEC, Part Number.** This provides the other information you need to identify the item.

e. **Column 5, UM.** This code shows the physical measurement or count of an item, such as gallon, dozen, pound, or gross.

Section II. EXPENDABLE/DURABLE SUPPLIES AND REQUIREMENTS LIST

(1) Item Number	(2) Level	(3) National Stock Number	(4) Item Name, Description CAGEC, Part Number	(5) U/M
1	O, F		ADHESIVE, LOCTITE (0A083) P/N 242	OZ
2	O		ADHESIVE, SILICON (81349) P/N MIL-A-46106	OZ
3	O, F		COMPOUND, ANTI-SEIZE (81349) P/N M[L-A-907	
4	O, F		SEALANT, THREAD (62377) P/N 82480	
5	F		GREASE	
6	O		POLYURETHANE COATING, ENAMEL, COLOR GREEN, PER FED-STD-595 (81349) P/N TT-E-527 / MIL-C-46168	GL
7	O, F		RAG, SHOP, CLEANING	EA
8	O		TAPE, VERY HIGH BON (VHB) (U6293) P/N 4950	RL
9	O, F	6580-00-285-8011	SOLVENT, CLEANING, DRY (81349) P/N PD-680, TYPE II OR III	QT
10	C, O, F	9150-00-186-6668	OIL, LUBRICATING, ENGINE (81349) P/N MIL-L-2104	QT
11	C, O, F		OIL, LUBRICATING, ENGINE, ARCTIC (81349) P/N MIL-L-46176	QT
12	O, F		ADHESIVE, CONTACT, SPRAY-ON (81349) P/N MMM-A-130	TBD
13	O		WIRE, SAFETY	RL

APPENDIX F

LUBRICATION INSTRUCTIONS

F-1. Scope.

This appendix provides instructions for lubricating and servicing the APU.

F-2. General.

a. Intervals (on-condition or hard time) and the related man-hour times are based on normal operation. The man-hour time specified is the time you need to do all the services prescribed for a particular interval. Change the hard time interval if your lubricants are contaminated or if you are operating the equipment under adverse operating conditions, including longer-than-usual operating hours. The hard time interval may be extended during periods of low activity. If extended, adequate preservation precautions must be taken.

b. Lubrication points are indicated by arrow shafts on the equipment.

c. The lowest level of maintenance authorized to lubricate a point is Unit Maintenance (C).

F-3. Oil Servicing Procedures.

a. Unlock lid latches and open APU front lid.

b. Remove engine oil dipstick. Wipe clean and reinsert into engine. Remove dipstick and check oil level.

c. High mark on dipstick indicates "full" condition. Oil level on dipstick must fall between high and low marks.

CAUTION

Always wipe clean oil filler components before starting your lube service. Never use the wrong type or grade of oil. Never use too much oil, as overfilling will cause spillage and harm engine components.

d. If oil level is low, remove oil filler cap. Fill engine with up to 2.5 quarts of engine lubricating oil as specified. Pour oil slowly to prevent overflow.

e. Using engine oil dipstick, check for proper oil level.

f. Install oil filler cap. Close front lid and lock using lid latches.

TOTAL TASK-HR	
INTERVAL	TASK-HR
10 hours	0.25

LUBRICANT	INTERVAL
Dipstick (Check oil level) (C) (See note 4)	
MIL-L-2104/ MIL-L-46167 Engine Oil Fill Tube (C)	10 hours

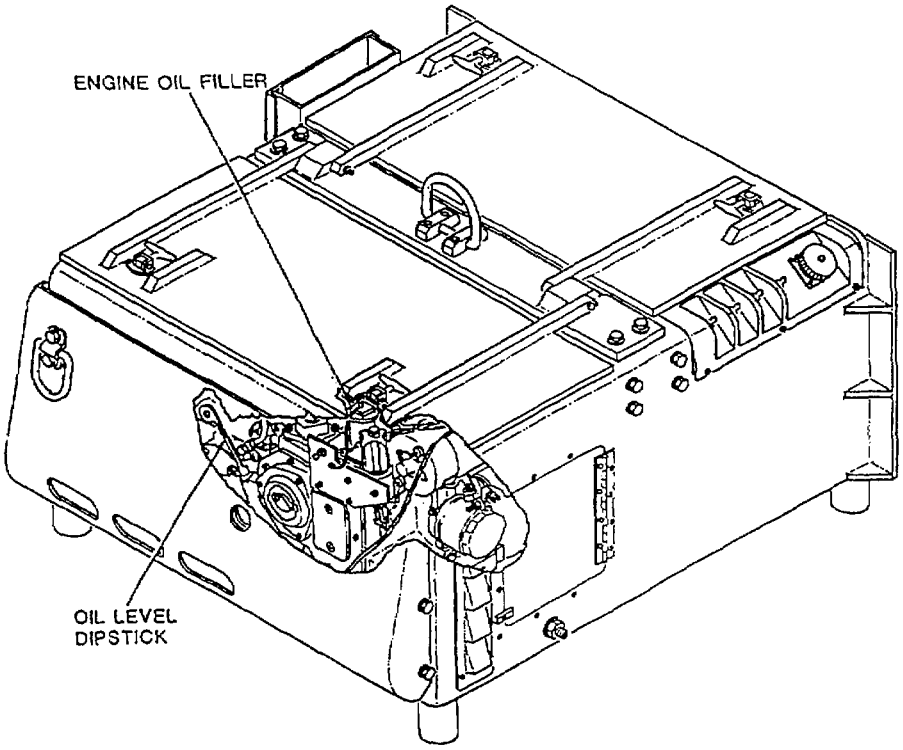

KEY

Temperature Range	Lubricant Mil. Symbol Specification	Capacity	Interval	Man-hour
0 F to +120 F (-18 to +49 C)	MIL-L-2104, 15W40	2.7 QTS (2.6 LTRS)	10 hours	.10
-25 F to +15 F (-32 to -9.5 C)	MIL-L-46167, 5W30	2.7 QTS (2.6 LTRS)	10 hours	.10

Copy of these lubrication instructions will remain with the equipment at all times; instructions contained herein are mandatory.

APPENDIX G

REPAIR PARTS AND SPECIAL TOOLS LIST

Section I. Introduction

G-1. Scope.

This appendix lists and authorizes spares and repair parts; special tools; special test, measurement, and diagnostic equipment (TMDE); and other special support equipment required for the performance of unit, direct support, and general support maintenance of the 5KW APU. It authorizes the requisitioning, issue, and disposition of spares, repair parts and special tools as indicated by the source, maintenance, and recoverability (SMR) codes.

G-2. General.

In addition to Section I, Introduction, this Repair Parts and Special Tools List is divided into the following sections:

a. **Section II. Repair Parts List.** A list of spares and repair parts authorized by this RPSTL for use in the performance of maintenance. This list also includes parts which must be removed for replacement of the authorized parts. Parts lists are composed of functional groups in ascending alphanumeric sequence, with the parts in each group listed in ascending item number sequence. Figure numbers are listed directly beneath the group header. Bulk materials are listed in item name sequence. Repair part kits are listed separately in their own functional group within Section II. Repair parts for reparable special tools are also listed in this section. Items listed are shown on the associated illustration.

b. **Section III. Special Tools List.** Not applicable. A list of special tools, special TMDE, and other special support equipment authorized by this RPSTL as indicated by Basis of Issue (BOI) information in (column (5)) for the performance of maintenance.

c. **Section IV Cross-Reference Indexes.** A List, in National item identification number (NIIN) sequence, of all National stock numbered items appearing in the listing, followed by a list in alphanumeric sequence of all part numbers appearing in the listings. National stock numbers and part numbers are cross-referenced to each illustration figure and item number appearance. The figure number and item number index lists figure and item numbers in numeric sequence and cross-references National stock number, Commercial and Government Entity Code, and part numbers.

G-3. Explanation of Columns (Sections II and III).

a. **Item No. (Column (1)).** Indicates the number used to identify items called out in the illustration.

b. **SMR Code (Column (2)).** The source, maintenance, and recoverability (SMR) code is a five-position code containing supply/requisitioning information, maintenance category authorization criteria and disposition instruction, as shown in the breakout on the following page:

Source Code	Maintenance Code		Recoverability Code
XX	XX		XX
1st two positions	3d position	4th position	Who determines disposition action on an unservice-able item.
How you get an item.	Who can install, replace or use the item.	Who can do complete repair (see note) on the item.	

NOTE

Complete repair: Maintenance capacity, capability, and authority to perform all corrective maintenance tasks of the "repair" function in a use/user environment in order to restore serviceability to a failed item.

(1) **Source Code.** The source code tells you how to get an item needed for maintenance, repair, or overhaul of an end item/equipment, Explanations of source codes follows:

Code	Explanation
PA PB PC PD PE PF PG	Stocked items: use the applicable NSN to request/ requisition items with these source codes. They are authorized to the level indicated by the code entered in the third position of the SMR code.
	NOTE **Items coded PC are subject to deterioration.**
KD KF KB	Items with these codes are not to be requested/ requisitioned individually. They are part of a kit which is authorized to the maintenance category indicated in the third position of the SMR code. The complete kit must be requisitioned and applied.
MO - Made at unit/AVUM category MF - Made at DS/AVIM category MH - Made at GS category	Items with these codes are not to be requested/ requisitioned individually. They must be made from bulk material which is identified by the part number in the description and usable on code (UOC) column and listed in the Bulk Material group of the repair parts list.

Code	Explanation
ML - Made at Specialized Repair Activity (SRA) MD - Made at Depot	If the item is authorized to you by the third position code of the SMR code, but the source code indicates it is made at a higher category, order the item from the higher category of maintenance.
AO - Assembled by unit/ AVUM category AF - Assembled by DS/ AVIM category AH - Assembled by GS category AL - Assembled by SRA AD - Assembled by Depot	Items with these codes are not to be requested/ requisitioned individually. The parts that make up the assembled item must be requisitioned or fabricated and assembled at the category of maintenance indicated by the source code. If the third position code of the SMR code authorizes you to replace the item, but the source code indicates the item is assembled at a higher category, order the item from the higher category of maintenance.

XA - Do not requisition an "XA" coded item. Order its next higher assembly. (Also, refer to NOTE below.)
XS - If an "XS" item is not available from salvage, order it using the CAGEC and part number given.
XC - Installation drawing, diagram, instruction sheet, or field service drawing, that is identified by manufacturer's part number.
XD - Item is not stocked. Order an "XD" coded item through normal supply channels using the CAGEC and part number given, if no NSN is available.

NOTE

Cannibalization or controlled exchange, when authorized, may be used as a source of supply for items with the above source codes, except for those source coded "XA" or those aircraft support items restricted by requirements of AR 750-1.

(2) Maintenance Code. Maintenance codes tell you the category of maintenance authorized to USE and REPAIR support items. The maintenance codes are entered in the third and fourth positions of the SMR code as follows:

(a) The maintenance code entered in the third position tells you the lowest maintenance category authorized to remove, replace, and use an item. The maintenance code entered in the third position will indicate authorization to one of the following categories of maintenance:

Code	Explanation
C -	Crew or operator maintenance done within unit or aviation maintenance.
O -	Unit or aviation unit category can remove, replace, and use the item.
F -	Direct support or aviation intermediate category can remove, replace, and use the item.
H -	General support category can remove, replace, and use the item.
L -	Specialized repair activity can remove, replace, and use the item.
D -	Depot category can remove, replace, and use the item.

(b) The maintenance code entered in the fourth position tells whether or not the item is to be repaired and identifies the lowest maintenance category with the capability to do complete repair (i.e., perform all authorized repair functions). This position will contain one of the following maintenance codes.

NOTE

Some limited repair may be done on the item at a lower category of maintenance, if authorized by the Maintenance Allocation Chart (MAC) and SMR codes.

Code	Explanation
O -	Unit or aviation unit is the lowest category that can do complete repair of the item.
F -	Direct support or avi ation intermediate is the lowest category that can do complete repair of the item.
H -	General support is the lowest category that can do complete repair of the item.
L -	Specialized repair activity (designate the specialized repair activity) is the lowest category that can do complete repair of the item.
D -	Depot is the lowest category that can do complete repair of the item.
Z -	Nonrepairable. No repair is authorized.
B -	No repair is authorized. (No parts or special tools are assigned for the maintenance of a "B" coded item.) However, the item may be reconditioned by adjusting, lubricating, etc., at the user category.

(3) **Recoverability Code.** Recoverability codes are assigned to items to indicate the disposition action on unserviceable items. The recoverability code is entered in the fifth position of the SMR code as follows:

Code	Explanation
Z -	Nonrepairable item. When unserviceable, condemn and dispose of the item at the category of maintenance shown in the third position of SMR code.
O -	Repairable item. When uneconomically repairable, condemn and dispose of the item at unit or aviation unit category.
F -	Repairable item. When uneconomically repairable, condemn and dispose of the item at direct support or aviation intermediate category.
H -	Repairable item. When uneconomically repairable, condemn and dispose of the item at general support category.
D -	Repairable item. When beyond lower category repair capability, return to depot. Condemnation and disposal of item not authorized below depot category.
L -	Repairable item. Condemnation and disposal not authorized below specialized repair activity (SRA).
A -	Item requires special handling or condemnation procedures because of specific reasons (e.g., precious metal content, high dollar value, critical material, or hazardous material. Refer to appropriate manuals/directives for specific instructions.

c. **NSN (Column (3)).** Indicates the national stock number assigned to the manufacturer's part number. The national stock number consists of 13 digits.

d. **CAGEC (Column (4)).** The Commercial and Government Entity Code (CAGEC) is a 6-digit numeric code which is used to identify the manufacturer, distributor, or Government agency, etc., that supplies the item.

e. **Part Number (Column (5)).** Indicates the primary number used by the manufacturer (individual company, firm, corporation. or Government activity), which controls the design and characteristics of the item by means of its engineering drawings, specifications, standards, and inspection requirements to identify an item or range of items.

NOTE

When you use an NSN to requisition an item, the item you receive may have a different part number from the part ordered.

f. **Description and Usable on Code (UOC) (Column (6)).** This column includes the following information:

(1) The Federal item name and, when required, a minimum description to identify the item.

(2) The physical security classification of the item is indicated by the parenthetical entry (insert applicable physical security classification abbreviation, e.g., Phy Sec C1 (C) Confidential, Phy Sec C1 (S) Secret, Phy Sec C1 (T) Top Secret).

(3) Items that are included in kits and sets are listed below the name of the kit or set.

(4) Spare/repair parts that make up an assembled item are listed immediately following the assembled item line entry.

(5) Part numbers for bulk materials are referenced in this column in the line entry for the item to be manufactured/fabricated.

(6) When the item is not used with all serial numbers of the same model, the effective serial numbers are shown on the last line of the description (before UOC).

(7) Usable on code, when applicable (para 5).

(8) in the Special Tools section, the basis of issue (BOI) appears as the last line in the entry for each special tool, special TMDE, and other special support equipment. When density of equipments supported exceeds density spread indicated in the basis of issue, the total authorization is increased proportionately.

(9) The statement "END OF FIGURE" appears just below the last item description in Column (5) for a given figure in both Section II and Section III.

g. **Qty (Column (7)).** Indicates the quantity of the item used in the breakout shown on the illustration figure, which is prepared for a functional group, subfunctional group, or an assembly. A "V" appearing in this column in lieu of a quantity indicates that the quantity is variable and the quantity may vary from application to application.

G-4. Explanation of Columns (Section IV).

a. **National Stock Number (NSN) Index.**

(1) **Stock Number Column.** This column lists the NSN by National item identification number (NIIN) sequence. The NIIN consists of the last nine digits of the NSN. When using this column to locate an item ignore the first four digits of the NSN. When requisitioning items use the complete NSN (13 digits) sequence.

(2) **Fig. Column.** This column lists the number of the figure where the item is identified/located. The illustrations are in numerical sequence in Sections II and III.

(3) **Item Column.** The item number identifies the item associated with the figure listed in the adjacent Fig. column. This item is also identified by the NSN listed on the same line.

b. **Part Number Index.** Part numbers in this index are listed by part number in ascending alphanumeric sequence.

(1) **CAGEC Column.** This column lists the Commercial and Government Entity Code (CAGEC).

(2) **Part Number Column.** This column indicates the part number assigned to the item.

(3) **Stock Number Column.** This column lists the National Stock Number for the associated part number and manufacturer identified in the part number and CAGEC columns to the left.

(4) **Fig. Column.** This column lists the number of the figure where the item is identified/located in Sections II and III.

(5) **Item Column.** The item number is that number assigned to the item as it appears in the figure referenced in the adjacent figure number column.

c. **Figure and Item Number Index.**

(1) **Fig. Column**. This column lists the number of the figure where the item is identified/located in Sections II and III.

(2) **Item Column**. The item number is that number assigned to the item as it appears in the figure referenced in the adjacent figure number column.

(3) **Stock Number Column**. This column lists the National stock number for the item.

(4) **CAGEC Column**. The Commercial and Government Entity Code (CAGEC) is a 5-digit numeric code used to identify the manufacturer, distributor, or Government agency, etc., that supplies the item.

(5) **Part Number Column**. Indicates the primary number used by the manufacturer (individual, firm, corporation, or Government activity), which controls the design and characteristics of the item by means of its engineering drawings, specifications, standards. and inspection requirements to identify an item or range items.

G-5. Special Information.

a. **Usable on Code.** Not applicable. The Usable On Code (UOC) appears in the lower left comer of the description column heading. Usable on codes are shown as "UOC:" in the description column (justified left) on the applicable item description nomenclature. Uncoded items are applicable to all models.

b. **Fabrication Instructions.** Bulk materials required to manufacture items are listed in the bulk material functional group of this RPSTL. Part numbers for bulk materials are also referenced in the description column the tine item entry for the item to be manufactured/fabricated.

c. **Assembly Instructions.** Not applicable. Detailed assembly instructions for items source coded to be assembled from component spare/repair parts are found in referenced manuals. Items that make up the assembly are listed immediately following the assembly item entry or reference is made to an applicable figure.

d. **Kits.** Not applicable. Line item entries for repair part kits appear in a group in Section II.

e. **Index Numbers.** Items which have the word BULK in the figure column will have an index number shown in the item number column. This index number is a cross-reference between the National Stock Number/Part Number Index and the bulk material list in Section II.

f. **National Stock Numbers.** National Stock Numbers (NSN's) that are missing from "P" source coded items have been applied for and will be added to this TM by future change/revision when they are entered in the Army Master Data File (AMDF). Until the NSN's are established and published, submit exception requisitions to: Commander, US Army Communications-Electronics Command and Fort Monmouth, ATTN: AMSEL-LC-MM, Fort Monmouth, NJ 07703-5007 for the part required to support your equipment.

G-6. How to Locate Repair Parts.

a. When National Stock Number (NSN) or part number is not known:

(1) **First.** Using the table of contents, determine the assembly or subassembly group to which the item belongs. This is necessary since figures are prepared for assembly and subassembly groups, and listings are divided into the same groups.

(2) **Second.** Find the figure covering the assembly or subassembly group to which the item belongs.

(3) **Third.** Identify the item on the figure and note the item number.

(4) **Fourth.** Refer to the Repair Parts Lists for the figure to find the part number for the item number noted on the figure.

(5) **Fifth.** Refer to the Part Number Index to find the NSN, if assigned.

b. **When National Stock Number (NSN) or part number is known:**

(1) **First.** Using the index of National stock numbers and part numbers, find the pertinent National Stock Number or part number. The NSN index is in National Item Identification Number (NIIN) sequence (para G-4a(1)). The part numbers in the part number index are listed in ascending alphanumeric sequence (para G-4b). Both indexes cross-reference you to the illustration figure and item number of the item you are looking for.

(2) **Second.** After finding the figure and item number, verity that the item is the one you're looking for, then locate the item number in the repair parts list for the figure.

G-7. Abbreviations.

Not applicable.

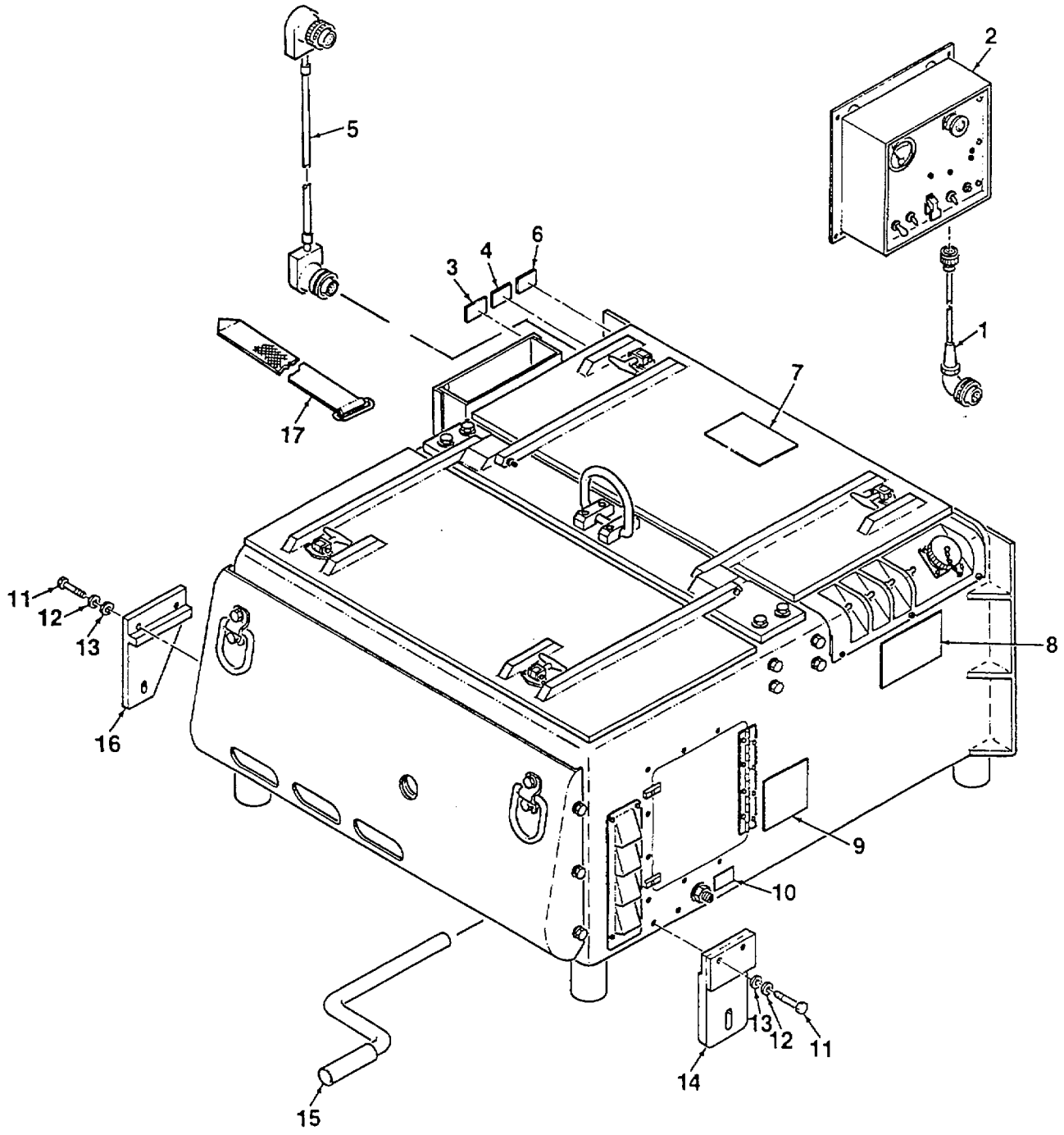

Figure G-1. MEP-952B Generator Identification Plates and Components.

ITEM NO.	SMR CODE	NSN	CAGEC	PART NUMBER	DESCRIPTION & USABLE ON CODE	QTY
					GROUP 00 MEP-952B AUXILIARY POWER UNIT	
					FIGURE G-1	
	PDFFF	6115-01-452-6513	62502	96-9000	5KW, 28VDC, GENERATOR	1
1	PAOZZ		62502	96-9392	CABLE ASSEMBLY, REMOTE	1
2	PAOOO		62502	96-9390	REMOTE CONTROL ASSEMBLY (SEE FIGURE G-12 FOR PARTS BREAKDOWN)	1
3	XBOZZ		62502	96-9102	NAMEPLATE, FUEL SUPPLY	1
4	XBOZZ		62502	96-9101	NAMEPLATE, FUEL TYPES	1
6	PAOZZ		62502	96-9129	CABLE ASSEMBLY, NATO	1
5	XBOZZ		62502	96-9100	NAMEPLATE, SLAVE/OUTPUT RECEPTACLE	1
7	XBOZZ		62502	96-9031	NAMEPLATE, OPERATING INSTRUC TIONS	1
8	XBOZZ		62502	96-9103	NAMEPLATE, APU RATING	1
9	XBOZZ		62502	96-9104	NAMEPLATE, IDENTIFICATION	1
10	XBOZZ		62502	96-9105	NAMEPLATE, OIL DRAIN	1
11	PAFZZ		96906	MS35307-413	SCREW, CAP, HEXAGON	4
12	PAFZZ	5310-00-584-5272	96906	MS35338-48	WASHER, LOCK	4
13	PAFZZ	5310-00-809-5997	96906	MS27183-17	WASHER, FLAT	4
14	XBOZZ		62502	96-9130	BRACKET	1
15	XBOZZ		D8889	110.116.5	CRANK, HAND, ENGINE	1
16	XBOZZ		62502	96-9131	BRACKET	1
17	XBOZZ		62502	96-9128	STRAP, CABLE	1

END OF FIGURE

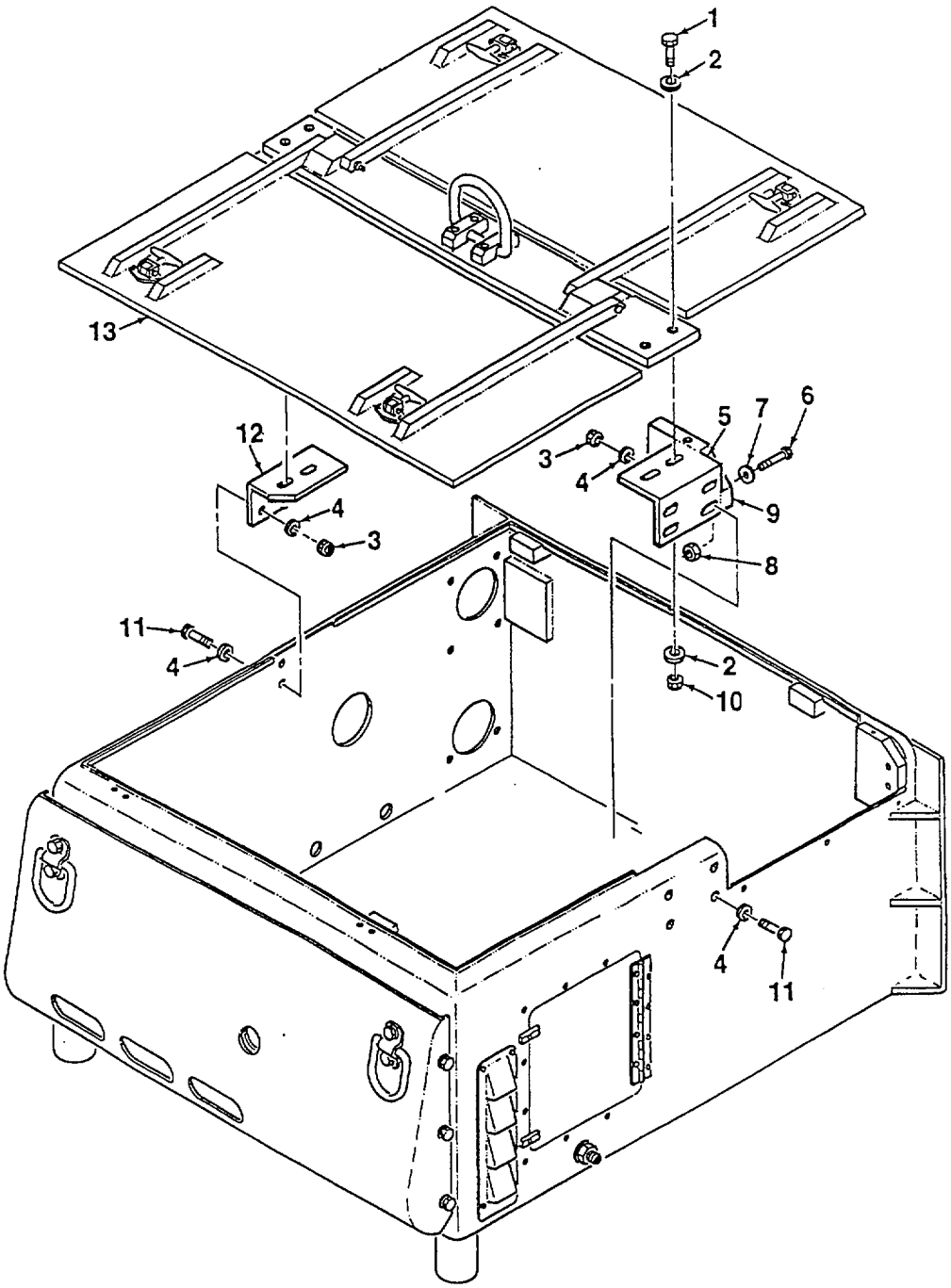

Figure G-2. Cover Assembly and Mounting Brackets

ITEM NO.	SMR CODE	NSN	CAGEC	PART NUMBER	DESCRIPTION & USABLE ON CODE	QTY
					GROUP 00 MEP-952B AUXILIARY POWER UNIT	
					FIGURE G-2	
1	PAOZZ	5305-01-325-8388	96906	MS90725-113	SCREW, CAP, HEXAGON H	4
2	PAOZZ	5310-00-809-5997	96906	MS27183-17	WASHER, FLAT	8
3	PAOZZ		96906	MS17829-6C	NUT, SELF-LOCKING	8
4	PAOZZ	5310-00-641-9464	96906	MS27183-13	WASHER, FLAT	16
5	XBOZZ		62502	96-9076	BRACKET	1
6	PAOZZ	5305-00-990-1347	96906	MS35190-292	SCREW, MACHINE	2
7	PAOZZ	5310-00-619-4848	96906	MS27183-51	WASHER, FLAT	2
8	PAOZZ		96906	MS27189-4C	NUT, SELF-LOCKING	2
9	XBOZZ		62502	96-9077	BLOCK	1
10	PAOZZ		96906	MS17829-8C	NUT, SELF-LOCKING	4
11	PAOZZ	5305-00-543-2419	96906	MS90725-61	SCREW, CAP, HEXAGON, H	4
12	XBOZZ		62502	96-9075	BRACKET	1
13	XBOOO		62502	96-9002	COVER ASSEMBLY (SEE FIGURE G-6 FOR PARTS BREAKDOWN)	1

END OF FIGURE

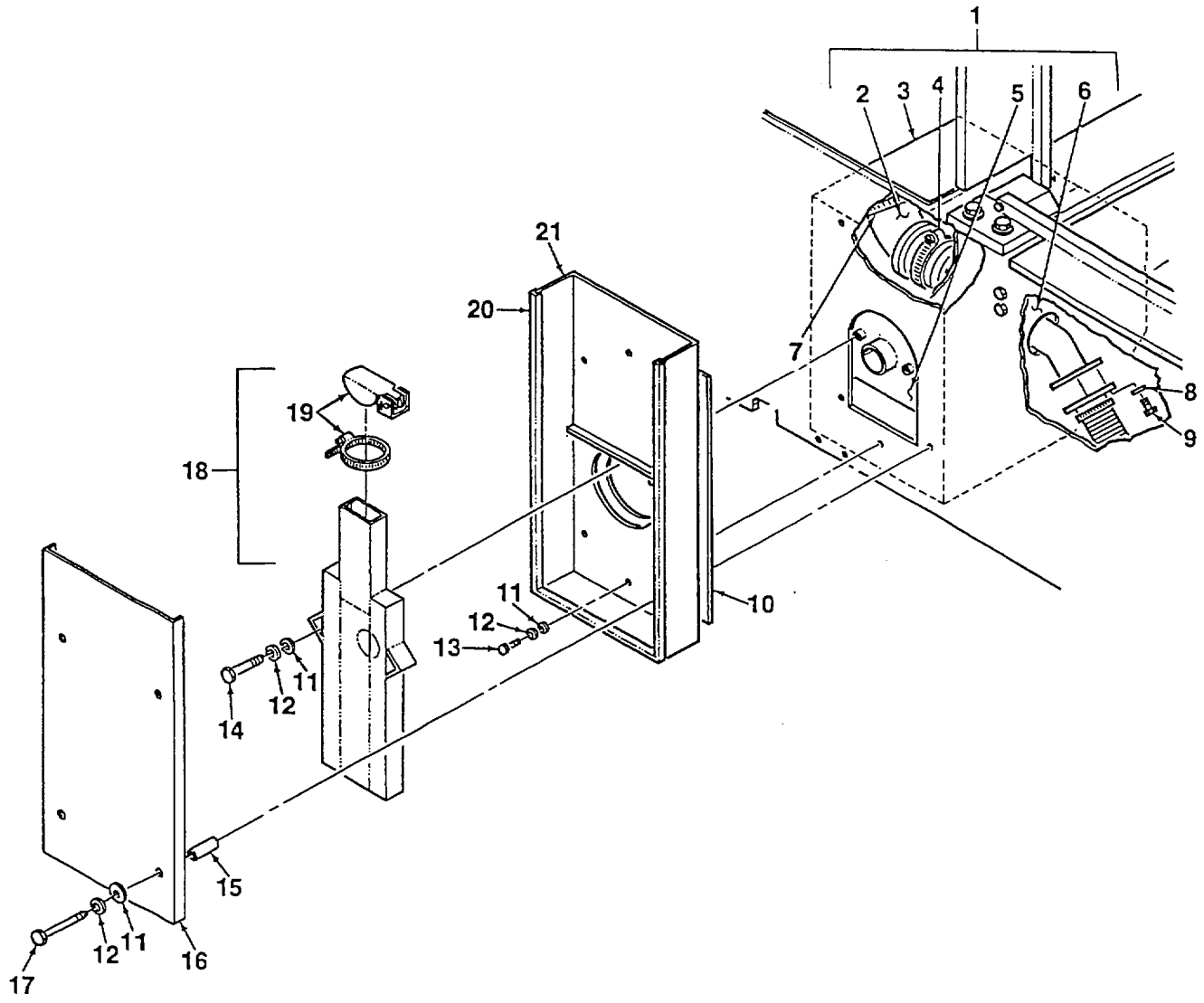

Figure G-3. External Muffler and Internal Exhaust Assembly

ITEM NO.	SMR CODE	NSN	CAGEC	PART NUMBER	DESCRIPTION & USABLE ON CODE	QTY
					GROUP 00 MEP-952B AUXILIARY POWER UNIT	
					FIGURE G-3	
1	XBOOO		62502	96-9235	EXHAUST ASSEMBLY	1
2	PAOZZ		62502	96-9240	HOSE	1
3	PAOZZ		22165	105CFH1-8	MUFFLER	1
4	PAOZZ		96906	MS25842-14	CLAMP, HOSE	1
5	PAOZZ		62502	96-9229	GASKET	1
6	PAOZZ		0FDK1	70064	BLANKET, MUFFLER	1
7	PAOZZ		96906	MS35842-14	CLAMP	1
8	PAOZZ	5310-00-407-9566	96906	MS35338-45	WASHER, LOCK	2
9	PAOZZ		96906	MS16997-82	SCREW, SOCKET HEAD	2
10	PAOZZ		62502	96-9229	GASKET	1
11	PAOZZ	5310-00-641-9464	96906	MS27183-13	WASHER, FLAT	8
12	PAOZZ	5310-00-616-2200	96906	MS35337-46	WASHER, LOCK	8
13	PAOZZ	5305-00-543-2419	96906	MS90725-61	SCREW, CAP, HEXAGON, H	2
14	PAOZZ	5305-00-269-3218	96906	MS90725-68	SCREW, CAP, HEXAGON, H	2
15	PAOZZ	5310-00-877-5798	62502	96-9224	SPACER	4
16	XBOZZ		62502	96-9222	COVER, EXTERNAL MUFFLER	1
17	PAOZZ	5305-01-351-0787	96906	MS90725-73	SCREW, CAP, HEXAGON, H	4
18	PAOZZ		62502	96-9227	MUFFLER	1
19	XBOZZ		62502	96-9226	CAP	1
20	MOOZZ		62502	96-9223	INSULATION, MAKE FROM X-102 (0CYC7), CUT TO 42.5 IN.	1
21	XBOZZ		62502	96-9228	HOUSING	1

END OF FIGURE

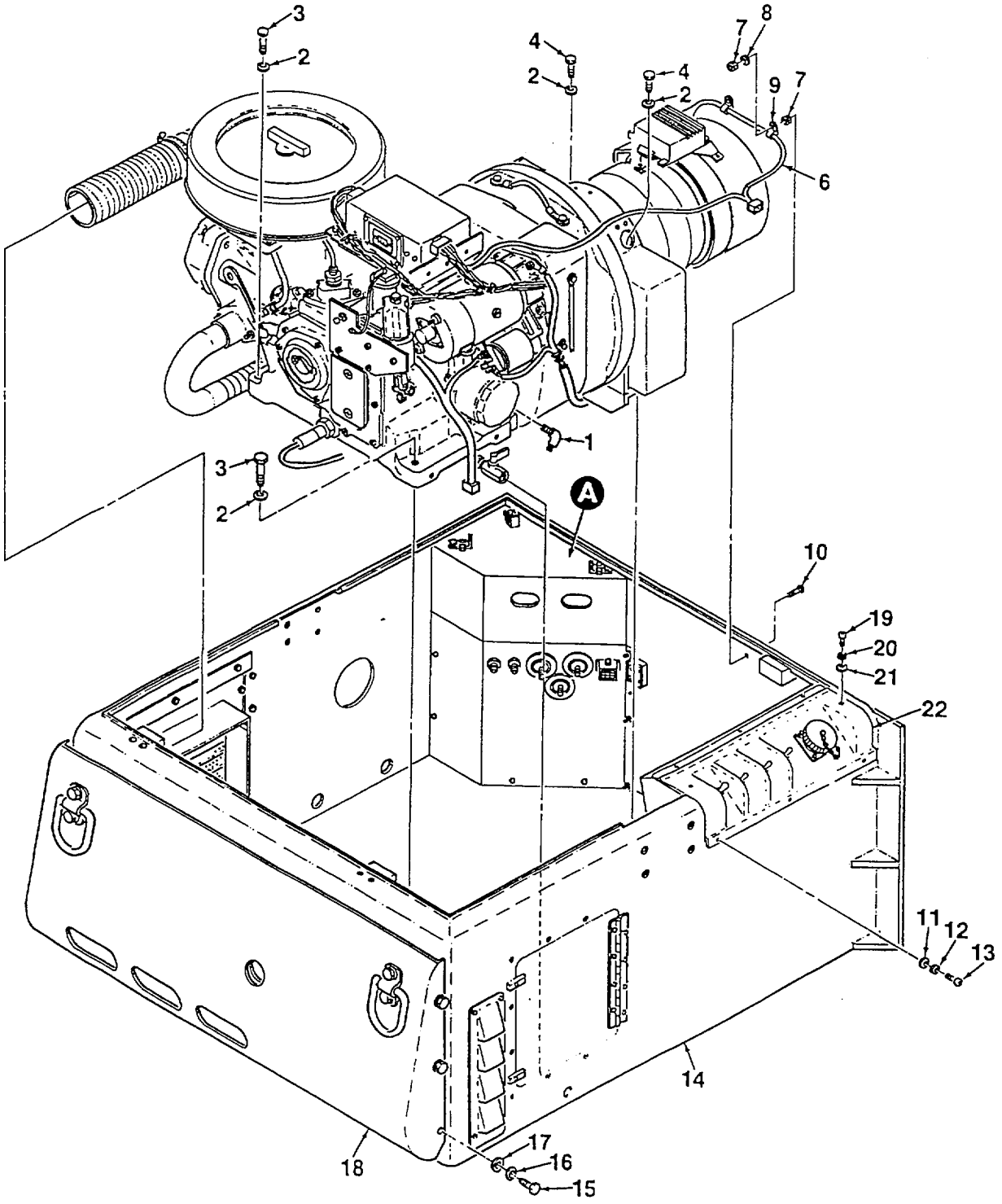

Figure G-4. Engine/Alternator Assembly Installation
(Sheet 1 of 2)

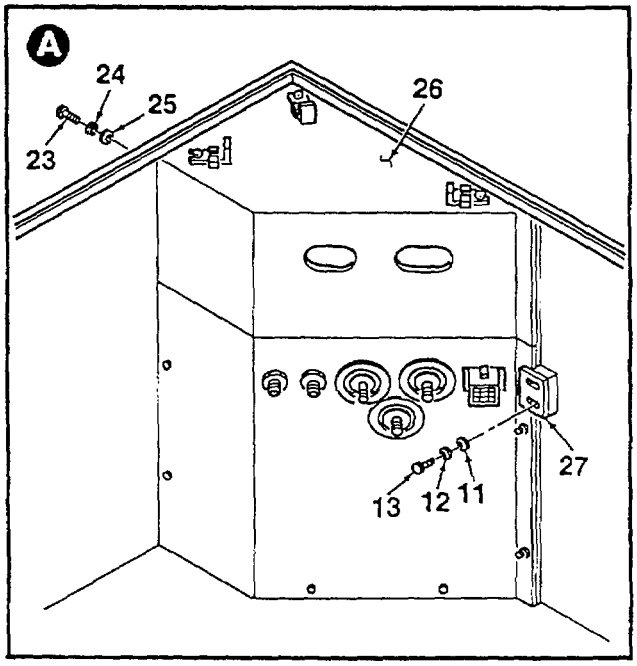

Figure G-4. Engine/Alternator Assembly Installation (Sheet 2 of 2)

ITEM NO.	SMR. CODE	NSN	CAGEC	PART NUMBER	DESCRIPTION & USABLE ON CODE	QTY
					GROUP 00 MEP-952B AUXILIARY POWER UNIT	
					FIGURE G-4	
1	PAOZZ		0AKY4	C5506X6	ELBOW	1
2	PAOZZ		0VKD6	96-9247-6	WASHER, LOCK, M12	4
3	PAOZZ		0VKD6	96-9249-128SH-S	SCREW, M12X55MM, SHCS	2
4	PAOZZ		0VKD6	96-9249-125SH-S	SCREW, M12X40MM, SHCS	2
5	XBFFF		62502	96-9250	ENGINE ALTERNATOR ASSEMBLY (SEE FIGURE G-17 FOR PARTS BREAKDOWN)	1
6	PAOZZ		62502	96-9261	CABLE ASSEMBLY	1
7	PAOZZ	5310-00-877-5798	96906	MS21044-D3	NUT, SELF-LOCKING, HE	4
8	PAOZZ	5310-00-167-0818	88044	AN960-10	WASHER, FLAT	4
9	PAOZZ		96906	MS21919-12	CLAMP, HOSE	2
10	PAOZZ	5305-00-989-7343	96906	MS35191-276	SCREW, MACHINE	2
11	PAOZZ	5310-00-167-0818	88044	AN960-10	WASHER, FLAT	3
12	PAOZZ	5310-00-045-3296	96906	MS35338-43	WASHER, LOCK	3
13	PAOZZ	5305-00-993-1851	96906	MS35207-267	SCREW, MACHINE	3
14	XBOOO		62502	96-9001	CASE ASSEMBLY (SEE FIGURE G-7 FOR PARTS BREAKDOWN)	1
15	PAOZZ	5305-00-543-2419	96906	MS90725-61	SCREW, CAP, HEXAGON, H	6
16	PAOZZ	5310-00-616-2200	96906	MS35337-46	WASHER, LOCK	6
17	PAOZZ	5310-00-641-9464	96906	MS27183-13	WASHER, FLAT	6
18	XBOOO		62502	96-9035	COVER (NOSEPIECE) ASSEMBLY (SEE FIGURE G-5 FOR PARTS BREAKDOWN)	1
19	PAOZZ	5305-00-225-3839	96906	MS90725-8	SCREW, CAP, HEXAGON H	2
20	PAOZZ	5310-00-582-5965	96906	MS35338-44	WASHER, LOCK	2
21	PAOZZ	5310-01-398-0341	80205	NAS1149G0432P	WASHER, FLAT	2
22	PAOOO		62502	96-9440	CONTROL PANEL ASSEMBLY, LOCAL (SEE FIGURE G-11 FOR PARTS BREAKDOWN)	1
23	PAOZZ	5306-00-225-8499	96906	MS90725-34	BOLT, MACHINE	6
24	PAOZZ	5310-00-407-9566	96906	MS35338-45	WASHER, LOCK	6
25	PAOZZ	5310-00-809-3078	96906	MS27183-11	WASHER, FLAT	6
26	XBOOO		62502	96-9150	MODULE ASSEMBLY, FUEL (SEE FIGURE G-13 FOR PARTS BREAKDOWN)	1
27	PAOZZ		62520	96-9122	PLATE	1

END OF FIGURE

This Page
Intentionally Left Blank

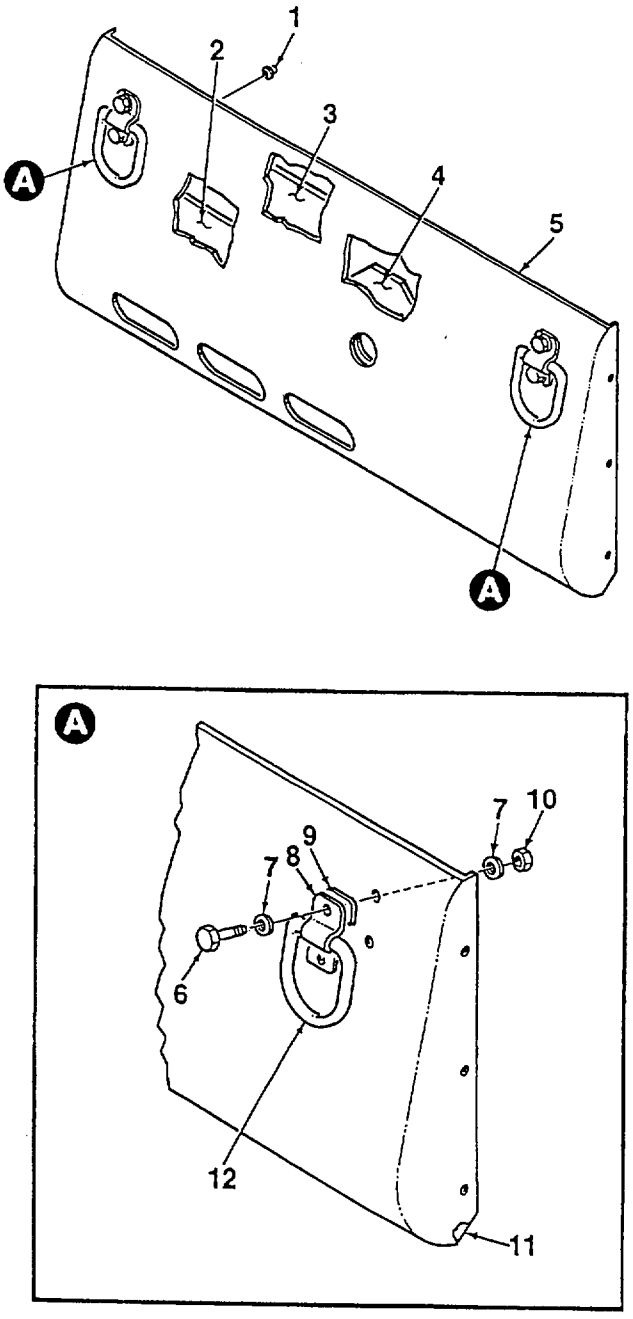

Figure G-5. Nosepiece Assembly

ITEM NO.	SMR. CODE	NSN	CAGEC	PART NUMBER	DESCRIPTION & USABLE ON CODE	QTY
					GROUP 01 COVER ASSEMBLY (NOSEPIECE)	
					FIGURE G-5	
1	PAOZZ		F9948	101-301-191	CAP	6
2	PAOZZ		62502	96-9039	INSULATION	1
3	PAOZZ		62502	96-9098	INSULATION, STRIP	1
4	PAOZZ		62502	96-9040	INSULATION	1
5	PAOZZ		62502	96-9041	NOSEPIECE	1
6	PAOZZ	5305-00-543-2419	96906	MS90725-61	SCREW, CAP, HEXAGON, H	4
7	PAOZZ	5310-00-641-9464	96906	MS27183-13	WASHER, FLAT	8
8	PAOZZ		19220	1170-2	CLIP	2
9	PAOZZ		62502	96-9038	GASKET	2
10	PAOZZ		96906	MS17829-6C	NUT, SELF-LOCKING,	4
11	MOOZZ		62502	96-9223	INSULATION, MAKE FROM X-102 (0CYC7), CUT TO 30.25 IN.	1
12	PAOZZ		19220	1170-3	RING	2

END OF FIGURE

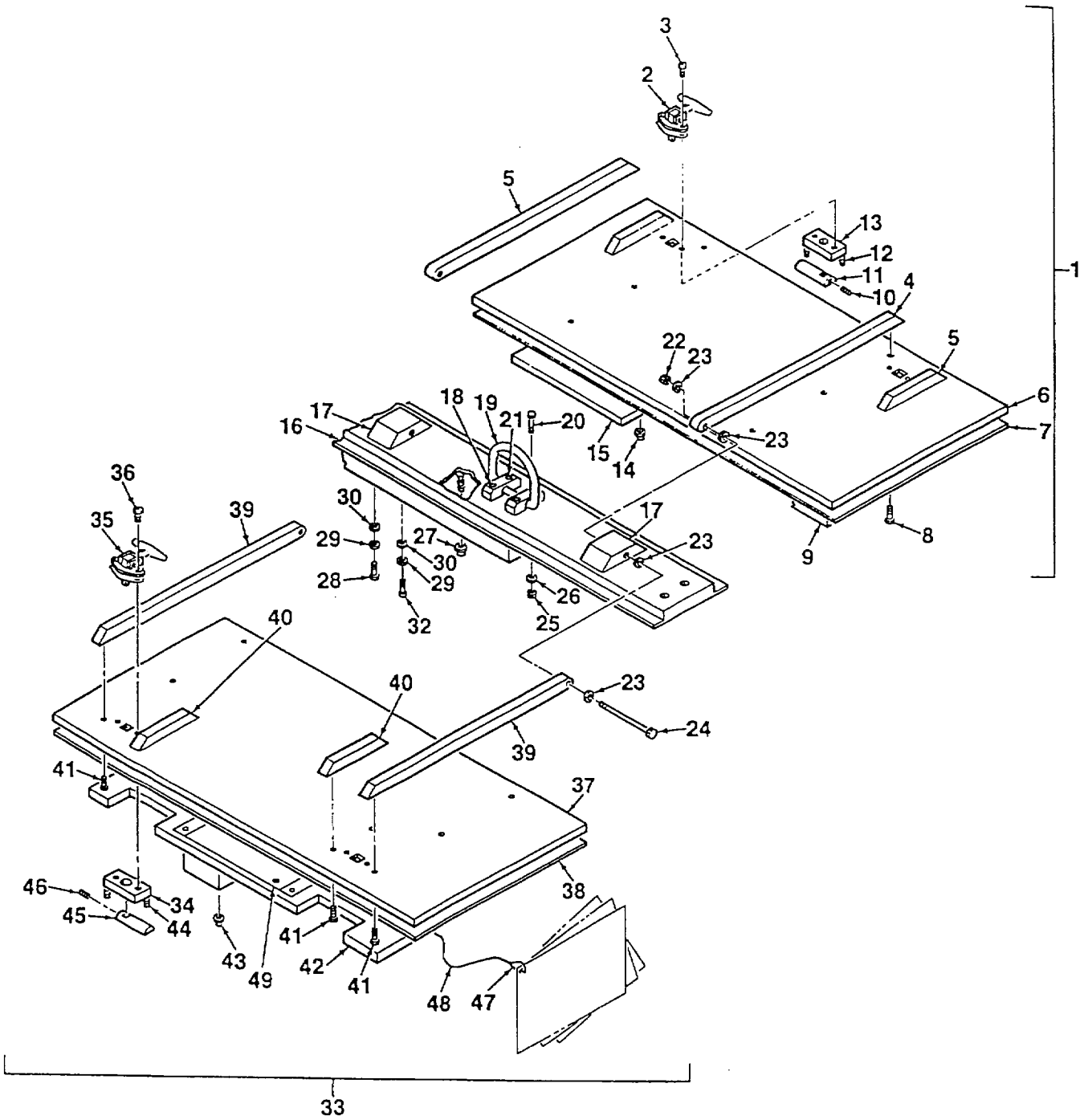

Figure G-6. Cover (Lid) Assembly

ITEM NO.	SMR. CODE	NSN	CAGEC	PART NUMBER	DESCRIPTION & USABLE ON CODE	QTY
					GROUP 02 COVER ASSEMBLY	
					FIGURE G-6	
1	XBOOO		62502	96-9020	COVER ASSEMBLY	1
2	PAOZZ		62502	96-9012	T-LATCH ASSEMBLY	2
3	PAOZZ	5305-00-988-1727	96906	MS35206-283	SCREW, MACHINE	4
4	XBOZZ		62502	96-9018	BLOCK	2
5	XBOZZ		62502	96-9017	HINGE	2
6	XBOZZ		62502	96-9033	COVER	1
7	PAOZZ		62502	96-9032	INSULATION	1
8	PAOZZ		96906	MS35191-303	SCREW	10
9	PAOZZ		62502	96-9028	INSULATION	1
10	PAOZZ		88044	AN565-1032-6	SCREW, SET	2
11	PAOZZ		62502	96-9011	PAWL	2
12	PAOZZ		88044	AN565-416-20	SCREW, SET	4
13	PAOZZ		62502	96-9013	BLOCK	2
14	PAOZZ		F9948	101-301-191	CAP	2
15	PAOZZ		62502	96-9029	INSULATION	1
16	XBOZZ		62502	96-9008	CROSSMEMBER	1
17	XBOZZ		62502	96-9006	BLOCK	2
18	PAOZZ		62502	96-9005	BLOCK	2
19	PAOZZ		9X737	B40R	RING, HOIST	1
20	PAOZZ		96906	MS16997-84	SCREW, SOCKET, CAP	4
21	PAOZZ		62502	96-9009	INSULATION	1
22	PAOZZ		96906	MS17829-4C	NUT, SELF-LOCKING, HE	2
23	PAOZZ	5310-00-809-5997	96906	MS51859-17	WASHER, FLAT	8
24	PAOZZ		96906	MS90725-26	SCREW, CAP, HEXAGON, H	2
25	PAOZZ		96906	MS17829-6C	NUT, SELF-LOCKING	4
26	PAOZZ	5310-00-641-9464	96906	MS27183-13	WASHER, FLAT	4
27	PAOZZ		F9948	101-301-191	CAP	4
28	PAOZZ	5305-00-226-4831	96906	MS90725-38	BOLT, MACHINE	3
29	PAOZZ	5310-00-637-9541	96906	MS35338-46	WASHER, LOCK	4
30	PAOZZ	5310-00-641-9464	96906	MS27183-13	WASHER, FLAT	4
31	PAOZZ		62502	96-9007	INSULATION	1
32	PAOZZ	5305-00-269-3211	96906	MS90725-60	SCREW, CAP, HEXAGON, H	1
33	XBOOO		62502	96-9010	COVER ASSEMBLY	1
34	PAOZZ		62502	96-9013	BLOCK	2
35	PAOZZ		54836	10-4855-AU	T-LATCH ASSEMBLY	2
36	PAOZZ	5305-00-988-1727	96906	MS35206-283	SCREW, MACHINE	4
37	XBOZZ		62502	96-9019	COVER	1
38	PAOZZ		62502	96-9032	INSULATION	1
39	XBOZZ		62502	96-9017	HINGE	2
40	XBOZZ		62502	96-9018	BLOCK	2
41	PAOZZ		96906	MS35191-303	SCREW	10
42	PAOZZ		62502	96-9014	INSULATION	1

ITEM NO.	SMR. CODE	NSN	CAGEC	PART NUMBER	DESCRIPTION & USABLE ON CODE	QTY
					FIGURE G-6 (CONTINUED)	
43	PAOZZ		F9948	101-301-191	CAP	8
44	PAOZZ		88044	AN565-416-20	SCREW, SET	4
45	PAOZZ		62502	96-9011	PAWL	2
46	PAOZZ		88044	AN565-1032-6	SCREW, SET	2
47	PAOZZ		3A054	3896T1	SLEEVE, COMPRESSION	2
48	PAOZZ		3A054	3458T44	CABLE, 1/16 IN. DIA. X 18 IN. LG.	1
49	XBOZZ		62502	96-9027	HOLDER, CARD	1

END OF FIGURE

This Page
Intentionally Left Blank

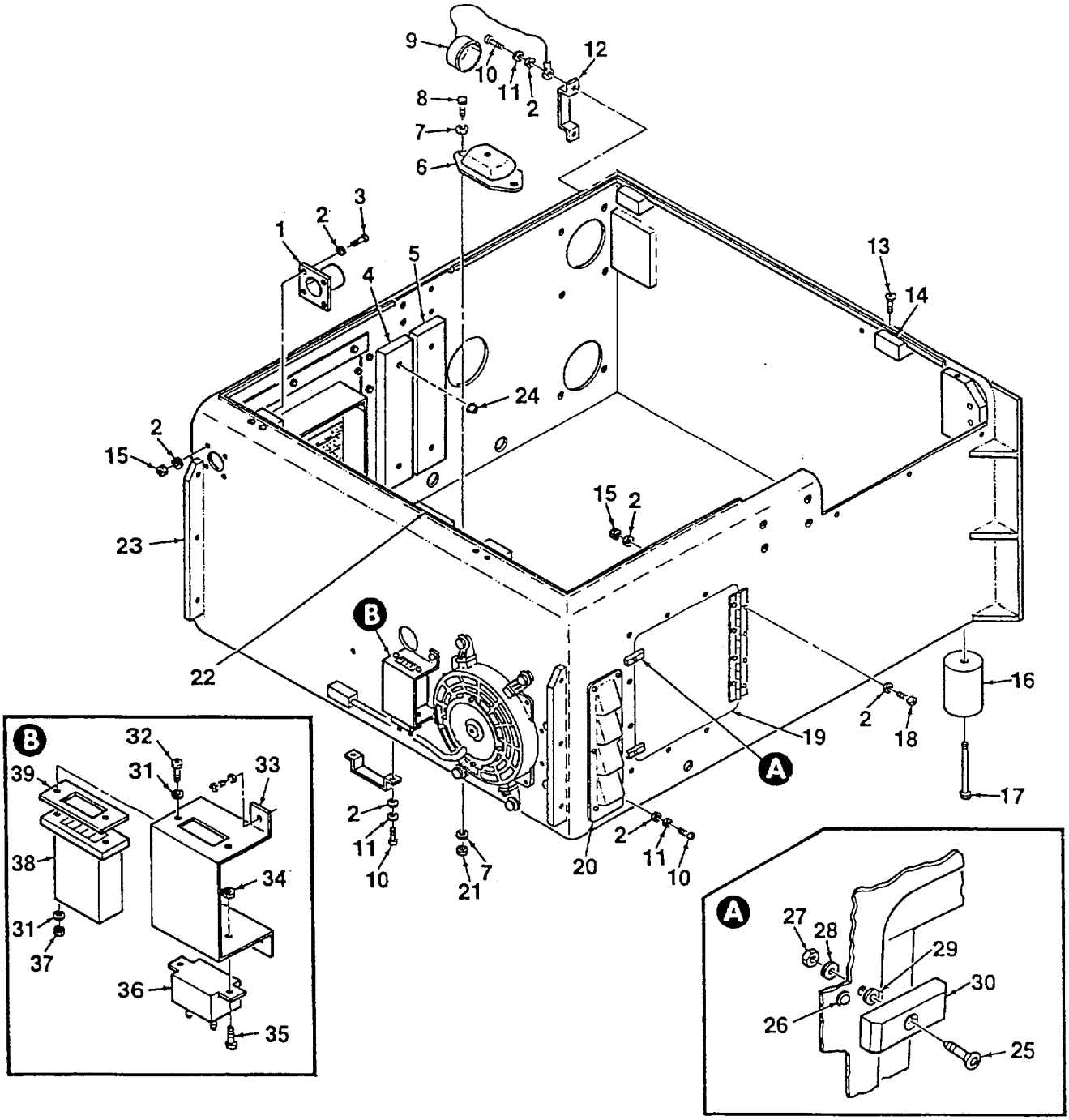

Figure G-7. Case Assembly (Enclosure) Components

ITEM NO.	SMR. CODE	NSN	CAGEC	PART NUMBER	DESCRIPTION & USABLE ON CODE	QTY
					GROUP 03 CASE ASSEMBLY	
					FIGURE G-7	
1	PAOZZ		62502	96-9079	DUCT	1
2	PAOZZ	5310-00-167-0818	88044	AN960-10	WASHER, FLAT	28
3	PAOZZ	5305-00-993-1848	96906	MS35207-265	SCREW, MACHINE	4
4	PAOZZ		62502	96-9099	INSULATION	1
5	PAOZZ		62502	96-9098	INSULATION	1
6	PAOZZ		0DG59	17/1600/1	MOUNT	4
7	PAOZZ	5310-00-641-9464	96906	MS27183-13	WASHER, FLAT	16
8	PAOZZ	5305-00-543-2419	96906	MS90725-61	SCREW, CAP, HEXAGON, H	8
9	PAOZZ	5935-01-097-9974	19207	11674728	COVER, NATO RECEPTAC	1
10	PAOZZ	5305-00-989-7434	96906	MS35207-263	SCREW, MACHINE	14
11	PAOZZ	5310-00-045-3296	96906	MS35338-43	WASHER, LOCK	14
12	PAOZZ		62502	96-9116	HANDLE	4
13	PAOZZ		96906	MS35190-273	SCREW, MACHINE	8
14	PAOZZ		62502	96-9089	BLOCK	4
15	PAOZZ		96906	MS21044-D3	NUT, SELF-LOCKING, HE	8
16	PAOZZ		62502	96-9114	SPACER	4
17	PAOZZ	5305-00-983-7470	96906	MS16997-153	SCREW, CAP, SOCKET HE	4
18	PAOZZ	5305-00-993-1851	96906	MS35207-267	SCREW, MACHINE	4
19	XBOZZ		62502	96-9045	DOOR ASSEMBLY, OIL FILTER ACCESS	1
20	PAOZZ		62502	96-9083	HEADER ASSEMBLY	1
21	PAOZZ		96906	MS17829-6C	NUT, SELF-LOCKING	8
22	PAOZZ		62502	96-9095	INSULATION	1
23	XBFZZ		62520	96-9120	CASE ASSEMBLY	1
24	PAOZZ		F9948	101-301-191	CAP	6
25	PAOZZ	5305-00-978-9381	96906	MS16997-63	SCREW, CAP, SOCKET HE	4
26	PAOZZ		04EE5	10-4BSSN	PLUNGER	2
27	PAOZZ		96906	MS17829-4C	NUT, SELF-LOCKING, HE	4
28	PAOZZ	5310-00-619-4848	96906	MS27183-51	WASHER, FLAT	4
29	PAOZZ		07851	W0367-006	WASHER, WAVE, 1/4	4
30	PAOZZ		62502	96-9106	LATCH	2
31	PAOZZ		96906	MS27183-43	WASHER, FLAT	4
32	PAOZZ		96906	MS35206-232	SCREW, MACHINE	2
33	PAOZZ		62502	28014206	BRACKET	1
34	PAOZZ		96906	MS21044-D3	NUT, SELF-LOCKING	2
35	PAOZZ		96906	MS35207-261	SCREW, MACHINE	2
36	PAOZZ		13445	30172-15	BREAKER, CIRCUIT	1
37	PAOZZ		96906	MS21044N06	NUT, SELF-LOCKING	2
38	PAOZZ		74440	85094	METER, HOUR	1
39	PAOZZ		62502	96-9359-1	BEZEL	

END OF FIGURE

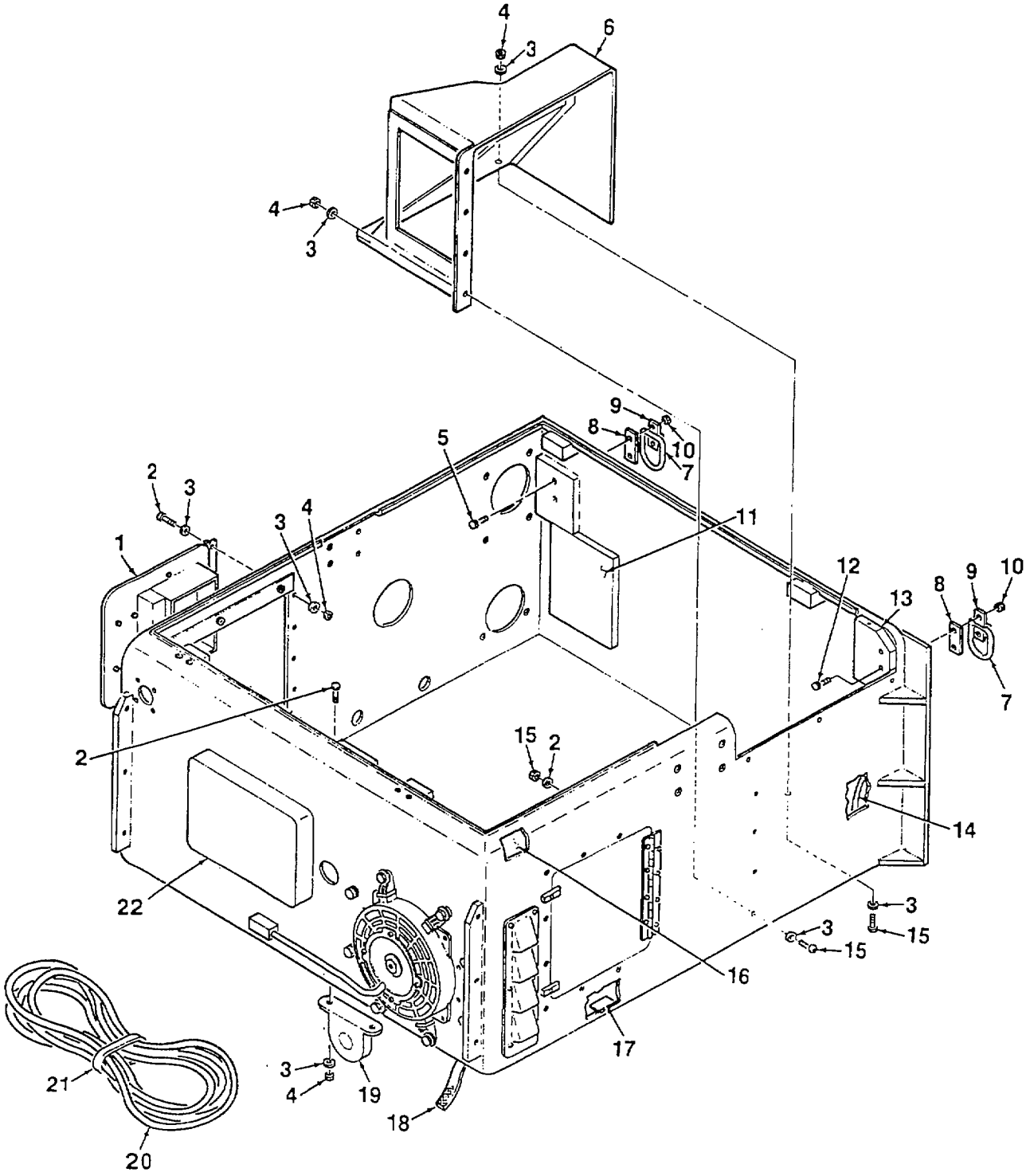

Figure G-8. Case Assembly (Enclosure) Components

ITEM NO.	SMR. CODE	NSN	CAGEC	PART NUMBER	DESCRIPTION & USABLE ON CODE	QTY
					GROUP 03 CASE ASSEMBLY	
					FIGURE G-8	
1	XBOOO		62502	96-9050	DOOR ASSEMBLY, VALVE ACCESS	1
2	PAOZZ	5305-00-993-1851	96906	MS35207-267	SCREW, MACHINE	6
3	PAOZZ	5310-00-167-0818	88044	AN960-10	WASHER, FLAT	13
4	PAOZZ	5310-00-877-5798	96906	MS21044-D3	NUT, SELF-LOCKING, HE	13
5	PAOZZ		96906	MS35190-319	SCREW, PHIL HD	2
6	XBOZZ		62502	96-9092	DUCT ASSEMBLY	1
7	PAOZZ		19220	1170-3	RING	2
8	PAOZZ		62502	96-9038	GASKET	2
9	PAOZZ		19220	1170-2	CLIP	2
10	PAOZZ		96906	MS17829-6C	NUT, SELF-LOCKING	4
11	PAOZZ		62502	96-9112	INSULATOR	1
12	PAOZZ		96906	MS35190-322	SCREW, PHIL HD, .375X 16X1.75	2
13	PAOZZ	5305-00-225-3839	62502	96-9077	BLOCK	1
14	PAOZZ	5310-00-582-5965	62502	96-9124	INSULATION	1
15	PAOZZ	5310-01-398-0341	96906	MS35207-265	SCREW, MACHINE	7
16	PAOZZ		62502	96-9097	INSULATION	1
17	PAOZZ		62502	96-9111	NAMEPLATE, DIRECTION INDICATOR	1
18	PAOZZ	5305-00-993-1848	0ATZ6	3706T131	STRAP	1
19	PAOZZ		0ATZ6	11355T29	CLAMP	1
20	PAOZZ		62502	96-9145	HOSE, FUEL, AUXILIARY	1
21	PAOZZ		0ATZ6	29695T91	STRAP	1
22	PAOZZ		62502	96-9094	INSULATION	1

END OF FIGURE

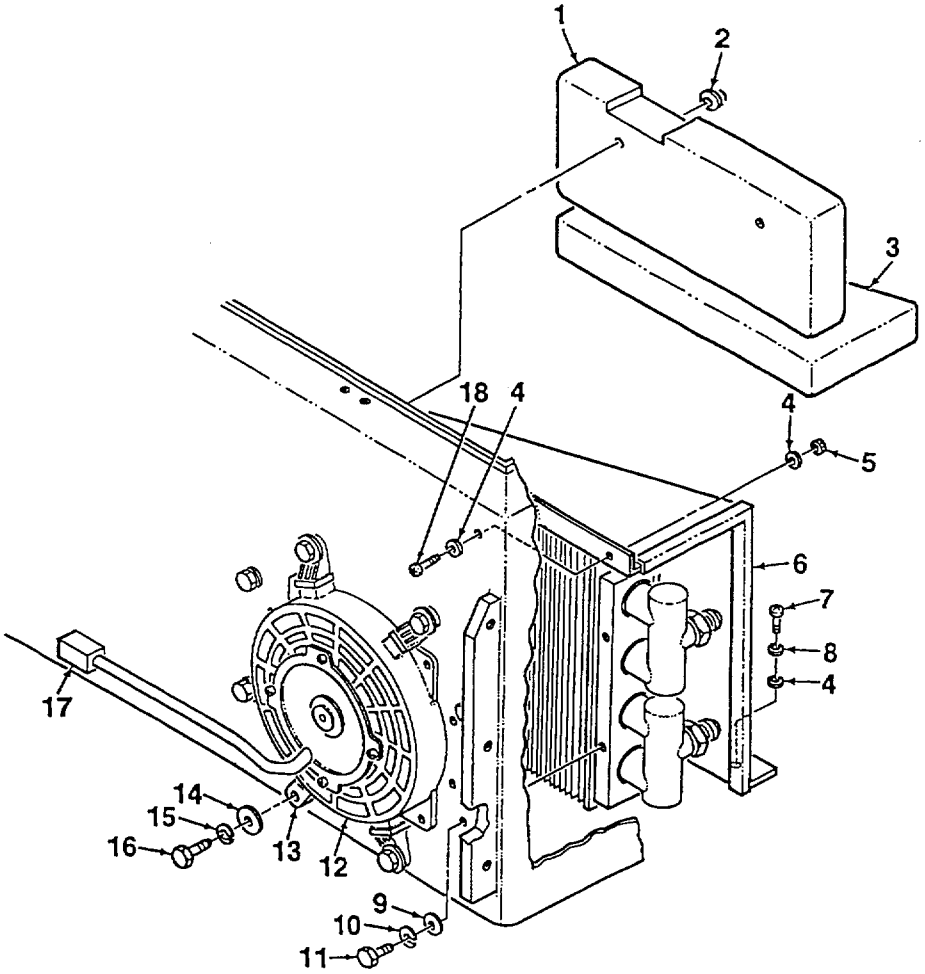

Figure G-9. Fan and Oil Cooler Assemblies

ITEM NO.	SMR. CODE	NSN	CAGEC	PART NUMBER	DESCRIPTION & USABLE ON CODE	QTY
					GROUP 03 CASE ASSEMBLY	
					FIGURE G-9	
1	PAOZZ		62502	96-9096	INSULATION	1
2	PAOZZ		F9948	101-301-191	CAP	2
3	PAOZZ		62502	96-9065	INSULATION	1
4	PAOZZ	5310-00-167-0818	88044	AN960-10	WASHER, FLAT	8
5	PAOZZ	5310-00-877-5798	96906	MS21044-D3	NUT, SELF-LOCKING, HE	4
6	XBOOO		62502	96-9060	OIL COOLER ASSEMBLY (SEE FIGURE G-10 FOR PARTS BREAKDOWN)	1
7	PAOZZ	5305-00-989-7434	96906	MS35207-263	SCREW, MACHINE	3
8	PAOZZ	5310-00-045-3296	96906	MS35338-43	WASHER, LOCK	3
9	PAOZZ	5310-00-641-9464	96906	MS27183-13	WASHER, FLAT	6
10	PAOZZ	5310-00-637-9541	96906	MS35338-46	WASHER, LOCK	6
11	PAOZZ	5305-00-269-3211	96906	MS90725-60	SCREW, CAP, HEXAGON, H	6
12	PAOZZ		62502	3010.0379	FAN	1
13	PAOZZ		62502	3013.0032	BASE	4
14	PAOZZ	5310-00-809-3078	96906	MS27183-11	WASHER, FLAT	4
15	PAOZZ	5310-00-407-9566	96906	MS35338-45	WASHER, LOCK	4
16	PAOZZ	5305-00-115-9526	96906	MS90725-58	SCREW, CAP, HEXAGON, H	4
17	PAOZZ	5950-01-388-0744	34899	0443167251	SHIELDING, BEAD, ELEC	1
18	PAOZZ	5305-00-993-1848	96906	MS35207-265	SCREW, 10-32X3/4, PHI	4

END OF FIGURE

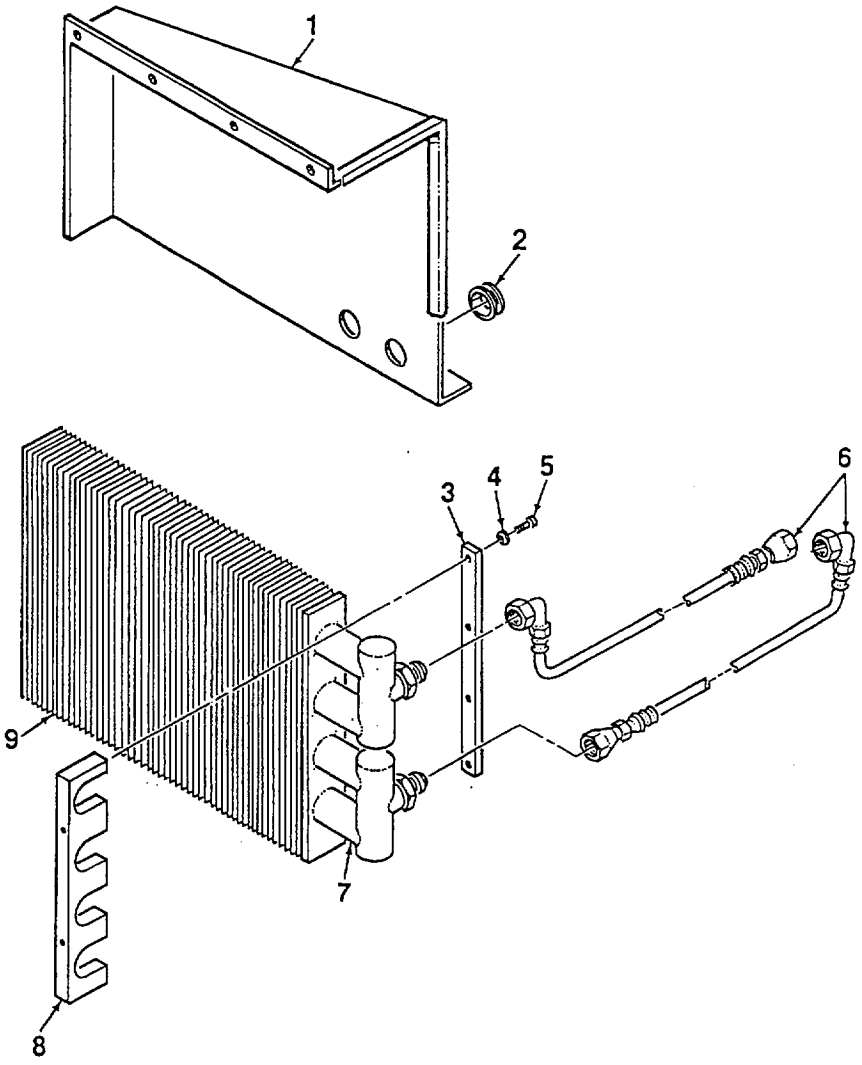

Figure G-10. Oil Cooler Assembly

ITEM NO.	SMR. CODE	NSN	CAGEC	PART NUMBER	DESCRIPTION & USABLE ON CODE	QTY
					GROUP 0301 OIL COOLER ASSEMBLY	
					FIGURE G-10	
1	XBOZZ		62502	96-9066	COVER	1
2	PAOZZ		62502	2196-S	GROMMET	2
3	XBOZZ		62502	96-9070	CLAMP, OIL COOLER	2
4	PAOZZ	5310-00-619-4848	96906	MS27183-51	WASHER, FLAT	6
5	PAOZZ	5305-00-068-0502	96906	MS16997-60	SCREW, CAP, HEXAGON, H	6
6	XBOZZ		0AKY4	24306E-606-666	HOSE ASSEMBLY, OIL COOLER	2
7	XBOZZ		62502	96-9071	INSULATOR, OIL COOLER	6
8	XBOZZ		62502	96-9069	BLOCK	2
9	PAOZZ		50184	ICS10412X-12R B9CAMXS-S-0210	COOLER	1

END OF FIGURE

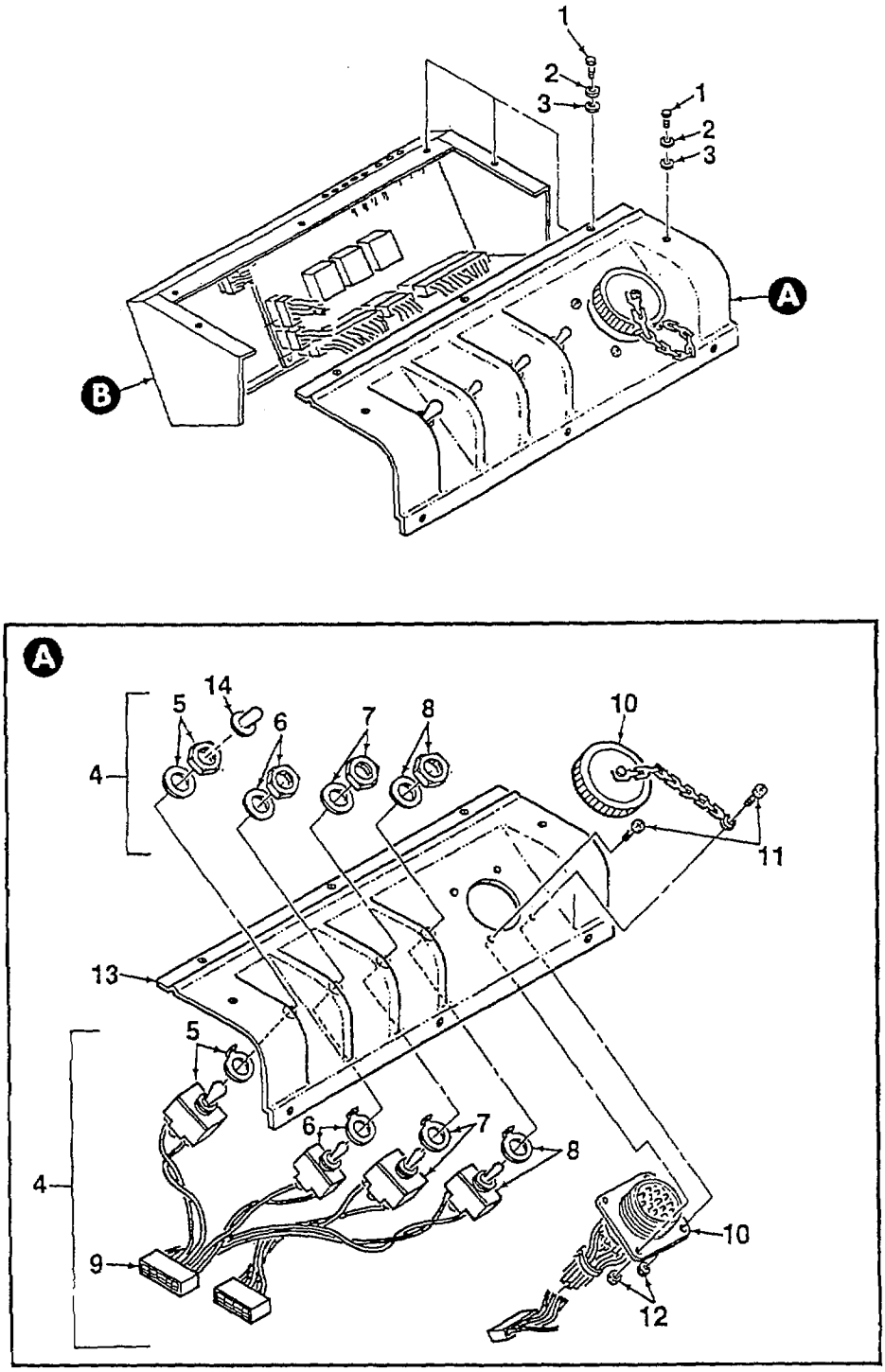

Figure G-11. Local Control Panel Assembly
(Sheet 1 of 2)

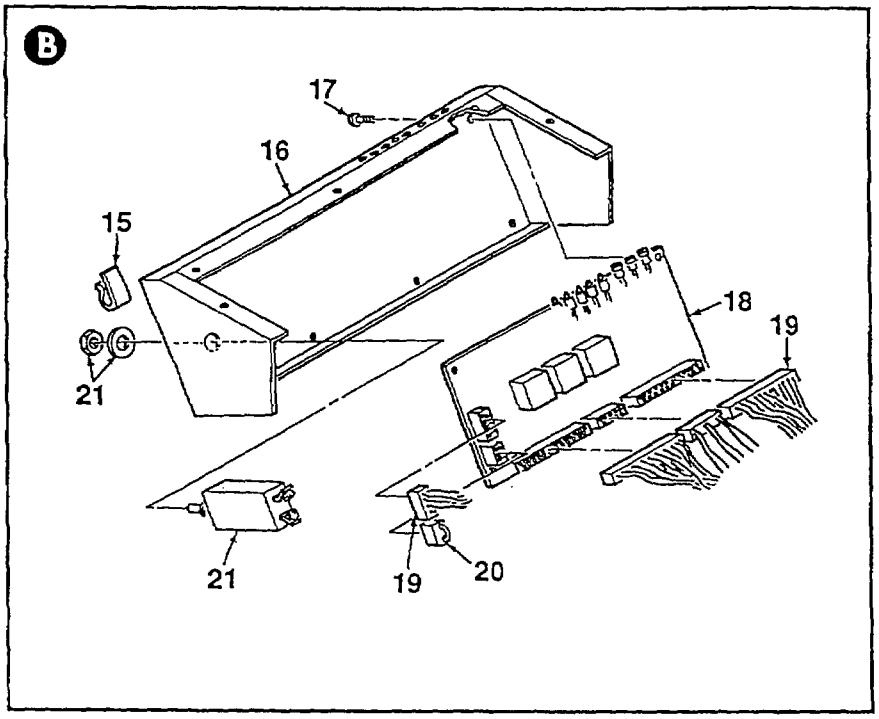

Figure G-11. Local Control Panel Assembly
(Sheet 2 of 2)

ITEM NO.	SMR. CODE	NSN	CAGEC	PART NUMBER	DESCRIPTION & USABLE ON CODE	QTY
					GROUP 04 LOCAL CONTROL PANEL ASSEMBLY	
					FIGURE G-11	
1	PAOZZ	5305-00-993-1848	96906	MS35207-265	SCREW, MACHINE	5
2	PAOZZ	5310-00-167-0818	88044	AN960-10	WASHER, FLAT	5
3	PAOZZ		96906	MS34338-43	WASHER, LOCK	5
4	PAOOO		62502	96-9453	SWITCH ASSEMBLY, CONTROL PANEL, LOCAL	1
5	PAOZZ		1DU88	2TL1-50M	SWITCH, START	1
6	PAOZZ		1DU88	8530K2	SWITCH, PREHEAT	1
7	PAOZZ		1DU88	8510K11	SWITCH, APU ON	1
8	PAOZZ		1DU88	1TL1-3	SWITCH, LOCAL/REMOTE	1
9	PAOZZ		62502	96-9453-1	HARNESS, WIRING	1
10	PAOZZ		62502	96-9450	CONNECTOR HARNESS	1
11	PAOZZ	5305-00-984-4992	96906	MS35206-232	SCREW, MACHINE	4
12	PAOZZ		96906	MS21004-N08	NUT, SELF-LOCKING	4
13	XBOZZ		62502	96-9452	PANEL	1
14	PAOZZ	5310-00-877-5798	13074	50151	SEAL, SWITCH	1
15	PAOZZ		19328	2051	CLAMP, CLIP, PLASTIC	2
16	XBOZZ		62502	96-9462	ENCLOSURE	1
17	PAOZZ	5305-00-984-4983	96906	MS35206-226	SCREW, MACHINE	6
18	PAOZZ		62502	96-9461	PCB ASSEMBLY, LOCAL CONTROL PANEL	1
19	PAOFF		62502	96-9464	HARNESS, WIRING	1
20	PAOZZ		62502	96-9376-04	BODY, CONNECTOR	1
21	PAOZZ	5925-00-074-9180	77342	W23-X1A1G-5	BREAKER, CIRCUIT	1

END OF FIGURE

This Page
Intentionally Left Blank

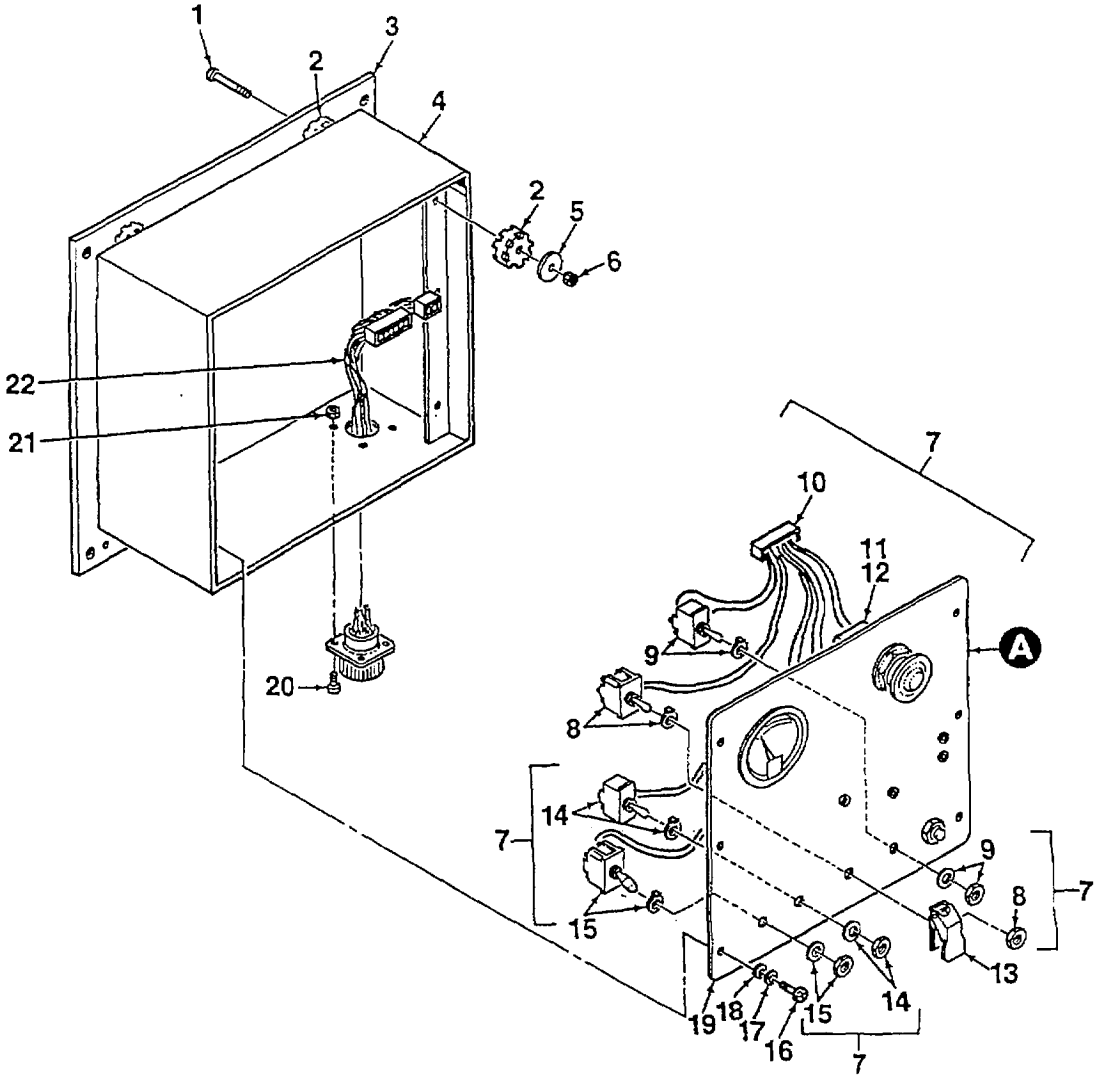

Figure G-12. Remote Control Assembly
(Sheet 1 of 2)

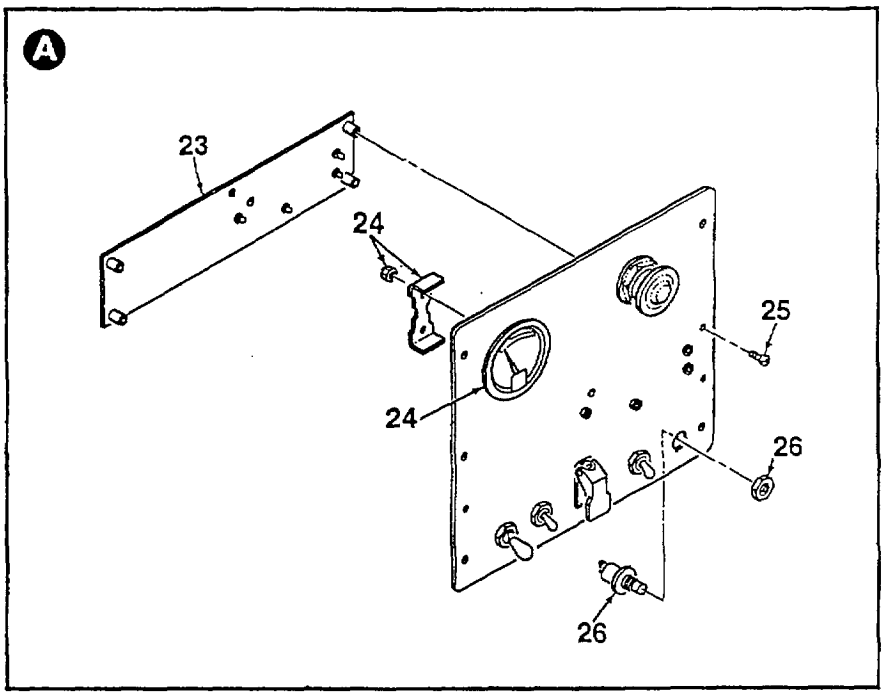

Figure G-12. Remote Control Assembly
(Sheet 2 of 2)

ITEM NO.	SMR. CODE	NSN	CAGEC	PART NUMBER	DESCRIPTION & USABLE ON CODE	QTY
					GROUP 05 REMOTE CONTROL PANEL ASSEMBLY	
					FIGURE G-12	
1	PAOZZ	5305-00-071-2237	96906	MS90725-14	SCREW, CAP, HEXAGON, H	4
2	PAOZZ		3A054	9311K63	ISOLATOR, RIBBED BUS	4
3	XBOZZ		62502	96-9430	PLATE	1
4	XBOZZ		62502	96-9425	HOUSING, REMOTE CONTROL	1
5	PAOZZ	5310-00-167-0766	88044	AN970-4	WASHER, FLAT	4
6	PAOZZ		96906	MS17829-4C	NUT, SELF-LOCKING, HE	4
7	PAOOO		62502	96-9431	SWITCH ASSEMBLY, REMOTE CONTROL	1
8	PAOZZ		1DU88	1TL1-3	SWITCH, BATTLE-SHORT	1
9	PAOZZ		1DU88	8510K11	SWITCH, APU ON	1
10	PAOZZ		62502	96-9431-1	HARNESS, WIRING	1
11	PAOZZ		05VU8	E22GDB2	OPERATOR, PUSH-PULL	1
12	PAOZZ		05VU8	E22B1	CONTACT BLOCK, NC	1
13	PAOZZ		1DU88	8597K1	GUARD, SWITCH	1
14	PAOZZ		1DU88	8530K2	SWITCH, PREHEAT	1
15	PAOZZ		1DU88	2TL1-50M	SWITCH, START	1
16	PAOZZ	5305-00-993-1848	96906	MS35207-265	SCREW, MACHINE	4
17	PAOZZ		96906	MS35338-43	WASHER, LOCK	6
18	PAOZZ		88044	AN960-10	WASHER, FLAT	6
19	XBOZZ		62502	96-9412	PANEL	1
20	PAOZZ	5305-00-984-4992	96906	MS35206-232	SCREW, MACHINE	4
21	PAOZZ		96906	MS21004-N08	NUT, SELF-LOCKING	4
22	PAOZZ		62502	96-9422	CABLE ASSEMBLY, REMOTE CABLE	1
23	PAOZZ		62502	96-9404	PCB ASSEMBLY, REMOTE CONTROL PANEL	1
24	PAOZZ		62502	MS24532-2	METER, VOLT	1
25	PAOZZ	5305-00-984-4983	96906	MS35206-226	SCREW, MACHINE	5
26	PAOZZ	5930-00-681-4394	19203	4001	SWITCH, PUSH	1

END OF FIGURE

This Page
Intention ally Left Blank

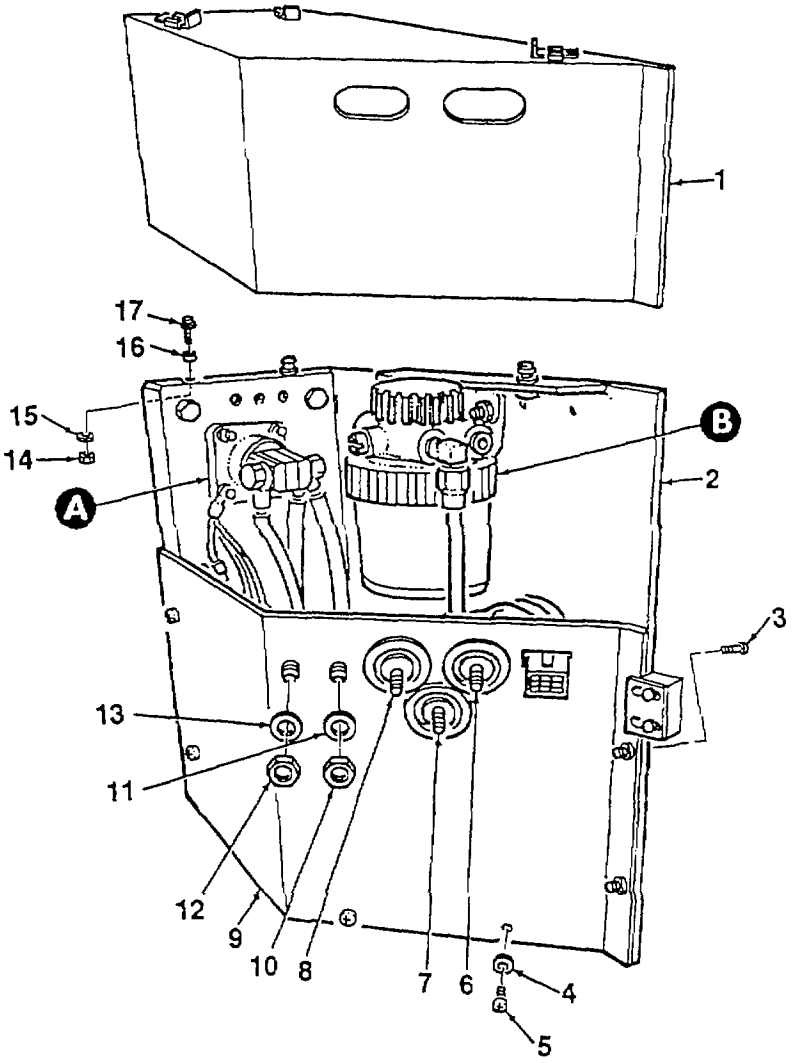

Figure G-13. NATO Receptacle and Filter/Separator Assemblies (Sheet 1 of 2)

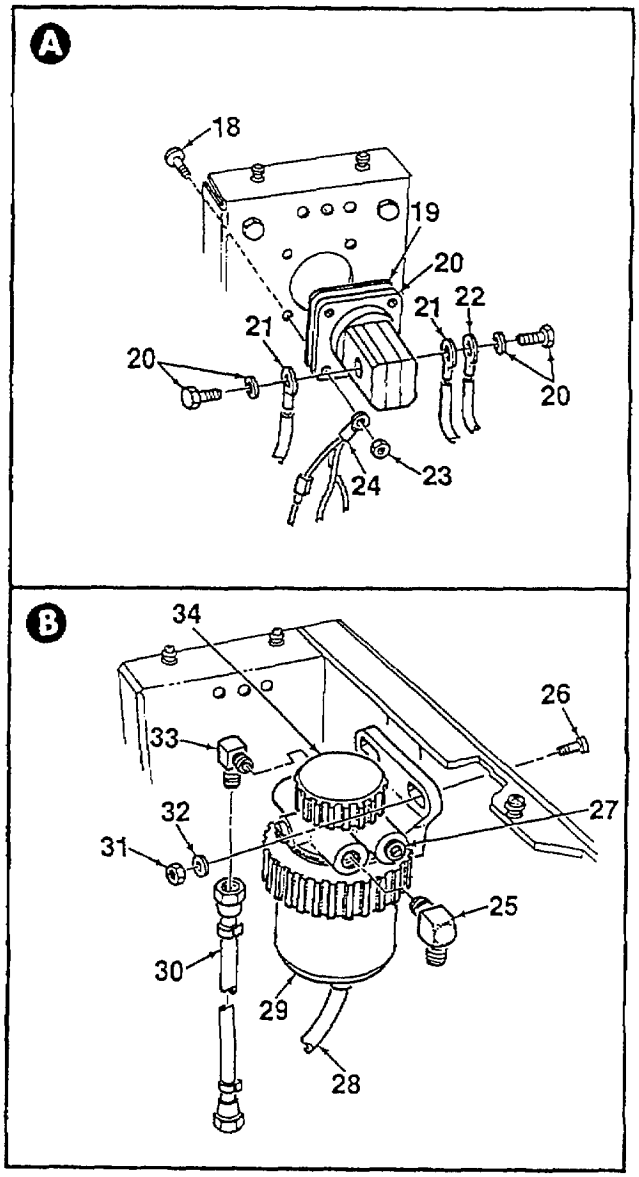

Figure G-13. NATO Receptacle and Filter/Separator Assemblies (Sheet 2 of 2)

ITEM NO.	SMR. CODE	NSN	CAGEC	PART NUMBER	DESCRIPTION & USABLE ON CODE	QTY
					GROUP 06 FUEL MODULE	
					FIGURE G-13	
1	XBOZZ		62502	96-9151	COVER ASSEMBLY	1
2	XBOZZ		62502	96-9205	ENCLOSURE	1
3	PAOZZ	5305-00-984-7361	96906	MS35191-270	SCREW, MACHINE	2
4	PAOZZ	5310-00-045-3296	96906	MS35338-43	WASHER, LOCK	4
5	PAOZZ	5305-00-989-7434	96906	MS35207-263	SCREW, MACHINE	4
6	PAOZZ		62502	96-9156-2	STUD, FEED THRU	1
7	PAOZZ		62502	96-9156-3	STUD, FEED THRU	1
8	PAOZZ		62502	96-9156-1	STUD, FEED THRU	1
9	XBOZZ		62502	96-9160	PLATE	1
10	PAOZZ		96906	MS35691-29	NUT	1
11	PAOZZ		96906	MS35335-36	WASHER	1
12	PAOZZ		96906	MS35691-37	NUT	1
13	PAOZZ		96906	MS35335-37	WASHER	1
14	PAOZZ		96906	MS21044-N06	NUT, SELF LOCKING	3
15	PAOZZ		80205	NAS1149GN832P	WASHER, FLAT	3
16	PAOZZ	5342-01-163-1299	72794	150003	BUSHING	3
17	PAOZZ		96906	MS35206-247	SCREW	3
18	PAOZZ	5305-00-993-1848	96906	MS35207-265	SCREW, MACHINE	4
19	PAOZZ		62502	96-9191	GASKET	1
20	PAOZZ	5935-01-097-9974	19207	11674728	COVER, NATO RECEPTAC	1
21	PAOZZ		62502	96-9158-3	CABLE ASSEMBLY	2
22	PAOZZ		62502	96-9158-4	CABLE ASSEMBLY	1
23	PAOZZ		96906	MS21044-N3	NUT, SELF-LOCKING, HE	4
24	PAOFF		62502	96-9157	CABLE ASSEMBLY	1
25	XBOZZ	4730-00-277-2448	79470	C5405X4X4	ELBOW, PIPE TO TUBE	1
26	PAOZZ		96906	MS35190-291	SCREW	2
27	XBOZZ		0AKY4	3169X4	PLUG	2
28	PAOZZ		62502	96-9166-8	HOSE ASSEMBLY	1
29	PAOZZ		2L549	33260	ELEMENT, SEPARATOR, FILTER	1
30	PAOZZ		62502	96-9166-1	HOSE ASSEMBLY	1
31	PAOZZ		96906	MS17829-4C	NUT, SELF-LOCKING, HE	2
32	PAOZZ	5310-01-398-0341	80205	NAS1149G0432P	WASHER, FLAT	2
33	PAOZZ	4730-01-096-3170	96906	C5405X5X4	ELBOW, PIPE TO TUBE	1
34	PAOZZ		62502	96-9165	FUEL/WATER SEPARATOR ASSEM	1
35	PAOZZ		62502	96-9202	DECAL, PRIMARY FUEL	1

END OF FIGURE

This Page
Intentionally Left Blank

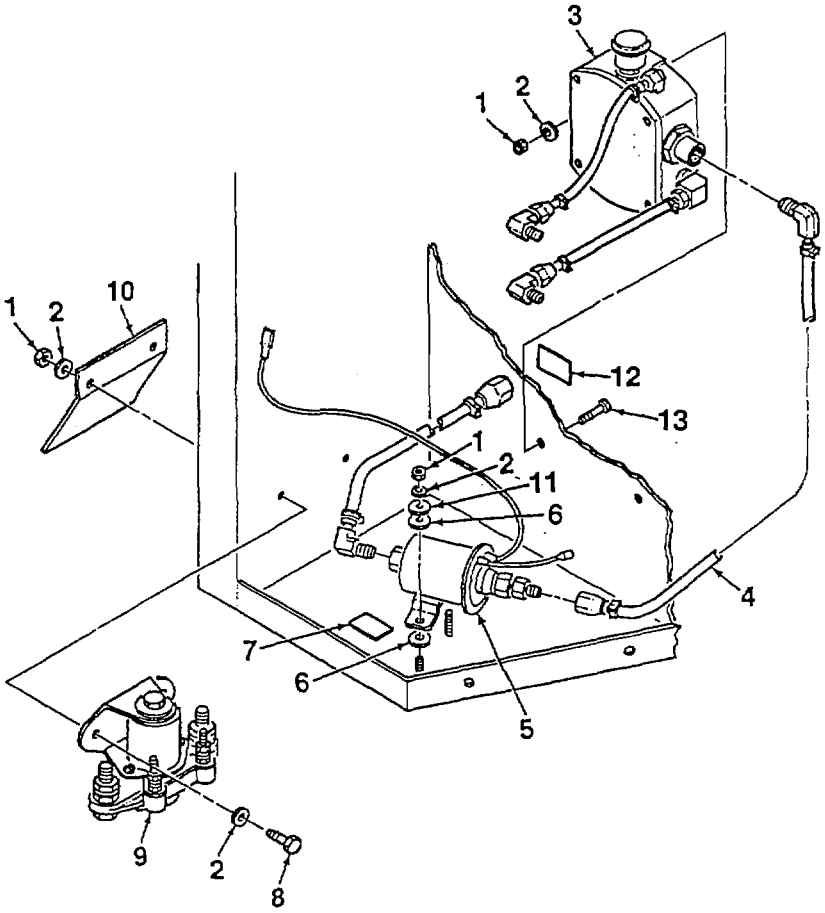

Figure G-14. Fuel Pump and Float Valve Housing Assemblies

ITEM NO.	SMR. CODE	NSN	CAGEC	PART NUMBER	DESCRIPTION & USABLE ON CODE	QTY
					GROUP 06 FUEL MODULE	
					FIGURE G-14	
1	PAOZZ		96906	MS17829-4C	NUT, SELF-LOCKING, HE	2
2	PAOZZ	5310-01-398-0341	80205	NAS1149G0432P	WASHER, FLAT	4
3	XBOOO		62502	96-9175	HOUSING ASSEMBLY (SEE FIGURE G-16 FOR PARTS BREAKDOWN)	1
4	PAOOO		62502	96-9166-3	HOSE ASSEMBLY	1
5	XBOOO		62502	96-9170	PUMP ASSEMBLY (SEE FIGURE G-15 FOR PARTS BREAKDOWN)	1
6	PAOZZ		80205	NAS1515F4H	WASHER, RUBBER	4
7	XBOZZ		62502	96-9204	DECAL, FUEL PUMP	1
8	PAOZZ	5305-00-225-3839	96906	MS90725-8	SCREW, CAP, HEXAGON, H	2
9	PAOZZ		1DU88	6041H202	CONTACTOR	1
10	XBOZZ		62502	96-9196	PLATE	1
11	PAOZZ	5310-00-167-0766	88044	AN970-4	WASHER, FLAT	2
12	XBOZZ		62502	96-9203	DECAL, FLOAT BOWL	1
13	PAOZZ		96906	MS35190-291	SCREW	2

END OF FIGURE

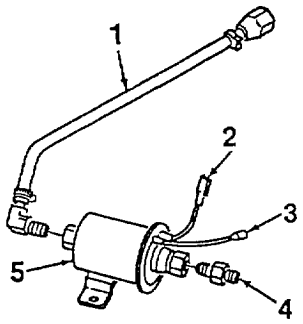

Figure G-15. Fuel Pump Assembly

ITEM NO.	SMR CODE	NSN	CAGEC	PART NUMBER	DESCRIPTION & USABLE ON CODE	QTY
					GROUP 0601 FUEL PUMP ASSEMBLY	
					FIGURE G-15	
1	PAOZZ	62502	96-9166-2		HOSE ASSEMBLY	1
2	PAOZZ	0L4R8	3-520117-2		CONNECTOR, MALE CRIMP	1
3	PAOZZ	0L4R8	3-520107-2		CONNECTOR, FEMALE CRIMP	1
4	PAOZZ	0AKY4	C5205X4		FITTING, 1/8 MPTX#4	1
5	PAOZZ	71425	E1012		PUMP, FUEL	1

END OF FIGURE

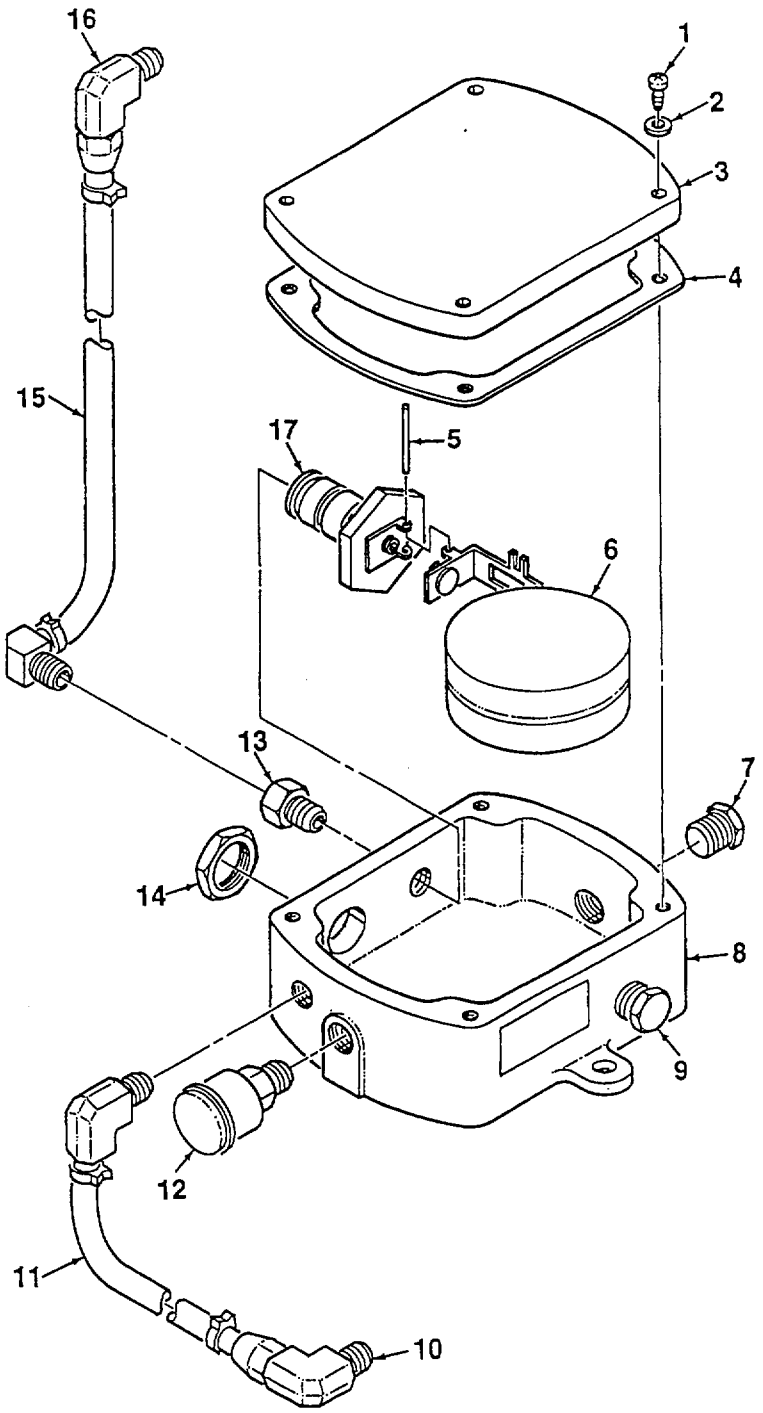

Figure G-16. Float Valve Housing Assembly

ITEM NO.	SMR CODE	NSN	CAGEC	PART NUMBER	DESCRIPTION & USABLE ON CODE	QTY
					GROUP 0602 FLOAT VALVE HOUSING ASSEMBLY	
					FIGURE G-16	
1	PAOZZ	5305-00-406-6695	96906	MS35206-337	SCREW, MACHINE	4
2	PAOZZ	5310-00-045-3296	96906	MS35338-43	WASHER, LOCK	4
3	PAOZZ		62502	96-9179	COVER	1
4	PAOZZ		62502	96-9180	GASKET	1
5	PAOZZ		03479	15050527	PIN	1
6	PAOZZ		03479	15000162	FLOAT	1
7	PAOZZ	4730-00-427-5121	79470	3152X6	PLUG	1
8	PAOZZ		03479	15050525	HOUSING	1
9	PAOZZ	4730-00-014-4027	79470	3152X8	PLUG	1
10	PAOZZ		0AKY4	C5525X5	FITTING, ELBOW	1
11	PAOZZ		62502	96-9166-7	HOSE ASSEMBLY	1
12	XBOZZ		0BT82	1637-025800	VENT, BREATHER	1
13	PAOZZ		0AKY4	32206X6X2	REDUCER, BUSHING	1
14	PAOZZ		03479	15050526	NUT	1
15	PAOZZ		62502	96-9166-4	HOSE ASSEMBLY	1
16	PAOZZ		0AKY4	C5525X4	FITTING, ELBOW	1
17	PAOZZ		03479	15000159	VALVE	1

END OF FIGURE

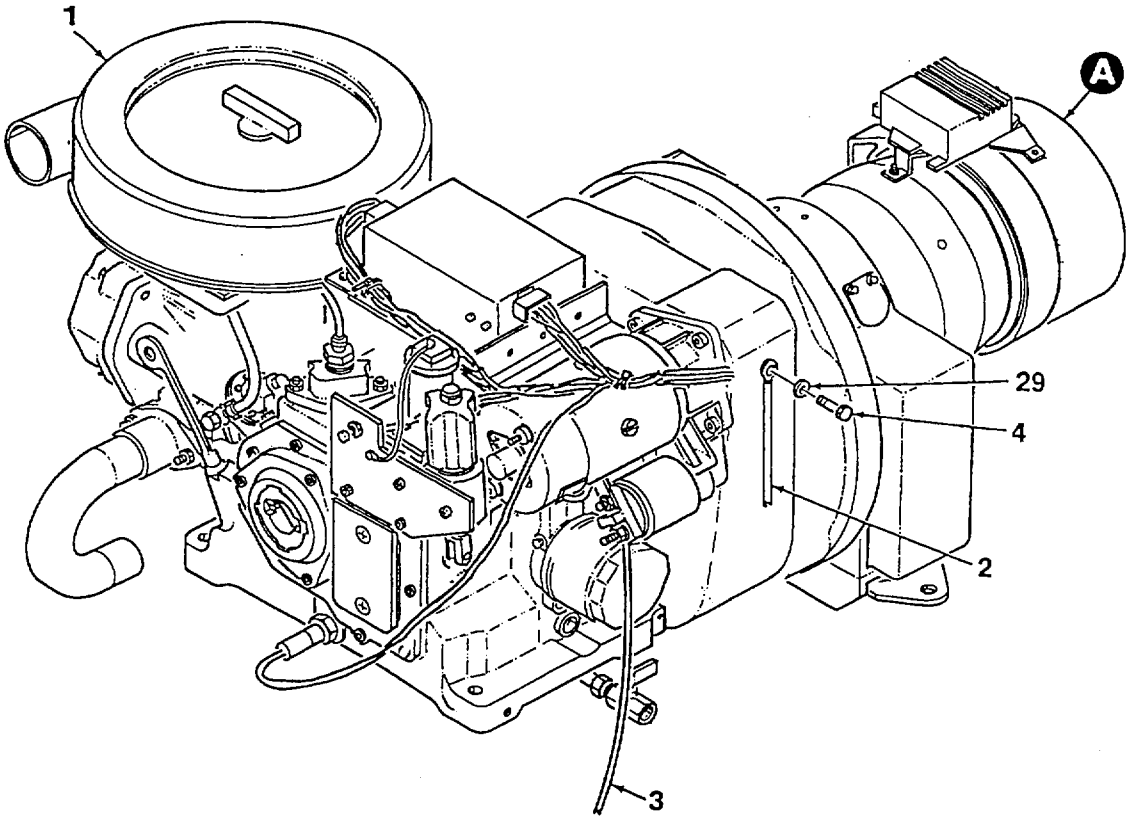

Figure G-17. Engine/Alternator Assembly (Sheet 1 of 2)

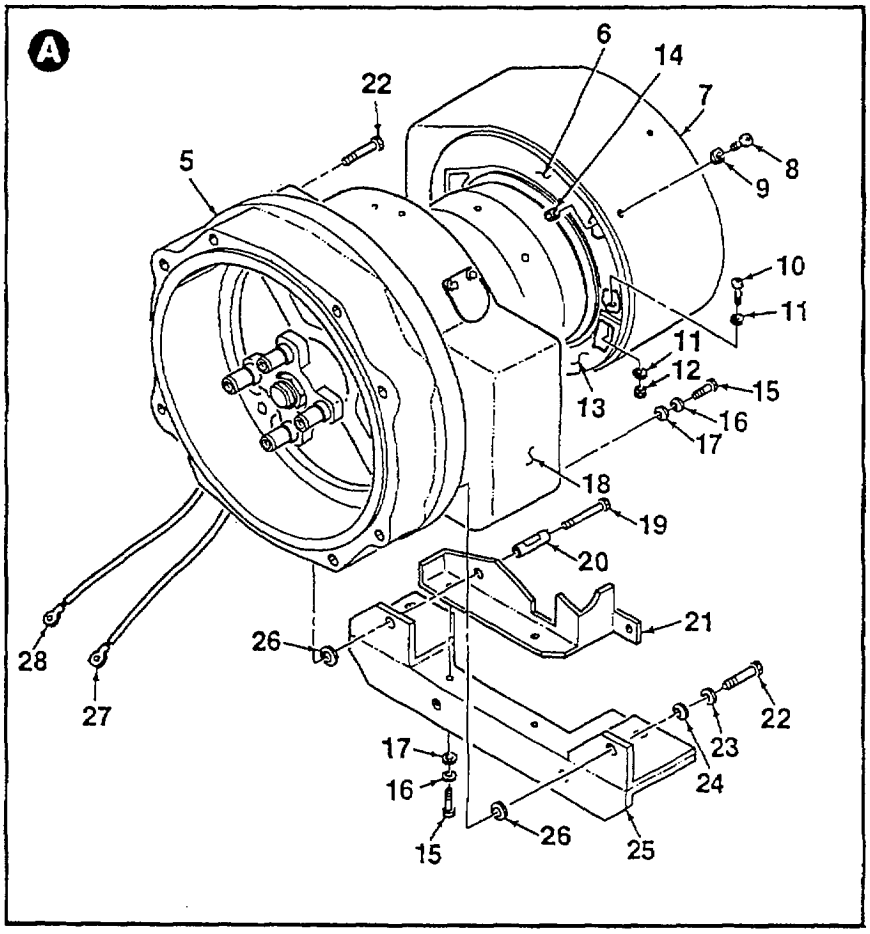

Figure G-17. Engine/Alternator Assembly (Sheet 2 of 2)

ITEM NO.	SMR CODE	NSN	CAGEC	PART NUMBER	DESCRIPTION & USABLE ON CODE	QTY
					GROUP 07 ENGINE/ALTERNATOR ASSEMBLY	
					FIGURE G-17	
1	XBFFF		62502	96-9305	ENGINE ASSEMBLY (SEE FIGURE G-19 FOR PARTS BREAKDOWN)	1
2	PAFFF		62502	96-9253	CABLE ASSEMBLY	1
3	PAFFF		62502	96-9252	CABLE ASSEMBLY	1
4	PAFZZ		0VKD6	96-9429-056	BOLT, HEX HEAD, M8X20	1
5	XBFFF		62502	96-9270	ALTERNATOR ASSEMBLY (SEE FIGURE G-38 FOR PARTS BREAKDOWN)	1
6	XBFZZ		62502	96-9278	MOUNT, CASE	1
7	XBFFF		62502	96-9277	SHROUD ASSEMBLY (SEE FIGURE G-18 FOR PARTS BREAKDOWN)	1
8	PAFZZ		96906	MS35207-265	SCREW	2
9	PAFZZ	5310-00-167-0818	88044	AN960-10	WASHER, FLAT	4
10	PAFZZ		96906	MS16997-64	SCREW	2
11	PAFZZ	5310-00-619-4848	96906	MS27183-51	WASHER, FLAT	4
12	PAFZZ		96906	MS17829-4C	NUT, SELF-LOCKING, HE	2
13	XBFZZ		62502	96-9279	MOUNT, CASE	1
14	PAFZZ	5310-00-877-5798	96906	MS21044-D3	NUT, SELF-LOCKING, HE	2
15	PAFZZ	5305-00-993-1848	96906	MS35207-265	SCREW, MACHINE	3
16	PAFZZ	5310-00-045-3296	96906	MS35338-43	WASHER, LOCK	3
17	PAFZZ	5310-00-167-0818	88044	AN960-10	WASHER, FLAT	3
18	XBFZZ		62502	96-9285	SHROUD ASSEMBLY, FLYWHEEL	1
19	PAFZZ		62502	96-9249-105-SH	SCREW	1
20	PAFZZ		62502	96-9268	SPACER	1
21	XBFZZ		62502	96-9266	COVER	1
22	PAFZZ		0VKD6	96-9249-138	BOLT, HEX HEAD, M10X110	7
23	PAFZZ		0VKD6	96-9247-6	WASHER, LOCK, M10	4
24	PAFZZ		0VKD6	96-9248-6	WASHER, FLAT, M10	4
25	XBFZZ		62502	96-9267	BRACKET	1
26	PAFZZ		86928	570-140-120N	WASHER, FLAT	4
27	PAFZZ		62502	96-9158-4	CABLE ASSEMBLY	1
28	PAFZZ		62502	96-9158-3	CABLE ASSEMBLY	1
29	PAFZZ		0VKD6	96-9248-4	WASHER, FLAT, M8	1

END OF FIGURE

This Page
Intentionally Left Blank

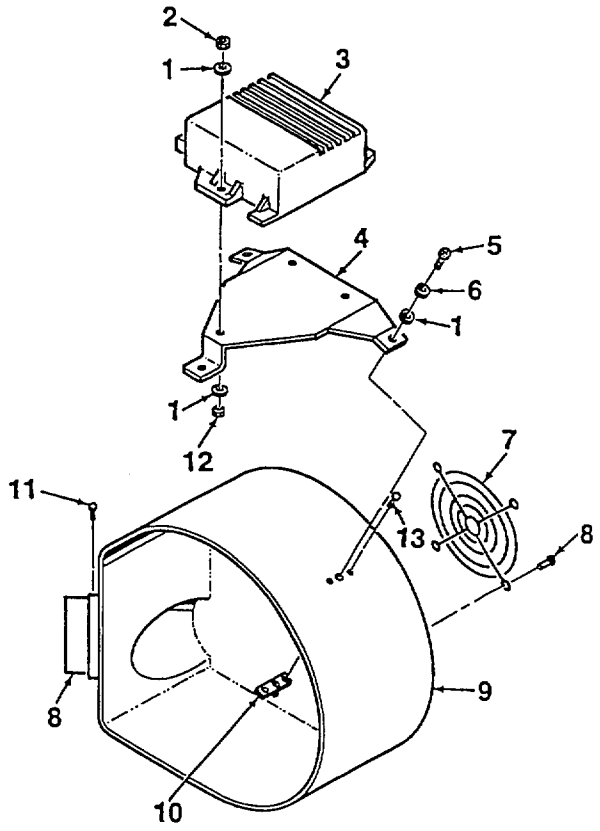

Figure G-18. Shroud Assembly

ITEM NO.	SMR CODE	NSN	CAGEC	PART NUMBER	DESCRIPTION & USABLE ON CODE	QTY
					GROUP 0701 SHROUD ASSEMBLY	
					FIGURE G-18	
1	PAFZZ	5310-00-167-0818	88044	AN960-10	WASHER, FLAT	8
2	PAFZZ	5305-00-993-1848	96906	MS35207-265	SCREW, MACHINE	3
3	PAFZZ		76761	N3129	REGULATOR, VOLTAGE	1
4	XBFZZ		62502	96-9275	BRACKET	1
5	PAFZZ	5305-00-989-7434	96906	MS35207-263	SCREW, MACHINE	2
6	PAFZZ	5310-00-045-3296	96906	MS35338-43	WASHER, LOCK	2
7	XBFZZ		62502	96-9282	GUARD, FINGER	1
8	XBFZZ		07851	AD44AH	RIVET	4
9	XBFZZ		62502	96-9284	SHROUD	1
10	XBFZZ		96906	MS521059-3	PLATE, NUT	2
11	XBFZZ		62502	96-9283	DIVIDER, AIR FLOW	1
12	PAFZZ	5310-00-877-5798	96906	MS21044-D3	NUT, SELF-LOCKING, HE	3
13	XBFZZ		07851	GAMD34A	RIVET	4

END OF FIGURE

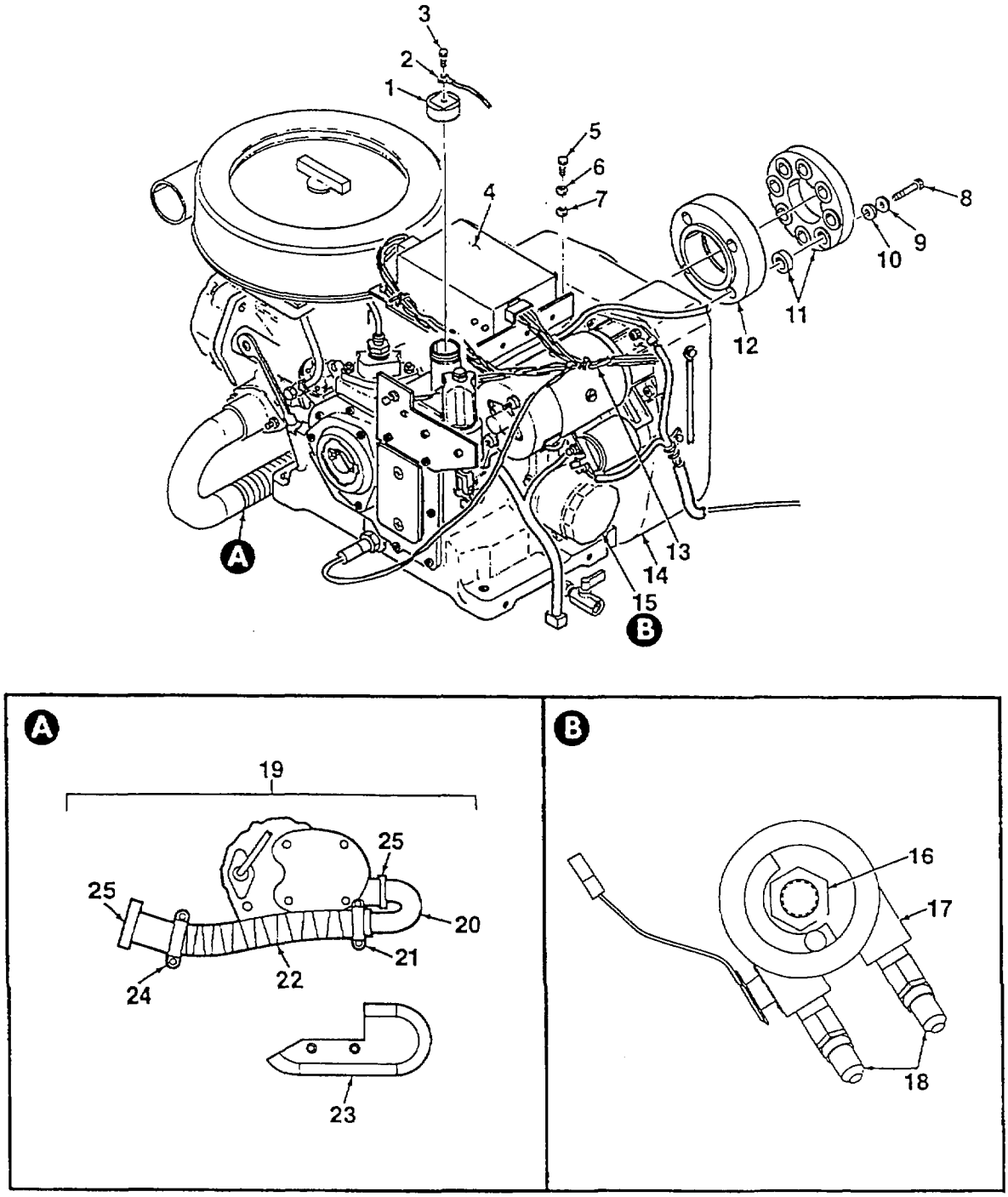

Figure G-19. Engine Assembly Components

ITEM NO.	SMR CODE	NSN	CAGEC	PART NUMBER	DESCRIPTION & USABLE ON CODE	QTY
					GROUP 0702 ENGINE ASSEMBLY	
					FIGURE G-19	
1	XBOZZ		62502	96-9344	CAP	1
2	XBOZZ		62502	96-9345	CABLE, LANYARD	1
3	PAOZZ		88044	AN530-2-4	SCREW, MACHINE	1
4	PAOZZ		62502	96-9355	MODULE ASSEMBLY	1
5	PAOZZ		0VKD6	96-9249-084-HH	BOLT, HEX HEAD, M10X2 0X15	4
6	PAOZZ		0VKD6	96-9247-5	WASHER, LOCK	4
7	PAOZZ		0VKD6	96-9248-5	WASHER, FLAT, M10	4
8	PAFZZ		0VKD6	96-9249-092-HH	BOLT, HEX HEAD	4
9	PAFZZ		0VKD6	96-9247-5	WASHER, LOCK	4
10	PAFZZ		0VKD6	96-9248-5	WASHER, FLAT, M10	4
11	PAFZZ		D8889	856.002.4	INSULATOR, COUPLING	1
12	XBFZZ		D8889	440.064.4	SPACER, COUPLING	1
13	PAOZZ		62502	96-9251	CABLE ASSEMBLY	1
14	XBFFF		D8889	43F	ENGINE	1
15	PAOZZ		D8889	541.050.2E	FILTER, OIL	1
16	PAOZZ		06YT7	181SN	NUT, SLEEVE	1
17	XBOZZ		62502	96-9352	ADAPTER, FILTER, OIL	1
18	PAOZZ		0AKY4	C5355X6X6	ELBOW	2
19	XBOOO		62502	96-9325	EXHAUST ASSEMBLY	1
20	PAOZZ		62502	96-9326	PIPE ASSEMBLY	1
21	PAOZZ		C4519	191253139H	CLAMP	1
22	PAOZZ		62502	96-9330	HOSE	1
23	PAOZZ		0FDK1	913-1763	COVER	1
24	PAOZZ		12088	PC501B	CLAMP	1
25	PAOZZ		62502	96-9327	PIPE ASSEMBLY	1

END OF FIGURE

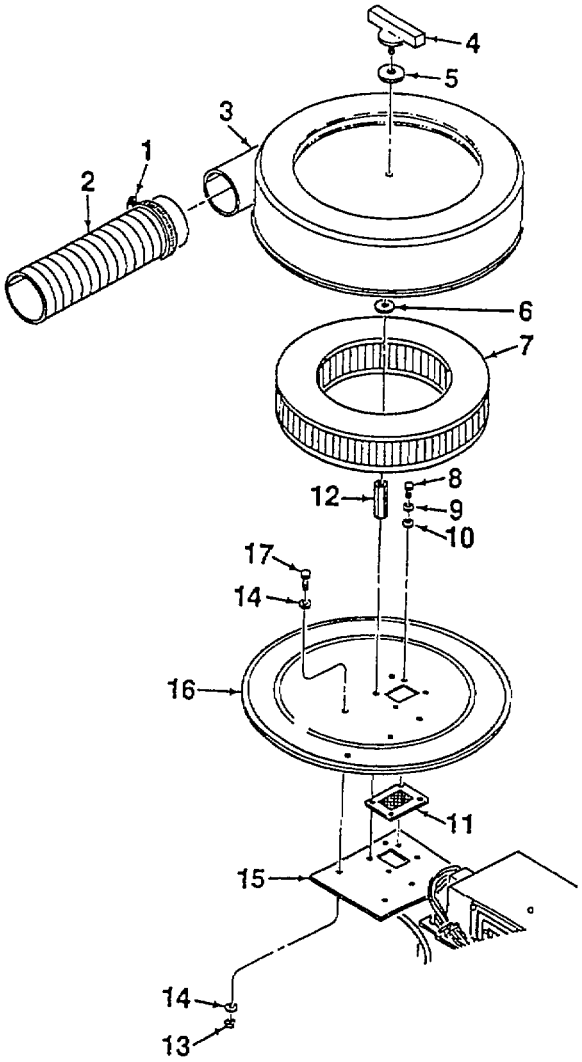

Figure G-20. Engine Air Filter

ITEM NO.	SMR CODE	NSN	CAGEC	PART NUMBER	DESCRIPTION & USABLE ON CODE	QTY
					GROUP 0702 ENGINE ASSEMBLY	
					FIGURE G-20	
1	PAOZZ		96906	MS35842-12	CLAMP, HOSE	1
2	PAOZZ		62502	96-9317	HOSE	1
3	XBOZZ		62502	96-9310	COVER	1
4	PAOZZ		62502	96-9309	SCREW ASSEMBLY	1
5	PAOZZ		86928	5613-49-062	WASHER, NEOPRENE	1
6	PAOZZ		6E876	94800A740	RETAINER	1
7	PAOZZ		4Z382	CA6306	FILTER	1
8	PAOZZ		0VKD6	96-9429-058-HH	BOLT, HEX HEAD, M8X30	3
9	PAOZZ		0VKD6	96-9247-4	WASHER, LOCK, M8	3
10	PAOZZ		0VKD6	96-9248-4	WASHER, FLAT, M8	3
11	PAOZZ		62502	96-9314	GUARD, INTAKE, MESH	1
12	PAOZZ		62502	96-9312	SCREW, JACK, HEX	1
13	PAOZZ		96906	MS17829-4C	NUT, SELF-LOCKING, HE	3
14	PAOZZ	5310-01-398-0341	80205	NAS1149G0432P	WASHER, FLAT	6
15	XBOZZ		62502	96-9316	PLATE	1
16	XBOZZ		62502	96-9315	BASE	1
17	PAOZZ	5305-00-225-3839	96906	MS90725-8	SCREW, CAP, HEXAGON, H	3

END OF FIGURE

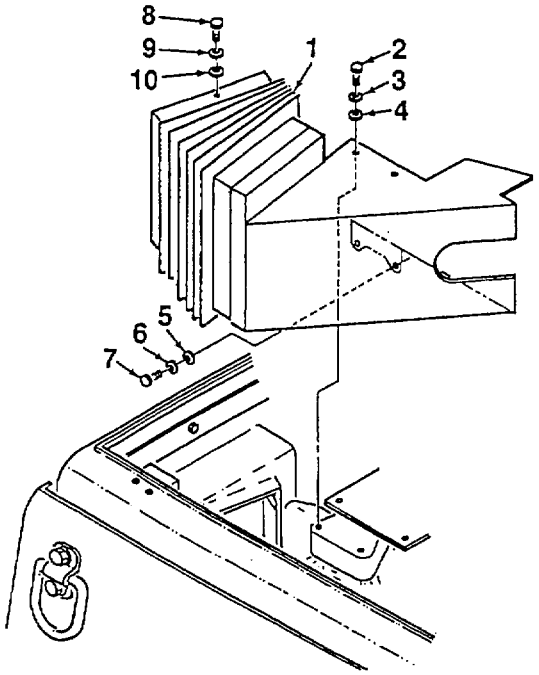

Figure G-21. Exhaust Duct Assembly

ITEM NO.	SMR CODE	NSN	CAGEC	PART NUMBER	DESCRIPTION & USABLE ON CODE	QTY
					GROUP 0702 ENGINE ASSEMBLY	
					FIGURE G-21	
1	PAOZZ		62502	96-9340	DUCT ASSEMBLY	1
2	PAOZZ		0VKD6	96-9249-084-HH	BOLT, HEX HEAD, M10X20X15	2
3	PAOZZ		0VKD6	96-9247-5	WASHER, LOCK	2
4	PAOZZ		0VKD6	96-9248-5	WASHER, FLAT, M10	2
5	PAOZZ		0VKD6	96-9248-3	WASHER, FLAT, M6	2
6	PAOZZ		0VKD6	96-9247-3	WASHER, LOCK, M6	2
7	PAOZZ		0VKD6	96-9249-029-SH	BOLT, M6X20MM, SHCS	2
8	PAOZZ		96906	MS35207-267	SCREW	1
9	PAOZZ		88044	AN960-10	WASHER, FLAT	1
10	PAOZZ		96906	MS35338-43	WASHER, LOCK	1

END OF FIGURE

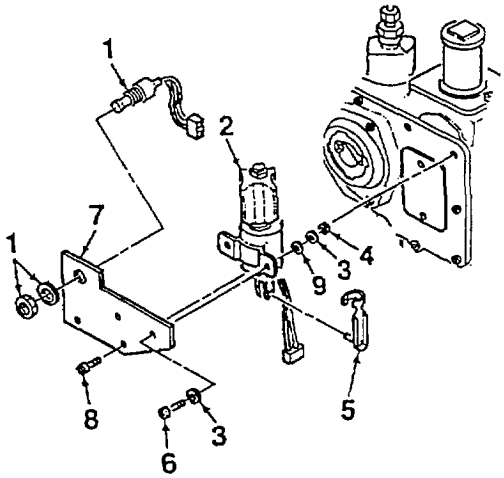

Figure G-22. Engine Start Solenoid

ITEM NO.	SMR CODE	NSN	CAGEC	PART NUMBER	DESCRIPTION & USABLE ON CODE	QTY
					GROUP 0702 ENGINE ASSEMBLY	
					FIGURE G-22	
1	PAOZZ	5930-00-729-8108	81640	W1016	SWITCH	1
2	PAOZZ		D8889	547.407.1	SOLENOID	1
3	PAOZZ		D8889	890.08.02	WASHER, FLAT	4
4	PAOZZ		D8889	890.38.03	NUT, HEX, M6	2
5	PAOZZ		D8889	555.164.2	CLIP, YOKE	1
6	PAOZZ		D8889	890.37.09	SCREW	2
7	XBOZZ		D8889	923.931.4	BRACKET	1
8	PAOZZ		0VKD6	96-9249-056-FH	SCREW	2
9	PAOZZ		D8889	890.10.03	WASHER, LOCK, M6	2

END OF FIGURE

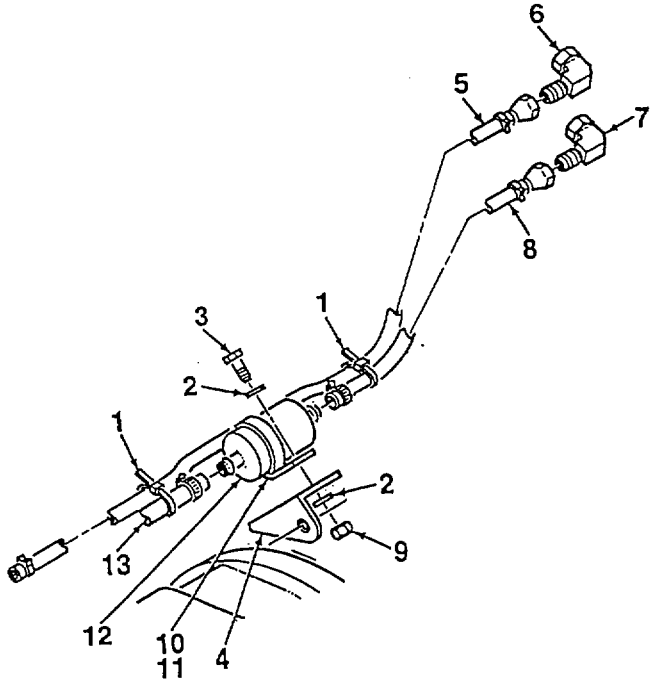

Figure G-23. Fuel Filter (In-Line)

ITEM NO.	SMR CODE	NSN	CAGEC	PART NUMBER	DESCRIPTION & USABLE ON CODE	QTY
					GROUP 0702 ENGINE ASSEMBLY	
					FIGURE G-23	
1	PAOZZ		96906	MS3367-5	WIRE, TIE	2
2	PAOZZ		80205	NAS1149G0632P	WASHER, FLAT	2
3	PAOZZ	5305-00-115-9526	96906	MS90725-58	SCREW, CAP, HEXAGON, H	1
4	XBOZZ		62502	96-9257	BRACKET	1
5	PAOZZ		62502	96-9166-6	HOSE ASSEMBLY, FUEL, RETURN	1
6	PAOZZ		0AKY4	C5506X5	FITTING	1
7	PAOZZ		0AKY4	C5506X4	FITTING	1
8	PAOZZ		62502	96-9166-5	HOSE ASSEMBLY	1
9	PAOZZ		96906	MS17829-6C	NUT, SELF-LOCKING	1
10	XBFZZ		D8889	922.077.2	CLAMP	1
11	XBFZZ		D8889	923.892.4	BRACKET	1
12	PAOZZ		D8889	541.038.2	FILTER, FUEL	1
13	PAFZZ		D8889	971.495.5	PIPE, FUEL	1

END OF FIGURE

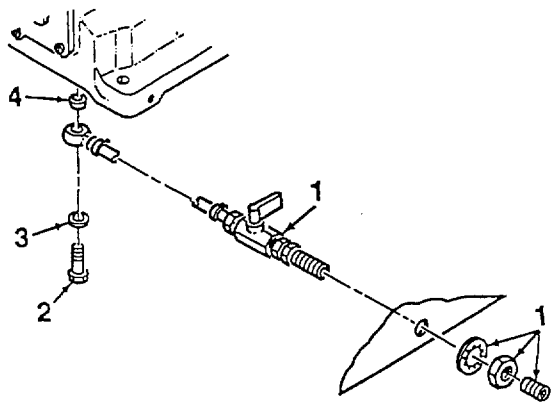

Figure G-24. Oil Drain Assembly

ITEM NO.	SMR CODE	NSN	CAGEC	PART NUMBER	DESCRIPTION & USABLE ON CODE	QTY
					GROUP 0702 ENGINE ASSEMBLY	
					FIGURE G-24	
1	XBOZZ		62502	96-9362	DRAIN ASSEMBLY, OIL	1
2	PAOZZ		62502	96-9366	BOLT, MODIFIED	1
3	PAOZZ		0ELG7	853009-16	SEAL, WASHER	1
4	PAOZZ		62502	96-9364	SPACER	1

END OF FIGURE

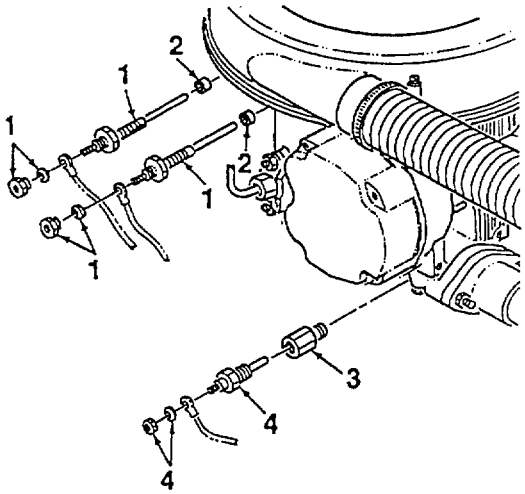

Figure G-25. Air Heat Glow Plug and Temperature Switch

ITEM NO.	SMR CODE	NSN	CAGEC	PART NUMBER	DESCRIPTION & USABLE ON CODE	QTY
					GROUP 070201 DIESEL ENGINE	
					FIGURE G-25	
1	PAOZZ		D8889	555.022.2	PLUG, GLOW	2
2	PAOZZ		D8889	982.334.4	PIPE	2
3	PAOZZ		D8889	515.103.4	ADAPTOR	1
4	PAOZZ		D8889	238.018.2	SWITCH, TEMPERATURE	1

END OF FIGURE

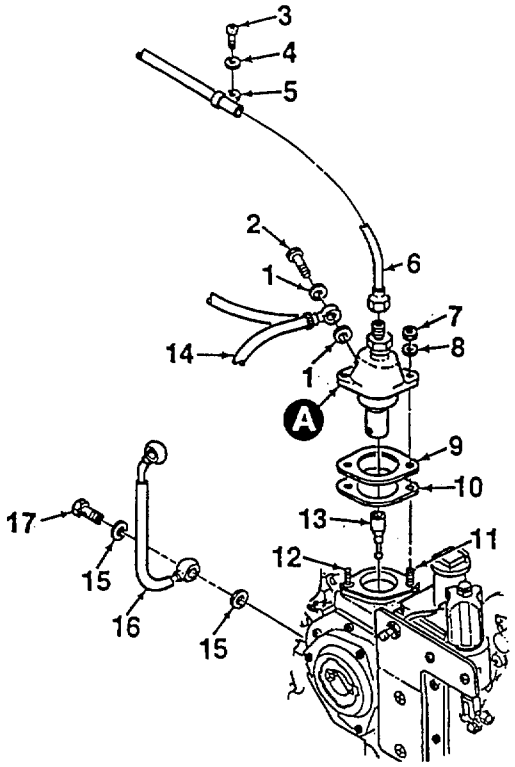

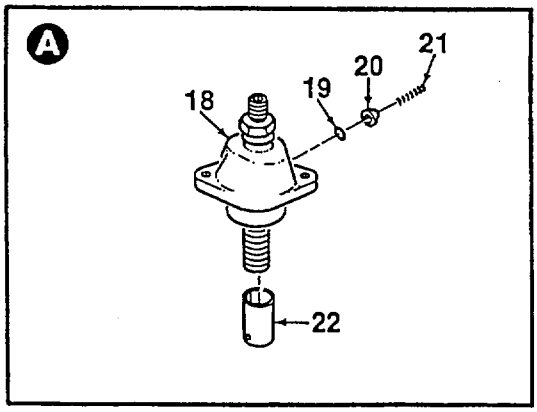

Figure G-26. Fuel Injection Pump

ITEM NO.	SMR CODE	NSN	CAGEC	PART NUMBER	DESCRIPTION & USABLE ON CODE	QTY
					GROUP 070201 DIESEL ENGINE	
					FIGURE G-26	
1	PAOZZ		D8889	890.74.16	WASHER, COPPER, A12X1	2
2	PAOZZ		D8889	890.77.02	BOLT, BANJO, M12X1.5	1
3	PAOZZ		D8889	890.31.28	SCREW, HEX, M6X12	1
4	PAOZZ		D8889	890.11.03	WASHER, SPRING, A6	1
5	PAOZZ		D8889	922.005.4	CLAMP, FUEL LINE	1
6	PAOZZ		D8889	971.481.5	PIPE, FUEL PRESSURE	1
7	PAFZZ		D8889	890.38.05	NUT, HEX, M8	2
8	PAFZZ		D8889	890.74.06	WASHER, COPPER, A8X12	2
9	PAFZZ		D8889	945.009.4	SHIM, 0.2MM, INJECTIO	1
9	PAFZZ		D8889	945.018.4	SHIM, 0.4MM, INJECTIO	1
9	PAFZZ		D8889	945.036.4	SHIM, 1.0MM, INJECTIO	1
10	PAFZZ		D8889	770.201.4	GASKET	1
11	PAFZZ		D8889	890.28.17	STUD, M8X30, INJECTION PUMP	1
12	PAFZZ		D8889	890.28.14	STUD, M8X20, INJECTION PUMP	1
13	PAFZZ		D8889	536.306.2	VALVE, PRESSURE	1
14	PAOZZ		D8889	971.482.5	PIPE, FUEL	1
15	PAFZZ		D8889	890.74.48	WASHER	2
16	PAFZZ		D8889	973.028.5	PIPE, OIL SCAVENGE	1
17	PAFZZ		D8889	890.77.06	BOLT, BANJO, M10X1	1
18	PAFZZ		D8889	536.033.1	PUMP, FUEL INJECTION	1
19	PAFZZ		D8889	536.219.2	SEAL	1
20	PAFZZ		D8889	536.307.2	VALVE, PRESSURE	1
21	PAFZZ		D8889	536.308.2	SPRING	1
22	PAFZZ		D8889	536.305.2	TAPPET, ROLLER	1

END OF FIGURE

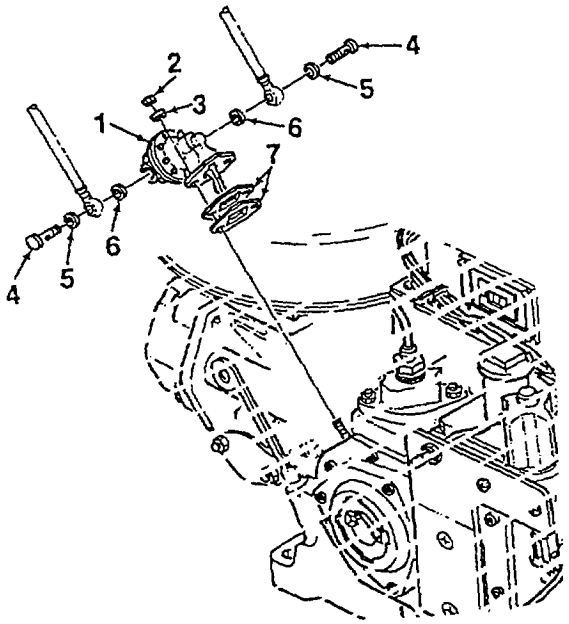

Figure G-27. Fuel Feed Pump

ITEM NO.	SMR CODE	NSN	CAGEC	PART NUMBER	DESCRIPTION & USABLE ON CODE	QTY
					GROUP 070201 DIESEL ENGINE	
					FIGURE G-27	
1	PAOZZ		D8889	175.078.1	PUMP, MECHANICAL FUE	1
2	PAOZZ		D8889	890.38.03	NUT, HEX, 6MM	2
3	PAOZZ		D8889	890.11.03	WASHER, SPRING, A6	2
4	PAOZZ		D8889	515.357.2	BOLT, BANJO, M8	2
5	PAOZZ		D8889	890.74.06	WASHER, COPPER, A8X12	2
6	PAOZZ		D8889	850.067.4	GASKET	2
7	PAOZZ		D8889	847.123.4	GASKET	V

END OF FIGURE

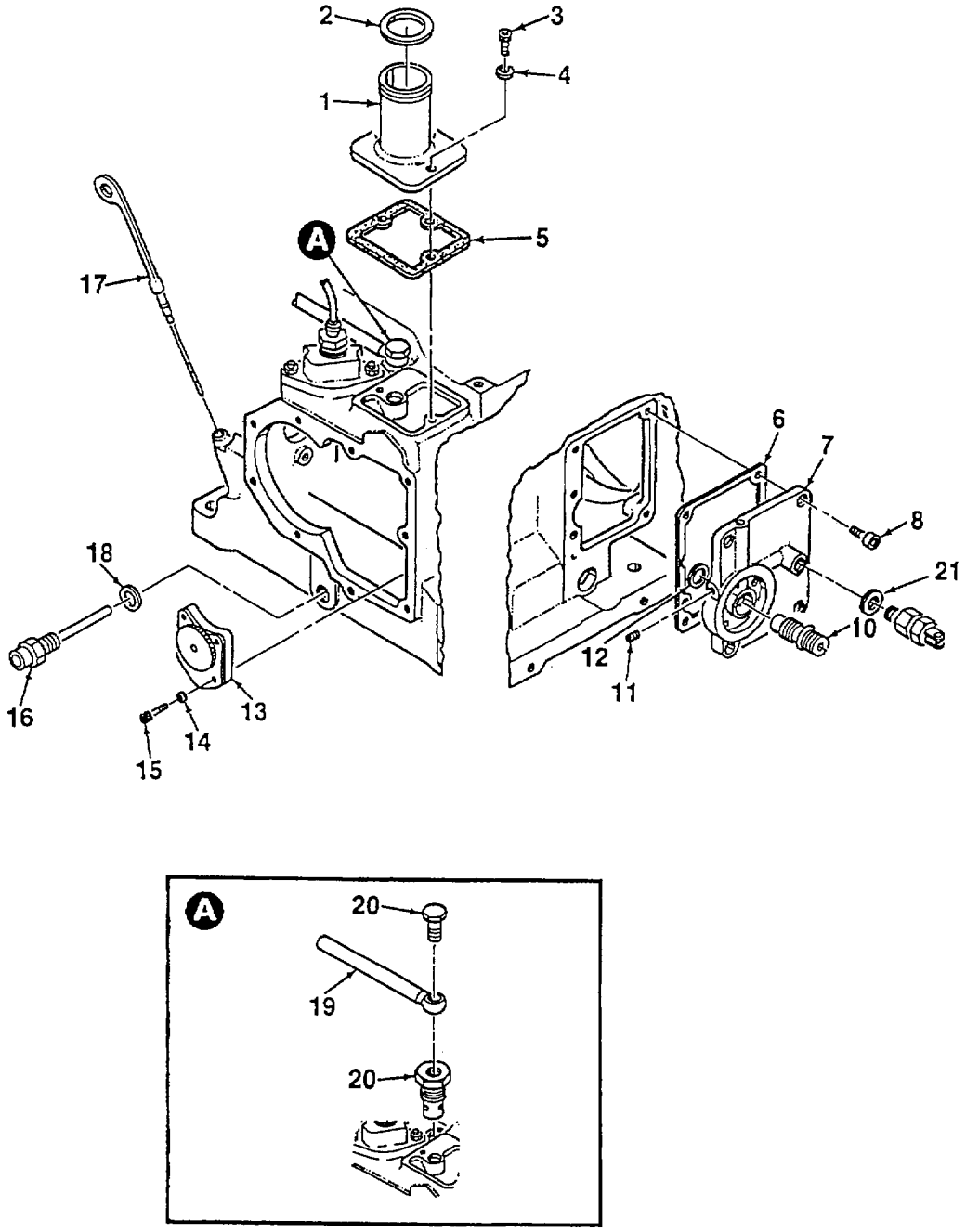

Figure G-28. Engine Oil Components

ITEM NO.	SMR CODE	NSN	CAGEC	PART NUMBER	DESCRIPTION & USABLE ON CODE	QTY
					GROUP 070201 DIESEL ENGINE	
					FIGURE G-28	
1	XBOZZ		D8889	509.040.4	TUBE, FILL	1
2	PAOZZ		D8889	890.066.4	GASKET	1
3	PAOZZ		D8889	890.31.07	SCREW, HEX, M6X25	3
4	PAOZZ		D8889	890.11.03	WASHER, SPRING, A6	3
5	PAOZZ		D8889	770.292.4	GASKET	1
6	PAOZZ		D8889	770.269.4	GASKET	1
7	XBOZZ		D8889	625.187.4	COVER	1
8	PAOZZ		D8889	890.31.08	SCREW, HEX HEAD M8X16	4
9	PAOZZ		D8889	237.013.2	SWITCH, OIL PRESSURE	1
10	PAOZZ		D8889	761.022.6	VALVE, PRESSURE, OIL	1
11	XBOZZ		D8889	890.24.02	PLUG, M8X1	1
12	PAOZZ		D8889	850.185.2	SEAL, O-RING, 6.3X2.4	1
13	PAFZZ		D8889	724.038.7	PUMP, OIL	1
14	PAFZZ		D8889	890.78.02	WASHER, LOCK, M6	4
15	PAFZZ		D8889	890.31.07	SCREW, HEX, M6X25	4
16	PAOZZ		D8889	555.128.2	PLUG, GLOW	1
17	XBOZZ		D8889	762.146.5	DIPSTICK, OIL LEVEL	1
18	PAOZZ		D8889	890.74.17	WASHER, COPPER, 12X18	1
19	PAFZZ		D8889	E860.343.5	TUBE, BREATHER	1
20	PAFZZ		D8889	E761.016.8	KIT, BREATHER	1
21	PAFZZ		D8889	890.74.11	WASHER, COPPER, 10X14	1

END OF FIGURE

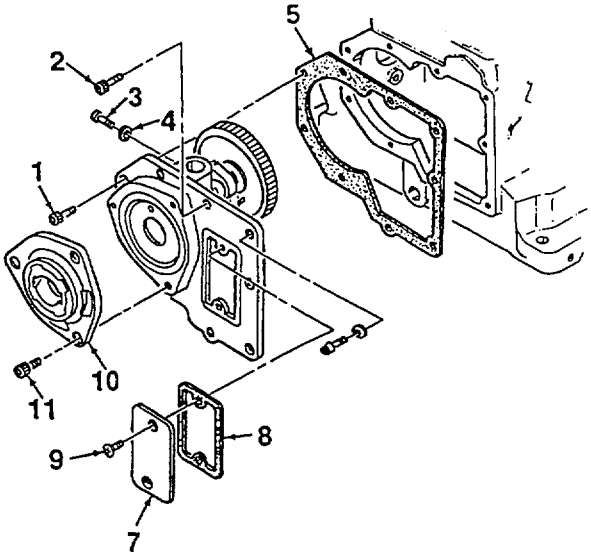

Figure G-29. Camshaft

ITEM NO.	SMR CODE	NSN	CAGEC	PART NUMBER	DESCRIPTION & USABLE ON CODE	QTY
					GROUP 070201 DIESEL ENGINE	
					FIGURE G-29	
1	PAFZZ		D8889	890.31.10	SCREW, HEX, M8X20	8
2	PAFZZ		D8889	890.31.11	SCREW, HEX, M8X25	1
3	PAFZZ		D8889	512.094.4	SCREW, HEX	1
4	PAFZZ		D8889	890.10.03	WASHER, LOCK, A6	1
5	PAFZZ		D8889	770.270.4	GASKET	1
6	PAFZZ		D8889	721.126.7	CAMSHAFT ASSEMBLY	1
7	XBFZZ		D8889	917.287.4	COVER	1
8	PAFZZ		D8889	770.274.4	GASKET	1
9	PAFZZ		D8889	890.95.10	SCREW, SOCKET HEAD	2
10	XBFZZ		D8889	118.127.4	GUIDE, CRANK HANDLE	1
11	PAFZZ		D8889	890.31.08	SCREW, HEX, M8X1	3

END OF FIGURE

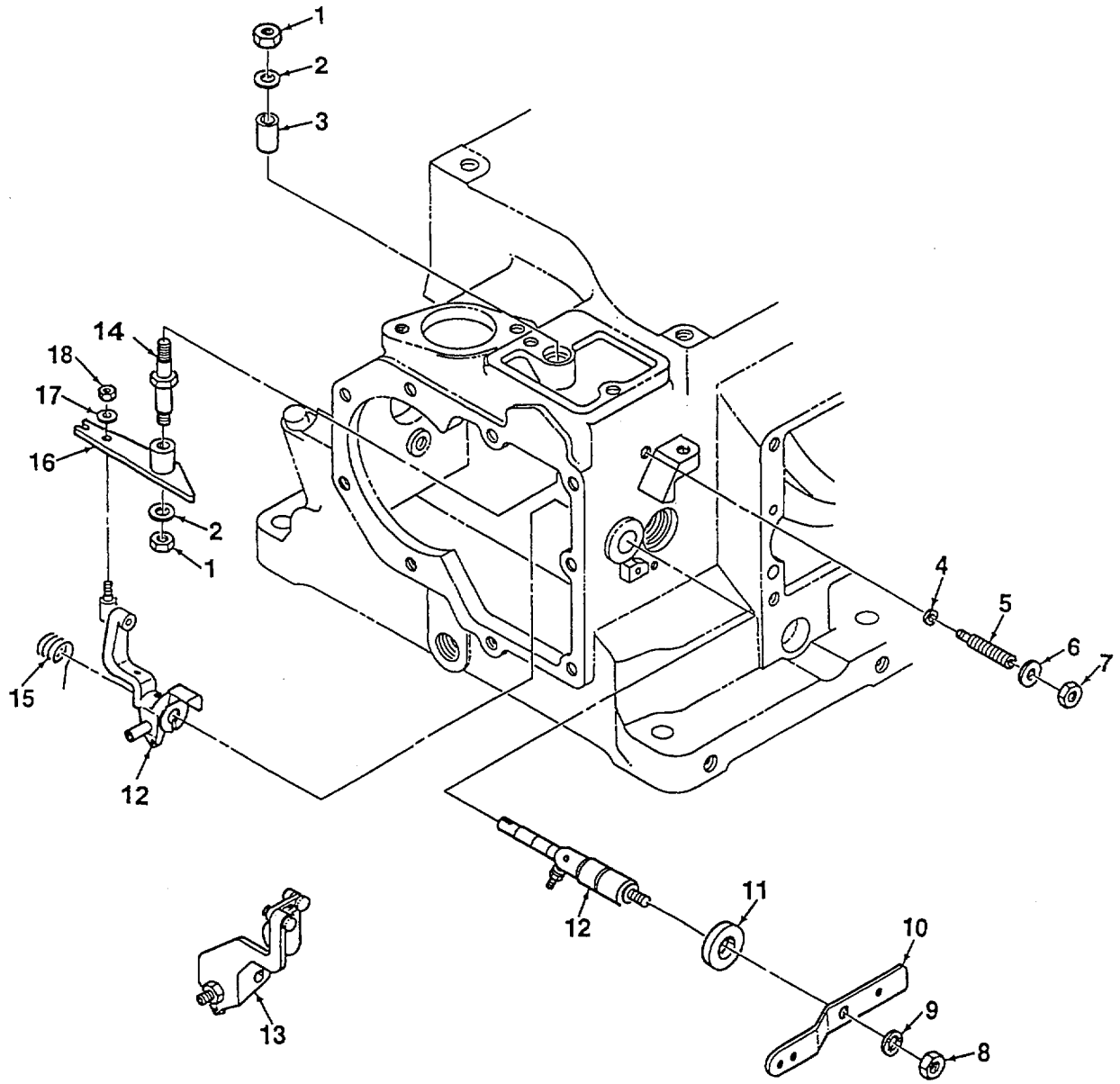

Figure G-30. Engine Speed Controls

ITEM NO.	SMR CODE	NSN	CAGEC	PART NUMBER	DESCRIPTION & USABLE ON CODE	QTY
					GROUP 070201 DIESEL ENGINE	
					FIGURE G-30	
1	PAFZZ		D8889	514.085.2	NUT, HEX, M8	1
2	PAFZZ		D8889	890.02.09	WASHER, 8X14X0.5	1
3	PAFZZ		D8889	465.177.4	BUSHING	1
4	XBFZZ		D8889	890.02.24	WASHER, 5X10X1	1
5	XBFZZ		D8889	508.019.4	PIN, THREADED	1
6	XBFZZ		D8889	890.74.09	WASHER, COPPER, A8X14	1
7	XBFZZ		D8889	514.105.4	NUT, COLLAR	1
8	PAFZZ		D8889	890.38.05	NUT, HEX, M8	1
9	PAFZZ		D8889	890.66.03	WASHER, TOOTH, 18.4	1
10	XBFZZ		D8889	905.211.4	LEVER	1
11	PAFZZ		D8889	521.009.4	RING, SPACER	1
12	XBFZZ		D8889	E722.074.8	SPEED CONTROL	1
13	PAFFF		D8889	714.014.8	PRIMER ASSEMBLY	1
14	PAFZZ		D8889	415.153.4	BOLT, THREADED	1
15	PAFZZ		D8889	807.011.4	SPRING	1
16	PAFZZ		D8889	905.214.5	LEVER	1
17	PAFZZ		D8889	890.08.01	WASHER, 5.3	1
18	PAFZZ		D8889	514.097.2	NUT, HEX	1

END OF FIGURE

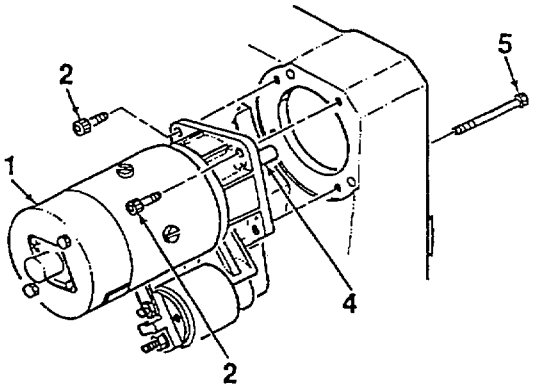

Figure G-31. Starter

ITEM NO.	SMR CODE	NSN	CAGEC	PART NUMBER	DESCRIPTION & USABLE ON CODE	QTY
					GROUP 070201 DIESEL ENGINE	
					FIGURE G-31	
1	PAOZZ		D8889	547.206.1	STARTER	1
2	PAOZZ		D8889	890.31.11	SCREW, HEX, M8X25	4
3	PAOZZ		D8889	890.31.30	SCREW, HEX, M8X80	2
4	PAOZZ		D8889	547.070.2	BUSHING, STARTER	1

END OF FIGURE

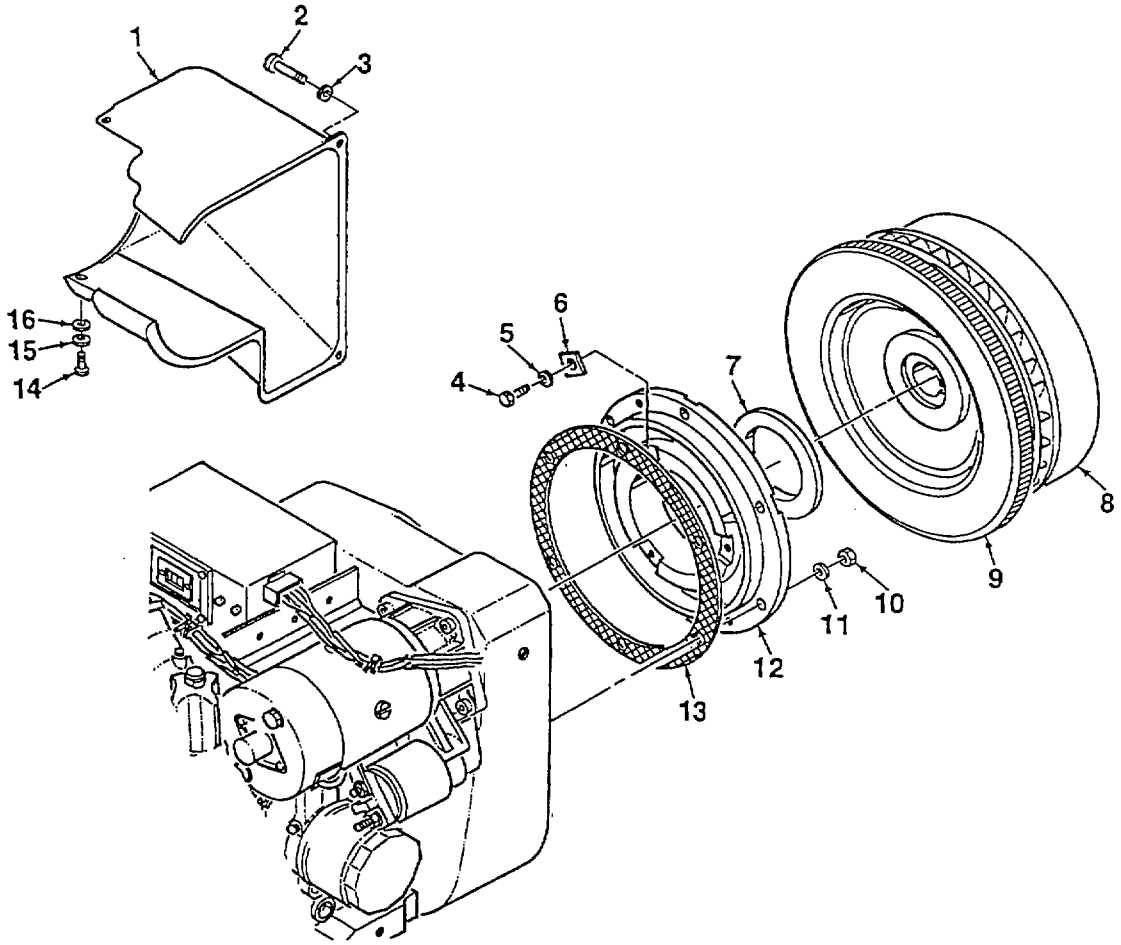

Figure G-32. Flywheel and Ring Gear

ITEM NO.	SMR CODE	NSN	CAGEC	PART NUMBER	DESCRIPTION & USABLE ON CODE	QTY
					GROUP 070201 DIESEL ENGINE	
					FIGURE G-32	
1	XBFZZ		D8889	751.103.4	SHIELD	1
2	PAFZZ		D8889	890.31.28	SCREW, HEX, M6X12	2
3	PAFZZ		D8889	890.08.02	WASHER	4
4	PAFZZ		D8889	890.95.08	SCREW, SOCKET HEAD C	3
5	PAFZZ		D8889	890.66.04	WASHER, TOOTH, V8.4	3
6	PAFZZ		D8889	911.004.4	SEGMENT	3
7	PAFZZ		D8889	890.59.51	SEAL, OIL, 65X100X8	1
8	XBFZZ		D8889	738.293.4	FLYWHEEL	1
9	PAFZZ		D8889	453.002.4	GEAR, RING	1
10	PAFZZ		D8889	890.38.07	NUT, HEX, 10MM	6
11	PAFZZ		D8889	890.10.07	WASHER, LOCK, A10	6
12	XBFZZ		D8889	727.055.4	COVER	1
13	PAFZZ		D8889	770.122.4	GASKET	1
14	PAFZZ		D8889	890.31.28	SCREW, HEX, M6X12	2
15	PAFZZ		D8889	890.08.02	WASHER	4
16	PAFZZ		D8889	522.019.4	WASHER	1

END OF FIGURE

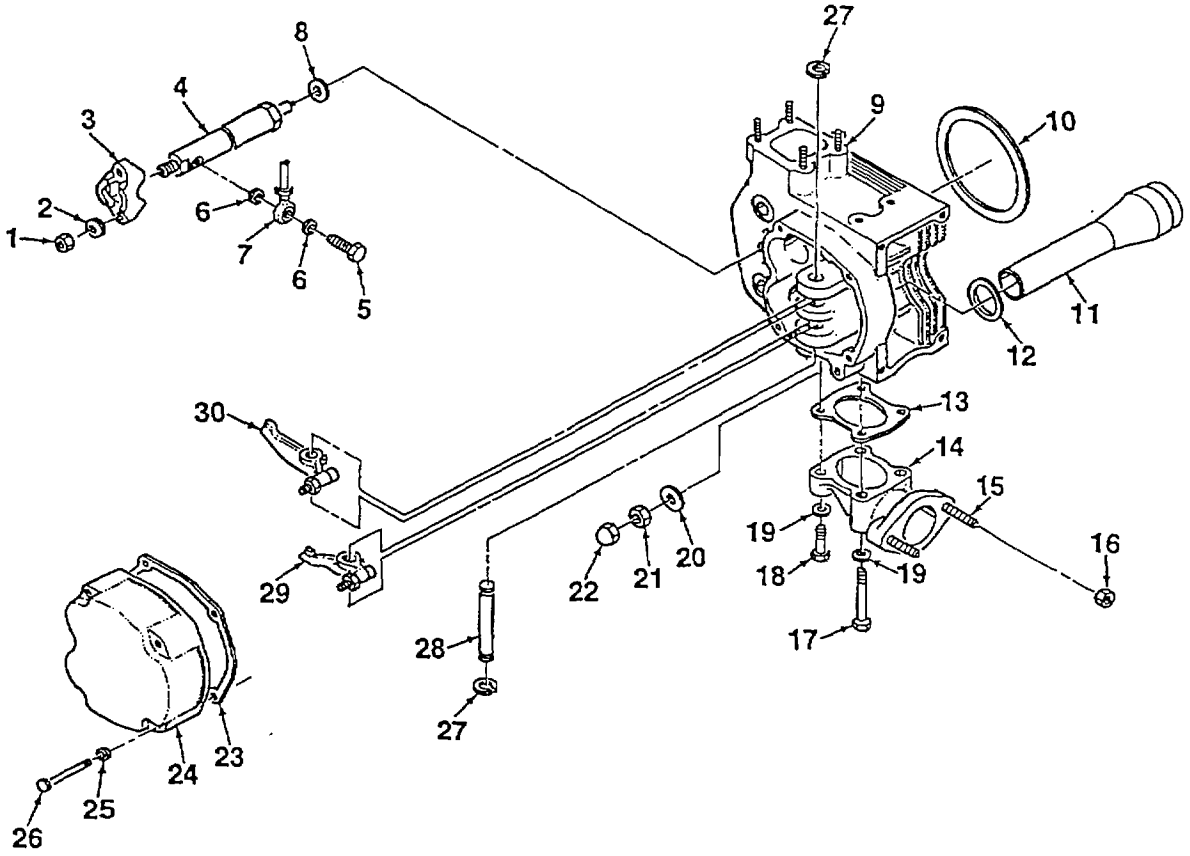

Figure G-33. Rocker Arm and Fuel Injector Assemblies

ITEM NO.	SMR CODE	NSN	CAGEC	PART NUMBER	DESCRIPTION & USABLE ON CODE	QTY
					GROUP 070201 DIESEL ENGINE	
					FIGURE G-33	
1	PAOZZ		D8889	890.38.03	NUT, HEX, 6MM	2
2	PAOZZ		D8889	890.10.03	WASHER, LOCK, A6	2
3	XBOZZ		D8889	928.093.4	FLANGE	1
4	PAOZZ		D8889	537.015.1	INJECTOR, FUEL	1
5	PAOZZ		D8889	515.353.2	BOLT, BANJO, M6	1
6	PAOZZ		D8889	890.74.04	WASHER, COPPER, A6X10	2
7	PAOZZ		D8889	971.486.5	PIPE, FUEL	1
8	PAOZZ		D8889	850.195.4	WASHER	1
9	XBFFF		D8889	731.226.8	CYLINDER HEAD ASSEMBLY (SEE FIGURE G-35 FOR PARTS BREAKDOWN)	1
10	PAFZZ		D8889	771.003.4	GASKET	1
11	PAFZZ		D8889	921.026.4	TUBE, PUSH ROD	1
12	PAFZZ		D8889	850.197.4	SEAL, O-RING, 32X4	1
13	PAFZZ		D8889	770.290.4	GASKET	1
14	XBFZZ		D8889	616.070.4	MANIFOLD, EXHAUST	1
15	XBFZZ		D8889	890.28.32	STUD, M10X25	2
16	PAFZZ		D8889	514.104.2	NUT, HEX, M10	2
17	PAFZZ		D8889.	890.37.26	SCREW, HEX, M8X55	2
18	PAFZZ		D8889	890.37.20	SCREW, HEX, M8X25	2
19	PAFZZ		D8889	890.10.05	WASHER, LOCK, A8	4
20	PAFZZ		D8889	522.022.4	WASHER	2
21	PAFZZ		D8889	890.38.07	NUT, HEX, 10MM	2
22	PAFZZ		D8889	890.54.02	NUT, CAP, HEX, M10	2
23	PAOZZ		D8889	770.288.4	GASKET	1
24	XBOZZ		D8889	651.051.4	CAP, VALVE	1
25	PAOZZ		D8889	890.11.03	WASHER, SPRING, A6	4
26	PAOZZ		D8889	890.36.95	SCREW, HEX, M6X55	4
27	PAFZZ		D8889	890.67.05	WASHER, RETAINING	2
28	PAFZZ		D8889	415.156.4	BOLT, ROCKER	1
29	PAFZZ		D8889	633.053.5	ARM, ROCKER	1
30	PAFZZ		D8889	633.054.5	ARM, ROCKER	1

END OF FIGURE

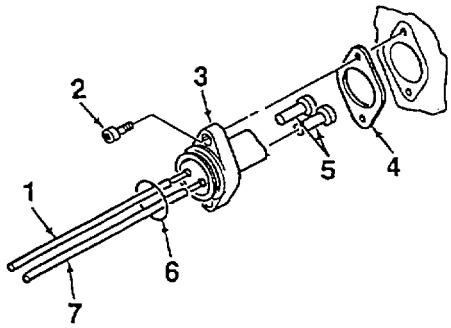

Figure G-34. Push Rods

ITEM NO.	SMR CODE	NSN	CAGEC	PART NUMBER	DESCRIPTION & USABLE ON CODE	QTY
					GROUP 070201 DIESEL ENGINE	
					FIGURE G-34	
1	PAFZZ		D8889	421.069.4	ROD, PUSH, INLET	1
2	PAFZZ		D8889	890.31.10	SCREW, HEX, M8X20	2
3	PAFZZ		D8889	424.021.4	GUIDE, TAPPET	1
4	PAFZZ		D8889	770.277.4	GASKET	1
5	PAFZZ		D8889	423.022.4	TAPPET	2
6	PAFZZ		D8889	850.011.4	SEAL, O-RING, 32X4	1
7	PAFZZ		D8889	421.070.4	ROD, PUSH, OUTLET	1

END OF FIGURE

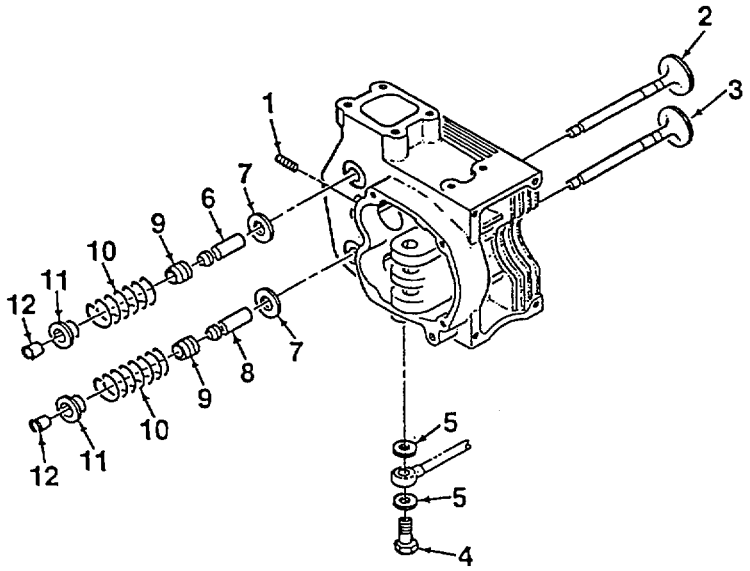

Figure G-35. Cylinder Head Assembly

ITEM NO.	SMR CODE	NSN	CAGEC	PART NUMBER	DESCRIPTION & USABLE ON CODE	QTY
					GROUP 07020101 CYLINDER HEAD ASSEMBLY	
					FIGURE G-35	
1	XBFZZ		D8889	890.28.66	STUD, M6X40	2
2	PAFZZ		D8889	427.043.4	CONE, VALVE, INLET	1
3	PAFZZ		D8889	427.044.4	CONE, VALVE, OUTLET	1
4	PAFZZ		D8889	890.77.06	BOLT, BANJO, M10X1	1
5	PAFZZ		D8889	890.74.78	WASHER	2
6	PAFZZ		D8889	426.032.4	GUIDE, VALVE, OUTLET	1
7	PAFZZ		D8889	927.022.4	WASHER	2
8	PAFZZ		D8889	426.031.4	GUIDE, VALVE, INLET	1
9	PAFZZ		D8889	861.104.2	SEAL	2
10	PAFZZ		D8889	805.092.4	SPRING	2
11	PAFZZ		D8889	531.009.4	PLATE	2
12	PAFZZ		D8889	E527.007.4	COTTER, VALVE	2

END OF FIGURE

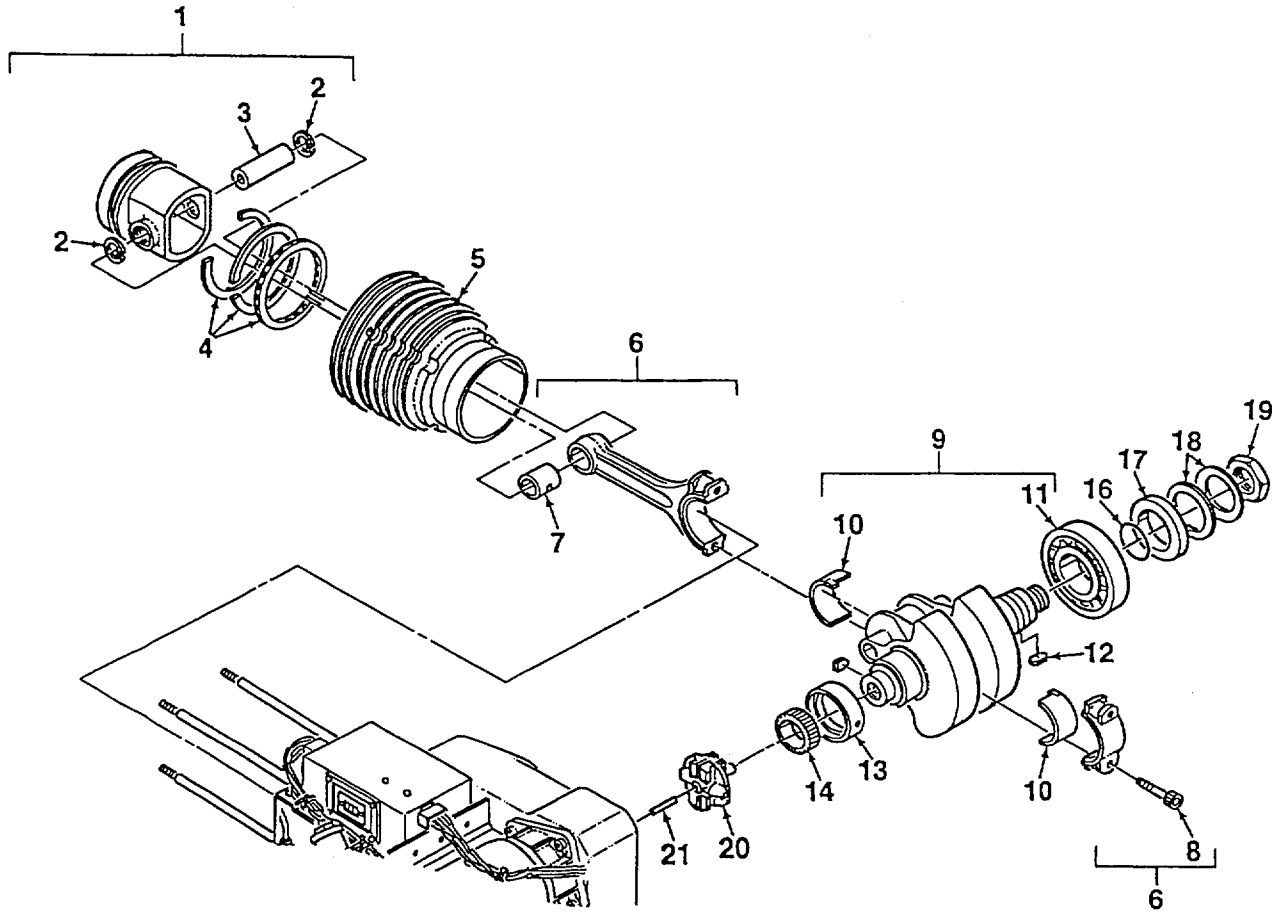

Figure G-36. Piston and Crankshaft

ITEM NO.	SMR CODE	NSN	CAGEC	PART NUMBER	DESCRIPTION & USABLE ON CODE	QTY
					GROUP 070201 DIESEL ENGINE	
					FIGURE G-36	
1	PAFFF		D8889	725.125.8	PISTON ASSEMBLY	1
2	XBFZZ		D8889	890.20.33	RING, RETAINING, 26X1	2
3	XBFZZ		D8889	418.017.4	PIN, PISTON	1
4	PAFZZ		D8889	535.143.1	RING SET, PISTON	1
5	XBFZZ		D8889	730.058.4	CYLINDER	1
6	PAFFF		D8889	726.036.5	CONNECTING ROD	1
7	XBFZZ		D8889	465.169.4	BUSHING	1
8	PAFZZ		D8889	890.31.90	SCREW, HEX, M10X11X45	2
9	PAFFF		D8889	715.093.8	CRANKSHAFT ASSEMBLY	1
10	XBFZZ		D8889	470.022.4	SHELL, BEARING	1
10	XBFZZ		D8889	470.023.4	SHELL, BEARING	1
10	XBFZZ		D8889	470.024.4	SHELL, BEARING	1
11	XBFZZ		D8889	800.017.2	BEARING, ROLLER	1
12	XBFZZ		D8889	890.68.10	KEY, FITTING, A8X5X20	1
13	XBFZZ		D8889	775.038.4	BUSHING, MAIN	1
13	XBFZZ		D8889	775.039.4	BUSHING, MAIN	1
13	XBFZZ		D8889	775.040.4	BUSHING, MAIN	1
14	XBFZZ		D8889	452.134.4	GEAR	1
15	XBFZZ		D8889	907.001.4	KEY, FITTING	1
16	PAFZZ		D8889	850.013.4	SEAL, O-RING, 40X1.5	1
17	PAFZZ		D8889	519.038.4	RING, ANGLE	1
18	PAFZZ		D8889	804.002.4	WASHER, BELLEVILLE	2
19	PAFZZ		D8889	514.001.4	NUT, FLYWHEEL	1
20	PAFZZ		D8889	540.051.1	GOVERNOR, 3000E MIN-1	1
21	PAFZZ		D8889	890.61.05	PIN, GOVERNOR	1

END OF FIGURE

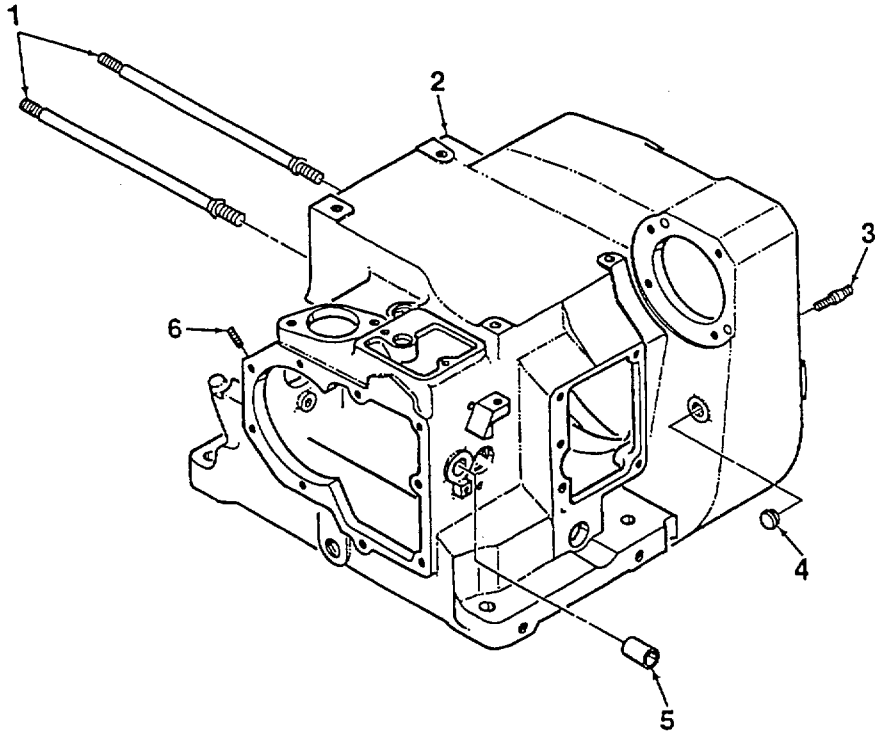

Figure G-37. Crankcase

ITEM NO.	SMR CODE	NSN	CAGEC	PART NUMBER	DESCRIPTION & USABLE ON CODE	QTY
					GROUP 070201 DIESEL ENGINE	
					FIGURE G-37	
1	XBFZZ		D8889	512.006.4	STUD	4
2	XBFFF		D8889	711.612.5	CRANKCASE	1
3	XBFZZ		D8889	512.113.4	STUD	6
4	XBFZZ		D8889	861.096.2	PIPE, SPOUT	1
5	PAFZZ		D8889	4658.006.4	BUSHING	1
6	XBFZZ		D8889	890.28.03	STUD, M6X16	2

END OF FIGURE

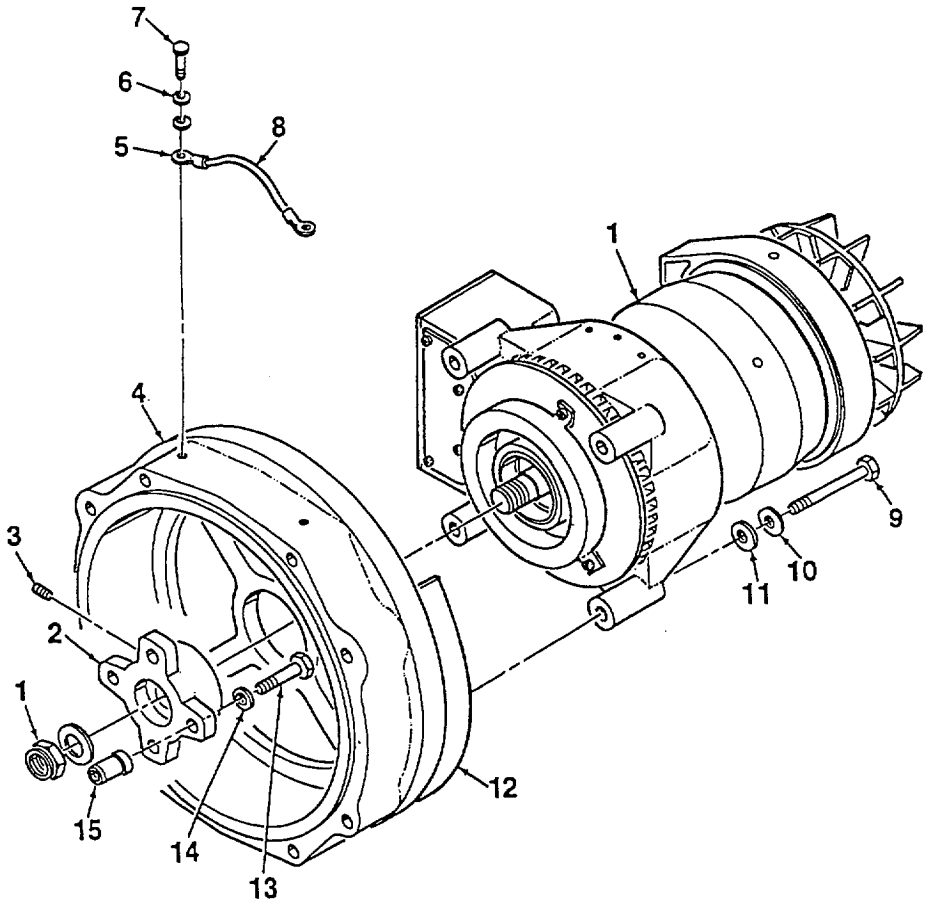

Figure G-38. Alternator Assembly

ITEM NO.	SMR CODE	NSN	CAGEC	PART NUMBER	DESCRIPTION & USABLE ON CODE	QTY
					GROUP 0703 ALTERNATOR ASSEMBLY	
					FIGURE G-38	
1	PAFZZ		76761	N1379	ALTERNATOR	1
2	XBFZZ		62502	96-9292	COUPLING, MODIFIED	1
3	PAFZZ		88044	AN565928-6	SCREW, SET	1
4	XBFZZ		62502	96-9295	HOUSING, FLYWHEEL	1
5	PAFZZ	5310-00-641-9464	96906	MS27183-13	WASHER, FLAT	2
6	PAFZZ	5310-00-637-9541	96906	MS35338-46	WASHER, LOCK	2
7	PAFZZ	5305-00-115-9526	96906	MS90725-58	SCREW, CAP, HEXAGON, H	2
8	XBFZZ		62502	96-9307	SLING	1
9	PAFZZ	5305-00-071-2072	80204	MS90725-116	SCREW, CAP, HEXAGON, H	4
10	PAFZZ	5310-00-584-5272	96906	MS35338-48	WASHER, LOCK	4
11	PAFZZ	5310-00-809-5997	96906	MS27183-17	WASHER, FLAT	4
12	PAFZZ		62502	96-9293	SEAL	1
13	PAFZZ		0VKD6	96-9249-090-HH	BOLT, HEX HD, M10X35	4
14	PAFZZ		0VKD6	96-9247-5	WASHER, LOCK	4
15	PAFZZ		D8889	415.079.4	LUG, DRIVE	4

END OF FIGURE

PART NUMBER INDEX

FSCM	PART NUMBER	STOCK NUMBER	FIGURE NO	ITEM NO
07851	AD44AH		18	8
88044	AN530-2-4		19	3
88044	AN565-1032-6		6	10
88044	AN565-1032-6		6	46
88044	AN565-416-20		6	12
88044	AN565-416-20		6	44
88044	AN565928-6		38	3
88044	AN960-10	5310-00-167-0818	3	2
88044	AN960-10	5310-00-167-0818	4	8
88044	AN960-10	5310-00-167-0818	4	11
88044	AN960-10	5310-00-167-0818	8	3
88044	AN960-10	5310-00-167-0818	9	4
88044	AN960-10	5310-00-167-0818	11	2
88044	AN960-10	5310-00-167-0818	17	9
88044	AN960-10	5310-00-167-0818	17	17
88044	AN960-10	5310-00-167-0818	18	1
88044	AN970-4	5310-00-167-0766	12	5
88044	AN970-4	5310-00-167-0766	14	11
9X737	B40R		6	19
4Z382	CA6306		20	7
0AKY4	C5205X4		15	4
79470	C5405X4X4	4730-00-277-2448	13	25
0AKY4	C5405X5		16	14
96906	C5405X5X4	4730-01-096-3170	13	33
0AKY4	C5506X4		23	7
0AKY4	C5506X5		23	6
0AKY4	C5525X4		16	19
0AKY4	C5525X5		16	18
71425	E1012		15	5
D8889	E108.078.8		32	12
05VU8	E22B1		12	12
05VU8	E22GDB2		12	11
D8889	E527.007.2		35	12
D8889	E761.016.8		28	20
D8889	E860.343.5		28	19
50184	ICS10412X-12RB9C		10	9
	AMXS-S-0210			
96906	MS16997-153	5305-00-983-7470	7	17
96906	MS16997-60	5305-00-068-0502	10	5
96906	MS16997-63	5305-00-978-9381	7	25
96906	MS16997-64		17	10
96906	MS16997-82		3	9
96906	MS16997-84		6	20
96906	MS17829-4C		6	22

FSCM	PART NUMBER	STOCK NUMBER	FIGURE NO	ITEM NO
96906	MS17829-4C		7	27
96906	MS17829-4C		12	6
96906	MS17829-4C		13	31
96906	MS17829-4C		14	1
96906	MS17829-4C		17	12
96906	MS17829-4C		20	13
96906	MS17829-6C		2	3
96906	MS17829-6C		5	10
96906	MS17829-6C		6	25
96906	MS17829-6C		7	21
96906	MS17829-6C		8	10
96906	MS17829-6C		23	9
96906	MS17829-8C		2	10
96906	MS21004-N08		11	12
96906	MS21004-N08		11	19
96906	MS21004-N08		12	1
96906	MS21044-D3	5310-00-877-5798	3	15
96906	MS21044-D3	5310-00-877-5798	4	7
96906	MS21044-D3	5310-00-877-5798	8	4
96906	MS21044-D3	5310-00-877-5798	9	5
96906	MS21044-D3	5310-00-877-5798	11	25
96906	MS21044-D3	5310-00-877-5798	17	14
96906	MS21044-D3	5310-00-877-5798	18	8
96906	MS21044-N06		13	14
96906	MS21044-N3		13	23
96906	MS21045-4S		22	2
96906	MS21919-12		4	9
96906	MS24532-2		12	27
96906	MS27183-11	5310-00-809-3078	4	21
96906	MS27183-11	5310-00-809-3078	9	14
96906	MS27183-13	5310-00-641-9464	2	4
96906	MS27183-13	5310-00-641-9464	3	11
96906	MS27183-13	5310-00-641-9464	4	17
96906	MS27183-13	5310-00-641-9464	5	7
96906	MS27183-13	5310-00-641-9464	6	26
96906	MS27183-13	5310-00-641-9464	6	30
96906	MS27183-13	5310-00-641-9464	7	7
96906	MS27183-13	5310-00-641-9464	9	9
96906	MS27183-13	5310-00-641-9464	38	5
96906	MS27183-17	5310-00-809-5997	1	13
96906	MS27183-17	5310-00-809-5997	2	2
96906	MS27183-17	5310-00-809-5997	38	11
96906	MS27183-51	5310-00-619-4848	2	7
96906	MS27183-51	5310-00-619-4848	7	28
96906	MS27183-51	5310-00-619-4848	10	4
96906	MS27183-51	5310-00-619-4848	17	11
96906	MS27189-4C		2	8
96906	MS3367-5		23	1
96906	MS34338-43		11	3

FSCM	PART NUMBER	STOCK NUMBER	FIGURE NO	ITEM NO
96906	MS35190-273	5305-00-958-5471	3	13
96906	MS35190-292	5305-00-990-1347	2	6
96906	MS35190-319		8	5
96906	MS35190-322		8	12
96906	MS35191-270	5305-00-984-7361	13	3
96906	MS35191-276	5305-00-989-7343	4	10
96906	MS35191-303		6	8
96906	MS35191-303		6	41
96906	MS35206-226	5305-00-984-4983	1 I	17
96906	MS35206-226	5305-00-984-4983	12	25
96906	MS35206-232	5305-00-984-4992	11	11
96906	MS35206-232	5305-00-984-4992	12	20
96906	MS35206-247		13	17
96906	MS35206-283	5305-00-988-1727	6	3
96906	MS35206-283	5305-00-988-1727	6	36
96906	MS35206-337	5305-00-406-6695	16	1
96906	MS35207-263	5305-00-989-7434	7	10
96906	MS35207-263	5305-00-989-7434	9	7
96906	MS35207-263	5305-00-989-7434	13	5
96906	MS35207-263	5305-00-989-7434	18	5
96906	MS35207-265	5305-00-993-1848	7	3
96906	MS35207-265	5305-00-993-1848	8	16
96906	MS35207-265	5305-00-993-1848	9	18
96906	MS35207-265	5305-00-993-1848	11	1
96906	MS35207-265	5305-00-993-1848	12	18
96906	MS35207-265	5305-00-993-1848	13	18
96906	MS35207-265	5305-00-993-1848	17	15
96906	MS35207-265	5305-00-993-1848	18	2
96906	MS35207-267	5305-00-993-1851	4	13
96906	MS35207-267	5305-00-993-1851	7	19
96906	MS35207-267	5305-00-993-1851	8	2
96906	MS35307-413		1	11
96906	MS35335-36		13	11
96906	MS35335-37		13	13
96906	MS35337-46	5310-00-616-2200	3	12
96906	MS35337-46	5310-00-616-2200	4	16
96906	MS35338-43	5310-00-045-3296	4	12
96906	MS35338-43	5310-00-045-3296	7	11
96906	MS35338-43	5310-00-045-3296	9	8
96906	MS35338-43	5310-00-045-3296	13	4
96906	MS35338-43	5310-00-045-3296	16	2
96906	MS35338-43	5310-00-045-3296	17	16
96906	MS35338-43	5310-00-045-3296	18	6
96906	MS35338-44	5310-00-582-5965	4	20
96906	MS35338-44	5310-00-582-5965	8	14
96906	MS35338-45	5310-00-407-9566	3	8
96906	MS35338-45	5310-00-407-9566	4	20
96906	MS35338-45	5310-00-407-9566	9	15
96906	MS35338-46	5310-00-637-9541	6	29
96906	MS35338-46	5310-00-637-9541	9	10
96906	MS35338-46	5310-00-637-9541	38	6

FSCM	PART NUMBER	STOCK NUMBER	FIGURE NO	ITEM NO
96906	MS35338-48	5310-00-584-5272	1	12
96906	MS35338-48	5310-00-584-5272	38	10
96906	MS35691-29		13	10
96906	MS35691-37		13	12
96906	MS35842-12		20	1
96906	MS35842-14		3	4
96906	MS35842-14		3	7
96906	MS51859-17	5310-00-809-5997	6	23
96906	MS521059-3		18	10
96906	MS90725-113	5305-01-325-8388	2	1
80204	MS90725-116	5305-00-071-2072	38	9
96906	MS90725-14	5305-00-071-2237	12	1
96906	MS90725-26		6	24
96906	MS90725-34	5306-00-225-8499	4	19
96906	MS90725-38	5305-00-226-4831	6	28
96906	MS90725-58	5305-00-115-9526	9	16
96906	MS90725-58	5305-00-115-9526	23	3
96906	MS90725-58	5305-00-115-9526	38	7
96906	MS90725-60	5305-00-269-3211	6	32
96906	MS90725-60	5305-00-269-3211	9	11
96906	MS90725-61	5305-00-543-2419	2	11
96906	MS90725-61	5305-00-543-2419	3	13
96906	MS90725-61	5305-00-543-2419	4	15
96906	MS90725-61	5305-00-543-2419	5	6
96906	MS90725-61	5305-00-543-2419	7	8
96906	MS90725-68	5305-00-269-3218	3	14
96906	MS90725-73	5305-01-351-0787	3	17
96906	MS90725-8	5305-00-225-3839	4	19
96906	MS90725-8	5305-00-225-3839	8	13
96906	MS90725-8	5305-00-225-3839	14	8
96906	MS90725-8	5305-00-225-3839	20	17
80205	NAS1149GN832P		13	15
80205	NAS1149G0432P	5310-01-398-0341	4	21
80205	NAS1149G0432P	5310-01-398-0341	8	15
80205	NAS1149G0432P	5310-01-398-0341	13	32
80205	NAS1149G0432P	5310-01-398-0341	14	2
80205	NAS1149G0432P	5310-01-398-0341	20	14
80205	NAS1149G0632P		23	2
80205	NAS1515F4H		14	6
76761	N1379		38	1
76761	N3129		18	3
07851	W0367-006		7	29
81640	W1016	5930-00-729-8108	22	1
77342	W23-X1A1G-5	5925-00-074-9180	11	23
34899	0443167251	5950-01-388-0744	9	17
1DU88	1TL1-3		11	8
1DU88	1TL1-3		2	8

FSCM	PART NUMBER	STOCK NUMBER	FIGURE NO	ITEM NO
04EE5	10-4BSSN		7	26
54836	10-4855-AU		6	35
F9948	101-301-191		5	1
F9948	01-301-191		6	14
F9948	101-301-191		6	27
F9948	101-301-191		6	43
F9948	101-301-191		7	24
F9948	101-301-191		9	2
22165	105CFH1-8		3	3
D8889	110.116.5		1	15
0ATZ6	11355T29		8	21
19207	11674728	5935-01-097-9974	7	9
19207	11674728	5935-01-097-9974	13	20
19220	1170-2		5	8
19220	1170-2		8	9
19220	1170-3		5	12
19220	1170-3		8	7
D8889	118.127.4		29	10
03479	15000159		16	17
03479	15000162		16	6
72794	150003	5342-01-163-1299	13	16
03479	15050525		16	8
03479	15050526		16	16
03479	15050527		16	5
0BT82	1637-025800		16	12
0DG59	17/1600/1		7	6
D8889	175.078.1		27	1
C4519	191253139H		19	21
1DU88	2TL1-50M		12	15
19328	2051		11	15
62502	2196-S		10	2
D8889	237.027.2		28	9
D8889	238.018.2		25	4
0AKY4	24306E-606-666		10	6
0ATZ6	29695T91		8	23
0L4R8	3-520107-2		15	3
0L4R8	3-520117-2		15	2
62502	3010.0379		9	12
62502	3013.0032		9	13
13445	30172-15		7	36
79470	3152X6	4730-00-427-5121	16	7
79470	3152X8	4730-00-014-4027	16	9
0AKY4	3169X4		13	27
0AKY4	32206X6X2		16	13
2L549	33260		13	29
3A05A	3458T44		6	48
0ATZ6	3706T131		8	20
3A054	3896T1		6	47
19203	4001	5930-00-681-4394	12	26
D8889	415.079.4		38	15
D8889	415.153.4		30	19

FSCM	PART NUMBER	STOCK NUMBER	FIGURE NO	ITEM NO
D8889	415.156.4		33	28
D8889	418.017.4		36	3
D8889	421.069.4		34	1
D8889	421.070.4		34	7
D8889	423.022.4		34	5
D8889	424.021.4		34	3
D8889	426.031.4		35	8
D8889	426.032.4		35	6
D8889	427.043.4		35	2
D8889	427.044.4		35	3
D8889	43F		19	14
D8889	440.064.4		19	12
D8889	452.134.4		36	14
D8889	453.002.4		32	9
D8889	465.169.4		36	7
D8889	465.177.4		30	3
D8889	4658.006.4		37	5
D8889	470.022.4		36	10
D8889	470.023.4		36	10
D8889	470.024.4		36	10
13074	50151		11	14
D8889	508.019.4		30	5
D8889	509.040.4		28	1
D8889	512.006.4		37	1
D8889	512.394.4		29	3
D8889	512.113.4		37	3
D8889	514.001.4		36	19
D8889	514.096.2		30	1
D8889	514.097.2		30	18
D8889	514.104.2		33	16
D8889	514.105.4		30	7
D8889	515.103.4		25	3
D8889	515.353.2		33	5
D8889	515.357.2		27	4
D8889	519.038.4		36	17
D8889	521.009.4		30	11
D8889	522.019.4		32	16
D8889	522.022.4		33	20
D8889	531.009.4		35	11
D8889	535.143.1		36	4
D8889	536.033.1		26	18
D8889	536.219.2		26	19
D8889	536.305.2		26	22
D8889	536.306.2		26	13
D8889	536.307.2		26	20
D8889	536.308.2		26	21
D8889	537.015.1		33	4
D8889	540.051.1		36	20
D8889	541.038.2		23	12
D8889	541.050.2E		19	15
D8889	547.070.2		31	4

FSCM	PART NUMBER	STOCK NUMBER	FIGURE NO	ITEM NO
D8889	547.206.1		31	1
D8889	547.407.1		22	3
D8889	555.022.2		25	1
D8889	555.128.2		28	16
86928	5613-49-062		20	5
86928	570-140-120N		17	26
1DU88	6041H202		14	9
D8889	616.070.4		33	14
D8889	625.187.4		28	7
D8889	633.053.5		33	29
D8889	633.054.5		33	30
D8889	651.051.4		33	24
0FDK1	70064		3	6
D8889	711.612.5		37	2
D8889	714.014.8		30	13
D8889	715.093.8		36	9
D8889	721.126.7		29	6
D8889	724.038.7		28	13
D8889	725.125.8		36	1
D8889	726.036.5		36	6
D8889	727.055.4		32	12
D8889	730.058.4		36	5
D8889	731.230.8		33	9
D8889	738.293.4		32	8
D8889	751.103.4		32	1
D8889	761.022.6		28	10
D8889	762.146.5		28	17
D8889	770.122.4		32	13
D8889	770.201.4		26	10
D8889	770.269.4		28	6
D8889	770.270.4		29	5
D8889	770.274.4		29	8
D8889	770.277.4		34	4
D8889	770.288.4		33	23
D8889	770.290.4		33	13
D8889	770.292.4		28	5
D8889	771.003.4		33	10
D8889	775.038.4		36	13
D8889	775.039.4		36	13
D8889	775.040.4		36	13
D8889	800.017.2		36	11
D8889	804.002.4		36	18
D8889	805.092.4		35	10
D8889	807.011.4		30	15
D8889	847.123.4		27	7
D8889	850.011.4		34	6
D8889	850.013.4		36	16
D8889	850.066.4		28	2
D8889	850.067.4		27	6
D8889	850.185.2		28	12
D8889	850.195.4		33	8

FSCM	PART NUMBER	STOCK NUMBER	FIGURE NO	ITEM NO
D8889	850.197.4		33	12
1DU88	8504K2		13	5
1DU88	8510K11		11	7
1DU88	8510K11		12	9
1DU88	8530K2		11	6
1DU88	8530K2		12	14
0ELG7	853009-16		24	3
D8889	856.002.4		19	11
1DU88	8597K1		12	13
D8889	861.096.2		37	4
D8889	861.104.2		35	9
D8889	890.02.09		30	2
D8889	890.02.24		30	4
D8889	890.08.01		30	17
D8889	890.08.02		32	3
D8889	890.10.03		29	4
D8889	890.10.03		33	2
D8889	890.10.05		33	19
D8889	890.10.05		33	19
D8889	890.10.07		32	11
D8889	890.11.03		26	4
D8889	890.11.03		27	3
D8889	890.11.03		28	4
D8889	890.11.03		33	25
D8889	890.20.33		36	2
D8889	890.24.02		28	11
D8889	890.28.03		37	6
D8889	890.28.14		26	12
D8889	890.28.17		26	11
D8889	890.28.32		33	15
D8889	890.28.66		35	1
D8889	890.31.07		28	3
D8889	890.31.07		28	15
D8889	890.31.08		28	8
D8889	890.31.08		29	11
D8889	890.31.10		29	1
D8889	890.31.10		34	2
D8889	890.31.11		29	2
D8889	890.31.11		31	2
D8889	890.31.28		26	3
D8889	890.31.28		32	2
D8889	890.31.28		32	14
D8889	890.31.29		31	3
D8889	890.31.90		36	8
D8889	890.36.95		33	26
D8889	890.37.20		33	18
D8889	890.37.26		33	17
D8889	890.38.03		27	2
D8889	890.38.03		33	1
D8889	890.38.05		26	7
D8889	890.38.05		30	8

FSCM	PART NUMBER	STOCK NUMBER	FIGURE NO	ITEM NO
D8889	890.38.07		32	10
D8889	890.38.07		33	21
D8889	890.54.02		33	22
D8889	890.59.51		32	7
D8889	890.61.05		36	21
D8889	890.66.03		30	9
D8889	890.66.04		32	5
D8889	890.67.05		33	27
D8889	890.68.10		36	12
D8889	890.74.04		33	6
D8889	890.74.06		26	8
D8889	890.74.06		27	5
D8889	890.74.09		30	6
D8889	890.74.11		28	21
D8889	890.74.16		26	1
D8889	890.74.17		28	18
D8889	890.74.48		26	15
D8889	890.74.48		35	5
D8889	890.77.02		26	2
D8889	890.77.06		26	18
D8889	890.77.06		35	4
D8889	890.78.02		28	14
D8889	890.95.08		32	4
D8889	890.95.10		29	9
D8889	905.214.5		30	16
D8889	905.220.5		30	10
D8889	907.001.4		36	15
D8889	911.004.4		32	6
0FDK1	913-1763		19	23
D8889	917.287.4		29	7
D8889	921.026.4		33	11
D8889	922.010.4		26	5
D8889	922.077.2		23	10
D8889	923.892.4		23	11
D8889	927.022.4		35	7
D8889	928.093.4		33	3
3A054	9311K63		12	2
3A054	93620A905		11	18
3A054	93620A905		12	24
D8889	945.009.4		26	9
D8889	945.018.4		26	9
D8889	945.036.4		26	9
6E876	94800A740		20	6
62502	96-9000	6115-01-452-6513	1	
62502	96-9001		4	14
62502	96-9002		2	13
62502	96-9005		6	18
62502	96-9006		6	17
62502	96-9007		6	31
62502	96-9008		6	16

FSCM	PART NUMBER	STOCK NUMBER	FIGURE NO	ITEM NO
62502	96-9009		6	21
62502	96-9010		6	33
62502	96-9011		6	11
62502	96-9011		6	45
62502	96-9012		6	2
62502	96-9013		6	13
62502	96-9013		6	34
62502	96-9014		6	42
62502	96-9017		6	5
62502	96-9017		6	39
62502	96-9018		6	4
62502	96-9018		6	38
62502	96-9019		6	40
62502	96-9020		6	1
62502	96-9027		6	49
62502	96-9028		6	9
62502	96-9029		6	15
62502	96-9031		1	7
62502	96-9032		6	7
62502	96-9032		6	38
62502	96-9033		6	6
62502	96-9035		4	18
62502	96-9038		5	9
62502	96-9038		8	8
62502	96-9039		5	2
62502	96-9040		5	4
62502	96-9041		5	5
62502	96-9042		5	11
62502	96-9045		7	19
62502	96-9050		8	1
62502	96-9060		9	6
62502	96-9065		9	3
62502	96-9066		10	1
62502	96-9069		10	8
62502	96-9070		10	3
62502	96-9071		10	7
62502	96-9075		2	12
62502	96-9076		2	5
62502	96-9077		2	9
62502	96-9077		8	16
62502	96-9079		7	1
62502	96-9083		7	20
62502	96-9089		7	14
62502	96-9092		8	6
62502	96-9094		8	24
62502	96-9095		7	22
62502	96-9096		9	1
62502	96-9097		8	25
62502	96-9098		5	3

FSCM	PART NUMBER	STOCK NUMBER	FIGURE NO	ITEM NO
62502	96-9098		7	5
62502	96-9099		7	4
62502	96-9100		1	6
62502	96-9101		1	4
62502	96-9102		1	3
62502	96-9103		1	8
62502	96-9104		1	9
62502	96-9105		1	10
62502	96-9106		7	30
62502	96-9111		8	19
62502	96-9112		8	11
62502	96-9114		7	16
62502	96-9116		7	12
62520	96-9120		7	33
62520	96-9122		4	23
62502	96-9124		8	17
62502	96-9129		1	5
62502	96-9130		1	14
62502	96-9131		1	16
62502	96-9145		8	22
62502	96-9150		4	22
62502	96-9151		13	1
62502	96-9156-1		13	8
62502	96-9156-2		13	6
62502	96-9156-3		13	7
62502	96-9157		13	24
62502	96-9158-3		13	21
62502	96-9158-3		17	28
62502	96-9158-4		13	22
62502	96-9158-4		17	27
62502	96-9160		13	9
62502	96-9166-1		13	30
62502	96-9166-2		15	1
62502	96-9166-3		14	4
62502	96-9166-4		16	15
62502	96-9166-5		23	8
62502	96-9166-6		23	5
62502	96-9166-7		16	11
62502	96-9166-8		13	28
62502	96-9170		14	5
62502	96-9175		14	3
62502	96-9179		16	3
62502	96-9180		16	4
62502	96-9191		13	19
62502	96-9196		14	10
62502	96-9202		13	37
62502	96-9203		14	12
62502	96-9204		14	7
62502	96-9205		13	2
62502	96-9222		3	16

FSCM	PART NUMBER	STOCK NUMBER	FIGURE NO	ITEM NO
62502	96-9223		3	20
62502	96-9224		3	15
62502	96-9226		3	19
62502	96-9227		3	18
62502	96-9228		3	21
62502	96-9229		3	5
62502	96-9229		3	10
62502	96-9235		3	1
62502	96-9240		3	2
0VKD6	96-9247-3		21	6
0VKD6	96-9247-4		20	9
0VKD6	96-9247-5		19	6
0VKD6	96-9247-5		19	9
0VKD6	96-9247-5		21	3
0VKD6	96-9247-5		38	14
0VKD6	96-9247-6		4	2
0VKD6	96-9247-6		17	23
0VKD6	96-9248-3		21	5
0VKD6	96-9248-4		20	10
0VKD6	96-9248-5		19	7
0VKD6	96-9248-5		19	10
0VKD6	96-9248-5		21	4
0VKD6	96-9248-6		17	24
0VKD6	96-9249-029-SH		21	7
0VKD6	96-9249-056-FH		22	9
0VKD6	96-9249-084-HH		19	5
0VKD6	96-9249-084-HH		21	2
0VKD6	96-9249-090-HH		38	13
0VKD6	96-9249-092-HH		19	8
0VKD6	96-9249-103-HH		17	22
62502	96-9249-105-SH		17	19
0VKD6	96-9249-125SH-S		4	4
0VKD6	96-9249-128SH-S		4	3
62502	96-9250		4	5
62502	96-9251		19	13
62502	96-9252		17	3
62502	96-9253		17	2
62502	96-9257		23	4
62502	96-9261		4	6
62502	96-9266		17	21
62502	96-9267		17	25
62502	96-9268		17	20
62502	96-9270		17	4
62502	96-9275		18	4
62502	96-9277		17	7
62502	96-9278		17	6
62502	96-9279		17	13
62502	96-9282		18	7
62502	96-9283		18	11
62502	96-9284		18	9

FSCM	PART NUMBER	STOCK NUMBER	FIGURE NO	ITEM NO
62502	96-9285		17	18
62502	96-9292		38	2
62502	96-9293		38	12
62502	96-9295		38	4
62502	96-9305		17	1
62502	96-9307		38	8
62502	96-9309		20	4
62502	96-9310		20	3
62502	96-9312		20	12
62502	96-9314		20	11
62502	96-9315		20	16
62502	96-9316		20	15
62502	96-9317		20	2
62502	96-9325		19	19
62502	96-9326		19	20
62502	96-9327		19	25
62502	96-9330		19	22
62502	96-9340		21	1
62502	96-9344		19	1
62502	96-9345		19	2
62502	96-9352		19	17
62502	96-9355		19	4
62502	96-9362		24	1
62502	96-9364		24	4
62502	96-9366		24	12
62502	96-9376-04		11	22
62502	96-9390		1	2
62502	96-9392		1	1
62502	96-9404		12	23
62502	96-9412		12	19
62502	96-9422		12	22
62502	96-9425		12	4
0VKD6	96-9429-058-HH		20	8
0VKD6	96-9429-49		17	5
62502	96-9430		12	3
62502	96-9431		12	7
62502	96-9433		12	10
62502	96-9440		4	22
62502	96-9450		11	10
62502	96-9453		11	4
62502	96-9453-1		11	9
62502	96-9461		11	20
62502	96-9462		11	16
62502	96-9464		11	21
D8889	971.481.5		26	6
D8889	971.495.5		23	13
D8889	971.496.5		33	7
D8889	973.028.5		26	16
D8889	982.334.4		25	2

NATIONAL STOCK NUMBER INDEX

STOCK NUMBER	FIGURE	ITEM	STOCK NUMBER	FIGURE	ITEM
5305-00-993-1848	9	18	5342-01-163-1299	13	16
5305-00-993-1848	11	1	5305-01-325-8388	2	1
5305-00-993-1848	12	16	5305-01-351-0787	3	17
5305-00-993-1848	13	18	5950-01-388-0744	9	17
5305-00-993-1848	17	15	5310-01-398-0341	4	21
5305-00-993-1848	18	2	5310-01-398-0341	8	15
5305-00-993-1851	4	13	5310-01-398-0341	13	32
5305-00-993-1851	7	18	5310-01-398-0341	14	2
5305-00-993-1851	8	2	5310-01-398-0341	20	14
4730-01-096-3170	13	33	6115-01-452-6513	1	
5935-01-097-9974	7	9			
5935-01-097-9974	13	20			

FIGURE AND ITEM NUMBER INDEX

FIGURE NO	ITEM NO	STOCK NUMBER	FSCM	PART NUMBER
1		6115-01-452-6513	62502	96-9000
1	1		62502	96-9392
1	2		62502	96-9390
1	3		62502	96-9102
1	4		62502	96-9101
1	5		62502	96-9129
1	6		62502	96-9100
1	7		62502	96-9031
1	8		62502	96-9103
1	9		62502	96-9104
1	10		62502	96-9105
1	11		96906	MS35307-413
1	12	5310-00-584-5272	96906	MS35338-48
1	13	5310-00-809-5997	96906	MS27183-17
1	14		62502	96-9130
1	15		D8889	110.116.5
1	16		62502	96-9131
2	1	5305-01-325-8388	96906	MS90725-113
2	2	5310-00-809-5997	96906	MS27183-17
2	3		96906	MS17829-6C
2	4	5310-00-641-9464	96906	MS27183-13
2	5		62502	96-9076
2	6	5305-00-990-1347	96906	MS35190-292
2	7	5310-00-619-4848	96906	MS27183-51
2	8		96906	MS27189-4C
2	9		62502	96-9077
2	10		96906	MS17829-8C
2	11	5305-00-543-2419	96906	MS90725-61
2	12		62502	96-9075
2	13		62502	96-9002
3	1		62502	96-9235
3	2		62502	96-9240
3	3		22165	105CFH1-8
3	4		96906	MS35842-14
3	5		62502	96-9229
3	6		0FDK1	70064
3	7		96906	MS35842-14
3	8	5310-00-407-9566	96906	MS35338-45
3	9		96906	MS16997-82
3	10		62502	96-9229
3	11	5310-00-641-9464	96906	MS27183-13
3	12	5310-00-616-2200	96906	MS35337-46
3	13	5305-00-543-2419	96906	MS90725-61
3	14	5305-00-269-3218	96906	MS90725-68
3	15	5310-00-877-5798	96906	MS21044-D3
3	16		62502	96-9222

FIGURE NO	ITEM NO	STOCK NUMBER	FSCM	PART NUMBER
3	17	5305-01-351-0787	96906	MS90725-73
3	18		62502	96-9227
3	19		62502	96-9226
3	20		62502	96-9223
3	21		62502	96-9228
4	1		0AKY4	C5506X6
4	2		0VKD6	96-9247-6
4	3		0VKD6	96-9249-128SH-S
4	4		0VKD6	96-9249-125SH-S
4	5		62502	96-9250
4	6		62502	96-9261
4	7	5310-00-877-5798	96906	MS21044-D3
4	8	5310-00-167-0818	88044	AN960-10
4	9		96906	MS21919-12
4	10	5305-00-989-7343	96906	MS35191-276
4	11	5310-00-167-0818	88044	AN960-10
4	12	5310-00-045-3296	96906	MS35338-43
4	13	5305-00-993-1851	96906	MS35207-267
4	14		62502	96-9001
4	15	5305-00-543-2419	96906	MS90725-61
4	16	5310-00-616-2200	96906	MS35337-46
4	17	5310-00-641-9464	96906	MS27183-13
4	18		62502	96-9035
4	19	5305-00-225-3839	96906	MS90725-8
4	20	5310-00-582-5965	96906	MS35338-44
4	21	5310-01-398-0341	80205	NAS1149G0432P
4	22		62502	96-9440
4	23	5306-00-225-8499	96906	MS90725-34
4	24	5310-00-407-9566	96906	MS35338-45
4	25	5310-00-809-3078	96906	MS27183-11
4	26		62502	96-9150
4	27		62520	96-9122
5	1		F9948	101-301-191
5	2		62502	96-9039
5	3		62502	96-9098
5	4		62502	96-9040
5	5		62502	96-9041
5	6	5305-00-543-2419	96906	MS90725-61
5	7	5310-00-641-9464	96906	MS27183-13
5	8		19220	1170-2
5	9		62502	96-9038
5	10		96906	MS17829-6C
5	11		62502	96-9042
5	12		19220	1170-3
6	1		62502	96-9020
6	2		62502	96-9012
6	3	5305-00-988-1727	96906	MS35206-283
6	4		62502	96-9018
6	5		62502	96-9017

FIGURE NO	ITEM NO	STOCK NUMBER	FSCM	PART NUMBER
6	6		62502	96-9033
6	7		62502	96-9032
6	8		96906	MS35191-303
6	9		62502	96-9028
6	10		88044	AN565-1032-6
6	11		62502	96-9011
6	12		88044	AN565-416-20
6	13		62502	96-9013
6	14		F9948	101-301-191
6	15		62502	96-9029
6	16		62502	96-9008
6	17		62502	96-9006
6	18		62502	96-9005
6	19		9X737	B40R
6	20		96906	MS16997-84
6	21		62502	96-9009
6	22		96906	MS17829-4C
6	23	5310-00-809-5997	96906	MS51859-17
6	24		96906	MS90725-26
6	25		96906	MS17829-6C
6	26	5310-00-641-9464	96906	MS27183-13
6	27		F9948	101-301-191
6	28	5305-00-226-4831	96906	MS90725-38
6	29	5310-00-637-9541	96906	MS35338-46
6	30	5310-00-641-9464	96906	MS27183-13
6	31		62502	96-9007
6	32	5305-00-269-3211	96906	MS90725-60
6	33		62502	96-9010
6	34		62502	96-9013
6	35		54836	10-4855-AU
6	36	5305-00-988-1727	96906	MS35206-283
6	37		62502	96-9019
6	38		62502	96-9032
6	39		62502	96-9017
6	40		62502	96-9018
6	41		96906	MS35191-303
6	42		62502	96-9014
6	43		F9948	101-301-191
6	44		88044	AN565-416-20
6	45		62502	96-9011
6	46		88044	AN565-1032-6
6	47		3A054	3896T1
6	48		3A05A	3458T44
6	49		62502	96-9027
7	1		62502	96-9079
7	2	5310-00-167-0818	88044	AN960-10
7	3	5305-00-993-1848	96906	MS35207-265
7	4		62502	96-9099
7	5		62502	96-9098

FIGURE NO	ITEM NO	STOCK NUMBER	FSCM	PART NUMBER
7	6		0DG59	17/1600/1
7	7	5310-00-641-9464	96906	MS27183-13
7	8	5305-00-543-2419	96906	MS90725-61
7	9	5935-01-097-9974	19207	11674728
7	10	5305-00-989-7434	96906	MS35207-263
7	11	5310-00-045-3296	96906	MS35338-43
7	12		62502	96-9116
7	13		96906	MS35190-273
7	14		62502	96-9089
7	15		96906	MS21044-D3
7	16		62502	96-9114
7	17	5305-00-983-7470	96906	MS16997-153
7	18	5305-00-993-1851	96906	MS35207-267
7	19		62502	96-9045
7	20		62502	96-9083
7	21		96906	MS17829-6C
7	22		62502	96-9095
7	23		62520	96-9120
7	24		F9948	101-301-191
7	25	5305-00-978-9381	96906	MS16997-63
7	26		04EE5	10-4B SSN
7	27		96906	MS17829-4C
7	28	5310-00-619-4848	96906	MS27183-51
7	29		07851	W0367-006
7	30		62502	96-9106
7	31		96906	MS27183-43
7	32		96906	MS35206-232
7	33		62502	28014206
7	34		96906	MS21044-D3
7	35		96906	MS35207-261
7	36		13445	30172-15
7	37		96906	MS21044N06
7	38		74440	85094
7	39		62502	96-9359-1
8	1		62502	96-9050
8	2	5305-00-993-1851	96906	MS35207-267
8	3	5310-00-167-0818	88044	AN960-10
8	4	5310-00-877-5798	96906	MS21044-D3
8	5		96906	MS35190-319
8	6		62502	96-9092
8	7		19220	1170-3
8	8		62502	96-9038
8	9		19220	1170-2
8	10		96906	MS17829-6C
8	11		62502	96-9112
8	12		96906	MS35190-322
8	13	5305-00-225-3839	96906	MS90725-8
8	14	5310-00-582-5965	96906	MS35338-44
8	15	5310-01-398-0341	80205	NAS1149G0432P
8	16		62502	96-9077
8	17		62502	96-9124
8	18	5305-00-993-1848	96906	MS35207-265

FIGURE NO	ITEM NO	STOCK NUMBER	FSCM	PART NUMBER
8	19		62502	96-9111
8	20		0ATZ6	3706T131
8	21		0ATZ6	11355T29
8	22		62502	96-9145
8	23		0ATZ6	29695T91
8	24		62502	96-9094
8	25		62502	96-9097
9	1		62502	96-9096
9	2		F9948	101-301-191
9	3		62502	96-9065
9	4	5310-00-167-0818	88044	AN960-10
9	5	5310-00-877-5798	96906	MS21044-D3
9	6		62502	96-9060
9	7	5305-00-989-7434	96906	MS35207-263
9	8	5310-00-045-3296	96906	MS35338-43
9	9	5310-00-641-9464	96906	MS27183-13
9	10	5310-00-637-9541	96906	MS35338-46
9	11	5305-00-269-3211	96906	MS90725-60
9	12		62502	3010.0379
9	13		62502	3013.0032
9	14	5310-00-809-3078	96906	MS27183-11
9	15	5310-00-407-9566	96906	MS35338-45
9	16	5305-00-115-9526	96906	MS90725-58
9	17	5950-01-388-0744	34899	0443167251
9	18	5305-00-993-1848	96906	MS35207-265
10	1		62502	96-9066
10	2		62502	2196-S
10	3		62502	96-9070
10	4	5310-00-619-4848	96906	MS27183-51
10	5	5305-00-068-0502	96906	MS16997-60
10	6		0AKY4	24306E-606-666
10	7		62502	96-9071
10	8		62502	96-9069
10	9		50184	ICS10412X-12RB9C
				AMXS-S-0210
11	1	5305-00-993-1848	96906	MS35207-265
11	2	5310-00-167-0818	88044	AN960-10
11	3		96906	MS34338-43
11	4		62502	96-9453
11	5		1DU88	2TL1-50M
11	6		1DU88	8530K2
11	7		1DU88	8510K11
11	8		1DU88	1TL1-3
11	9		62502	96-9453-1
11	10		62502	96-9450
11	11	5305-00-984-4992	96906	MS35206-232
11	12		96906	MS21004-N08
11	13		13074	50151
11	14	5310-00-877-5798	96906	MS21044-D3
11	15		19328	2051
11	16		62502	96-9462
11	17	5305-00-984-4983	96906	MS35206-226

FIGURE NO	ITEM NO	STOCK NUMBER	FSCM	PART NUMBER
11	18		3A054	93620A905
11	19		96906	MS21004-N08
11	20		62502	96-9461
11	21		62502	96-9464
11	22		62502	96-9376-04
11	23	5925-00-074-9180	77342	W23-X1A1G-5
12	1	5305-00-071-2237	96906	MS90725-14
12	2		3A054	9311K63
12	3		62502	96-9430
12	4		62502	96-9425
12	5	5310-00-167-0766	88044	AN970-4
12	6		96906	MS17829-4C
12	7		62502	96-9431
12	8		1DU88	1TL1-3
12	9		1DU88	8510K11
12	10		62502	96-9431-1
12	11		05VU8	E22GDB2
12	12		05VU8	E22B1
12	13		1DU88	8597K1
12	14		1DU88	8530K2
12	15		1DU88	2TL1-50M
12	16	5305-00-993-1848	96906	MS35207-265
12	17		96906	MS35338-43
12	18		88044	AN960-10
12	19		62502	96-9412
12	20	5305-00-984-4992	96906	MS35206-232
12	21		96906	MS21004-N08
12	22		62502	96-9422
12	23		62502	96-9404
12	24		62502	MS24532-2
12	25	5305-00-984-4983	96906	MS35206-226
12	26	5930-00-681-4394	19203	4001
12	27		96906	MS24532-2
13	1		62502	96-9151
13	2		62502	96-9205
13	3	5305-00-984-7361	96906	MS35191-270
13	4	5310-00-045-3296	96906	MS35338-43
13	5	5305-00-989-7434	96906	MS35207-263
13	6		62502	96-9156-2
13	7		62502	96-9156-3
13	8		62502	96-9156-1
13	9		62502	96-9160
13	10		96906	MS35691-29
13	11		96906	MS35335-36
13	12		96906	MS35691-37
13	13		96906	MS35335-37
13	14		96906	MS21044-N06
13	15		80205	NAS1149GN832P
13	16	5342-01-163-1299	72794	150003
13	17		96906	MS35206-247

FIGURE NO	ITEM NO	STOCK NUMBER	FSCM	PART NUMBER
13	18	5305-00-993-1848	96906	MS35207-265
13	19		62502	96-919t
13	20	5935-01-097-9974	19207	11674728
13	21		62502	96-9158-3
13	22		62502	96-9158-4
13	23		96906	MS21044-N3
13	24		62502	96-9157
13	25	4730-00-277-2448	79470	C5405X4X4
13	26		96906	MS35190-291
13	27		0AKY4	3169X4
13	28		62502	96-9166-8
13	29		2L549	33260
13	30		62502	96-9166-1
13	31		96906	MS17829-4C
13	32	5310-01-398-0341	80205	NAS1149G0432P
13	33	4730-01-096-3170	96906	C5405X5X4
13	34		62502	96-9202
14	1		96906	MS17829-4C
14	2	5310-01-398-0341	80205	NAS1149G0432P
14	3		62502	96-9175
14	4		62502	96-9166-3
14	5		62502	96-9170
14	6		80205	NAS1515F4H
14	7		62502	96-9204
14	8	5305-00-225-3839	96906	MS90725-8
14	9		1DU88	6041H202
14	10		62502	96-9196
14	11	5310-00-167-0766	88044	AN970-4
14	12		62502	96-9203
14	13		96906	MS35190-291
15	1		62502	96-9166-2
15	2		0L4R8	3-520117-2
15	3		0L4R8	3-520107-2
15	4		0AKY4	C5205X4
15	5		71425	E1012
16	1	5305-00-406-6695	96906	MS35206-337
16	2	5310-00-045-3296	96906	MS35338-43
16	3		62502	96-9179
16	4		62502	96-9180
16	5		03479	15050527
16	6		03479	15000162
16	7	4730-00-427-5121	79470	3152X6
16	8		03479	15050525
16	9	4730-00-014-4027	79470	3152X8
16	10		0AKY4	C5525X5
16	11		62502	96-9166-7
16	12		0BT82	1637-025800
16	13		0AKY4	32206X6X2
16	14		0AKY4	C5405X5
16	15		62502	96-9166-4
16	16		03479	15050526

FIGURE NO	ITEM NO	STOCK NUMBER	FSCM	PART NUMBER
16	17		03479	15000159
16	18		0AKY4	C5525X4
17	1		62502	96-9305
17	2		62502	96-9253
17	3		62502	96-9252
17	4		0VKD6	96-9429-056
17	5		62502	96-9270
17	6		62502	96-9278
17	7		62502	96-9277
17	8		96906	MS35207-265
17	9	5310-00-167-0818	88044	AN960-10
17	10		96906	MS16997-64
17	11	5310-00-619-4848	96906	MS27183-51
17	12		96906	MS17829-4C
17	13		62502	96-9279
17	14	5310-00-877-5798	96906	MS21044-D3
17	15	5305-00-993-1848	96906	MS35207-265
17	16	5310-00-045-3296	96906	MS35338-43
17	17	5310-00-167-0818	88044	AN960-10
17	18		62502	96-9285
17	19		62502	96-9249-105-SH
17	20		62502	96-9268
17	21		62502	96-9266
17	22		0VKD6	96-9249-103-HH
17	23		0VKD6	96-9247-6
17	24		0VKD6	96-9248-6
17	25		62502	96-9267
17	26		86928	570-140-120N
17	27		62502	96-9158-4
17	28		62502	96-9158-3
17	29		0VKD6	96-9248-4
18	1	5310-00-167-0818	88044	AN960-10
18	2	5305-00-993-1848	96906	MS35207-265
18	3		76761	N3129
18	4		62502	96-9275
18	5	5305-00-989-7434	96906	MS35207-263
18	6	5310-00-045-3296	96906	MS35338-43
18	7		62502	96-9282
18	8		07851	AD44AH
18	9		62502	96-9284
18	10		96906	MS521059-3
18	11		62502	96-9283
18	12	5310-00-877-5798	96906	MS21044-D3
18	13		07851	GAMD34A
19	1		62502	96-9344
19	2		62502	96-9345
19	3		88044	AN530-2-4
19	4		62502	96-9355
19	5		0VKD6	96-9249-084-HH

FIGURE NO	ITEM NO	STOCK NUMBER	FSCM	PART NUMBER
19	6		0VKD6	96-9247-5
19	7		0VKD6	96-9248-5
19	8		0VKD6	96-9249-092-HH
19	9		0VKD6	96-9247-5
19	10		0VKD6	96-9248-5
19	11		D8889	856.002.4
19	12		D8889	440.064.4
19	13		62502	96-9251
19	14		D8889	43F
19	15		D8889	541.050.2E
19	16		06YT7	181SN
19	17		62506	96-9352
19	18		0AKY4	C5355X6X6
19	19		62502	96-9325
19	20		62502	96-9326
19	21		C4519	191253139H
19	22		62502	96-9330
19	23		0FDK1	913-1763
19	24		12088	PC501B
19	25		62502	96-9327
20	1		96906	MS35842-12
20	2		62502	96-9317
20	3		62502	96-9310
20	4		62502	96-9309
20	5		86928	5613-49-062
20	6		6E876	94800A740
20	7		4Z382	CA6306
20	8		0VKD6	96-9429-058-HH
20	9		0VKD6	96-9247-4
20	10		0VKD6	96-9248-4
20	11		62502	96-9314
20	12		62502	96-9312
20	13		96906	MS17829-4C
20	14	5310-01-398-0341	80205	NAS1149G0432P
20	15		62502	96-9316
20	16		62502	96-9315
20	17	5305-00-225-3839	96906	MS90725-8
21	1		62502	96-9340
21	2		0VKD6	96-9249-084-HH
21	3		0VKD6	96-9247-5
21	4		0VKD6	96-9248-5
21	5		0VKD6	96-9248-3
21	6		0VKD6	96-9247-3
21	7		0VKD6	96-9249-029-SH
21	8		96906	MS35207-267
21	9		88044	AN960-10
21	10		96906	MS35338-43
22	1	5930-00-729-8108	81640	W1016
22	2		D8889	547.407.1
22	3		D8889	890.08.02
22	4		D8889	890.3 8.03

FIGURE NO	ITEM NO	STOCK NUMBER	FSCM	PART NUMBER
22	5		D8889	555.164.2
22	6		D8889	890.37.09
22	7		D8889	923.931.4
22	8		0VKD6	96-9249-056-FH
22	9		D8889	890.10.03
23	1		96906	MS3367-5
23	2		80205	NAS1149G0632P
23	3	5305-00-115-9526	96906	MS90725-58
23	4		62502	96-9257
23	5		62502	96-9166-6
23	6		0AKY4	C5506X5
23	7		0AKY4	C5506X4
23	8		62502	96-9166-5
23	9		96906	MS17829-6C
23	10		D8889	922.077.2
23	11		D8889	923.892.4
23	12		D8889	541.038.2
23	13		D8889	971.495.5
24	1		62502	96-9362
24	2		62502	96-9366
24	3		0ELG7	853009-16
24	4		62502	96-9364
25	1		D8889	555.022.2
25	2		D8889	982.334.4
25	3		D8889	515.103.4
25	4		D8889	238.018.2
26	1		D8889	890.74.16
26	2		D8889	890.77.02
26	3		D8889	890.31.28
26	4		D8889	890.11.03
26	5		D8889	922.010.4
26	6		D8889	971.481.5
26	7		D8889	890.38.05
26	8		D8889	890.74.06
26	9		D8889	945.009.4
26	9		D8889	945.018.4
26	9		D8889	945.036.4
26	10		D8889	770.201.4
26	11		D8889	890.28.17
26	12		D8889	890.28.14
26	13		D8889	536.306.2
26	14		D8889	971.482.5
26	15		D8889	890.74.48
26	16		D8889	973.028.5
26	17		D8889	890.77.06
26	18		D8889	536.033.1
26	19		D8889	536.219.2
26	20		D8889	536.307.2
26	21		D8889	536.308.2
26	22		D8889	536.305.2
27	1		D8889	175.078.1
27	2		D8889	890.38.03

FIGURE NO	ITEM NO	STOCK NUMBER	FSCM	PART NUMBER
27	3		D8889	890.11.03
27	4		D8889	515.357.2
27	5		D8889	890.74.06
27	6		D8889	850.067.4
27	7		D8889	847.123.4
28	1		D8889	509.040.4
28	2		D8889	850.066.4
28	3		D8889	890.31.07
28	4		D8889	890.11.03
28	5		D8889	770.292.4
28	6		D8889	770.269.4
28	7		D8889	625.187.4
28	8		D8889	890.31.08
28	9		D8889	237.027.2
28	10		D8889	761.022.6
28	11		D8889	890.24.02
28	12		D8889	850.185.2
28	13		D8889	724.038.7
28	14		D8889	890.78.02
28	15		D8889	890.31.07
28	16		D8889	555.128.2
28	17		D8889	762.146.5
28	18		D8889	890.74.17
28	19		D8889	E860.343.5
28	20		D8889	E761.016.8
28	21		D8889	890.74.11
29	1		D8889	890.31.10
29	2		D8889	890.31.11
29	3		D8889	512.094.4
29	4		D8889	890.10.03
29	5		D8889	770.270.4
29	6		D8889	721.126.7
29	7		D8889	917.287.4
29	8		D8889	770.274.4
29	9		D8889	890.95.10
29	10		D8889	118.127.4
29	11		D8889	890.31.08
30	1		D8889	514.096.2
30	2		D8889	890.02.09
30	3		D8889	465.177.4
30	4		D8889	890.02.24
30	5		D8889	508.019.4
30	6		D8889	890.74.09
30	7		D8889	514.105.4
30	8		D8889	890.38.05
30	9		D8889	890.66.03
30	10		D8889	905.220.5
30	11		D8889	521.009.4
30	12		D8889	E722.074.8
30	13		D8889	714.014.8

FIGURE NO	ITEM NO	STOCK NUMBER	FSCM	PART NUMBER
30	14		D8889	415.153.4
30	15		D8889	807.011.4
30	16		D8889	905.214.5
30	17		D8889	890.08.01
30	18		D8889	514.097.2
31	1		D8889	547.206.1
31	2		D8889	890.31.11
31	3		D8889	890.31.29
31	4		D8889	547.070.2
32	1		D8889	751.103.4
32	2		D8889	890.31.28
32	3		D8889	890.08.02
32	4		D8889	890.95.08
32	5		D8889	890.66.04
32	6		D8889	911.004.4
32	7		D8889	890.59.51
32	8		D8889	738.293.4
32	9		D8889	453.002.4
32	10		D8889	890.38.07
32	11		D8889	890.10.07
32	12		D8889	727.055.4
32	13		D8889	770.122.4
32	14		D8889	890.31.28
32	15		D8889	890.08.02
32	16		D8889	522.019.4
33	1		D8889	890.38.03
33	2		D8889	890.10.03
33	3		D8889	928.093.4
33	4		D8889	537.015.1
33	5		D8889	515.353.2
33	6		D8889	890.74.04
33	7		D8889	971.496.5
33	8		D8889	850.195.4
33	9		D8889	731.230.8
33	10		D8889	771.003.4
33	11		D8889	921.026.4
33	12		D8889	850.197.4
33	13		D8889	770.290.4
33	14		D8889	616.070.4
33	15		D8889	890.28.32
33	16		D8889	514.104.2
33	17		D8889	890.37.26
33	18		D8889	890.37.20
33	19		D8889	890.10.05
33	19		D8889	890.10.05
33	20		D8889	522.022.4
33	21		D8889	890.38.07
33	22		D8889	890.54.02

FIGURE NO	ITEM NO	STOCK NUMBER	FSCM	PART NUMBER
33	23		D8889	770.288.4
33	24		D8889	651.051.4
33	25		D8889	890.11.03
33	26		D8889	890.36.95
33	27		D8889	890.67.05
33	28		D8889	415.156.4
33	29		D8889	633.053.5
33	30		D8889	633.054.5
34	1		D8889	421.069.4
34	2		D8889	890.31.10
34	3		D8889	424.021.4
34	4		D8889	770.277.4
34	5		D8889	423.022.4
34	6		D8889	850.011.4
34	7		D8889	421.070.4
35	1		D8889	890.28.66
35	2		D8889	427.043.4
35	3		D8889	427.044.4
35	4		D8889	890.77.06
35	5		D8889	890.74.48
35	6		D8889	426.032.4
35	7		D8889	927.022.4
35	8		D8889	426.031.4
35	9		D8889	861.104.2
35	10		D8889	805.092.4
35	11		D8889	531.009.4
35	12		D8889	E527.007.2
36	1		D8889	725.125.8
36	2		D8889	890.20.33
36	3		D8889	418.017.4
36	4		D8889	535.143.1
36	5		D8889	730.058.4
36	6		D8889	726.036.5
36	7		D8889	465.169.4
36	8		D8889	890.31.90
36	9		D8889	715.093.8
36	10		D8889	470.022.4
36	10		D8889	470.023.4
36	10		D8889	470.024.4
36	11		D8889	800.017.2
36	12		D8889	890.68.10
36	13		D8889	775.038.4
36	13		D8889	775.039.4
36	13		D8889	775.040.4
36	14		D8889	452.134.4
36	15		D8889	907.001.4
36	16		D8889	850.013.4
36	17		D8889	519.038.4

FIGURE NO	ITEM NO	STOCK NUMBER	FSCM	PART NUMBER
36	18		D8889	804.002.4
36	19		D8889	514.001.4
36	20		D8889	540.051.1
36	21		D8889	890.61.05
37	1		D8889	512.006.4
37	2		D8889	711.612.5
37	3		D8889	512.113.4
37	4		D8889	861.096.2
37	5		D8889	4658.006.4
37	6		D8889	890.28.03
38	1		76761	N1379
38	2		62502	96-9292
38	3		88044	AN565928-6
38	4		62502	96-9295
38	5	5310-00-641-9464	96906	MS27183-13
38	6	5310-00-637-9541	96906	MS35338-46
38	7	5305-00-115-9526	96906	MS90725-58
38	8		62502	96-9307
38	9	5305-00-071-2072	80204	MS90725-116
38	10	5310-00-584-5272	96906	MS35338-48
38	11	5310-00-809-5997	96906	MS27183-17
38	12		62502	96-9293
38	13		0VKD6	96-9249-090-HH
38	14		0VKD6	96-9247-5
38	15		D8889	415.079.4

APPENDIX H

TORQUE LIMITS

Section I. INTRODUCTION

H-1. Scope.

This appendix lists torque ratings for fasteners used on the APU. When torque values are called out in the maintenance procedures, those torques supersede the torques specified in this appendix. Table H-1 lists torque limits for standard fasteners installed dry. Table H-2 provides formulas for converting the dry torque values to wet. Table H-3 lists torque limits for standard metric fasteners installed dry.

Section II. TORQUE LIMITS

Table H-1. Torque Limits for Dry Fasteners

			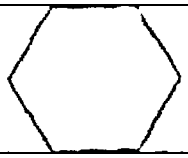		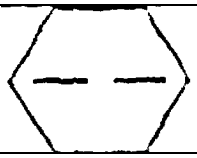		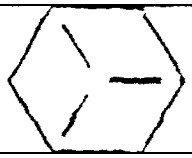	
SIZE			TORQUE					
			SAE GRADE 0-1-2		SAE GRADE 3		SAE GRADE 5	
Diameter in Inches	Threads Per Inch	Millimeters	Foot Pounds	Newton Meters	Foot Pounds	Newton Meters	Foot Pounds	Newton Meters
1/4	20	6.350	6	8	9	12	10	14
1/4	28	6.350	7	9	10	13	11	15
5/16	18	7 937	12	16	17	23	19	26
5/16	24	7 937	13	18	18	25	21	28
3/8	16	9.525	20	27	30	40	33	45
3/8	24	9 525	22	30	33	44	36	49
7/16	14	11.112	32	43	47	64	54	73
7/16	20	11.112	35	47	51	69	59	80
1/2	13	12.700	47	64	69	93	78	106
1/2	20	12.700	51	69	75	102	85	115
9/16	12	14.287	69	94	103	140	114	155
9/16	18	14.287	75	102	112	152	124	168
5/8	11	15.875	96	130	145	197	154	209
5/8	28	15.875	105	142	158	214	168	228
3/4	10	19.050	155	210	234	317	257	348
3/4	26	19.050	169	229	255	346	280	380
7/8	9	22.225	206	279	372	504	382	518
7/8	24	22.225	225	304	405	550	416	565
1	8	25.400	310	420	551	747	587	796
1	14	25.400	338	458	601	814	640	867

See Table H-2 for the effect of lubrication on torque.

Table H-1. Torque Limits for Dry Fasteners (continued)

SIZE			TORQUE					
			SAE GRADE 6		SAE GRADE 7		SAE GRADE 8	
Diameter in Inches	Threads Per Inch	Millimeters	Foot Pounds	Newton Meters	Foot Pounds	Newton Meters	Foot Pounds	Newton Meters
1/4	20	6.350	13	17	13	18	14	19
1/4	28	6.350	14	18	14	19	15	21
5/16	18	7.937	24	33	25	34	29	39
5/16	24	7.937	26	35	27	37	32	43
3/8	16	9.525	43	58	44	60	47	64
3/8	24	9.525	47	64	48	65	51	69
7/16	14	11.112	69	94	71	96	78	106
7/16	20	11.112	75	102	77	105	85	115
1/2	13	12.700	106	144	110	149	119	161
1/2	20	12.700	116	157	120	163	130	176
9/16	12	14.287	150	203	154	209	169	229
9/16	18	14.287	164	222	168	228	184	250
5/8	11	15.875	209	283	215	291	230	312
5/8	28	15.875	228	309	234	318	251	340
3/4	10	19.050	350	475	360	488	380	515
3/4	26	19.050	382	517	392	532	414	562
7/8	9	22.225	550	746	570	773	600	813
7/8	24	22.225	600	813	621	842	654	887
1	8	25.400	825	1119	840	1139	900	1220
1	14	25 400	899	1219	916	1241	981	1330

Table H-2. Effect of Lubrication on Torque

	TORQUE RATING IN FOOT-POUNDS	
Lubricant	5/16-18 Thread/Inch	1/2-13 Thread/Inch
NO LUBE. Steel	29	121
Plated and cleaned	19 (66%)	90 (26%)
SAE 20 Oil	18 (38%)	87 (28%)
SAE 40 Oil	17 (41%)	83 (31%)
Plated and SAE 30	16 (45%)	79 (35%)
White Grease	16 (45%)	79 (35%)
White Moly Film	14 (52%)	66 (45%)
Graphite and Oil	13 (55%)	62 (49%)

Use the above lubrication percentages to calculate the approximate decrease in torque rating for other bolt sizes.

Table H-3. Torque Limits for Dry Fasteners (Metric)

			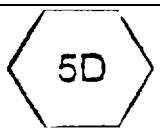				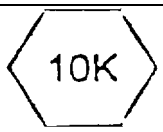			
			Standard 5D		Standard 8G		Standard 10K		Standard 12K	
Diameter in Millimeters	Coarse Thread Pitch	Inches	Ft-lb	Nm	Ft-lb	Nm	Ft-lb	Nm	Ft-lb	Nm
6	1.00	0.2362	5	7	6	8	8	11	10	14
8	1.00	0.3150	10	14	16	22	22	30	27	37
10	1.25	0.3937	19	26	31	42	40	54	49	66
12	1.25	0.4624	34	46	54	73	70	95	86	117
14	1.25	0.5512	55	75	89	121	117	159	137	186
16	2.00	0.6299	83	113	132	179	175	237	208	282
18	2.00	0.7087	111	150	182	247	236	320	283	384
22	2.50	0.8771	182	247	284	385	394	534	464	629
24	3.00	0.9449	261	354	419	568	570	773	689	934

To determine torque range for a fine thread bolt, increase the above coarse thread ratings by 9%. See Table H-2 for the effect of lubrication on torque.

APPENDIX I

MANDATORY REPLACEMENT PARTS

Section I. INTRODUCTION

I-1. Scope.

This appendix lists all mandatory replacement parts referenced in the maintenance tasks in this manual. These are items that must be replaced during maintenance whether they have failed or not. This includes items based on usage intervals such as time, operating hours, etc.

Section II. MANDATORY REPLACEMENT PARTS

Item No.	Part Number	National Stock Number	Nomenclature	Qty
1	33260		ELEMENT, SEPARATOR, FILTER	1
2	CA6306		FILTER, ENGINE AIR	1
3	541.038.2		FILTER, FUEL	1
4	853009-16		SEAL, WASHER	1
5	847.123.4		GASKET, MECHANICAL FUEL PUMP	2
6	770.292.4		GASKET, OIL FILL TUBE	1
7	770.269.4		GASKET, OIL COVER	1
8	850.185.2		SEAL, O-RING	1
9	770.270.4		GASKET, CAMSHAFT	1
10	770.288.4		GASKET, VALVE COVER	1
11	771.003.4		GASKET, CYLINDER HEAD	1
12	850.197.4		SEAL, O-RING, PUSH ROD TUBE	1
13	770.277.4		GASKET, TAPPET GUIDE	1
14	541.050.2E		FILTER, OIL	1

ALPHABETICAL INDEX

A

B

C

D

E

F

F cont.

G

H

I, J, K

L

L cont.

M

N

O

P, Q

R

S

T

U

V

W, X, Y, Z

RECOMMENDED CHANGES TO EQUIPMENT TECHNICAL

SOMETHING WRONG WITH THIS

THEN ... JOT DOWN THE ABOUT IT ON THIS CAREFULLY TEAR IT FOLD IT AND DROP IT IN MAIL

FROM: (PRINT YOUR UNIT'S COMPLETE
Commander
Stateside Army
ATTN: AMSTA-
Stateside, N.J. 07703-

DATE SENT
10 July 1975

PUBLICATION	PUBLICATION	PUBLICATION
TM 11-5840-340-14&P	23 Jan 74	Radar Set AN/PRC-

BE EXACT PIN-POINT WHERE IT

PAGE NO	PARA GRAPH	FIGURE NO	TABLE NO	IN THIS SPACE TELL WHAT IS WRONG AND WHAT SHOULD BE DONE ABOUT IT:
2-25	2-28			Recommend that the installation antenna procedure be changed throughout to specify a 20 antenna lag rather than REASON: Experience has shown that with only a 10 the antenna servo system is too sensitive to wind gusting excess of 25 knots, and has a tendency to rapidly and decelerate as it hunts, causing strain to the drive Hunting is minimized by adjusting the lag to 20 degradation of
3-10	3-3		3-1	Item 5, Functional column. Change "2 dB" to "3 REASON: The adjustment procedure for the TRANS FAULT indicator calls for a 3 dB (500 watts) adjustment to the TRANSPOWER FAULT
5-6	5-8			Add new step f.1 to read, "Replace cover plate removed step d. above." REASON: To replace the cover
		FO-3		Zone C 3. On J1-2, change "+24 VDC" to "+5 REASON: This is the output line of the 5 VDC power +24 VDC is the input

PRINTED NAME, GRADE OR TITLE AND TELEPHONE

SSG I. M. DeSpiritof 999-1776

SIGN HERE

DA FORM 1 JUL 79 2028-2 PREVIOUS ARE

P.S. - IF YOUR OUTFIT WANTS TO KNOW ABOUT RECOMMENDATION MAKE A CARBON COPY OF AND GIVE IT TO YOUR

TEAR ALONG DO

REVERSE OF DA FORM 2028-2

FILL IN YOUR
UNIT'S ADDRESS

FOLD BACK

DEPARTMENT OF THE ARMY

OFFICIAL BUSINESS

PLEASE
AFFIX
STAMP
POSTAGE
REQUIRED

Commander
U.S. Army Communications-Electronics Command
and Fort Monmouth
ATTN: AMSEL-IM-LEO-D-CS-CFO
Fort Monmouth, New Jersey 07703-5000

TEAR ALONG DOTTED LINE

RECOMMENDED CHANGES TO EQUIPMENT TECHNICAL PUBLICATIONS

SOMETHING WRONG WITH THIS PUBLICATION

THEN ... JOT DOWN THE INFO ABOUT IT ON THIS FORM. CAREFULLY TEAR IT OUT. FOLD IT AND DROP IT IN THE MAIL.

FROM: (PRINT YOUR UNIT'S COMPLETE ADDRESS)

DATE SENT

PUBLICATION NUMBER	PUBLICATION DATE	PUBLICATION TITLE

BE EXACT PIN-POINT WHERE IT IS				IN THIS SPACE TELL WHAT IS WRONG AND WHAT SHOULD BE DONE ABOUT IT:
PAGE NO	PARA GRAPH	FIGURE NO	TABLE NO	

PRINTED NAME, GRADE OR TITLE AND TELEPHONE NUMBER	SIGN HERE

TEAR ALONG DOTTED LINE

DA FORM 1 JUL 79 **2028-2**

PREVIOUS EDITIONS ARE OBSOLETE

P.S. - IF YOUR OUTFIT WANTS TO KNOW ABOUT YOUR RECOMMENDATION MAKE A CARBON COPY OF THIS AND GIVE IT TO YOUR HEADQUARTERS.

REVERSE OF DA FORM 2028-2

FILL IN YOUR
UNIT'S ADDRESS

FOLD BACK

DEPARTMENT OF THE ARMY

OFFICIAL BUSINESS

PLEASE
AFFIX
STAMP
POSTAGE
REQUIRED

Commander
U.S. Army Communications-Electronics Command
and Fort Monmouth
ATTN: AMSEL-LC-LEO-D-CS-CFO
Fort Monmouth, New Jersey 07703-5000

TEAR ALONG DOTTED LINE

By Order of the Secretary of the Army:

ERIC K. SHINSEKI
General, United States Army
Chief of Staff

Official:

JOEL B. HUDSON
Administrative Assistant to the
Secretary of the Army
0027302

DISTRIBUTION:

To be distributed in accordance with the initial distribution number (IDN) 256642 requirements for TM 9-6115-664-13&P.

Connectors used on Main and Engine Harnesses. View from cable ends

TYP, 2PLCS
A1J7, A2J10

A2J12

A3J2

J11

Ear shows Pin 1

Raised Dot on rear of 3-Pin shows Pin 1

Connectors used on Main, Remote and Preheat Subassemblies. View outside of subassembly.

TYP, 2PLCS
A1P1, A2P10

A2P12

A3P1

SOLENOID

Ear shows Pin 1

LOCAL-REMOTE INTERFACE
MIL-C-5015 PLUG, LOCAL END

A1P3

A B C D
E F G H J
K L M N P Q
R S T U V
W X Y Z

LOCAL CONTROL PANEL
MIL-C-5015 REMOTE INTER-FACE CONNECTOR

A1J2

D C B A
J H G F E
Q P N M L K
V U T S R
Z Y X W

LOCAL-REMOTE INTERFACE
CABLE PLUG, REMOTE END

A4P4

1 2
3 4 5 6
7 8 9 10
11 12 13 14
15 16

REMOTE CONTROL PANEL
CPC INTERFACE CONNECTOR

A4J1

2 1
6 5 4 3
10 9 8 7
14 13 12 11
16 15

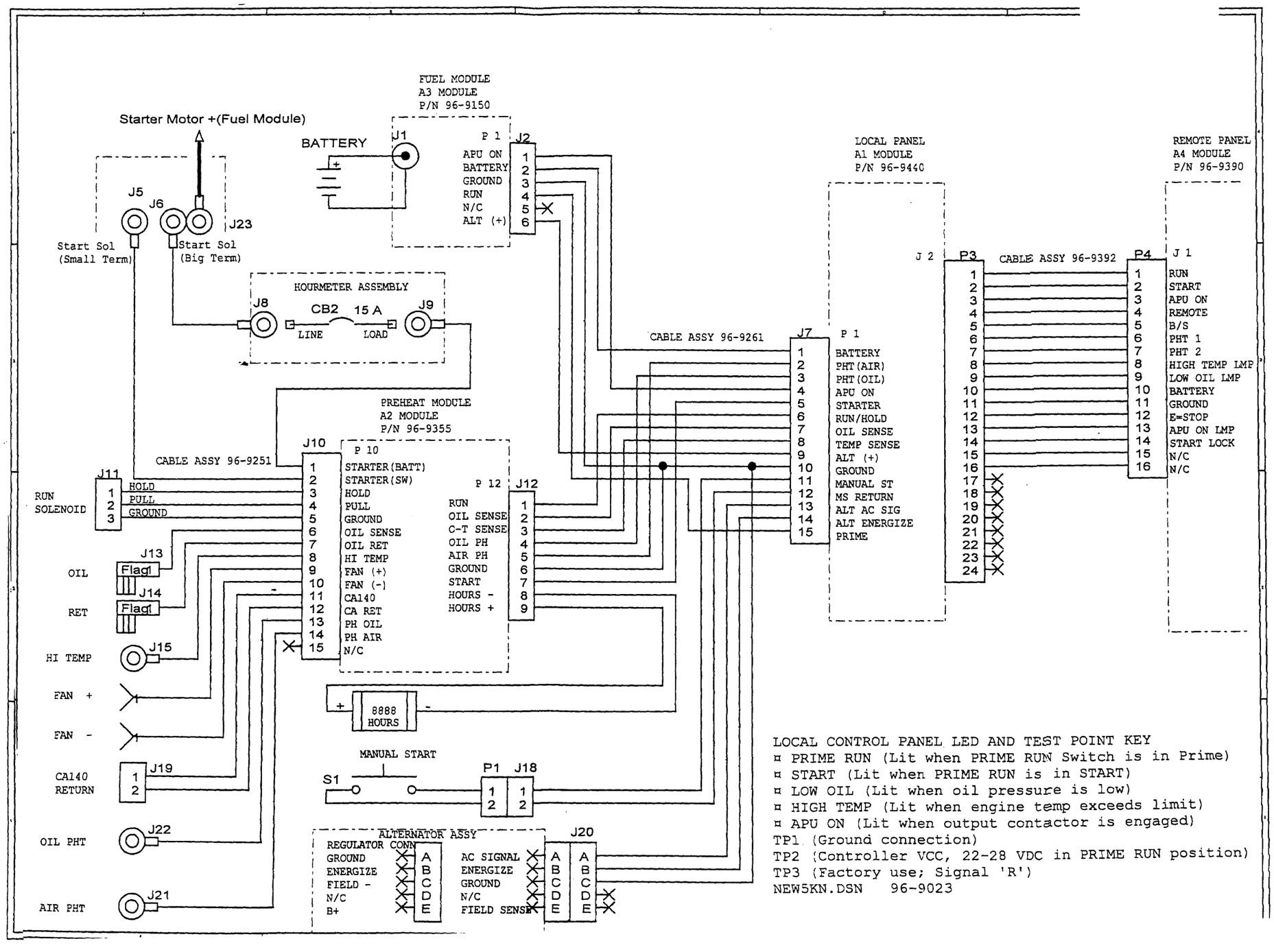
FUEL MODULE
A3 MODULE
P/N 96-9150
Starter Motor +(Fuel Module)
BATTERY
J1
P 1
J2
APU ON
BATTERY
GROUND
RUN
N/C
ALT (+)
J5
J6
J23
Start Sol
(Small Term)
Start Sol
(Big Term)
HOURMETER ASSEMBLY
J8
CB2
15 A
J9
LINE
LOAD
PREHEAT MODULE
A2 MODULE
P/N 96-9355
J10
P 10
CABLE ASSY 96-9251
STARTER(BATT)
STARTER(SW)
HOLD
PULL
GROUND
OIL SENSE
OIL RET
HI TEMP
FAN (+)
FAN (-)
CA140
CA RET
PH OIL
PH AIR
N/C
P 12
J12
RUN
OIL SENSE
C-T SENSE
OIL PH
AIR PH
GROUND
START
HOURS -
HOURS +
J11
RUN
SOLENOID
HOLD
PULL
GROUND
J13
OIL
Flag1
J14
RET
Flag1
J15
HI TEMP
FAN +
FAN -
J19
CA140
RETURN
J22
OIL PHT
J21
AIR PHT
8888
HOURS
MANUAL START
S1
P1
J18
ALTERNATOR ASSY
REGULATOR CONN
GROUND
ENERGIZE
FIELD -
N/C
B+
AC SIGNAL
ENERGIZE
GROUND
N/C
FIELD SENSE
J20
LOCAL PANEL
A1 MODULE
P/N 96-9440
J 2
CABLE ASSY 96-9261
J7
P 1
BATTERY
PHT(AIR)
PHT(OIL)
APU ON
STARTER
RUN/HOLD
OIL SENSE
TEMP SENSE
ALT (+)
GROUND
MANUAL ST
MS RETURN
ALT AC SIG
ALT ENERGIZE
PRIME
P3
CABLE ASSY 96-9392
P4
REMOTE PANEL
A4 MODULE
P/N 96-9390
J 1
RUN
START
APU ON
REMOTE
B/S
PHT 1
PHT 2
HIGH TEMP LMP
LOW OIL LMP
BATTERY
GROUND
E-STOP
APU ON LMP
START LOCK
N/C
N/C
LOCAL CONTROL PANEL LED AND TEST POINT KEY
¤ PRIME RUN (Lit when PRIME RUN Switch is in Prime)
¤ START (Lit when PRIME RUN is in START)
¤ LOW OIL (Lit when oil pressure is low)
¤ HIGH TEMP (Lit when engine temp exceeds limit)
¤ APU ON (Lit when output contactor is engaged)
TP1 (Ground connection)
TP2 (Controller VCC, 22-28 VDC in PRIME RUN position)
TP3 (Factory use; Signal 'R')
NEW5KN.DSN 96-9023

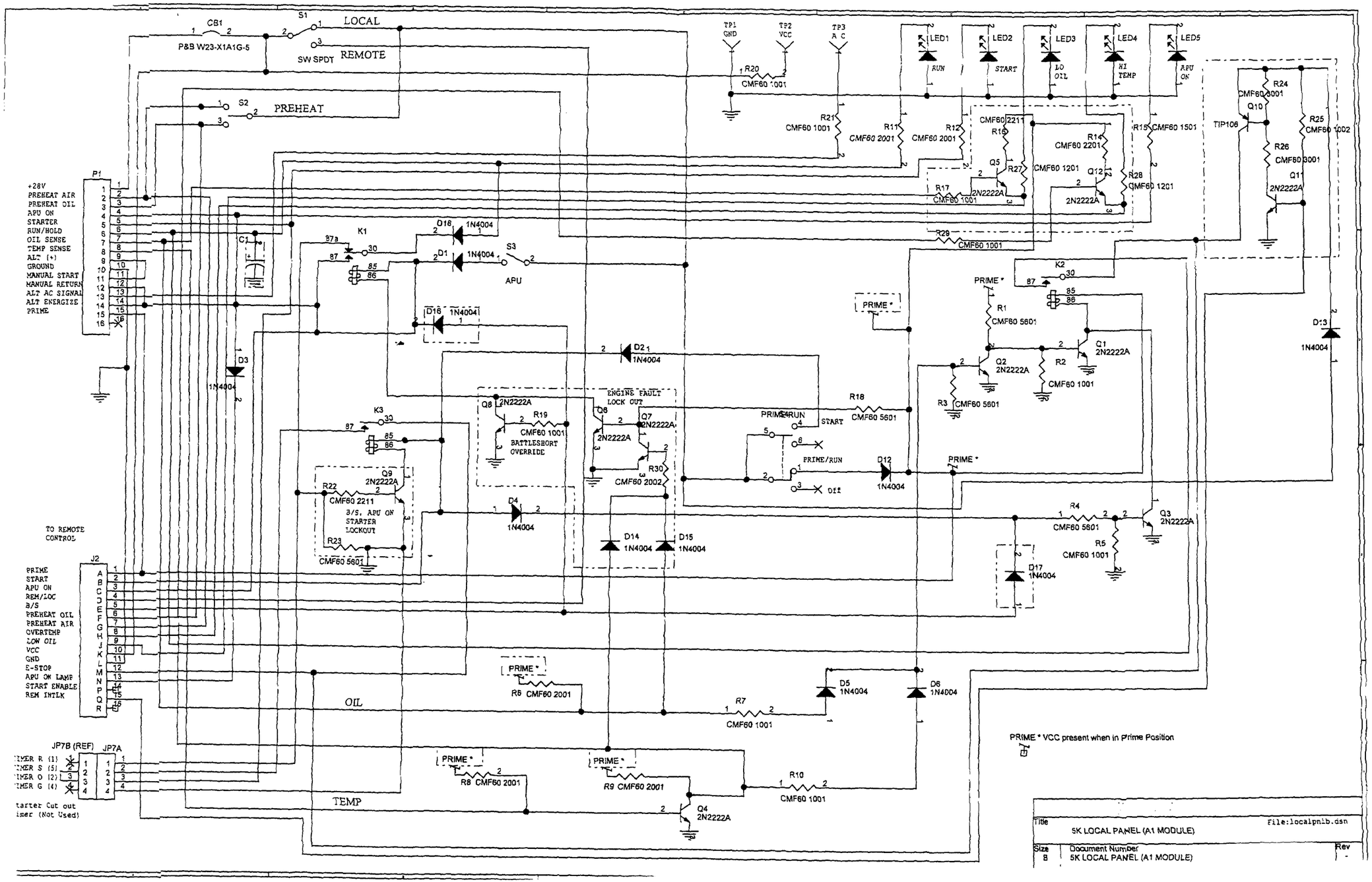
CB1
P&B W23-X1A1G-5
S1
LOCAL
SW SPDT
REMOTE
S2
PREHEAT
TP1 GND
TP2 VCC
TP3 A C
R20 CMF60 1001
LED1 RUN
LED2 START
LED3 LO OIL
LED4 HI TEMP
LED5 APU ON
R21 CMF60 1001
R11 CMF60 2001
R12 CMF60 2001
R13 CMF60 2211
R14 CMF60 2201
R15 CMF60 1501
R16 CMF60 1201
R17 CMF60 1001
R24 CMF60 3001
R25 CMF60 1002
R26 CMF60 3001
TIP106
Q10
Q11 2N2222A
Q5 2N2222A
Q12 2N2222A
R29 CMF60 1001
P1
+28V
PREHEAT AIR
PREHEAT OIL
APU ON
STARTER
RUN/HOLD
OIL SENSE
TEMP SENSE
ALT (+)
GROUND
MANUAL START
MANUAL RETURN
ALT AC SIGNAL
ALT ENERGIZE
PRIME
K1
87a
87
30
85
86
C1
D16 1N4004
D1 1N4004
S3
APU
D3 1N4004
D2 1N4004
K2
PRIME *
R1 CMF60 5601
Q1 2N2222A
Q2 2N2222A
R2 CMF60 1001
R3 CMF60 5601
D13 1N4004
ENGINE FAULT LOCK OUT
Q8 2N2222A
R19 CMF60 1001
BATTLESHORT OVERRIDE
Q6 2N2222A
Q7 2N2222A
R30 CMF60 2002
R18 CMF60 5601
PRIME/RUN
START
OFF
D12 1N4004
K3
Q9 2N2222A
R22 CMF60 2211
B/S, APU ON STARTER LOCKOUT
R23 CMF60 5601
D4 1N4004
D14 1N4004
D15 1N4004
R4 CMF60 5601
R5 CMF60 1001
Q3 2N2222A
D17 1N4004
TO REMOTE CONTROL
J2
PRIME
START
APU ON
REM/LOC
B/S
PREHEAT OIL
PREHEAT AIR
OVERTEMP
LOW OIL
VCC
GND
E-STOP
APU ON LAMP
START ENABLE
REM INTLK
R6 CMF60 2001
OIL
R7 CMF60 1001
D5 1N4004
D6 1N4004
JP7B (REF)
JP7A
TIMER R (1)
TIMER S (5)
TIMER O (2)
TIMER G (4)
Starter Cut out Timer (Not Used)
R8 CMF60 2001
R9 CMF60 2001
TEMP
Q4 2N2222A
R10 CMF60 1001
PRIME * VCC present when in Prime Position
Title
5K LOCAL PANEL (A1 MODULE)
File:localpnlb.dsn
Size B
Document Number
5K LOCAL PANEL (A1 MODULE)
Rev -

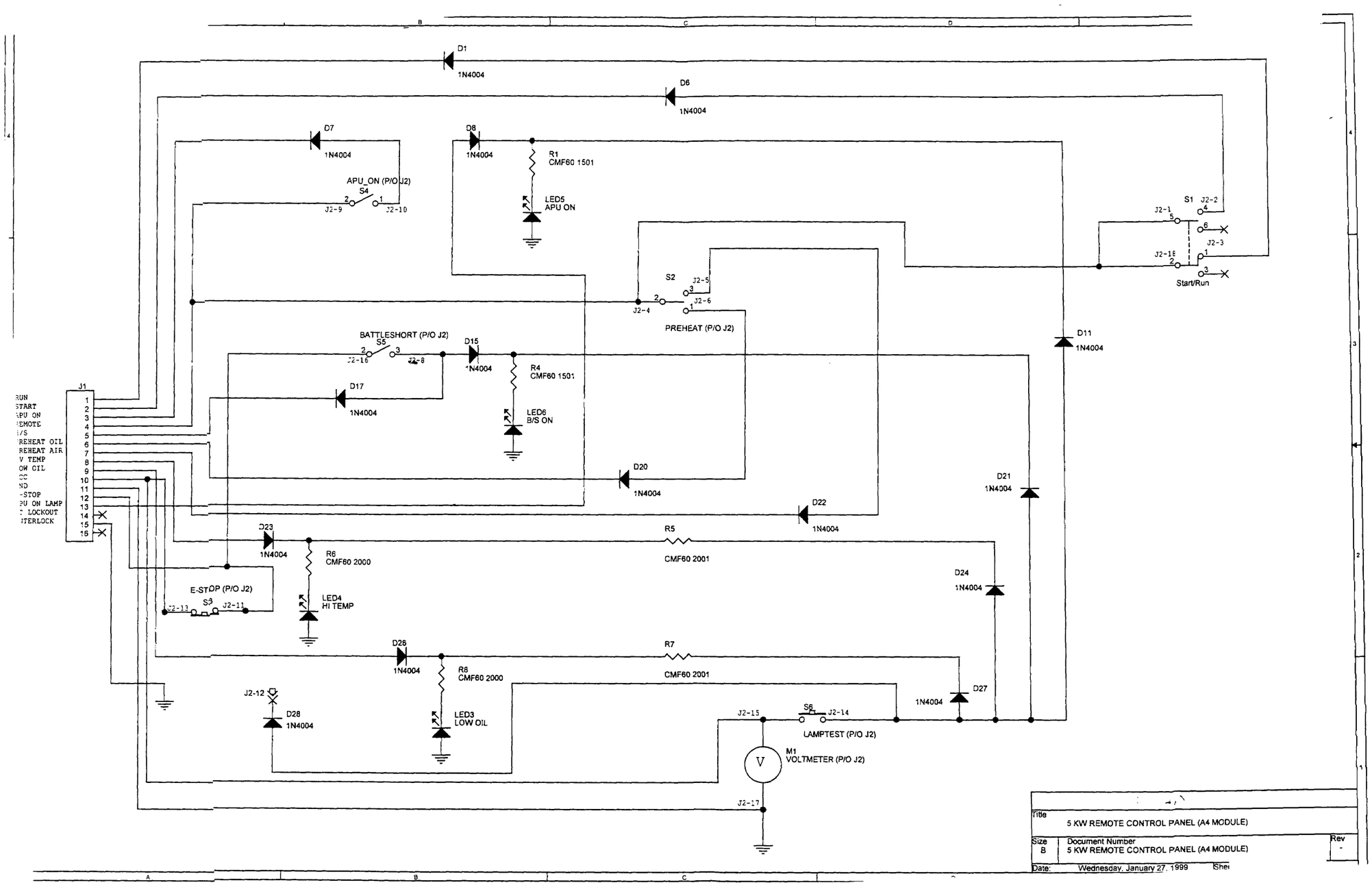
D1
1N4004
D6
1N4004
D7
1N4004
D8
1N4004
R1
CMF60 1501
LED5
APU ON
APU_ON (P/O J2)
S4
J2-9
J2-10
S1
J2-1
J2-2
J2-3
J2-18
Start/Run
S2
J2-5
J2-6
J2-4
PREHEAT (P/O J2)
BATTLESHORT (P/O J2)
S5
J2-16
J2-8
D15
1N4004
R4
CMF60 1501
D17
1N4004
LED6
B/S ON
D11
1N4004
D20
1N4004
D21
1N4004
D22
1N4004
J1
RUN
START
APU ON
REMOTE
B/S
REHEAT OIL
REHEAT AIR
V TEMP
OW OIL
CC
ND
-STOP
PU ON LAMP
T LOCKOUT
TERLOCK
D23
1N4004
R6
CMF60 2000
R5
CMF60 2001
D24
1N4004
E-STOP (P/O J2)
S3
J2-13
J2-11
LED4
HI TEMP
D26
1N4004
R8
CMF60 2000
R7
CMF60 2001
D27
1N4004
J2-12
D28
1N4004
LED3
LOW OIL
J2-15
S6
J2-14
LAMPTEST (P/O J2)
M1
VOLTMETER (P/O J2)
V
J2-17
Title
5 KW REMOTE CONTROL PANEL (A4 MODULE)
Size
B
Document Number
5 KW REMOTE CONTROL PANEL (A4 MODULE)
Rev
-
Date:
Wednesday, January 27, 1999

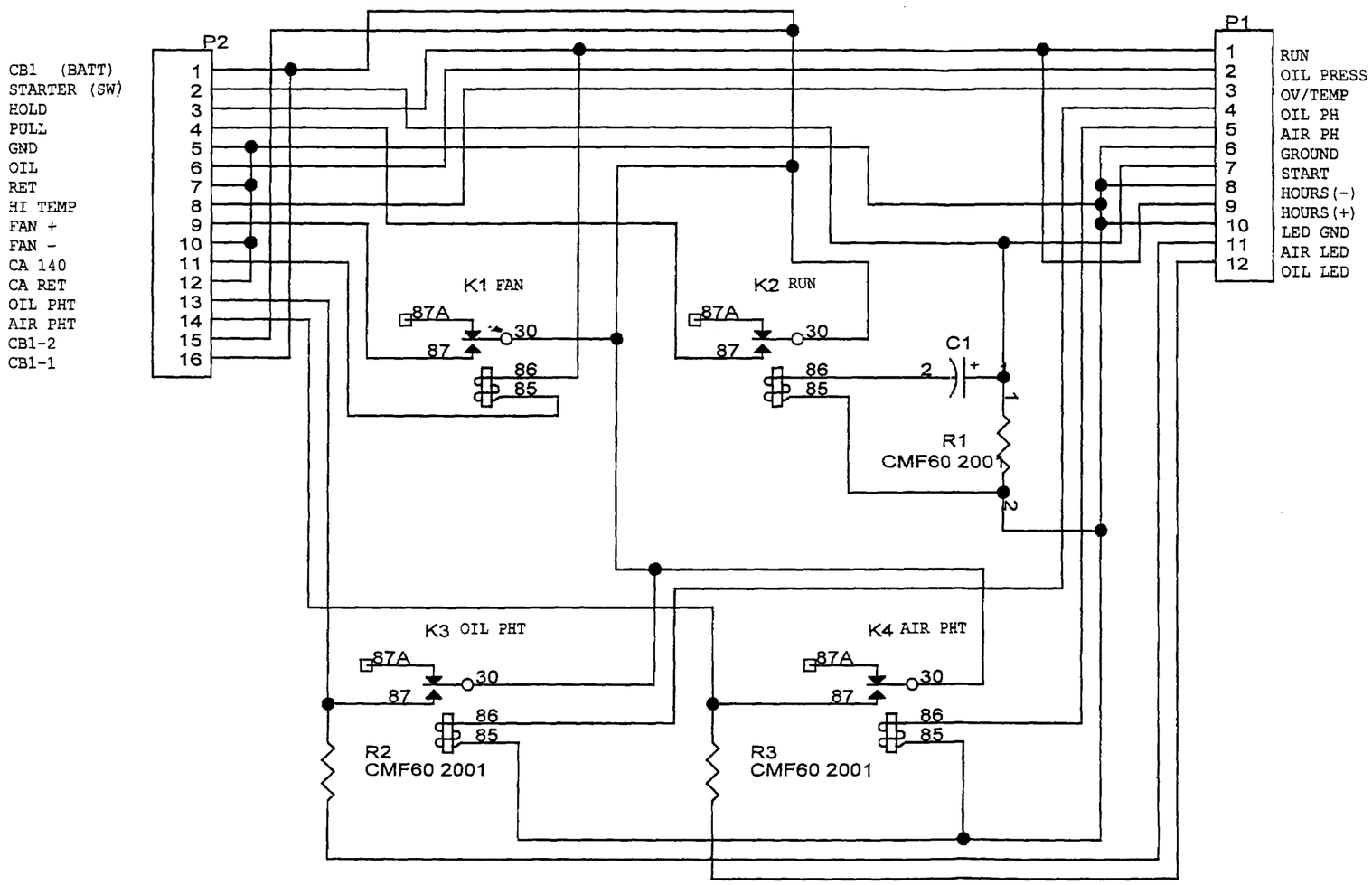

MENLO PARK, CA 94025
3639 HAVEN AVE
GOODMAN BALL, INC

Title	PREHEAT PWA (A2A1 MODULE)	
Size A	Document Number {Doc}	Rev A
Date: Wednesday, January 27, 1999	Sheet 1 of 1	

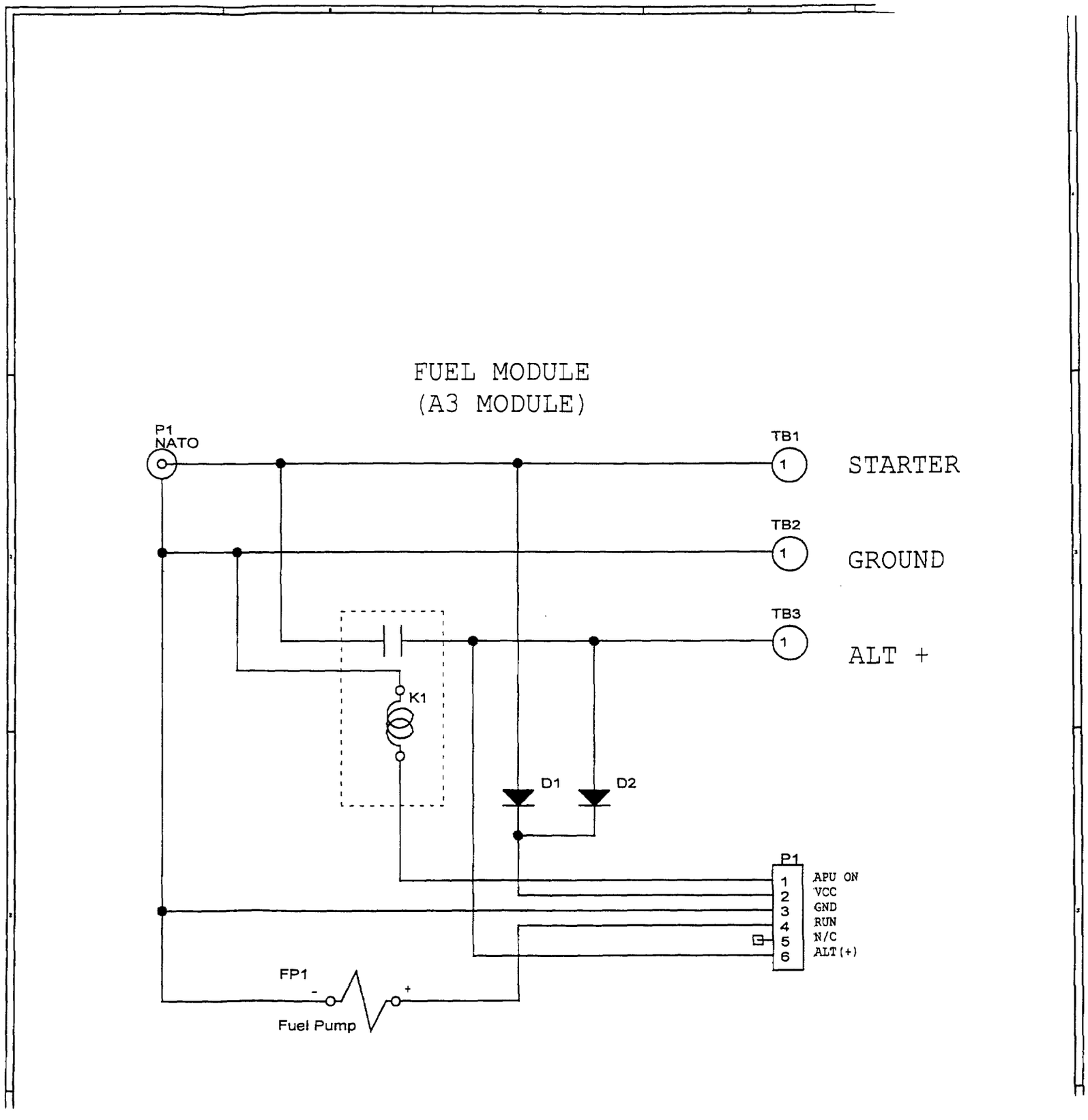
FUEL MODULE
(A3 MODULE)
P1
NATO
TB1
1
STARTER
TB2
1
GROUND
TB3
1
ALT +
K1
D1
D2
P1
1
2
3
4
5
6
APU ON
VCC
GND
RUN
N/C
ALT(+)
FP1
-
+
Fuel Pump

This fine document...

Was brought to you by me:

Liberated Manuals -- free army and government manuals

Why do I do it? I am tired of sleazy CD-ROM sellers, who take publicly available information, slap “watermarks” and other junk on it, and sell it. Those masters of search engine manipulation make sure that their sites that sell free information, come up first in search engines. They did not create it... They did not even scan it... Why should they get your money? Why are not letting you give those free manuals to your friends?

I am setting this document FREE. This document was made by the US Government and is NOT protected by Copyright. Feel free to share, republish, sell and so on.

I am not asking you for donations, fees or handouts. If you can, please provide a link to liberatedmanuals.com, so that free manuals come up first in search engines:

<A HREF=http://www.liberatedmanuals.com/>Free Military and Government Manuals</A>

- Sincerely
  Igor Chudov
  http://igor.chudov.com/